METROPOLITAN COUNCIL

SOUTHWEST
Green Line LRT Extension

CIVIL CONSTRUCTION

VOLUME 11E
STATIONS

PLAN PACKAGE INDEX / DESCRIPTION	
CIVIL CONSTRUCTION	BID ALTERNATES
VOLUME 1 - EXISTING CONDITIONS & REMOVALS	VOLUME A - NOT USED
VOLUME 2A - CIVIL	VOLUME B - NOT USED
VOLUME 2B - CIVIL	VOLUME C - BID ALTERNATE 3 (LRCI 5) ▲
VOLUME 3A - TRACKWORK	VOLUME D - BID ALTERNATE 4 (LRCI 6) ▲
VOLUME 3B - TRACKWORK	VOLUME E - BID ALTERNATE 5 (LRCI 7) ▲
VOLUME 3C - TRACKWORK DETAILS	VOLUME F - BID ALTERNATE 6 (LRCI 8) ▲
VOLUME 4A - BRIDGES	VOLUME G - BID ALTERNATE 7 (LRCI 4) ▲
VOLUME 4B - BRIDGES	VOLUME H - BID ALTERNATE 8 (LRCI 10) ▲
VOLUME 4C - BRIDGES	VOLUME I - BID ALTERNATE 9 (LRCI 11) ▲
VOLUME 4D - BRIDGES	VOLUME J - BID ALTERNATE 10 (LRCI 12)
VOLUME 4E - BRIDGES	VOLUME K - BID ALTERNATE 11 (LRCI 13)
VOLUME 4F - BRIDGES	VOLUME L - BID ALTERNATE 12 (LRCI 14)
VOLUME 4G - BRIDGES	VOLUME M - BID ALTERNATE 13 (LRCI 26)
VOLUME 5 - TUNNELS	VOLUME N - BID ALTERNATE 14 (LRCI 27)
VOLUME 6 - RETAINING WALLS	VOLUME O - BID ALTERNATE 15 (LRCI 17)
VOLUME 7 - UTILITIES	VOLUME P - BID ALTERNATE 20 (LRCI 32)
VOLUME 8 - DRAINAGE	VOLUME Q - BID ALTERNATE 21 (LRCI 33)
VOLUME 9 - URBAN DESIGN / LANDSCAPE	
VOLUME 10A - TRAFFIC	
VOLUME 10B - LIGHTING *	
VOLUME 11A - STATIONS ▲	
VOLUME 11B - STATIONS	
VOLUME 11C - STATIONS	
VOLUME 11D - STATIONS	
VOLUME 11E - STATIONS	
VOLUME 12 - SYSTEMS	

* TO BE SUBMITTED AT A LATER DATE
▲ SUBMITTED AT 75%, NOT INCLUDED IN 90%

THE PROPOSED SOUTHWEST LRT PROJECT IS NOT FINAL BUT IS STILL UNDER ENVIRONMENTAL REVIEW AND THE PROJECT IS SUBJECT TO CHANGE. THESE PLANS ARE NOT FINAL.

THE COUNCIL, THROUGH THE DEVELOPMENT OF THESE PLANS, DOES NOT INTEND THAT THEY WILL PREJUDICE OR COMPROMISE ANY STATE OR FEDERAL ENVIRONMENTAL REVIEW OR OTHER LEGAL REQUIREMENTS. THESE PLANS DO NOT LIMIT THE PROJECT DESIGN ALTERNATIVES OR MITIGATIVE MEASURES THAT THE COUNCIL MAY UNDERTAKE IF THE PROPOSED SWLRT PROJECT PROCEEDS TO CONSTRUCTION.

THE COUNCIL WILL NOT TAKE FINAL ACTION ON THIS MATTER UNLESS THE COUNCIL PROCEEDS WITH THE PROJECT AFTER THE FTA'S RECORD OF DECISION AND THE COUNCIL'S DETERMINATION OF ADEQUACY.

WARNING: THIS RECORD MAY CONTAIN SENSITIVE SECURITY INFORMATION THAT IS CONTROLLED UNDER 49 CFR PARTS 15 AND 1520. NO PART OF THIS RECORD MAY BE DISCLOSED TO PERSONS WITHOUT A "NEED TO KNOW", AS DEFINED IN 49 CFR PARTS 15 AND 1520, EXCEPT WITH THE WRITTEN PERMISSION OF THE ADMINISTRATOR OF THE TRANSPORTATION SECURITY ADMINISTRATION OR THE SECRETARY OF TRANSPORTATION. UNAUTHORIZED RELEASE MAY RESULT IN CIVIL PENALTY OR OTHER ACTION. FOR U.S. GOVERNMENT AGENCIES, PUBLIC DISCLOSURE IS GOVERNED BY 5 U.S.C. 552 AND 49 CFR PARTS 15 AND 1520.

90% SUBMISSION
DATE : 01/22/16

AECOM

CIVIL CONSTRUCTION

SHT #	SHEET NAME	SHEET DESCRIPTION	STATION	STATION	REV
		VOLUME 11E - STATIONS			
1	00-GEN-CVR-001	COVER SHEET			
2	00-GEN-IDX-001	VOLUME INDEX OF PLAN SHEETS			
3	W0-GEN-KEY-001	GENERAL KEY MAP SHEET 1			
4	E0-GEN-KEY-002	GENERAL KEY MAP SHEET 2			
5	00-GEN-NTS-001	GENERAL NOTES, ABBREVIATIONS, AND SYMBOLS SHEET 1			
6	00-GEN-NTS-002	GENERAL NOTES, ABBREVIATIONS, AND SYMBOLS SHEET 2			
7	-	NOT USED			
8	D0-ARC-ABR-020	ARCHITECTURAL ABBREVIATIONS, SYMBOLS, AND DRAWING CODES			
9	D0-PLM-GEN-001	PLUMBING SYMBOLS AND ABBREVIATIONS			
10	D0-MEC-GEN-001	MECHANICAL SYMBOLS AND ABBREVIATIONS			
11	D0-ELE-GEN-001	ELECTRICAL SYMBOLS AND ABBREVIATIONS 1 OF 2			
12	D0-ELE-GEN-002	ELECTRICAL SYMBOLS AND ABBREVIATIONS 2 OF 2			
		ARCHITECTURAL DETAILS			
13	D0-ARC-DTL-140	ENLARGED PLANS			
14	D0-ARC-DTL-141	ENLARGED PLANS			
15	D0-ARC-DTL-142	ENLARGED PLANS			
16	D0-ARC-DTL-450	LIGHT POLE DETAILS			
17	D0-ARC-DTL-480	RAMP DETAILS			
18	D0-ARC-DTL-481	RAMP DETAILS			
19	D0-ARC-DTL-482	RAMP DETAILS			
20	D0-ARC-DTL-483	RAMP DETAILS			
21	D0-ARC-DTL-484	RAMP DETAILS			
22	D0-ARC-DTL-490	CROSSING DETAILS			
23	D0-ARC-DTL-491	CROSSING DETAILS			
24	D0-ARC-DTL-500	PLAN DETAILS - WINDSCREEN FRAMING			
25	D0-ARC-DTL-510	VC PLAN DETAILS			
26	D0-ARC-DTL-520	SECTION DETAILS - PLATFORM			
27	D0-ARC-DTL-521	SECTION DETAILS - PLATFORM WALL			
28	D0-ARC-DTL-522	SECTION DETAILS - PLATFORM			
29	D0-ARC-DTL-523	SECTION DETAILS - PLATFORM WALL			
30	D0-ARC-DTL-524	SECTION DETAILS - ETEL/ HANDHOLE			
31	D0-ARC-DTL-525	BENCH/LEANING RAIL DETAILS			
32	D0-ARC-DTL-527	CANOPY DETAILS			
33	D0-ARC-DTL-528	CANOPY DETAILS			
34	D0-ARC-DTL-529	CANOPY DETAILS			
35	D0-ARC-DTL-530	VC SECTION DETAILS			
36	D0-ARC-DTL-531	VC SECTION DETAILS			
37	D0-ARC-DTL-532	VC SECTION DETAILS			
38	D0-ARC-DTL-533	VC SECTION DETAILS			
39	D0-ARC-DTL-534	VC SECTION DETAILS			
40	D0-ARC-DTL-535	VC SECTION DETAILS			
41	D0-ARC-DTL-536	VC SECTION DETAILS			
42	D0-ARC-DTL-537	VC SECTION DETAILS			
43	D0-ARC-DTL-538	VC SECTION DETAILS			
44	D0-ARC-DTL-539	VC SECTION DETAILS			
45	D0-ARC-DTL-540	VC SECTION DETAILS			
46	D0-ARC-DTL-541	VC SECTION DETAILS			
47	D0-ARC-DTL-542	VC SECTION DETAILS			
48	D0-ARC-DTL-543	PRECAST WALL DETAILS			
49	D0-ARC-DTL-550	VC LOBBY WALL DETAILS			
50	D0-ARC-DTL-551	VC LOBBY / HOISTWAY WALL DETAILS			
51	D0-ARC-DTL-570	ROOF DETAILS			
52	D0-ARC-DTL-572	ROOF DETAILS			
53	D0-ARC-DTL-573	ROOF DETAILS			
54	D0-ARC-DTL-574	ROOF DETAILS			
55	D0-ARC-DTL-580	CONSTRUCTION TYPES			
56	D0-ARC-DTL-581	CONSTRUCTION TYPES			
57	D0-ARC-DTL-585	WALL TYPES			
58	D0-ARC-DTL-590	WINDOW TYPES AND DETAILS			
59	D0-ARC-DTL-591	WINDOW TYPES AND DETAILS			
60	D0-ARC-DTL-595	PB STOREFRONT DETAILS			
61	D0-ARC-DTL-596	PB STOREFRONT DETAILS			
62	D0-ARC-DTL-600	VC CURTAINWALL DETAILS			
63	D0-ARC-DTL-650	VC MESH DETAILS			
64	D0-ARC-DTL-651	VC MESH DETAILS			
65	D0-ARC-DTL-660	VC MESH DETAILS - GATES			
66	D0-ARC-DTL-700	ELEVATOR CAB PLANS			
67	D0-ARC-DTL-701	ELEVATOR CAB ELEVATIONS AND DETAILS			

CIVIL CONSTRUCTION

SHT #	SHEET NAME	SHEET DESCRIPTION	STATION	STATION	REV
68	D0-ARC-DTL-710	STAIR DETAILS			
69	D0-ARC-SGN-801	SIGNAGE DETAILS AND NOTES			
70	D0-ARC-SGN-802	SIGNAGE DETAILS AND NOTES			
71	D0-ARC-SGN-803	SIGNAGE DETAILS AND NOTES			
72	D0-ARC-SGN-804	SIGNAGE DETAILS AND NOTES			
73	D0-ARC-DTL-901	BUS OPERATOR RESTROOM COMMON DETAILS			
74	D0-ARC-DTL-902	BUS OPERATOR RESTROOM DOWNTOWN HOPKINS DETAILS			
		STRUCTURAL DETAILS			
75	D0-STR-DTL-401	CONCRETE SECTIONS AND DETAILS			
76	D0-STR-DTL-402	CONCRETE SECTIONS AND DETAILS			
77	D0-STR-DTL-403	CONCRETE SECTIONS AND DETAILS			
78	D0-STR-DTL-404	CONCRETE SECTIONS AND DETAILS			
79	D0-STR-DTL-410	CONCRETE SECTIONS AND DETAILS			
80	D0-STR-DTL-411	CONCRETE SECTIONS AND DETAILS			
81	D0-STR-DTL-412	CONCRETE SECTIONS AND DETAILS			
82	D0-STR-DTL-413	CONCRETE SECTIONS AND DETAILS			
83	D0-STR-DTL-414	CONCRETE SECTIONS AND DETAILS			
84	D0-STR-DTL-415	CONCRETE SECTIONS AND DETAILS			
85	D0-STR-DTL-500	STEEL SECTIONS AND DETAILS			
86	D0-STR-DTL-501	STEEL SECTIONS AND DETAILS			
87	D0-STR-DTL-502	STEEL SECTIONS AND DETAILS			
88	D0-STR-DTL-503	STEEL SECTIONS AND DETAILS			
89	D0-STR-DTL-601	VC TYPICAL FOUNDATION DETAILS			
90	D0-STR-DTL-602	VC TYPICAL FOUNDATION DETAILS			
91	D0-STR-DTL-603	VC TYPICAL FOUNDATION DETAILS			
92	D0-STR-DTL-604	VC TYPICAL SLAB ON GRADE DETAILS			
93	D0-STR-DTL-605	VC TYPICAL STEEL CONNECTION DETAILS			
94	D0-STR-DTL-606	VC TYPICAL STEEL CONNECTION DETAILS			
95	D0-STR-DTL-607	VC TYPICAL DETAILS			
96	D0-STR-DTL-608	VC TYPICAL DETAILS			
97	D0-STR-DTL-609	VC TYPICAL DETAILS			
98	-	NOT USED			
99	-	NOT USED			
100	D0-STR-DTL-612	VC TYPICAL DETAILS			
101	D0-STR-DTL-613	VC TYPICAL DETAILS			
102	D0-STR-DTL-614	VC TYPICAL DETAILS			
		PLUMBING DETAILS			
103	D0-PLM-DTL-001	STATIONS COMMON DETAILS PLUMBING DETAILS			
104	D0-PLM-DTL-002	STATIONS COMMON DETAILS PLUMBING DETAILS			
		MECHANICAL DETAILS			
105	D0-MEC-DTL-001	STATIONS COMMON DETAILS HVAC DETAILS			
106	D0-MEC-DTL-002	STATIONS COMMON DETAILS HVAC DETAILS			
		ELECTRICAL DETAILS			
107	D0-ELE-SCH-501	STATIONS COMMON DETAILS ELECTRICAL LUMINAIRE SCHEDULE			
108	D0-ELE-DTL-603	STATIONS COMMON DETAILS ELECTRICAL DETAILS 1 OF 4			
109	D0-ELE-DTL-604	STATIONS COMMON DETAILS ELECTRICAL DETAILS 2 OF 4			
110	D0-ELE-DTL-605	STATIONS ELECTRICAL DETAILS ELECTRICAL DETAILS 3 OF 4			
111	D0-ELE-DTL-606	STATIONS COMMON DETAILS ELECTRICAL DETAILS 4 OF 4			

CIVIL CONSTRUCTION

SHT #	SHEET NAME	SHEET DESCRIPTION	STATION	STATION	REV

NO.	DATE	BY	CHECK	DESIGN	REVISION / SUBMITTAL

AECOM

90% SUBMISSION - 01/22/16

METROPOLITAN COUNCIL

SOUTHWEST Green Line LRT Extension

CIVIL - VOLUME 11E
GENERAL
VOLUME INDEX OF PLAN SHEETS

DISCIPLINE: GENERAL

SHEET NAME: 00-GEN-IDX-001

SHEET 2 OF 111

Jan, 21 2016 07:31 pm V:\3400_ADC\CAD\CAD MANAGEMENT\DRAWING LIST\COVER SHEETS 90%\90% GEN-IDX_VOL_11.dwg By: v-kriewamr

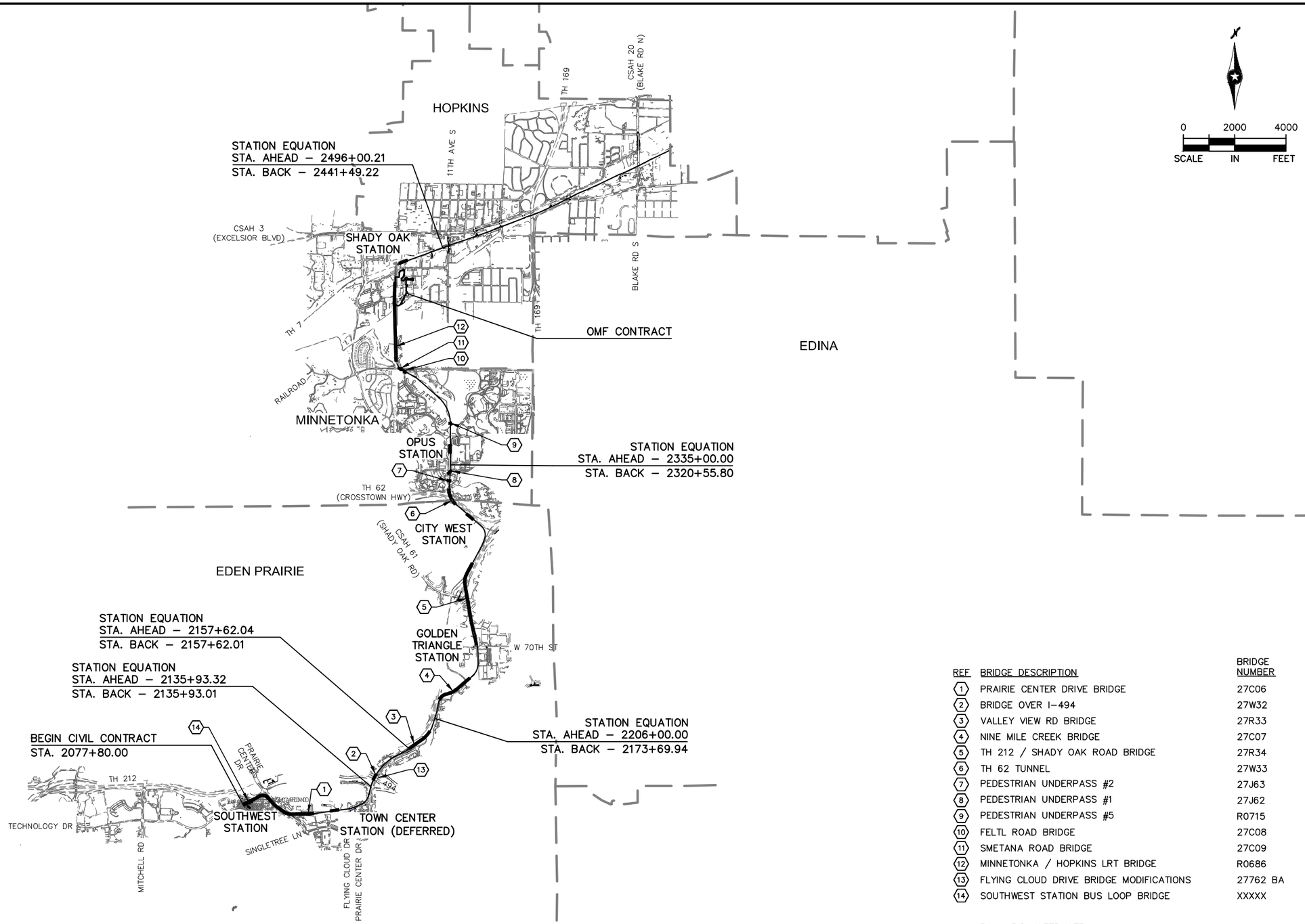

REF	BRIDGE DESCRIPTION	BRIDGE NUMBER
1	PRAIRIE CENTER DRIVE BRIDGE	27C06
2	BRIDGE OVER I–494	27W32
3	VALLEY VIEW RD BRIDGE	27R33
4	NINE MILE CREEK BRIDGE	27C07
5	TH 212 / SHADY OAK ROAD BRIDGE	27R34
6	TH 62 TUNNEL	27W33
7	PEDESTRIAN UNDERPASS #2	27J63
8	PEDESTRIAN UNDERPASS #1	27J62
9	PEDESTRIAN UNDERPASS #5	R0715
10	FELTL ROAD BRIDGE	27C08
11	SMETANA ROAD BRIDGE	27C09
12	MINNETONKA / HOPKINS LRT BRIDGE	R0686
13	FLYING CLOUD DRIVE BRIDGE MODIFICATIONS	27762 BA
14	SOUTHWEST STATION BUS LOOP BRIDGE	XXXXX

BA – BID ALTERNATE

NO.	DATE	BY	CHECK	DESIGN	REVISION / SUBMITTAL

AECOM

90% SUBMISSION - 01/22/16

METROPOLITAN COUNCIL

SOUTHWEST Green Line LRT Extension

CIVIL - VOLUME 11E
GENERAL
KEY MAP
SHEET 1

DISCIPLINE: GENERAL

SHEET NAME: W0-GEN-KEY-001

SHEET 3 OF 111

Jan, 16 2016 04:48 pm V:\3400_ADC\CAD\CAD MANAGEMENT\DRAWING LIST\COVER SHEETS 90%\W0-GEN-KEY.dwg By: V-KriewaMR

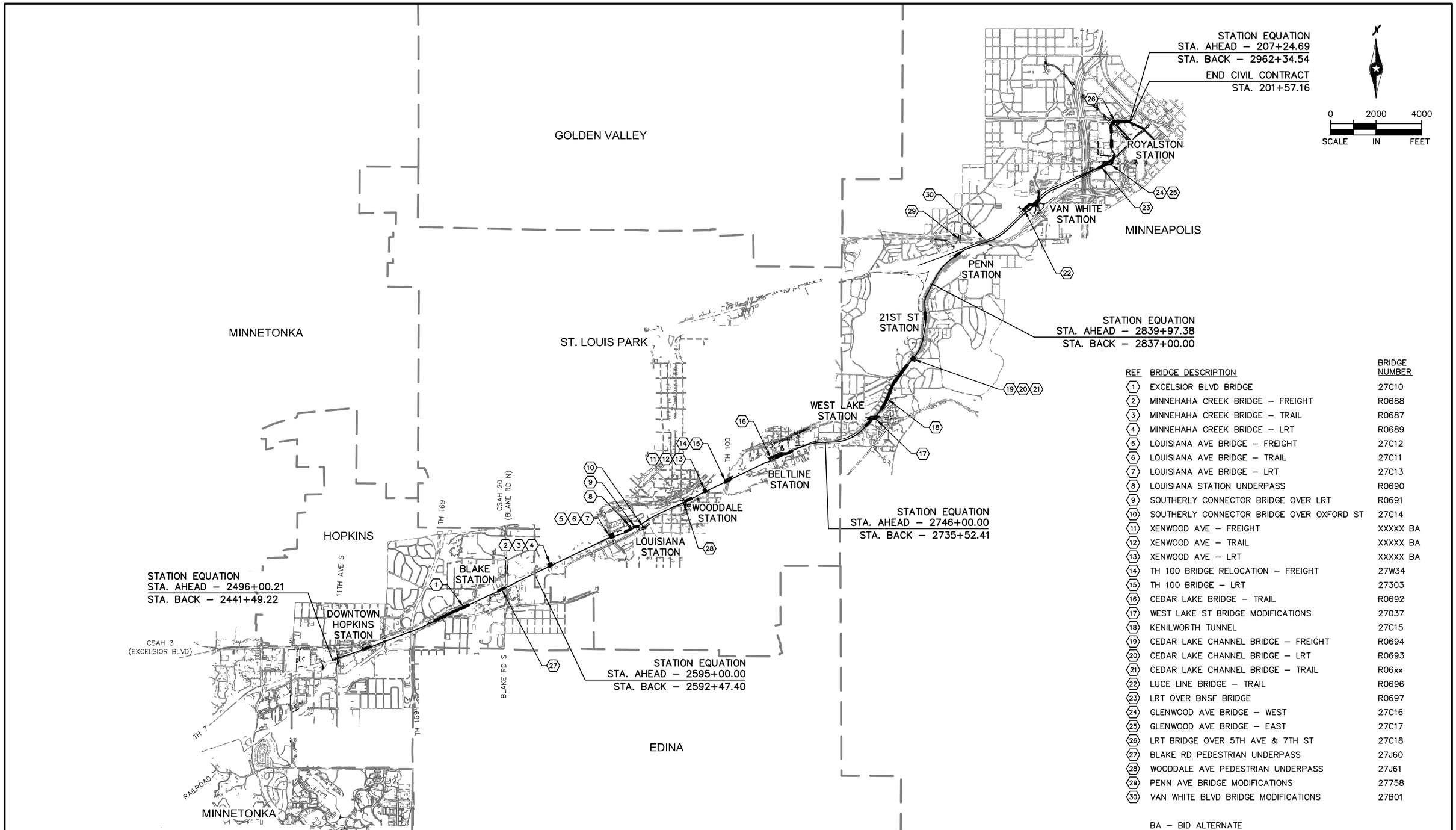

REF	BRIDGE DESCRIPTION	BRIDGE NUMBER
1	EXCELSIOR BLVD BRIDGE	27C10
2	MINNEHAHA CREEK BRIDGE – FREIGHT	R0688
3	MINNEHAHA CREEK BRIDGE – TRAIL	R0687
4	MINNEHAHA CREEK BRIDGE – LRT	R0689
5	LOUISIANA AVE BRIDGE – FREIGHT	27C12
6	LOUISIANA AVE BRIDGE – TRAIL	27C11
7	LOUISIANA AVE BRIDGE – LRT	27C13
8	LOUISIANA STATION UNDERPASS	R0690
9	SOUTHERLY CONNECTOR BRIDGE OVER LRT	R0691
10	SOUTHERLY CONNECTOR BRIDGE OVER OXFORD ST	27C14
11	XENWOOD AVE – FREIGHT	XXXXX BA
12	XENWOOD AVE – TRAIL	XXXXX BA
13	XENWOOD AVE – LRT	XXXXX BA
14	TH 100 BRIDGE RELOCATION – FREIGHT	27W34
15	TH 100 BRIDGE – LRT	27303
16	CEDAR LAKE BRIDGE – TRAIL	R0692
17	WEST LAKE ST BRIDGE MODIFICATIONS	27037
18	KENILWORTH TUNNEL	27C15
19	CEDAR LAKE CHANNEL BRIDGE – FREIGHT	R0694
20	CEDAR LAKE CHANNEL BRIDGE – LRT	R0693
21	CEDAR LAKE CHANNEL BRIDGE – TRAIL	R06xx
22	LUCE LINE BRIDGE – TRAIL	R0696
23	LRT OVER BNSF BRIDGE	R0697
24	GLENWOOD AVE BRIDGE – WEST	27C16
25	GLENWOOD AVE BRIDGE – EAST	27C17
26	LRT BRIDGE OVER 5TH AVE & 7TH ST	27C18
27	BLAKE RD PEDESTRIAN UNDERPASS	27J60
28	WOODDALE AVE PEDESTRIAN UNDERPASS	27J61
29	PENN AVE BRIDGE MODIFICATIONS	27758
30	VAN WHITE BLVD BRIDGE MODIFICATIONS	27B01

BA – BID ALTERNATE

NO.	DATE	BY	CHECK	DESIGN	REVISION / SUBMITTAL

AECOM

90% SUBMISSION - 01/22/16

METROPOLITAN COUNCIL

SOUTHWEST Green Line LRT Extension

CIVIL - VOLUME 11E
GENERAL
KEY MAP
SHEET 2

DISCIPLINE: GENERAL

SHEET NAME: E0-GEN-KEY-002

SHEET 4 OF 111

Jan, 16 2016 04:50 pm V:\3400_ADC\CAD\CAD MANAGEMENT\DRAWING LIST\COVER SHEETS 90%\E0-GEN-KEY.dwg By: V-KriewaMR

SYMBOLS

- PROPOSED DIRECTIONAL LANE USE
- EXISTING DIRECTIONAL LANE USE
- FLASHER (FREIGHT & PEDESTRIAN)
- CROSSING GATE (FREIGHT & LRT)
- CANTILEVER SIGNAL
- RAIL TURNOUT
- RAIL CROSSOVER (DOUBLE)
- RAIL CROSSOVER (SINGLE)
- POINT OF SWITCH (PS)
- OCS POLE FOUNDATION
- RAIL LUBRICATOR
- POINT OF INTERSECTION (PI)
- W2–200 — RAILROAD CURVE NUMBER
- ACCESSIBLE PEDESTRIAN CURB RAMP (DESIGN VARIES)
- HANDICAP PARKING STALL
- TACTILE WARNING STRIP
- TPSS BUILDING (TPSS–SW###) – NIC
  TUNNEL SYSTEMS HOUSE (TSY–SW###) – NIC
- SIGNAL / COMMUNICATION HOUSE – NIC
- STORM SEWER MANHOLE
- STORM SEWER CATCH BASIN
- STORM SEWER FLARED END SECTION
- STORM SEWER CLEAN–OUT
- STORM SEWER PUMP STATION
- DTXX INV XXX.XX — DRAINTILE ID
- XXXX – ST — STORM SEWER STRUCTURE ID
- C E — BUS SHELTER
- ROADWAY / PEDESTRIAN LIGHT

LINETYPES

- ROADWAY ℄
- TRACK ℄ (LRT)
- TRACK ℄ (FRT)
- RETAINING WALL
- BALLAST CURB
- TUNNEL WALL
- FENCE
- EX ROW
- PROP ROW
- PROP TCE
- PROP PE
- FENCE / RAILING
- ID ID — FREIGHT INTRUSION DETECTION
- CONCRETE CURB AND GUTTER
- TRAIL (WIDTH VARIES)
- SIDEWALK
- DRIVEWAY
- BRIDGE
- SAWCUT
- DELINEATED WETLAND
- BMP (NWL) WATER EDGE
- PROPOSED FLOODPLAIN MITIGATION AREA
- SILT FENCE
- BALE BARRIER
- STORM SEWER
- CASING PIPE
- PIPE REMOVAL
- STRUCTURE REMOVAL
- FLOATING SILT FENCE
- SUPER DUTY SILT FENCE
- CONSTRUCTION LIMITS
- ROCK WEEPER
- DIVERSION DITCH
- OVERLAND FLOW
- CROSSWALK
- STOP BAR
- MEDIAN NOSE
- EP–EP–18 — WETLAND ID

CONSTRUCTION PACKAGE NOTE

NOTE: THE SWLRT CONSTRUCTION IS BEING IMPLEMENTED THROUGH THREE MAIN CONSTRUCTION PACKAGES; CIVIL, SYSTEMS & TUNNEL FACILITIES (SYS), AND OPERATIONS & MAINTENANCE FACILITY (OMF). CERTAIN SYS AND OMF SYMBOLS ARE SHOWN ON THE CIVIL CONTRACT PLANS FOR INFORMATION ONLY AND CERTAIN FACILITIES ARE NOT PART OF THE CIVIL CONTRACT.

NO.	DATE	BY	CHECK	DESIGN	REVISION / SUBMITTAL

AECOM

90% SUBMISSION - 01/22/16

METROPOLITAN COUNCIL

SOUTHWEST Green Line LRT Extension

CIVIL - VOLUME 11E
GENERAL
NOTES, ABBREVIATIONS, AND SYMBOLS
SHEET 1

DISCIPLINE: GENERAL

SHEET NAME: 00-GEN-NTS-001

Jan, 18 2016 07:45 am V:\3400_ADC\CAD\CAD MANAGEMENT\DRAWING LIST\COVER SHEETS 90%\CIV-GEN-NTS.dwg By: V-KriewaMR

ABBREVIATIONS

3–2 (EG)	SIGNAL HEAD NUMBER (PHASE 3, NO. 2)
AD	ALGEBRAIC DIFFERENCE
AVE	AVENUE
AWF	ADVANCE WARNING FLASHER
BA	BID ALTERNATE
BGN	BEGIN
BP	BEGINNING POINT
BVCE	BEGINNING VERTICAL CURVE ELEVATION
BVCS	BEGINNING VERTICAL CURVE STATION
BLVD	BOULEVARD
BMP	BEST MANAGEMENT PRACTICE
BNSF	BURLINGTON NORTHERN SANTA FE RAILWAY
C&G	CURB AND GUTTER
℄	CENTERLINE
CB	CATCH BASIN
CE	CLEARANCE ENVELOPE
CIR	CIRCLE
CO	DRAINTILE CLEANOUT STRUCTURE
CP	CANADIAN PACIFIC
CPRAIL	CANADIAN PACIFIC RAILWAY
CS	CURVE TO SPIRAL
CSAH	COUNTY STATE AID HIGHWAY
D&U	DRAINAGE AND UTILITY
DF	DIRECT FIXATION
DR	DRIVE
DT	DRAINTILE
DTL	DETAIL
DWY	DRIVEWAY
E	EAST
Ea	ACTUAL SUPERELEVATION (INCHES)
EB	EAST BOUND
EL or ELEV	ELEVATION
EP	ENDING POINT
ESMT	EASEMENT
Eu	UNBALANCED SUPERELEVATION (INCHES)
EVCE	ENDING VERTICAL CURVE ELEVATION
EVCS	ENDING VERTICAL CURVE STATION
EVP	EMERGENCY VEHICLE PRE–EMPTION
EX	EXISTING
FES	FLARED END SECTION
FYA	FLASHING YELLOW ARROW
GR RD	GROUND ROD
GRN	GREEN INDICATION
HCRRA	HENNEPIN COUNTY REGIONAL RAILROAD AUTHORITY
INL	BRIDGE DRAIN INLET
INS GR	INSULATED GROUND
IP	INPLACE
LED	LIGHT EMITTING DIODE
LH	LEFT HAND
LN	LANE
LRCI	LOCALLY REQUESTED CAPITAL INVESTMENT
LRT	LIGHT RAIL TRANSIT
LRV	LIGHT RAIL VEHICLE
LT	LEFT
LUM	LUMINAIRE
L_C	CURVE LENGTH (FEET)
L_S	SPIRAL LENGTH (FEET)
MIN	MINIMUM
MPH	MILES PER HOUR
MPLS	CITY OF MINNEAPOLIS
MPRB	MINNEAPOLIS PARK AND RECREATION BOARD
N	NORTH
NB	NORTH BOUND
NIC	NOT IN CONTRACT
NO	NUMBER
NWL	NORMAL WATER LINE
OCS	OUTLET CONTROL SYSTEM
OCS	OVERHEAD CONTACT SYSTEM
OMF	OPERATIONS AND MAINTENANCE FACILITY
OH	OVERHEAD
P1–1 (EG)	PEDESTRIAN HEAD (PHASE 1, NO. 1)
PB2–1 (EG)	PUSHBUTTON (PHASE 2, NO. 1)
PC	POINT OF CURVE
PE	PERMANENT EASEMENT
PED	PEDESTRIAN
PITO	POINT OF INTERSECTION OF TURNOUT
PKWY	PARKWAY
POB	POINT OF BEGINNING
POE	POINT OF ENDING
POT	POINT ON TANGENT
PROP	PROPOSED
PS	POINT OF SWITCH
PT	POINT OF TANGENT
PVI	POINT OF VERTICAL INTERSECTION
R	RADIUS (FEET)
RCP	REINFORCED CONCRETE PIPE
RD	ROAD
RL	RAIL LUBRICATOR
r	RATE OF CHANGE VERTICAL CURVE
RH	RIGHT HAND
ROW	RIGHT OF WAY
RT	RIGHT
S	SOUTH
SB	SOUTH BOUND
SC	SPIRAL TO CURVE
SIG–COMM	SIGNAL COMMUNICATION
SOP	SOURCE OF POWER
ST	STREET
ST	SPIRAL TO TANGENT
ST	STORM MANHOLE STRUCTURE
STA	STATION
TCE	TEMPORARY CONSTRUCTION EASEMENT
TH	TRUNK HIGHWAY
THRU	THROUGH
TOR	TOP OF RAIL
TPSS	TRACTION POWER SUBSTATION
TRK	TRACK
TS	TANGENT TO SPIRAL
TYP	TYPICAL
UG	UNDERGROUND
V	DESIGN VELOCITY (MPH)
VC	VERTICAL CURVE
VDE	VEHICLE DYNAMIC ENVELOPE
W	WEST
WB	WEST BOUND
WLK	WALK INDICATION

TRAIL INDEX

ABBREVIATED NAME	FULL NAME / LOCATION
TRAIL 1	UNDER RED CIRCLE DR, LRT, AND YELLOW CIRCLE DR
TRAIL 2	FROM TRAIL 1 TO GREEN CIRCLE DR
TRAIL 3	OPUS STATION ACCESS FROM BREN RD E
TRAIL 4	FROM BREN RD W TO TRAIL 5
TRAIL 5	FROM OPUS STATION TO GREEN CIRCLE DR
TRAIL 6	FROM TRAIL 5 TO SMETANA RD
CEDAR LAKE TRAIL	CEDAR LAKE LRT REGIONAL TRAIL/FROM SHADY OAK STATION TO 11TH AVE
CEDAR LAKE TRAIL	CEDAR LAKE LRT REGIONAL TRAIL/WEST OF EXCELSIOR
CEDAR LAKE TRAIL	CEDAR LAKE LRT REGIONAL LRT TRAIL/BETWEEN EXCELSIOR AND KENILWORTH TRAIL CONNECTION
MIDTOWN GREENWAY	MIDTOWN GREENWAY/EAST OF KENILWORTH TRAIL CONNECTION
TRAIL A	KENILWORTH TRAIL (SECONDARY)/BETWEEN CEDAR–ISLES CHANNEL AND 21ST STREET STATION
TRAIL B	KENILWORTH TRAIL (SECONDARY)/BETWEEN 21ST STREET STATION AND PENN STATION
TRAIL B	CEDAR LAKE TRAIL (SECONDARY)/EAST OF PENN STATION
TRAIL C	10' CONNECTOR TRAIL FROM CEDAR LAKE LRT REGIONAL TRAIL TO TYLER AVE.
TRAIL D	10' CONNECTOR TRAIL/BELTLINE STATION TO CEDAR LAKE LRT REGIONAL TRAIL
KENILWORTH TRAIL	KENILWORTH TRAIL (MAIN)/W LAKE ST TO PENN STATION
CEDAR LAKE TRAIL	CEDAR LAKE TRAIL (MAIN)/PENN STATION TO TH 394
TRAIL E	KENILWORTH TRAIL (SECONDARY)/EAST OF W LAKE ST
TRAIL F	KENILWORTH TRAIL (SECONDARY)/WEST OF CEDAR LAKE PKWY
TRAIL G	NOT USED
TRAIL H	10' CONNECTOR TRAIL/EAST OF PENN STATION TO KENWOOD PKWY
TRAIL I	10' CONNECTOR TRAIL FROM CEDAR LAKE REGIONAL TRAIL TO CSAH 20 (BLAKE RD)
CEDAR LAKE TRAIL	CEDAR LAKE TRAIL (MAIN)/AT–GRADE CROSSING AT PENN STATION
TRAIL J	CEDAR LAKE TRAIL (SECONDARY)/NORTHWEST OF PENN STATION
TRAIL K	CEDAR LAKE TRAIL (SECONDARY)/NORTHWEST OF PENN STATION
TRAIL L	CEDAR LAKE TRAIL (SECONDARY)/EAST OF PENN STATION
TRAIL M	10' CONNECTOR TRAIL FROM CEDAR LAKE REGIONAL TRAIL TO CSAH 20 (BLAKE RD)
TRAIL N	8' CONNECTOR TRAIL FROM CEDAR LAKE TRAIL TO EDGEBROOOK DRIVE
TRAIL O	8' CONNECTOR TRAIL FROM CEDAR LAKE TRAIL TO W LAKE STREET
TRAIL P	8' CONNECTOR TRAIL FROM CEDAR LAKE TRAIL TO LOUISIANA AVE
TRAIL Q	10' CONNECTOR TRAIL FROM CEDAR LAKE TRAIL TO TH 7 SERVICE ROAD
TRAIL R	20' CONNECTOR TRAIL FROM VAN WHITE STATION TO CEDAR LAKE TRAIL
TRAIL S	10' CONNECTOR TRAIL FROM CEDAR LAKE REGIONAL TRAIL TO BELTLINE BLVD
TRAIL T	8' CONNECTOR TRAIL FROM VAN WHITE STATION TO VAN WHITE MEMORIAL BLVD
TRAIL U	10' TRAIL PARALLEL TO CEDAR LAKE PKWY
LUCE LINE TRAIL	LUCE LINE REGIONAL TRAIL/ON BRIDGE OVER LIGHT RAIL
TRAIL V	CONNECTOR TRAIL TO LUCE LINE REGIONAL TRAIL WEST OF LIGHT RAIL
TRAIL W	CONNECTOR TRAIL TO LUCE LINE REGIONAL TRAIL WEST OF LIGHT RAIL
TRAIL X	NOT USED
TRAIL Y	12' CONNECTOR TRAIL FROM CEDAR LAKE REGIONAL TRAIL TO WOODDALE AVE S
TRAIL Z	12' CONNECTOR TRAIL FROM CEDAR LAKE REGIONAL TRAIL TO WOODDALE AVE S
TRAIL AA	8' PEDESTRIAN CONNECTOR TRAIL FROM TRAIL B TO PENN STATION
TRAIL BB	8' PEDESTRIAN CONNECTOR TRAIL FROM TRAIL B TO PENN STATION
TRAIL CC	10' CONNECTOR TRAIL FROM KENILWORTH TRAIL (MAIN) TO PENN STATION

Jan, 16 2016 04:50 pm V:\3400_ADC\CAD\CAD MANAGEMENT\DRAWING LIST\COVER SHEETS 90%\CIV-GEN-NTS.dwg By: V-KriewaMR

NO.	DATE	BY	CHECK	DESIGN	REVISION / SUBMITTAL

AECOM

90% SUBMISSION - 01/22/16

METROPOLITAN COUNCIL

SOUTHWEST Green Line LRT Extension

CIVIL - VOLUME 11E
GENERAL
NOTES, ABBREVIATIONS, AND SYMBOLS
SHEET 2

DISCIPLINE: GENERAL

SHEET NAME: 00-GEN-NTS-002

ABBREVIATIONS

@	AT
℄	BASELINE
℄	CENTERLINE
ø	DIAMETER
ℙ	PLATE
#	POUND/ NUMBER
A/C	AIR CONDITIONING
ACS	ACCESS
AD	AREA DRAIN
ADA	AMERICANS WITH DISABILITIES ACT
ADDL	ADDITIONAL
ADJ	ADJACENT
AESS	ARCHITECTURALLY EXPOSED STRUCT STL
AFF	ABOVE FINISH FLOOR
ALUM	ALUMINUM
ANC	ANCILLARY
ANOD	ANODIZED
ANT	ANTENNA(E)
APPROX	APPROXIMATE
ARCH	ARCHITECT(URAL)
ATS	AUTOMATIC TRANSFER SWITCH
AVE	AVENUE
AWM	ARCHITECTURAL WOVEN MESH
BATT	BATTERY
BD	BOARD
BL	BASELINE
BLDG	BUILDING
BLKG	BLOCK(ING)
BLVD	BOULEVARD
BM	BENCH MARK
BNDRY	BOUNDARY
B.O.	BASE OF/ BOTTOM OF
BRK	BRICK
BTW	BETWEEN
CAB	CABINET
CAR	COUNCIL AUTHORIZED REPRESENTATIVE
CCTV	CCTV CAMERA
CEM	CEMENT(ITIOUS)
CI	CAST IRON
CIP	CAST IN PLACE
CJ	CONTROL JOINT
CL	CENTERLINE
CLG	CEILING
CLR	CLEAR
CMU	CONCRETE MASONARY UNIT
CO	COUNTY
COL	COLUMN
COMM	COMMUNICATION(S)
CONC	CONCRETE
CONST	CONSTANT
CONSTR JT	CONSTRUCTION JOINT
CONT	CONTINUE(OUS)
COORD	COORDINATE
CSK	COUNTERSUNK
CT	CERAMIC TILE
CTG	COATING
D	DEEP
DEC	DECORATIVE
DIA	DIAMETER
DIM(S)	DIMENSION(S)
DIP	DUCTILE IRON PIPE
DIR	DIRECTIVE
DISP	DISPLAY
DIV	DIVISION
DN	DOWN
DR	DOOR
DRN	DRAIN
DTL	DETAIL
DWG	DRAWING
E	EAST
EA	EACH
EF	EACH FACE
EJ	EXPANSION JOINT
EL	ELEVATION
ELEC	ELECTRIC(AL)
ELEV	ELEVATOR/ ELEVATION
EMR	ELEVATOR MACHINE ROOM
ENCL	ENCLOSURE
ENGR(ING)	ENGINEER(ING)
ENT	ENTRANCE/ ENTRY
EP	EDEN PRAIRIE
EQ	EQUAL
EQUIP	EQUIPMENT
ETL	EMERGENCY TELEPHONE
EXIST	EXISTING
EXT	EXTERIOR
FC	FACE
FCO	FLOOR CLEANOUT
FF	FINISHED FLOOR
FIN	FINISH
FIXT	FIXTURE
FL	FLOOR
FLASH	FLASHING
FLUOR	FLUORESCENT
FO	FACE/ FRONT OF
FRP	FIBERGLASS REINFORCED PANEL
FT	FOOT/ FEET
FTG	FOOTING
FUTR	FUTURE
GA	GAUGE
GALV	GALVANIZED
GC	GENERAL CONTRACTOR
GL	GLASS/ GLAZING
GPM	GALLONS PER MINUTE
GR	GRADE
GS	GROUND SURFACE
GYP	GYPSUM
H	HIGH
HH	HAND HOLE
HSS	HOLLOW STRUCTURAL SECTION
HT	HEIGHT
HDWR	HARDWARE
HM	HOLLOW METAL
HORIZ	HORIZONTAL
HP	HIGH PERFORMANCE
HOP	HOPKINS
HR	HOUR
HTR	HEATER
HVAC	HEATING, VENTLATION AND AIR CONDITIONING
ID	IDENTIFICATION/INSIDE DIAMETER
IN	INCH(ES)
INCL	INCLUDING
INF	INFILL
INSUL	INSULATION
INT	INTERIOR
INV	INVERT
J-BOX	JUNCTION BOX
JT	JOINT
LDR	LEADER
LG	LONG
LLH	LONG LEG HORIZONTAL
LLV	LONG LEG VERTICAL
LOC	LOCATION
LVR(S)	LOUVER(S)
MACH	MACHINE
MAINT	MAINTENANCE
MAS	MASONRY
MAT	MATERIAL
MAX	MAXIMUM
MCP	METAL CEILING PANEL
MECH	MECHANICAL
MED	MEDIUM
MEMB	MEMBRANE
MFR	MANUFACTURER(ED)
MH	MANHOLE
MID	MIDDLE
MIN	MINIMUM
MIR	MIRROR
MISC	MISCELLANEOUS
MN	MINNESOTA
MN/DOT	MINNESOTA DEPARTMENT OF TRANSPORTATION
MO	MASONRY OPENING
MPLS	MINNEAPOLIS
MT	METRO TRANSIT
MTD	MOUNT(ED)
MTKA	MINNETONKA
MTL	METAL
N/A	NOT APPLICABLE
N	NORTH
NIC	NOT IN CONTRACT
NO	NUMBER
NOM	NOMINAL
NTS	NOT TO SCALE
OC	ON CENTER
OCS	OVERHEAD CONTACT SYSTEM
OH	OVERHEAD
OMF	OPERATIONS AND MAINTENANCE FACILITY
OPER	OPERABLE
OPNG	OPENING
OPP	OPPOSITE
PA	PUBLIC ADDRESS
PART	PARTIAL
PERP	PERPENDICULAR
PL	PLATE
PLBG	PLUMBING
PLWD	PLYWOOD
PNL(S)	PANEL(S)
PRCST/PC	PRECAST
PRE-FAB	PRE-FABRICATED
PSI	POUND PER SQUARE INCH
PT	POINT
PTD	PAINT(ED)
PVC	POLYVINYL CHLORIDE
PROP	PROPOSED/PROPERTY
QTY	QUANTITY(IES)
R	REVEAL
RAD	RADIUS
RD	ROOF DRAIN
REF	REFERENCE
REINF	REINFORCE(MENT)(ING)
REQD	REQUIRED
REQS	REQUIREMENTS
REV	REVISE (REVISION)
RM	ROOM
RO	ROUGH OPENING
ROW	RIGHT-OF-WAY
RSV	RAIL SMARTCARD VALIDATOR
RVS	REVERSE
RWL	RAIN WATER LEADER
S	SOUTH
SCHED	SCHEDULE
SCC	STATION COMMUNICATION CABINET
SEC	STATION ELECTRICAL CABINET
SF	SQUARE FEET
SHTHG	SHEATHING
SIG	SIGNAL
SIM	SIMILAR
SLP	ST. LOUIS PARK
SLNT	SEALANT
SHT	SHEET
SK	SKYLIGHT
SPEC	SPECIFICATION
SPKR	SPEAKER
SPO	SOUTHWEST PROJECT OFFICE
SQ	SQUARE
SS	STAINLESS STEEL
ST	STREET
STA	STATION
STD	STANDARD
STL	STEEL
STOR	STORAGE
STRUCT	STRUCTURE(AL)
SUSP	SUSPENDED
SWLRT SYS	SOUTHWEST CORRIDOR LIGHT RAIL TRANSIT SYSTEM
T	TREAD
TEMP	TEMPORARY
T/E	TRACTION/ELECTRIC
TH	THICK(NESS)
THRES	THRESHOLD
THRU	THROUGH
T.O.	TOP OF
TOW	TOP OF WALL
TPSS	TRACTION POWER SUBSTATION
TUNN	TUNNEL
TVM	TICKET VENDING MACHINE
TYP	TYPICAL
UNO	UNLESS NOTED OTHERWISE
VERT	VERTICAL
VMS	VARIABLE MESSAGE SIGN
VS	VENT SHAFT
W/	WITH
W/O	WITHOUT
W	WEST/WIDTH
WCO	WALL CLEANOUT
WP	WORKING POINT
WD	WOOD
WDW	WINDOW

DRAWING CODES

DTL	COMMON DETAILS

SYMBOLS

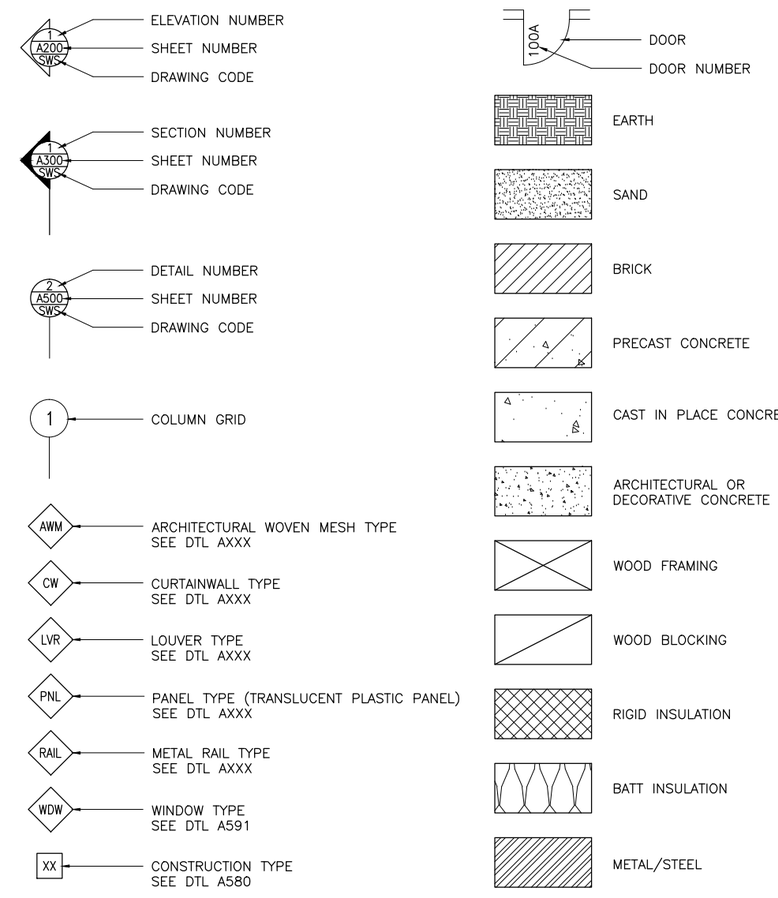

NO.	DATE	BY	CHECK	DESIGN	REVISION / SUBMITTAL

AECOM

90% SUBMISSION - 01/22/16

METROPOLITAN COUNCIL

SOUTHWEST Green Line LRT Extension

CIVIL - VOLUME 11E
STATIONS
ARCHITECTURAL ABBREVIATIONS, SYMBOLS, AND DRAWING CODES

DISCIPLINE: ARCHITECTURE

SHEET NAME: D0-ARC-ABR-020

SHEET 8 OF 111

Jan, 18 2016 11:28 am V:\3400_ADC\CAD\OVERALL\plan sheets\architecture\D0-ARC-ABR-020.dwg By: v-mccarrtp

PIPING SYMBOLS

- F — FIRE PROTECTION WATER SERVICE
- FS — FIRE SPRINKLER
- SW — SANITARY WASTE (BELOW GRADE)
- SW — SANITARY WASTE (ABOVE GRADE)
- SD — STORM DRAIN (BELOW GRADE)
- RWL — RAINWATER CONDUCTOR/LEADER OR STORM DRAIN (ABOVE GRADE)
- CD — CONDENSATE DRAIN
- D — DRAIN
- PD — PUMPED DRAIN
- V — ABOVE FLOOR VENT
- V — VENT
- V — UNDERFLOOR VENT
- DW — DOMESTIC WATER
- CW — COLD WATER
- HW — HOT WATER
- RCW — RECIRCULATING HOT WATER
- TW — TEMPERED WATER
- RLL — REFRIGERANT LIQUID
- RSL — REFRIGERANT SUCTION
- RHG — REFRIGERANT HOT GAS

VALVES FITTINGS APPURTENANCES

- UNION
- SHUT OFF VALVE
- GATE VALVE
- OUTSIDE STEM YOKE VALVE
- CHECK VALVE
- BALANCING VALVE
- SOLENOID VALVE
- 2 WAY CONTROL VALVE
- 3 WAY CONTROL VALVE
- THERMOSTATIC MIXING VALVE
- PRESSURE REGULATING VALVE
- WATER REGULATING VALVE
- BALL VALVE
- BUTTERFLY VALVE
- TEMPERATURE PRESSURE RELIEF VALVE
- BACKFLOW PREVENTER
- REDUCED PRESSURE BACKFLOW PREVENTER
- PIPE ANCHOR
- PIPE GUIDE
- FLOW MEASURING STATION
- STRAINER
- FLEXIBLE PIPE CONNECTOR
- SHOCK ABSORBER

- PRESSURE GAUGE
- THERMOMETER
- FLOOR SINK
- AREA DRAIN, FLOOR DRAIN, ROOF DRAIN
- CD — CEILING WALL CLEANOUT
- CD — FLOOR CLEANOUT
- CAPPED PIPE
- DIRECTION OF FLOW
- TOP TAKE OFF
- RISER
- BOTTOM TAKE OFF
- PIPE DROP
- PIPE RISE
- TRENCH DRAIN

CODE MANUALS AND STANDARDS AS THEY APPLY

1. AMERICAN NATIONAL STANDARD INSTITUTE (ANSI);
2. AMERICAN SOCIETY OF HEATING, REFRIGERATION AND AIR CONDITIONING ENGINEERS (ASHRAE);
3. AMERICAN SOCIETY OF MECHANICAL ENGINEERS (ASME);
4. AMERICAN SOCIETY FOR TESTING AND MATERIALS (ASTM) PUBLICATIONS;
5. CITY CODES;
6. COUNTY ORDINANCES;
7. INTERNATIONAL ELECTROTECHNICAL COMMISSION (IEC) STANDARDS;
8. INTERNATIONAL BUILDING CODE (IBC) PUBLICATIONS;
9. INSTITUTE OF ELECTRICAL AND ELECTRONIC ENGINEERS (IEEE), ADDITIONAL ELECTRICAL SAFETY CODE (NESC) STANDARDS;
10. INTERNATIONAL ORGANIZATION FOR STANDARDIZATION (ISO);
11. MINNESOTA STATE BUILDING CODE (MSBC);
12. MINNESOTA PLUMBING CODE 2012;
13. MINNESOTA MECHANICAL CODE 2015;
14. MINNESOTA ENERGY CODE 2015;
15. NATIONAL ELECTRICAL CODE (NEC);
16. NATIONAL ELECTRICAL MANUFACTURERS ASSOCIATIONS (NEMA) STANDARDS;
17. NATIONAL FIRE PROTECTION ASSOCIATION (NFPA) PUBLICATIONS

PLUMBING GENERAL NOTES:

1. NEW/RELOCATED, BURIED, PRESSURIZED FERROUS PIPING SYSTEMS REQUIRE CATHODIC PROTECTION.
2. ALL CATHODICALLY PROTECTED MAINS SHALL HAVE A DIELECTRIC EXTERNAL COATING SYSTEM MADE FOR BELOW GRADE APPLICATIONS.
3. POLYWRAP SHALL NOT BE USED ON CATHODICALLY PROTECTED MAINS.
4. ALL CASINGS SHALL BE ISOLATED FROM THE CARRIER PIPE.
5. ALL CATHODICALLY PROTECTED PIPE SHALL BE ELECTRICALLY ISOLATED FROM NON-CATHODICALLY PROTECTED MAINS AT ALL TIE-INS INCLUDING SERVICE CONNECTIONS.
6. ALL CATHODICALLY PROTECTED PIPE SHALL BE ELECTRICALLY ISOLATED FROM PIPING INSIDE NEW STRUCTURES BY INSTALLATION OF INSULATED FITTINGS INSIDE THE STRUCTURE AS CLOSE AS PRACTICAL TO THE POINT OF ENTRY OF THE PIPE INTO THE STRUCTURE.

ABBREVIATIONS

ABV	ABOVE
AC	AIR CONDITIONING
ACU	AIR CONDITIONING UNIT
AFC	ABOVE FINISHED CEILING
AFF	ABOVE FINISHED FLOOR
AHU	AIR HANDLING UNIT
APPROX	APPROXIMATE
ARCH	ARCHITECT ARCHITECTURAL
BFF	BELOW FINISHED FLOOR
BFV	BUTTERFLY VALVE
BG	BELOW GRADE
BHP	BRAKE HORSEPOWER
BEL, BLW	BELOW
BOD	BOTTOM OF DUCT ELEVATION A F F
BOP	BOTTOM OF PIPE ELEVATION A F F
BOT	BOTTOM
CA	COMPRESSED AIR
CC	COOLING COIL
CFH	CUBIC FEET PER HOUR
CFM	CUBIC FEET PER MINUTE
CI	CAST IRON
CL	CENTER LINE
CLG	CEILING
CPRSR	COMPRESSOR
CO	CLEANOUT
COND	CONDENSATE
CONN	CONNECTION
CONSTR	CONSTRUCTION
CONT	CONTINUED, CONTINUOUS
CONTR	CONTRACTOR
COOL	COOLING
CU	CONDENSING UNIT
CW	COLD WATER
DR	DRAIN
DT	DRIP TRAP
DEMO	DEMOLITION
D	DIAMETER
DN	DOWN
E	EAST
EA	EACH
ELEC	ELECTRIC
EL	ELEVATION
ENCL	ENCLOSURE
EWH	ELECTRIC WATER HEATER/ ELECTRIC WALL HEATER
EXP T	EXPANSION TANK
EXP	EXPANSION
EXST	EXISTING
FD	FLOOR DRAIN
F.F. EL	FINISHED FLOOR ELEVATION
FLR	FLOOR
FPM	FEET PER MINUTE
FRP	FIBERGLASS REINFORCED PIPE
FT	FOOT OR FEET
FUT	FUTURE
GA	GAUGE GAGE
GEN	GENERAL
GFCI	GROUND-FAULT CIRCUIT INTERRUPTER
GPM	GALLONS PER MINUTE
GR	GRADE GROUND
H	HIGH, HEIGHT
HC	HEATING COIL
HORIZ	HORIZONTAL
ID	INSIDE DIMENSION
IBS	IN BEAM SPACE
IJS	IN JOIST SPACE
I E	INVERT ELEVATION
L AV	LAVATORY
L B	POUND
LF	LINEAL FEET
LG	LONG OR LENGTH
MAX	MAXIMUM
MBH	1000 BTU PER HOUR
MFG	MANUFACTURER
MIN	MINIMUM
MS	MOP SINK
MTR	MOTORIZED, MOTOR
N	NORTH
NO.	NUMBER
NTS	NOT TO SCALE
OA	OUTSIDE AIR
O.C.	ON CENTER
OD	OUTSIDE DIMENSION
OPNG	OPENING
ORD	OVERFLOW ROOF DRAIN
P	PUMP, PUMPED
PD	PRESSURE DIFFERENCE
PRV	PRESSURE REGULATING VALVE
PSI	POUNDS PER SQUARE INCH
PSIG	PSI GAUGE
PVC	POLYVINYL CHLORIDE
RA	RETURN AIR
RAD	RADIATOR, RADIUS
RCVR	RECEIVER
RET	RETURN
RD	ROOF DRAIN
RECIRC	RECIRCULATING
REQD	REQUIRED
RHW	RECIRCULATING HOT WATER
RL	REFRIGERANT LIQUID
RND	ROUND
RPM	REVOLUTIONS PER MINUTE
RWL	RAIN WATER LEADER
S	SOUTH
SP	SUMP PUMP
SPLY	SUPPLY
SPEC	SPECIFICATION
SQ	SQUARE
SS	STAINLESS STEEL
ST	SUMP TANK
STD	STANDARD
SYS	SYSTEM
T	THERMOSTAT
TD	TEMPERATURE DIFF AND TRENCH DRAIN
TEMP	TEMPERATURE
XFR	TRANSFER
THRU	THROUGH
TO	TAKE OFF, TOP OF
TOD	TOP OF DUCT ELEVATION A F F
TOP	TOP OF PIPE ELEVATION A F F
T & P	TEMPERATURE AND PRESSURE
T STAT	THERMOSTAT
TYP	TYPICAL
U F	UNDERFLOOR
UG	UNDERGROUND
UR	URINAL
V	VENT
VERT	VERTICAL
VFD	VARIABLE FREQUENCY DRIVE
VTR	VENT THRU ROOF
W	WEST
WC	WATER CLOSET
WH	WALL HYDRANT
WT	WEIGHT
W/	WITH
W /O	WITHOUT

NO.	DATE	BY	CHECK	DESIGN	REVISION / SUBMITTAL

AECOM

LV ENGINEERING • LLC CERTIFIED WOMEN'S BUSINESS ENTERPRISE

90% SUBMISSION - 01/22/16

METROPOLITAN COUNCIL

SOUTHWEST Green Line LRT Extension

CIVIL - VOLUME 11E
STATIONS
PLUMBING SYMBOLS AND ABBREVIATIONS

DISCIPLINE: PLUMBING

SHEET NAME: D0-PLM-GEN-001

SHEET 9 OF 111

Jan, 16 2016 02:56 pm Z:\Projects\AECOM SWLRT west\3400_ADC\CAD\OVERALL\PLUMBING\D0-PLM-GEN-001.dwg By: craig

DUCTWORK SYMBOLS

- FD — FIRE DAMPER
- FSD — COMBINATION SMOKE FIRE DAMPER
- SUPPLY DUCT UP
- RETURN OR EXHAUST DUCT UP
- SUPPLY DUCT DOWN
- RETURN OR EXHAUST DUCT DOWN
- M — MOTORIZED DAMPER
- B — BACKDRAFT DAMPER
- OPPOSED BLADE
- PARALLEL BLADE
- VOLUME DAMPER
- SUPPLY AIR DIFFUSER
- RETURN OR EXHAUST AIR GRILLE
- 10ø — ROUND DUCT
- 10 12 — RECTANGULAR DUCT FIRST FIG IS SIDE SHOWN
- MANUAL BALANCING DAMPER
- FLEXIBLE DUCT CONNECTION
- AP — ACCESS PANEL SIZE AS REQUIRED
- SQUARE TURN DUCT ELBOW WITH TURNING VANES
- RADIUS DUCT ELBOW WITH RADIUS 1 5 X WIDTH OF SIDE SHOWN
- CONICAL BRANCH TAKE OFF CONNECTION
- 45 D ENTRY BRANCH TAKE OFF CONNECTION WITH FILLER PIECES AT CORNERS
- RIGID SHEET METAL BRANCH DUCT WITH FLEXIBLE AIR DUCT EXTENSION TO DIFFUSER
- TRANSITION 20 D MAXIMUM ANGLE
- ACOUSTICALLY LINED DUCT

DIFFUSER DESIGNATION CODE

D	INDICATES DIFFUSER OR GRILLE TYPE
24x24	INDICATES NECK SIZE DIAMETER IN INCHES OR SQUARE DIFFUSER SIZE IN INCHES
1000	INDICATES CFM

GENERAL SYMBOLS

- 3 — NUMBERED NOTE
- KEY NOTE
- 103 — ROOM NUMBER
- 1 — REVISION NO 1
- ø — DIAMETER OR ROUND
- @ — AT
- ∠ — ANGLE

CONTROL SYMBOLS

- T — THERMOSTAT OR TEMPERATURE SENSOR
- H — HUMIDISTAT OR HUMIDITY SENSOR
- S — TEMPERATURE SENSOR
- CO — CARBON MONOXIDE SENSOR
- $ — TIMER SWITCH
- SP — STATIC PRESSURE SENSOR

CODE MANUALS AND STANDARDS AS THEY APPLY

1. AMERICAN NATIONAL STANDARD INSTITUTE (ANSI);
2. AMERICAN SOCIETY OF HEATING, REFRIGERATION AND AIR CONDITIONING ENGINEERS (ASHRAE);
3. AMERICAN SOCIETY OF MECHANICAL ENGINEERS (ASME);
4. AMERICAN SOCIETY FOR TESTING AND MATERIALS (ASTM) PUBLICATIONS;
5. CITY CODES;
6. COUNTY ORDINANCES;
7. INTERNATIONAL ELECTROTECHNICAL COMMISSION (IEC) STANDARDS;
8. INTERNATIONAL BUILDING CODE (IBC) PUBLICATIONS;
9. INSTITUTE OF ELECTRICAL AND ELECTRONIC ENGINEERS (IEEE), ADDITIONAL ELECTRICAL SAFETY CODE (NESC) STANDARDS;
10. INTERNATIONAL ORGANIZATION FOR STANDARDIZATION (ISO);
11. MINNESOTA STATE BUILDING CODE (MSBC);
12. MINNESOTA PLUMBING CODE 2012;
13. MINNESOTA MECHANICAL CODE 2015;
14. MINNESOTA ENERGY CODE 2015;
15. NATIONAL ELECTRICAL CODE (NEC);
16. NATIONAL ELECTRICAL MANUFACTURERS ASSOCIATIONS (NEMA) STANDARDS;
17. NATIONAL FIRE PROTECTION ASSOCIATION (NFPA) PUBLICATIONS

DESIGN CONDITIONS

DESIGN AREA	DESIGN TEMPERATURE (DEGREE F)			
	SUMMER		WINTER	
	DB	WB	DB	WB
INDOOR	75	XX	68	XX
AMBIENT	108	88	-40	XX

ABBREVIATIONS

ABV	ABOVE
AC	AIR CONDITIONING
ACU	AIR CONDITIONING UNIT
AFC	ABOVE FINISHED CEILING
AFF	ABOVE FINISHED FLOOR
AHU	AIR HANDLING UNIT
AP	ACCESS PANEL
APPROX	APPROXIMATE
ARCH	ARCHITECT ARCHITECTURAL
AS	AIR SEPARATOR
BD	BLOWDOWN
BFF	BELOW FINISHED FLOOR
BFV	BUTTERFLY VALVE
BG	BELOW GRADE
BHP	BRAKE HORSEPOWER
BEL, BLW	BELOW
BOD	BOTTOM OF DUCT ELEVATION A F F
BOP	BOTTOM OF PIPE ELEVATION A F F
BOT	BOTTOM
BTU	BRITISH THERMAL UNIT
BTUH	BTU PER HOUR
CA	COMPRESSED AIR
CC	COOLING COIL
CLG DIFF	CEILING DIFFUSER
CFH	CUBIC FEET PER HOUR
CFM	CUBIC FEET PER MINUTE
CI	CAST IRON
CL	CENTER LINE
CLG	CEILING
CPRSR	COMPRESSOR
COND	CONDENSATE
CONN	CONNECTION
CONSTR	CONSTRUCTION
CONT	CONTINUED, CONTINUOUS
CONTR	CONTRACTOR
COOL	COOLING
CU	CONDENSING UNIT
CUH	CABINET UNIT HEATER
DIFF	DIFFUSER
DR	DRAIN
DT	DRIP TRAP
DEMO	DEMOLITION
D	DIAMETER
DMPR	DAMPER
DN	DOWN
E	EAST
EA	EACH
EAT	ENTERING AIR TEMPERATURE
EF	EXHAUST FAN
ELEC	ELECTRIC
EL	ELEVATION
EUH	ELECTRIC UNIT HEATER
ENCL	ENCLOSURE
EXH RG	EXHAUST REGISTER
ESP	EXTERNAL STATIC PRESSURE
EXP T	EXPANSION TANK
EXH	EXHAUST
EXP	EXPANSION
EXST	EXISTING
FA	FREE AREA
FDMPR	FIRE DAMPER
F.F. EL	FINISHED FLOOR ELEVATION
FLR	FLOOR
FPM	FEET PER MINUTE
FRP	FIBERGLASS REINFORCED PIPE
FT	FOOT OR FEET
FUT	FUTURE
GA	GAUGE GAGE
GEN	GENERAL
GFCI	GROUND-FAULT CIRCUIT INTERRUPTER
GPM	GALLONS PER MINUTE
GR	GRADE GROUND
GRL	GRILLE
GV	GRAVITY VENT
H	HIGH, HEIGHT
HC	HEATING COIL
HD GR	HEAVY DUTY GRILLE
RHG	REFRIGERANT HOT GAS
HORIZ	HORIZONTAL
HTR	HEATER
H STAT	HUMIDISTAT
HVAC	HEAT VENTILLATION & AIR CONDITIONER
ID	INSIDE DIMENSION
IBS	IN BEAM SPACE
IJS	IN JOIST SPACE
I E	INVERT ELEVATION
RL	REFRIGERANT LIQUID
LAT	LEAVING AIR TEMPERATURE
L AV	LAVATORY
L B	POUND
L D	LINEAR DIFFUSER
LF	LINEAL FEET
LG	LONG OR LENGTH
LSD	LINEAR SLOT DIFFUSER
MAU	MAKE UP AIR UNIT
MAX	MAXIMUM
MBH	1000 BTU PER HOUR
MFG	MANUFACTURER
MIN	MINIMUM
MTR	MOTORIZED, MOTOR
N	NORTH
NO.	NUMBER
NTS	NOT TO SCALE
OA	OUTSIDE AIR
O.C.	ON CENTER
OD	OUTSIDE DIMENSION
OPNG	OPENING
ORD	OVERFLOW ROOF DRAIN
P	PUMP, PUMPED
PD	PRESSURE DIFFERENCE
PRV	POWER ROOF VENTILATOR
PRV	PRESSURE REGULATING VALVE
PSI	POUNDS PER SQUARE INCH
PSIG	PSI GAUGE
PVC	POLYVINYL CHLORIDE
RA	RETURN AIR
RAD	RADIATOR, RADIUS
RCP	REFLECTED CEILING PLAN
RCVR	RECEIVER
RET	RETURN
RD	ROOF DRAIN
RECIRC	RECIRCULATING
REQD	REQUIRED
RH	RELATIVE HUMIDITY
RHW	RECIRCULATING HOT WATER
RND	ROUND
RPM	REVOLUTIONS PER MINUTE
RTU	ROOFTOP UNIT
S	SOUTH
SA	SUPPLY AIR
SAD	SUPPLY AIR DUCT
SD	SLOT DIFFUSER
SF	SUPPLY FAN
SPLY	SUPPLY
SP	STATIC PRESSURE
SPEC	SPECIFICATION
SQ	SQUARE
SS	STAINLESS STEEL
STD	STANDARD
SYS	SYSTEM
T	THERMOSTAT, TEMPERATURE DIFF
TD	TEMPERATURE DIFF
TEMP	TEMPERATURE
XFR	TRANSFER
THRU	THROUGH
TO	TAKE OFF, TOP OF
TOD	TOP OF DUCT ELEVATION A F F
TOP	TOP OF PIPE ELEVATION A F F
T & P	TEMPERATURE AND PRESSURE
T STAT	THERMOSTAT
TST PR	TOTAL STATIC PRESSURE
TYP	TYPICAL
U F	UNDERFLOOR
UH	UNIT HEATER
UG	UNDERGROUND
VERT	VERTICAL
VFD	VARIABLE FREQUENCY DRIVE
W	WEST
WT	WEIGHT
W/	WITH
W /O	WITHOUT

NO.	DATE	BY	CHECK	DESIGN	REVISION / SUBMITTAL

AECOM

LV ENGINEERING • LLC CERTIFIED WOMEN'S BUSINESS ENTERPRISE

90% SUBMISSION - 01/22/16

METROPOLITAN COUNCIL

SOUTHWEST Green Line LRT Extension

CIVIL - VOLUME 11E
STATIONS
MECHANICAL SYMBOLS AND ABBREVIATIONS

DISCIPLINE: MECHANICAL

SHEET NAME: D0-MEC-GEN-001

SHEET 10 OF 111

Jan, 18 2016 12:50 pm Z:\Projects\AECOM SWLRT west\3400_ADC\CAD\OVERALL\MECHANICAL\D0-MEC-GEN-001.dwg By: craig

ONELINE OR CONTROL DIAGRAM	PLAN	DESCRIPTION
FRAME TRIP	CB	LOW VOLTAGE AIR OR MOLDED CASE CIRCUIT BREAKER, 3 POLE UNLESS OTHERWISE NOTED
*		COMBINATION MOTOR CIRCUIT PROTECTOR AND MAGNETIC MOTOR STARTER, FULL VOLTAGE NON-REVERSING UNLESS OTHERWISE NOTED: * FVR - FULL VOLTAGE REVERSING RVNR - REDUCED VOLTAGE NON-REVERSING 2S1W - TWO SPEED, ONE WINDING 2S2W - TWO SPEED, TWO WINDING
*	*	NON-FUSIBLE DISCONNECT SWITCH, 600 VOLT, 3 POLE AMPERE RATING NOTED IF OTHER THAN 30A
* *	* F	FUSIBLE DISCONNECT SWITCH, 600 VOLT, 3 POLE, AMPERE RATING AND FUSE SIZE AS NOTED AMPERE RATING NOTED IF OTHER THAN 30A FUSE RATING EXAMPLE 15
	P 2	MANUAL MOTOR STARTER WITH THERMAL OVERLOAD HEATER "P" INDICATES WITH PILOT LIGHT "2" INDICATES TWO POLE
480V △ TO 120/208Y 30 KVA K-*	T	TRANSFORMER, RATINGS AND CONNECTIONS AS NOTED. UNLESS OTHERWISE NOTED ON THE SINGLE LINE DIAGRAMS ALL DRY TYPE TRANSFORMERS SERVICING ADMINISTRATIVE AND LABORATORY SPACES SHALL HAVE A K FACTOR OF 13. ALL OTHER DRY TYPE TRANSFORMERS SHALL HAVE A K-4 RATING. ISOLATION TRANSFORMERS SHALL HAVE A K-20 RATING
* A TO 5	—	CURRENT TRANSFORMER * QUANTITY A = PRIMARY AMPERES
* V TO 120	—	POTENTIAL TRANSFORMER * QUANTITY V = PRIMARY VOLTAGE
	G	GENERATOR RECEPTACLE OR GENERATOR, RATINGS AND CONNECTIONS AS NOTED
100A MTS N S	—	MANUAL TRANSFER SWITCH NO. 1 (MTS-1) "N" INDICATES NORMAL SOURCE "S" INDICATES STANDBY SOURCE 100A INDICATES CONTINUOUS CURRENT RATING
5KW	E	UNIT HEATER - ELECTRIC HEATING COIL AND FAN
—	U	UNIT HEATER - STEAM OR WATER HEATING COIL AND FAN
5	M	MOTOR, NUMERAL INDICATES HORSEPOWER
*	—	SPECIAL CAPACITOR * SC - SURGE CAPACITOR PF - POWER FACTOR CORRECTION CAPACITOR
	—	PUSHBUTTON, MOMENTARY CONTACT, SPRING RETURN, NORMALLY CLOSED
	—	PUSHBUTTON, MOMENTARY CONTACT, SPRING RETURN, NORMALLY OPEN

ONELINE OR CONTROL DIAGRAM	PLAN	DESCRIPTION
	—	CONDUCTORS OR CONDUITS CROSSING PATHS BUT NOT CONNECTED
	—	CONDUCTORS ELECTRICALLY CONNECTED
DM	—	DAMPER MOTOR
*	—	PILOT LIGHT, COLOR AS NOTED R - RED G - GREEN B - BLUE W - WHITE A - AMBER
PTT OR	—	PILOT LIGHT, PUSH-TO-TEST TYPE, COLOR AS NOTED ABOVE
LA	—	LIGHTNING ARRESTER
		GROUND OR GROUND ROD
30A	—	FUSE, AMPERE RATING AS NOTED
—		HEAT TRACE CABLE
		STRIP HEATER OR HEATING ELEMENT
	—	CONTACT, NORMALLY OPEN (NO)
	—	CONTACT, NORMALLY CLOSED (NC)
CR #	—	CONTROL RELAY COIL, NUMBER AS INDICATED
TD	—	TIME DELAY RELAY RANGE AS NOTED SETPOINT AS NOTED TDE-TIME DELAY AFTER ENERGIZATION-ON DELAY TDD-TIME DELAY AFTER DE-ENERGIZATION-OFF DELAY NOTC-NORMALLY OPEN, TIMED CLOSING WHEN ENERGIZED NCTO-NORMALLY CLOSED, TIMED OPENING WHEN ENERGIZED NOTO-NORMALLY OPEN, TIMED OPENING WHEN DE-ENERGIZED NCTC-NORMALLY CLOSED, TIMED CLOSING WHEN DE-ENERGIZED
	TS OR T OR *	TEMPERATURE SWITCH OR THERMOSTAT NORMALLY OPEN, CLOSES ON RISING TEMPERATURE NORMALLY OPEN, CLOSES ON DROPPING TEMPERATURE NORMALLY CLOSED, OPENS ON RISING TEMPERATURE NORMALLY CLOSED, OPENS ON DROPPING TEMPERATURE
	—	INDICATES LIMITS OF EQUIPMENT OR WIRING ENCLOSURE

ELECTRICAL ABBREVIATIONS

AC	ALTERNATING CURRENT
AFF	ABOVE FINISHED FLOOR
AFG	ABOVE FINISHED GRADE
A,AMP	AMPERE
AUTO	AUTOMATIC
AUX	AUXILIARY
AWG	AMERICAN WIRE GAUGE
C	CONDUIT
CAR	COUNCIL AUTHORIZED REPRESENTATIVE
CB	CIRCUIT BREAKER
CKT	CIRCUIT
CPT	CONTROL POWER TRANSFORMER
CR	CONTROL RELAY
CS	CONTROL SWITCH
CT	CURRENT TRANSFORMER
CU	COPPER
DC	DIRECT CURRENT
DI	DOOR INTERLOCK
DN	DOWN
EC	EMPTY CONDUIT
ELEC	ELECTRICAL
ELEV	ELEVATION
EM	EMERGENCY
FBO	FURNISHED BY OTHERS
FO	FIBER OPTIC
FU	FUSE
GCP	GENERATOR CONTROL PANEL
GEC	GROUNDING ELECTRODE CONDUCTOR
GEN	GENERATOR
G,GRD	GROUND
GF	GROUND FAULT INTERRUPTER
GRS	GALVANIZED RIGID STEEL
HH	HANDHOLE
HPB	HEATER PUSH BUTTON
HT	HEIGHT
HTR	HEATER
HZ	HERTZ
INST	INSTANTANEOUS
KSK	KIOSK
LA	LIGHTNING ARRESTER
LGTS	LIGHTS
LP	LIGHTING PANEL
MCC	MOTOR CONTROL CENTER
MFR	MANUFACTURER
MH	MANHOLE
MTG	MOUNTING
MTD	MOUNTED
MTS	MANUAL TRANSFER SWITCH
NC	NORMALLY CLOSED
NO	NORMALLY OPEN OR NUMBER
NOM	NOMINAL
NTS	NOT TO SCALE
OL	OVERLOAD
PH	PHASE
P,POL	POLE
PR	PAIR
PT	POTENTIAL TRANSFORMER
PVC	POLYVINYL CHLORIDE
QTY	QUANTITY
REC	RECEPTACLE
SC	SURGE CAPACITOR
SCR	STATION COMMUNICATIONS ROOM
SEC	SECONDS OR SECONDARY
SER	STATION ELECTRICAL ROOM
SH	SHIELDED OR SHEET
SN	SOLID NEUTRAL
SS	STAINLESS STEEL

ELEC ABBREVIATIONS CONT.

SW	SWITCH
SWGR	SWITCHGEAR
TC	TIME DELAY ON CLOSING
TEL	TELEPHONE
TO	TIME DELAY ON OPENING
TVM	TICKET VENDING MACHINE
TW	TWISTED
TYP	TYPICAL
UG	UNDERGROUND
V	VOLTS
W	WIRE
WP	WEATHERPROOF
XFMR	TRANSFORMER

NOTES

1. HOMERUNS SHOWN CONCEALED SHALL BE INDICATIVE OF ENTIRE CIRCUIT INSTALLATION. THE SAME SHALL APPLY FOR HOMERUNS SHOWN EXPOSED. REFER TO SPECIFICATIONS FOR MATERIALS AND INSTALLATION REQUIREMENTS.

2. CONDUIT AND WIRE (NOT SHOWN) FOR FIXTURES, SWITCHES AND/OR RECEPTACLES SHALL BE FURNISHED AND INSTALLED BY THE CONTRACTOR AND SHALL BE:

   2.1. 1" (MIN.) CONDUIT RUN
   2.2. EXPOSED IN UNFINISHED AREAS.
   2.3. CONCEALED ABOVE HUNG CEILINGS AND IN WALLS IN FINISHED AREAS.
   2.4. NO. 12 COPPER (MIN.) TYPE "THWN/THHN" NO. OF WIRES REQUIRED.

3. THE WIRING DIAGRAMS, QUANTITY AND SIZE OF WIRES AND CONDUIT REPRESENT A SUGGESTED ARRANGEMENT BASED UPON SELECTED STANDARD COMPONENTS OF ELECTRICAL EQUIPMENT. MODIFICATIONS ACCEPTABLE TO THE CAR MAY BE MADE BY THE CONTRACTOR TO ACCOMODATE EQUIPMENT ACTUALLY PURCHASED. THE BASIC SEQUENCE AND METHOD OF CONTROL MUST BE MAINTAINED AS INDICATED ON THE DRAWINGS AND/OR SPECIFICATIONS.

4. SWITCHES SHALL BE MOUNTED 4'-0" ABOVE FINISHED FLOOR UNLESS OTHERWISE NOTED. RECEPTACLES SHALL BE MOUNTED 4'-0" ABOVE FINISHED FLOOR UNLESS OTHERWISE NOTED, EXCEPT RECEPTACLES IN OFFICES OR AREAS WITH HUNG CEILINGS, WHICH SHALL BE MOUNTED 1'-6" ABOVE FINISHED FLOOR UNLESS OTHERWISE NOTED.

NO.	DATE	BY	CHECK	DESIGN	REVISION / SUBMITTAL

AECOM

M-P Consultants
CONSULTING ENGINEERING
MINNEAPOLIS • MINNESOTA

90% SUBMISSION - 01/22/16

METROPOLITAN COUNCIL

SOUTHWEST Green Line LRT Extension

CIVIL - VOLUME 11E
ELECTRICAL
SYMBOLS AND ABBREVIATIONS
1 OF 2

DISCIPLINE: ELECTRICAL

SHEET NAME: D0-ELE-GEN-001

SHEET 11 OF 111

Jan, 20 2016 06:58 am V:\3400_ADC\CAD\OVERALL\PLAN SHEETS\ELECTRICAL\ELE-GEN-001.dwg By: V-Begeal

SYMBOL	DESCRIPTION
A 3 b	LED, COMPACT FLUORESCENT OR H.I.D. TYPE LUMINAIRE "A" - LUMINAIRE TYPE "b" - CONTROLLED BY SWITCH "b" "3" - CIRCUIT NUMBER
A 3 b	LED OR FLUORESCENT TYPE LUMINAIRE, NOTATIONS SAME AS ABOVE
A 3 b	WALL OUTLET AND LED, COMPACT FLUORESCENT OR H.I.D. TYPE LUMINAIRE, NOTATIONS SAME AS ABOVE
A	EMERGENCY LIGHTING BATTERY UNIT WITH TWO LAMP HEADS "A" - LUMINAIRE TYPE
	CEILING MOUNTED EXIT SIGN
	WALL OUTLET EXIT SIGN. ARROW INDICATES DIRECTION OF EGRESS
E	REMOTE EMERGENCY CEILING LUMINAIRE
E	REMOTE EMERGENCY WALL LUMINAIRE
A 1	POLE MOUNTED LUMINAIRE "A" - LUMINAIRE TYPE "1" - CIRCUIT NUMBER
	BRANCH CIRCUIT CONDUIT WITH 2 NO. 12 AWG BRANCH CIRCUIT CONDUCTORS AND 1 NO. 12 AWG GROUND CONDUCTOR INSTALLED EXPOSED. FOR MINIMUM SIZE CONDUIT PERMITTED REFER TO THE SPECIFICATIONS.
	BRANCH CIRCUIT CONDUIT WITH 2 NO. 12 AWG BRANCH CIRCUIT CONDUCTORS AND 1 NO. 12 AWG GROUND CONDUCTOR INSTALLED CONCEALED. FOR MINIMUM SIZE CONDUIT PERMITTED REFER TO THE SPECIFICATIONS.
	BRANCH CIRCUIT CONDUIT INSTALLED EXPOSED TURNING UP. CONDUIT TO CONTAIN 2 NO. 12 AWG BRANCH CIRCUIT CONDUCTORS AND 1 NO. 12 AWG GROUND CONDUCTOR. FOR MINIMUM SIZE CONDUIT PERMITTED REFER TO THE SPECIFICATIONS.
	BRANCH CIRCUIT CONDUIT INSTALLED EXPOSED TURNING DOWN. CONDUIT TO CONTAIN 2 NO. 12 AWG BRANCH CIRCUIT CONDUCTORS AND 1 NO. 12 AWG GROUND CONDUCTOR. FOR MINIMUM SIZE CONDUIT PERMITTED REFER TO THE SPECIFICATIONS.
	BRANCH CIRCUIT CONDUIT INSTALLED CONCEALED TURNING UP. CONDUIT TO CONTAIN 2 NO. 12 AWG BRANCH CIRCUIT CONDUCTORS AND 1 NO. 12 AWG GROUND CONDUCTOR. FOR MINIMUM SIZE CONDUIT PERMITTED REFER TO THE SPECIFICATIONS.
	BRANCH CIRCUIT CONDUIT INSTALLED CONCEALED TURNING DOWN. CONDUIT TO CONTAIN 2 NO. 12 AWG BRANCH CIRCUIT CONDUCTORS AND 1 NO. 12 AWG GROUND CONDUCTOR. FOR MINIMUM SIZE CONDUIT PERMITTED REFER TO THE SPECIFICATIONS.
	CONDUIT STUBBED OUT AND CAPPED
2(3"C., 3#3/0 & 1#2 GRD.)	DENOTES A QUANTITY OF TWO (2) 3-INCH CONDUITS EACH CONTAINING THREE NO. 3/0 AWG CONDUCTORS AND 1 NO. 2 AWG GROUND CONDUCTOR
	FLEXIBLE METAL CONDUIT "WHIP" FOR RECESSED LIGHTING FIXTURES AND LIQUID TIGHT MOTOR CONNECTIONS

SYMBOL	DESCRIPTION
1,3 LP-1	HOMERUN, CIRCUITS 1 AND 3 RUN TO PANEL LP-1
BU-1	HOMERUN TO EMERGENCY BATTERY UNIT BU-1
TM	HOMERUN TO TELEPHONE BACKBOARD
2-2/C#16TS	DENOTES A QUANTITY OF TWO INSTRUMENT CABLES. EACH CABLE TO CONSIST OF TWO NO. 16 AWG CONDUCTORS TWISTED TOGETHER AND COVERED WITH A METALLIC SHIELD AND AN OVERALL PROTECTIVE JACKET. REFER TO THE SPECIFICATIONS FOR THE EXACT CABLE TO BE PROVIDED.
2-3/C#16TS	SAME AS ABOVE EXCEPT CABLE TO CONSIST OF THREE NO. 16 AWG CONDUCTORS TWISTED, SHIELDED AND COVERED WITH AN OVERALL PROTECTIVE JACKET. REFER TO THE SPECIFICATIONS FOR THE EXACT CABLE TO BE PROVIDED.
3(4"C)	THREE 4-INCH CONDUITS
	"T" FITTING IN CONDUIT
$b	SINGLE POLE SWITCH "b" INDICATES SWITCHLEG SHALL CONTROL LIGHT FIXTURES WITH "b" DESIGNATION
$ M	SINGLE POLE, DOUBLE THROW MOMENTARY CONTACT SWITCH, CENTER OFF
$ P	SINGLE POLE SWITCH AND PILOT LIGHT
D	DIMMER LIGHTING CONTROL SWITCH
C	LIGHTING CONTACTOR WITH NUMBER OF POLES AS INDICATED
TM	TIME SWITCH
OR LP-** LP-**	LIGHTING PANELBOARD
OR DP-** DP-**	DISTRIBUTION PANELBOARD
* 4	DUPLEX RECEPTACLE, 20A, 120V, 2P, 3W * C - MOUNTED ABOVE COUNTER-TOP GF - GROUND FAULT INTERRUPTER TYPE WP - WEATHERPROOF T - TRANSIENT VOLTAGE SURGE SUPPRESSOR 4 - CIRCUIT NUMBER
	20A, 240V, 2P, 3W, RECEPTACLE
J J	JUNCTION BOX
P	PULL BOX
OS	OCCUPANCY SENSOR
PC	PHOTOCELL
HH	HANDHOLE

SYMBOL	DESCRIPTION
DAMP	INDICATES THAT ALL ELECTRICAL EQUIPMENT AND MATERIALS INSTALLED WITHIN THE ROOM OR AREA IN WHICH THIS NOTATION APPEARS SHALL BE OF NEMA 12 CONSTRUCTION (OR GASKETED AND SUITABLE FOR USE IN A DAMP LOCATION WHERE NEMA STANDARDS DO NOT APPLY) UNLESS OTHERWISE NOTED.
WET	INDICATES THAT ALL ELECTRICAL EQUIPMENT AND MATERIALS INSTALLED WITHIN THE ROOM OR AREA IN WHICH THIS NOTATION APPEARS SHALL BE OF NEMA 4 CONSTRUCTION (OR GASKETED AND SUITABLE FOR USE IN A WET LOCATION WHERE NEMA STANDARDS DO NOT APPLY) UNLESS OTHERWISE NOTED.
CORROSIVE	INDICATES THAT ALL ELECTRICAL EQUIPMENT AND MATERIALS INSTALLED WITHIN THE ROOM OR AREA IN WHICH THIS NOTATION APPEARS SHALL BE OF NEMA 4X CONSTRUCTION (OR CORROSION RESISTANT CONSTRUCTION SUITABLE FOR USE IN A CORROSIVE LOCATION WHERE NEMA STANDARDS DO NOT APPLY) UNLESS OTHERWISE NOTED.
FIRE ALARM SYSTEMS	
R/C 200	FIRE ALARM HEAT DETECTOR 135°F FIXED TEMPERATURE UNLESS OTHERWISE NOTED. "200" DENOTES 200°F TYPE, "R" DENOTES FIXED TEMPERATURE RATE-OF-RISE TYPE.
S I	FIRE ALARM SMOKE DETECTOR PHOTOCELL TYPE UNLESS OTHERWISE NOTED. "I" DENOTES IONIZATION TYPE.
S	FIRE ALARM DUCT SMOKE DETECTOR
FACP	FIRE ALARM CONTROL PANEL
FA	REMOTE FIRE ALARM ANNUNCIATOR PANEL
F	FIRE ALARM MASTER BOX
F	FIRE ALARM HORN, MOUNT UP 7'-6"
F	FIRE ALARM STROBE, MOUNT UP 6'-8"
F	FIRE ALARM HORN AND STROBE LIGHT COMBINATION, MOUNT UP 6'-8"
	FIRE ALARM MANUAL PULL STATION, MOUNT UP 4'-0"
F	FIRE ALARM BELL
S FB	WEATHERPROOF HI-INTENSITY FIRE ALARM STROBE LIGHT

SYMBOL	DESCRIPTION
COMMUNICATIONS SYSTEMS	
K	TELEPHONE HANDSET, DESK TYPE K = KEY SYSTEM
K	TELEPHONE HANDSET, WALL TYPE K = KEY SYSTEM
	PAGE/PARTY TELEPHONE HANDSET, DESK TYPE
	PAGE/PARTY TELEPHONE HANDSET, WALL TYPE (MOUNT UP 4'-6")
S H1,H2 W	PAGING SPEAKER, WALL MOUNTED "H1, H2" DENOTES HORN TYPE "W" DENOTES WIDE ANGLE TYPE
H S	PAGING SPEAKER, WALL MOUNTED, BI-DIRECTIONAL H = HORN TYPE
S	PAGING SPEAKER, FLUSH MOUNTED CEILING TYPE
S	PAGING SPEAKER, SURFACE MOUNTED CEILING TYPE
VC	REMOTE WALL MOUNTED VOLUME CONTROL FOR CEILING SPEAKER (MOUNT UP 5'-0")
A	PAGING SPEAKER AMPLIFIER ASSEMBLY
TM	TELEPHONE CABINET OR BACKBOARD AS NOTED
P	DATA INPUT/OUTPUT CABLE OUTLET "P" DENOTES PROCESS COMPUTER SYSTEM
SECURITY SYSTEMS	
SA	SECURITY ALARM PANEL
DS	SECURITY ALARM DOOR SWITCH
K	SECURITY ALARM KEY PAD
R	SECURITY SYSTEM CARD ACCESS READER
	SECURITY ALARM MOTION DETECTOR
CCTV	CLOSED CIRCUIT TV CAMERA

NO.	DATE	BY	CHECK	DESIGN	REVISION / SUBMITTAL

AECOM

M-P Consultants
CONSULTING ENGINEERING
MINNEAPOLIS • MINNESOTA

90% SUBMISSION - 01/22/16

METROPOLITAN COUNCIL

SOUTHWEST Green Line LRT Extension

CIVIL - VOLUME 11E
ELECTRICAL
SYMBOLS AND ABBREVIATIONS
2 OF 2

DISCIPLINE: ELECTRICAL

SHEET NAME: D0-ELE-GEN-002

SHEET 12 OF 111

Jan. 20 2016 06:59 am V:\3400_ADC\CAD\OVERALL\PLAN SHEETS\ELECTRICAL\ELE-GEN-002.dwg By: V-BegeJB

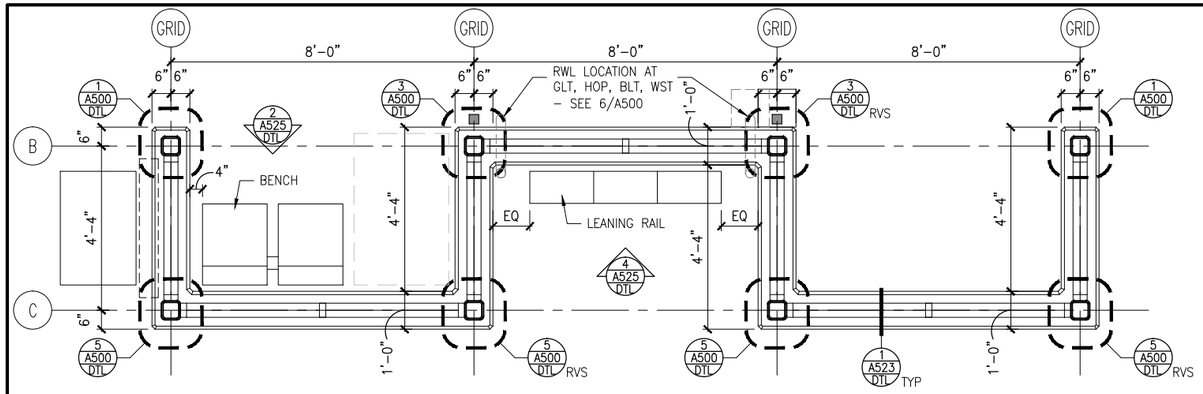

1 TYPICAL ENLARGED PLAN AT SHELTERS
SCALE: 1/4"=1'-0"

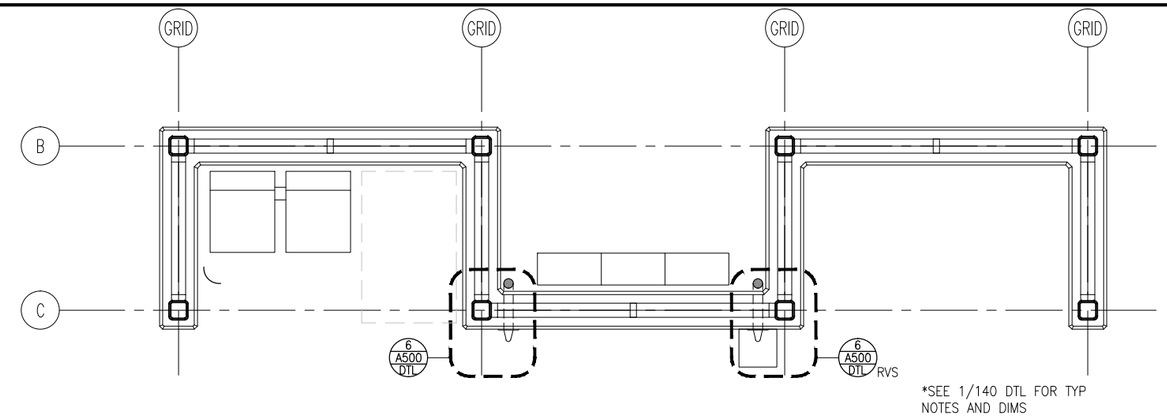

4 ENLARGED PLAN AT SHELTERS
SCALE: 1/4"=1'-0"

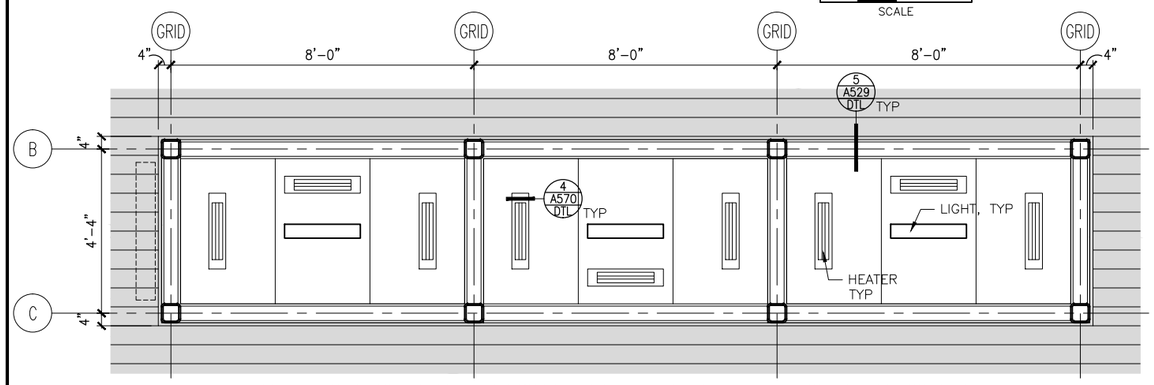

2 ENLARGED REFLECTED CEILING PLAN AT SHELTERS
SCALE: 1/4"=1'-0"

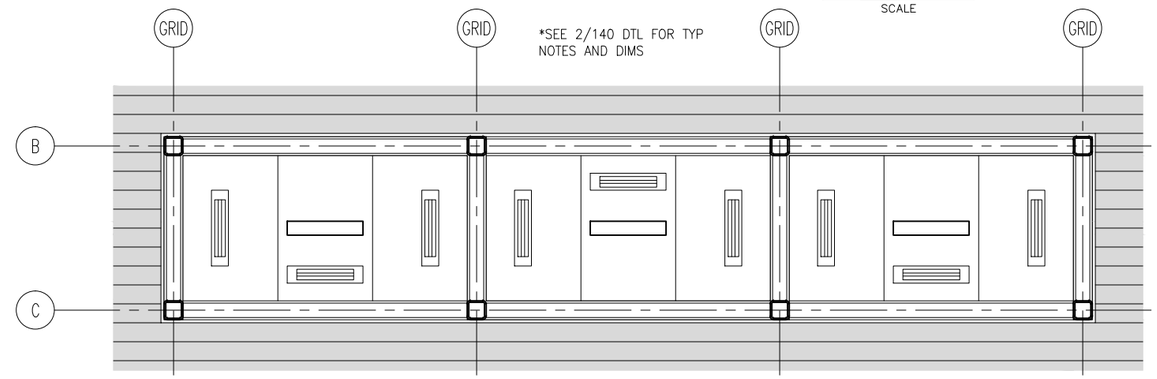

5 ENLARGED REFLECTED CEILING PLAN AT SHELTERS
SCALE: 1/4"=1'-0"

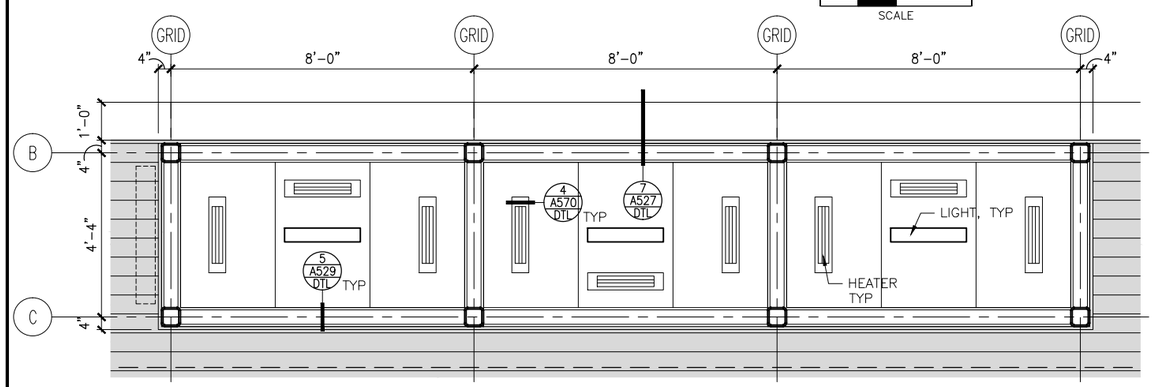

3 ENLARGED REFLECTED CEILING PLAN AT SHELTERS
SCALE: 1/4"=1'-0"

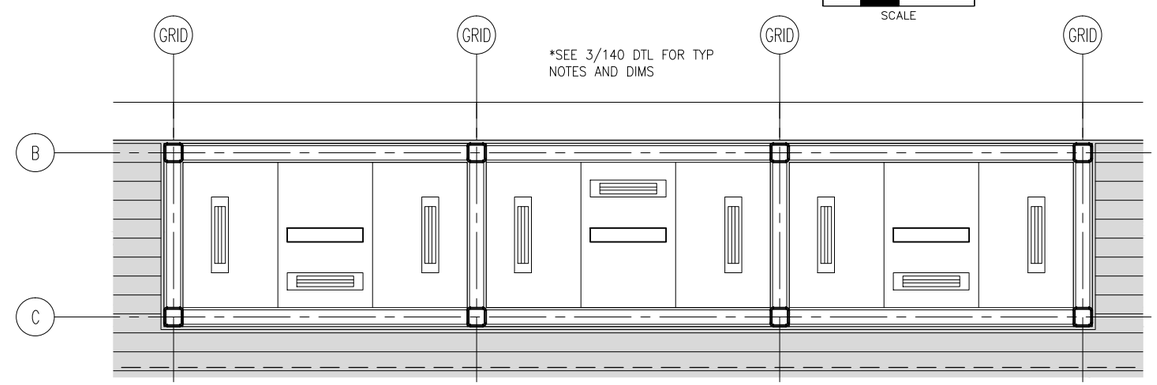

6 ENLARGED REFLECTED CEILING PLAN AT SHELTERS
SCALE: 1/4"=1'-0"

NO.	DATE	BY	CHECK	DESIGN	REVISION / SUBMITTAL

AECOM

90% SUBMISSION - 01/22/16

METROPOLITAN COUNCIL

SOUTHWEST Green Line LRT Extension

CIVIL - VOLUME 11E
STATIONS COMMON DETAILS
ENLARGED PLANS

DISCIPLINE: ARCHITECTURE

SHEET NAME: D0-ARC-DTL-140

SHEET 13 OF 111

Jan, 18 2016 11:29 am V:\3400_ADC\CAD\OVERALL\plan sheets\architecture\D0-ARC-DTL-140.dwg By: v-mccartp

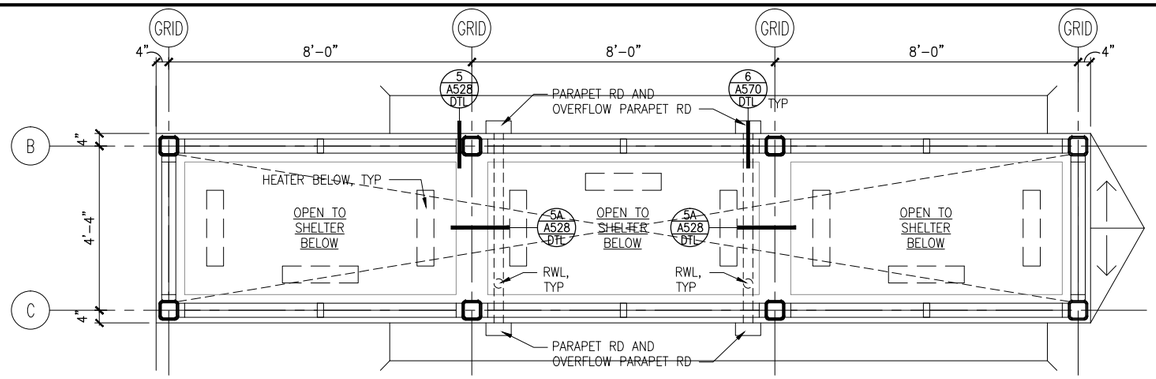

1 ENLARGED PLAN AT CLERESTORY
SCALE: 1/4"=1'-0"

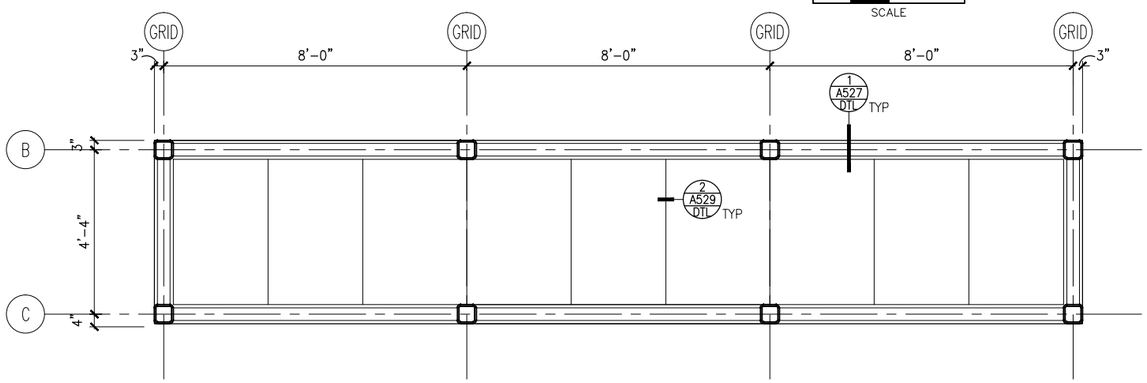

2 ENLARGED REFLECTED CEILING PLAN AT CLERESTORY
SCALE: 1/4"=1'-0"

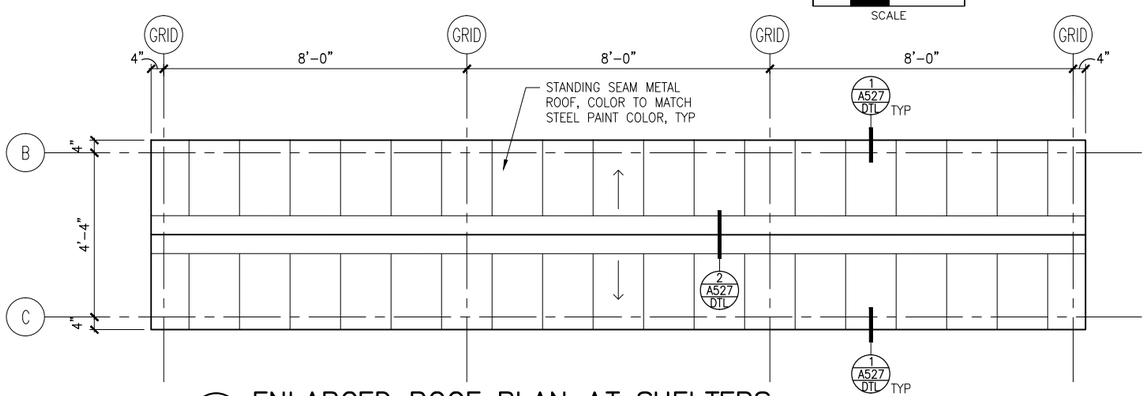

3 ENLARGED ROOF PLAN AT SHELTERS
SCALE: 1/4"=1'-0"

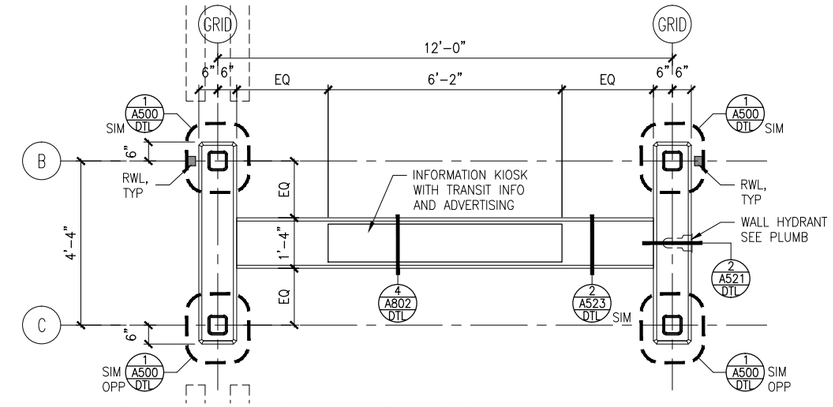

4 ENLARGED PLAN AT KIOSK
SCALE: 1/4"=1'-0"

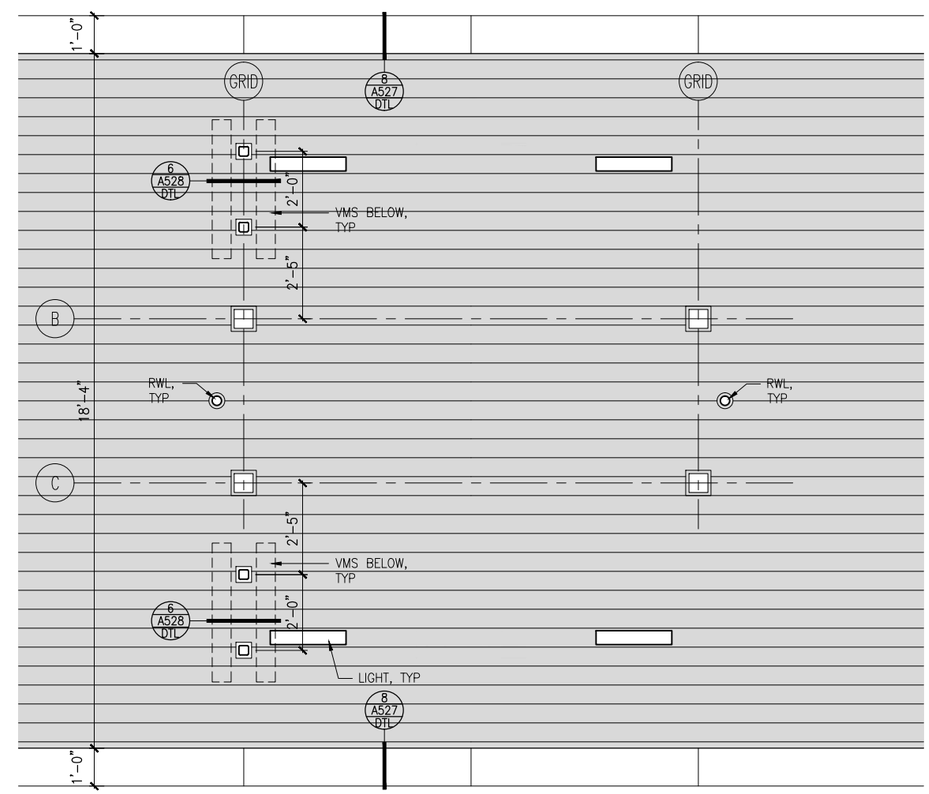

5 ENLARGED REFLECTED CEILING PLAN AT KIOSK
SCALE: 1/4"=1'-0"

NO.	DATE	BY	CHECK	DESIGN	REVISION / SUBMITTAL

AECOM

90% SUBMISSION - 01/22/16

METROPOLITAN COUNCIL

SOUTHWEST Green Line LRT Extension

CIVIL - VOLUME 11E
STATIONS COMMON DETAILS
ENLARGED PLANS

DISCIPLINE: ARCHITECTURE

SHEET NAME: D0-ARC-DTL-141

SHEET 14 OF 111

Jan. 18 2016 11:29 am V:\3400_ADC\CAD\OVERALL\plan sheets\architecture\D0-ARC-DTL-141.dwg By: v-mccarrtp

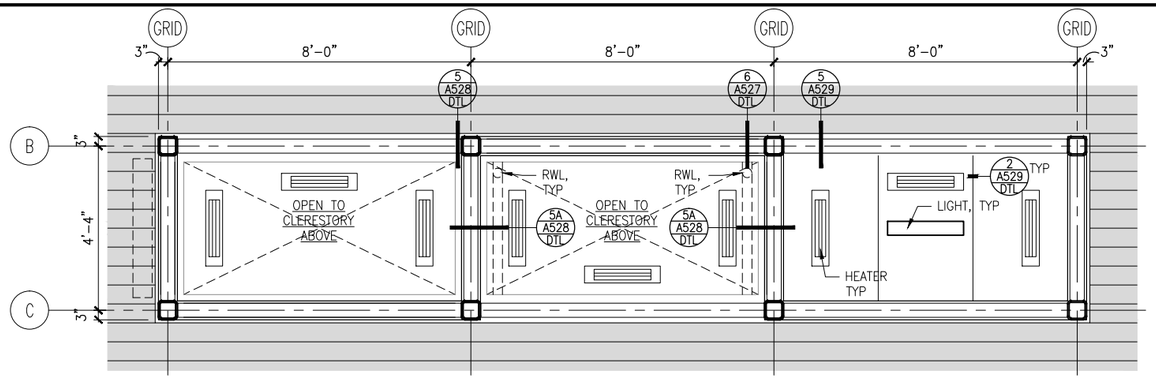

1 ENLARGED REFLECTED CEILING PLAN AT LOWER RCP
SCALE: 1/4"=1'-0"

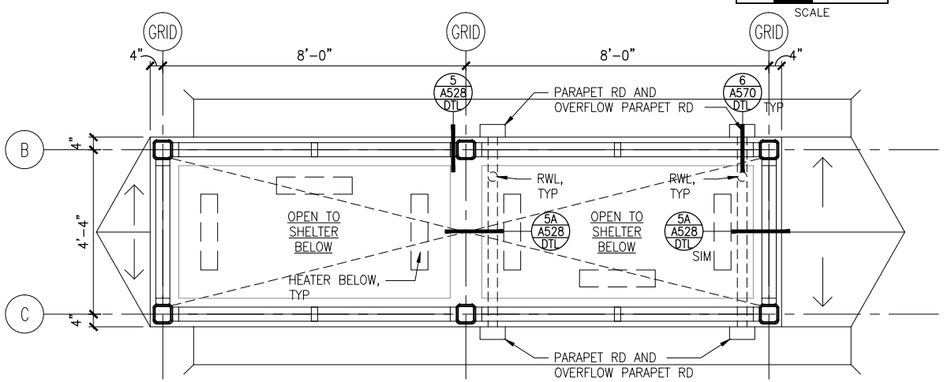

2 ENLARGED PLAN AT CLERESTORY
SCALE: 1/4"=1'-0"

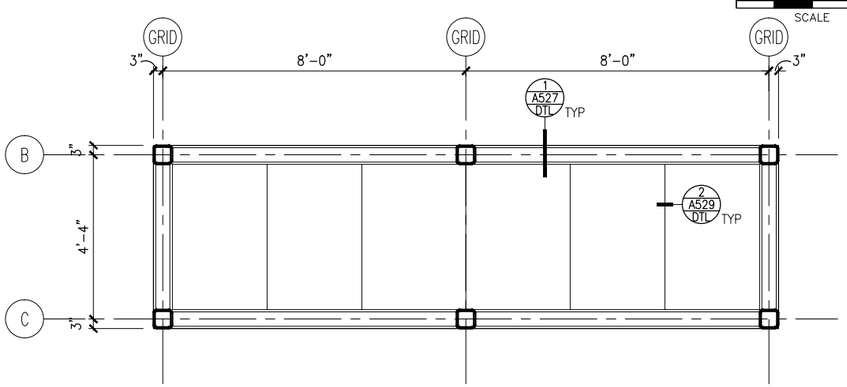

3 ENLARGED REFLECTED CEILING PLAN AT UPPER RCP
SCALE: 1/4"=1'-0"

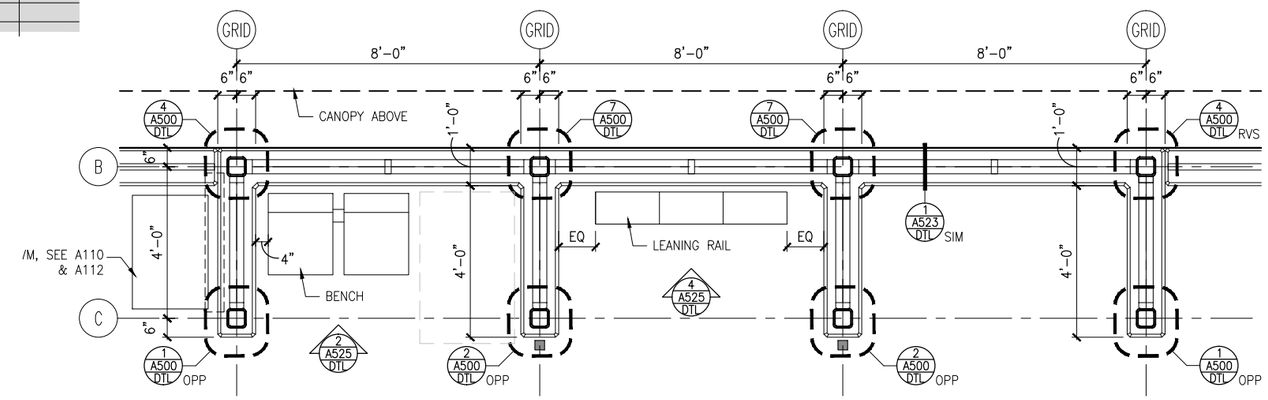

4 ROYALSTON STATION
ENLARGED PLAN AT SHELTERS
SCALE: 1/4"=1'-0"

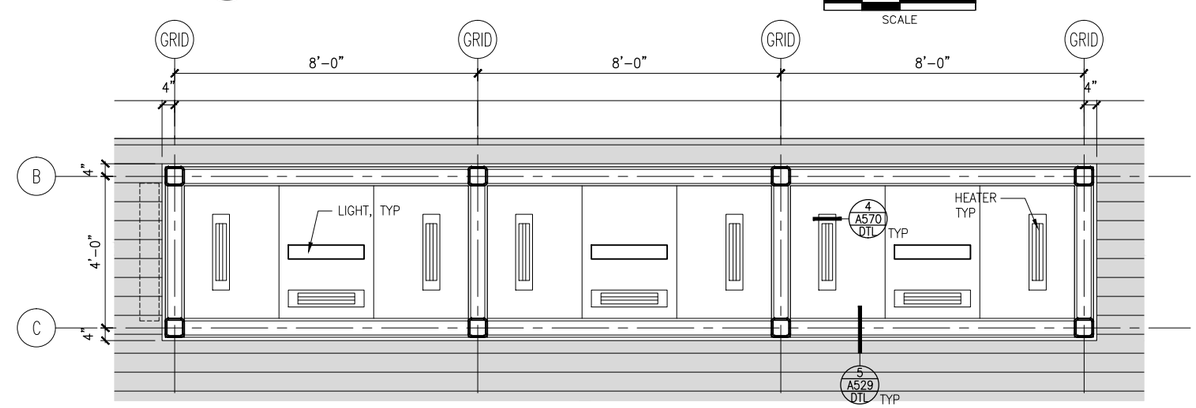

5 ROYALSTON STATION
ENLARGED REFLECTED CEILING PLAN AT SHELTERS
SCALE: 1/4"=1'-0"

NO.	DATE	BY	CHECK	DESIGN	REVISION / SUBMITTAL

AECOM

90% SUBMISSION - 01/22/16

METROPOLITAN COUNCIL

SOUTHWEST Green Line LRT Extension

CIVIL - VOLUME 11E
STATIONS COMMON DETAILS
ENLARGED PLANS

DISCIPLINE: ARCHITECTURE

SHEET NAME: D0-ARC-DTL-142

SHEET 15 OF 111

Jan, 18 2016 11:30 am V:\3400_ADC\CAD\OVERALL\plan sheets\architecture\D0-ARC-DTL-142.dwg By: v-mccarrtp

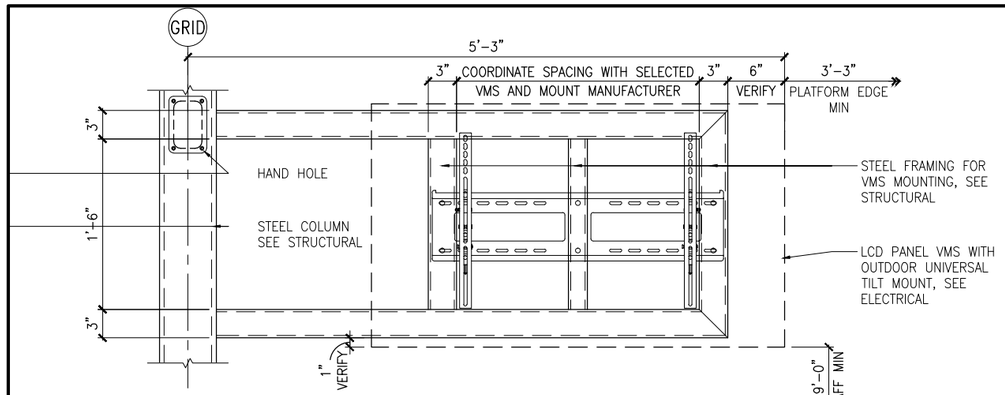

6 ELEVATION DETAIL AT VMS MOUNT

SCALE: 3/4"=1'-0"

0 4" 8" 1'-4" SCALE

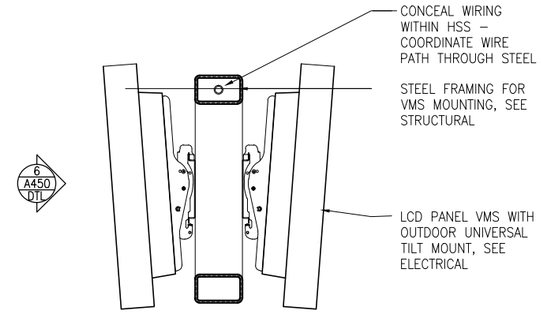

5 SECTION DETAIL AT VMS MOUNT

SCALE: 3/4"=1'-0"

0 4" 8" 1'-4" SCALE

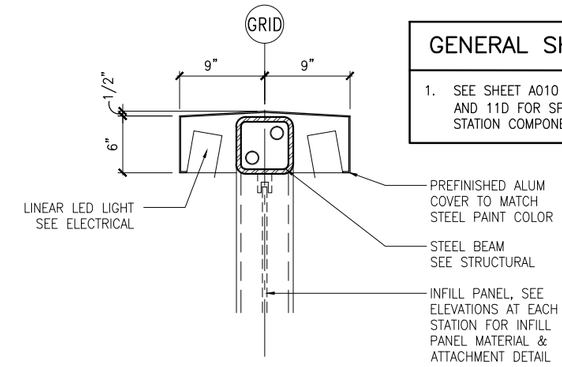

4 SECTION DETAIL AT STEEL WICKET

SCALE: 3/4"=1'-0"

0 4" 8" 1'-4" SCALE

GENERAL SHEET NOTES

1. SEE SHEET A010 IN VOLUMES 11B, 11C, AND 11D FOR SPECIFIC FINISH/COLOR AT STATION COMPONENTS

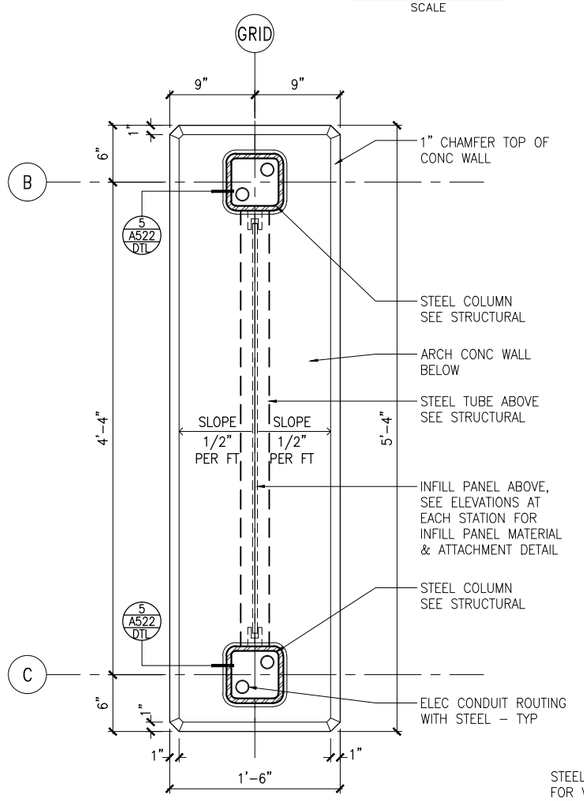

3 PLAN DETAIL AT STEEL WICKET

SCALE: 3/4"=1'-0"

0 4" 8" 1'-4" SCALE

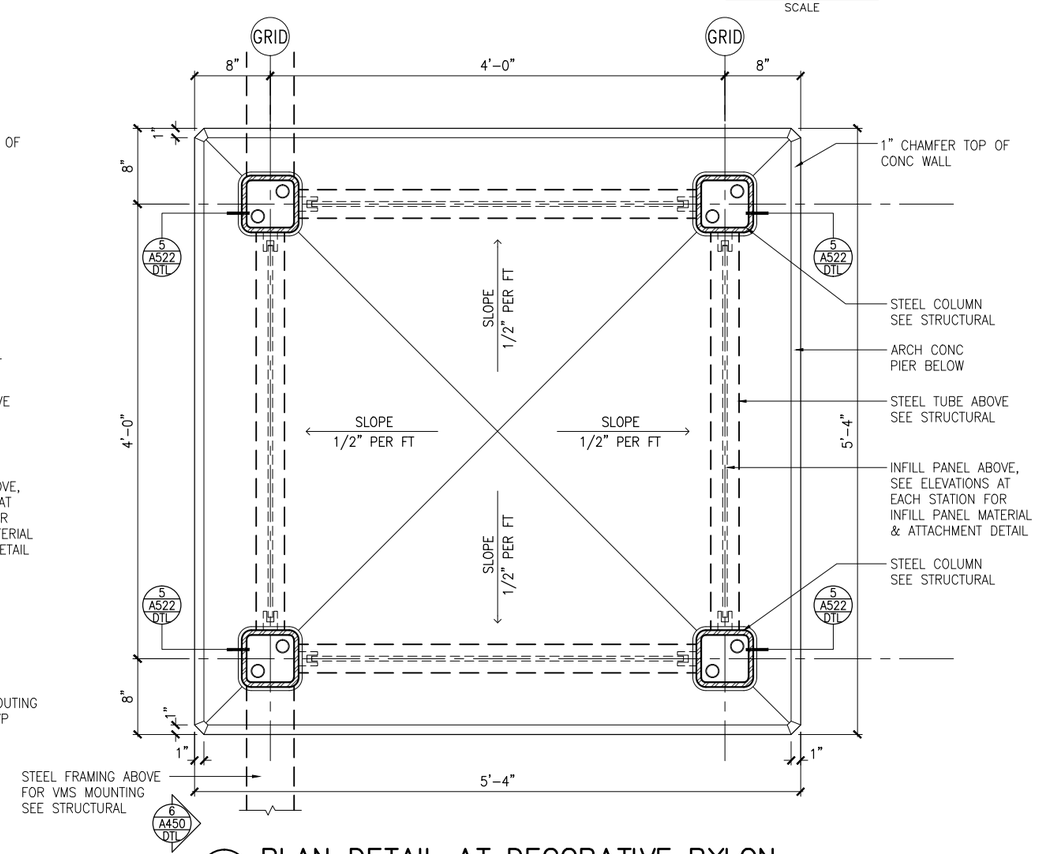

2 PLAN DETAIL AT DECORATIVE PYLON

SCALE: 3/4"=1'-0"

0 4" 8" 1'-4" SCALE

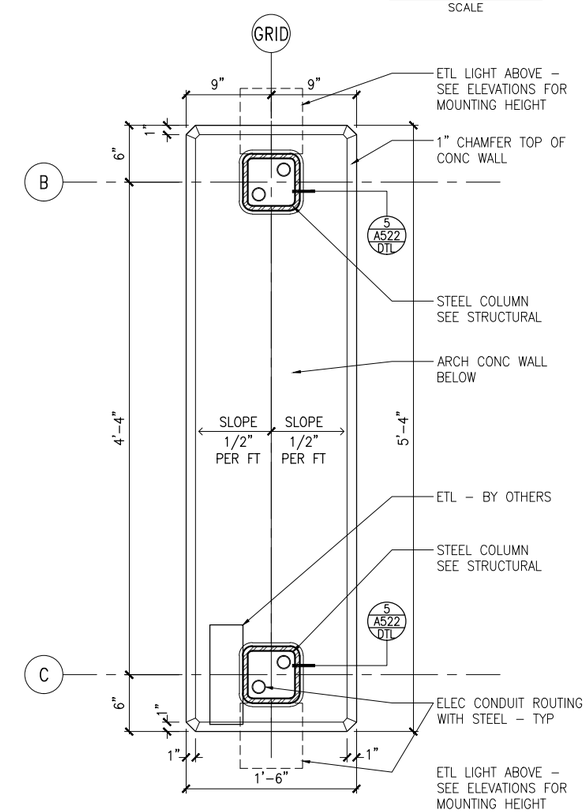

1 PLAN DETAIL AT EMERGENCY TELEPHONE

SCALE: 3/4"=1'-0"

0 4" 8" 1'-4" SCALE

NO.	DATE	BY	CHECK	DESIGN	REVISION / SUBMITTAL
.	.	.	.	.	.

AECOM

90% SUBMISSION - 01/22/16

METROPOLITAN COUNCIL

SOUTHWEST Green Line LRT Extension

CIVIL - VOLUME 11E
STATIONS COMMON DETAILS
LIGHT POLE DETAILS

DISCIPLINE: ARCHITECTURE

SHEET NAME: D0-ARC-DTL-450

SHEET 16 OF 111

Jan, 18 2016 11:30 am V:\3400_ADC\CAD\OVERALL\plan sheets\architecture\D0-ARC-DTL-450.dwg By: v-mccarrtp

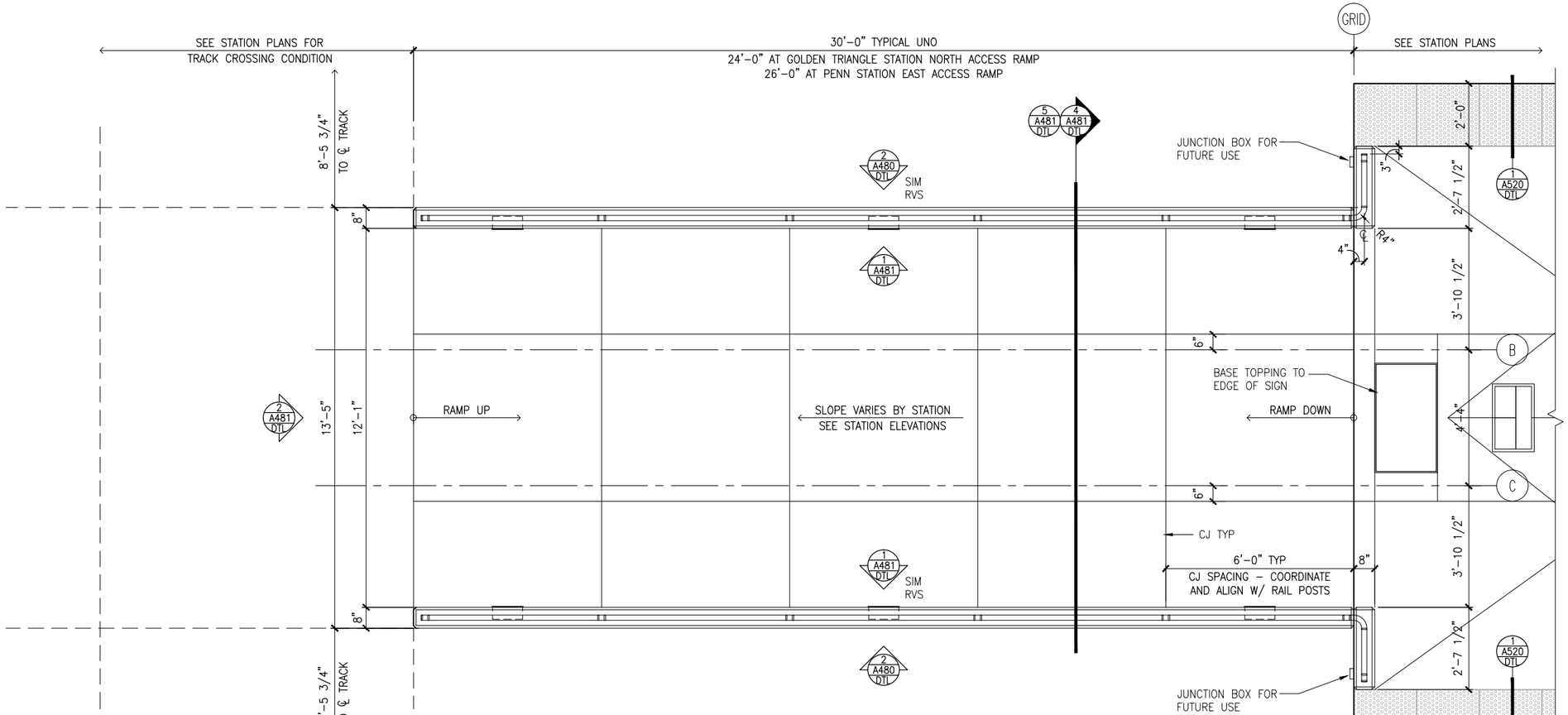

1 ENLARGED PLAN AT TYPICAL CENTER PLATFORM ACCESS RAMP
SCALE: 1/4"=1'-0"

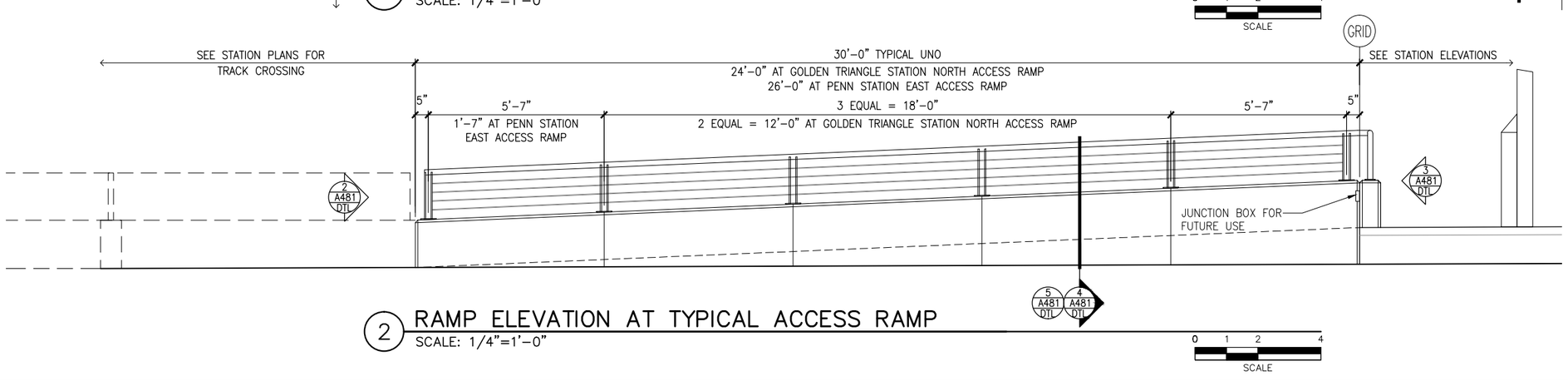

2 RAMP ELEVATION AT TYPICAL ACCESS RAMP
SCALE: 1/4"=1'-0"

GENERAL SHEET NOTES

1. SEE SHEET A010 IN VOLUMES 11B, 11C, AND 11D FOR SPECIFIC FINISH/COLOR AT STATION COMPONENTS

NO.	DATE	BY	CHECK	DESIGN	REVISION / SUBMITTAL

AECOM

90% SUBMISSION - 01/22/16

METROPOLITAN COUNCIL

SOUTHWEST Green Line LRT Extension

CIVIL - VOLUME 11E
STATIONS COMMON DETAILS
RAMP DETAILS

DISCIPLINE: ARCHITECTURE

SHEET NAME: D0-ARC-DTL-480

SHEET 17 OF 111

Jan, 18 2016 11:31 am V:\3400_ADC\CAD\OVERALL\plan sheets\architecture\D0-ARC-DTL-480.dwg By: v-mccarrtp

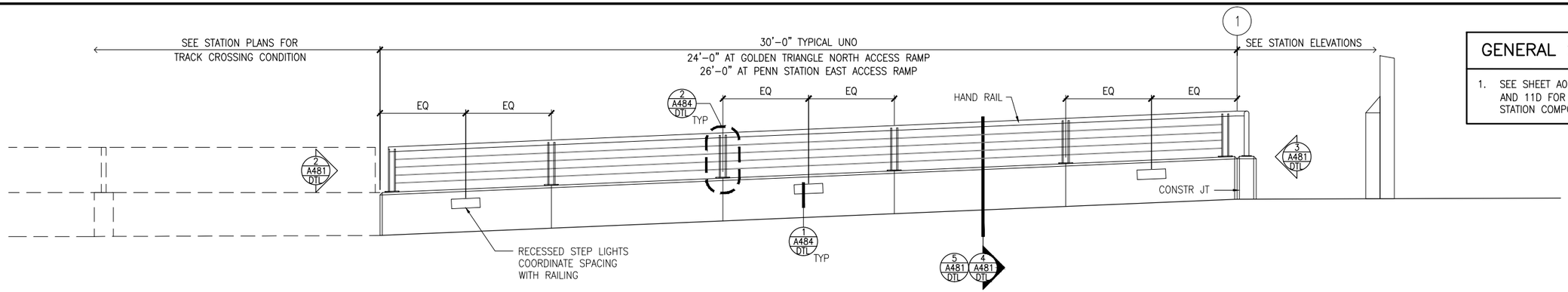

GENERAL SHEET NOTES

1. SEE SHEET A010 IN VOLUMES 11B, 11C, AND 11D FOR SPECIFIC FINISH/COLOR AT STATION COMPONENTS

1 INTERIOR RAMP ELEVATION AT TYPICAL ACCESS RAMP

SCALE: 1/4"=1'-0"

0 1 2 4
SCALE

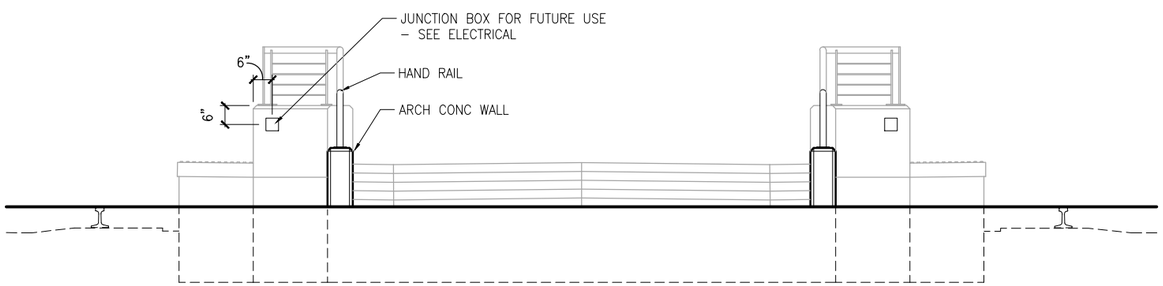

2 RAMP ELEVATION AT BOTTOM OF RAMP

SCALE: 1/4"=1'-0"

0 1 2 4
SCALE

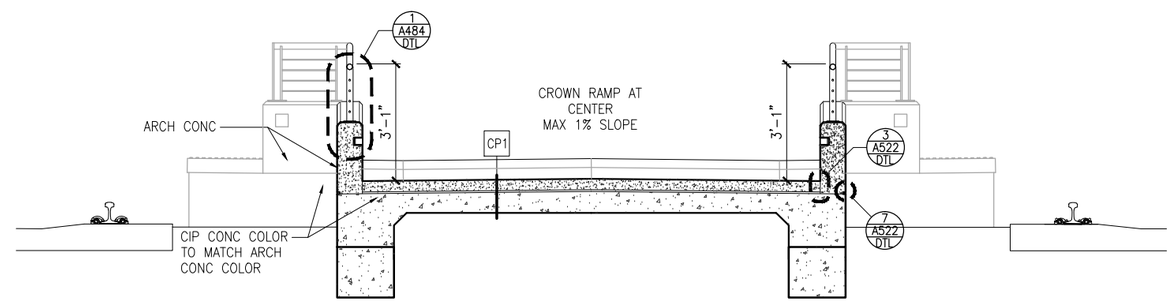

4 RAMP SECTION AT SHALLOW FOUNDATION

SCALE: 1/4"=1'-0"

0 1 2 4
SCALE

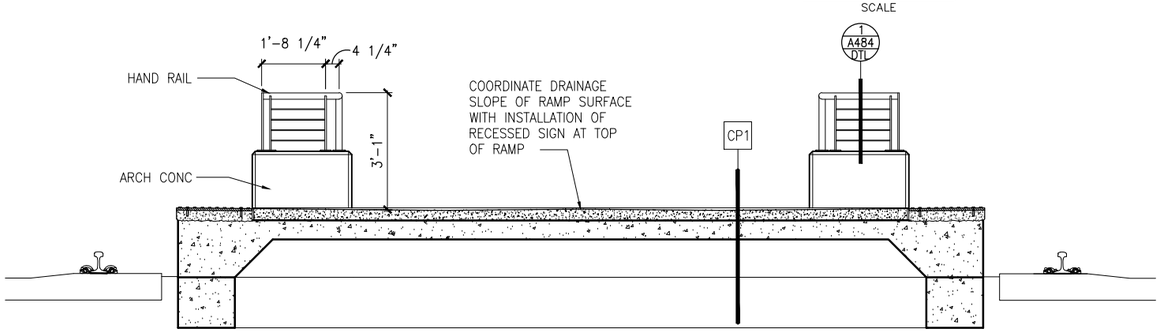

3 RAMP ELEVATION AT TOP OF RAMP

SCALE: 1/4"=1'-0"

0 1 2 4
SCALE

5 RAMP SECTION AT DEEP FOUNDATION

SCALE: 1/4"=1'-0"

0 1 2 4
SCALE

NO.	DATE	BY	CHECK	DESIGN	REVISION / SUBMITTAL

AECOM

90% SUBMISSION - 01/22/16

METROPOLITAN COUNCIL

SOUTHWEST Green Line LRT Extension

CIVIL - VOLUME 11E
STATIONS COMMON DETAILS
RAMP DETAILS

DISCIPLINE: ARCHITECTURE

SHEET NAME: D0-ARC-DTL-481

SHEET 18 OF 111

Jan, 18 2016 11:31 am V:\3400_ADC\CAD\OVERALL\plan sheets\architecture\D0-ARC-DTL-481.dwg By: v-mccarrtp

GENERAL SHEET NOTES

1. SEE SHEET A010 IN VOLUMES 11B, 11C, AND 11D FOR SPECIFIC FINISH/COLOR AT STATION COMPONENTS

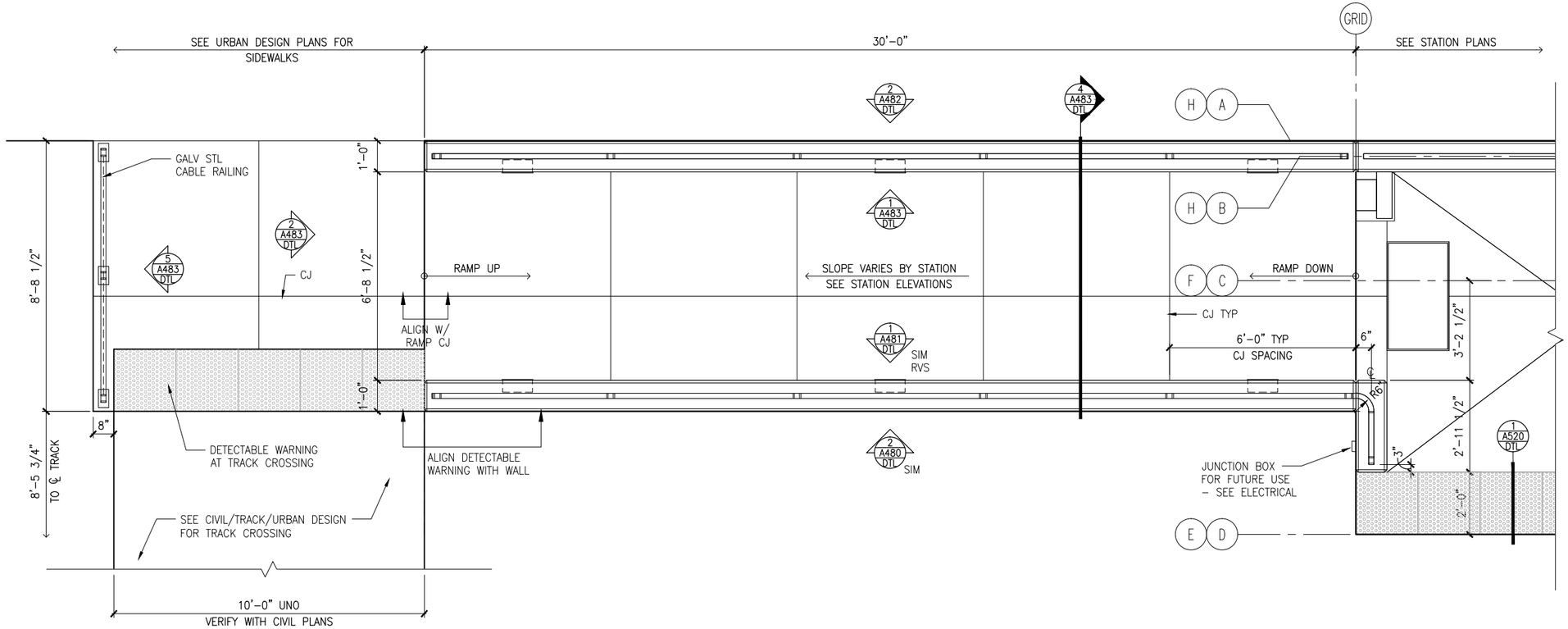

1 ENLARGED PLAN AT TYPICAL ROYALSTON STATION ACCESS RAMP
SCALE: 1/4"=1'-0"

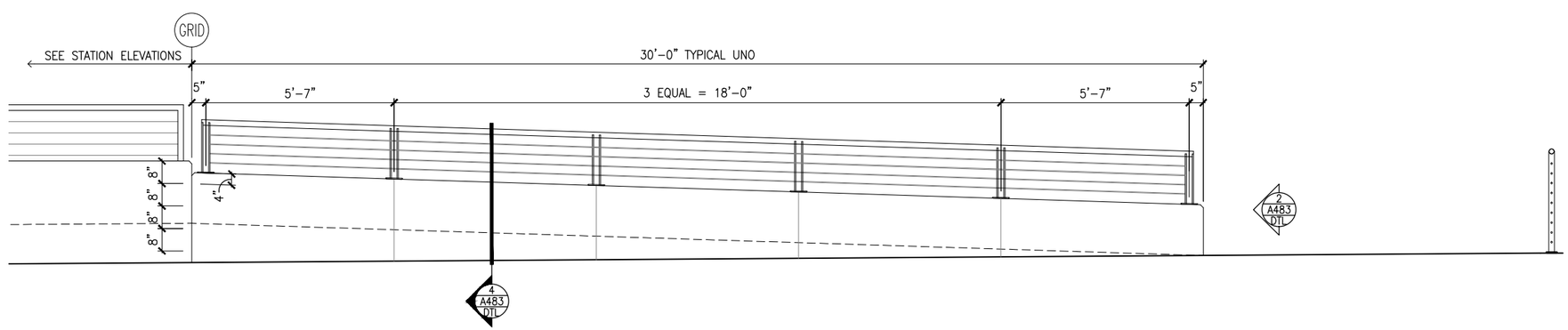

2 RAMP ELEVATION AT TYPICAL ROYALSTON ACCESS RAMP
SCALE: 1/4"=1'-0"

NO.	DATE	BY	CHECK	DESIGN	REVISION / SUBMITTAL

AECOM

90% SUBMISSION - 01/22/16

METROPOLITAN COUNCIL

SOUTHWEST Green Line LRT Extension

CIVIL - VOLUME 11E
STATIONS COMMON DETAILS
RAMP DETAILS

DISCIPLINE: ARCHITECTURE

SHEET NAME: D0-ARC-DTL-482

SHEET 19 OF 111

Jan, 18 2016 11:31 am V:\3400_ADC\CAD\OVERALL\plan sheets\architecture\D0-ARC-DTL-482.dwg By: v-mccarrtp

GENERAL SHEET NOTES

1. SEE SHEET A010 IN VOLUMES 11B, 11C, AND 11D FOR SPECIFIC FINISH/COLOR AT STATION COMPONENTS

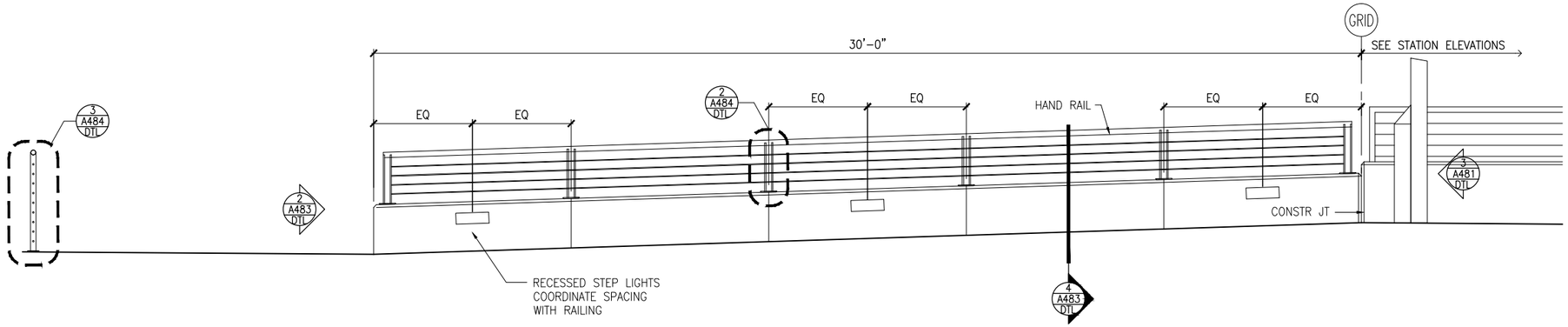

1 INTERIOR RAMP ELEVATION AT TYPICAL ROYALSTON ACCESS RAMP
SCALE: 1/4"=1'-0"

0 1 2 4
SCALE

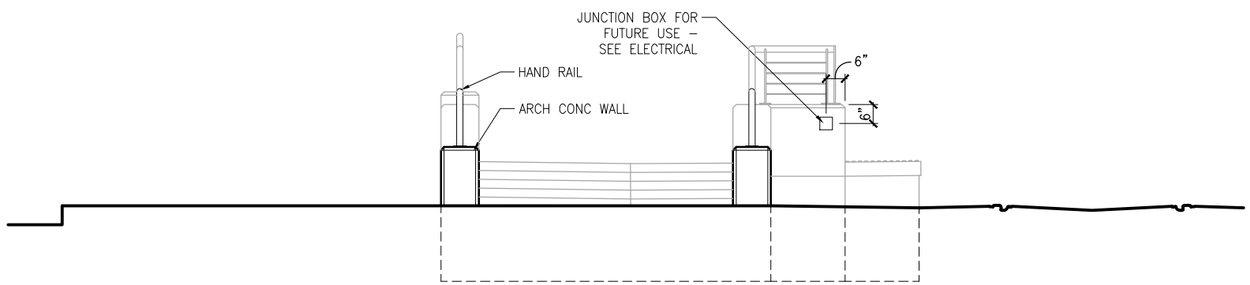

2 RAMP ELEVATION AT BOTTOM OF RAMP
SCALE: 1/4"=1'-0"

0 1 2 4
SCALE

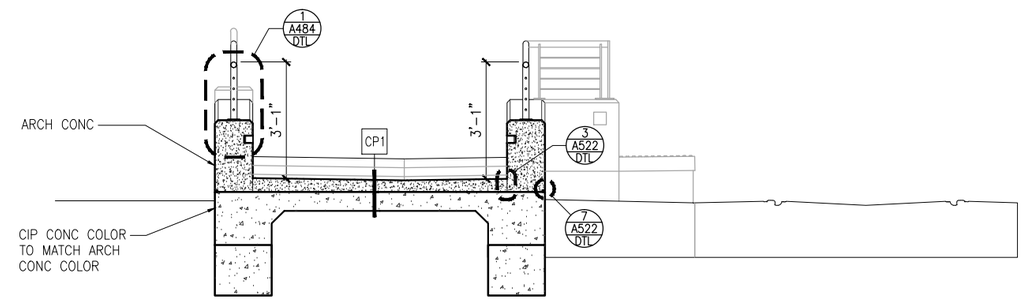

4 RAMP SECTION
SCALE: 1/4"=1'-0"

0 1 2 4
SCALE

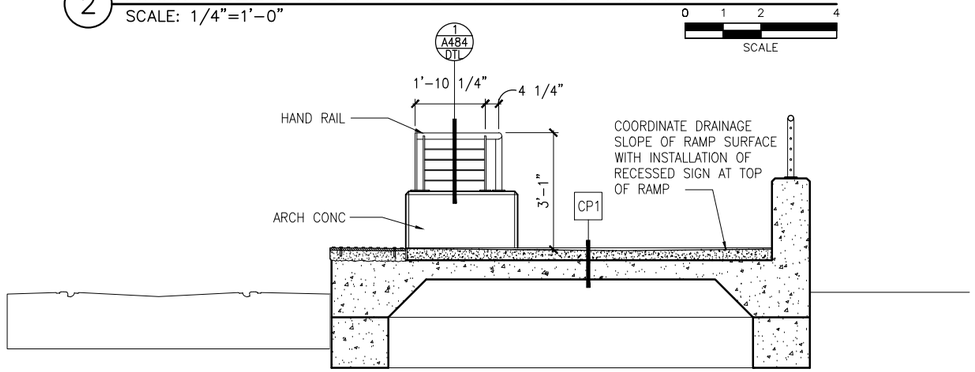

3 RAMP ELEVATION AT TOP OF RAMP
SCALE: 1/4"=1'-0"

0 1 2 4
SCALE

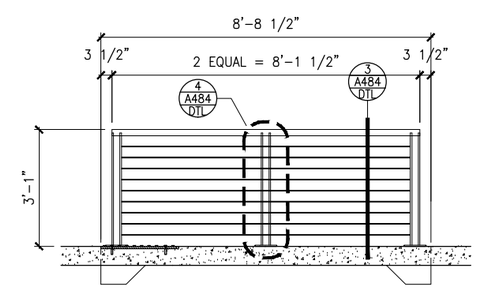

5 RAILING ELEVATION
SCALE: 1/4"=1'-0"

0 1 2 4
SCALE

NO.	DATE	BY	CHECK	DESIGN	REVISION / SUBMITTAL

AECOM

90% SUBMISSION - 01/22/16

METROPOLITAN COUNCIL

SOUTHWEST Green Line LRT Extension

CIVIL - VOLUME 11E
STATIONS COMMON DETAILS
RAMP DETAILS

DISCIPLINE: ARCHITECTURE

SHEET NAME: D0-ARC-DTL-483

SHEET 20 OF 111

Jan, 18 2016 11:32 am V:\3400_ADC\CAD\OVERALL\plan sheets\architecture\D0-ARC-DTL-483.dwg By: v-mccarrtp

GENERAL SHEET NOTES

1. SEE SHEET A010 IN VOLUMES 11B, 11C, AND 11D FOR SPECIFIC FINISH/COLOR AT STATION COMPONENTS

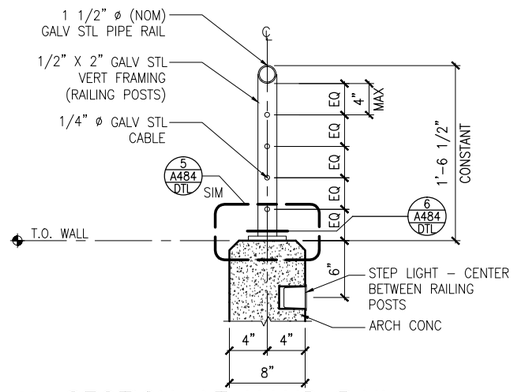

1 SECTION AT HAND RAIL
SCALE: 3/4"=1'-0"

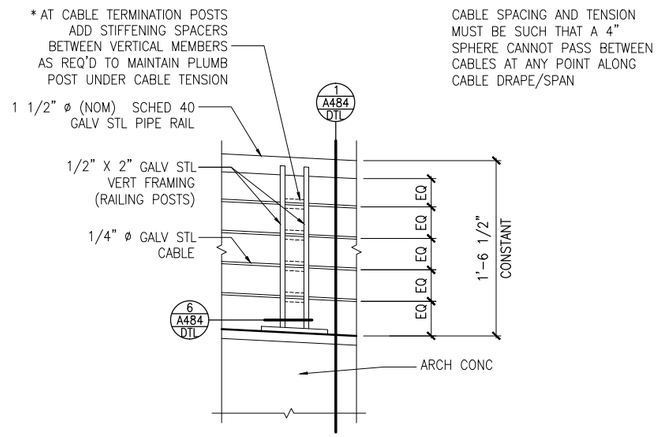

2 PARTIAL ELEVATION AT HAND RAIL
SCALE: 3/4"=1'-0"

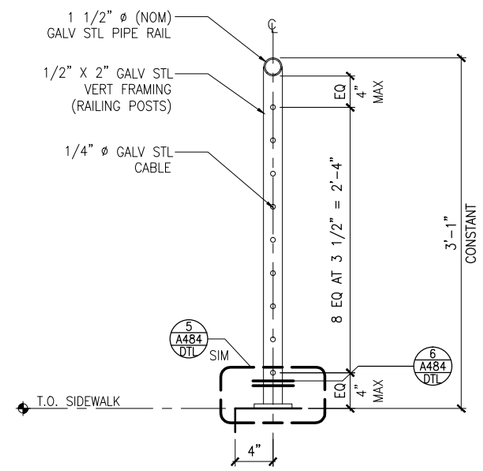

3 SECTION AT FULL HT RAIL
SCALE: 3/4"=1'-0"

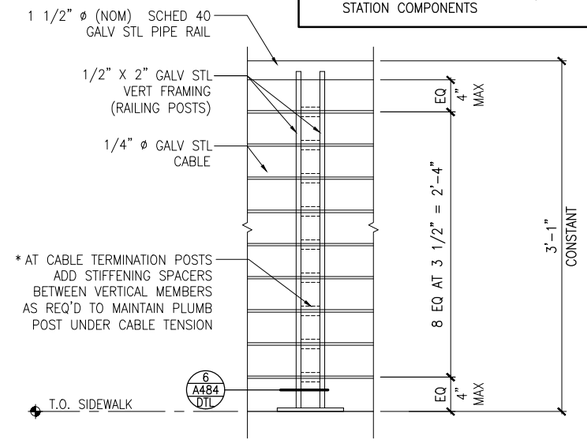

4 PARTIAL ELEVATION AT FULL HT RAIL
SCALE: 3/4"=1'-0"

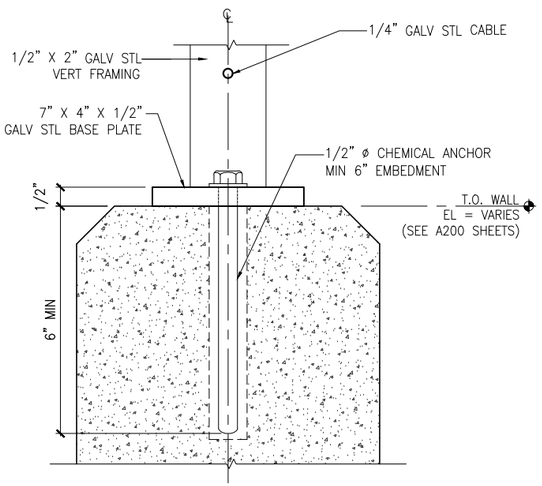

5 PARTIAL SECTION AT GUARD RAIL BASE PLATE
SCALE: 3"=1'-0"

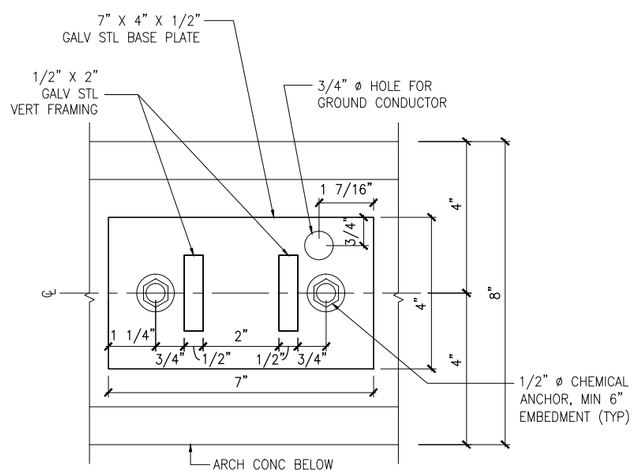

6 PLAN DETAIL AT GUARD RAIL BASE PLATE
SCALE: 3"=1'-0"

NOTE: COORDINATE GROUNDING PLACEMENT IN CONCRETE POUR.

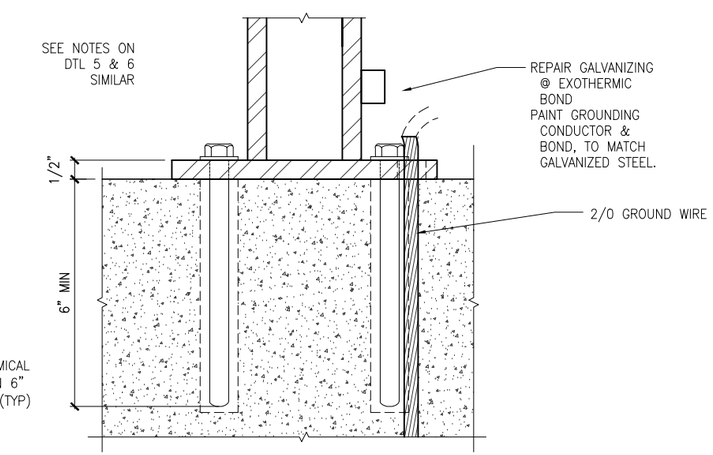

7 GROUNDING AT GUARD RAIL BASE PLATE
SCALE: 3"=1'-0"

8 NOT USED
SCALE:

NO.	DATE	BY	CHECK	DESIGN	REVISION / SUBMITTAL

AECOM

90% SUBMISSION - 01/22/16

METROPOLITAN COUNCIL

SOUTHWEST Green Line LRT Extension

CIVIL - VOLUME 11E
STATIONS COMMON DETAILS
RAMP DETAILS

DISCIPLINE: ARCHITECTURE

SHEET NAME: D0-ARC-DTL-484

SHEET 21 OF 111

Jan. 18 2016 11:32 am V:\3400_ADC\CAD\OVERALL\plan sheets\architecture\D0-ARC-DTL-484.dwg By: v-mccarrtp

GENERAL SHEET NOTES

1. SEE SHEET A010 IN VOLUMES 11B, 11C, AND 11D FOR SPECIFIC FINISH/COLOR AT STATION COMPONENTS

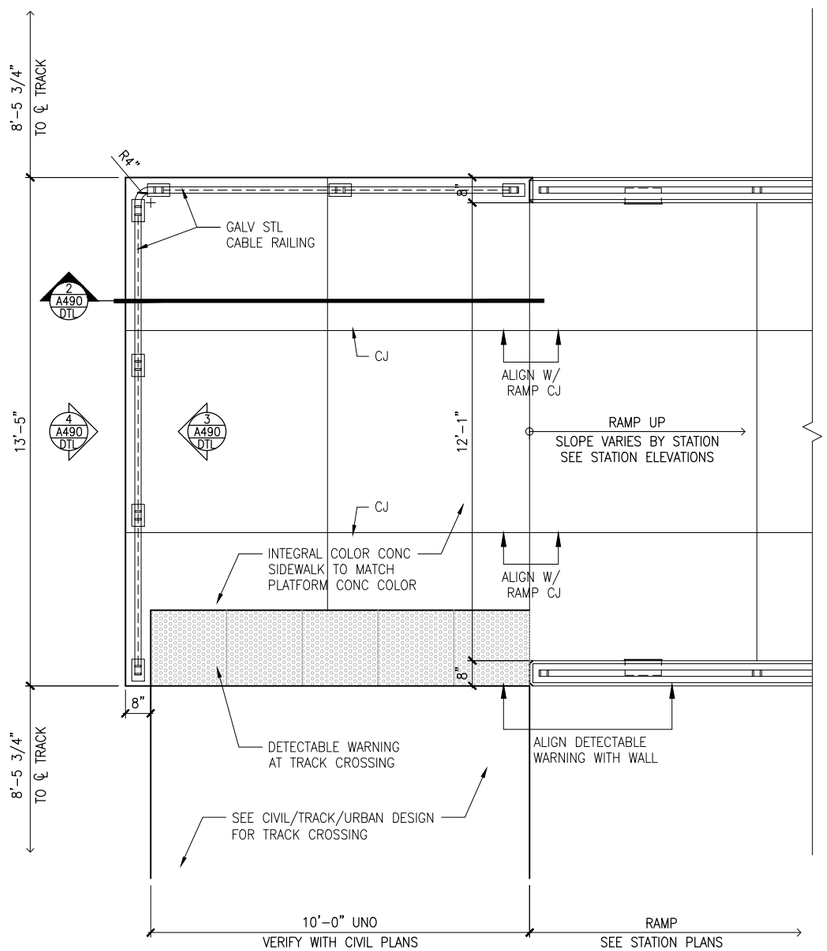

1 ENLARGED PLAN AT CROSSING TYPE 1
SCALE: 1/4"=1'-0"

0 1 2 4
SCALE

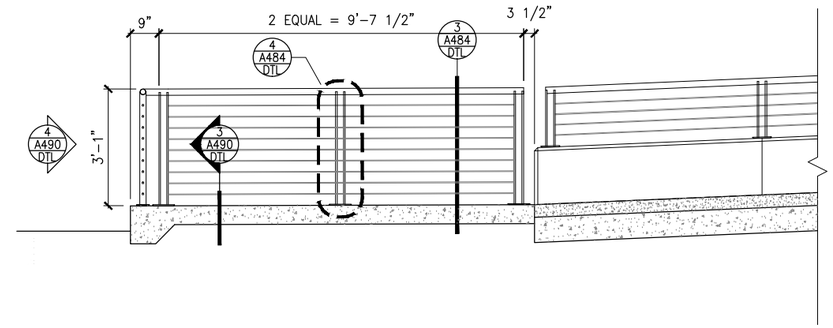

2 SECTION
SCALE: 1/4"=1'-0"

0 1 2 4
SCALE

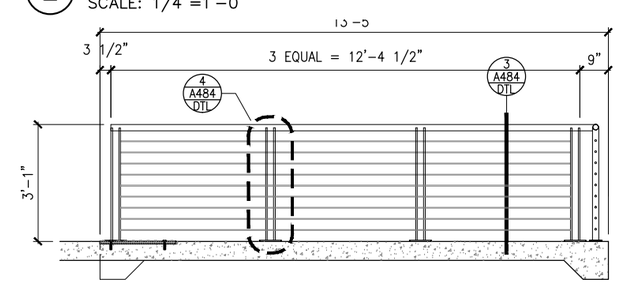

3 RAILING ELEVATION
SCALE: 1/4"=1'-0"

0 1 2 4
SCALE

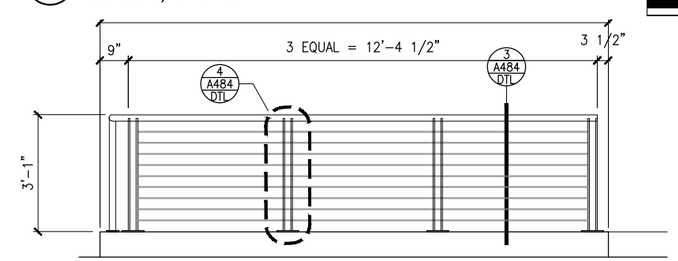

4 RAILING ELEVATION
SCALE: 1/4"=1'-0"

0 1 2 4
SCALE

NO.	DATE	BY	CHECK	DESIGN	REVISION / SUBMITTAL

AECOM

90% SUBMISSION - 01/22/16

METROPOLITAN COUNCIL

SOUTHWEST Green Line LRT Extension

CIVIL - VOLUME 11E
STATIONS COMMON DETAILS
CROSSING DETAILS

DISCIPLINE: ARCHITECTURE

SHEET NAME: D0-ARC-DTL-490

SHEET 22 OF 111

Jan. 18 2016 11:32 am V:\3400_ADC\CAD\OVERALL\plan sheets\architecture\D0-ARC-DTL-490.dwg By: v-mccarrtp

GENERAL SHEET NOTES

1. SEE SHEET A010 IN VOLUMES 11B, 11C, AND 11D FOR SPECIFIC FINISH/COLOR AT STATION COMPONENTS

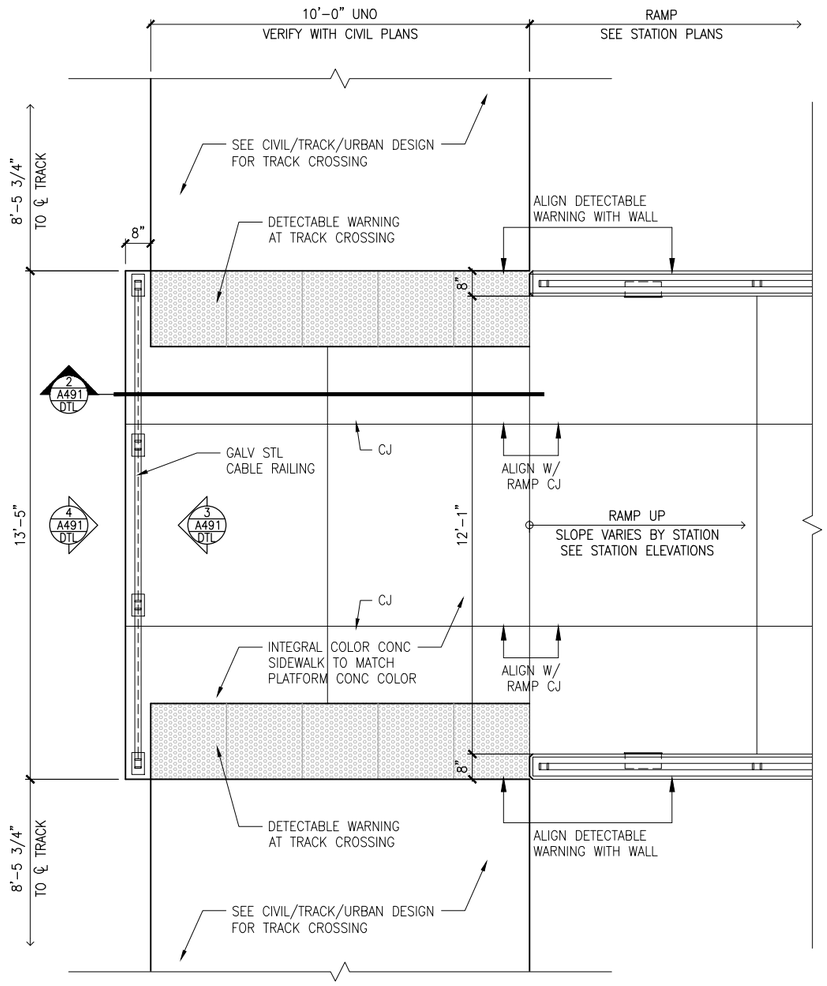

1 ENLARGED PLAN AT CROSSING TYPE 2
SCALE: 1/4"=1'-0"

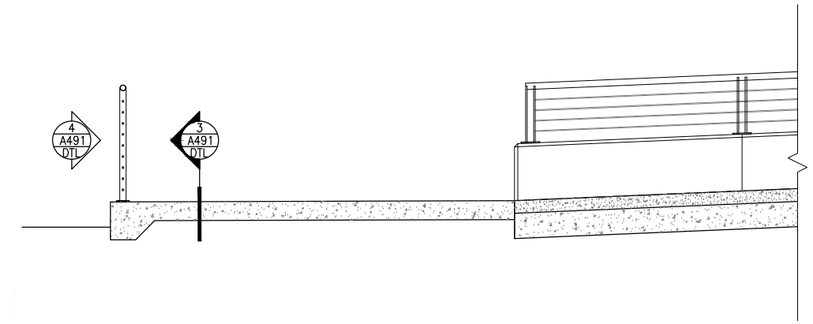

2 SECTION
SCALE: 1/4"=1'-0"

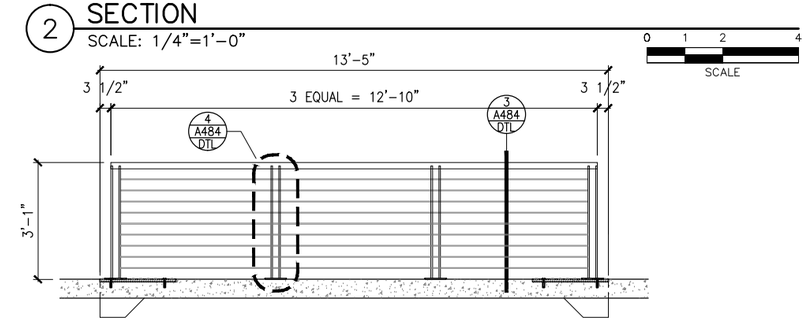

3 RAILING ELEVATION
SCALE: 1/4"=1'-0"

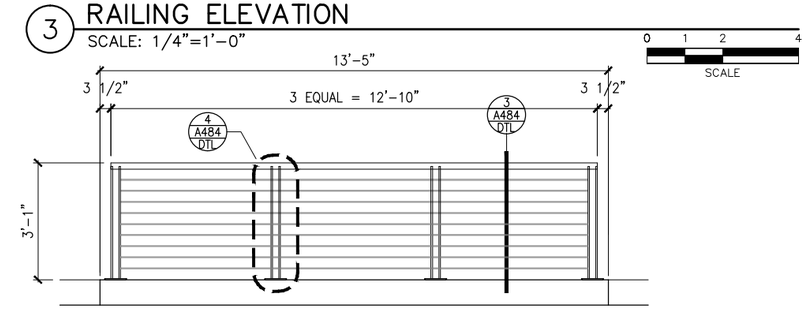

4 RAILING ELEVATION
SCALE: 1/4"=1'-0"

NO.	DATE	BY	CHECK	DESIGN	REVISION / SUBMITTAL

AECOM

90% SUBMISSION - 01/22/16

METROPOLITAN COUNCIL

SOUTHWEST Green Line LRT Extension

CIVIL - VOLUME 11E
STATIONS COMMON DETAILS
CROSSING DETAILS

DISCIPLINE: ARCHITECTURE

SHEET NAME: D0-ARC-DTL-491

SHEET 23 OF 111

Jan, 18 2016 11:33 am V:\3400_ADC\CAD\OVERALL\plan sheets\architecture\D0-ARC-DTL-491.dwg By: v-mccartp

GENERAL SHEET NOTES

1. SEE SHEET A010 IN VOLUMES 11B, 11C, AND 11D FOR SPECIFIC FINISH/COLOR AT STATION COMPONENTS

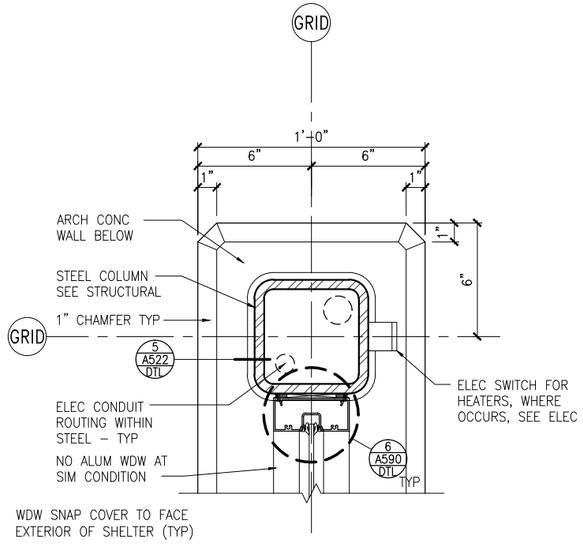

1 PLAN DETAIL AT WDW JAMB
SCALE: 1 1/2"=1'-0"

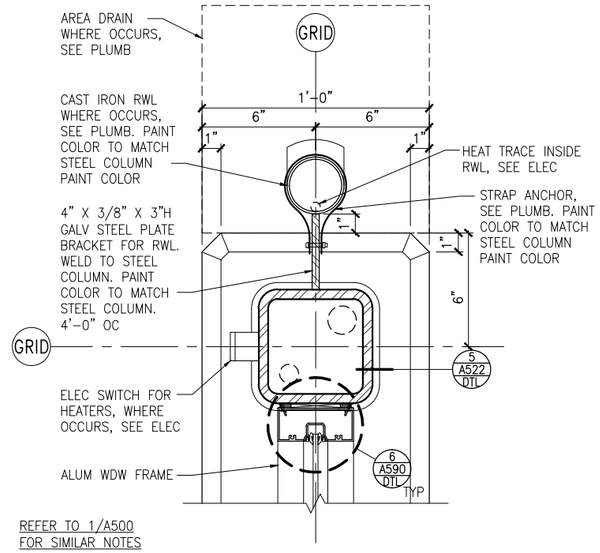

2 PLAN DETAIL AT RWL LOCATION
SCALE: 1 1/2"=1'-0"

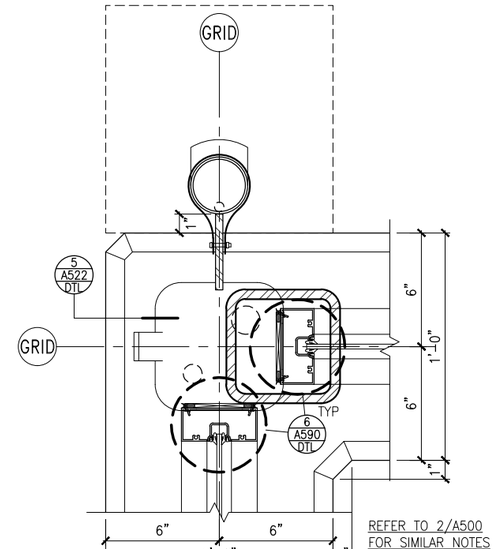

3 PLAN DETAIL AT RWL LOCATION
SCALE: 1 1/2"=1'-0"

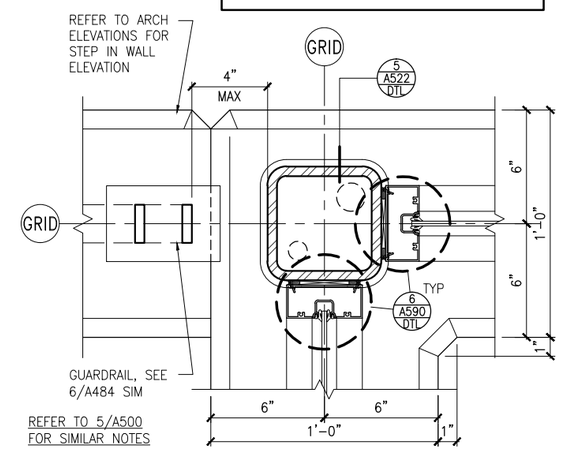

4 PLAN DETAIL AT INSIDE CORNER
SCALE: 1 1/2"=1'-0"

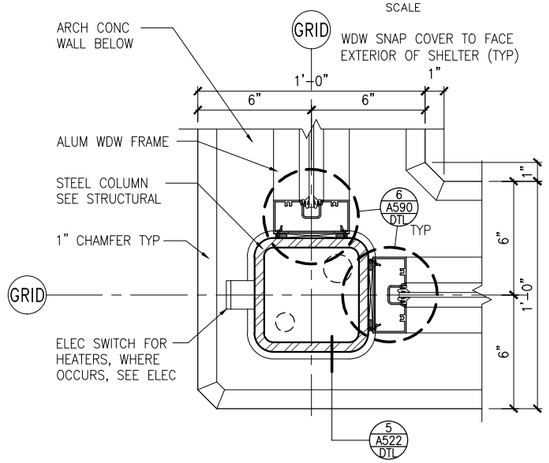

5 PLAN DETAIL AT WDW AND COL CORNER
SCALE: 1 1/2"=1'-0"

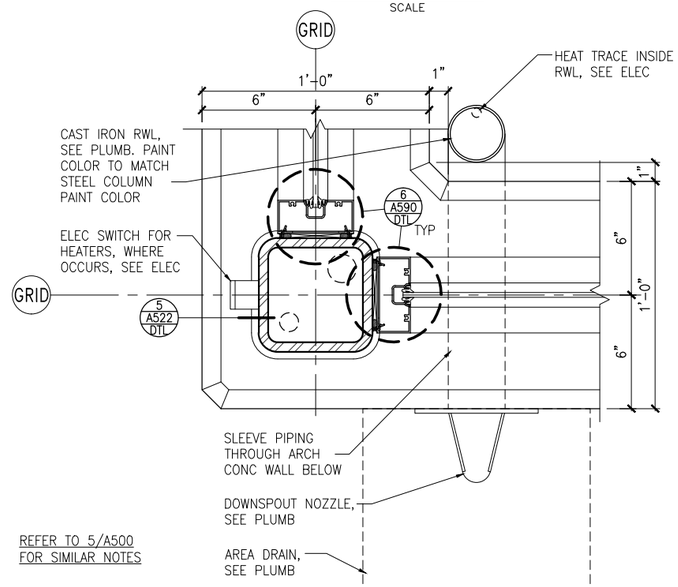

6 PLAN DETAIL AT DOWNSPOUT NOZZLE
SCALE: 1 1/2"=1'-0"

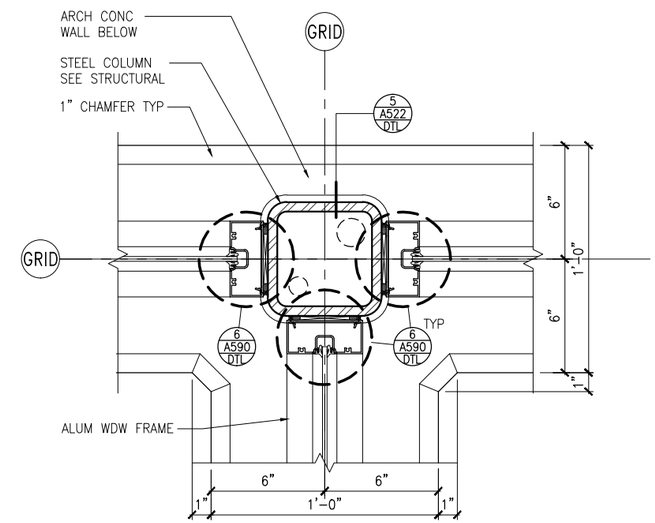

7 PLAN DETAIL AT INSIDE CORNER
SCALE: 1 1/2"=1'-0"

NO.	DATE	BY	CHECK	DESIGN	REVISION / SUBMITTAL

AECOM

90% SUBMISSION - 01/22/16

METROPOLITAN COUNCIL

SOUTHWEST Green Line LRT Extension

CIVIL - VOLUME 11E
STATIONS COMMON DETAILS
PLAN DETAILS - WINDSCREEN FRAMING

DISCIPLINE: ARCHITECTURE

SHEET NAME: D0-ARC-DTL-500

SHEET 24 OF 111

Jan. 18 2016 11:33 am V:\3400_ADC\CAD\OVERALL\plan sheets\architecture\D0-ARC-DTL-500.dwg By: v-mccarrtp

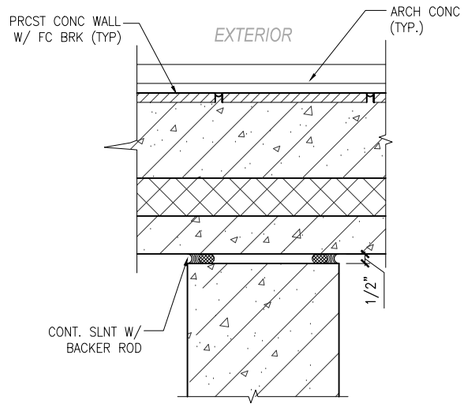

1 PRCST AND CMU WALL CONN.
SCALE: 1 1/2"=1'-0"
0 2" 4" 8"
SCALE

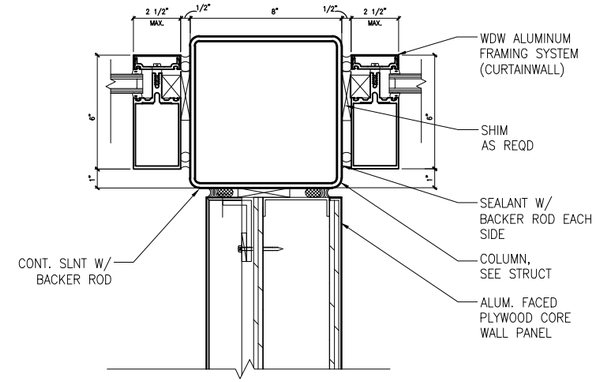

3 MTL PNL CONNECTION TO COL
SCALE: 3"=1'-0"
0 1" 2" 4"
SCALE

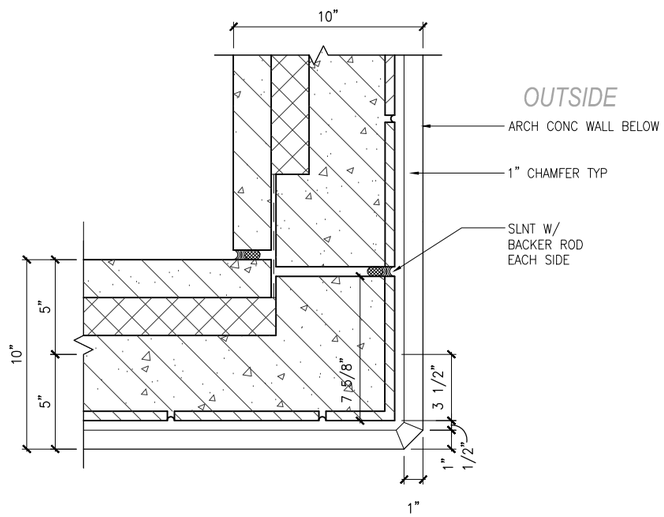

2 CORNER AT PRCST WALL
SCALE: 1 1/2"=1'-0"
0 2" 4" 8"
SCALE

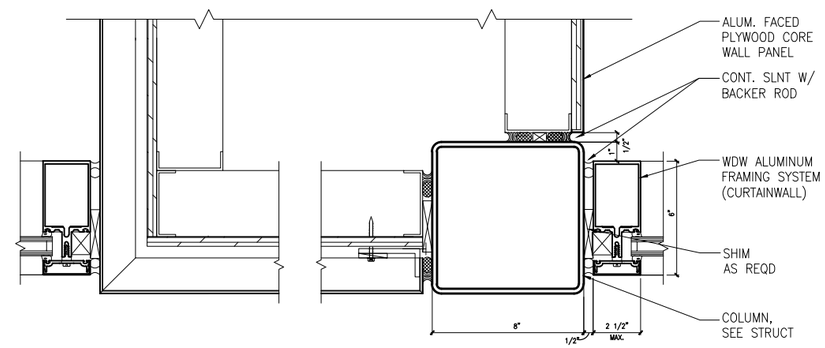

4 MTL WALL PANEL CONNECTION
SCALE: 3"=1'-0"
0 1" 2" 4"
SCALE

NO.	DATE	BY	CHECK	DESIGN	REVISION / SUBMITTAL
-	-	-	-	-	-

AECOM

90% SUBMISSION - 01/22/16

METROPOLITAN COUNCIL

SOUTHWEST Green Line LRT Extension

CIVIL - VOLUME 11E
STATIONS COMMON DETAILS
VC PLAN DETAILS

DISCIPLINE: ARCHITECTURE

SHEET NAME: D0-ARC-DTL-510

SHEET 25 OF 111

Jan, 18 2016 11:33 am V:\3400_ADC\CAD\OVERALL\plan sheets\architecture\D0-ARC-DTL-510.dwg By: v-mccarrtp

GENERAL SHEET NOTES

1. SEE SHEET A010 IN VOLUMES 11B, 11C, AND 11D FOR SPECIFIC FINISH/COLOR AT STATION COMPONENTS

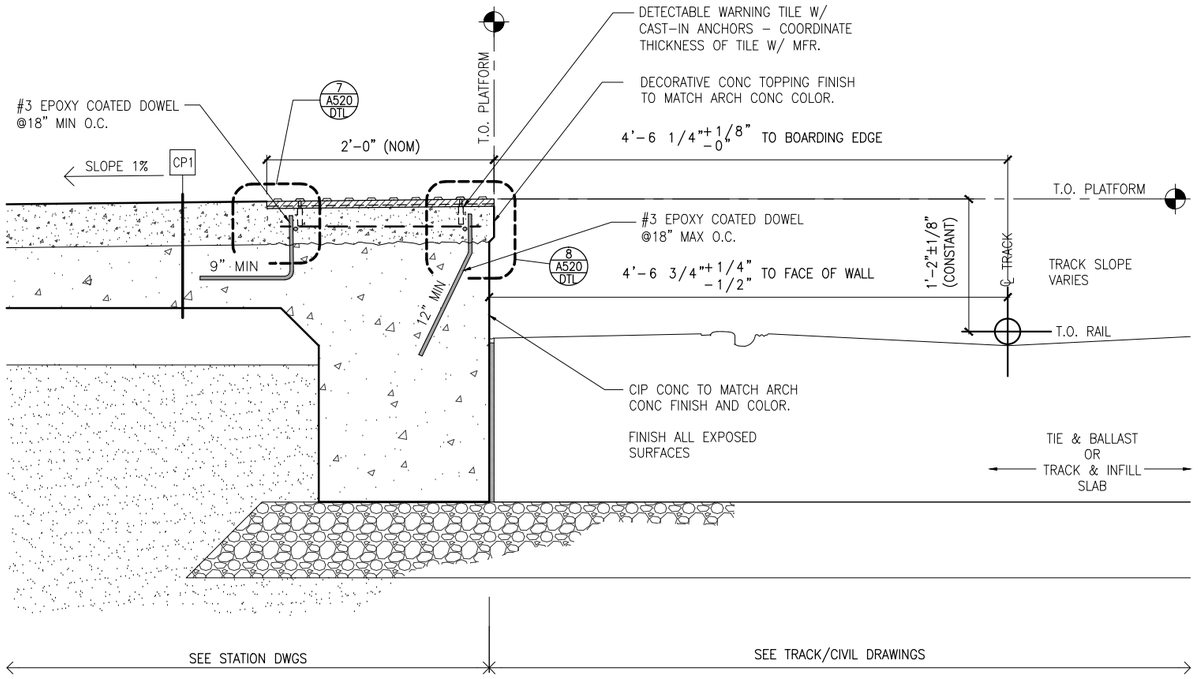

1 PLATFORM EDGE AT GRADE BEAM
SCALE: 3/4"=1'-0"

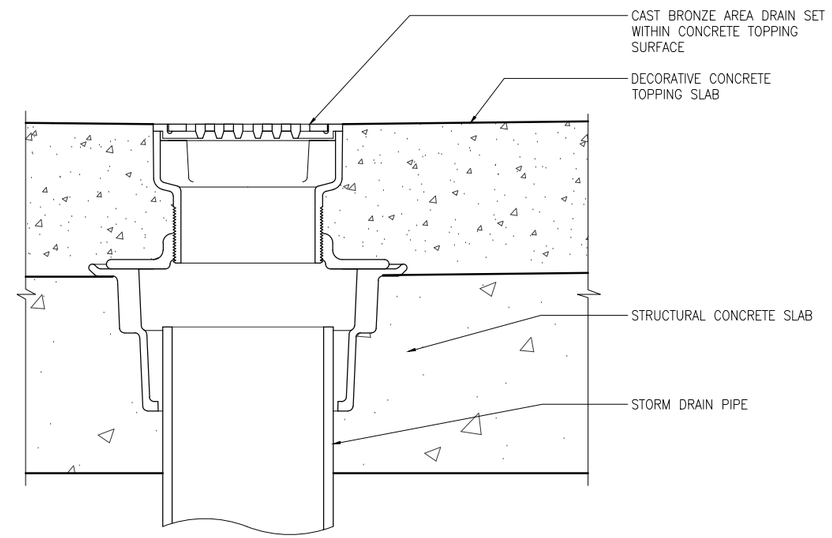

2 SURFACE AREA DRAIN AT PLATFORM
SCALE: 3"=1'-0"

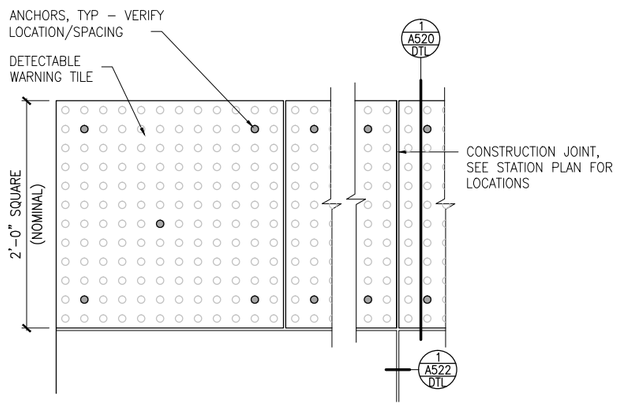

3 TACTILE WARNING STRIP PLAN
SCALE: 3/4"=1'-0"

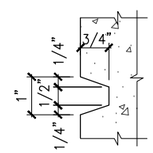

4 TYP HORIZ CONC REVEAL
SCALE: 3"=1'-0"

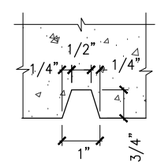

5 TYP VERT CONC REVEAL
SCALE: 3"=1'-0"

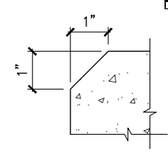

6 TYP CONC WALL CHAMFER
SCALE: 3"=1'-0"

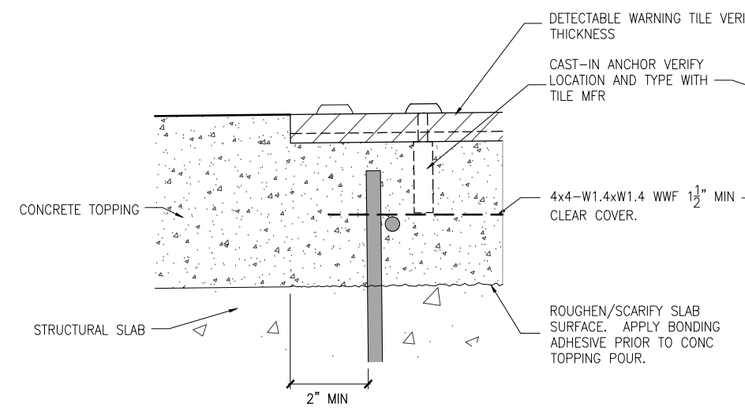

7 JOINT AT WARNING TILE
SCALE: 3"=1'-0"

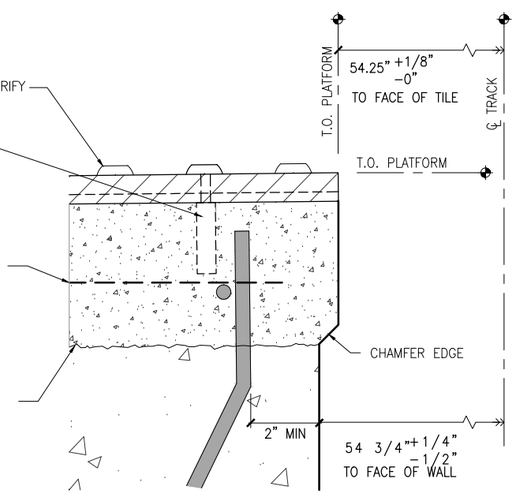

8 EDGE AT WARNING TILE
SCALE: 3"=1'-0"

NO.	DATE	BY	CHECK	DESIGN	REVISION / SUBMITTAL

AECOM

90% SUBMISSION - 01/22/16

METROPOLITAN COUNCIL

SOUTHWEST Green Line LRT Extension

CIVIL - VOLUME 11E
STATIONS COMMON DETAILS
SECTION DETAILS - PLATFORM

DISCIPLINE: ARCHITECTURE

SHEET NAME: D0-ARC-DTL-520

SHEET 26 OF 111

Jan, 18 2016 11:34 am V:\3400_ADC\CAD\OVERALL\plan sheets\architecture\D0-ARC-DTL-520.dwg By: v-mccarrtp

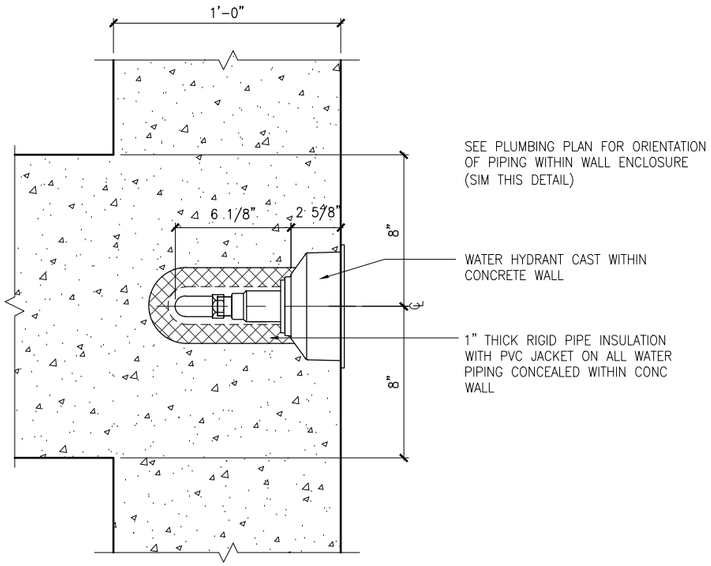

1 PARTIAL PLAN AT HYDRANT
SCALE: 1 1/2"=1'-0"

0 2" 4" 8"
SCALE

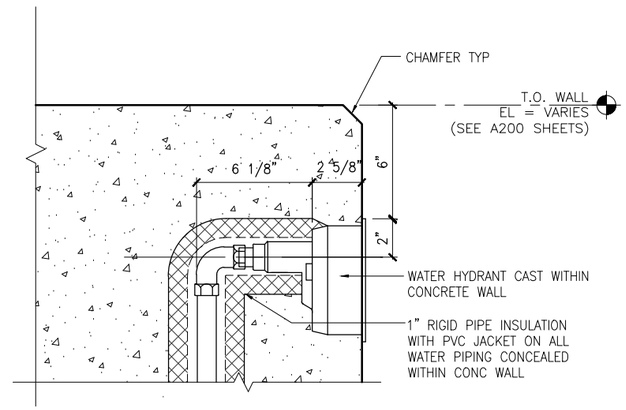

2 WALL SECTION AT WATER HYDRANT
SCALE: 1 1/2"=1'-0"

0 2" 4" 8"
SCALE

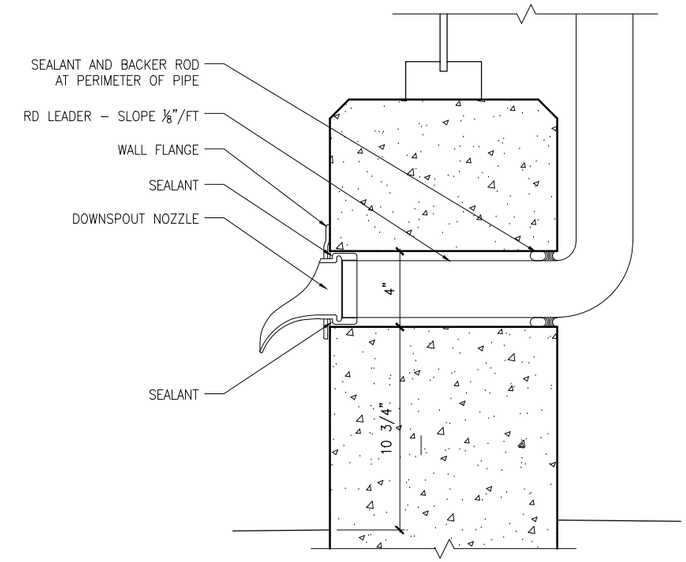

3 WALL SECTION AT DOWNSPOUT NOZZLE
SCALE:1 1/2"=1'-0"

0 2" 4" 8"
SCALE

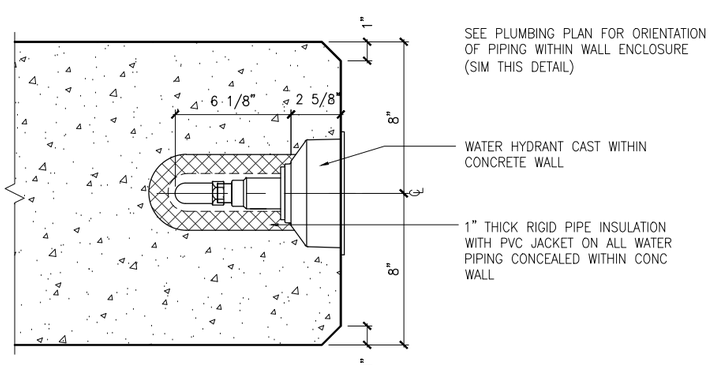

4 PARTIAL PLAN AT HYDRANT
SCALE: 1 1/2"=1'-0"

0 2" 4" 8"
SCALE

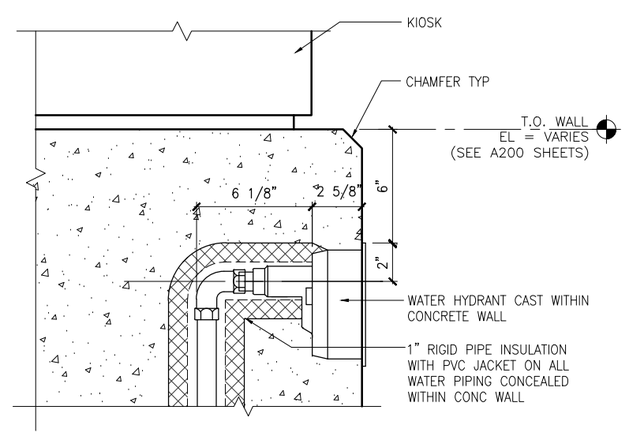

5 WALL SECTION AT WATER HYDRANT
SCALE: 1 1/2"=1'-0"

0 2" 4" 8"
SCALE

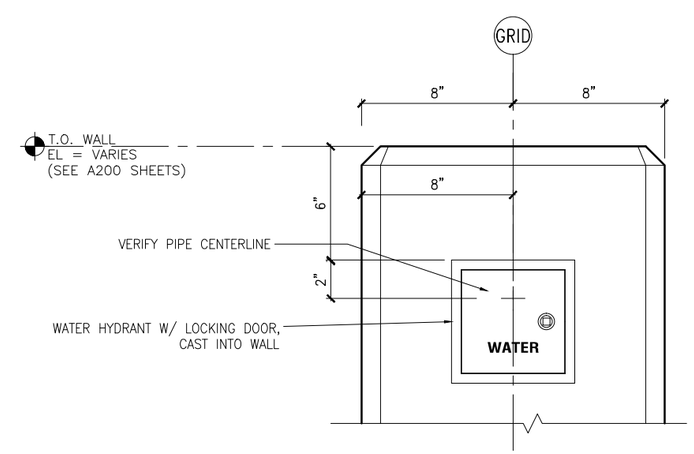

6 WALL ELEV AT WATER HYDRANT
SCALE: 1 1/2"=1'-0"

0 2" 4" 8"
SCALE

NO.	DATE	BY	CHECK	DESIGN	REVISION / SUBMITTAL

AECOM

90% SUBMISSION - 01/22/16

METROPOLITAN COUNCIL

SOUTHWEST Green Line LRT Extension

CIVIL - VOLUME 11E
STATIONS COMMON DETAILS
SECTION DETAILS - PLATFORM WALL

DISCIPLINE: ARCHITECTURE

SHEET NAME: D0-ARC-DTL-521

SHEET 27 OF 111

Jan, 18 2016 11:34 am V:\3400_ADC\CAD\OVERALL\plan sheets\architecture\D0-ARC-DTL-521.dwg By: v-mccarrtp

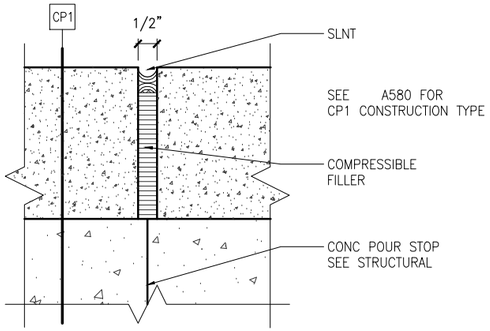

1 SECTION DETAIL
CONSTRUCTION JT AT PLATFORM
SCALE: 3"=1'-0"

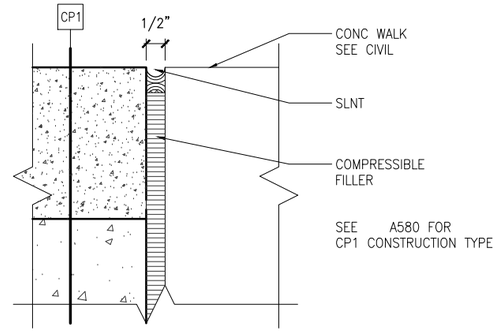

2 SECTION DETAIL
CONSTRUCTION JT AT PLATFORM AND WALK
SCALE: 3"=1'-0"

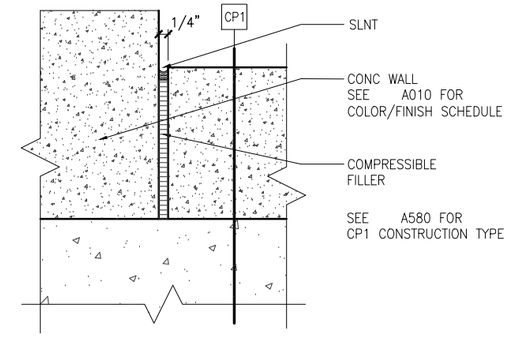

3 SECTION DETAIL
CONSTRUCTION JT AT PLATFORM AND WALL
SCALE: 3"=1'-0"

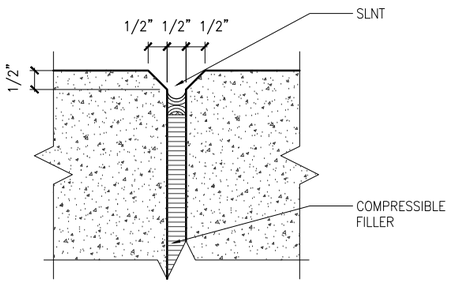

4 PLAN DETAIL
CONSTRUCTION JT AT WALL
SCALE: 3"=1'-0"

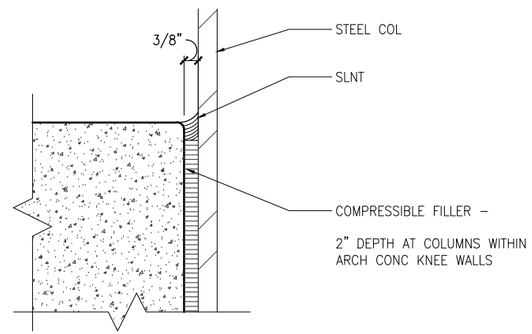

5 SECTION DETAIL
CONSTRUCTION JT AT WALL AND COLUMN
SCALE: 3"=1'-0"

6 NOT USED
SCALE:

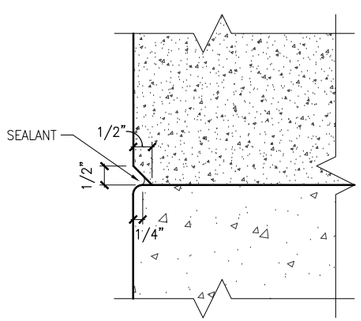

7 SECTION DETAIL
CONSTRUCTION JT AT WALL
SCALE: 3"=1'-0"

NO.	DATE	BY	CHECK	DESIGN	REVISION / SUBMITTAL

AECOM

90% SUBMISSION - 01/22/16

METROPOLITAN COUNCIL

SOUTHWEST Green Line LRT Extension

CIVIL - VOLUME 11E
STATIONS COMMON DETAILS
SECTION DETAILS - PLATFORM

DISCIPLINE: ARCHITECTURE

SHEET NAME: D0-ARC-DTL-522

SHEET 28 OF 111

Jan, 18 2016 11:34 am V:\3400_ADC\CAD\OVERALL\plan sheets\architecture\D0-ARC-DTL-522.dwg By: v-mccarrtp

GENERAL SHEET NOTES

1. SEE SHEET A010 IN VOLUMES 11B, 11C, AND 11D FOR SPECIFIC FINISH/COLOR AT STATION COMPONENTS

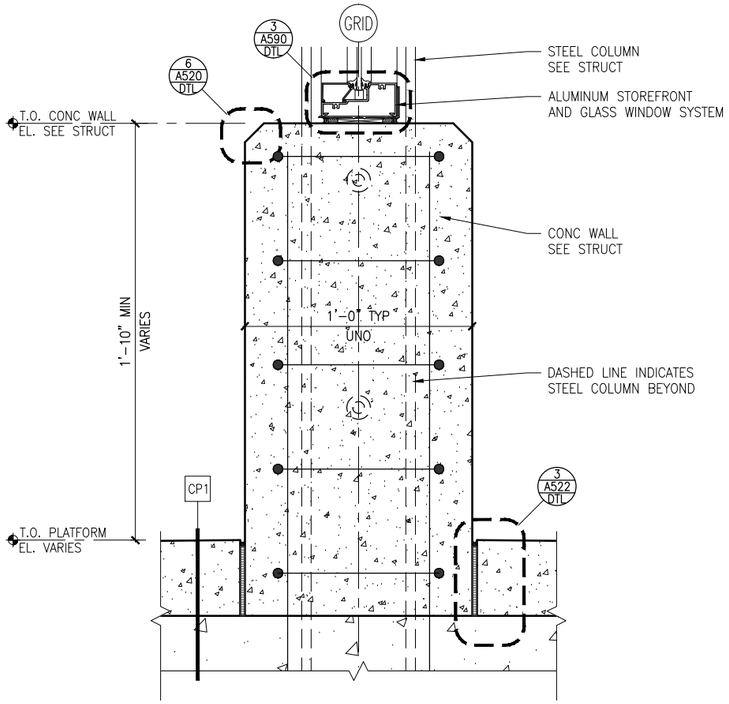

1 SECTION DETAIL
TYP CONC WALL AT SHELTER
SCALE: 1 1/2"=1'-0"

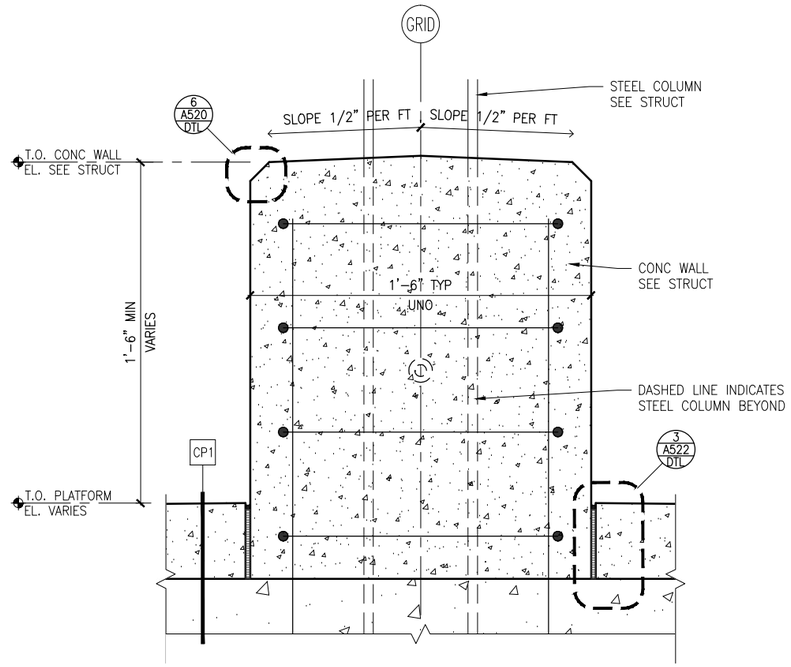

2 SECTION DETAIL
TYP CONC SEAT WALL
SCALE: 1 1/2"=1'-0"

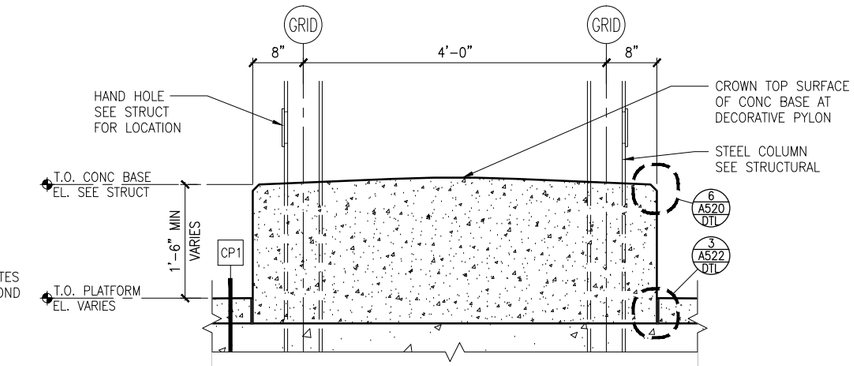

3 SECTION DETAIL
CONC BASE AT PYLON
SCALE: 1/2"=1'-0"

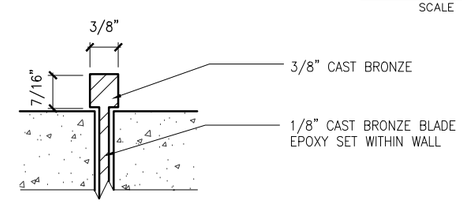

6B SECTION

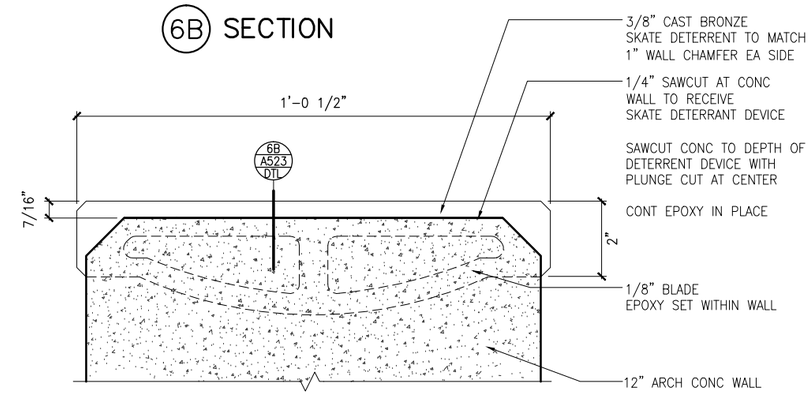

4 NOT USED
SCALE: NTS

5 NOT USED
SCALE: NTS

6 SKATE DETERRENT MOUNTING
SCALE: 3"=1'-0"

NO.	DATE	BY	CHECK	DESIGN	REVISION / SUBMITTAL

AECOM

90% SUBMISSION - 01/22/16

METROPOLITAN COUNCIL

SOUTHWEST Green Line LRT Extension

CIVIL - VOLUME 11E
STATIONS COMMON DETAILS
SECTION DETAILS - PLATFORM WALL

DISCIPLINE: ARCHITECTURE

SHEET NAME: D0-ARC-DTL-523

SHEET 29 OF 111

Jan, 18 2016 11:34 am V:\3400_ADC\CAD\OVERALL\plan sheets\architecture\D0-ARC-DTL-523.dwg By: v-mccarrtp

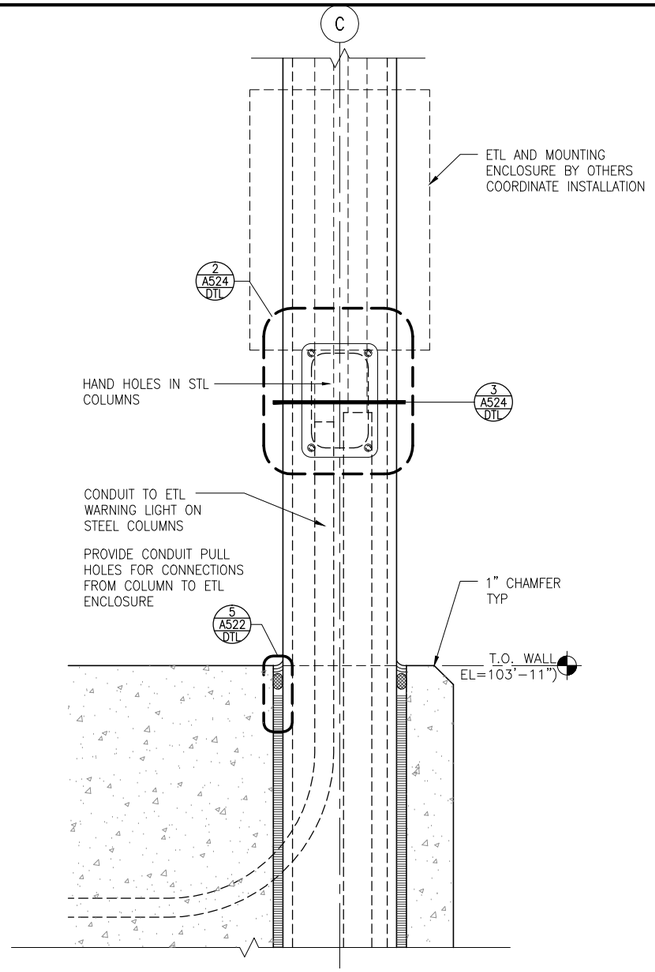

1 EMERGENCY TELEPHONE MOUNTING
SCALE: 1 1/2"=1'-0"
0 2" 4" 8" SCALE

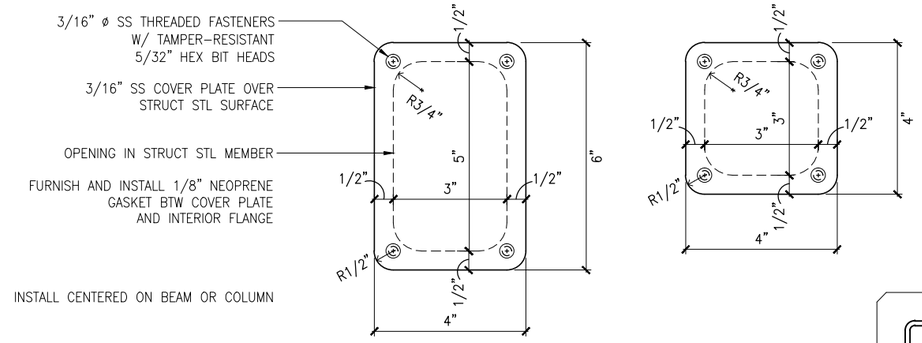

2 ELEV DETAIL AT HAND HOLE
SCALE: 3"=1'-0"
0 1" 2" 4" SCALE

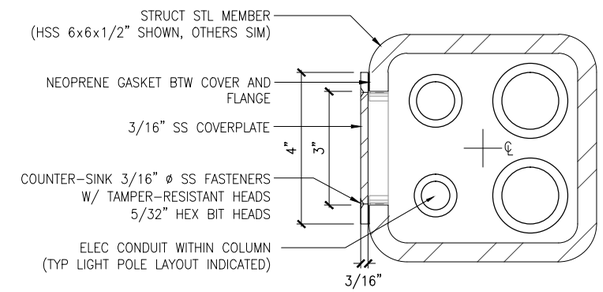

3 DETAIL AT HAND HOLE
SCALE: 3"=1'-0"
0 1" 2" 4" SCALE

GENERAL SHEET NOTES

1. SEE SHEET A010 IN VOLUMES 11B, 11C, AND 11D FOR SPECIFIC FINISH/COLOR AT STATION COMPONENTS

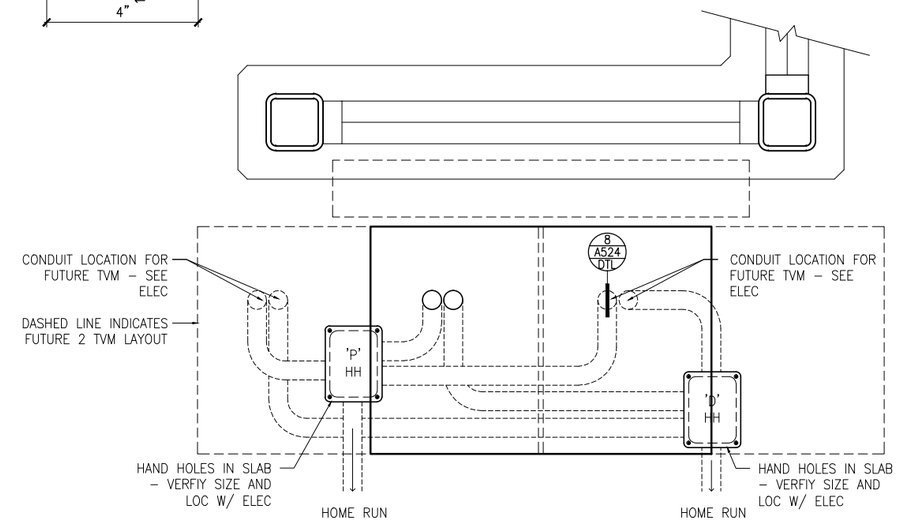

4 PLAN AT TVM CONDUIT/HH
SCALE: 3/4"=1'-0"
0 2" 4" 8" SCALE

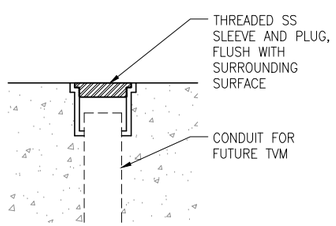

5 DETAIL AT TVM CONDUIT
SCALE: 1 1/2"=1'-0"
0 2" 4" 8" SCALE

NO.	DATE	BY	CHECK	DESIGN	REVISION / SUBMITTAL

AECOM

90% SUBMISSION - 01/22/16

METROPOLITAN COUNCIL

SOUTHWEST Green Line LRT Extension

CIVIL - VOLUME 11E
STATIONS COMMON DETAILS
SECTION DETAILS - ETEL/HANDHOLE

DISCIPLINE: ARCHITECTURE

SHEET NAME: D0-ARC-DTL-524

SHEET 30 OF 111

Jan, 18 2016 11:35 am V:\3400_ADC\CAD\OVERALL\plan sheets\architecture\D0-ARC-DTL-524.dwg By: v-mccarrtp

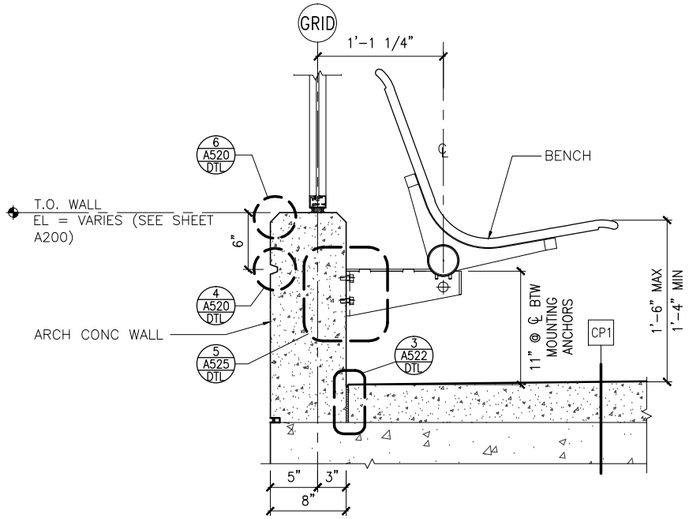

1 SECTION AT BENCH
SCALE: 3/4"=1'-0"

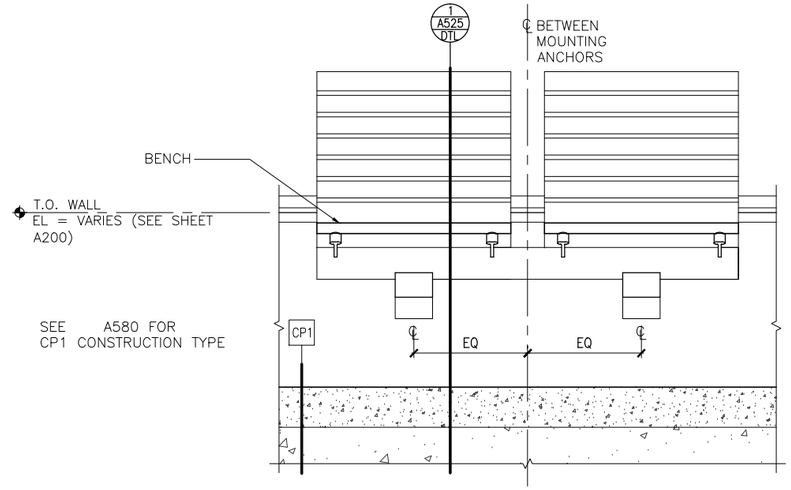

2 ELEVATION AT BENCH
SCALE: 3/4"=1'-0"

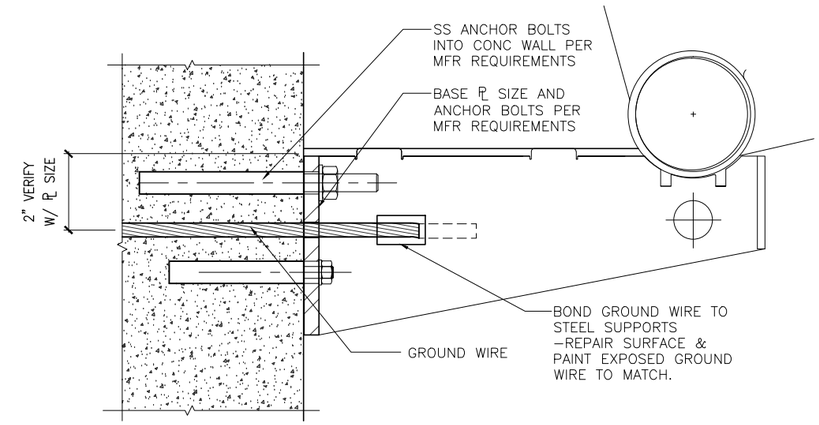

5 MOUNTING DETAIL AT BENCH
SCALE: 3"=1'-0"

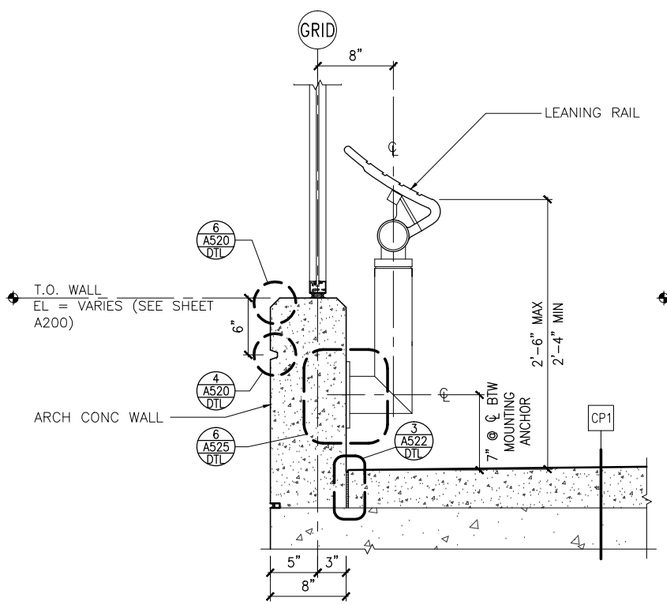

3 SECTION AT LEANING RAIL
SCALE: 3/4"=1'-0"

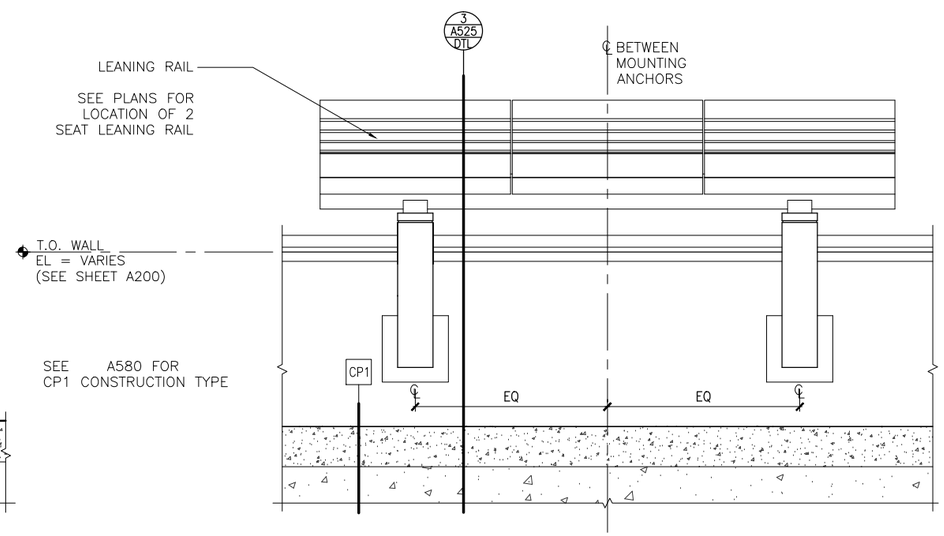

4 ELEVATION AT LEANING RAIL END
SCALE: 3/4"=1'-0"

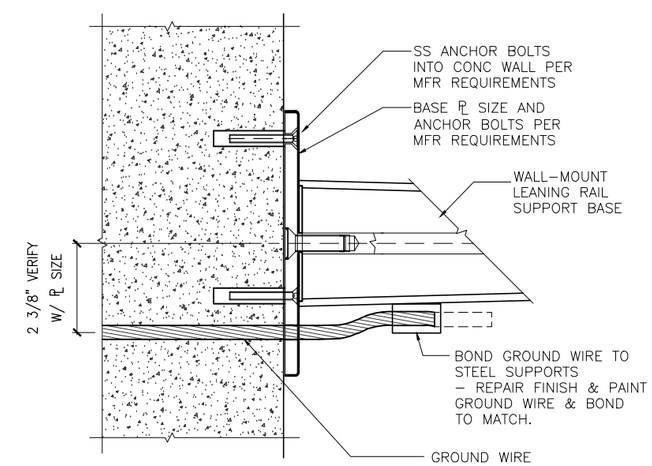

6 MOUNTING DETAIL AT LEANING RAIL
SCALE: 3"=1'-0"

NO.	DATE	BY	CHECK	DESIGN	REVISION / SUBMITTAL

AECOM

90% SUBMISSION - 01/22/16

METROPOLITAN COUNCIL

SOUTHWEST Green Line LRT Extension

CIVIL - VOLUME 11E
STATIONS COMMON DETAILS
BENCH/LEANING RAIL DETAILS

DISCIPLINE: ARCHITECTURE

SHEET NAME: D0-ARC-DTL-525

SHEET 31 OF 111

Jan, 18 2016 11:35 am V:\3400_ADC\CAD\OVERALL\plan sheets\architecture\D0-ARC-DTL-525.dwg By: v-mccarrtp

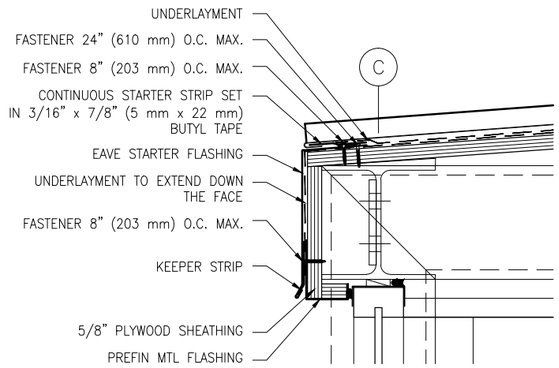

1 EAVE DETAIL AT HIGH ROOF
SCALE: 1 1/2"=1'-0"

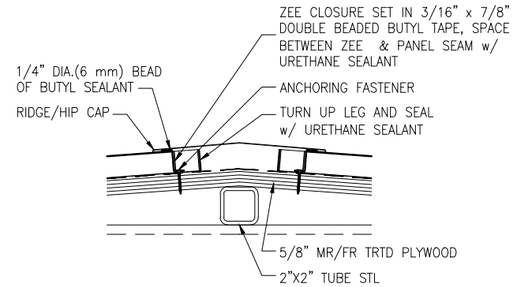

2 RIDGE DETAIL AT HIGH ROOF
SCALE: 1 1/2"=1'-0"

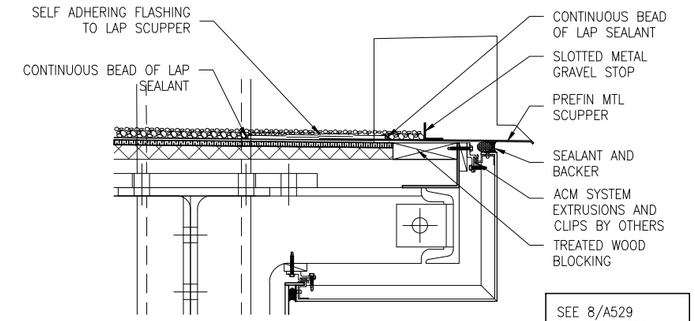

SEE 8/A529 FOR TYP NOTES AND DIMS

3 SCUPPER DETAIL
SCALE: 1 1/2"=1'-0"

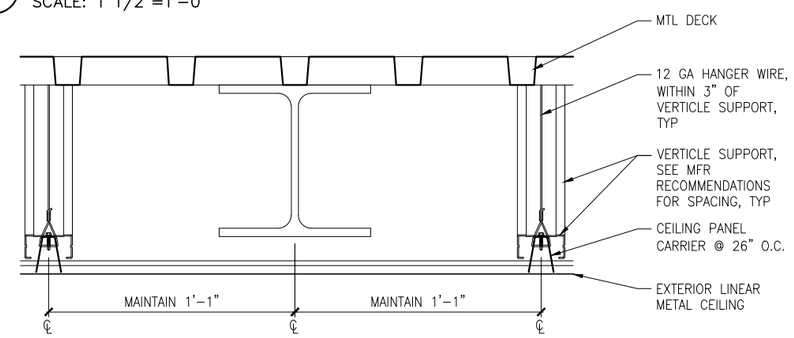

4 METAL CEILING SYSTEM DETAIL – TYP
SCALE: 1 1/2"=1'-0"

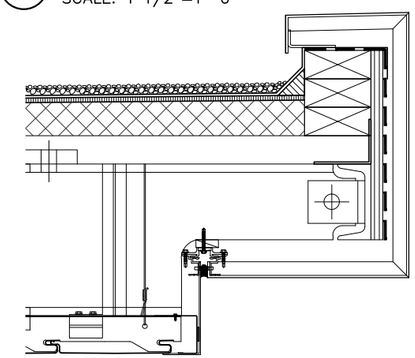

SEE 8/A529 FOR TYP NOTES AND DIMS

5 CANOPY EDGE DETAIL – TYP
SCALE: 1 1/2"=1'-0"

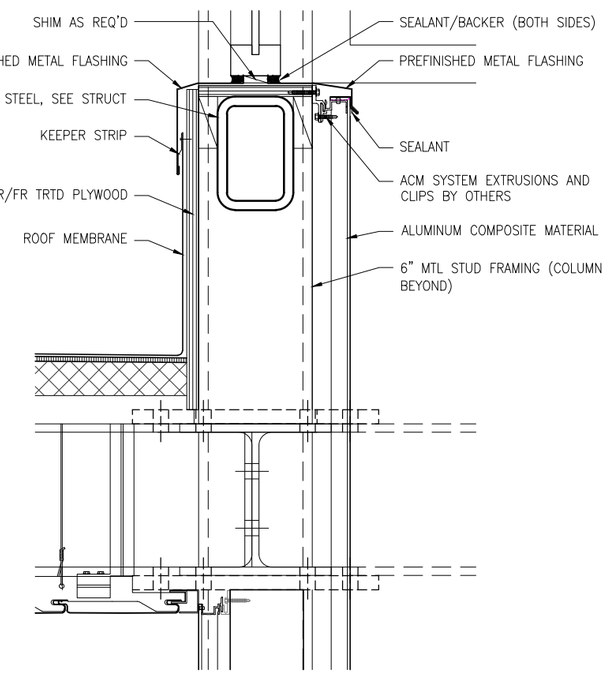

6 SECTION DETAIL AT SCUPPER DRAIN
SCALE: 1 1/2"=1'-0"

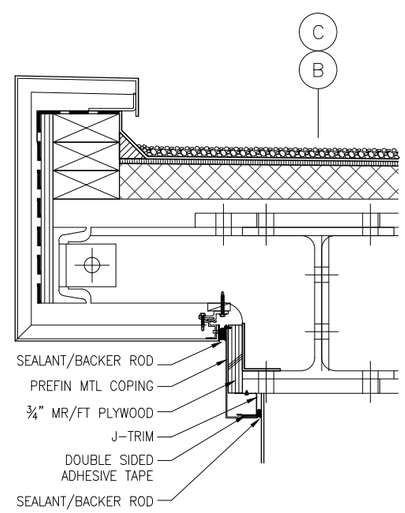

SEE 8/A527 FOR TYP NOTES AND DIMS

7 CANOPY EDGE DETAIL AT BEAM
SCALE: 1 1/2"=1'-0"

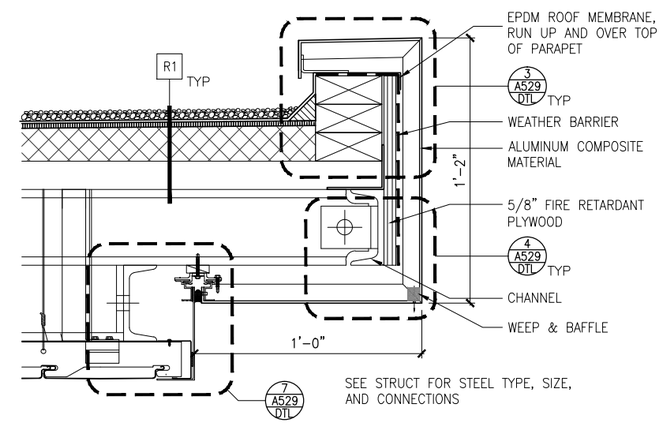

8 CANOPY EDGE DETAIL AT CHANNEL
SCALE: 1 1/2"=1'-0"

NO.	DATE	BY	CHECK	DESIGN	REVISION / SUBMITTAL
.	.	.	.	.	.

AECOM

90% SUBMISSION - 01/22/16

METROPOLITAN COUNCIL

SOUTHWEST Green Line LRT Extension

CIVIL - VOLUME 11E
STATIONS COMMON DETAILS
CANOPY DETAILS

DISCIPLINE: ARCHITECTURE

SHEET NAME: D0-ARC-DTL-527

Jan, 18 2016 11:35 am V:\3400_ADC\CAD\OVERALL\plan sheets\architecture\D0-ARC-DTL-527.dwg By: v-mccarrtp

GENERAL SHEET NOTES

1. SEE SHEET A010 IN VOLUMES 11B, 11C, AND 11D FOR SPECIFIC FINISH/COLOR AT STATION COMPONENTS

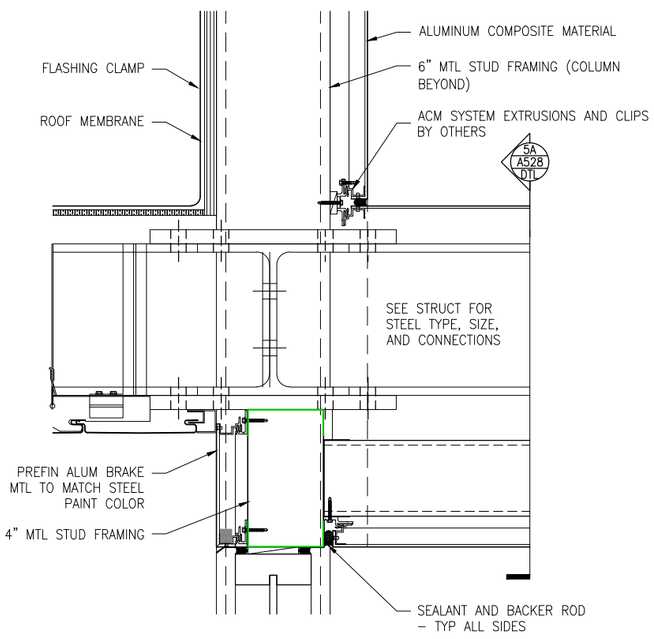

5 PARTIAL PLAN
END CANOPY – TRACK 1
SCALE: 1 1/2"=1'-0"

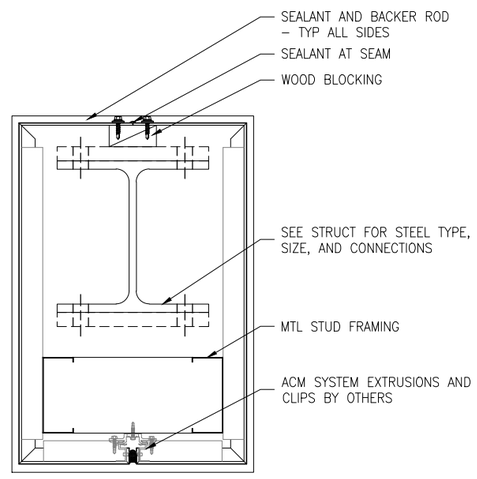

5A

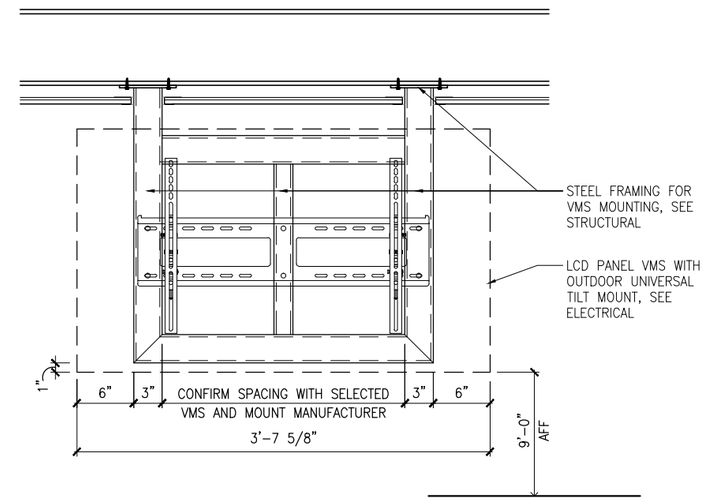

4 ELEVATION DETAIL AT VMS MOUNT
SCALE: 3/4"=1'-0"

0 4" 8" 1'-4"
SCALE

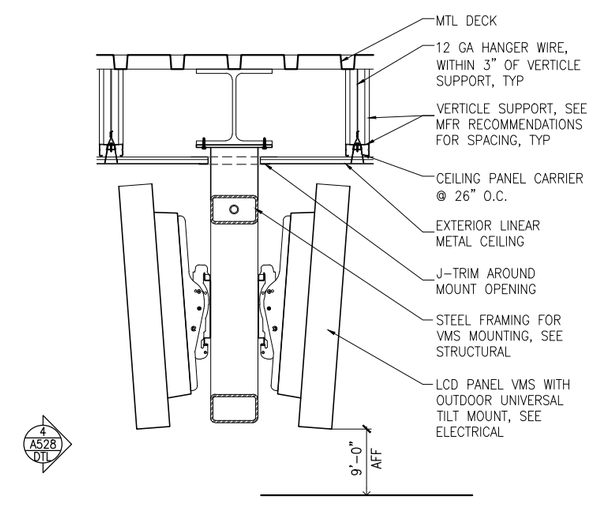

6 SECTION DETAIL AT VMS MOUNT
SCALE: 3/4"=1'-0"

0 4" 8" 1'-4"
SCALE

NO.	DATE	BY	CHECK	DESIGN	REVISION / SUBMITTAL
.	.	.	.	.	.

AECOM

90% SUBMISSION - 01/22/16

METROPOLITAN COUNCIL

SOUTHWEST Green Line LRT Extension

CIVIL - VOLUME 11E
STATIONS COMMON DETAILS
CANOPY DETAILS

DISCIPLINE: ARCHITECTURE

SHEET NAME: D0-ARC-DTL-528

SHEET 33 OF 111

Jan, 18 2016 11:36 am V:\3400_ADC\CAD\OVERALL\plan sheets\architecture\D0-ARC-DTL-528.dwg By: v-mccarrtp

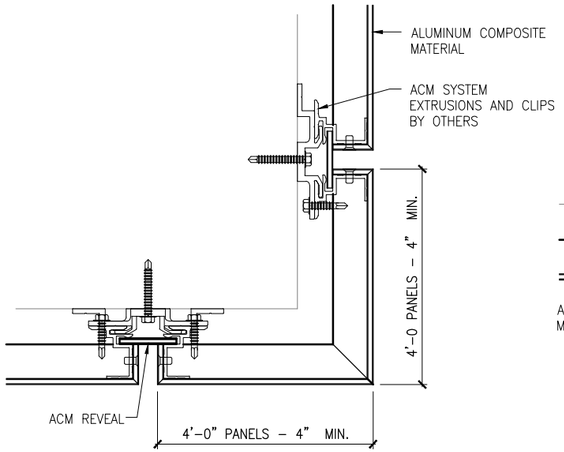

1 OUTSIDE CORNER DETAIL
SCALE: 3"=1'-0"

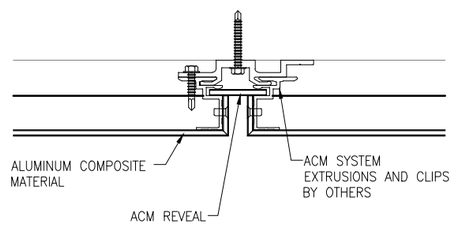

2 VERTICAL JOINT DETAIL
SCALE: 3"=1'-0"

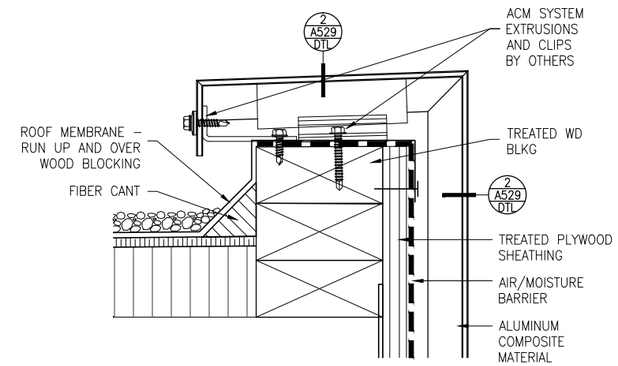

3 PARAPET DETAIL
SCALE: 3"=1'-0"

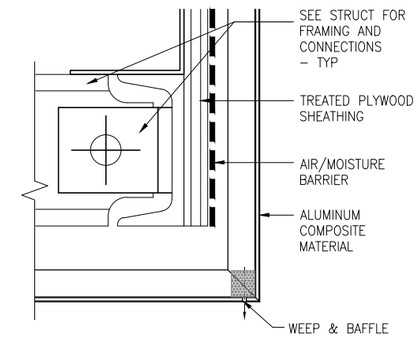

4 WALL/SOFFIT TRANSITION DETAIL
SCALE: 3"=1'-0"

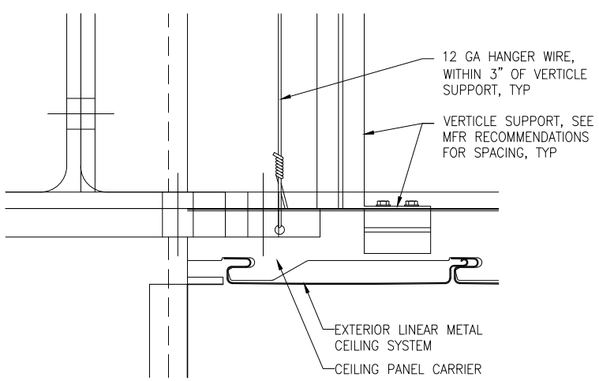

5 WALL/SOFFIT TRANSITION DETAIL
SCALE: 3"=1'-0"

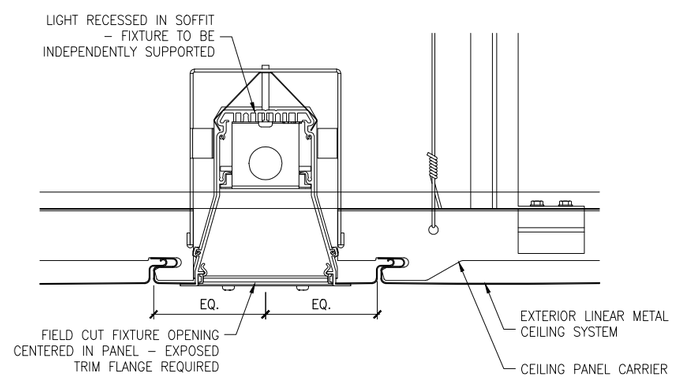

6 LIGHT MOUNTING DETAIL
SCALE: 3"=1'-0"

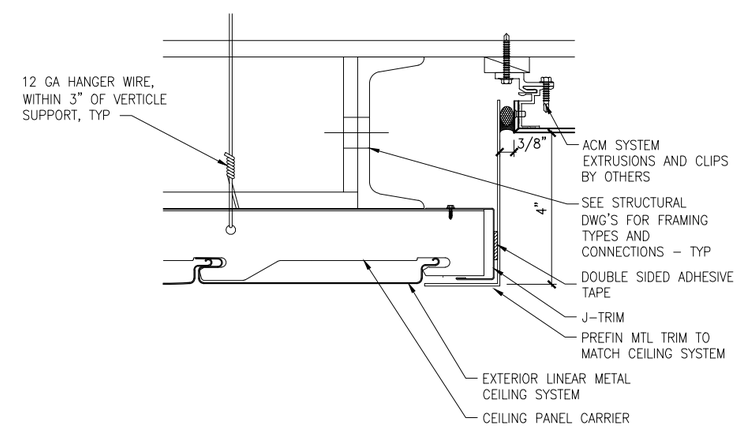

7 FASCIA/SOFFIT TRANSITION DETAIL
SCALE: 3"=1'-0"

NO.	DATE	BY	CHECK	DESIGN	REVISION / SUBMITTAL
.	.	.	.	.	.

AECOM

90% SUBMISSION - 01/22/16

METROPOLITAN COUNCIL

SOUTHWEST Green Line LRT Extension

CIVIL - VOLUME 11E
STATIONS COMMON DETAILS
CANOPY DETAILS

DISCIPLINE: ARCHITECTURE

SHEET NAME: D0-ARC-DTL-529

SHEET 34 OF 111

Jan, 18 2016 11:36 am V:\3400_ADC\CAD\OVERALL\plan sheets\architecture\D0-ARC-DTL-529.dwg By: v-mccartp

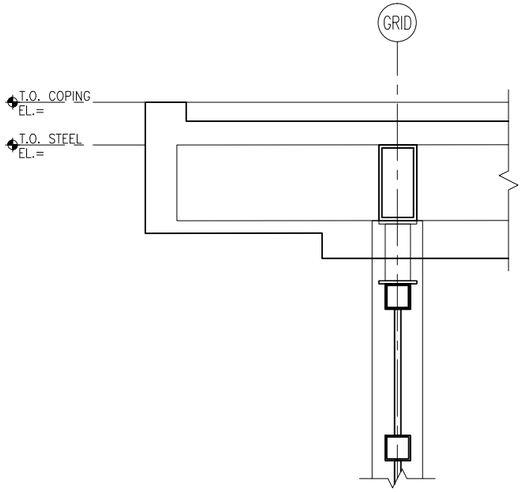

1 SECTION DETAIL
SCALE:1/2"=1'-0"
0 6" 1' 2'
SCALE

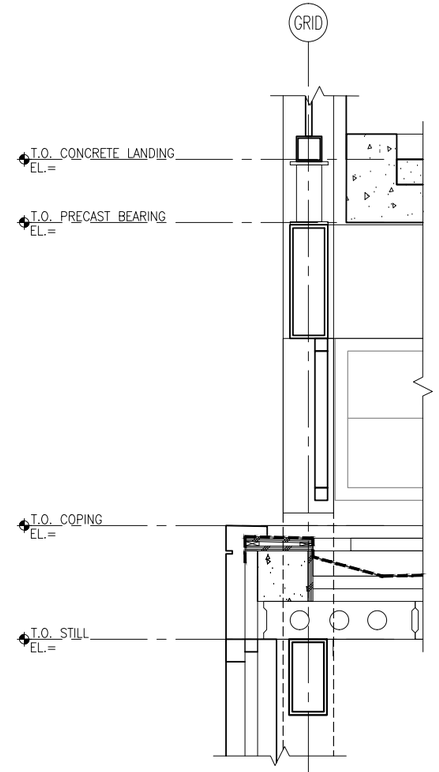

3 SECTION DETAIL
SCALE:1/2"=1'-0"
0 6" 1' 2'
SCALE

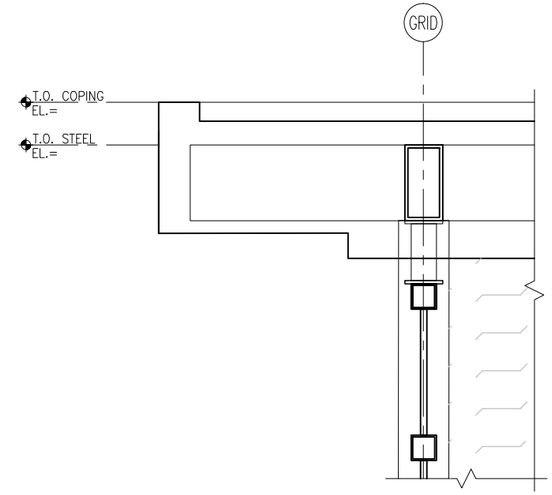

5 SECTION DETAIL
SCALE:1/2"=1'-0"
0 6" 1' 2'
SCALE

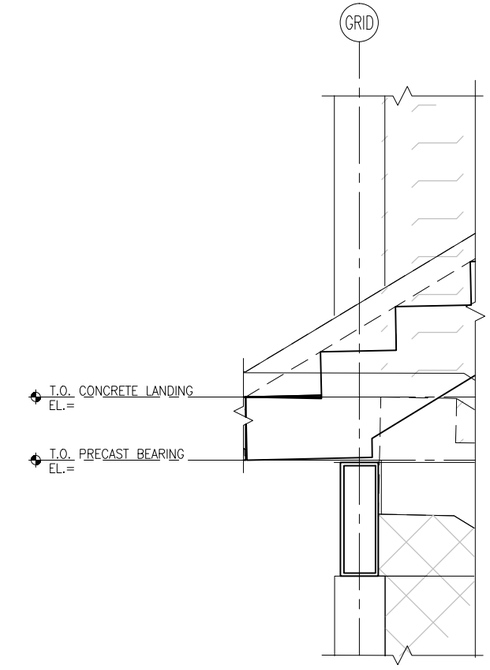

7 SECTION DETAIL
SCALE:1/2"=1'-0"
0 6" 1' 2'
SCALE

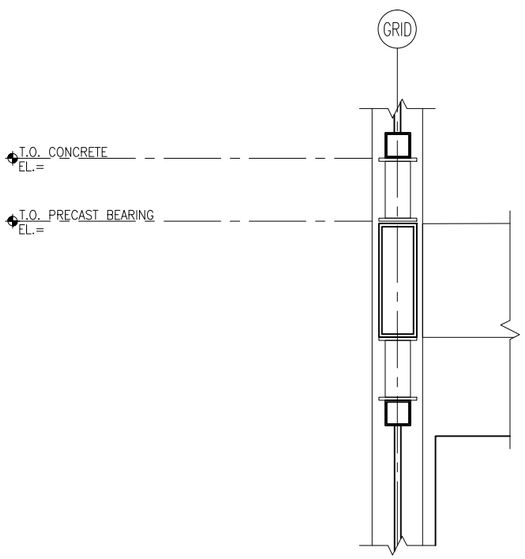

2 SECTION DETAIL
SCALE:1/2"=1'-0"
0 6" 1' 2'
SCALE

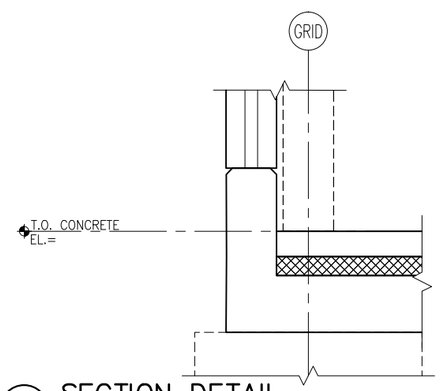

4 SECTION DETAIL
SCALE:1/2"=1'-0"
0 6" 1' 2'
SCALE

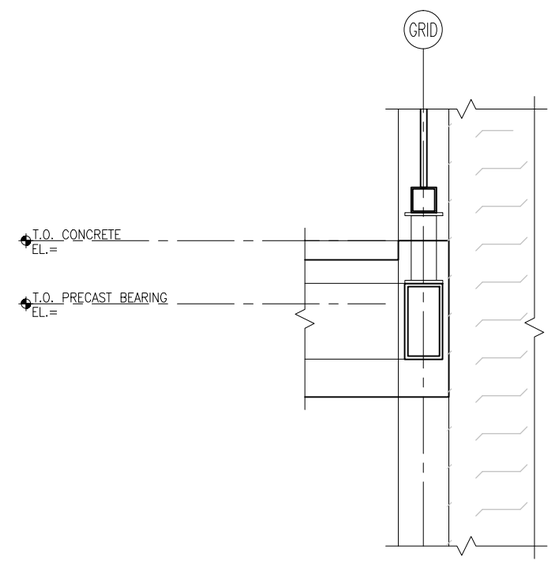

6 SECTION DETAIL
SCALE:1/2"=1'-0"
0 6" 1' 2'
SCALE

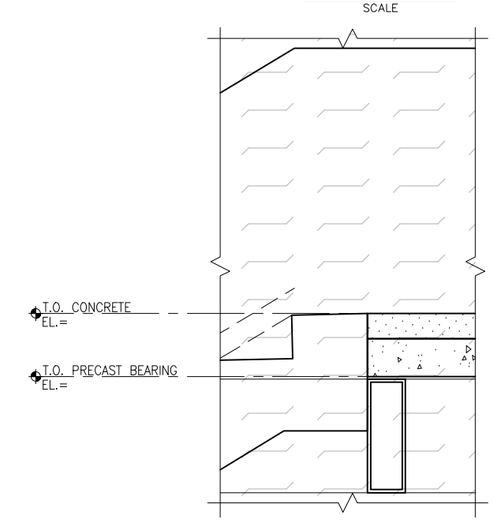

8 SECTION DETAIL
SCALE:1/2"=1'-0"
0 6" 1' 2'
SCALE

NO.	DATE	BY	CHECK	DESIGN	REVISION / SUBMITTAL
.	.	.	.	.	.

AECOM

90% SUBMISSION - 01/22/16

METROPOLITAN COUNCIL

SOUTHWEST Green Line LRT Extension

CIVIL - VOLUME 11E
STATIONS COMMON DETAILS
VC SECTION DETAILS

DISCIPLINE: ARCHITECTURE

SHEET NAME: D0-ARC-DTL-530

SHEET 35 OF 111

Jan, 18 2016 11:36 am V:\3400_ADC\CAD\OVERALL\plan sheets\architecture\D0-ARC-DTL-530.dwg By: v-mccartp

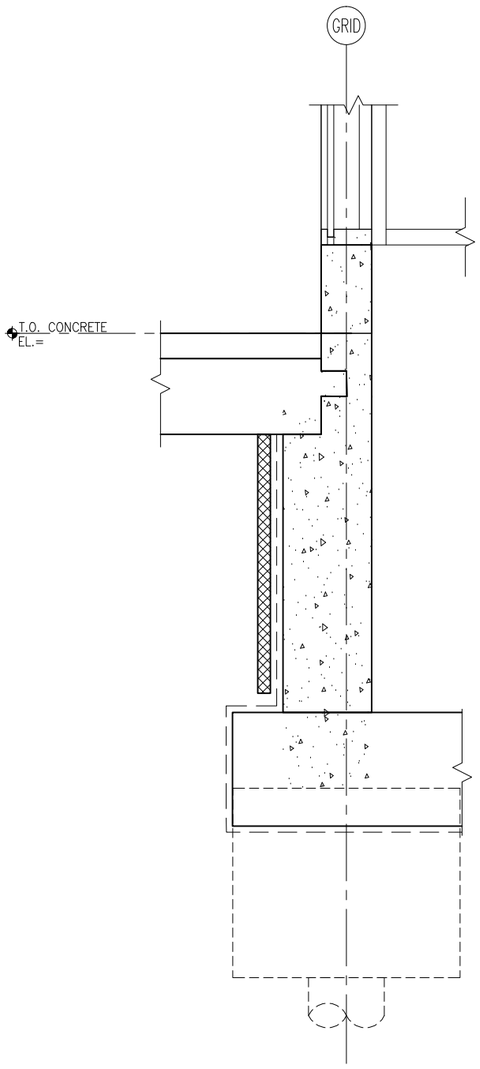

1 SECTION DETAIL
SCALE:1/2"=1'-0"
0 6" 1' 2'
SCALE

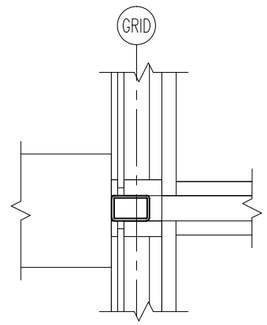

2 SECTION DETAIL
SCALE:1/2"=1'-0"
0 6" 1' 2'
SCALE

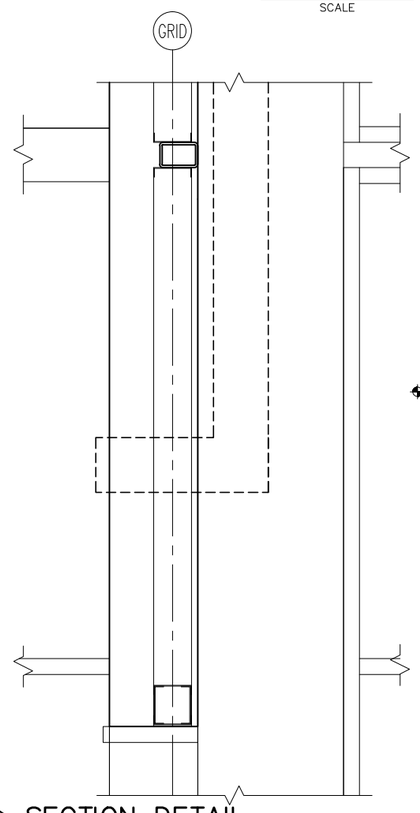

3 SECTION DETAIL
SCALE:1/2"=1'-0"
0 6" 1' 2'
SCALE

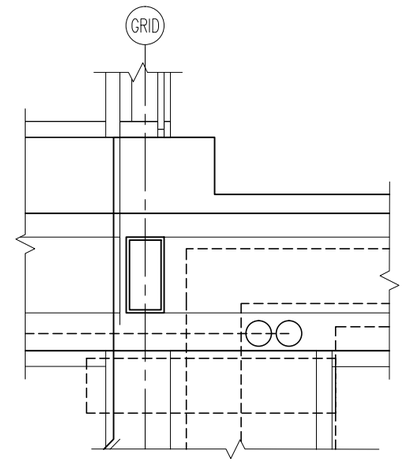

4 SECTION DETAIL
SCALE:1/2"=1'-0"
0 6" 1' 2'
SCALE

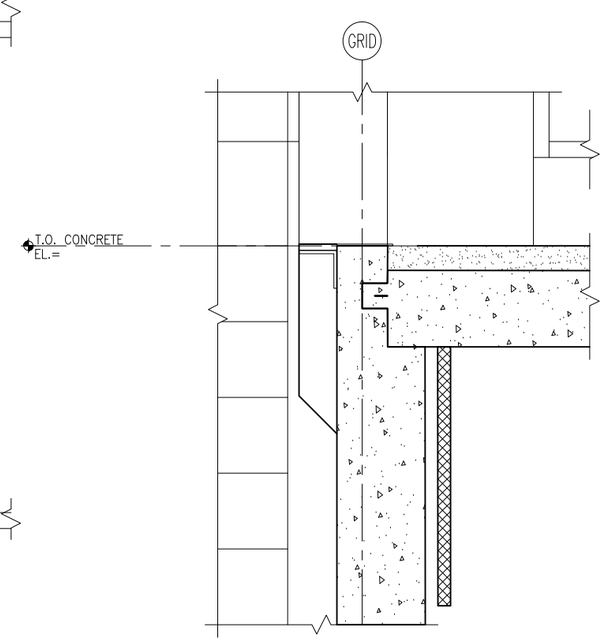

5 SECTION DETAIL
SCALE:1/2"=1'-0"
0 6" 1' 2'
SCALE

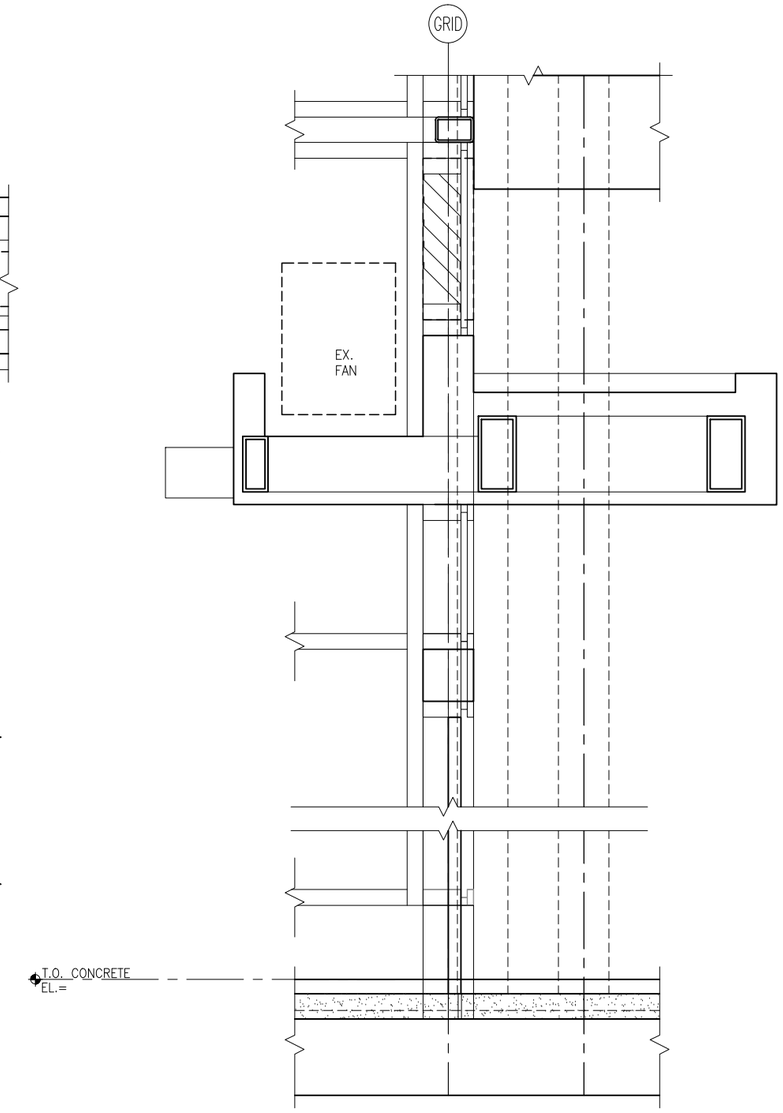

6 SECTION DETAIL
SCALE:1/2"=1'-0"
0 6" 1' 2'
SCALE

NO.	DATE	BY	CHECK	DESIGN	REVISION / SUBMITTAL
.	.	.	.	.	.

AECOM

90% SUBMISSION - 01/22/16

METROPOLITAN COUNCIL

SOUTHWEST Green Line LRT Extension

CIVIL - VOLUME 11E
STATIONS COMMON DETAILS
VC SECTION DETAILS

DISCIPLINE: ARCHITECTURE

SHEET NAME: D0-ARC-DTL-531

SHEET 36 OF 111

Jan, 18 2016 11:37 am V:\3400_ADC\CAD\OVERALL\plan sheets\architecture\D0-ARC-DTL-531.dwg By: v-mccarrtp

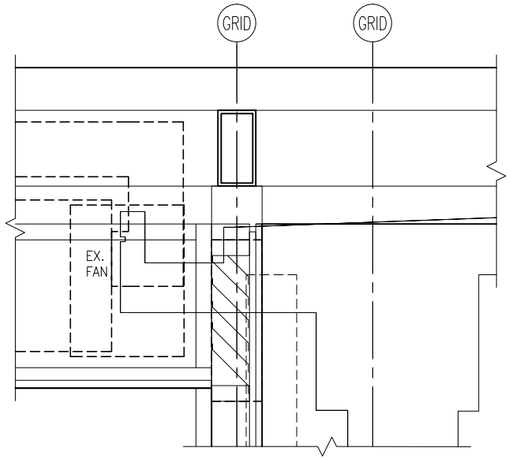

1 SECTION DETAIL
SCALE:1/2"=1'-0"
0 6" 1' 2'
SCALE

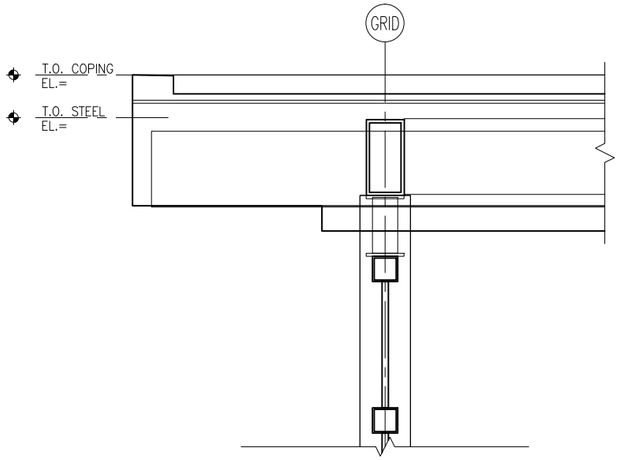

3 SECTION DETAIL
SCALE:1/2"=1'-0"
0 6" 1' 2'
SCALE

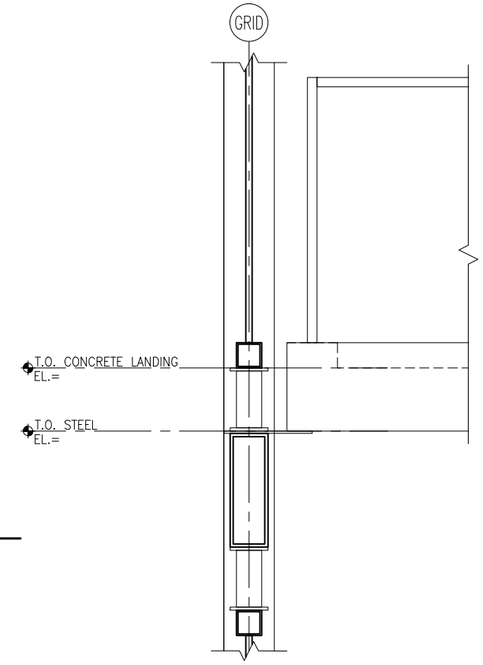

4 SECTION DETAIL
SCALE:1/2"=1'-0"
0 6" 1' 2'
SCALE

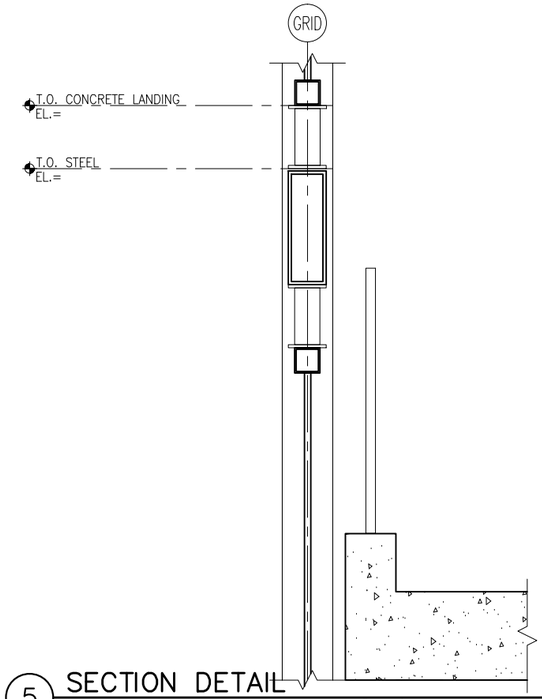

5 SECTION DETAIL
SCALE:1/2"=1'-0"
0 6" 1' 2'
SCALE

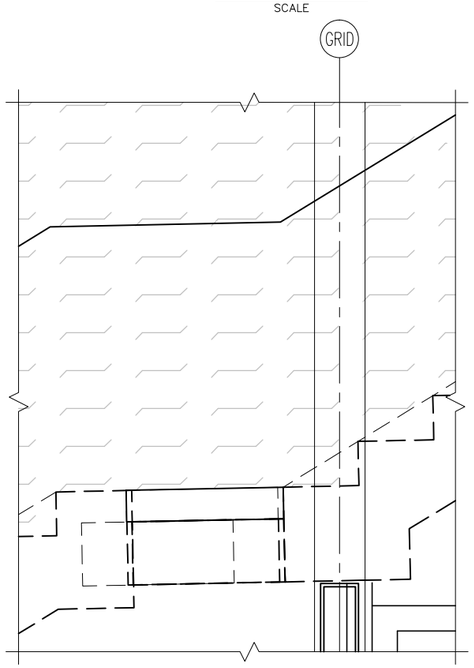

2 SECTION DETAIL
SCALE:1/2"=1'-0"
0 6" 1' 2'
SCALE

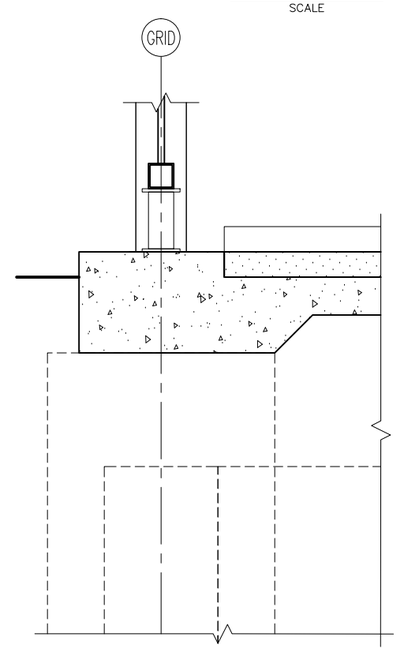

6 SECTION DETAIL
SCALE:1/2"=1'-0"
0 6" 1' 2'
SCALE

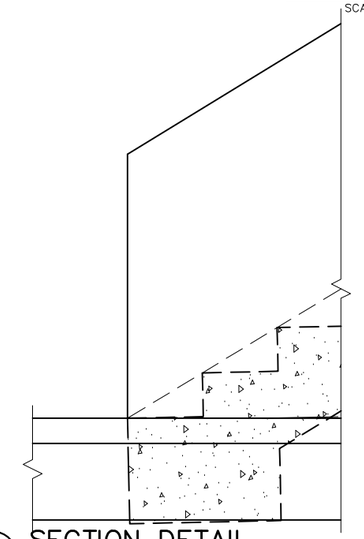

7 SECTION DETAIL
SCALE:1/2"=1'-0"
0 6" 1' 2'
SCALE

NO.	DATE	BY	CHECK	DESIGN	REVISION / SUBMITTAL
.	.	.	.	.	.

AECOM

90% SUBMISSION - 01/22/16

METROPOLITAN COUNCIL

SOUTHWEST Green Line LRT Extension

CIVIL - VOLUME 11E
STATIONS COMMON DETAILS
VC SECTION DETAILS

DISCIPLINE: ARCHITECTURE

SHEET NAME: D0-ARC-DTL-532

SHEET 37 OF 111

Jan, 18 2016 11:37 am V:\3400_ADC\CAD\OVERALL\plan sheets\architecture\D0-ARC-DTL-532.dwg By: v-mccarrtp

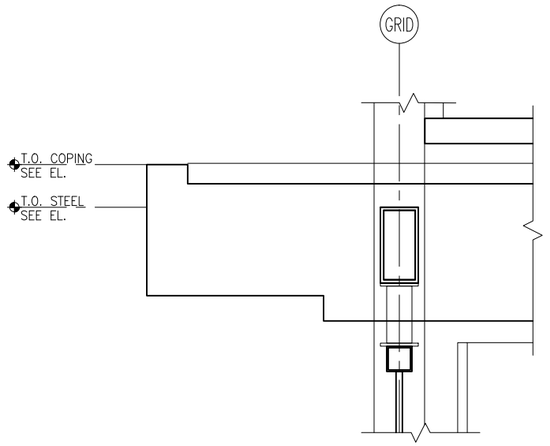

1 SECTION DETAIL
SCALE:1/2"=1'-0"
0 6" 1' 2'
SCALE

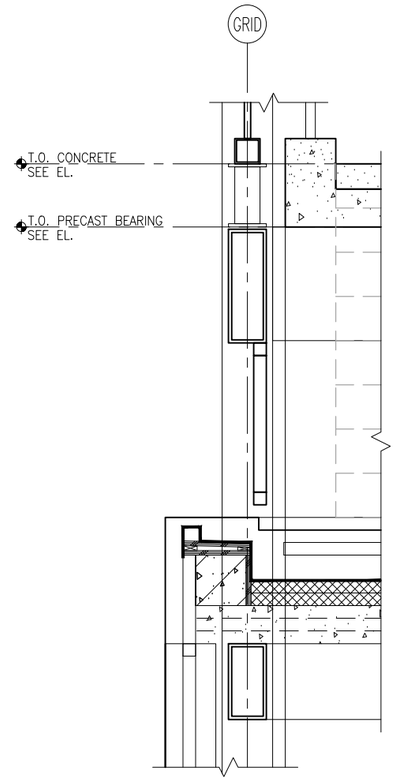

3 SECTION DETAIL
SCALE:1/2"=1'-0"
0 6" 1' 2'
SCALE

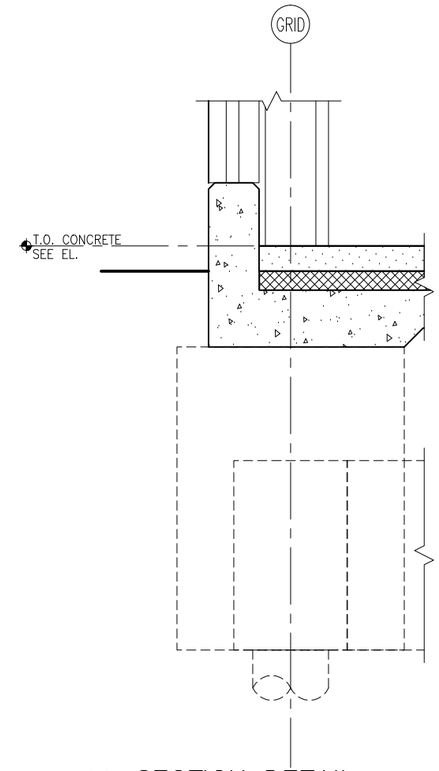

4 SECTION DETAIL
SCALE:1/2"=1'-0"
0 6" 1' 2'
SCALE

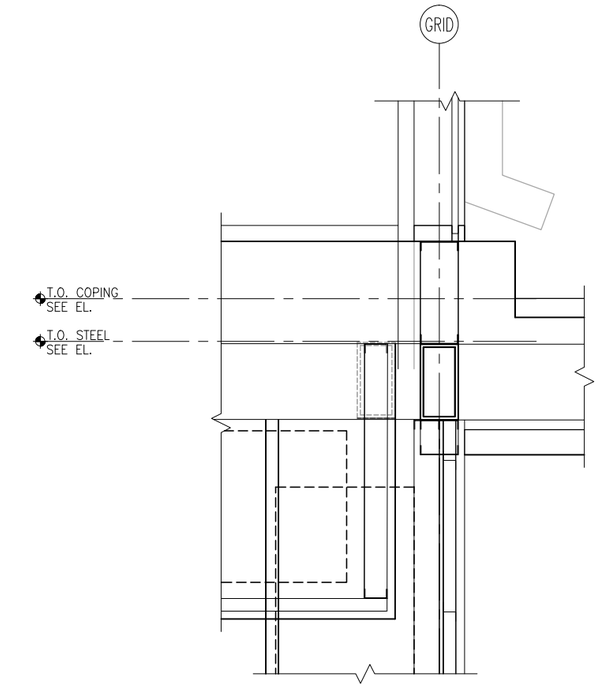

5 SECTION DETAIL
SCALE:1/2"=1'-0"
0 6" 1' 2'
SCALE

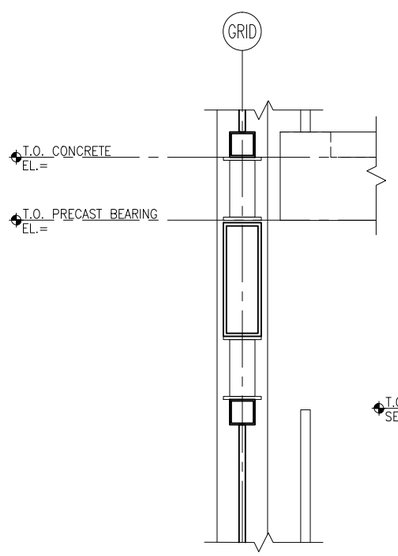

2 SECTION DETAIL
SCALE:1/2"=1'-0"
0 6" 1' 2'
SCALE

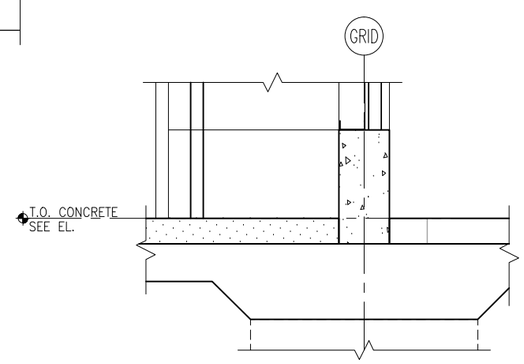

8 SECTION DETAIL
SCALE:1/2"=1'-0"
0 6" 1' 2'
SCALE

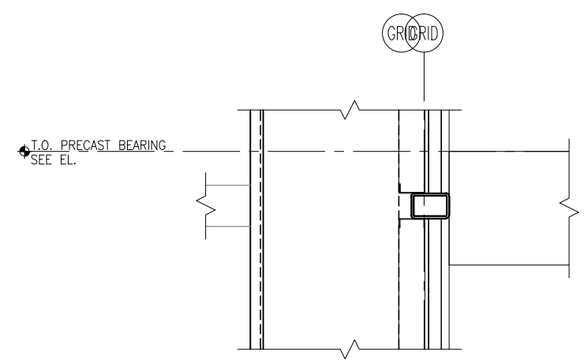

7 SECTION DETAIL
SCALE:1/2"=1'-0"
0 6" 1' 2'
SCALE

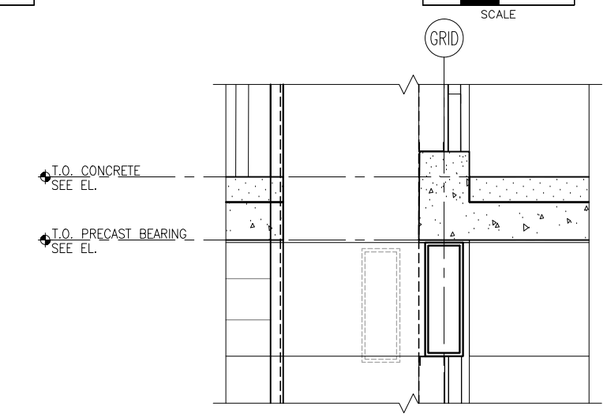

6 SECTION DETAIL
SCALE:1/2"=1'-0"
0 6" 1' 2'
SCALE

NO.	DATE	BY	CHECK	DESIGN	REVISION / SUBMITTAL
.	.	.	.	.	.

AECOM

90% SUBMISSION - 01/22/16

METROPOLITAN COUNCIL

SOUTHWEST Green Line LRT Extension

CIVIL - VOLUME 11E
STATIONS COMMON DETAILS
VC SECTION DETAILS

DISCIPLINE: ARCHITECTURE

SHEET NAME: D0-ARC-DTL-533

SHEET 38 OF 111

Jan, 18 2016 11:37 am V:\3400_ADC\CAD\OVERALL\plan sheets\architecture\D0-ARC-DTL-533.dwg By: v-mccarrtp

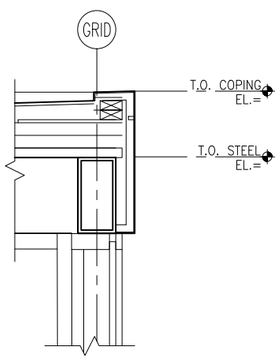

1 SECTION DETAIL
SCALE:1/2"=1'-0"

0 6" 1' 2'
SCALE

NO.	DATE	BY	CHECK	DESIGN	REVISION / SUBMITTAL
.	.	.	.	.	.

AECOM

90% SUBMISSION - 01/22/16

METROPOLITAN COUNCIL

SOUTHWEST Green Line LRT Extension

CIVIL - VOLUME 11E
STATIONS COMMON DETAILS
VC SECTION DETAILS

DISCIPLINE: ARCHITECTURE

SHEET NAME: D0-ARC-DTL-534

SHEET 39 OF 111

Jan, 18 2016 11:37 am V:\3400_ADC\CAD\OVERALL\plan sheets\architecture\D0-ARC-DTL-534.dwg By: v-mccartip

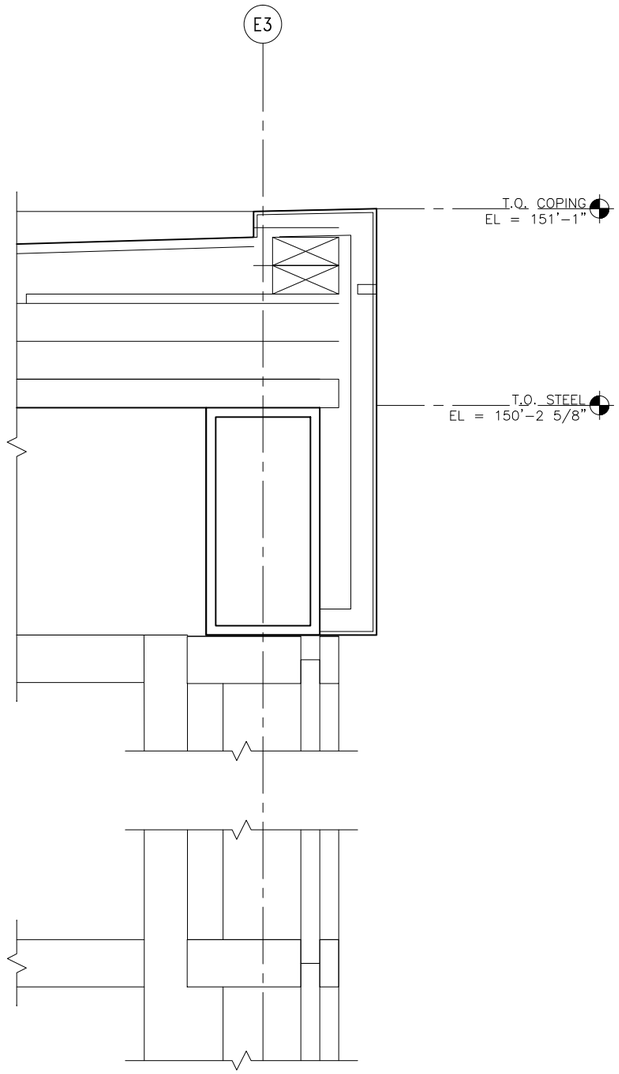

1 VC SECTION DETAILS
SCALE: 1 1/2"=1'-0"

0 2" 4" 8"
SCALE

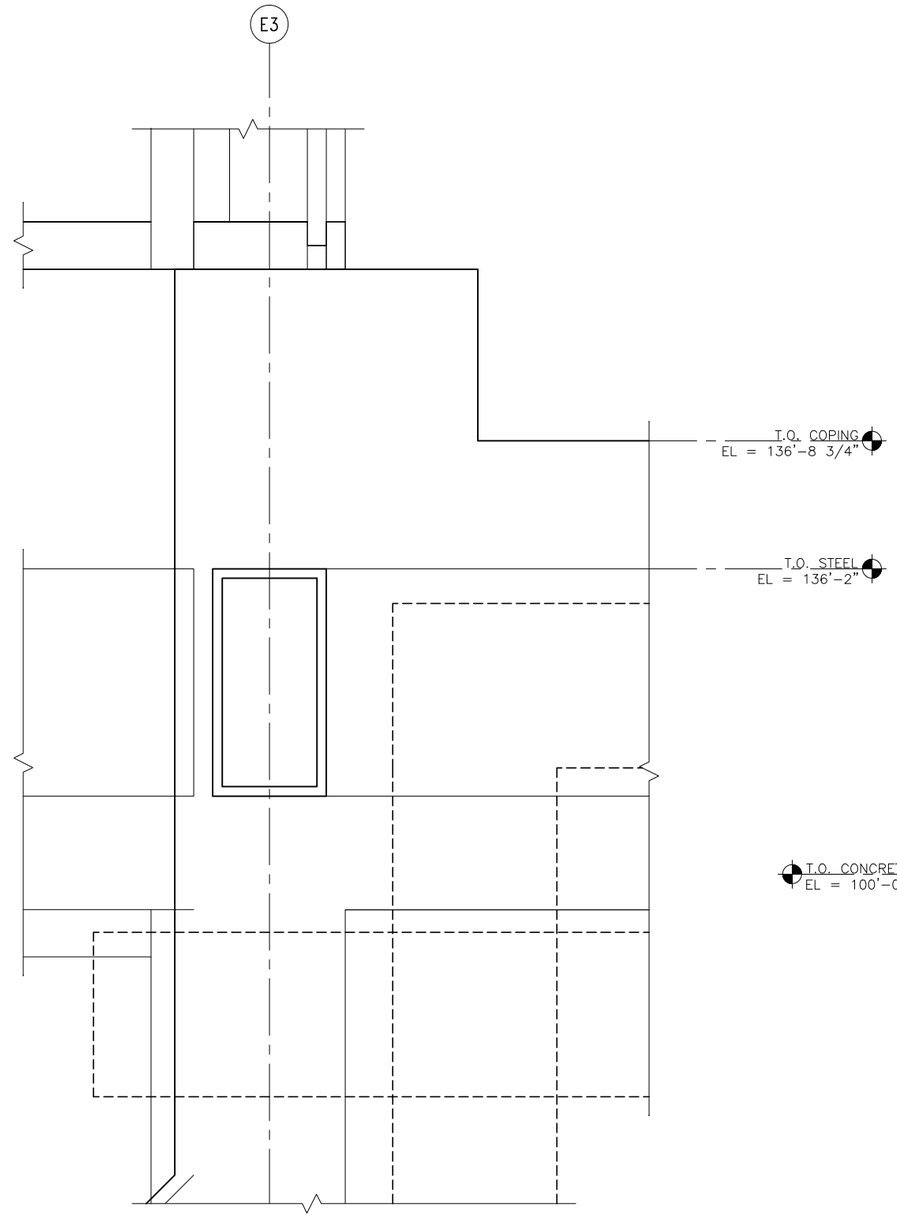

2 VC SECTION DETAILS
SCALE: 1 1/2"=1'-0"

0 2" 4" 8"
SCALE

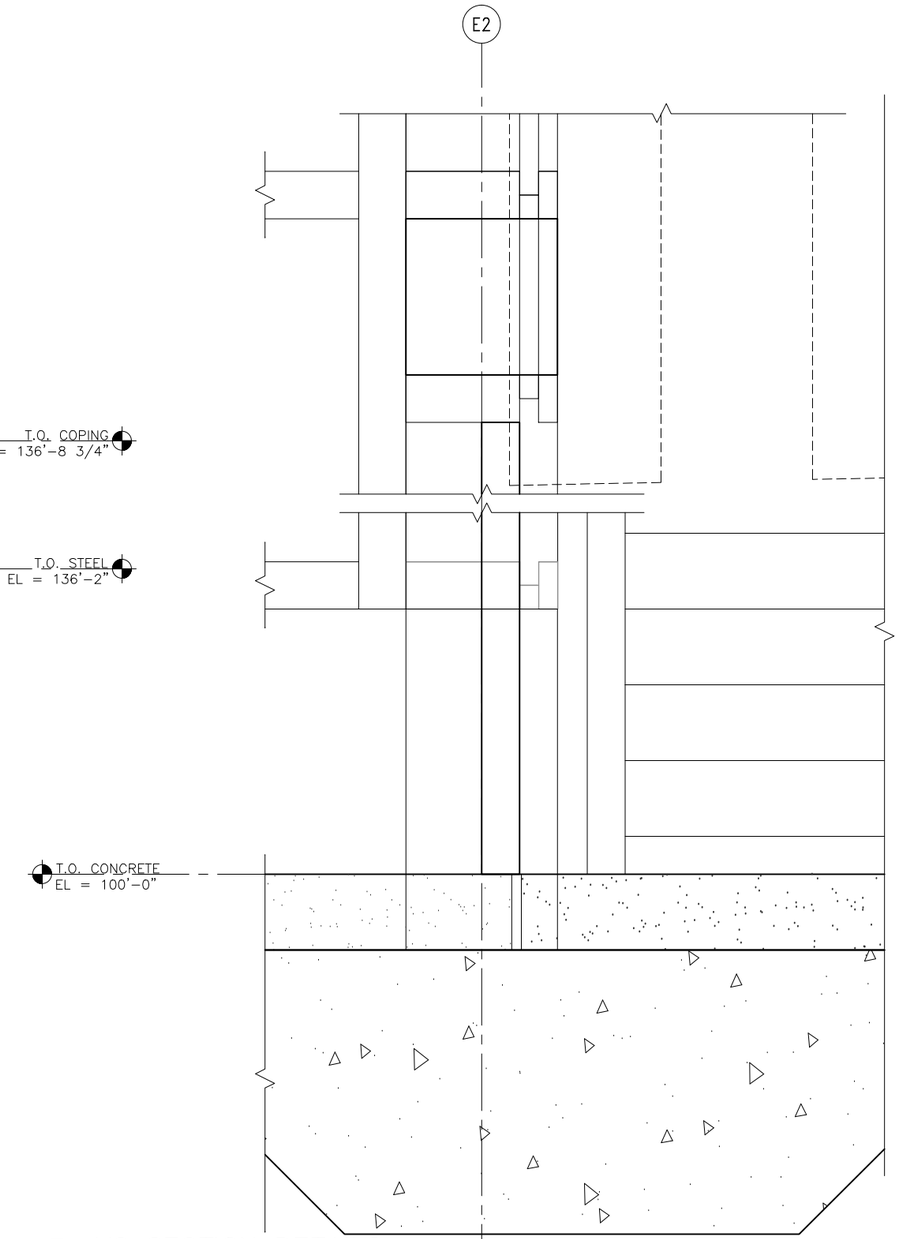

3 VC SECTION DETAILS
SCALE: 1 1/2"=1'-0"

0 2" 4" 8"
SCALE

NO.	DATE	BY	CHECK	DESIGN	REVISION / SUBMITTAL
.	.	.	.	.	.

AECOM

90% SUBMISSION - 01/22/16

METROPOLITAN COUNCIL

SOUTHWEST Green Line LRT Extension

CIVIL - VOLUME 11E
STATIONS COMMON DETAILS
VC SECTION DETAILS

DISCIPLINE: ARCHITECTURE

SHEET NAME: D0-ARC-DTL-535

SHEET 40 OF 111

Jan, 18 2016 11:38 am V:\3400_ADC\CAD\OVERALL\plan sheets\architecture\D0-ARC-DTL-535.dwg By: v-mccarrtp

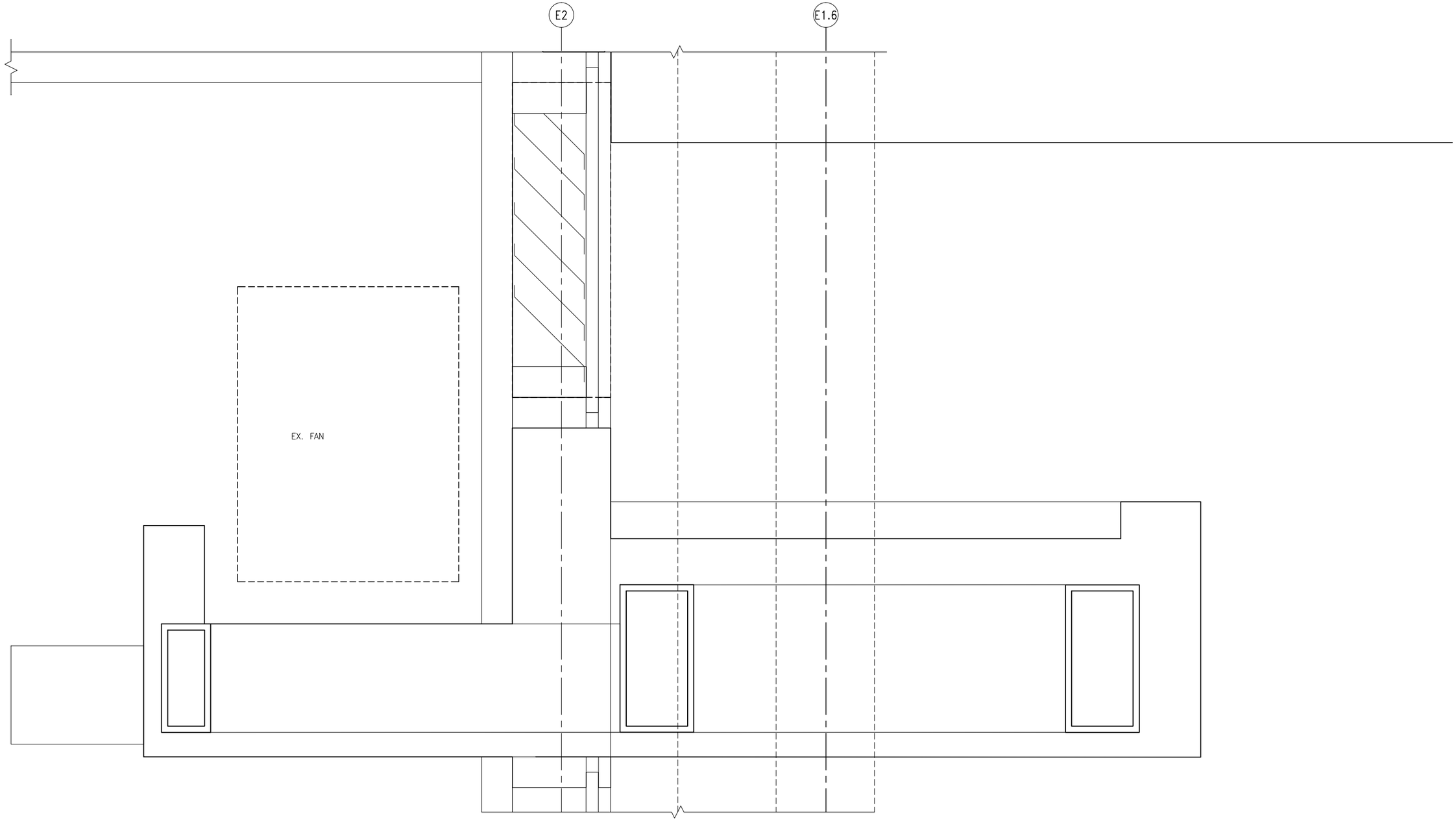

1 VC SECTION DETAILS
SCALE: 1 1/2"=1'-0"

0 2" 4" 8"
SCALE

NO.	DATE	BY	CHECK	DESIGN	REVISION / SUBMITTAL
.	.	.	.	.	.

AECOM

90% SUBMISSION - 01/22/16

METROPOLITAN COUNCIL

SOUTHWEST Green Line LRT Extension

CIVIL - VOLUME 11E
STATIONS COMMON DETAILS
VC SECTION DETAILS

DISCIPLINE: ARCHITECTURE

SHEET NAME: D0-ARC-DTL-536

SHEET 41 OF 111

Jan, 18 2016 11:38 am V:\3400_ADC\CAD\OVERALL\plan sheets\architecture\D0-ARC-DTL-536.dwg By: v-mccarrtp

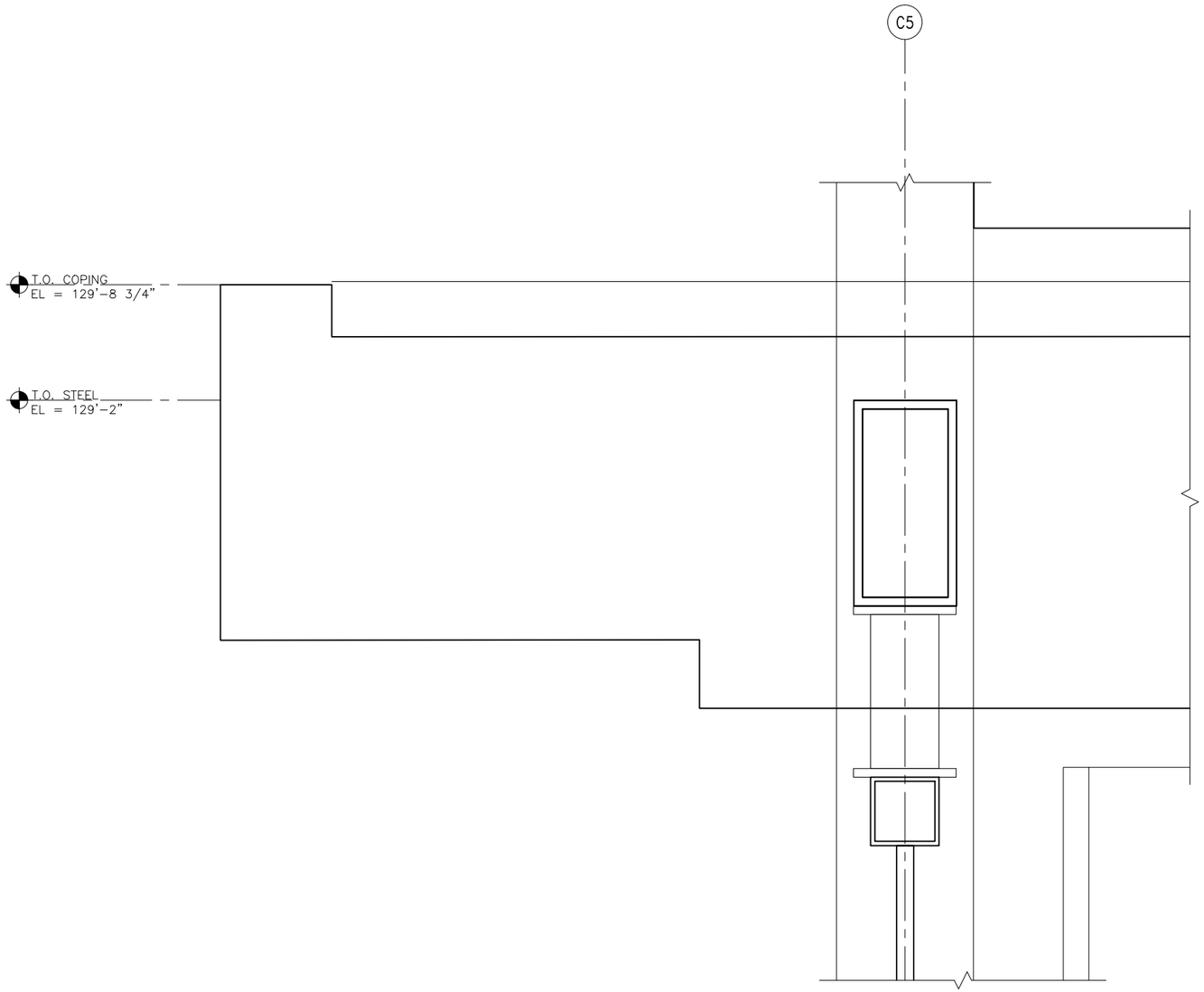

1 VC SECTION DETAILS
SCALE: 1 1/2"=1'-0"

0 2" 4" 8"
SCALE

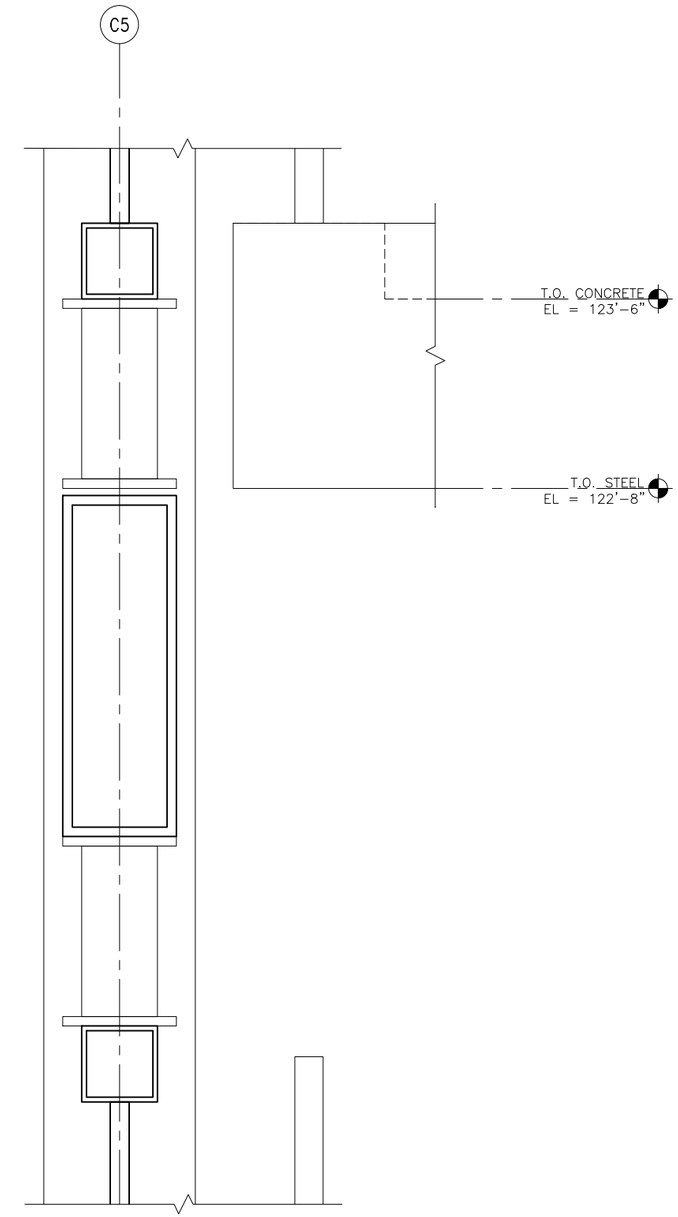

2 VC SECTION DETAILS
SCALE: 1 1/2"=1'-0"

0 2" 4" 8"
SCALE

NO.	DATE	BY	CHECK	DESIGN	REVISION / SUBMITTAL
.	.	.	.	.	.

AECOM

90% SUBMISSION - 01/22/16

METROPOLITAN COUNCIL

SOUTHWEST Green Line LRT Extension

CIVIL - VOLUME 11E
STATIONS COMMON DETAILS
VC SECTION DETAILS

DISCIPLINE: ARCHITECTURE

SHEET NAME: D0-ARC-DTL-537

SHEET 42 OF 111

Jan, 18 2016 11:38 am V:\3400_ADC\CAD\OVERALL\plan sheets\architecture\D0-ARC-DTL-537.dwg By: v-mccarrtp

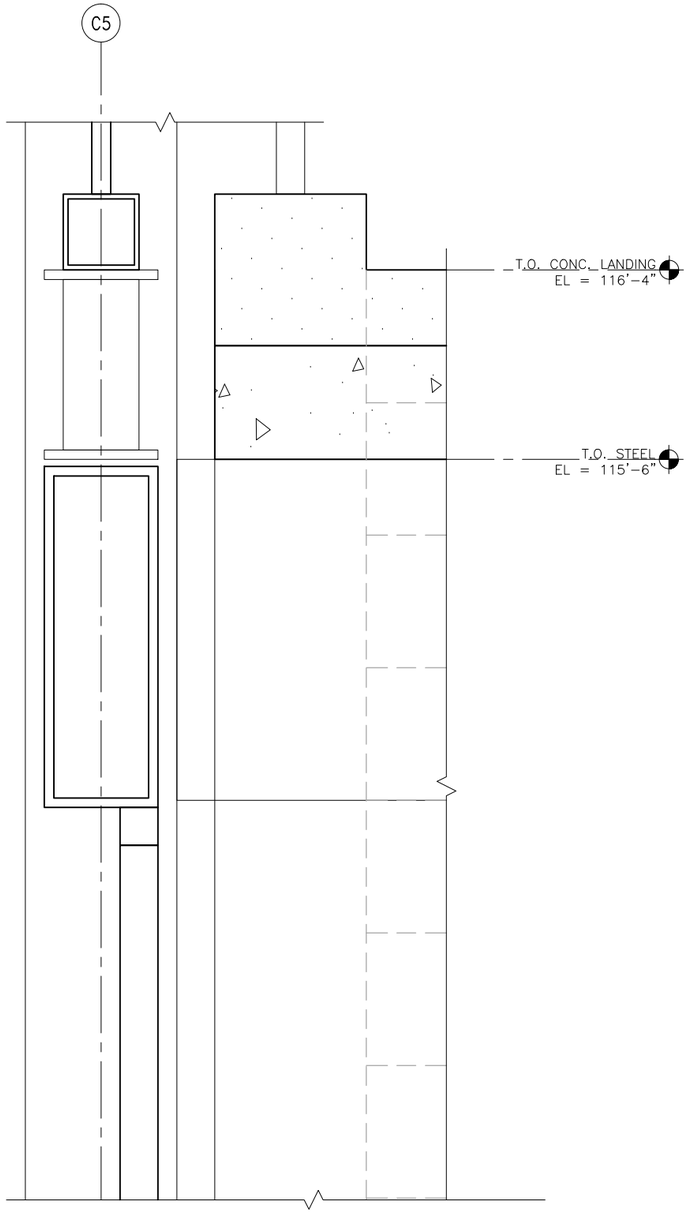

1 VC SECTION DETAILS
SCALE: 1 1/2"=1'-0"

0 2" 4" 8"
SCALE

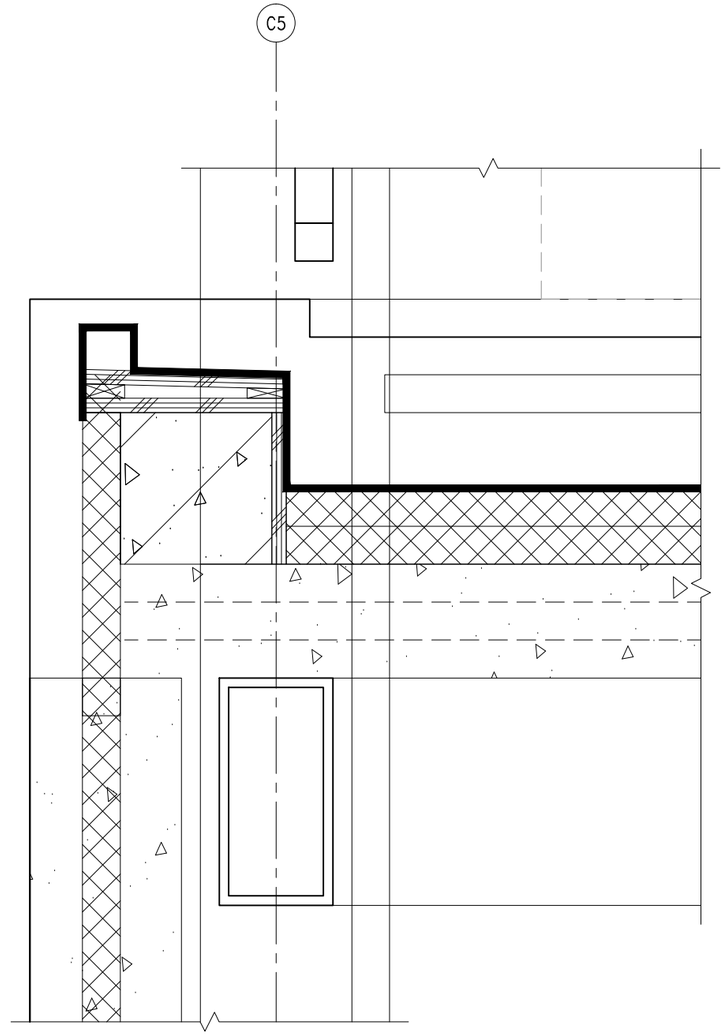

2 VC SECTION DETAILS
SCALE: 1 1/2"=1'-0"

0 2" 4" 8"
SCALE

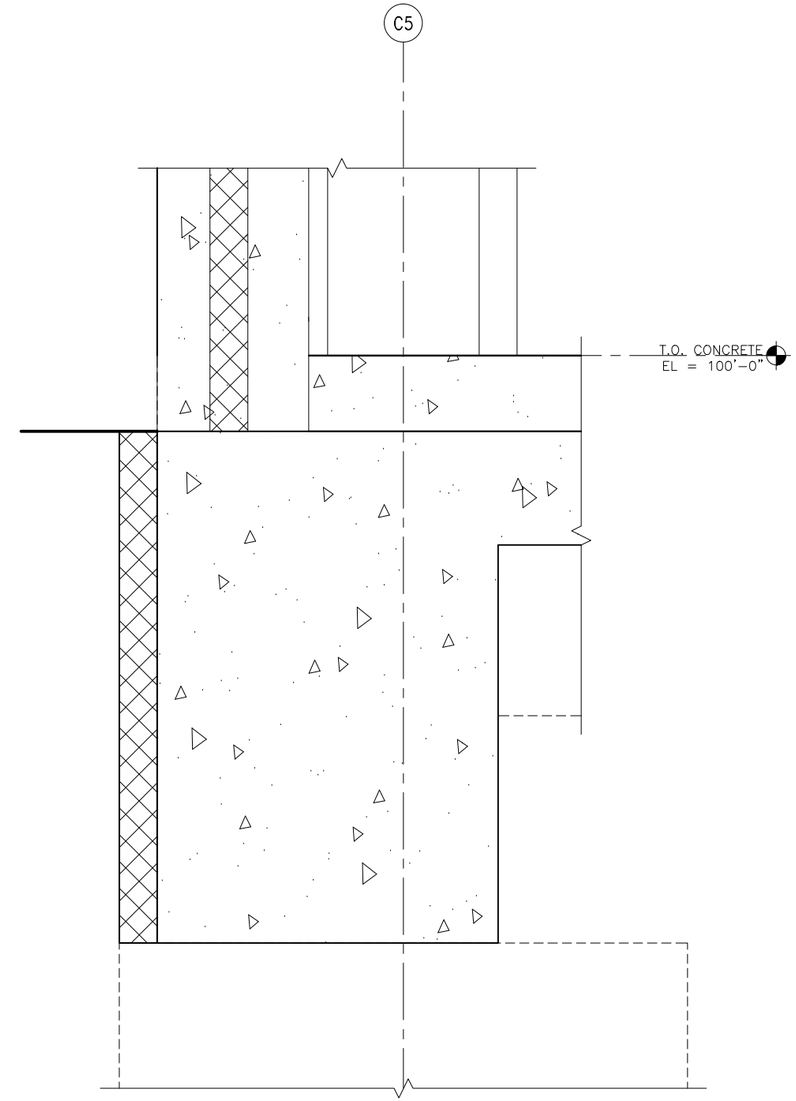

3 VC SECTION DETAILS
SCALE: 1 1/2"=1'-0"

0 2" 4" 8"
SCALE

NO.	DATE	BY	CHECK	DESIGN	REVISION / SUBMITTAL
.	.	.	.	.	.

AECOM

90% SUBMISSION - 01/22/16

METROPOLITAN COUNCIL

SOUTHWEST Green Line LRT Extension

CIVIL - VOLUME 11E
STATIONS COMMON DETAILS
VC SECTION DETAILS

DISCIPLINE: ARCHITECTURE

SHEET NAME: D0-ARC-DTL-538

SHEET 43 OF 111

Jan, 18 2016 11:38 am V:\3400_ADC\CAD\OVERALL\plan sheets\architecture\D0-ARC-DTL-538.dwg By: v-mccarrtp

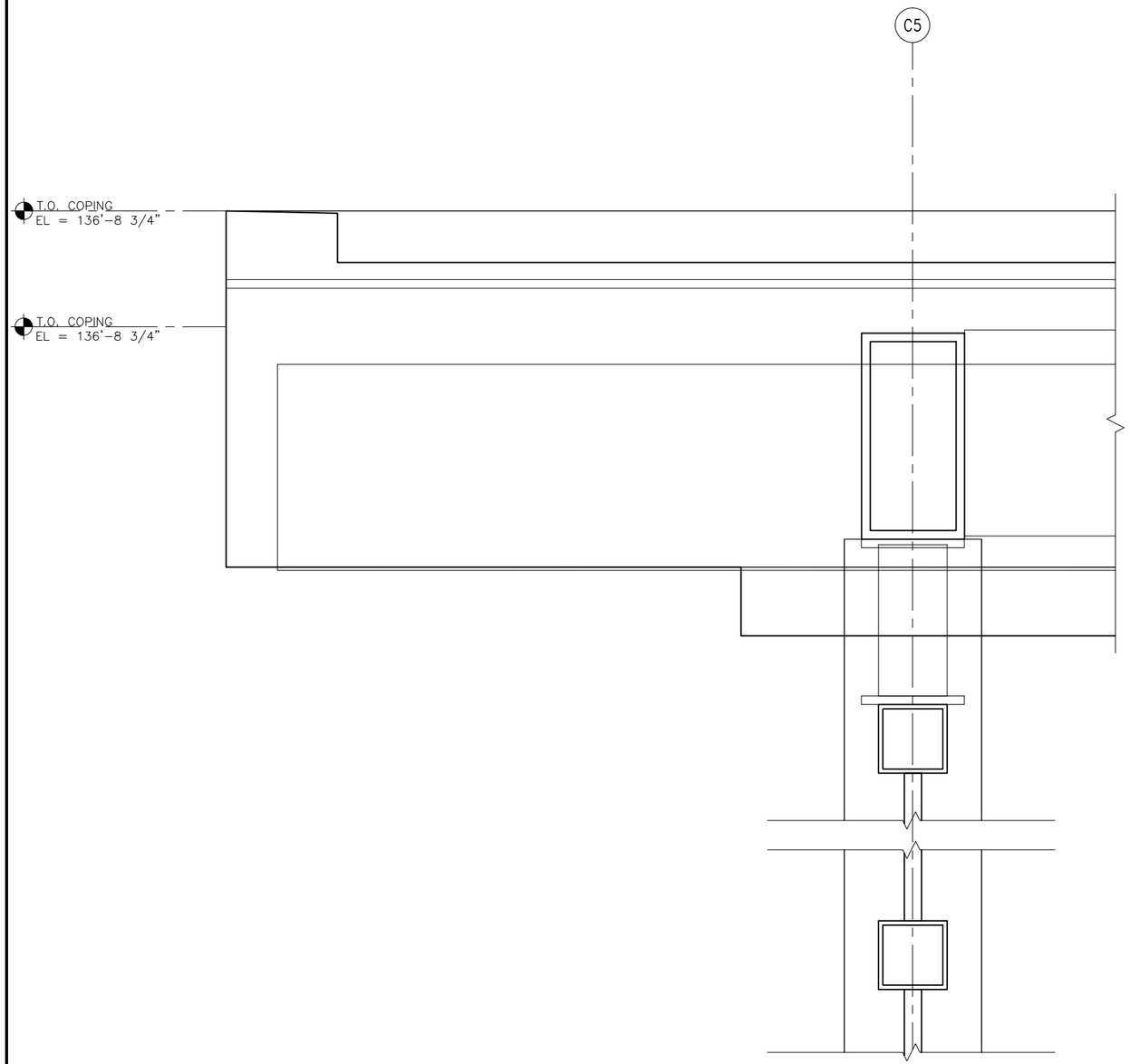

1 VC SECTION DETAILS
SCALE: 1 1/2"=1'-0"

0 2" 4" 8"
SCALE

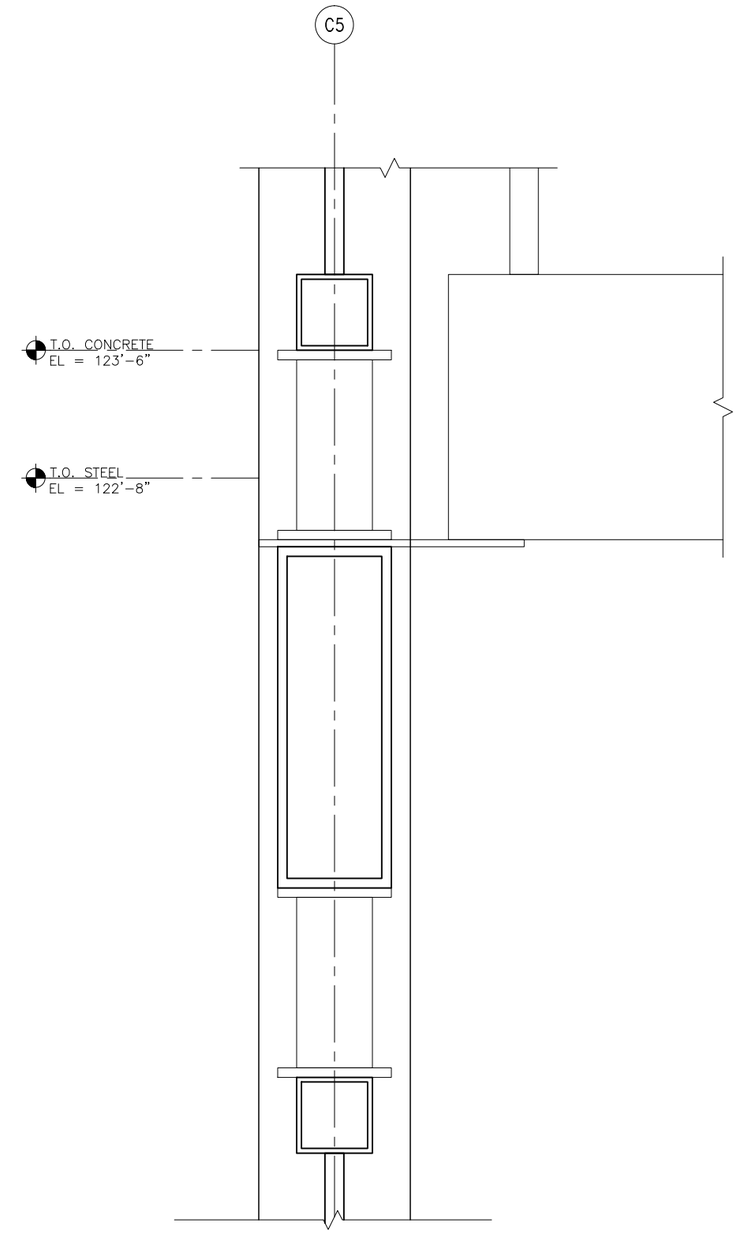

2 VC SECTION DETAILS
SCALE: 1 1/2"=1'-0"

0 2" 4" 8"
SCALE

NO.	DATE	BY	CHECK	DESIGN	REVISION / SUBMITTAL
.	.	.	.	.	.

AECOM

90% SUBMISSION - 01/22/16

METROPOLITAN COUNCIL

SOUTHWEST Green Line LRT Extension

CIVIL - VOLUME 11E
STATIONS COMMON DETAILS
VC SECTION DETAILS

DISCIPLINE: ARCHITECTURE

SHEET NAME: D0-ARC-DTL-539

SHEET 44 OF 111

Jan, 18 2016 11:39 am V:\3400_ADC\CAD\OVERALL\plan sheets\architecture\D0-ARC-DTL-539.dwg By: v-mccarrtp

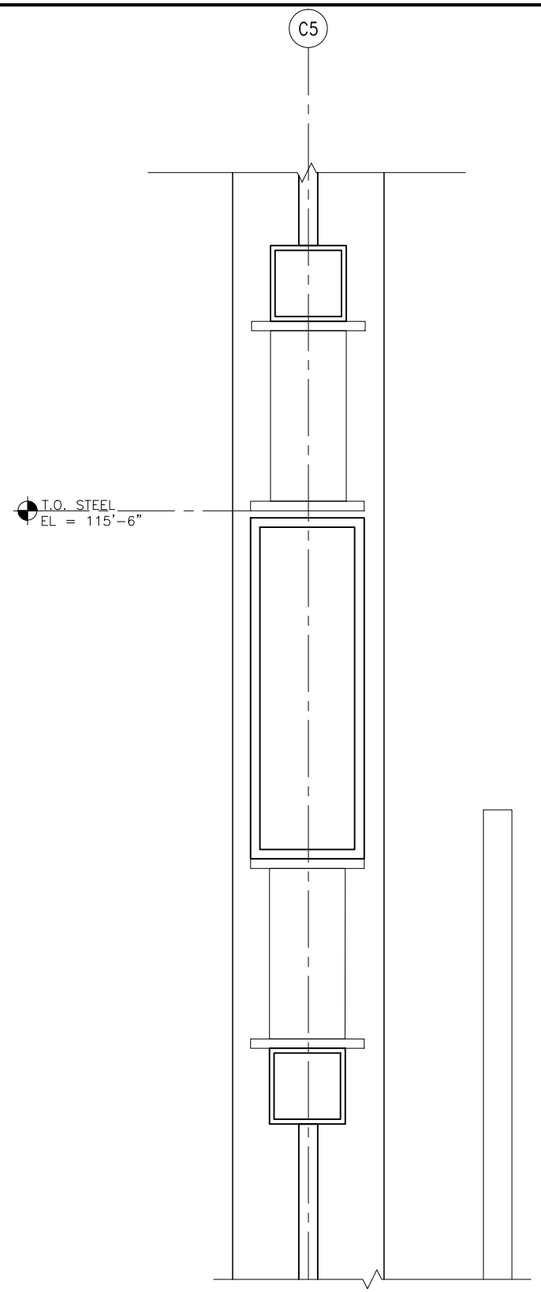

1 VC SECTION DETAILS
SCALE: 1 1/2"=1'-0"

0 2" 4" 8"
SCALE

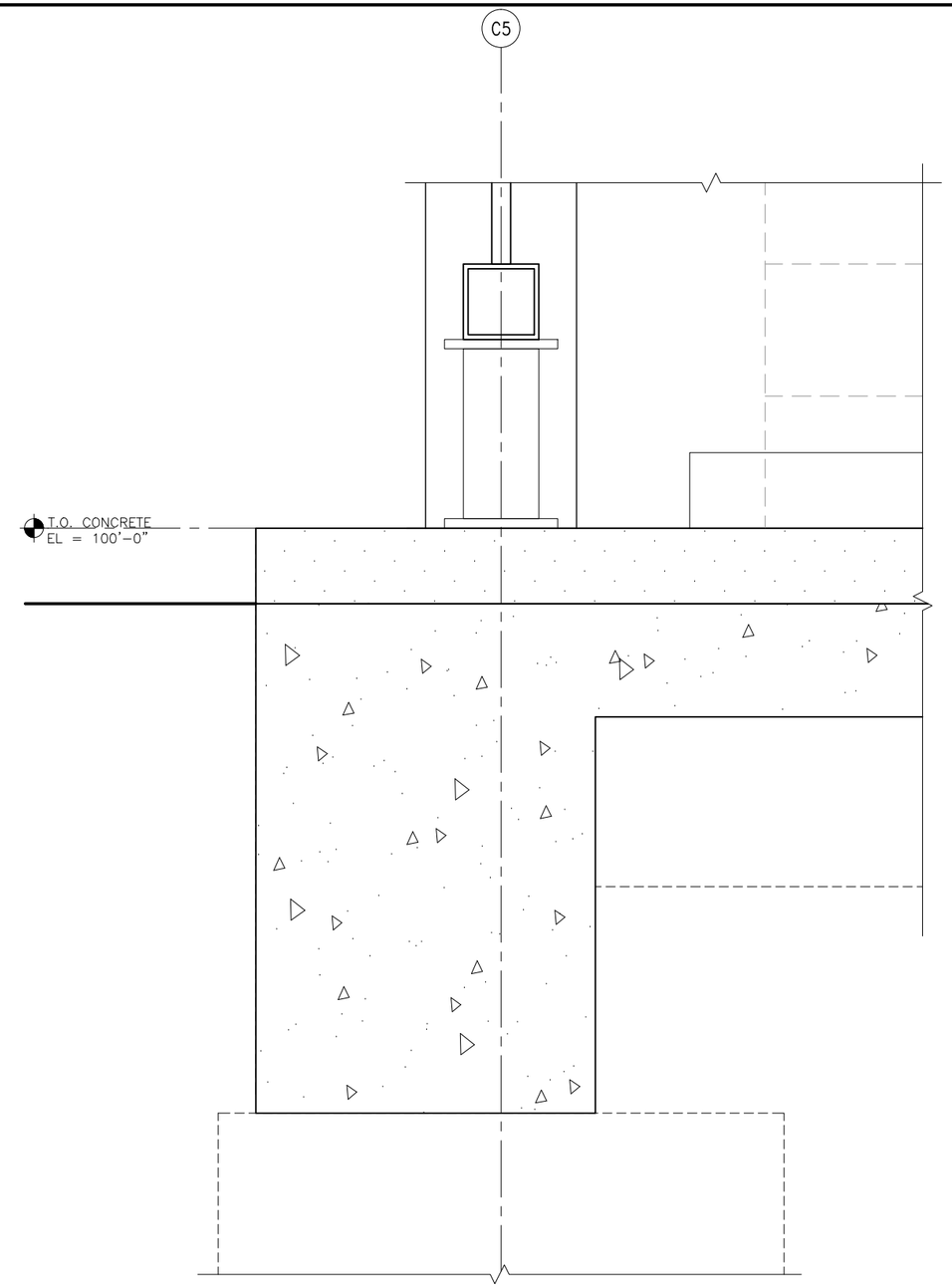

2 VC SECTION DETAILS
SCALE: 1 1/2"=1'-0"

0 2" 4" 8"
SCALE

NO.	DATE	BY	CHECK	DESIGN	REVISION / SUBMITTAL
.	.	.	.	.	.

AECOM

90% SUBMISSION - 01/22/16

METROPOLITAN COUNCIL

SOUTHWEST Green Line LRT Extension

CIVIL - VOLUME 11E
STATIONS COMMON DETAILS
VC SECTION DETAILS

DISCIPLINE: ARCHITECTURE

SHEET NAME: D0-ARC-DTL-540

SHEET 45 OF 111

Jan, 18 2016 11:39 am V:\3400_ADC\CAD\OVERALL\plan sheets\architecture\D0-ARC-DTL-540.dwg By: v-mccarrtp

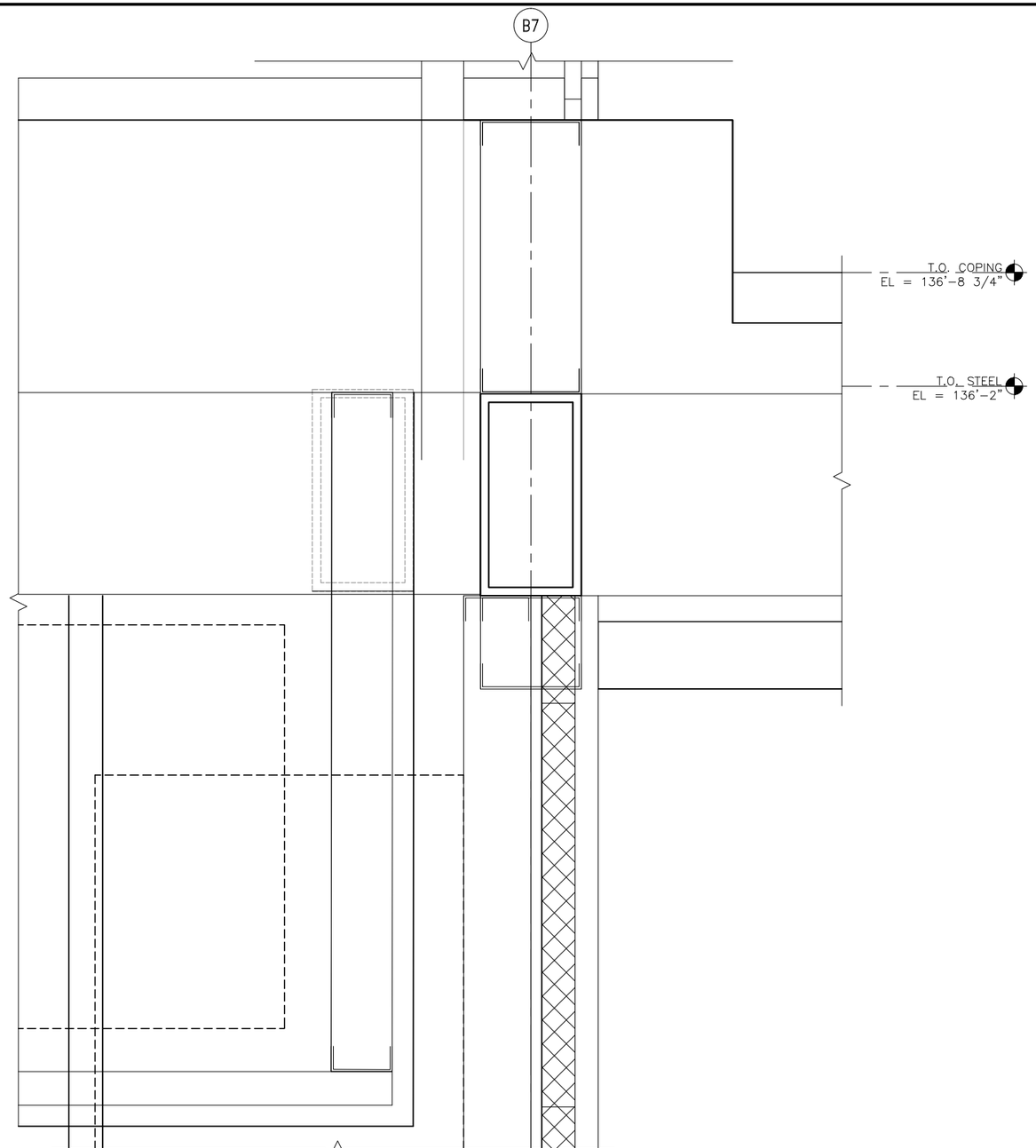

1 VC SECTION DETAILS
SCALE: 1 1/2"=1'-0"

0 2" 4" 8"
SCALE

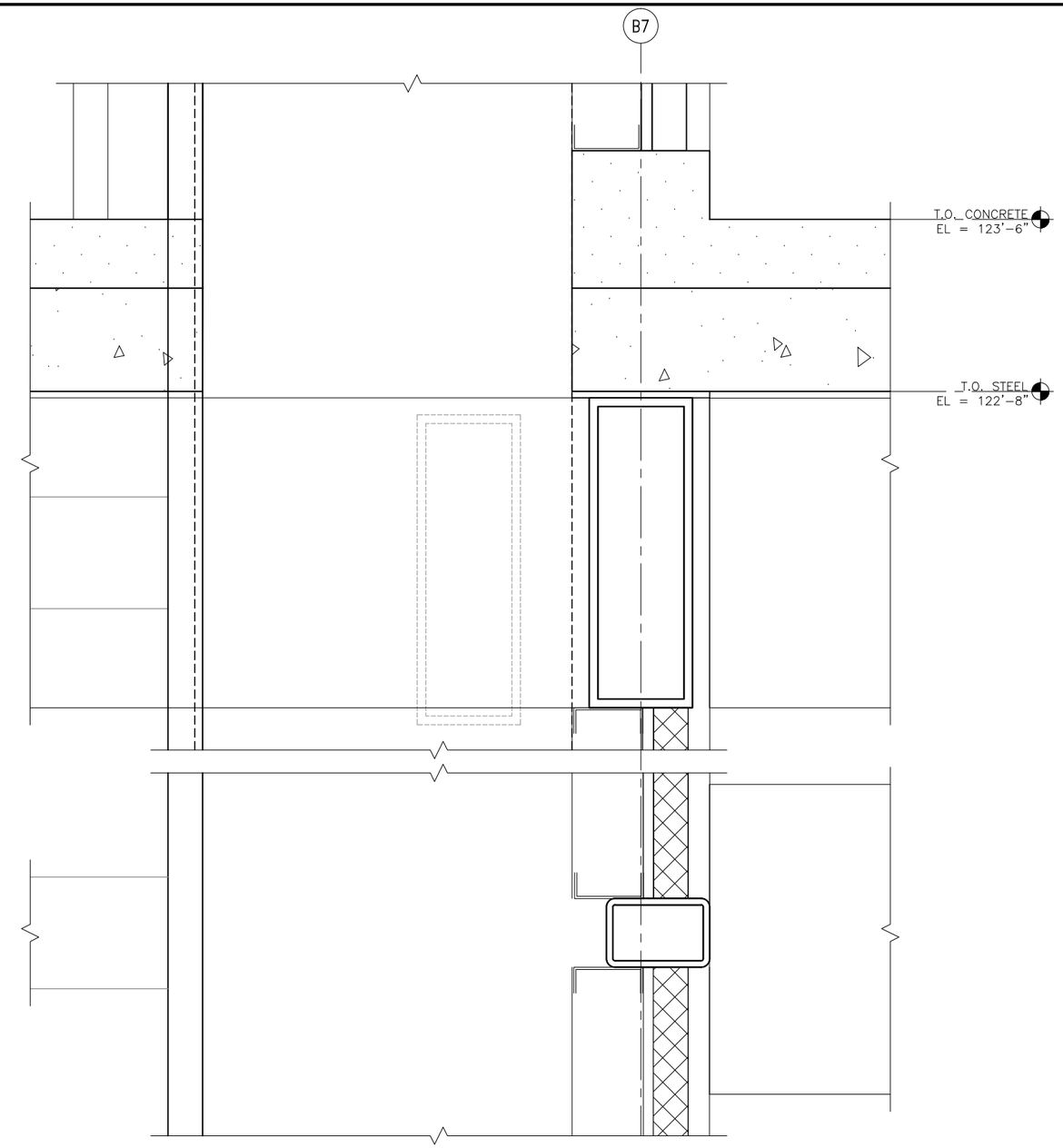

2 VC SECTION DETAILS
SCALE: 1 1/2"=1'-0"

0 2" 4" 8"
SCALE

NO.	DATE	BY	CHECK	DESIGN	REVISION / SUBMITTAL
.	.	.	.	.	.

AECOM

90% SUBMISSION - 01/22/16

METROPOLITAN COUNCIL

SOUTHWEST Green Line LRT Extension

CIVIL - VOLUME 11E
STATIONS COMMON DETAILS
VC SECTION DETAILS

DISCIPLINE: ARCHITECTURE

SHEET NAME: D0-ARC-DTL-541

SHEET 46 OF 111

Jan, 18 2016 11:39 am V:\3400_ADC\CAD\OVERALL\plan sheets\architecture\D0-ARC-DTL-541.dwg By: v-mccarrtp

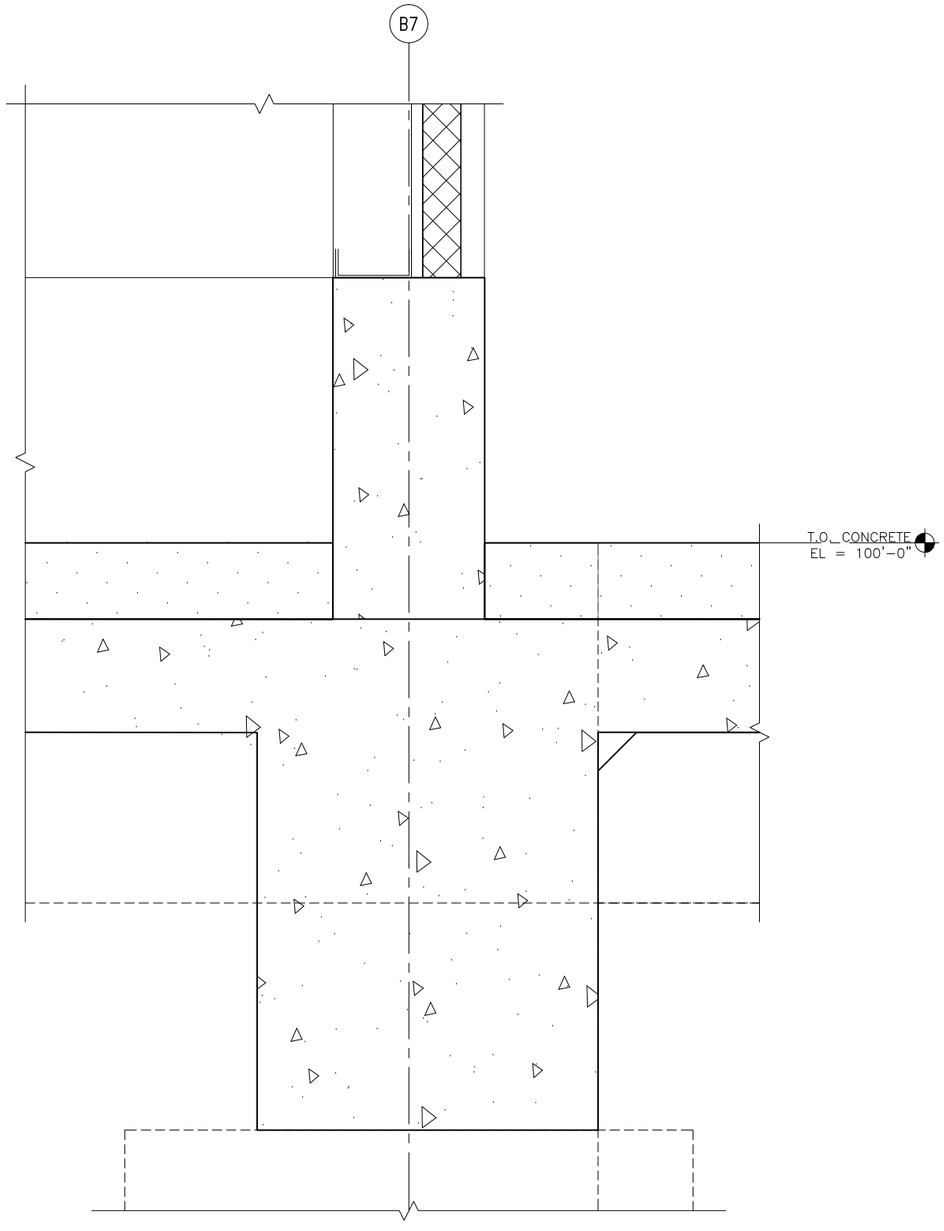

1 VC SECTION DETAILS
SCALE: 1 1/2"=1'-0"

0 2" 4" 8"
SCALE

NO.	DATE	BY	CHECK	DESIGN	REVISION / SUBMITTAL
-	-	-	-	-	-

AECOM

90% SUBMISSION - 01/22/16

METROPOLITAN COUNCIL

SOUTHWEST Green Line LRT Extension

CIVIL - VOLUME 11E
STATIONS COMMON DETAILS
VC SECTION DETAILS

DISCIPLINE: ARCHITECTURE

SHEET NAME: D0-ARC-DTL-542

SHEET 47 OF 111

Jan, 18 2016 11:39 am V:\3400_ADC\CAD\OVERALL\plan sheets\architecture\D0-ARC-DTL-542.dwg By: v-mccartp

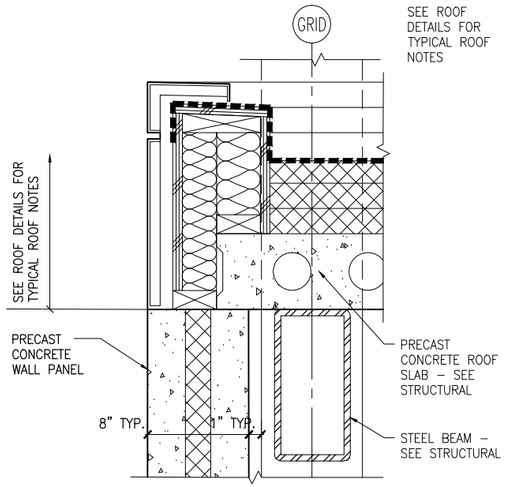

1 PRECAST ROOF
SCALE: 1"=1'-0"
0 3" 6" 1'
SCALE

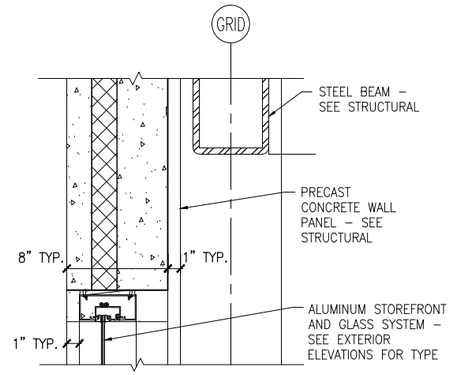

2 PRECAST WINDOW HEAD, JAMB SIM.
SCALE: 1"=1'-0"
0 3" 6" 1'
SCALE

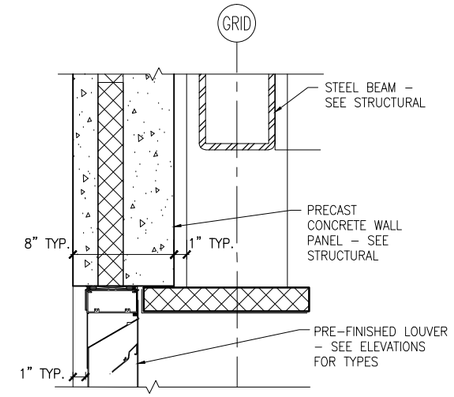

3 PRECAST LOUVER HEAD
SCALE: 1"=1'-0"
0 3" 6" 1'
SCALE

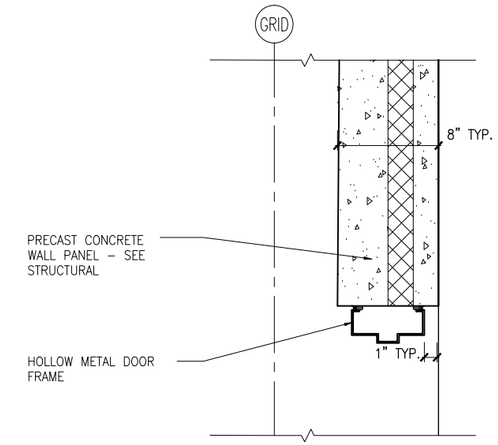

4 PRECAST DOOR JAMB
SCALE: 1"=1'-0"
0 3" 6" 1'
SCALE

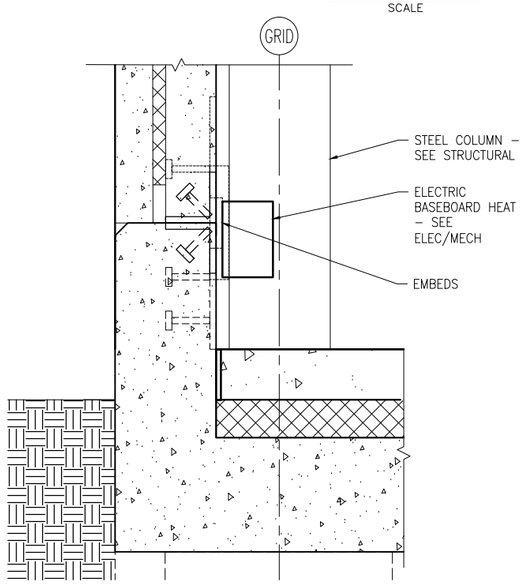

5 PRECAST BASE
SCALE: 1"=1'-0"
0 3" 6" 1'
SCALE

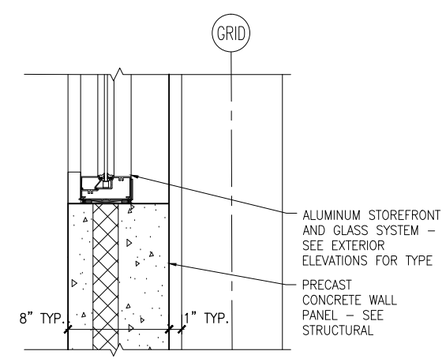

6 PRECAST WINDOW SILL
SCALE: 1"=1'-0"
0 3" 6" 1'
SCALE

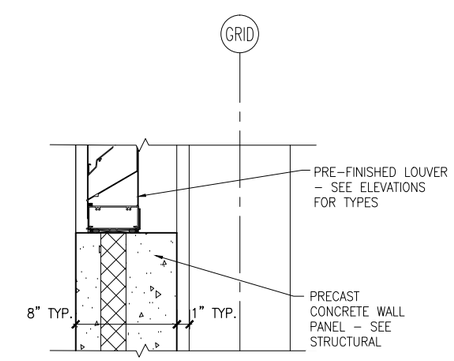

7 PRECAST LOUVER SILL
SCALE: 1"=1'-0"
0 3" 6" 1'
SCALE

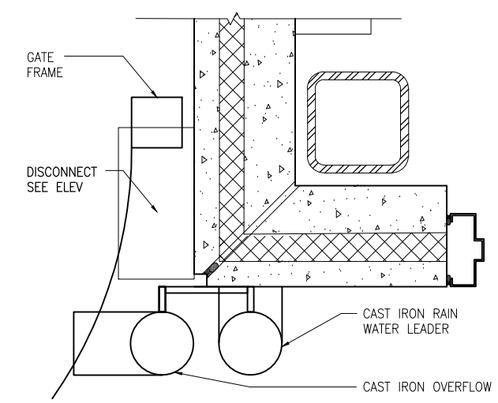

8 PRECAST CORNER
SCALE: 1"=1'-0"
0 3" 6" 1'
SCALE

NO.	DATE	BY	CHECK	DESIGN	REVISION / SUBMITTAL

AECOM

90% SUBMISSION - 01/22/16

METROPOLITAN COUNCIL

SOUTHWEST Green Line LRT Extension

CIVIL - VOLUME 11E
STATIONS COMMON DETAILS
PRECAST WALL DETAILS

DISCIPLINE: ARCHITECTURE

SHEET NAME: D0-ARC-DTL-543

SHEET 48 OF 111

Jan, 19 2016 08:32 pm V:\3400_ADC\CAD\OVERALL\PLAN SHEETS\ARCHITECTURE\D0-ARC-DTL-543.dwg By: Ebsenjr

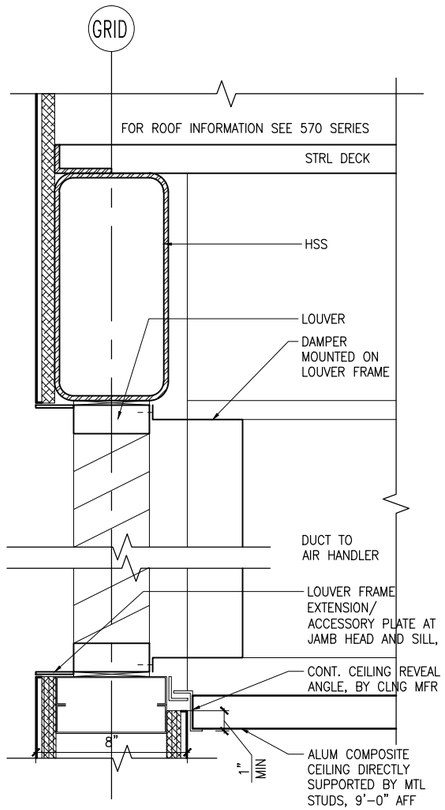

1 ELEVATOR LOBBY CLNG VENT
SCALE: 3"=1'-0"

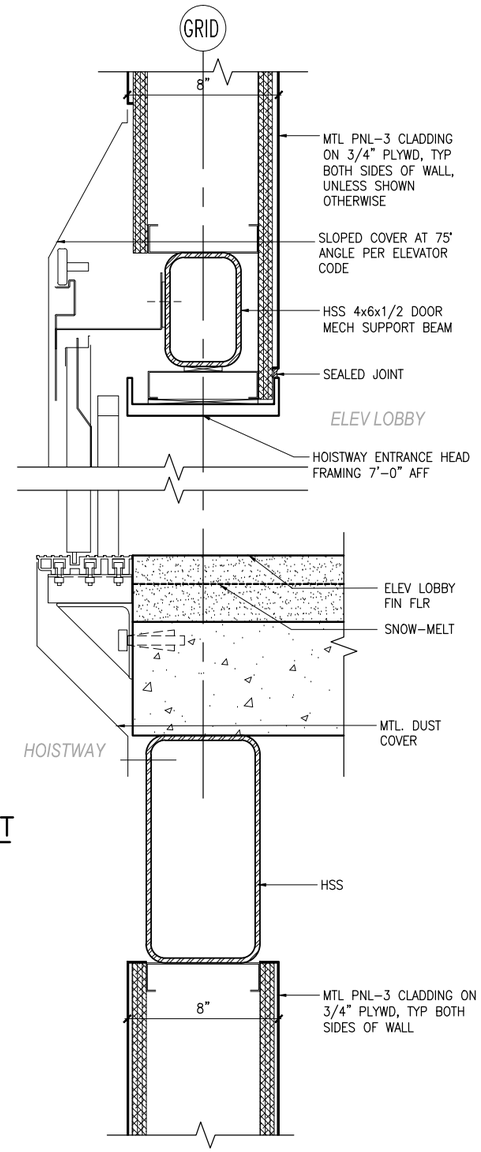

2 ELEVATOR ENTRANCE HEAD/SILL
SCALE: 3"=1'-0"

NO.	DATE	BY	CHECK	DESIGN	REVISION / SUBMITTAL

AECOM

90% SUBMISSION - 01/22/16

METROPOLITAN COUNCIL

SOUTHWEST Green Line LRT Extension

CIVIL - VOLUME 11E
STATIONS COMMON DETAILS
VC LOBBY WALL DETAILS

DISCIPLINE: ARCHITECTURE

SHEET NAME: D0-ARC-DTL-550

SHEET 49 OF 111

Jan, 19 2016 08:32 pm V:\3400_ADC\CAD\OVERALL\PLAN SHEETS\ARCHITECTURE\D0-ARC-DTL-550.dwg By: Ebsenjr

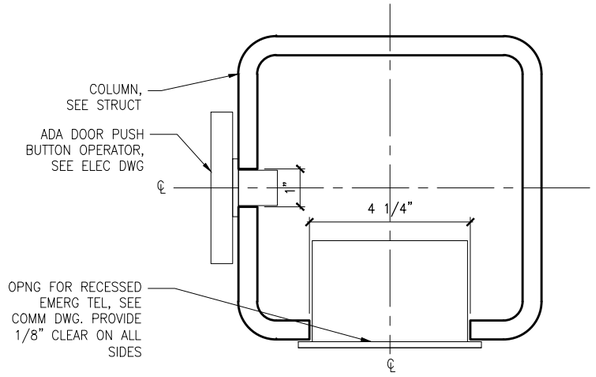

2 EMER TEL & ADA DR OPERATOR
SCALE: 3"=1'-0"

0 1" 2" 4"
SCALE

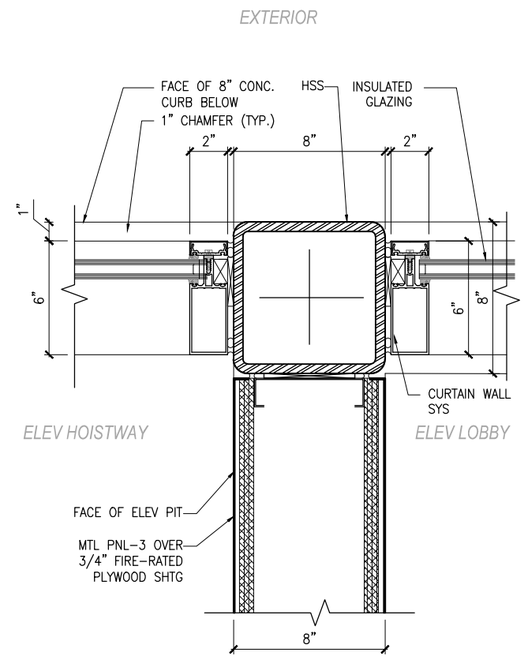

5 TBD
SCALE: 3"=1'-0"

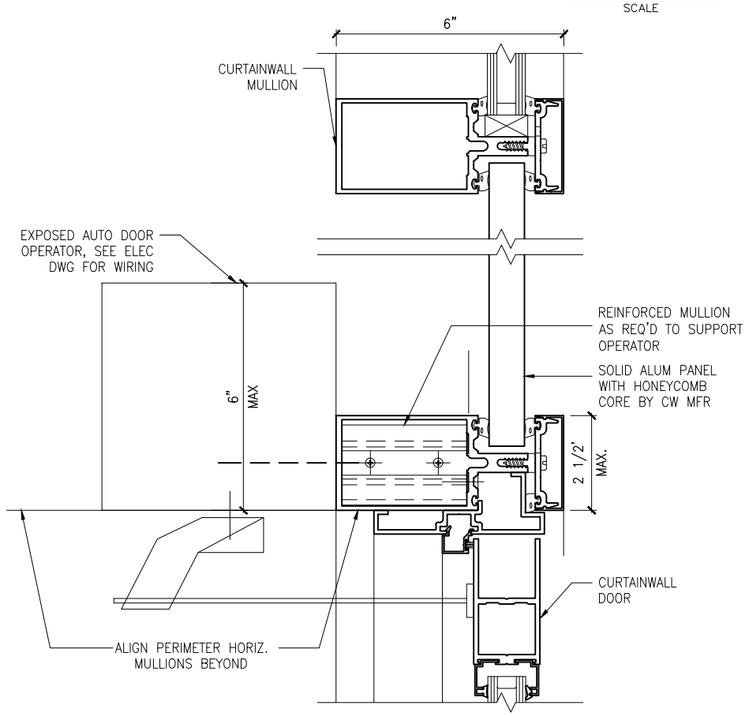

1 ADA DOOR OPERATOR
SCALE: 3"=1'-0"

0 1" 2" 4"
SCALE

3 EVTR HOISTWAY WALL DETAIL
SCALE: 3"=1'-0"

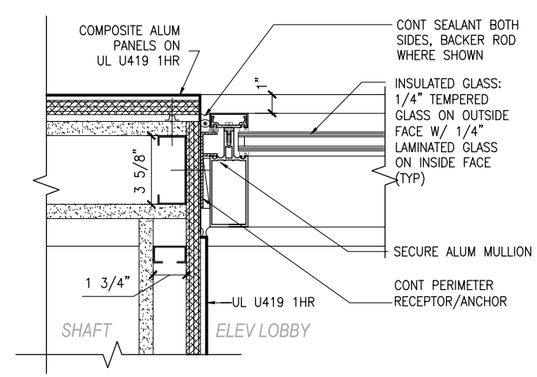

4 EVTR LOBBY SHAFT WALL DETAIL
SCALE: 3"=1'-0"

6 TBD
SCALE: 3"=1'-0"

NO.	DATE	BY	CHECK	DESIGN	REVISION / SUBMITTAL

AECOM

90% SUBMISSION - 01/22/16

METROPOLITAN COUNCIL

SOUTHWEST Green Line LRT Extension

CIVIL - VOLUME 11E
STATIONS COMMON DETAILS
VC LOBBY / HOISTWAY WALL DETAILS

DISCIPLINE: ARCHITECTURE

SHEET NAME: D0-ARC-DTL-551

SHEET 50 OF 111

Jan, 18 2016 11:41 am V:\3400_ADC\CAD\OVERALL\plan sheets\architecture\D0-ARC-DTL-551.dwg By: v-mccarrtp

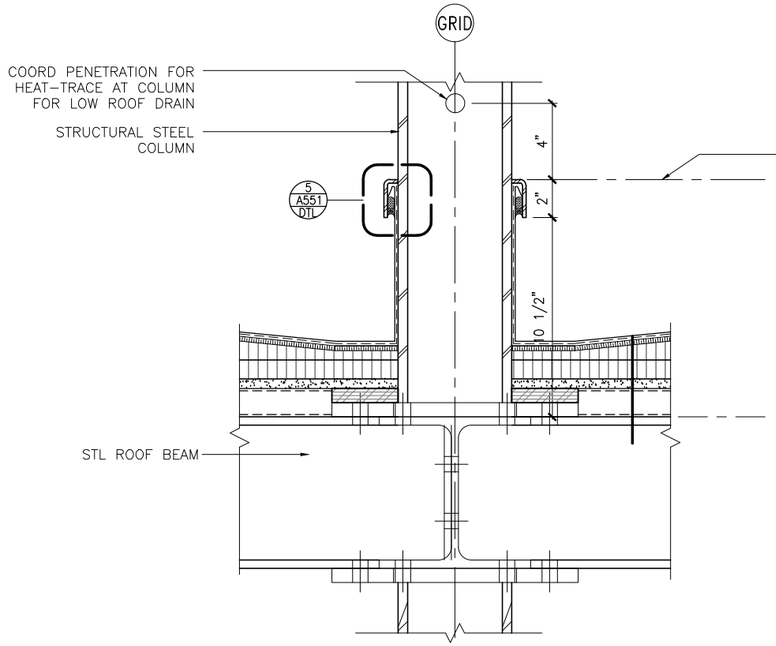

1 ROOF FLASHING AT COLUMN
SCALE: 1 1/2"=1'-0"
0 2" 4" 8" SCALE

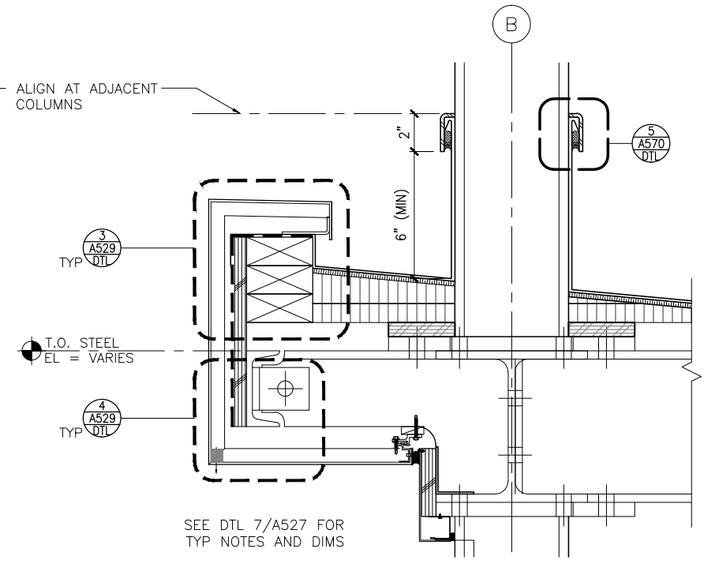

2 ROOF FLASHING AT COLUMN
SCALE: 1 1/2"=1'-0"
0 2" 4" 8" SCALE

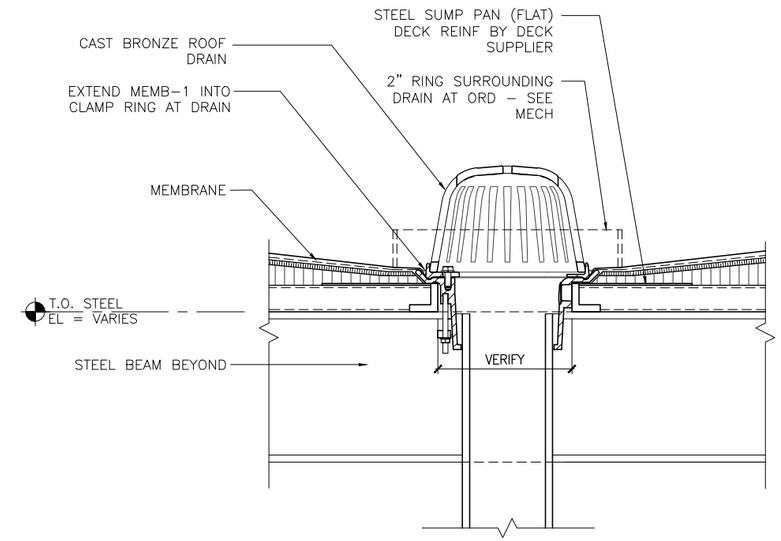

3 ROOF DRAIN DETAIL
SCALE: 1 1/2"=1'-0"
0 2" 4" 8" SCALE

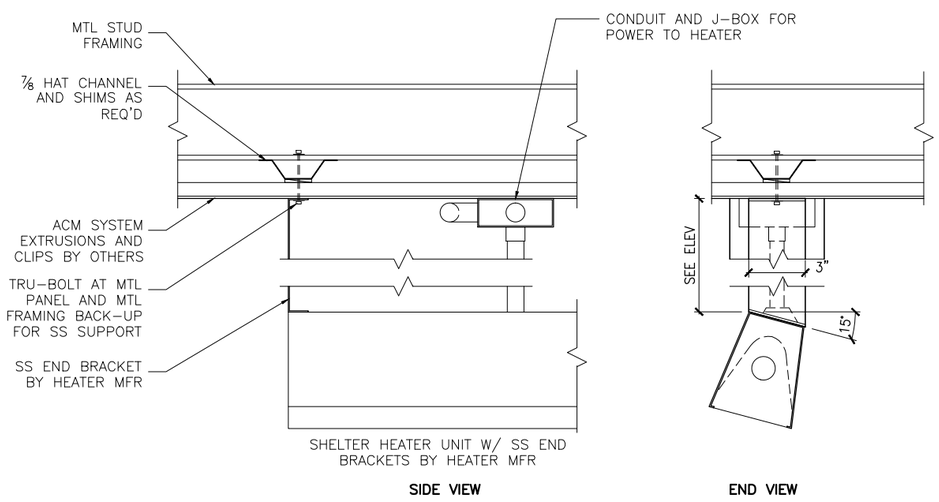

4 ROOF SECTION AT HEATER
SCALE: 1 1/2"=1'-0"
0 2" 4" 8" SCALE

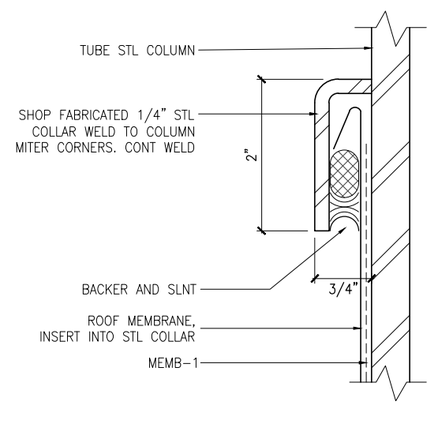

5 DETAIL AT COLUMN FLASHING
SCALE:6"=1'-0"
0 1/2" 1" 2" SCALE

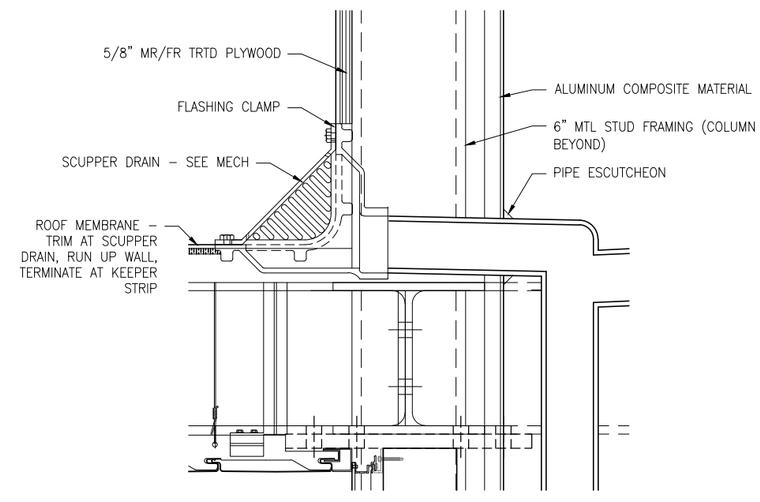

6 SECTION DETAIL AT SCUPPER DRAIN
SCALE: 1 1/2"=1'-0"

NO.	DATE	BY	CHECK	DESIGN	REVISION / SUBMITTAL
.	.	.	.	.	.

AECOM

90% SUBMISSION - 01/22/16

METROPOLITAN COUNCIL

SOUTHWEST Green Line LRT Extension

CIVIL - VOLUME 11E
STATIONS COMMON DETAILS
ROOF DETAILS

DISCIPLINE: ARCHITECTURE

SHEET NAME: D0-ARC-DTL-570

SHEET 51 OF 111

Jan, 18 2016 11:41 am V:\3400_ADC\CAD\OVERALL\plan sheets\architecture\D0-ARC-DTL-570.dwg By: v-mccartp

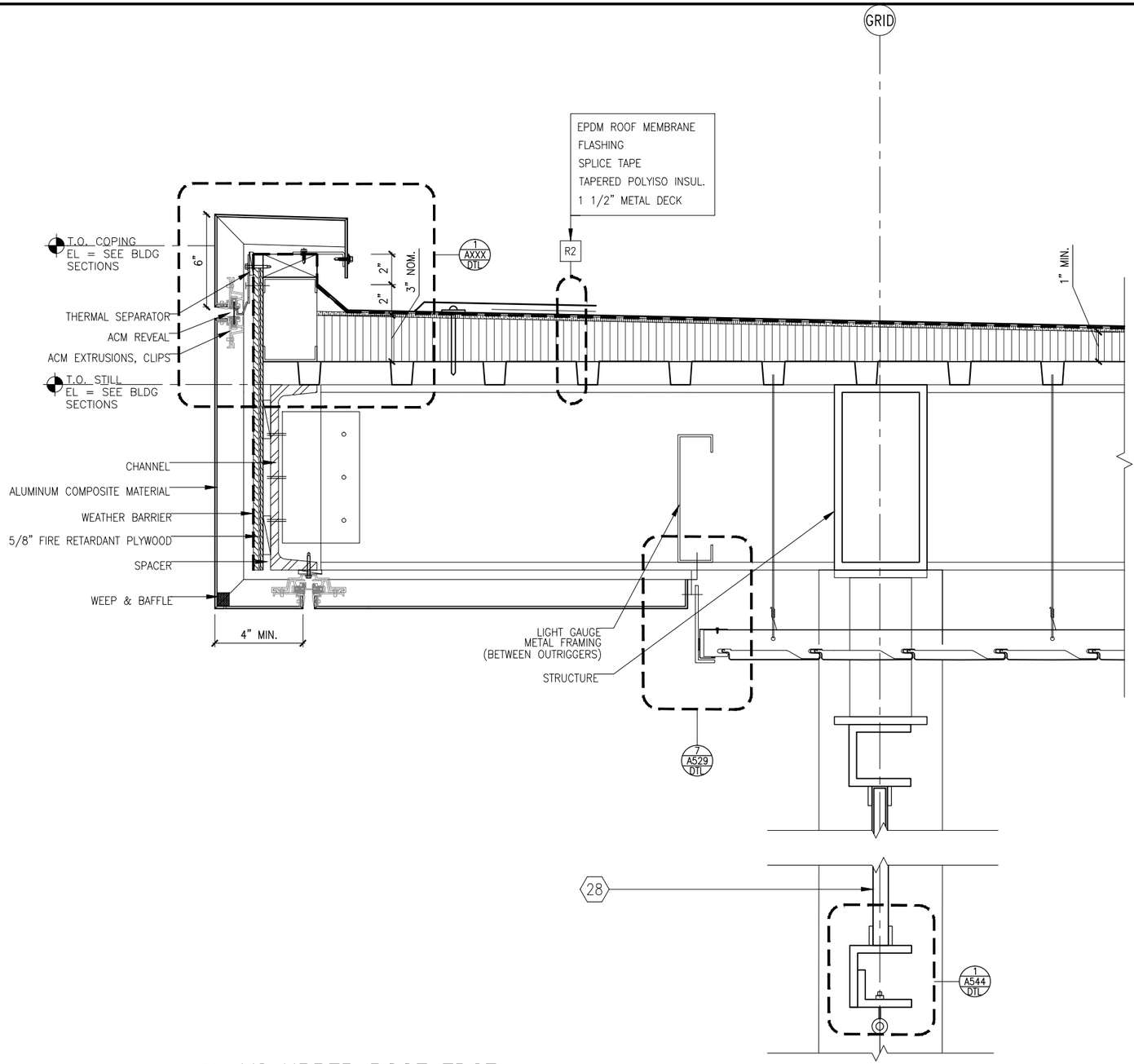

1 VC UPPER ROOF EDGE
SCALE: 1 1/2"=1'-0"

0 2" 4" 8"
SCALE

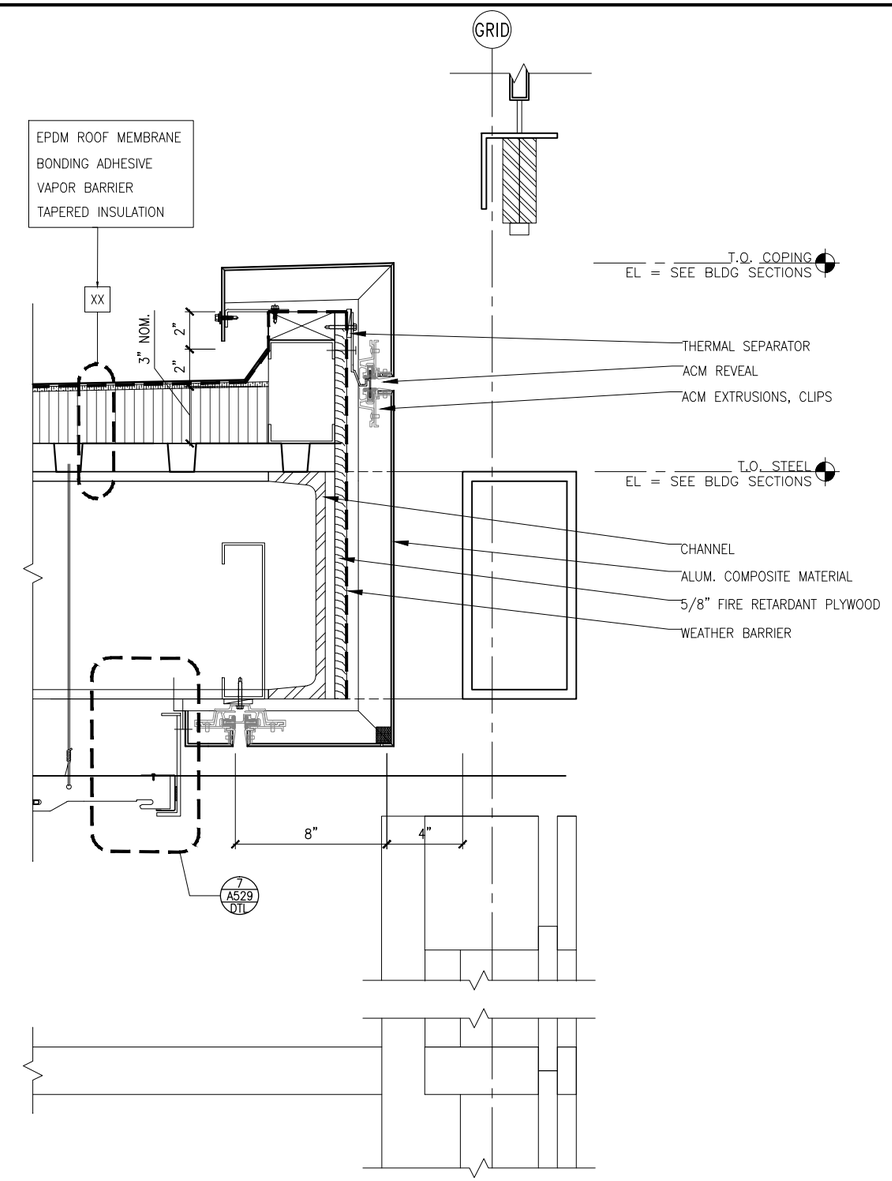

2 VC LOWER ROOF EDGE
SCALE: 1 1/2"=1'-0"

0 2" 4" 8"

NO.	DATE	BY	CHECK	DESIGN	REVISION / SUBMITTAL
.	.	.	.	.	.

AECOM

90% SUBMISSION - 01/22/16

METROPOLITAN COUNCIL

SOUTHWEST Green Line LRT Extension

CIVIL - VOLUME 11E
STATIONS COMMON DETAILS
ROOF DETAILS

DISCIPLINE: ARCHITECTURE

SHEET NAME: D0-ARC-DTL-572

SHEET 52 OF 111

Jan, 19 2016 08:32 pm V:\3400_ADC\CAD\OVERALL\PLAN SHEETS\ARCHITECTURE\D0-ARC-DTL-572.dwg By: Ebsenjr

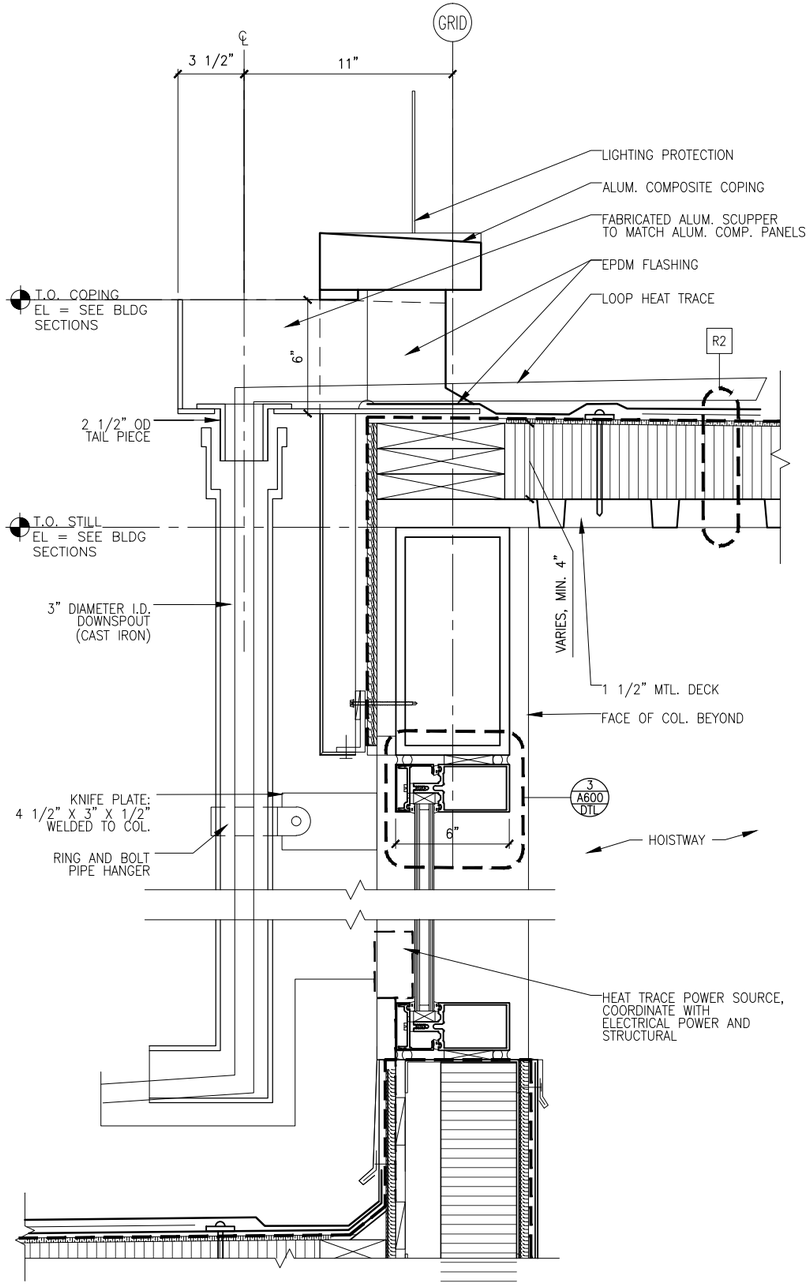

1 SCUPPER
SCALE: 1 1/2"=1'-0"

0 2" 4" 8"
SCALE

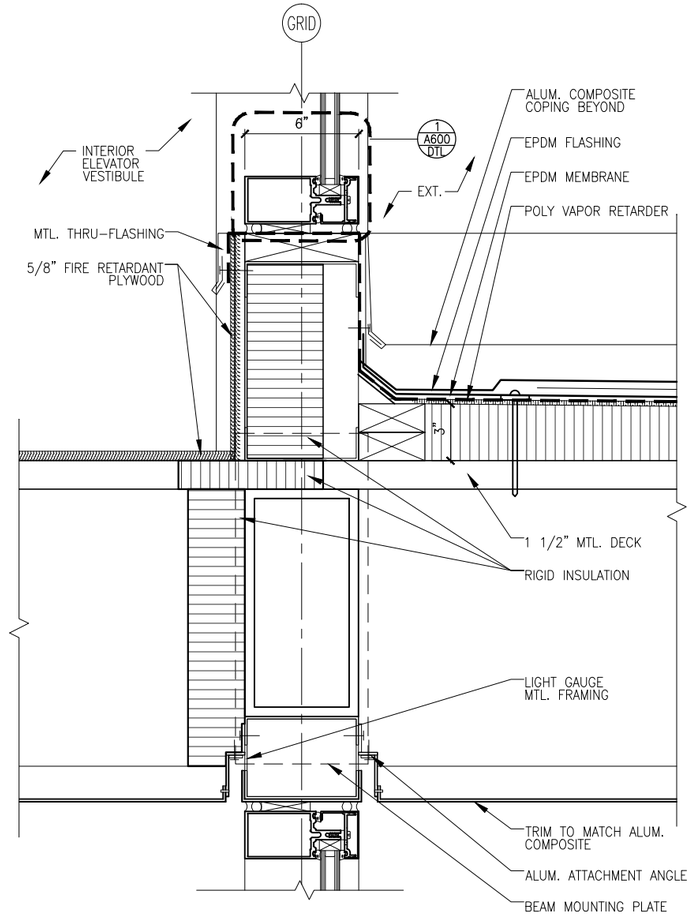

2 ELEVATOR VESTIBULE CANOPY
SCALE: 1 1/2"=1'-0"

0 2" 4" 8"
SCALE

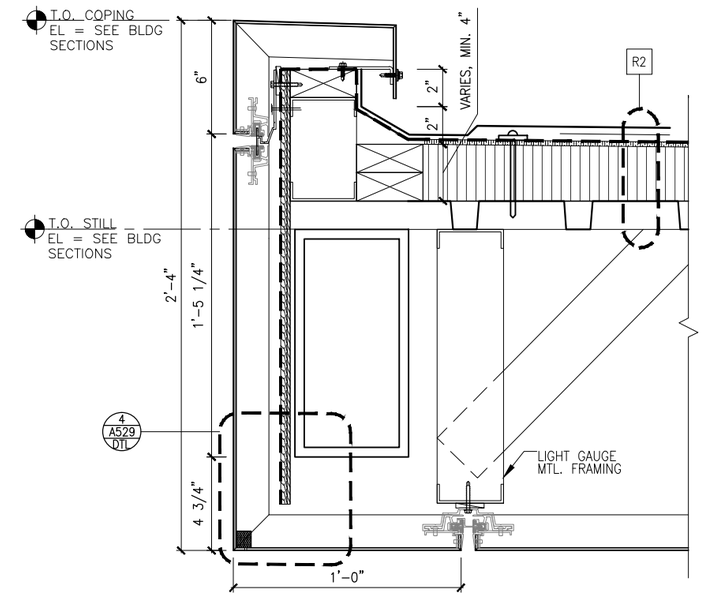

3 CANOPY AT ELEVATOR VESTIBULE
SCALE: 1 1/2"=1'-0"

0 2" 4" 8"
SCALE

NO.	DATE	BY	CHECK	DESIGN	REVISION / SUBMITTAL
.	.	.	.	.	.

AECOM

90% SUBMISSION - 01/22/16

METROPOLITAN COUNCIL

SOUTHWEST Green Line LRT Extension

CIVIL - VOLUME 11E
STATIONS COMMON DETAILS
ROOF DETAILS

DISCIPLINE: ARCHITECTURE

SHEET NAME: D0-ARC-DTL-573

SHEET 53 OF 111

Jan, 19 2016 08:32 pm V:\3400_ADC\CAD\OVERALL\PLAN SHEETS\ARCHITECTURE\D0-ARC-DTL-573.dwg By: Ebsenjr

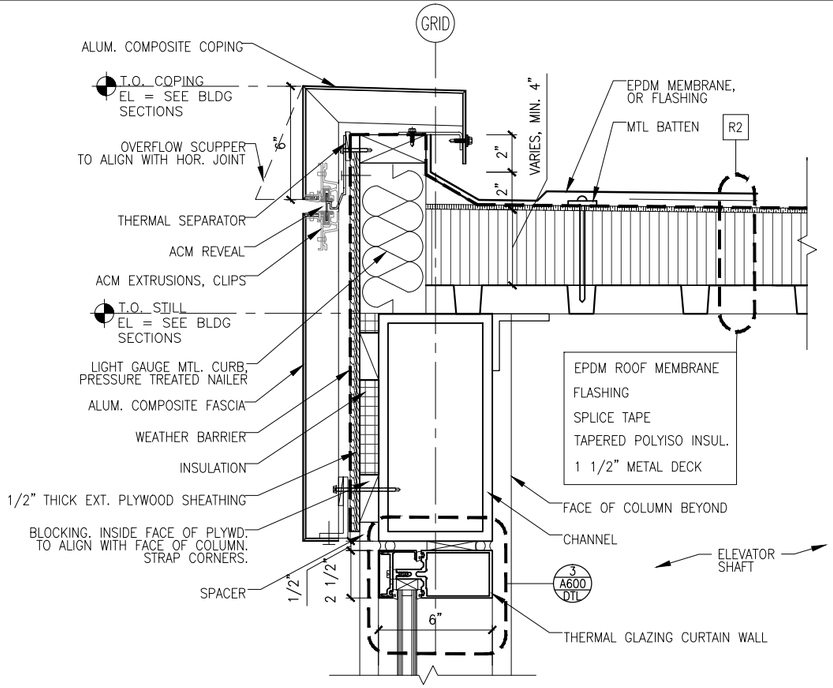

1 TYP. ELEVATOR SHAFT ROOF EDGE

SCALE: 1 1/2"=1'-0"

0 2" 4" 8"
SCALE

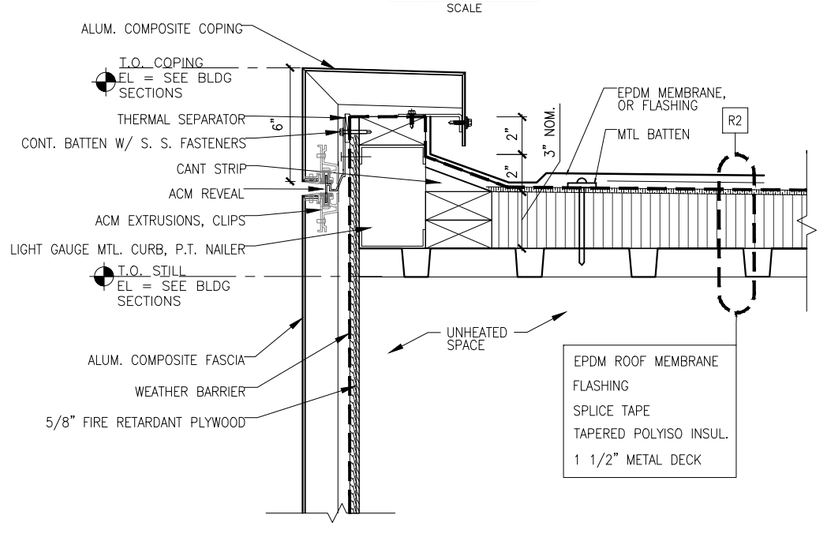

2 TYP. ROOF EDGE OVER NON-HEATED OR COOLED SPACES

SCALE: 1 1/2"=1'-0"

0 2" 4" 8"
SCALE

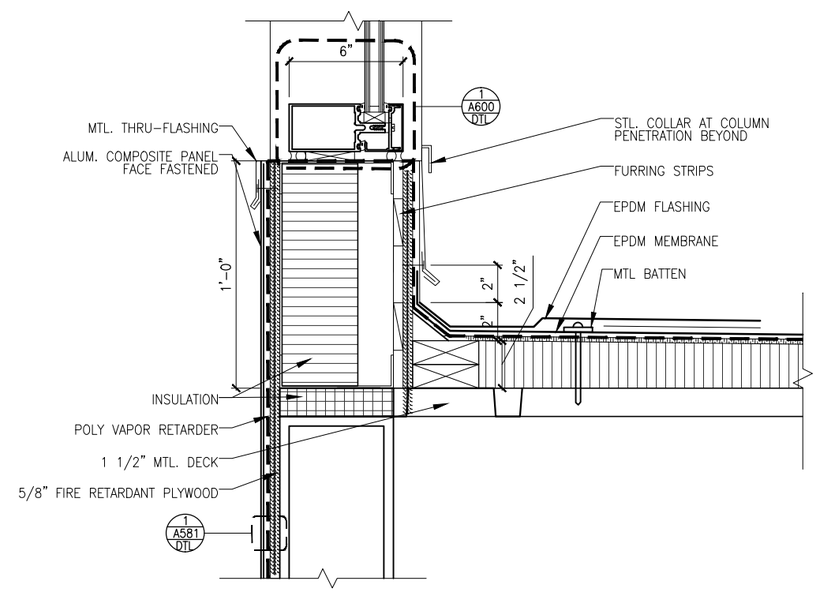

3 TYP. ELEVATOR SHAFT ROOF EDGES

SCALE: 1 1/2"=1'-0"

0 2" 4" 8"
SCALE

NO.	DATE	BY	CHECK	DESIGN	REVISION / SUBMITTAL
.	.	.	.	.	.

AECOM

90% SUBMISSION - 01/22/16

METROPOLITAN COUNCIL

SOUTHWEST Green Line LRT Extension

CIVIL - VOLUME 11E
STATIONS COMMON DETAILS
ROOF DETAILS

DISCIPLINE: ARCHITECTURE

SHEET NAME: D0-ARC-DTL-574

SHEET 54 OF 111

Jan, 19 2016 08:33 pm V:\3400_ADC\CAD\OVERALL\PLAN SHEETS\ARCHITECTURE\D0-ARC-DTL-574.dwg By: Ebsenjr

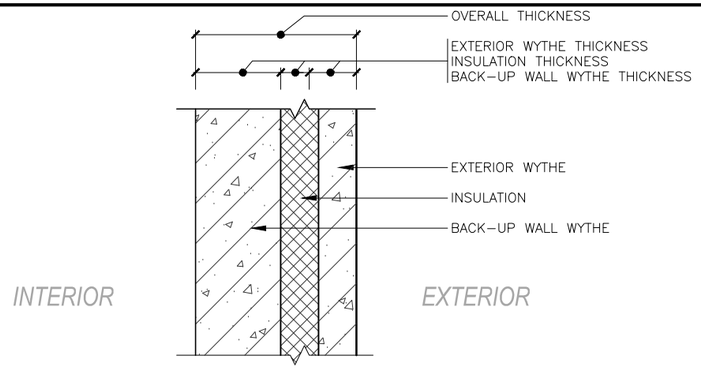

WALL TYPE	OVERALL THICK	FACING MATERIAL		EXTERIOR WYTHE		INSULATION			BACK UP WALL	
		TYPE	THICK	TYPE	THICK	TYPE	THICK	R–VALUE	TYPE	THICK
AA2	8"	–	–	PRCST	2"	INSUL–1	2"	R–11	PRCST	4"

NOTES:
1 REFER TO FINISH SCHEDULE TA A010 FOR MATERIAL FINISH AND COLOR

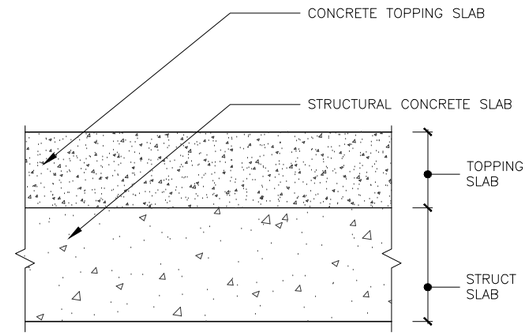

NOTES:
1 TOPPING SLAB THICKNESS VARIES
SEE ELEVATIONS FOR T.O. FLOOR ELEVATION

AA ARCHITECTURAL PRECAST CONCRETE STRUCTURAL SANDWICH PANEL

SCALE: 1 1/2"=1'–0" 0 2" 4" 8" SCALE

CP1 CONCRETE PLATFORM STRUCTURE

SCALE: 1 1/2"=1'–0" 0 2" 4" 8" SCALE

– NOT USED

SCALE: 1 1/2"=1'–0" 0 2" 4" 8" SCALE

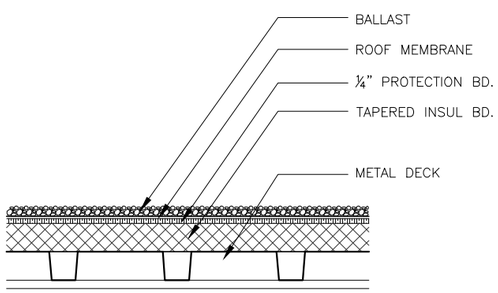

R1 BALASTED MEMBRANE ROOF

SCALE: 1 1/2"=1'–0" 0 2" 4" 8" SCALE

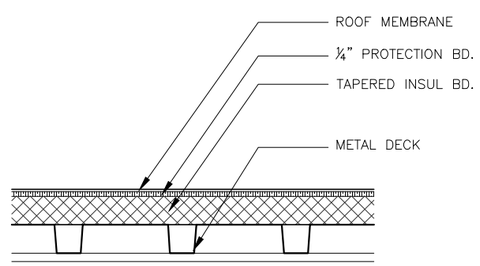

R2 MEMBRANE ROOF

SCALE: 1 1/2"=1'–0" 0 2" 4" 8" SCALE

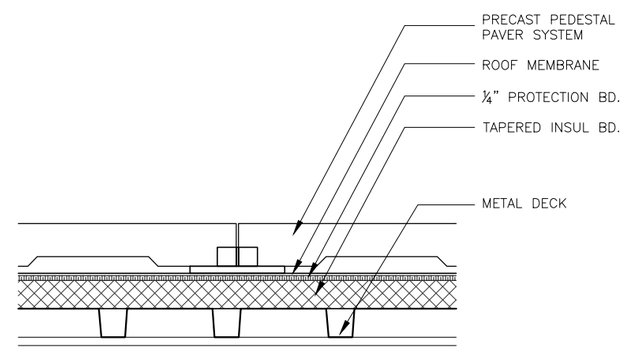

R3 PRECAST PAVER OVER EPDM

SCALE: 1 1/2"=1'–0" 0 2" 4" 8" SCALE

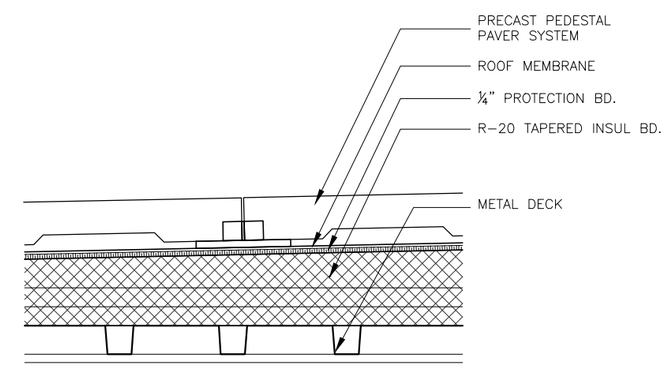

R4 PRECAST PAVER OVER EPDM (R–20 INSUL)

SCALE: 1 1/2"=1'–0" 0 2" 4" 8" SCALE

NO.	DATE	BY	CHECK	DESIGN	REVISION / SUBMITTAL

AECOM

90% SUBMISSION - 01/22/16

METROPOLITAN COUNCIL

SOUTHWEST Green Line LRT Extension

CIVIL - VOLUME 11E
STATIONS COMMON DETAILS
CONSTRUCTION TYPES

DISCIPLINE: ARCHITECTURE

SHEET NAME: D0-ARC-DTL-580

Jan, 18 2016 11:42 am V:\3400_ADC\CAD\OVERALL\plan sheets\architecture\D0-ARC-DTL-580.dwg By: v-mccartip

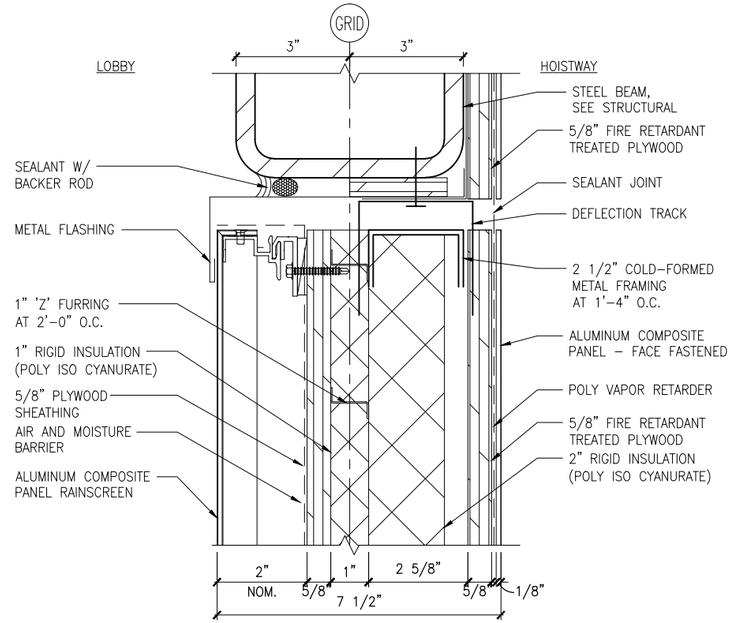

2 HEAD DETAIL

SCALE: 3"=1'-0"

0 1" 2" 4"
SCALE

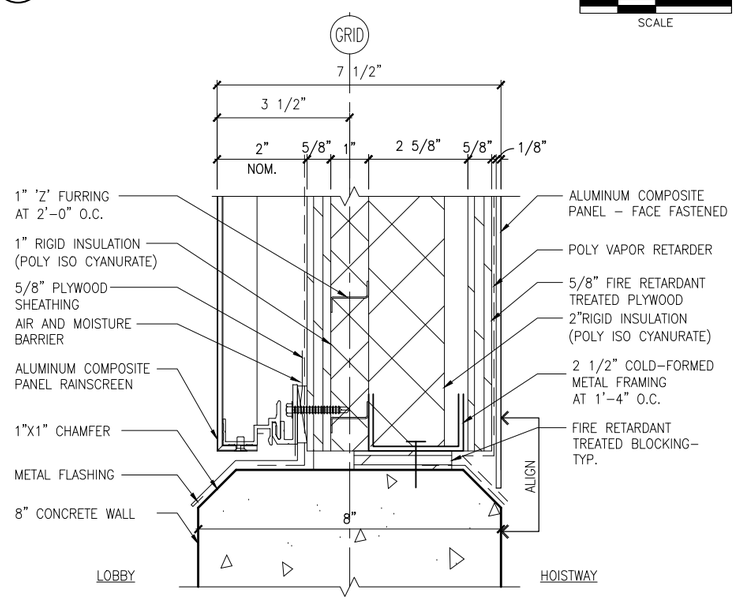

1 SILL DETAIL

SCALE: 3"=1'-0"

0 1" 2" 4"
SCALE

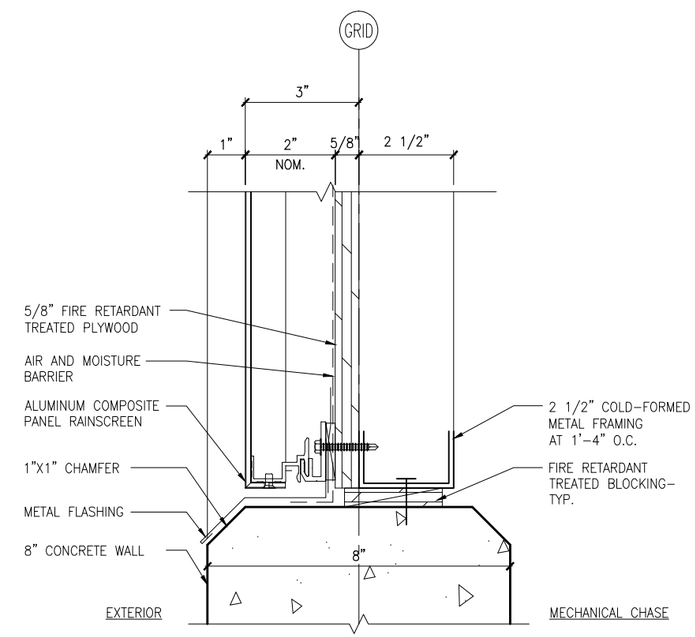

3 SILL DETAIL

SCALE: 3"=1'-0"

0 1" 2" 4"
SCALE

NO.	DATE	BY	CHECK	DESIGN	REVISION / SUBMITTAL

AECOM

90% SUBMISSION - 01/22/16

METROPOLITAN COUNCIL

SOUTHWEST Green Line LRT Extension

CIVIL - VOLUME 11E
STATIONS COMMON DETAILS
CONSTRUCTION TYPES

DISCIPLINE: ARCHITECTURE

SHEET NAME: D0-ARC-DTL-581

SHEET 56 OF 111

Jan. 19 2016 08:33 pm V:\3400_ADC\CAD\OVERALL\PLAN SHEETS\ARCHITECTURE\D0-ARC-DTL-581.dwg By: Ebsenjr

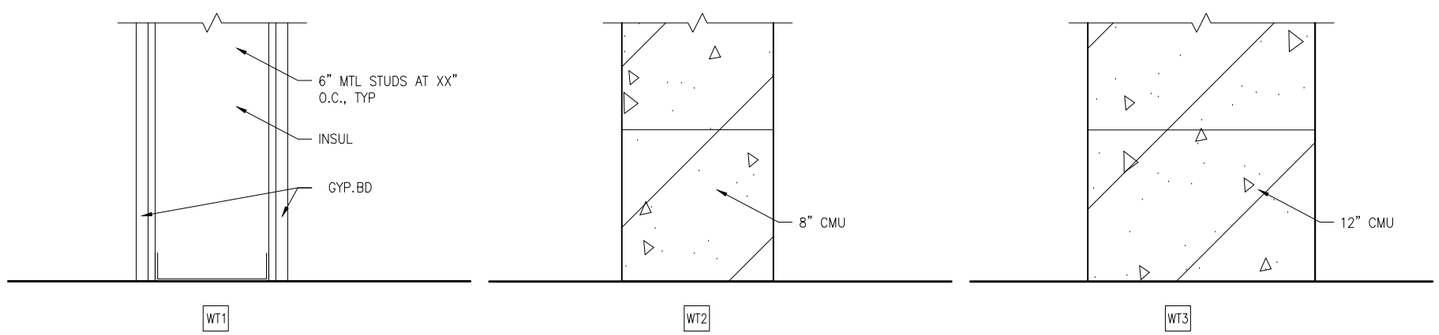

1 WALL TYPES
SCALE: 1 1/2"=1'-0"

0 2" 4" 8"
SCALE

NO.	DATE	BY	CHECK	DESIGN	REVISION / SUBMITTAL

AECOM

90% SUBMISSION - 01/22/16

METROPOLITAN COUNCIL

SOUTHWEST Green Line LRT Extension

CIVIL - VOLUME 11E
STATIONS COMMON DETAILS
WALL TYPES

DISCIPLINE: ARCHITECTURE

SHEET NAME: D0-ARC-DTL-585

SHEET 57 OF 111

Jan, 19 2016 08:33 pm V:\3400_ADC\CAD\OVERALL\PLAN SHEETS\ARCHITECTURE\D0-ARC-DTL-585.dwg By: Ebsenjr

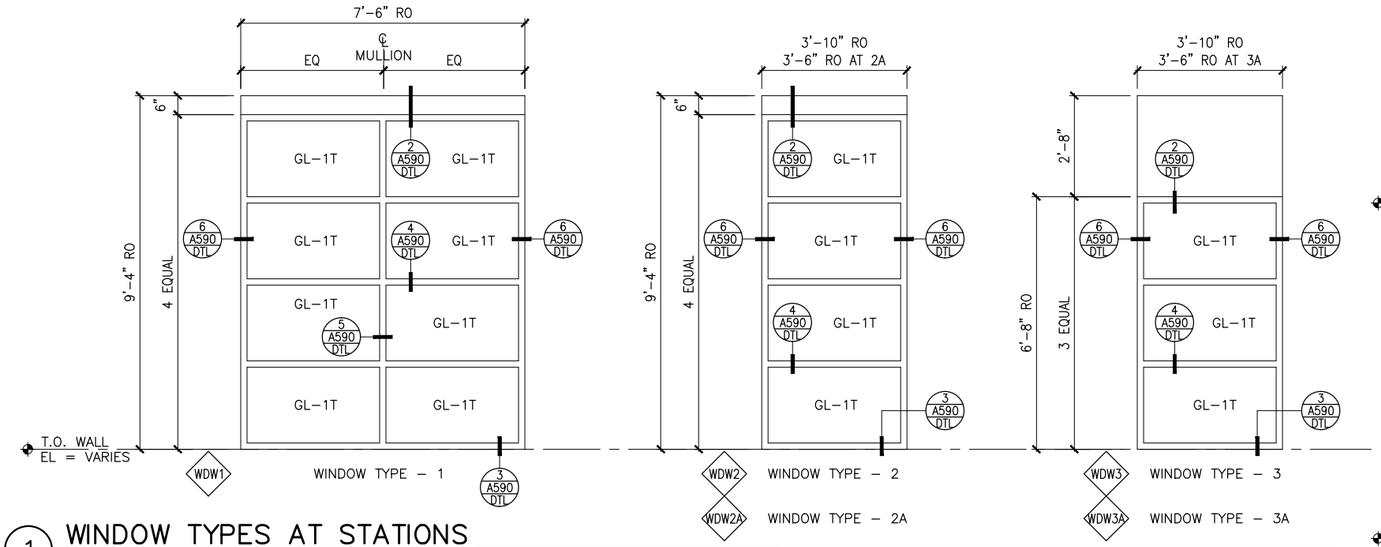

1 WINDOW TYPES AT STATIONS
SCALE: 1/4"=1'-0"

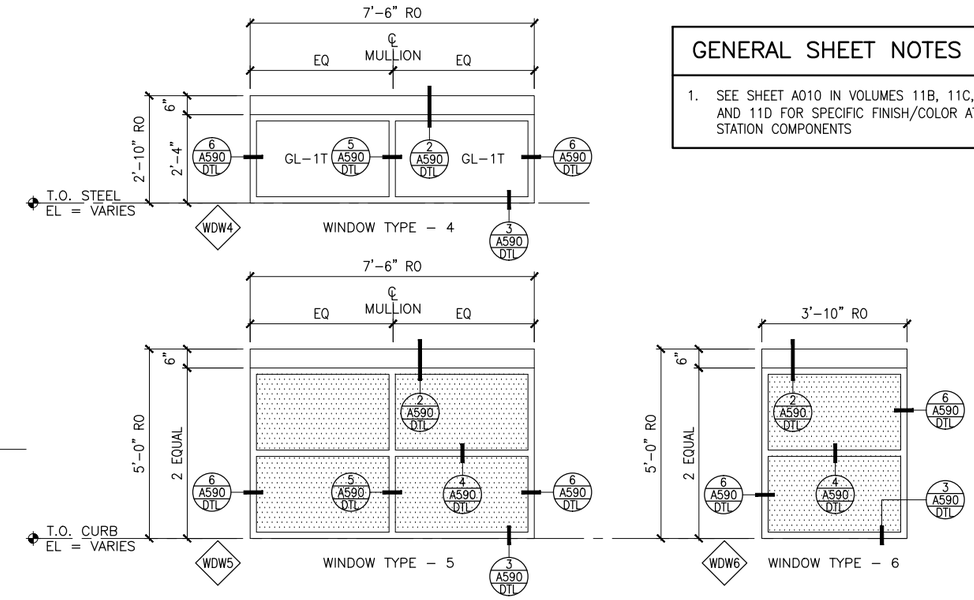

GENERAL SHEET NOTES

1. SEE SHEET A010 IN VOLUMES 11B, 11C, AND 11D FOR SPECIFIC FINISH/COLOR AT STATION COMPONENTS

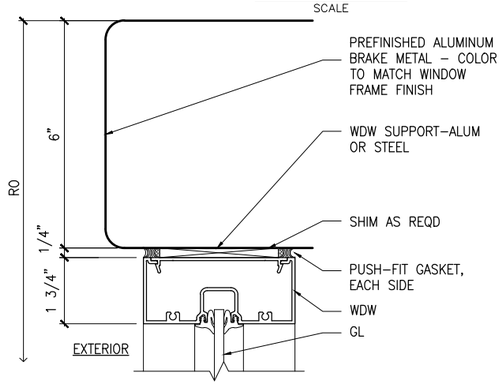

2 TYP HEAD AT WINDOW
SCALE: 3" = 1'-0"

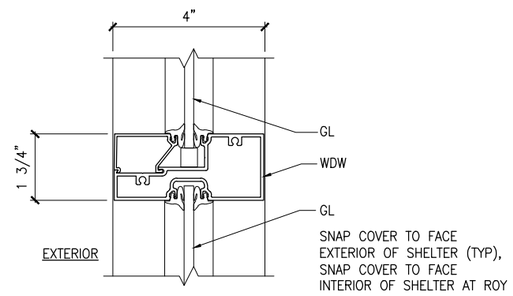

4 TYP HORIZONTAL AT WINDOW
SCALE: 3" = 1'-0"

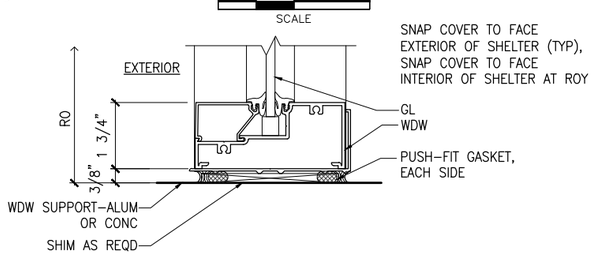

3 TYP SILL AT WINDOW
SCALE: 3" = 1'-0"

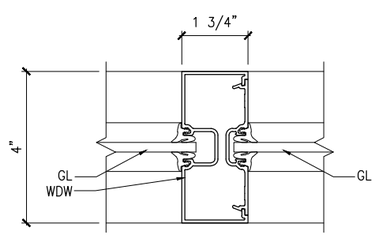

5 TYP VERTICAL AT WINDOW
SCALE: 3" = 1'-0"

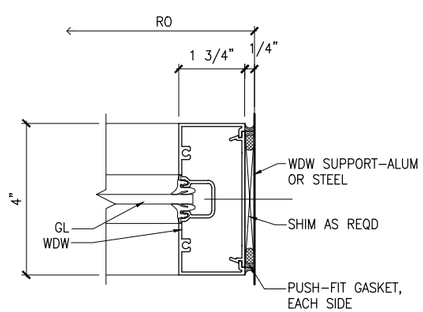

6 TYP JAMB AT WINDOW
SCALE: 3" = 1'-0"

NO.	DATE	BY	CHECK	DESIGN	REVISION / SUBMITTAL

AECOM

90% SUBMISSION - 01/22/16

METROPOLITAN COUNCIL

SOUTHWEST Green Line LRT Extension

CIVIL - VOLUME 11E
STATIONS COMMON DETAILS
WINDOW TYPES AND DETAILS

DISCIPLINE: ARCHITECTURE

SHEET NAME: D0-ARC-DTL-590

SHEET 58 OF 111

Jan, 18 2016 11:43 am V:\3400_ADC\CAD\OVERALL\plan sheets\architecture\D0-ARC-DTL-590.dwg By: v-mccarrtp

GENERAL SHEET NOTES

1. SEE SHEET A010 IN VOLUMES 11B, 11C, AND 11D FOR SPECIFIC FINISH/COLOR AT STATION COMPONENTS

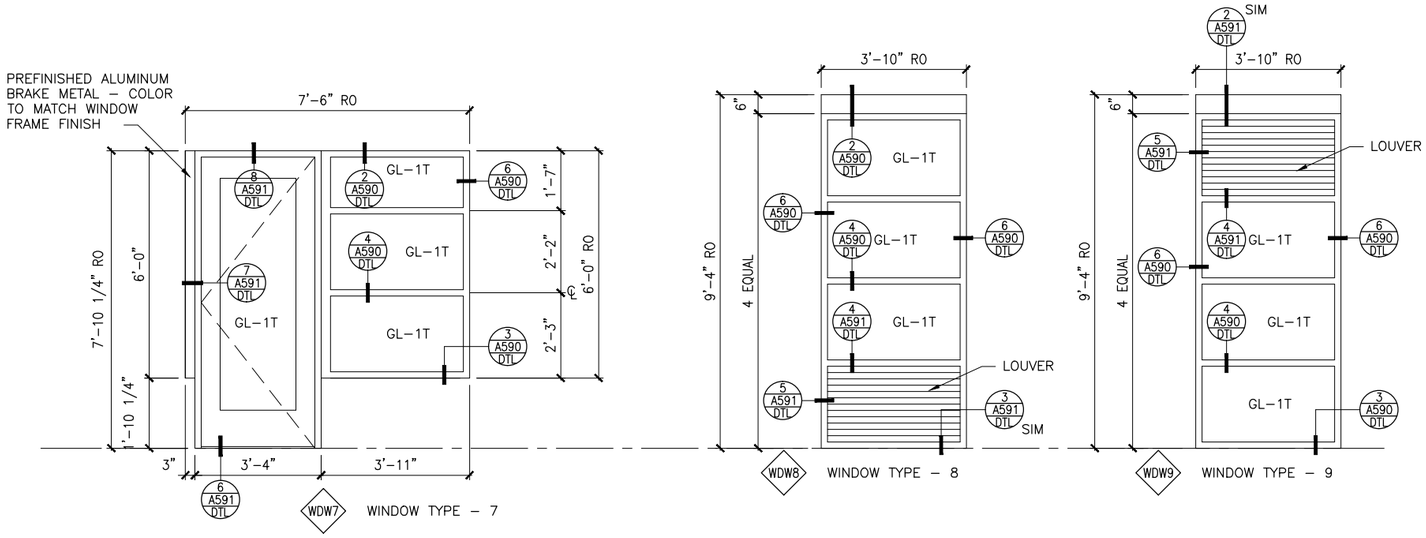

1 WINDOW TYPES AT STATIONS
SCALE: 1/4"=1'-0"

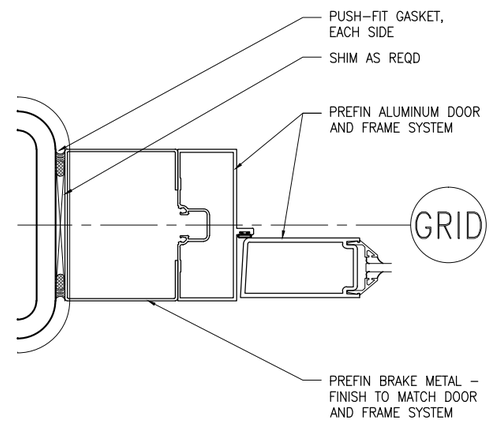

7 TYP JAMB AT DOOR
SCALE: 3"=1'-0"

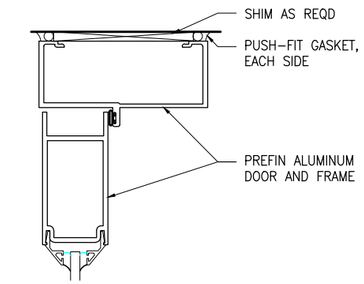

8 TYP HEAD AT DOOR
SCALE: 3"=1'-0"

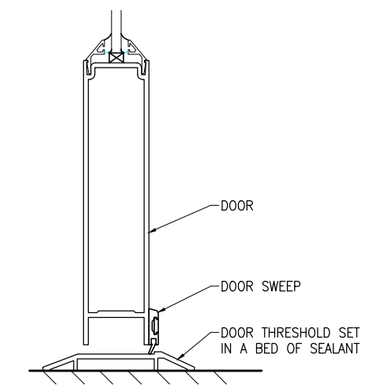

6 TYP SILL AT DOOR
SCALE: 3"=1'-0"

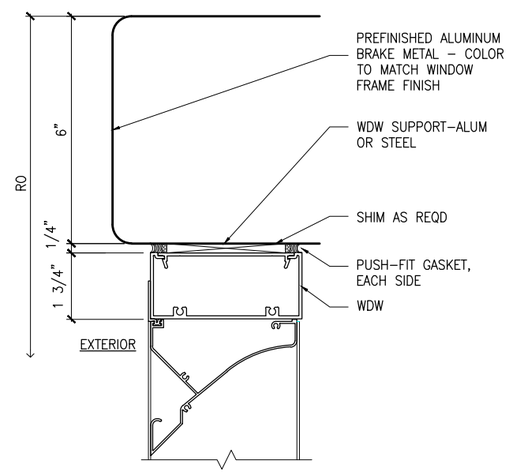

2 TYP HEAD AT WINDOW
SCALE: 3"=1'-0"

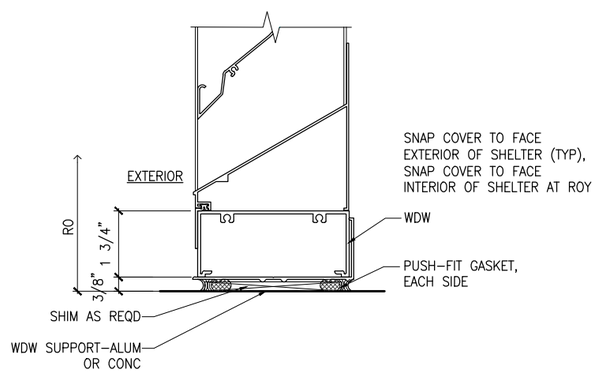

3 TYP SILL AT WINDOW
SCALE: 3"=1'-0"

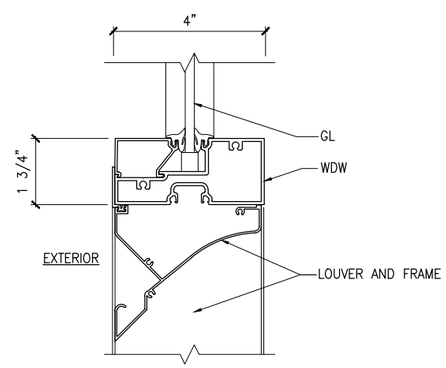

4 TYP HORIZONTAL AT WINDOW
SCALE: 3"=1'-0"

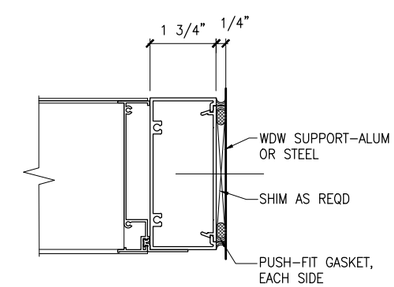

5 TYP JAMB AT WINDOW
SCALE: 3"=1'-0"

NO.	DATE	BY	CHECK	DESIGN	REVISION / SUBMITTAL

AECOM

90% SUBMISSION - 01/22/16

METROPOLITAN COUNCIL

SOUTHWEST Green Line LRT Extension

CIVIL - VOLUME 11E
STATIONS COMMON DETAILS
WINDOW TYPES AND DETAILS

DISCIPLINE: ARCHITECTURE

SHEET NAME: D0-ARC-DTL-591

SHEET 59 OF 111

Jan, 18 2016 11:43 am V:\3400_ADC\CAD\OVERALL\plan sheets\architecture\D0-ARC-DTL-591.dwg By: v-mccarrtp

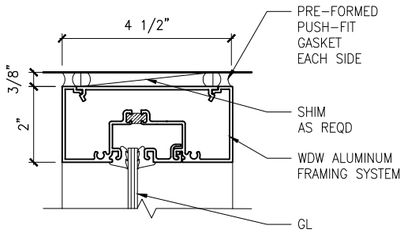

3 HEAD DETAIL
SCALE: 3"=1'-0"

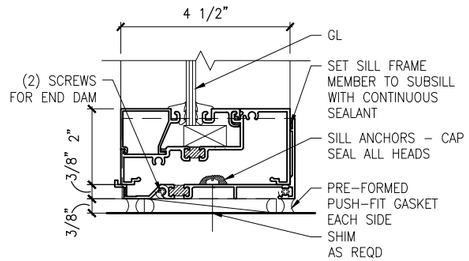

6 SILL DETAIL
SCALE: 3"=1'-0"

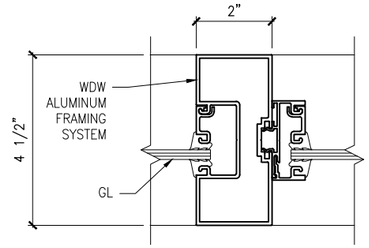

9 DOOR HEAD TRANSOM DETAIL
SCALE: 3"=1'-0"

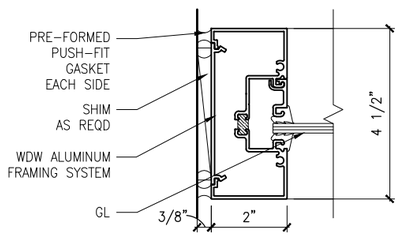

2 JAMB DETAIL
SCALE: 3"=1'-0"

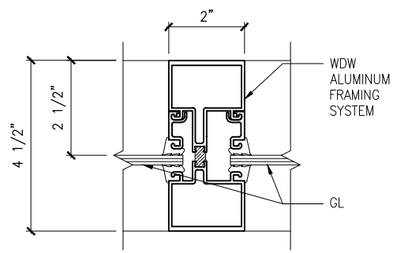

5 VERTICAL DETAIL
SCALE: 3"=1'-0"

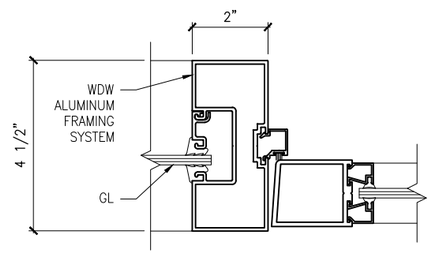

8 DOOR JAMB SIDELITE DETAIL
SCALE: 3"=1'-0"

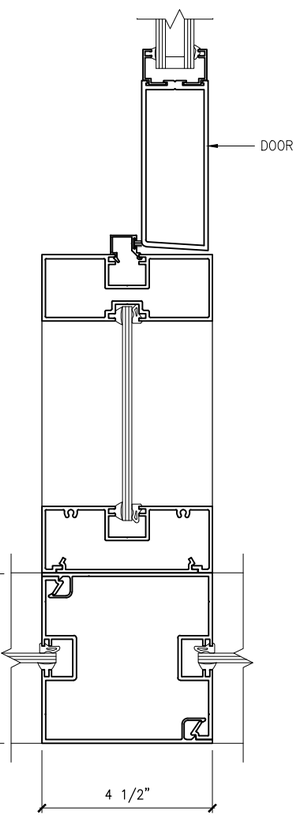

10 SIDELITE DETAIL
SCALE: 3"=1'-0"

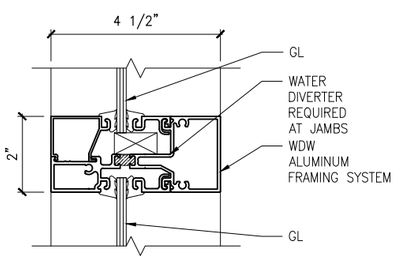

1 HORIZONTAL DETAIL
SCALE: 3"=1'-0"

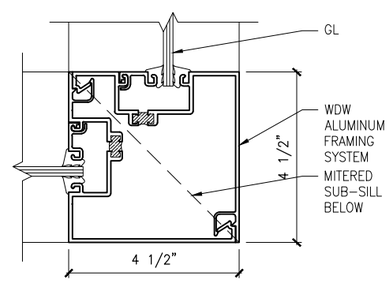

4 CORNER DETAIL
SCALE: 3"=1'-0"

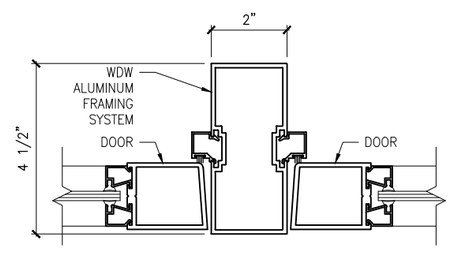

7 MEETING RAIL MULLION DETAIL
SCALE: 3"=1'-0"

0 1" 2" 4"
SCALE

NO.	DATE	BY	CHECK	DESIGN	REVISION / SUBMITTAL

AECOM

90% SUBMISSION - 01/22/16

METROPOLITAN COUNCIL

SOUTHWEST Green Line LRT Extension

CIVIL - VOLUME 11E
STATIONS COMMON DETAILS
PB STOREFRONT DETAILS

DISCIPLINE: ARCHITECTURE

SHEET NAME: D0-ARC-DTL-595

SHEET 60 OF 111

Jan, 19 2016 08:33 pm V:\3400_ADC\CAD\OVERALL\PLAN SHEETS\ARCHITECTURE\D0-ARC-DTL-595.dwg By: Ebsenjr

Project Architect : Station Architecture
W: 612-373-3068, C: 612-710-7672
timothy.mccarrick@metrotransit.org

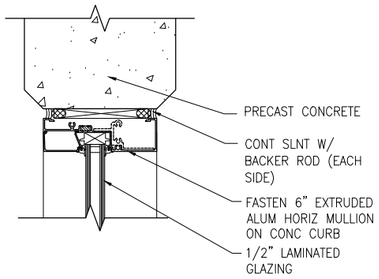

1 STOREFRONT – HEAD
SCALE: 1 1/2"=1'–0"

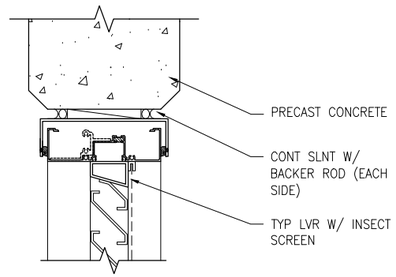

4 STOREFROWT LOUVER – HEAD
SCALE: 1 1/2"=1'–0"

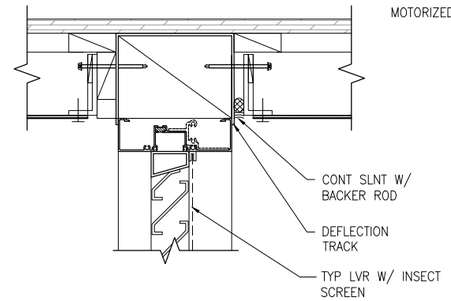

7 STOREFRONT LOUVER – HEAD
SCALE: 1 1/2"=1'–0"

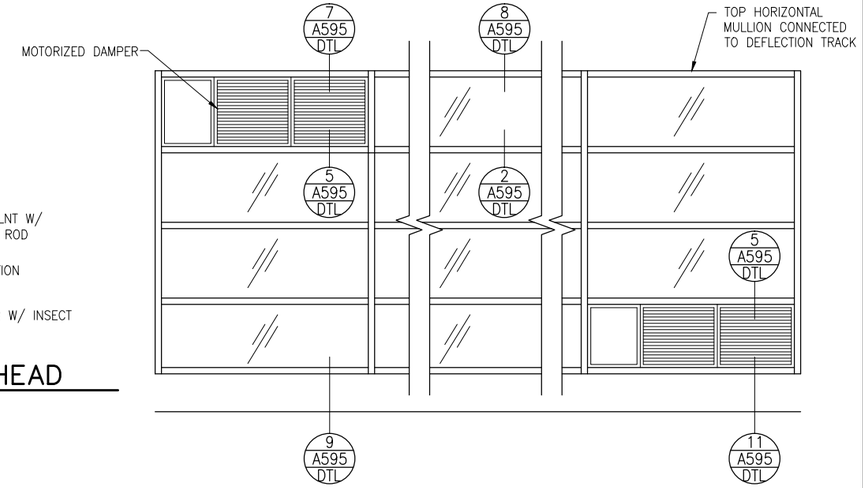

10 BRIDGE STOREFRONT ELEV. – TYP. BAY
SCALE: 1 1/2"=1'–0"

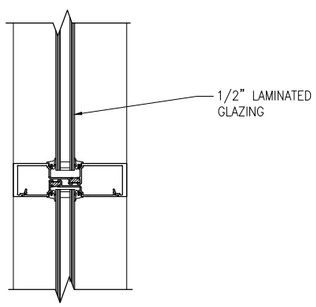

2 STOREFRONT – INTERMEDIATE
SCALE: 1 1/2"=1'–0"

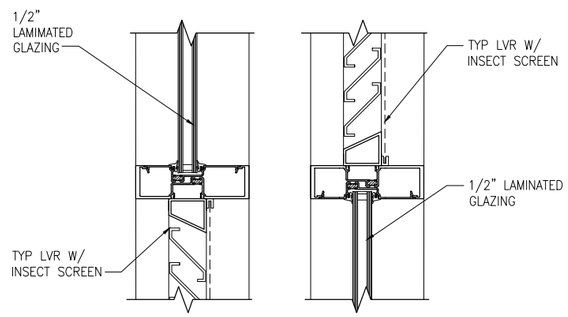

5 STOREFRONT LOUVER – INT.
SCALE: 1 1/2"=1'–0"

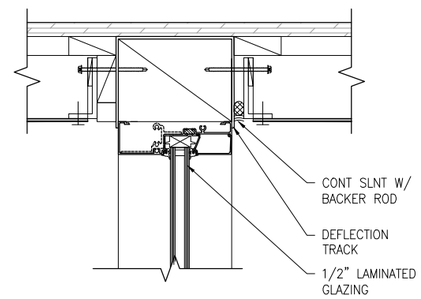

8 STOREFRONT – HEAD
SCALE: 1 1/2"=1'–0"

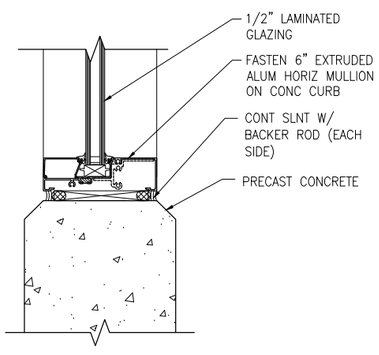

3 STOREFRONT – SILL
SCALE: 1 1/2"=1'–0"

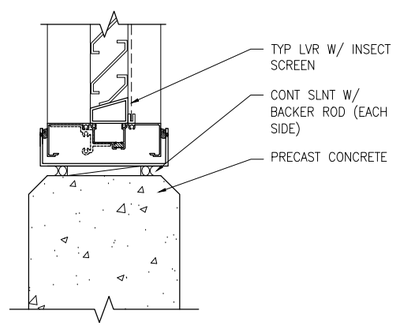

6 STOREFRONT LOUVER– SILL
SCALE: 1 1/2"=1'–0"

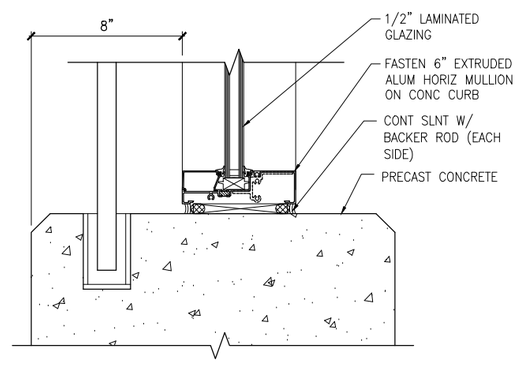

9 STOREFRONT – SILL – BRIDGE
SCALE: 1 1/2"=1'–0"

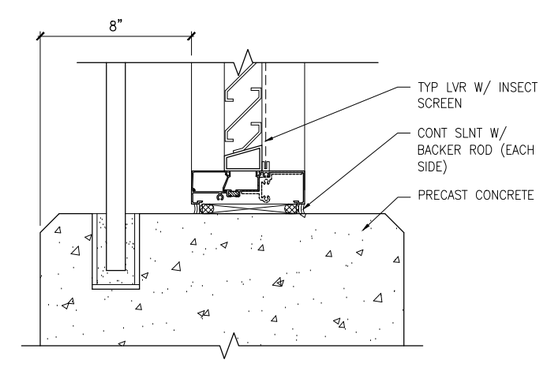

11 STOREFRONT LOUVER– SILL – BRIDGE
SCALE: 1 1/2"=1'–0"

NO.	DATE	BY	CHECK	DESIGN	REVISION / SUBMITTAL
.	.	.	.	.	.

AECOM

90% SUBMISSION - 01/22/16

METROPOLITAN COUNCIL

SOUTHWEST Green Line LRT Extension

CIVIL - VOLUME 11E
STATIONS COMMON DETAILS
PB STOREFRONT DETAILS

DISCIPLINE: ARCHITECTURE

SHEET NAME: D0-ARC-DTL-596

SHEET 61 OF 111

Jan, 18 2016 11:43 am V:\3400_ADC\CAD\OVERALL\plan sheets\architecture\D0-ARC-DTL-596.dwg By: v-mccarrtp

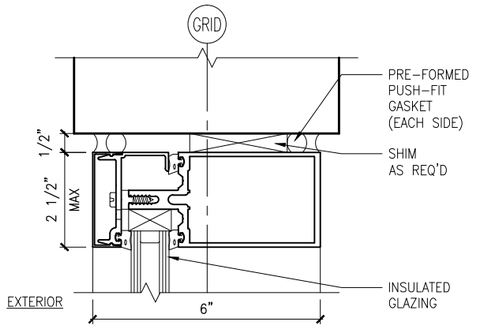

3 HEAD DETAIL
SCALE: 3"=1'-0"

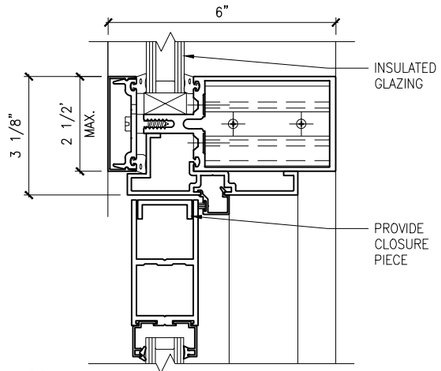

6 DOOR HEAD TRANSOM DETAIL
SCALE: 3"=1'-0"

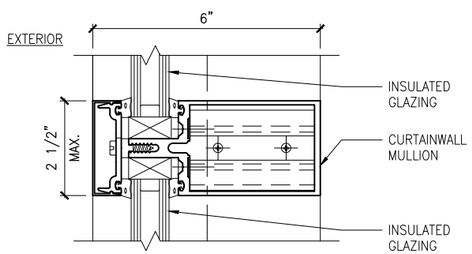

2 HORIZONTAL DETAIL
SCALE: 3"=1'-0"

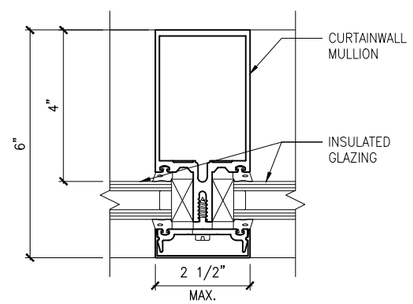

5 VERTICAL DETAIL
SCALE: 3"=1'-0"

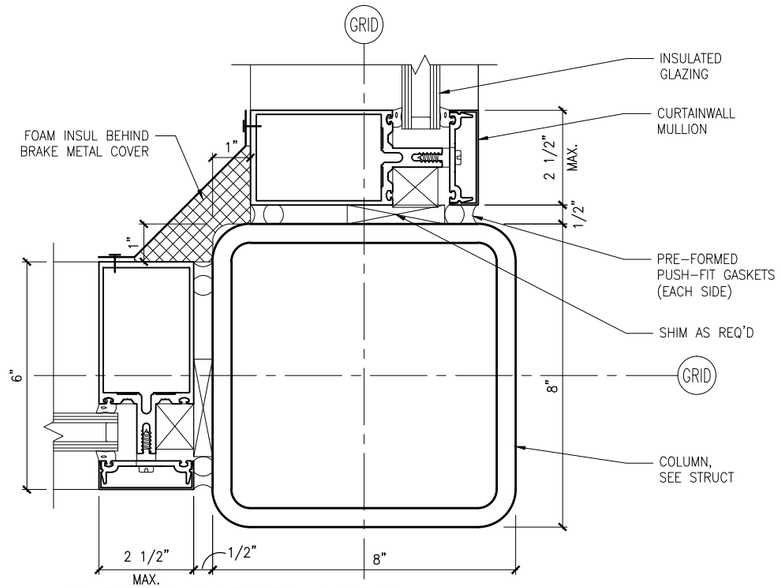

8 OUTSIDE CORNER DETAIL
SCALE: 3"=1'-0"

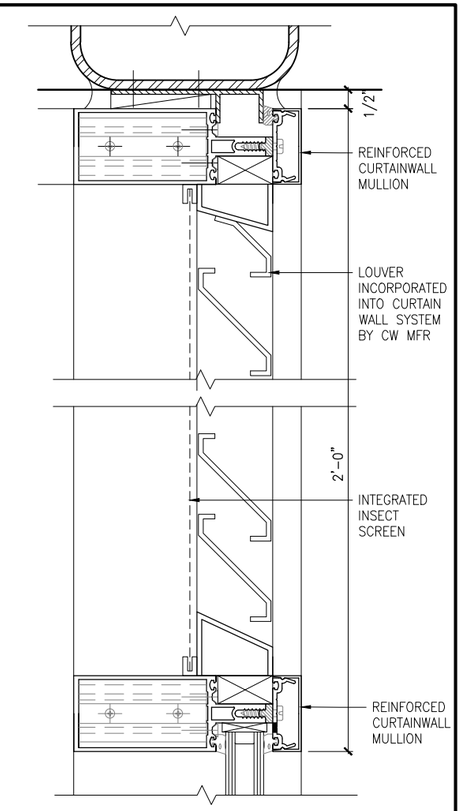

10 EMBEDED LOUVER DETAIL
SCALE:3"=1'-0"

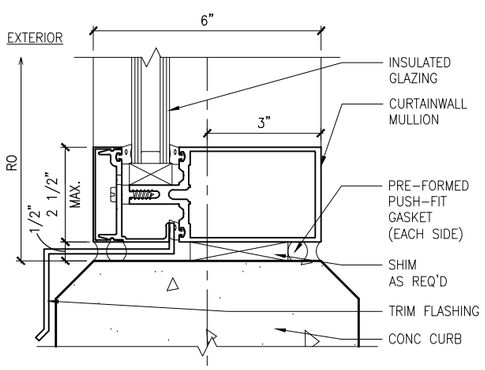

1 SILL DETAIL
SCALE: 3"=1'-0"

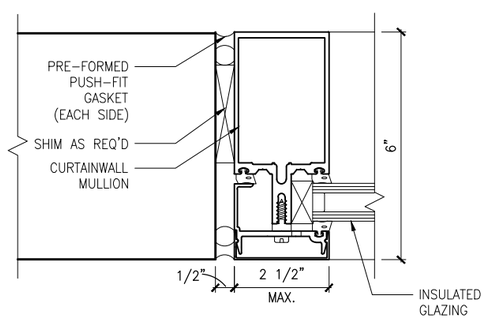

4 JAMB DETAIL
SCALE: 3"=1'-0"

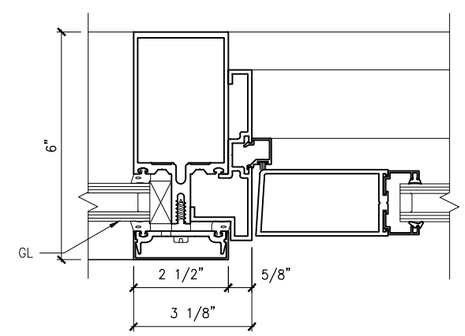

7 DOOR JAMB SIDELITE DETAIL
SCALE: 3"=1'-0"

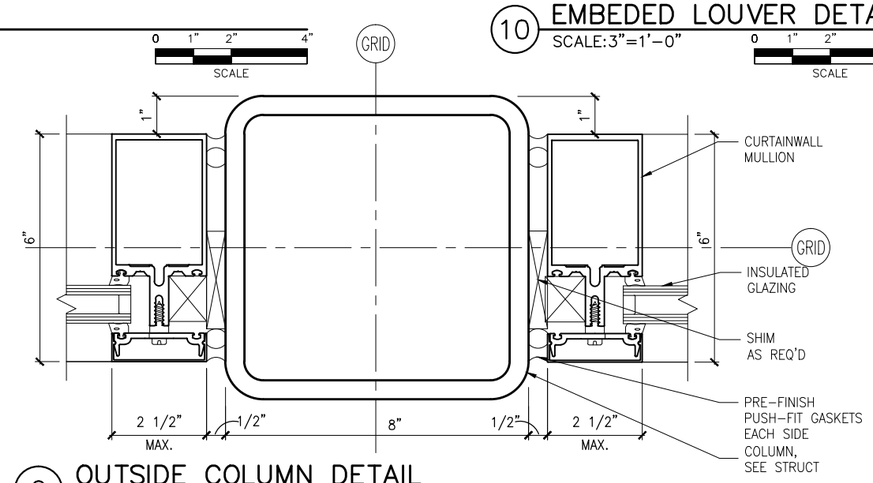

9 OUTSIDE COLUMN DETAIL
SCALE: 3"=1'-0"

NO.	DATE	BY	CHECK	DESIGN	REVISION / SUBMITTAL

AECOM

90% SUBMISSION - 01/22/16

METROPOLITAN COUNCIL

SOUTHWEST Green Line LRT Extension

CIVIL - VOLUME 11E
STATIONS COMMON DETAILS
VC CURTAINWALL DETAILS

DISCIPLINE: ARCHITECTURE

SHEET NAME: D0-ARC-DTL-600

SHEET 62 OF 111

Jan, 19 2016 08:34 pm V:\3400_ADC\CAD\OVERALL\PLAN SHEETS\ARCHITECTURE\D0-ARC-DTL-600.dwg By: Ebsenjr

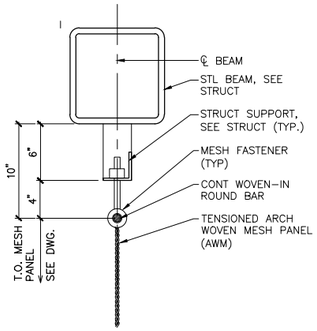

1C SCALE: 3/4"=1'-0"

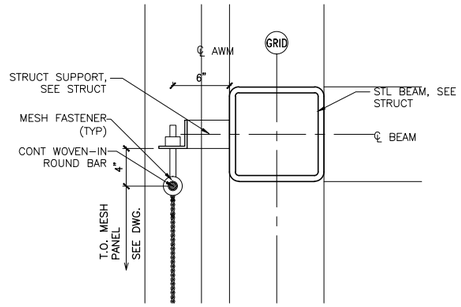

2C SCALE: 3/4"=1'-0"

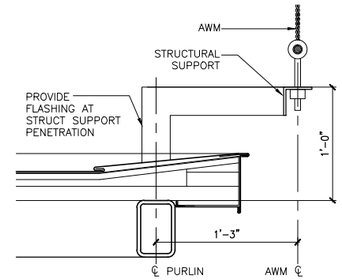

3C SCALE: 3/4"=1'-0"

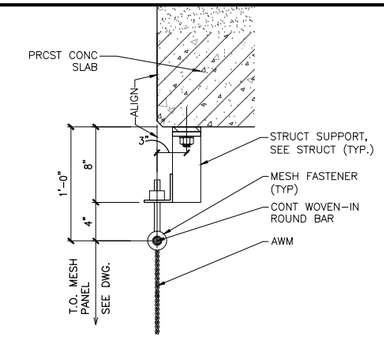

4C SCALE: 3/4"=1'-0"

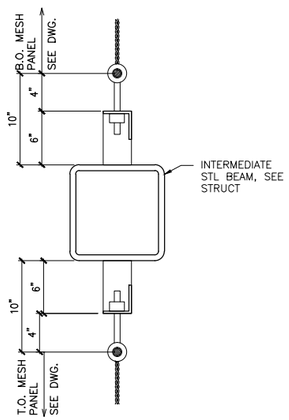

1B SECT: ALONG STRUCT BEAM
SCALE: 3/4"=1'-0"

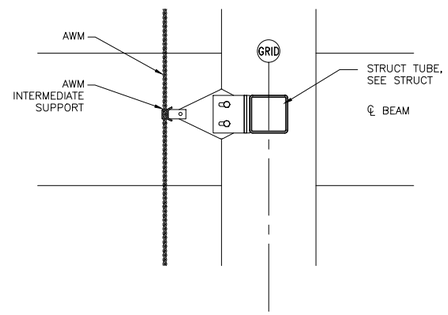

2B SCALE: 3/4"=1'-0"

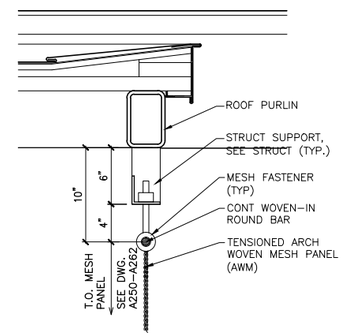

3B SCALE: 3/4"=1'-0"

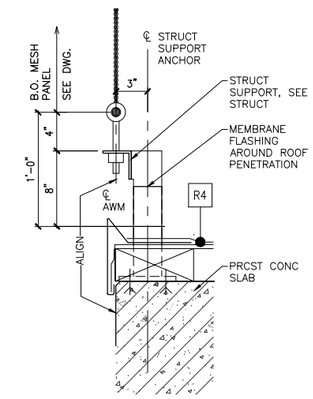

4B SCALE: 3/4"=1'-0"

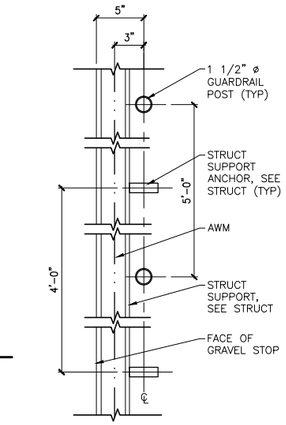

4D PLAN
SCALE: 3/4"=1'-0"

STRUCT SUPPORT, SEE STRUCT

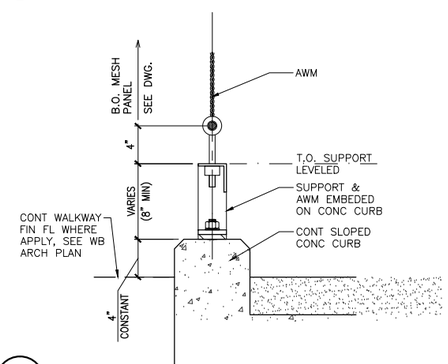

1A SCALE: 3/4"=1'-0"

1 SECT: CONC WALKWAY EDGE
SCALE: 3/4"=1'-0"

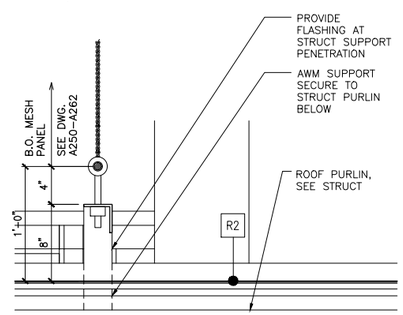

2A SCALE: 3/4"=1'-0"

2 SECT: EXT STRUCT FRAMES
SCALE: 3/4"=1'-0"

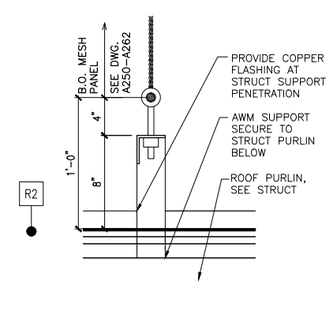

3A SCALE: 3/4"=1'-0"

3 SECT: FLAT ROOF EDGE
SCALE: 3/4"=1'-0"

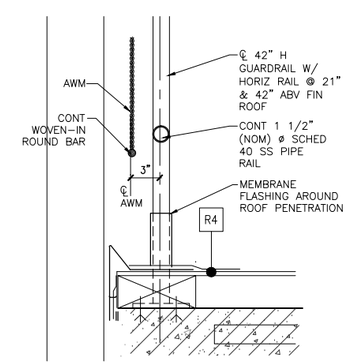

4A SCALE: 3/4"=1'-0"

4 SECT: PRECAST SLAB EDGE
SCALE: 3/4"=1'-0"

NO.	DATE	BY	CHECK	DESIGN	REVISION / SUBMITTAL
.	.	.	.	.	.

AECOM

90% SUBMISSION - 01/22/16

METROPOLITAN COUNCIL

SOUTHWEST Green Line LRT Extension

CIVIL - VOLUME 11E
STATIONS COMMON DETAILS
VC MESH DETAILS

DISCIPLINE: ARCHITECTURE

SHEET NAME: D0-ARC-DTL-650

SHEET 63 OF 111

Jan, 19 2016 08:34 pm V:\3400_ADC\CAD\OVERALL\PLAN SHEETS\ARCHITECTURE\D0-ARC-DTL-650.dwg By: Ebsenjr

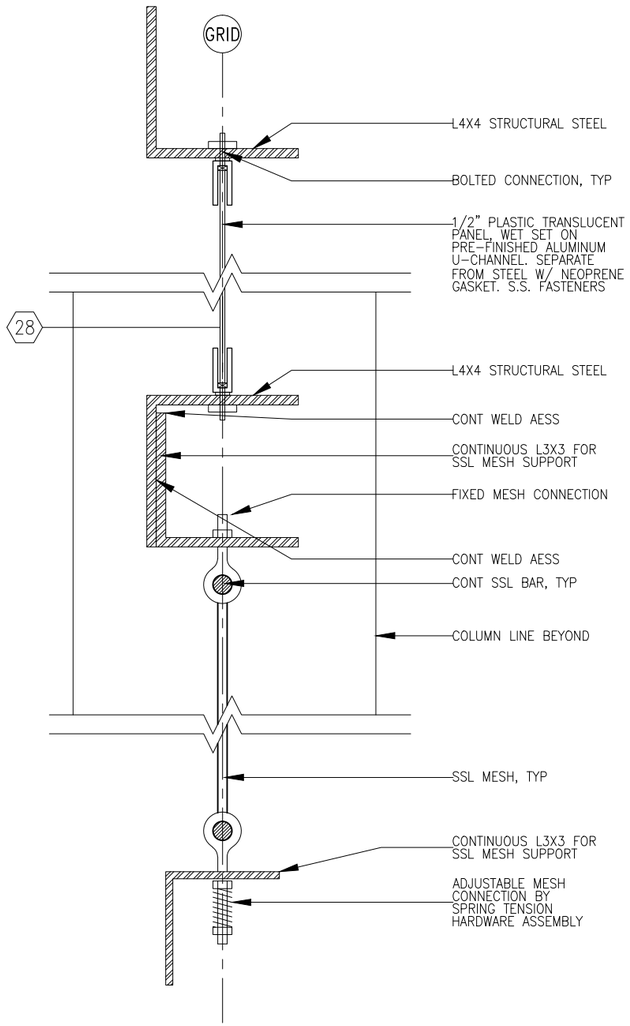

1 METAL MESH ATTACHMENT
SCALE: 3"=1'-0"

0 1" 2" 4"
SCALE

Jan, 19 2016 08:34 pm V:\3400_ADC\CAD\OVERALL\PLAN SHEETS\ARCHITECTURE\D0-ARC-DTL-651.dwg By: Ebsenjr

NO.	DATE	BY	CHECK	DESIGN	REVISION / SUBMITTAL
.	.	.	.	.	.

AECOM

90% SUBMISSION - 01/22/16

METROPOLITAN COUNCIL

SOUTHWEST Green Line LRT Extension

CIVIL - VOLUME 11E
STATIONS COMMON DETAILS
VC MESH DETAILS

DISCIPLINE: ARCHITECTURE

SHEET NAME: D0-ARC-DTL-651

SHEET 64 OF 111

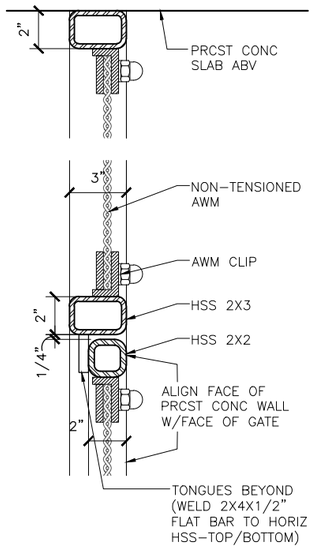

1 AWM DOOR HEAD
SCALE: 3"=1'-0"

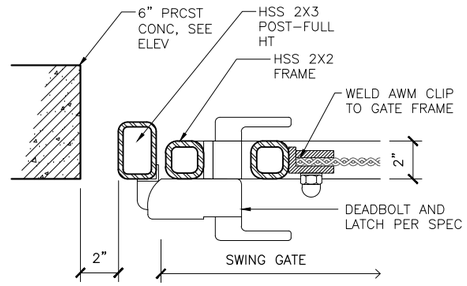

3 AWM DOOR JAMB
SCALE: 3"=1'-0"

0 1" 2" 4"
SCALE

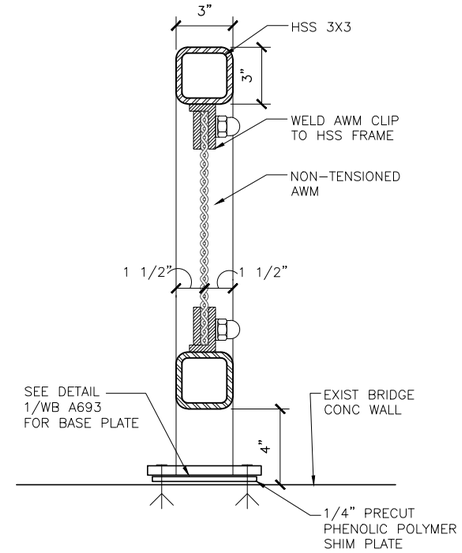

6 TYPICAL AWM PANEL SECTION
SCALE: 3"=1'-0"

0 1" 2" 4"
SCALE

SEE ENLARGED PLANS
FOR GATE PLANS.

GEN NOTES
1. ALL WELDS TO BE
AESS

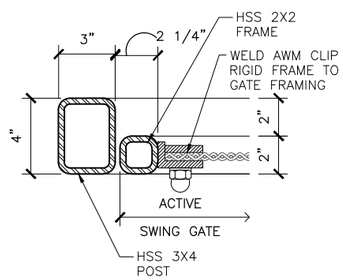

4 AWM DOOR JAMB
SCALE: 3"=1'-0"

0 1" 2" 4"
SCALE

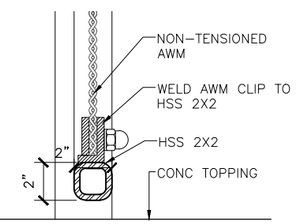

2 AWM DOOR SILL
SCALE: 3"=1'-0"

0 1" 2" 4"
SCALE

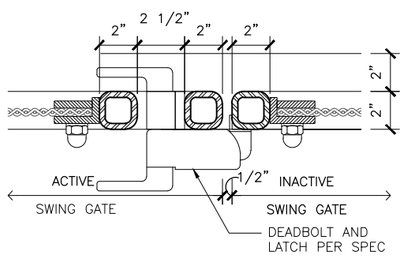

5 AWM DOOR LOCK
SCALE: 3"=1'-0"

0 1" 2" 4"
SCALE

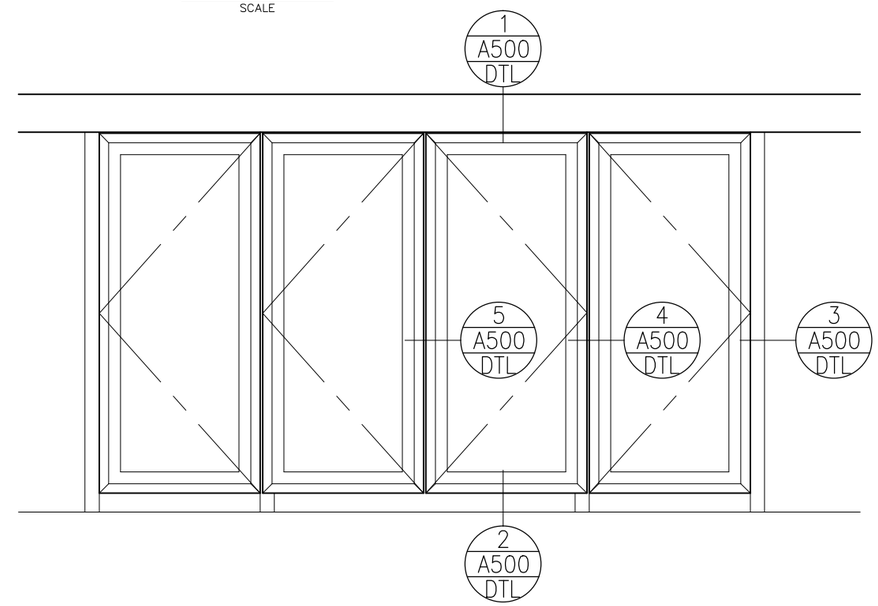

5 METAL MESH ATTACHMENT
SCALE: 3"=1'-0"

0 1" 2" 4"
SCALE

NO.	DATE	BY	CHECK	DESIGN	REVISION / SUBMITTAL
.	.	.	.	.	.

AECOM

90% SUBMISSION - 01/22/16

METROPOLITAN COUNCIL

SOUTHWEST Green Line LRT Extension

CIVIL - VOLUME 11E
STATIONS COMMON DETAILS
VC MESH DETAILS - GATES

DISCIPLINE: ARCHITECTURE

SHEET NAME: D0-ARC-DTL-660

SHEET 65 OF 111

Jan, 19 2016 08:35 pm V:\3400_ADC\CAD\OVERALL\PLAN SHEETS\ARCHITECTURE\D0-ARC-DTL-660.dwg By: Ebsenjr

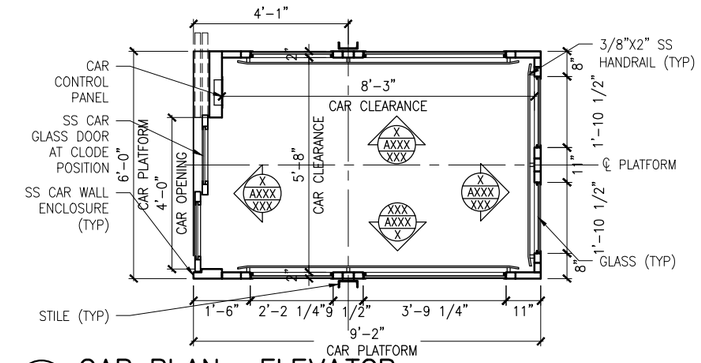

1 CAB PLAN– ELEVATOR
SCALE: 1/2"=1'-0"
0 1 2 4
SCALE

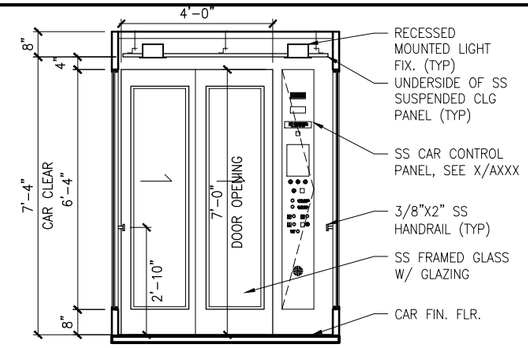

4 CAB ELEVATION– ELEVATOR
SCALE: 1/2"=1'-0"
0 1 2 4
SCALE

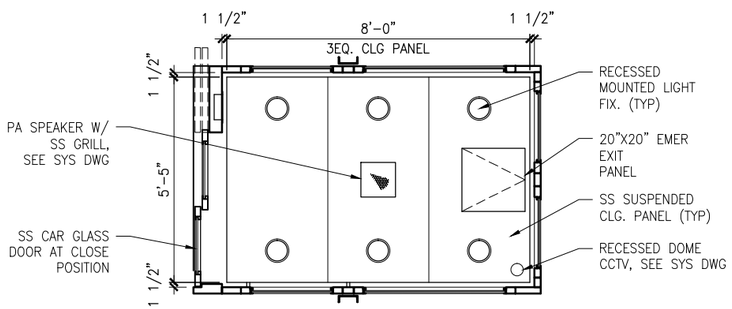

2 CEILING PLAN– ELEVATOR
SCALE: 1/2"=1'-0"
0 1 2 4
SCALE

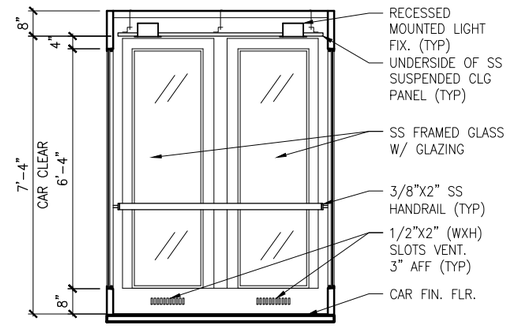

5 CAB ELEVATION– ELEVATOR
SCALE: 1/2"=1'-0"
0 1 2 4
SCALE

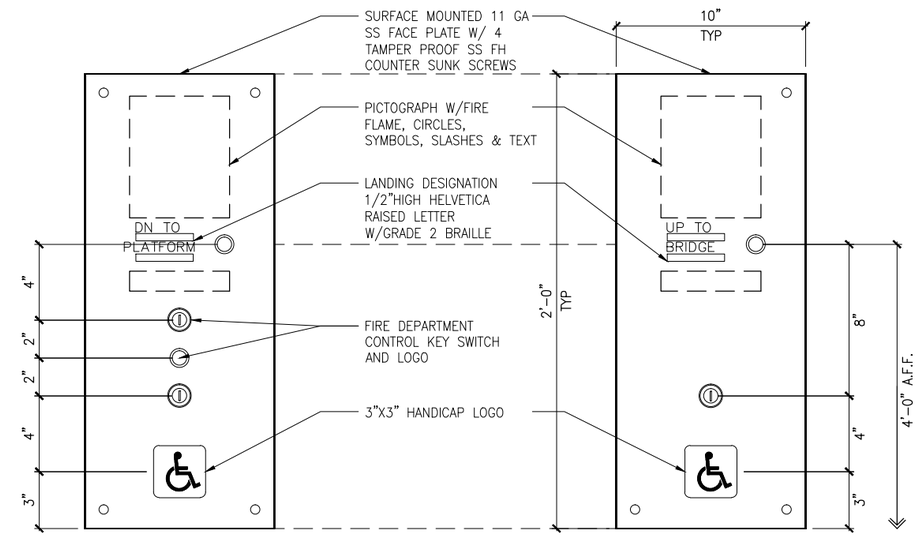

6 ELEVATOR CALL STATION
SCALE: 1 1/2"=1'-0"
0 2" 4" 8"
SCALE

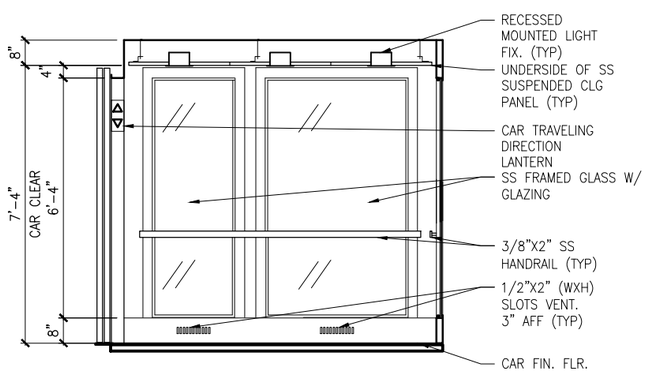

3 CAB ELEVATION– ELEVATOR
SCALE: 1/2"=1'-0"
0 1 2 4
SCALE

NO.	DATE	BY	CHECK	DESIGN	REVISION / SUBMITTAL

AECOM

90% SUBMISSION - 01/22/16

METROPOLITAN COUNCIL

SOUTHWEST Green Line LRT Extension

CIVIL - VOLUME 11E
STATIONS COMMON DETAILS
ELEVATOR CAB PLANS

DISCIPLINE: ARCHITECTURE

SHEET NAME: D0-ARC-DTL-700

SHEET 66 OF 111

Jan, 19 2016 08:35 pm V:\3400_ADC\CAD\OVERALL\PLAN SHEETS\ARCHITECTURE\D0-ARC-DTL-700.dwg By: Ebsenjr

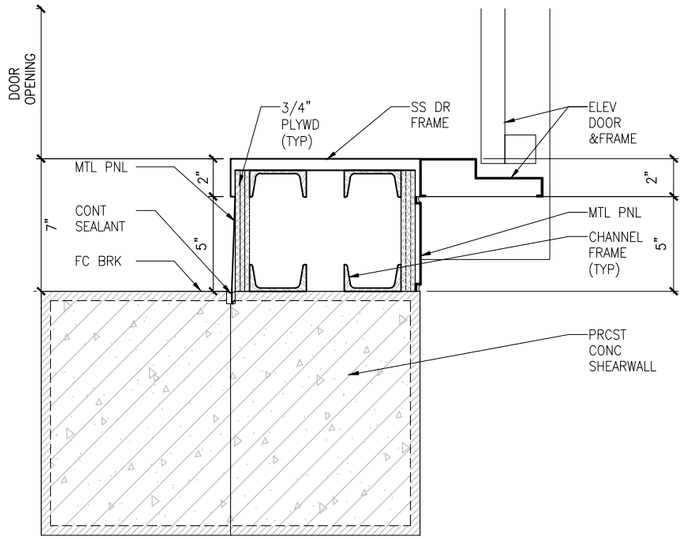

1 JAMB SECTION

SCALE: 1 1/2"=1'-0"

0 2" 4" 8"
SCALE

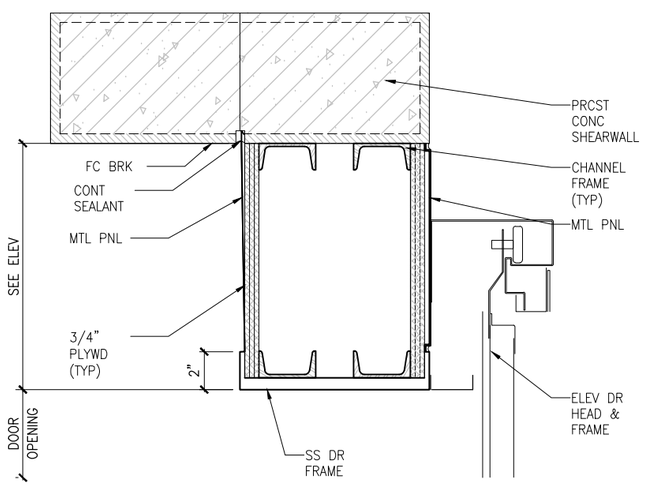

2 HEAD SECTION

SCALE: 1 1/2"=1'-0"

0 2" 4" 8"
SCALE

NO.	DATE	BY	CHECK	DESIGN	REVISION / SUBMITTAL

AECOM

90% SUBMISSION - 01/22/16

METROPOLITAN COUNCIL

SOUTHWEST Green Line LRT Extension

CIVIL - VOLUME 11E
STATIONS COMMON DETAILS
ELEVATOR CAB ELEVATIONS AND DETAILS

DISCIPLINE: ARCHITECTURE

SHEET NAME: D0-ARC-DTL-701

SHEET 67 OF 111

Jan, 19 2016 08:35 pm V:\3400_ADC\CAD\OVERALL\PLAN SHEETS\ARCHITECTURE\D0-ARC-DTL-701.dwg By: Ebsenjr

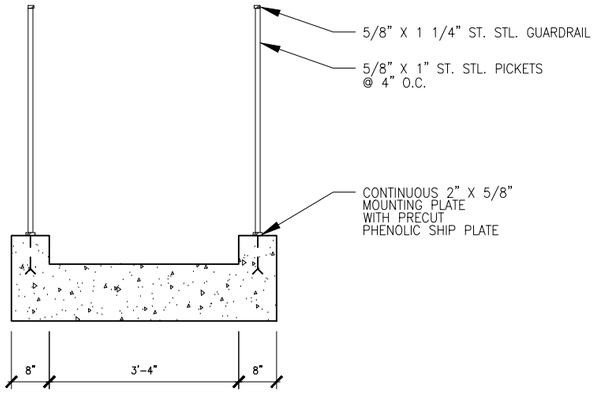

1 PRECAST STAIR CROSS SECTION
SCALE: 3/8"=1'-0"
0 8" 16" 32" SCALE

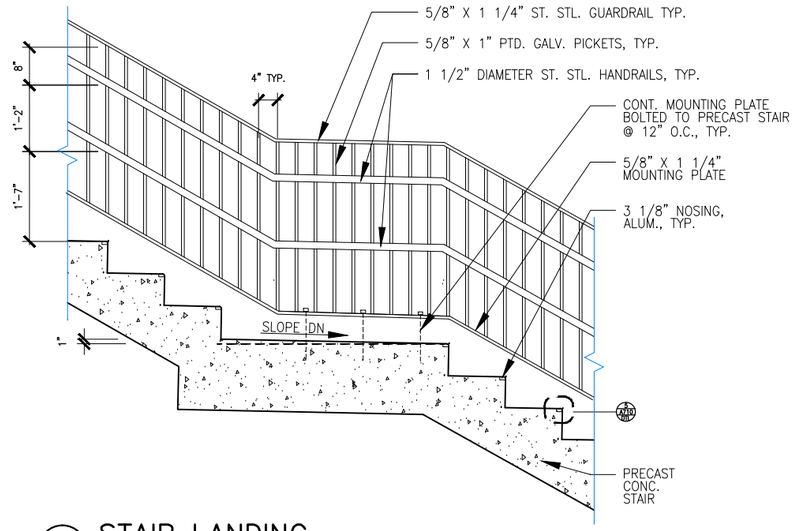

2 STAIR LANDING
SCALE: 3/8"=1'-0"
0 8" 16" 32" SCALE

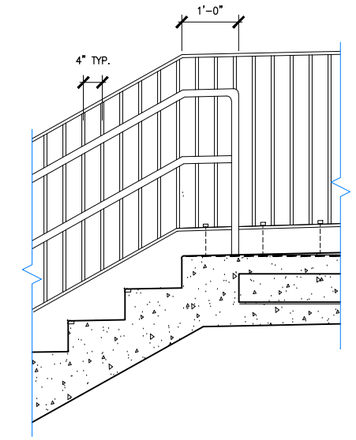

3 TOP OF STAIR
SCALE: 3/8"=1'-0"
0 8" 16" 32" SCALE

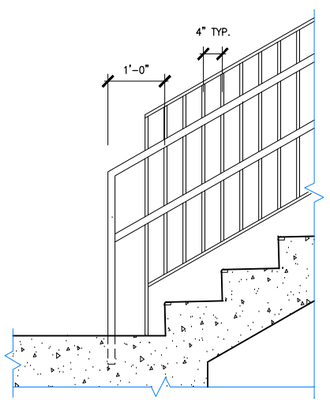

4 BOTTOM OF STAIR
SCALE: 3/8"=1'-0"
0 8" 16" 32" SCALE

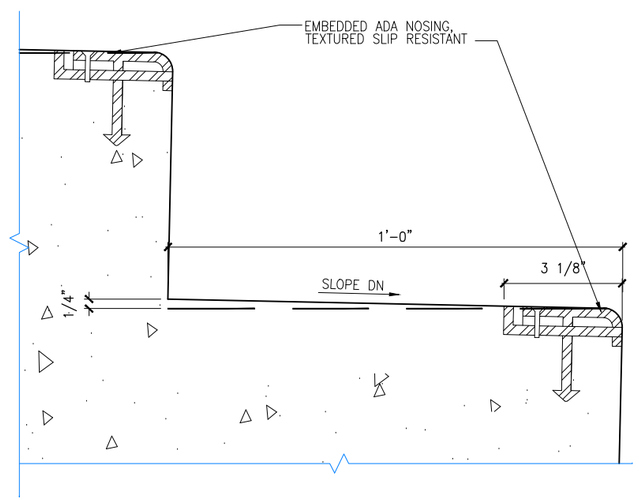

5 TYPICAL STAIR NOSING
SCALE:3"=1'-0"
0 1" 2" 4" SCALE

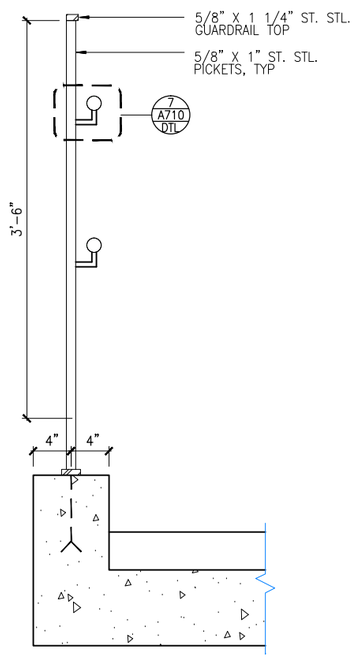

6 TYPICAL GUARDRAIL SECTION
SCALE: 3/4"=1'-0"
0 4" 8" 16" SCALE

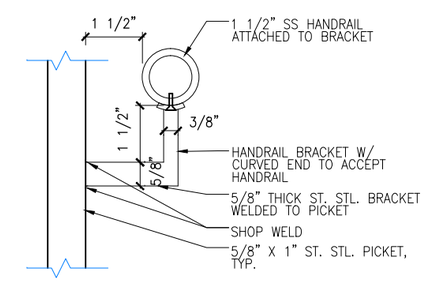

7 TYP. HANDRAIL CONN. DETAIL
SCALE: 3"=1'-0"
0 1" 2" 4" SCALE

NO.	DATE	BY	CHECK	DESIGN	REVISION / SUBMITTAL
.	.	.	.	.	.

AECOM

90% SUBMISSION - 01/22/16

METROPOLITAN COUNCIL

SOUTHWEST Green Line LRT Extension

CIVIL - VOLUME 11E
STATIONS COMMON DETAILS
STAIR DETAILS

DISCIPLINE: ARCHITECTURE

SHEET NAME: D0-ARC-DTL-710

SHEET 68 OF 111

Jan, 19 2016 08:36 pm V:\3400_ADC\CAD\OVERALL\PLAN SHEETS\ARCHITECTURE\D0-ARC-DTL-710.dwg By: Ebsenjr

PA–1 STATION IDENTIFICATION SIGN

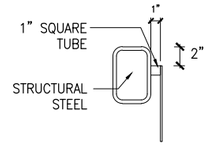

MOUNTING PA–1

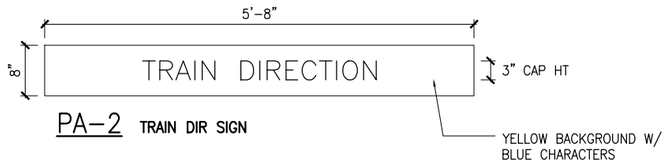

PA–2 TRAIN DIR SIGN

NOTE: SEE SPECIFICATIONS FOR TRAIN DIRECTION COPY PER STATION LOCATION

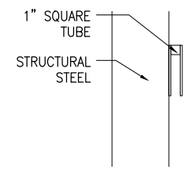

MOUNTING PA–2

1 PLATFORM AREA – COL/BEAM FACEMOUNT

SCALE: NTS

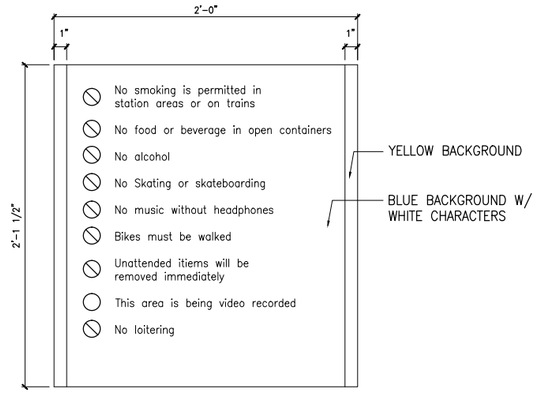

PA–6 PROHIBITED BEHAVIOR

3 PLATFORM AREA – PAINTED SS

SCALE: NTS

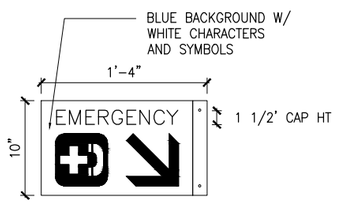

PA–3 EMERGENCY PHONE SIGN (FRONT)

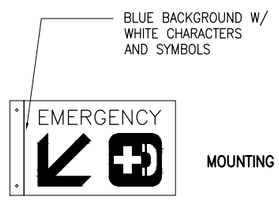

PA–3 EMERGENCY PHONE SIGN (BACK)

MOUNTING HEIGHT

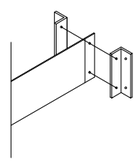

L FLANGES PREDRILLED AND TAPPED. PAINT TO MATCH ADJOINING SURFACES.

MOUNTING PA–3, PA–4, PA–5

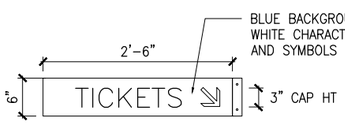

PA–4 TICKETING SIGN (FRONT)

PA–4 TICKETING SIGN (BACK)

MOUNTING HEIGHT

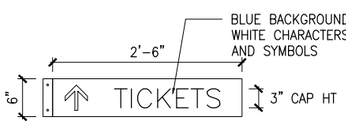

PA–5 TICKETS AHEAD SIGN (FRONT)

PA–5 TICKETS AHEAD SIGN (BACK)

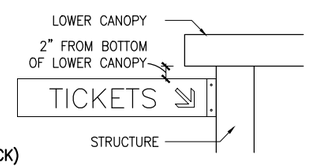

MOUNTING HEIGHT

2 PLATFORM AREA – BLADE MOUNT

SCALE: NTS

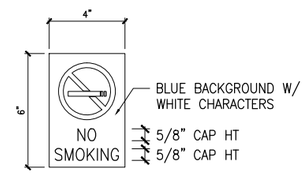

PA–7 NO SMOKING DECAL

MOUNTING HEIGHT

4 PLATFORM AREA – SURFACE MOUNT

SCALE: NTS

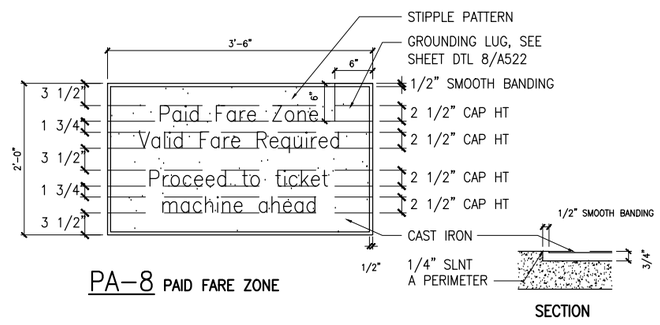

PA–8 PAID FARE ZONE

SECTION

5 PLATFORM – RECESSED METAL PLAQUE

SCALE: NTS

NO.	DATE	BY	CHECK	DESIGN	REVISION / SUBMITTAL

AECOM

90% SUBMISSION - 01/22/16

METROPOLITAN COUNCIL

SOUTHWEST Green Line LRT Extension

CIVIL - VOLUME 11E
STATIONS COMMON DETAILS
SIGNAGE DETAILS AND NOTES

DISCIPLINE: ARCHITECTURE

SHEET NAME: D0-ARC-DTL-801

SHEET 69 OF 111

Jan, 18 2016 11:46 am V:\3400_ADC\CAD\OVERALL\plan sheets\architecture\D0-ARC-DTL-801.dwg By: v-mccarrtp

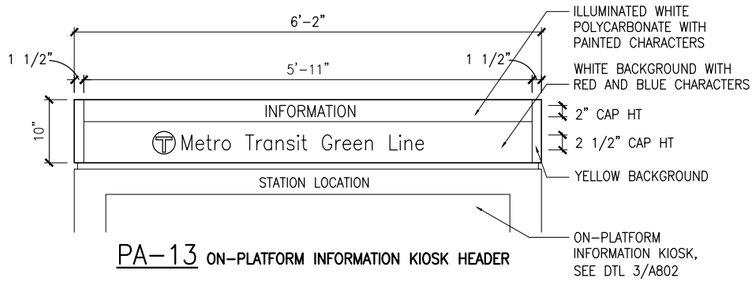

1 ON-PLATFORM KIOSK FRONT ELEVATION INFORMATION AND ADVERTISING

SCALE: 1/2" = 1'-0" 0 1 2 SCALE

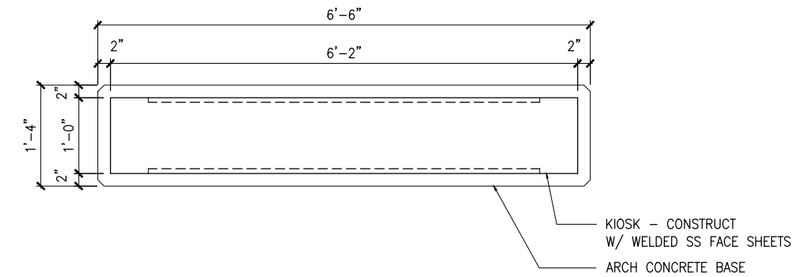

2 ON PLATFORM KIOSK PLAN

SCALE: 1/2" = 1'-0" 0 1 2 SCALE

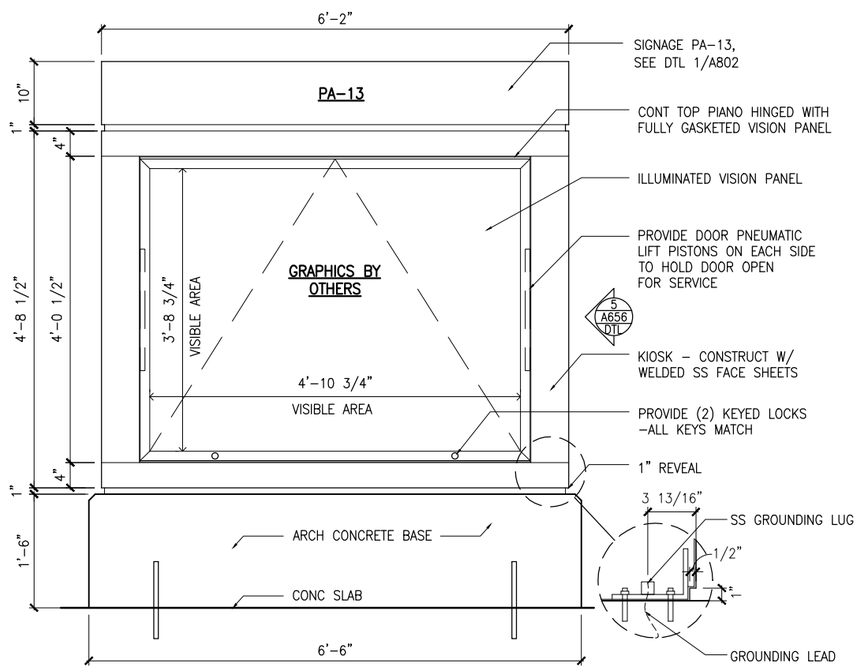

3 ON-PLATFORM KIOSK FRONT ELEVATION INFORMATION AND ADVERTISING

SCALE: 1/2" = 1'-0" 0 1 2 SCALE

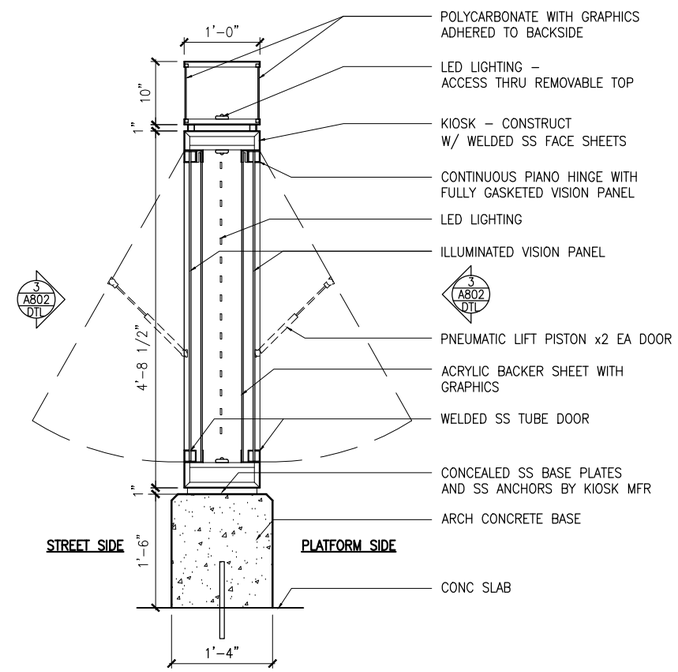

4 ON-PLATFORM KIOSK SECTION ADVERTISING

SCALE: 1/2" = 1'-0" 0 1 2 SCALE

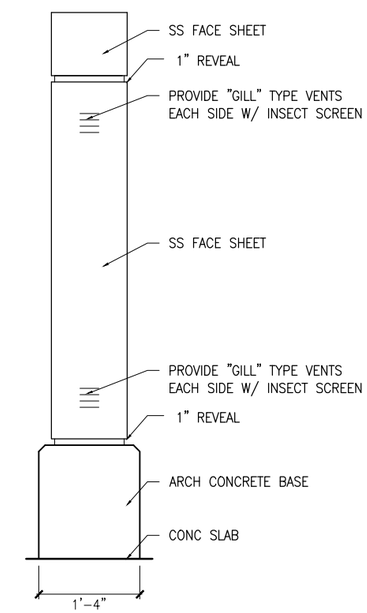

5 ON-PLATFORM KIOSK SIDE ELEVATION INFORMATION AND ADVERTISING

SCALE: 1/2" = 1'-0" 0 1 2 SCALE

NO.	DATE	BY	CHECK	DESIGN	REVISION / SUBMITTAL

AECOM

90% SUBMISSION - 01/22/16

METROPOLITAN COUNCIL

SOUTHWEST Green Line LRT Extension

CIVIL - VOLUME 11E
STATIONS COMMON DETAILS
SIGNAGE DETAILS AND NOTES

DISCIPLINE: ARCHITECTURE

SHEET NAME: D0-ARC-DTL-802

SHEET 70 OF 111

Jan, 18 2016 11:46 am V:\3400_ADC\CAD\OVERALL\plan sheets\architecture\D0-ARC-DTL-802.dwg By: v-mccarrtp

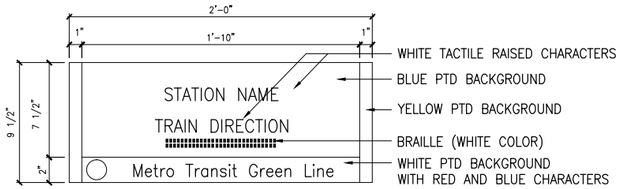

COLOR AND LAYOUT

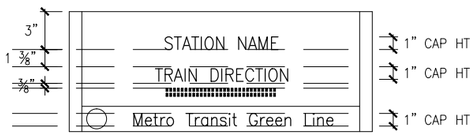

TEXT LAYOUT

PA–15 TACTILE STATION ID – ENTRY

NOTE: SEE SPECIFICATIONS FOR TRAIN DIRECTION COPY PER STATION LOCATION

1 PLATFORM AREA – PAINTED SS
SCALE: NTS

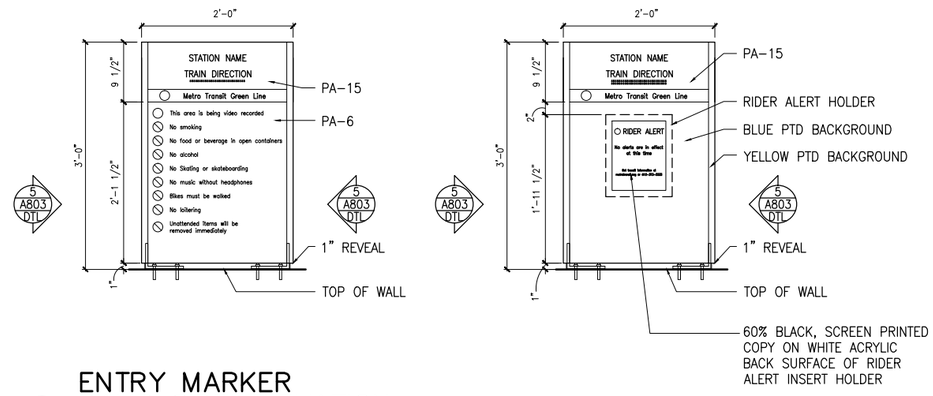

2 ENTRY MARKER
RAMP SIDE ELEVATION
SCALE: 1/2" = 1'–0"

0 1 2
SCALE

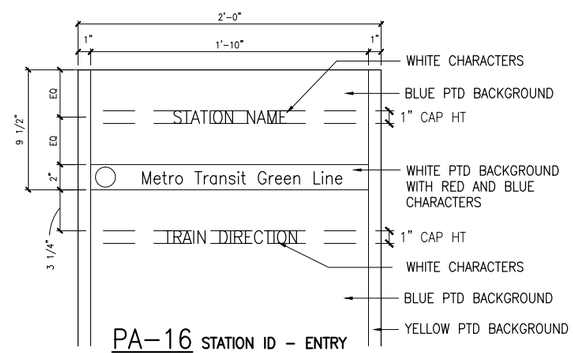

PA–16 STATION ID – ENTRY

NOTE: SEE SPECIFICATIONS FOR TRAIN DIRECTION COPY PER STATION LOCATION

3 ENTRY MARKER
TRACK SIDE ELEVATION
SCALE: NTS

0 1 2
SCALE

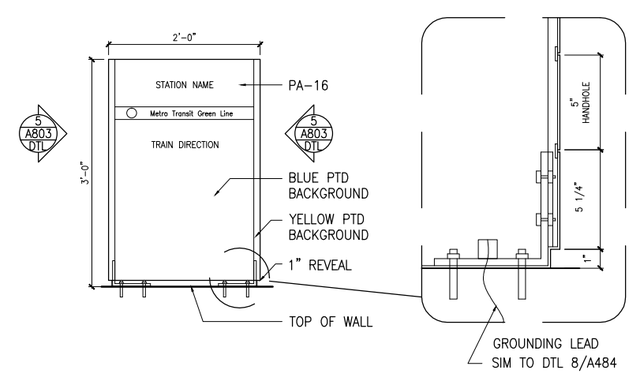

4 ENTRY MARKER
TRACK/STREET SIDE ELEVATION
SCALE: 1/2" = 1'–0"

0 1 2
SCALE

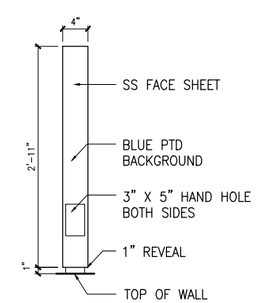

5 ENTRY MARKER
SIDE ELEVATION
SCALE: 1/2" = 1'–0"

0 1 2
SCALE

NO.	DATE	BY	CHECK	DESIGN	REVISION / SUBMITTAL

AECOM

90% SUBMISSION - 01/22/16

METROPOLITAN COUNCIL

SOUTHWEST Green Line LRT Extension

CIVIL - VOLUME 11E
STATIONS COMMON DETAILS
SIGNAGE DETAILS AND NOTES

DISCIPLINE: ARCHITECTURE

SHEET NAME: D0-ARC-DTL-803

SHEET 71 OF 111

Jan. 18 2016 11:46 am V:\3400_ADC\CAD\OVERALL\plan sheets\architecture\D0-ARC-DTL-803.dwg By: v-mccarrtp

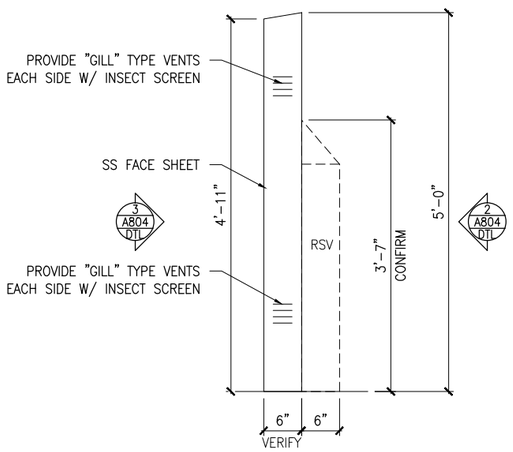

1 RIDER ALERT PANEL SIDE ELEVATION
SCALE: 1/2" = 1'-0"
0 1 2
SCALE

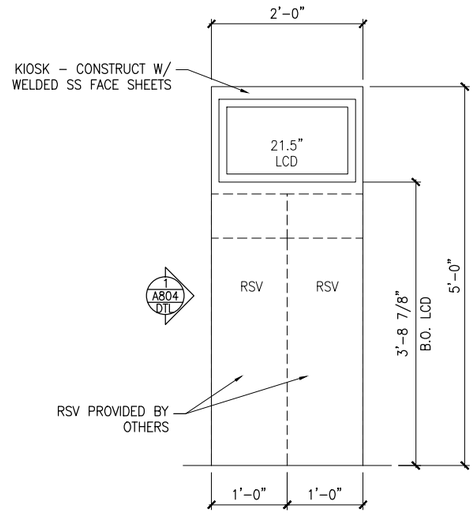

2 RIDER ALERT PANEL FRONT ELEVATION
SCALE: 1/2" = 1'-0"
0 1 2
SCALE

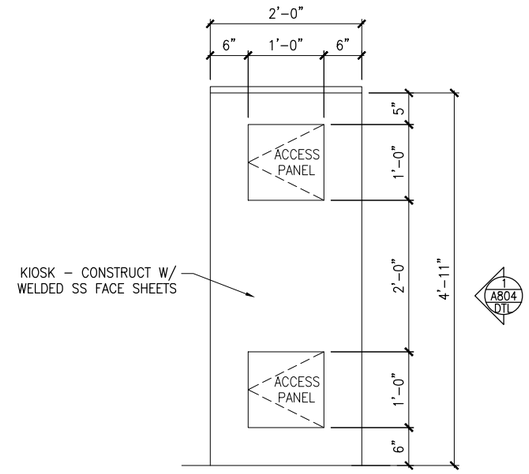

3 RIDER ALERT PANEL REAR ELEVATION
SCALE: 1/2" = 1'-0"
0 1 2
SCALE

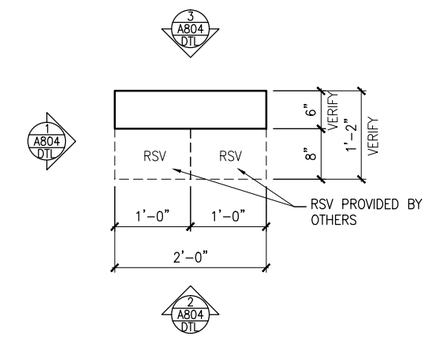

4 RIDER ALERT PANEL PLAN
SCALE: 1/2" = 1'-0"
0 1 2
SCALE

NO.	DATE	BY	CHECK	DESIGN	REVISION / SUBMITTAL

AECOM

90% SUBMISSION - 01/22/16

METROPOLITAN COUNCIL

SOUTHWEST Green Line LRT Extension

CIVIL - VOLUME 11E
STATIONS COMMON DETAILS
SIGNAGE DETAILS AND NOTES

DISCIPLINE: ARCHITECTURE

SHEET NAME: D0-ARC-DTL-804

Jan, 18 2016 11:46 am V:\3400_ADC\CAD\OVERALL\plan sheets\architecture\D0-ARC-DTL-804.dwg By: v-mccartip

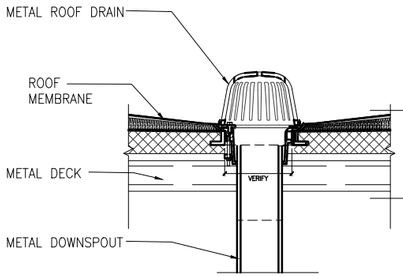

1 ROOF DRAIN
SCALE: 3/4"=1'-0"
0 4" 8" 1'-4"
SCALE

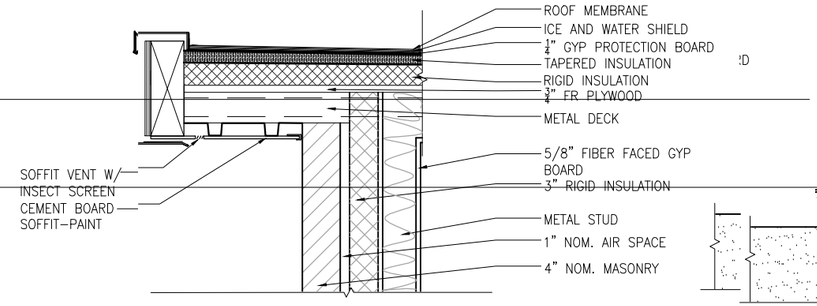

2 ROOF EDGE
SCALE: 3/4"=1'-0"
0 4" 8" 1'-4"
SCALE

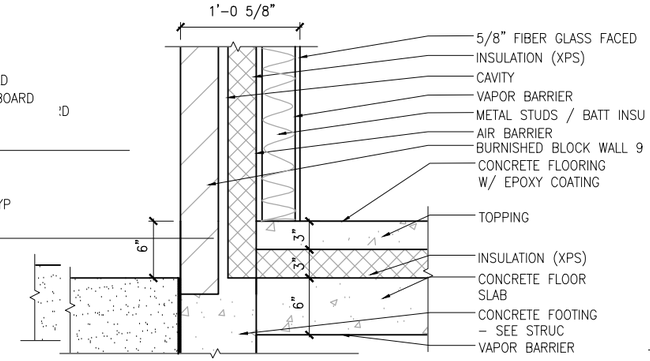

3 WALL-FLOOR EDGE
SCALE: 3/4"=1'-0"
0 4" 8" 1'-4"
SCALE

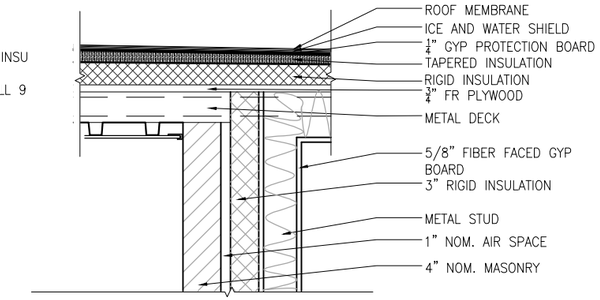

4 WALL-ROOF DETAIL
SCALE: 3/4"=1'-0"
0 4" 8" 1'-4"
SCALE

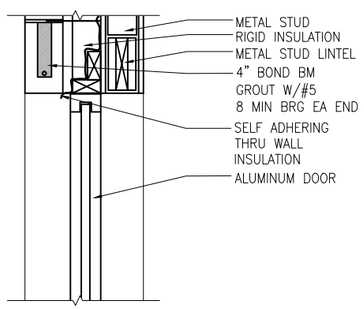

5 DOOR-WALL JOINT
SCALE: 3/4"=1'-0"
0 4" 8" 1'-4"
SCALE

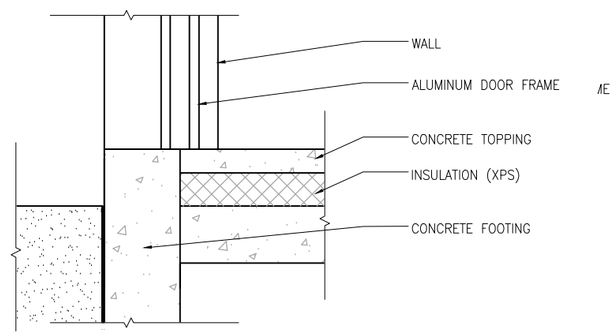

6 DOOR-FLOOR JOINT
SCALE: 3/4"=1'-0"
0 4" 8" 1'-4"
SCALE

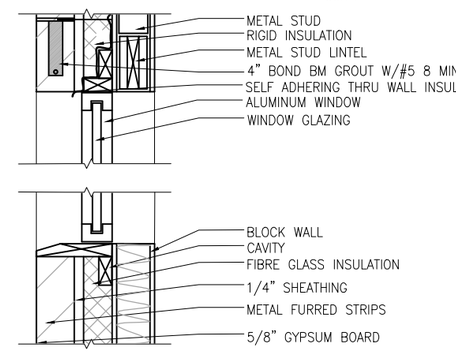

7 WINDOW DETAIL
SCALE: 3/4"=1'-0"
0 4" 8" 1'-4"
SCALE

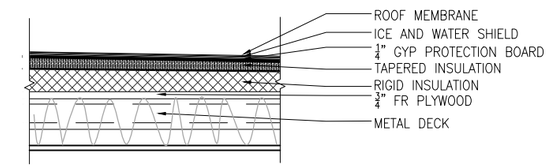

8 ROOF DETAIL
SCALE: 3/4"=1'-0"
0 4" 8" 1'-4"
SCALE

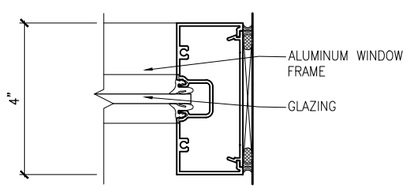

9 WINDOW FRAME DETAIL
SCALE: 3"=1'-0"
0 1" 2" 4"
SCALE

NO.	DATE	BY	CHECK	DESIGN	REVISION / SUBMITTAL

AECOM

90% SUBMISSION - 01/22/16

METROPOLITAN COUNCIL

SOUTHWEST Green Line LRT Extension

CIVIL - VOLUME 11E
BUS OPERATOR RESTROOM
COMMON DETAILS

DISCIPLINE: ARCHITECTURE

SHEET NAME: D0-ARC-DTL-901

SHEET 73 OF 111

Jan, 18 2016 11:47 am V:\3400_ADC\CAD\OVERALL\plan sheets\architecture\D0-ARC-DTL-901.dwg By: v-mccarrtp

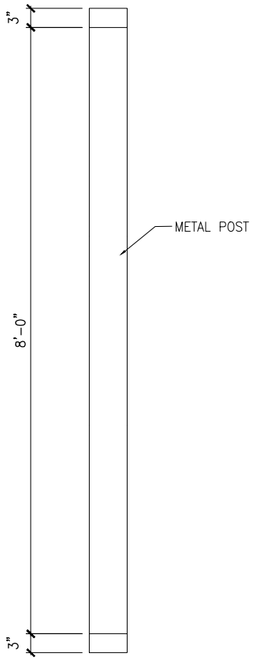

1 PLAN–WAYFINDING SIGNAGE
SCALE: 1/2"=1'-0"
0 6" 1' 2'
SCALE

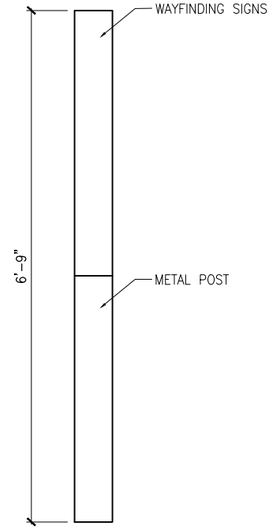

2 ELEV–WAYFINDING SIGNAGE
SCALE: 1/2"=1'-0"
0 6" 1' 2'
SCALE

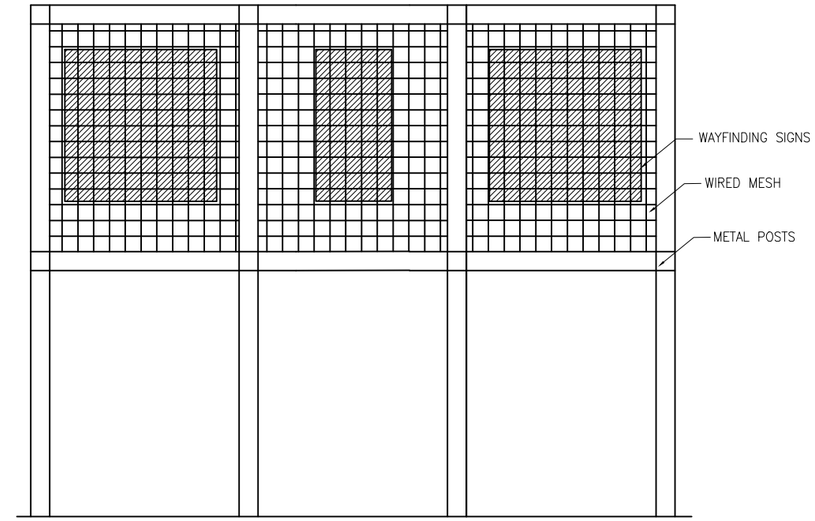

3 ELEV–WAYFINDING SIGNAGE
SCALE: 1/2"=1'-0"
0 6" 1' 2'
SCALE

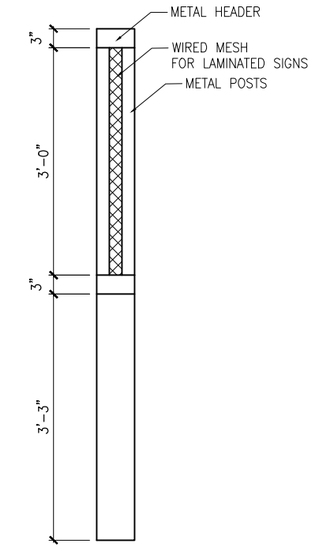

4 SCT – WAYFINDING SIGNAGE
SCALE: 1/2"=1'-0"
0 6" 1' 2'
SCALE

Jan, 18 2016 11:47 am V:\3400_ADC\CAD\OVERALL\plan sheets\architecture\D0-ARC-DTL-902 .dwg By: v-mccarrtp

NO.	DATE	BY	CHECK	DESIGN	REVISION / SUBMITTAL

AECOM

90% SUBMISSION - 01/22/16

METROPOLITAN COUNCIL

SOUTHWEST Green Line LRT Extension

CIVIL - VOLUME 11E
BUS OPERATOR RESTROOM
DOWNTOWN HOPKINS DETAILS

DISCIPLINE: ARCHITECTURE

SHEET NAME: D0-ARC-DTL-902

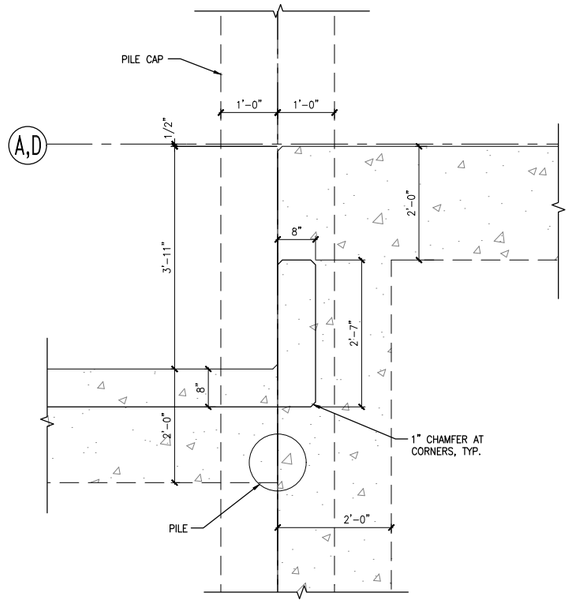

1 DETAIL
SCALE: 3/4"=1'-0"

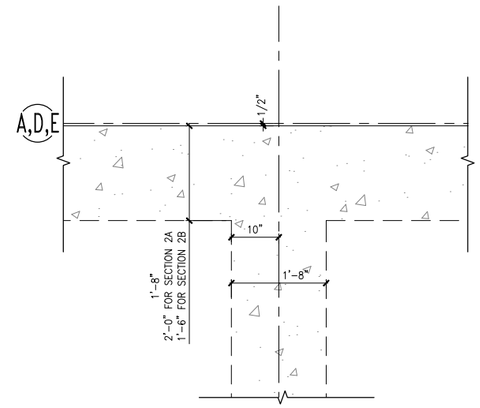

2 DETAIL
SCALE: 3/4"=1'-0"
2A SIMILAR AS NOTED
2B SIMILAR AS NOTED

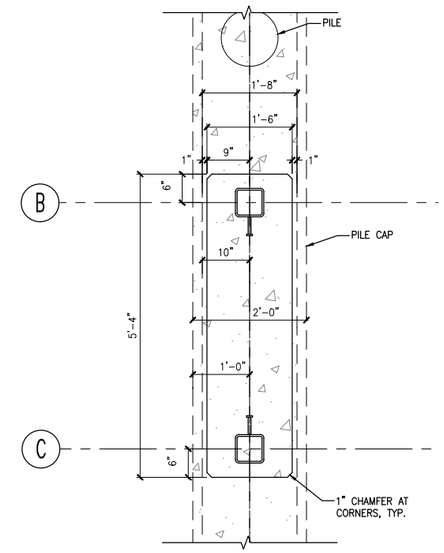

3 DETAIL
SCALE: 3/4"=1'-0"
3A SIMILAR, OMIT PILE CAP & PILE

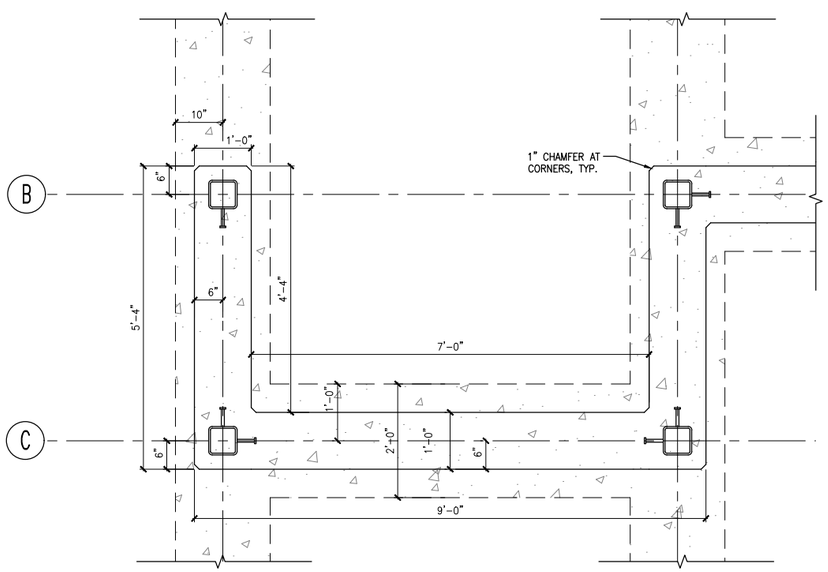

4 DETAIL
SCALE: 3/4"=1'-0"

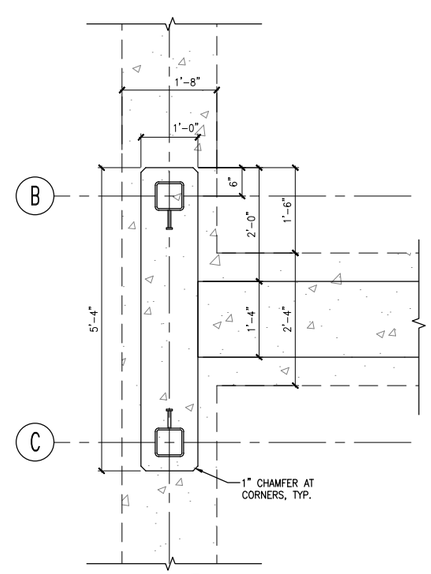

5 DETAIL
SCALE: 3/4"=1'-0"

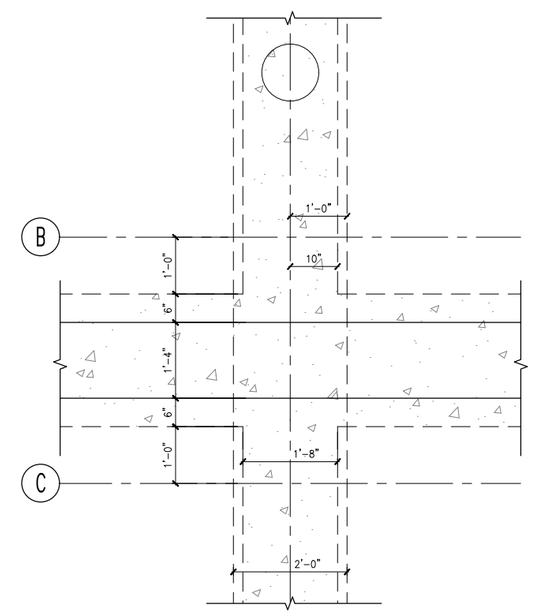

6 DETAIL
SCALE: 3/4"=1'-0"

SHEET NOTES

1. DO NOT SCALE DRAWINGS FOR CONSTRUCTION PURPOSES, USE PLAN INFORMATION, DIMENSIONS DETAILS AND FIELD VERIFICATION.
2. CONTRACTOR SHALL VERIFY ALL DIMENSIONS. ANY DISCREPANCIES BETWEEN DRAWINGS AND FIELD CONDITIONS SHALL BE REPORTED TO THE C.A.R. PRIOR TO PROCEEDING WITH WORK.

NO.	DATE	BY	CHECK	DESIGN	REVISION / SUBMITTAL

AECOM

90% SUBMISSION - 01/22/16

METROPOLITAN COUNCIL

SOUTHWEST Green Line LRT Extension

CIVIL - VOLUME 11E
STATIONS COMMON DETAILS
CONCRETE SECTIONS AND DETAILS

DISCIPLINE: STRUCTURES

SHEET NAME: D0-STR-DTL-401

SHEET 75 OF 111

Jan, 15 2016 10:24 am K:\Projects\Minneapolis_Light_Rail\Station_Structural_Drawings\CAD\OVERALL\PLAN SHEETS\STRUCTURAL DETAILS\D0-STR-DTL-401.dwg By: jordanl

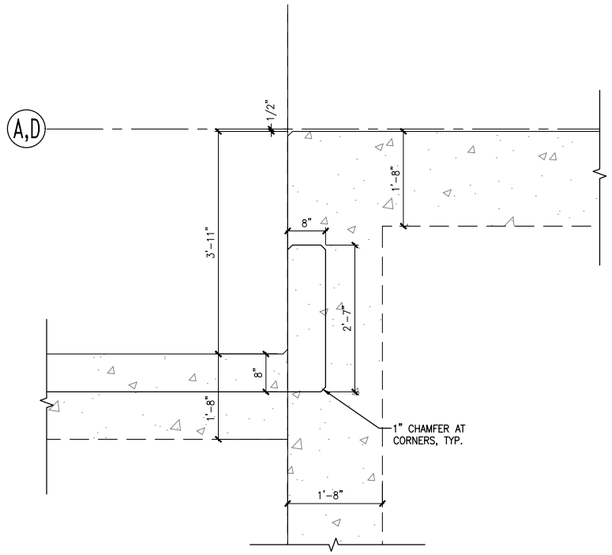

7 DETAIL
SCALE: 3/4"=1'-0"

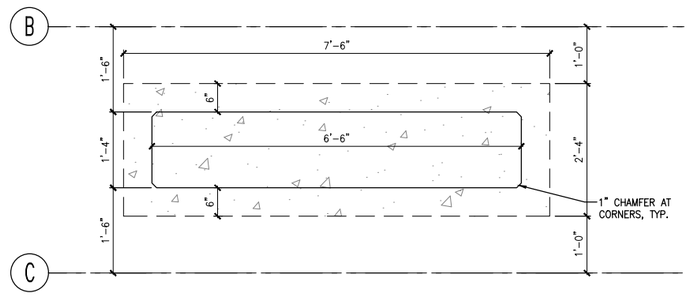

8 DETAIL
SCALE: 3/4"=1'-0"

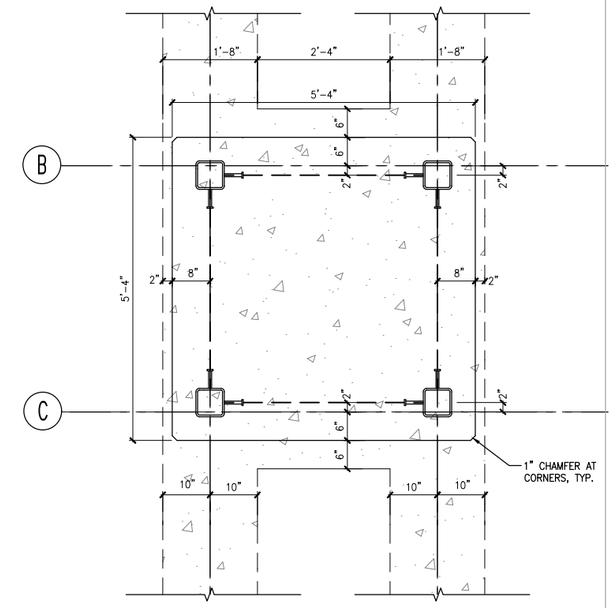

9 DETAIL
SCALE: 3/4"=1'-0"

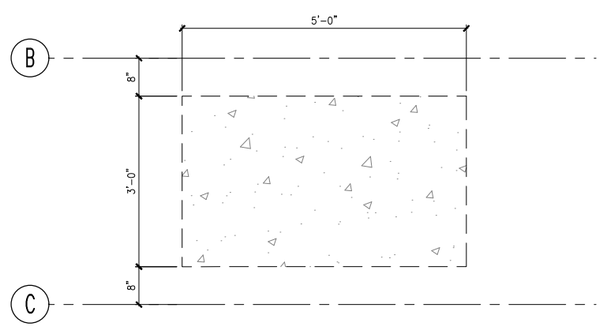

10 DETAIL
SCALE: 3/4"=1'-0"

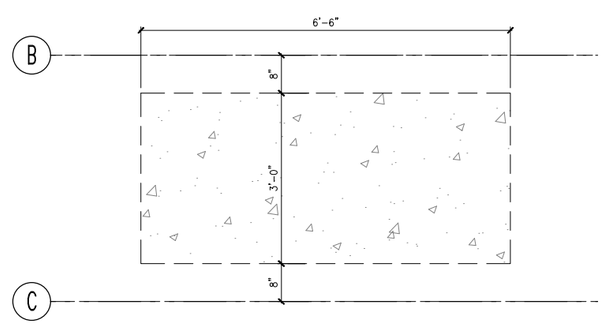

11 DETAIL
SCALE: 3/4"=1'-0"

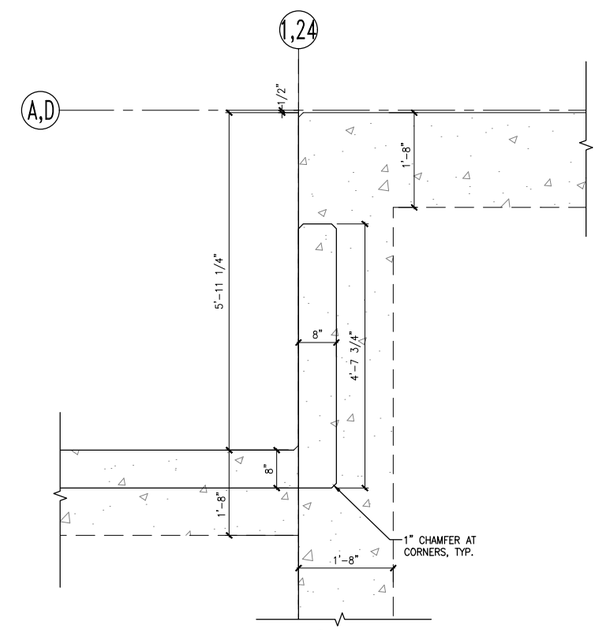

12 DETAIL
SCALE: 3/4"=1'-0"

SHEET NOTES

1. DO NOT SCALE DRAWINGS FOR CONSTRUCTION PURPOSES, USE PLAN INFORMATION, DIMENSIONS DETAILS AND FIELD VERIFICATION.
2. CONTRACTOR SHALL VERIFY ALL DIMENSIONS. ANY DISCREPANCIES BETWEEN DRAWINGS AND FIELD CONDITIONS SHALL BE REPORTED TO THE C.A.R. PRIOR TO PROCEEDING WITH WORK.

NO.	DATE	BY	CHECK	DESIGN	REVISION / SUBMITTAL

AECOM

90% SUBMISSION - 01/22/16

METROPOLITAN COUNCIL

SOUTHWEST Green Line LRT Extension

CIVIL - VOLUME 11E
STATIONS COMMON DETAILS
CONCRETE SECTIONS AND DETAILS

DISCIPLINE: STRUCTURES

SHEET NAME: D0-STR-DTL-402

SHEET 76 OF 111

Jan, 15 2016 10:24 am K:\Projects\Minneapolis_Light_Rail\Station_Structural_Drawings\CAD\OVERALL\PLAN SHEETS\STRUCTURAL DETAILS\D0-STR-DTL-402.dwg By: jordanl

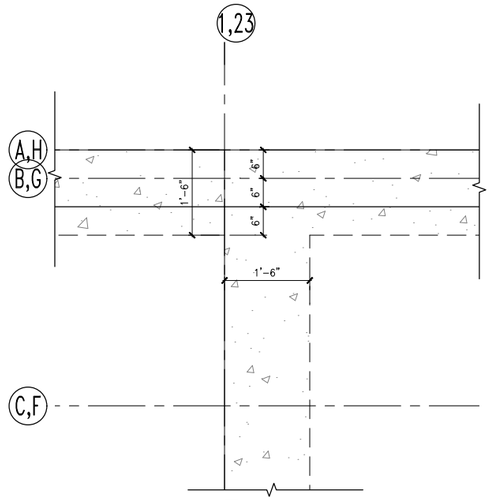

13 DETAIL
SCALE: 3/4"=1'-0"

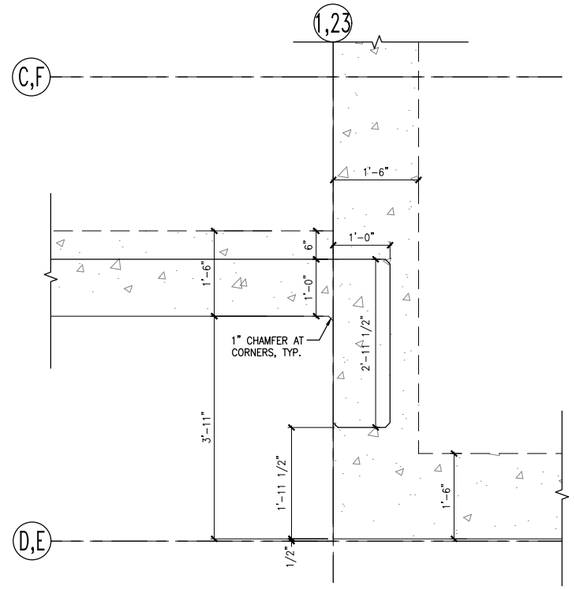

14 DETAIL
SCALE: 3/4"=1'-0"

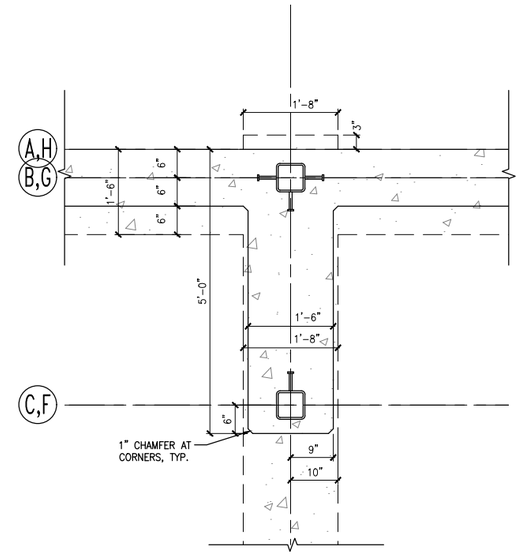

15 DETAIL
SCALE: 3/4"=1'-0"

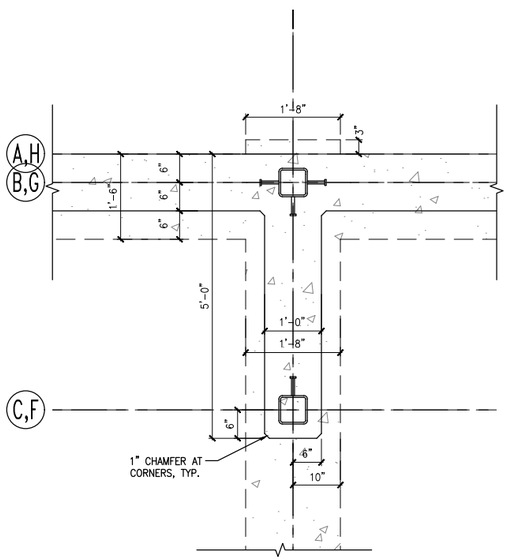

16 DETAIL
SCALE: 3/4"=1'-0"

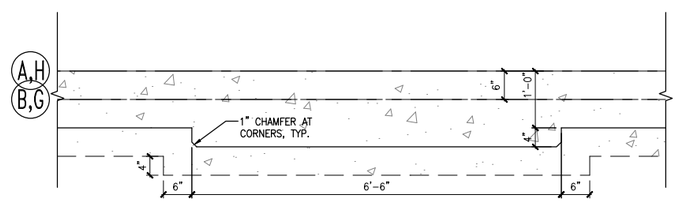

17 DETAIL
SCALE: 3/4"=1'-0"

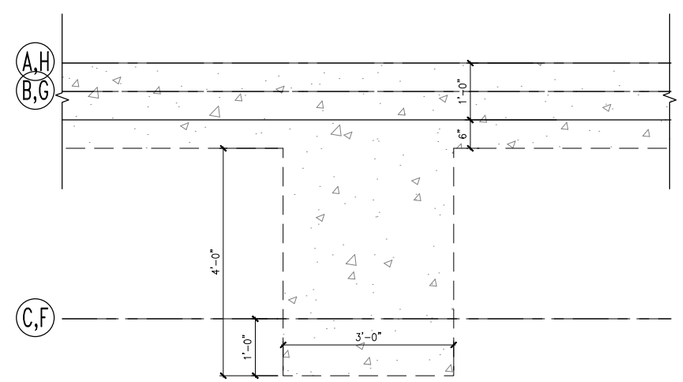

18 DETAIL
SCALE: 3/4"=1'-0"

SHEET NOTES

1. DO NOT SCALE DRAWINGS FOR CONSTRUCTION PURPOSES, USE PLAN INFORMATION, DIMENSIONS DETAILS AND FIELD VERIFICATION.
2. CONTRACTOR SHALL VERIFY ALL DIMENSIONS. ANY DISCREPANCIES BETWEEN DRAWINGS AND FIELD CONDITIONS SHALL BE REPORTED TO THE C.A.R. PRIOR TO PROCEEDING WITH WORK.

NO.	DATE	BY	CHECK	DESIGN	REVISION / SUBMITTAL

AECOM

90% SUBMISSION - 01/22/16

METROPOLITAN COUNCIL

SOUTHWEST Green Line LRT Extension

CIVIL - VOLUME 11E
STATIONS COMMON DETAILS
CONCRETE SECTIONS AND DETAILS

DISCIPLINE: STRUCTURES

SHEET NAME: D0-STR-DTL-403

SHEET 77 OF 111

Jan, 15 2016 10:24 am K:\Projects\Minneapolis_Light_Rail\Station_Structural_Drawings\CAD\OVERALL\PLAN SHEETS\STRUCTURAL DETAILS\D0-STR-DTL-403.dwg By: jordanl

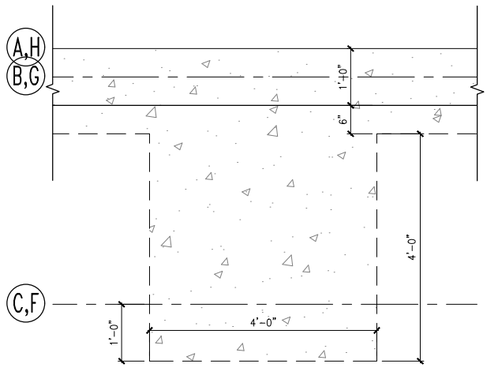

19 DETAIL
SCALE: 3/4"=1'-0"

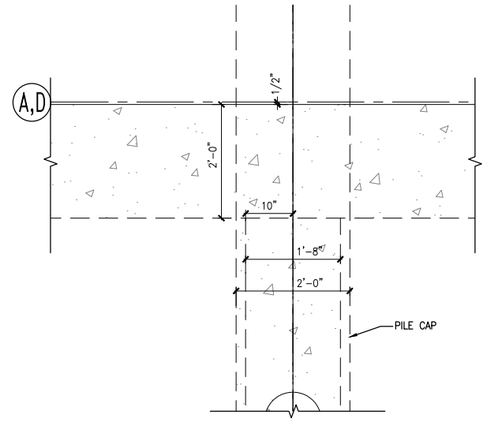

20 DETAIL
SCALE: 3/4"=1'-0"

SHEET NOTES

1. DO NOT SCALE DRAWINGS FOR CONSTRUCTION PURPOSES, USE PLAN INFORMATION, DIMENSIONS DETAILS AND FIELD VERIFICATION.
2. CONTRACTOR SHALL VERIFY ALL DIMENSIONS. ANY DISCREPANCIES BETWEEN DRAWINGS AND FIELD CONDITIONS SHALL BE REPORTED TO THE C.A.R. PRIOR TO PROCEEDING WITH WORK.

NO.	DATE	BY	CHECK	DESIGN	REVISION / SUBMITTAL

AECOM

90% SUBMISSION - 01/22/16

METROPOLITAN COUNCIL

SOUTHWEST Green Line LRT Extension

CIVIL - VOLUME 11E
STATIONS COMMON DETAILS
CONCRETE SECTIONS AND DETAILS

DISCIPLINE: STRUCTURES

SHEET NAME: D0-STR-DTL-404

Jan, 15 2016 10:25 am K:\Projects\Minneapolis_Light_Rail\Station_Structural_Drawings\CAD\OVERALL\PLAN SHEETS\STRUCTURAL DETAILS\D0-STR-DTL-404.dwg By: jordanl

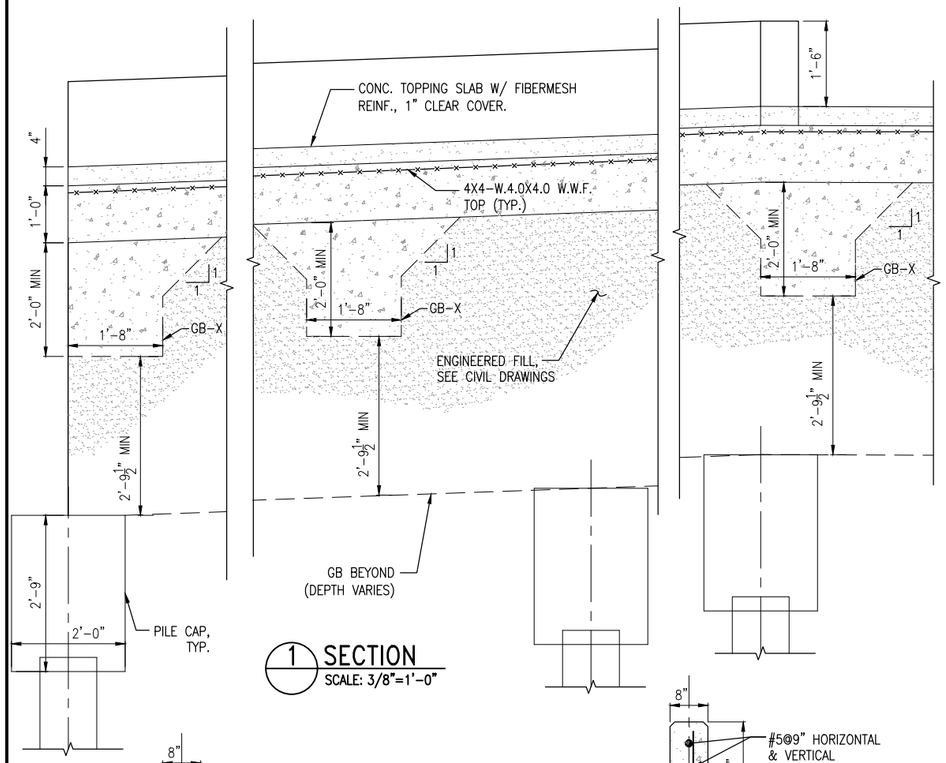

1 SECTION
SCALE: 3/8"=1'-0"

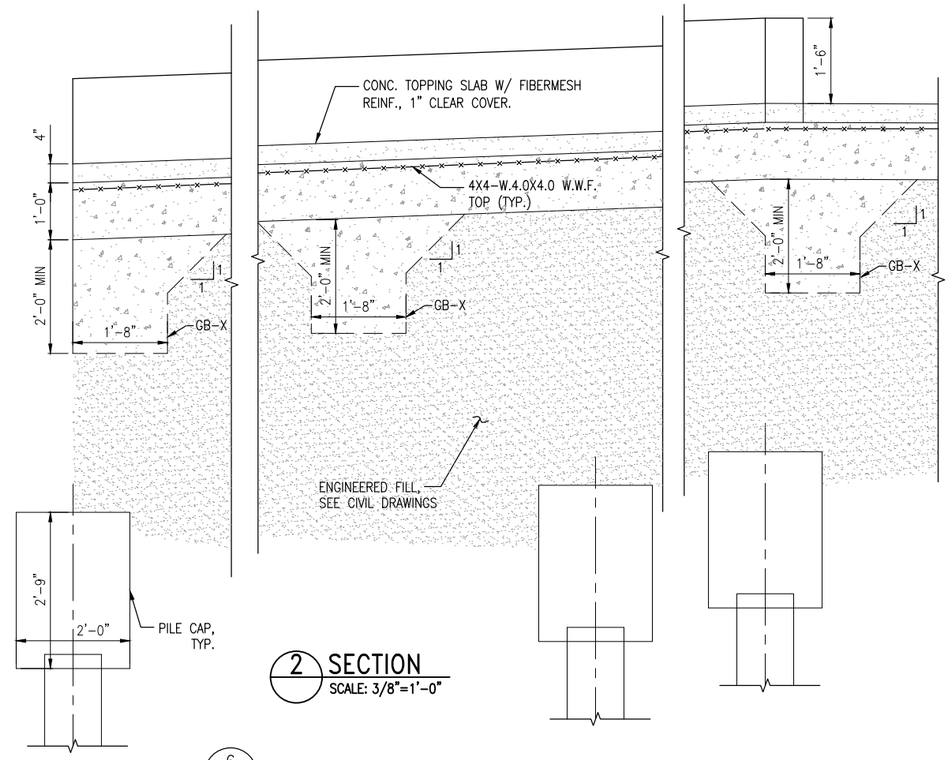

2 SECTION
SCALE: 3/8"=1'-0"

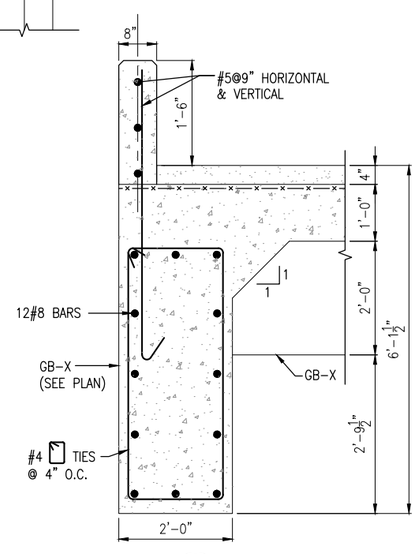

3 SECTION
SCALE: 3/8"=1'-0"

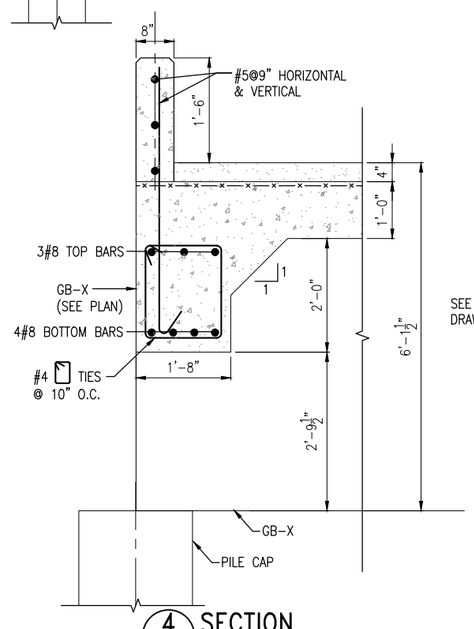

4 SECTION
SCALE: 3/8"=1'-0"

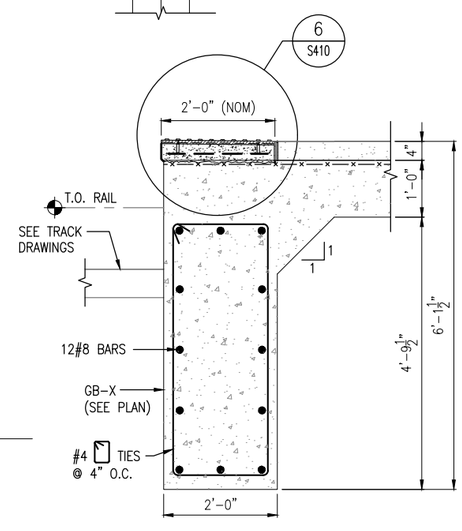

5 SECTION
SCALE: 3/8"=1'-0"

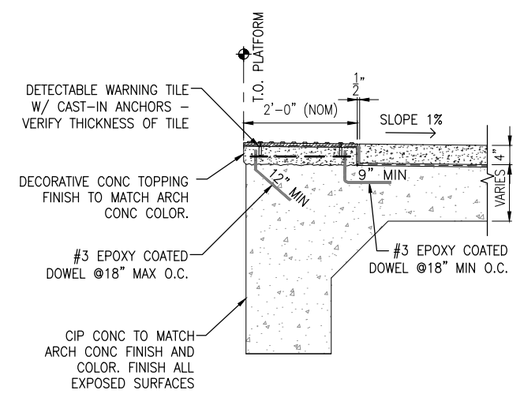

6 SECTION
SCALE: 3/8"=1'-0"

SHEET NOTES

1. DO NOT SCALE DRAWINGS FOR CONSTRUCTION PURPOSES, USE PLAN INFORMATION, DIMENSIONS DETAILS AND FIELD VERIFICATION.
2. CONTRACTOR SHALL VERIFY ALL DIMENSIONS. ANY DISCREPANCIES BETWEEN DRAWINGS AND FIELD CONDITIONS SHALL BE REPORTED TO THE C.A.R. PRIOR TO PROCEEDING WITH WORK.

NO.	DATE	BY	CHECK	DESIGN	REVISION / SUBMITTAL

AECOM

90% SUBMISSION - 01/22/16

METROPOLITAN COUNCIL

SOUTHWEST Green Line LRT Extension

CIVIL - VOLUME 11E
STATIONS COMMON DETAILS
CONCRETE SECTIONS AND DETAILS

DISCIPLINE: STRUCTURES

SHEET NAME: D0-STR-DTL-410

SHEET 79 OF 111

Jan, 15 2016 10:25 am K:\Projects\Minneapolis_Light_Rail\Station_Structural_Drawings\CAD\OVERALL\PLAN SHEETS\STRUCTURAL DETAILS\D0-STR-DTL-410.dwg By: jordanl

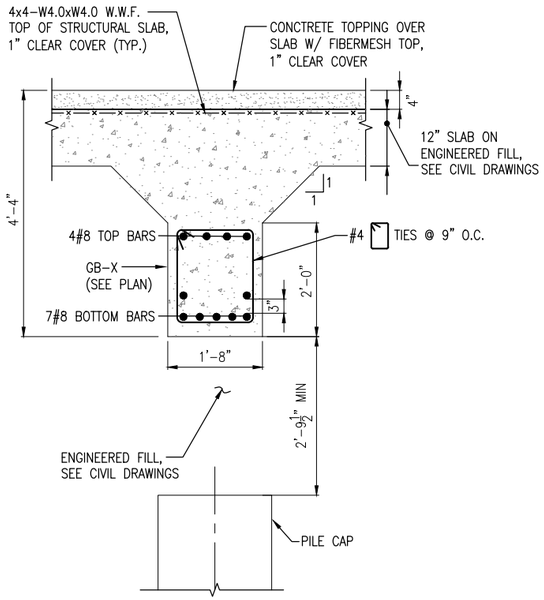

7 SECTION
SCALE: 3/8"=1'-0"
FOR SECTION 7A, OMIT PILE CAP AND PILE

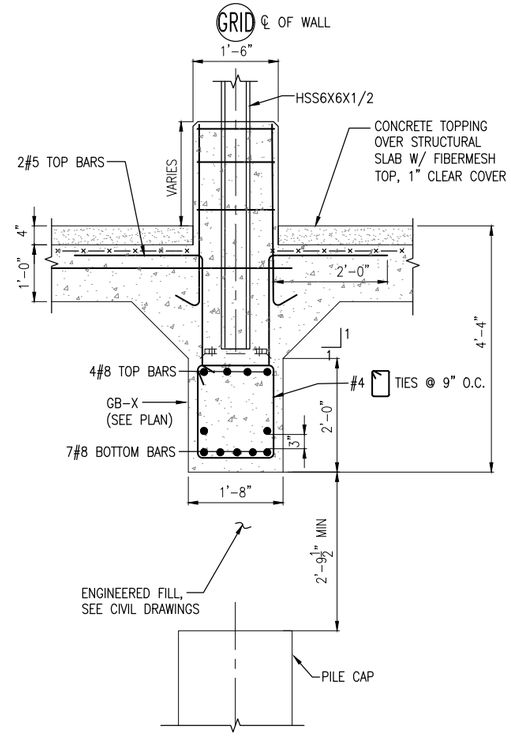

8 SECTION
SCALE: 3/8"=1'-0"

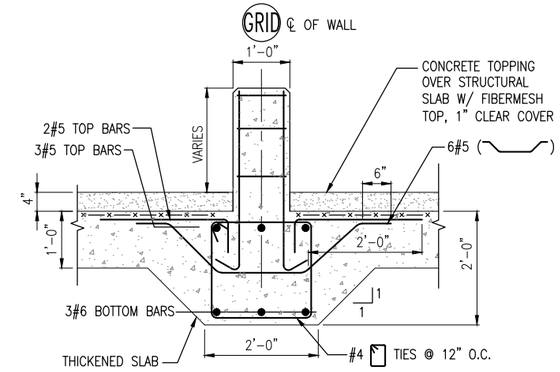

9 SECTION
SCALE: 3/8"=1'-0"

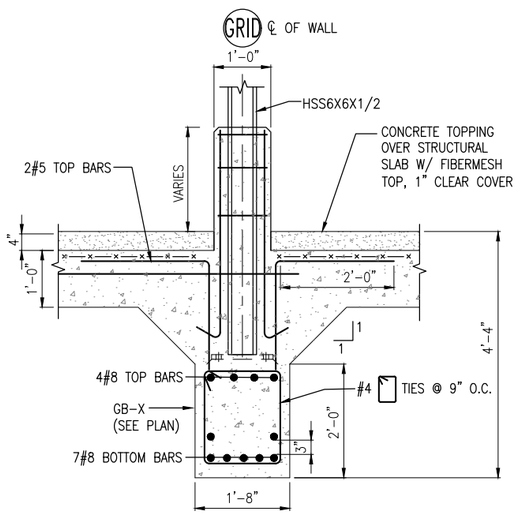

10 SECTION
SCALE: 3/8"=1'-0"

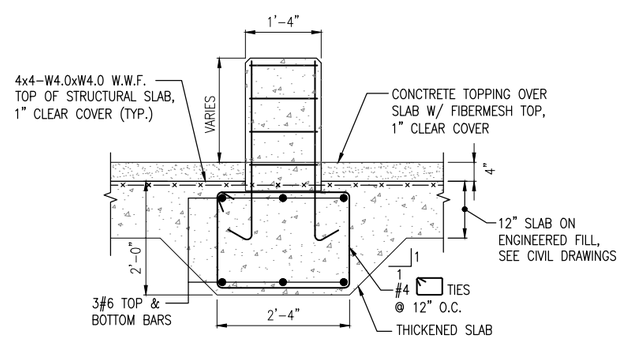

11 SECTION
SCALE: 3/8"=1'-0"

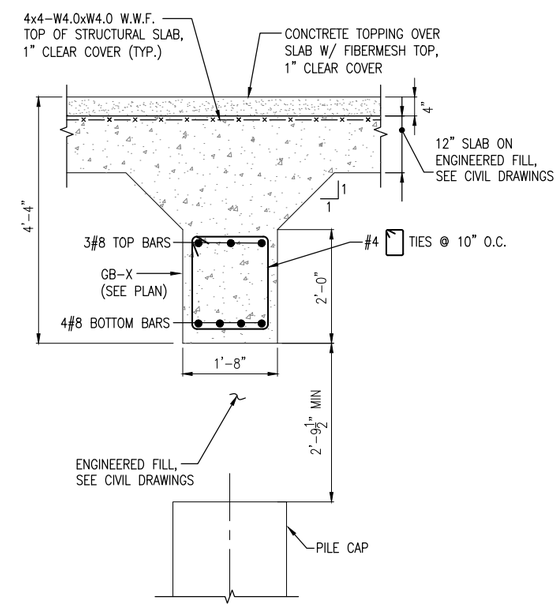

12 SECTION
SCALE: 3/8"=1'-0"
FOR SECTION 12A, OMIT PILE CAP AND PILE

SHEET NOTES

1. DO NOT SCALE DRAWINGS FOR CONSTRUCTION PURPOSES, USE PLAN INFORMATION, DIMENSIONS DETAILS AND FIELD VERIFICATION.
2. CONTRACTOR SHALL VERIFY ALL DIMENSIONS. ANY DISCREPANCIES BETWEEN DRAWINGS AND FIELD CONDITIONS SHALL BE REPORTED TO THE C.A.R. PRIOR TO PROCEEDING WITH WORK.

NO.	DATE	BY	CHECK	DESIGN	REVISION / SUBMITTAL

AECOM

90% SUBMISSION - 01/22/16

METROPOLITAN COUNCIL

SOUTHWEST Green Line LRT Extension

CIVIL - VOLUME 11E
STATIONS COMMON DETAILS
CONCRETE SECTIONS AND DETAILS

DISCIPLINE: STRUCTURES

SHEET NAME: D0-STR-DTL-411

SHEET 80 OF 111

Jan, 15 2016 10:26 am K:\Projects\Minneapolis_Light_Rail\Station_Structural_Drawings\CAD\OVERALL\PLAN SHEETS\STRUCTURAL DETAILS\D0-STR-DTL-411.dwg By: jordanl

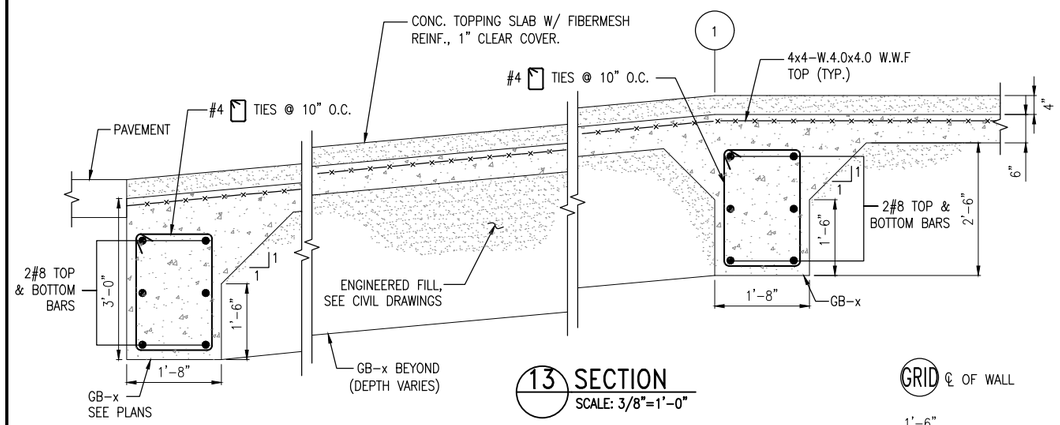

13 SECTION
SCALE: 3/8"=1'-0"

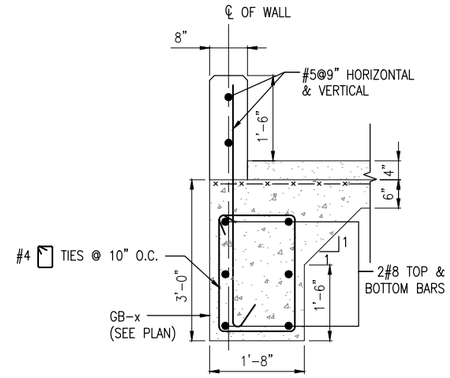

14 SECTION
SCALE: 3/8"=1'-0"

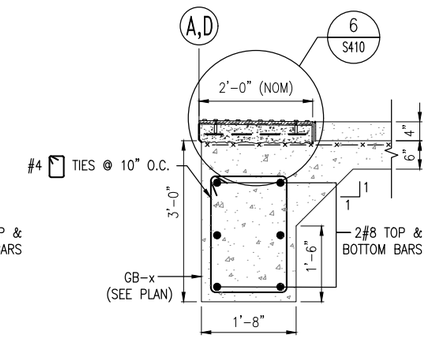

15 SECTION
SCALE: 3/8"=1'-0"

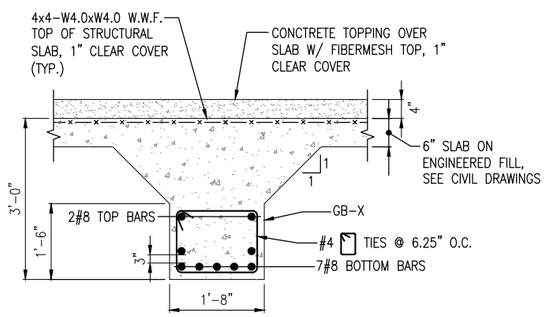

16 SECTION
SCALE: 3/8"=1'-0"

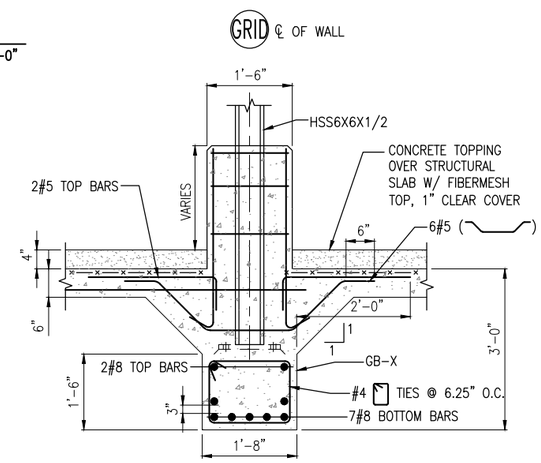

17 SECTION
SCALE: 3/8"=1'-0"

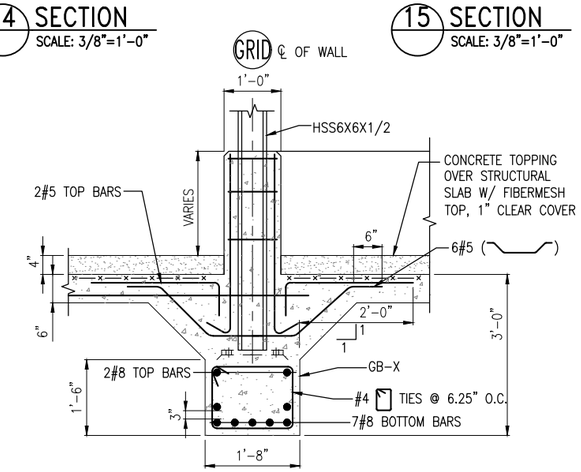

18 SECTION
SCALE: 3/8"=1'-0"

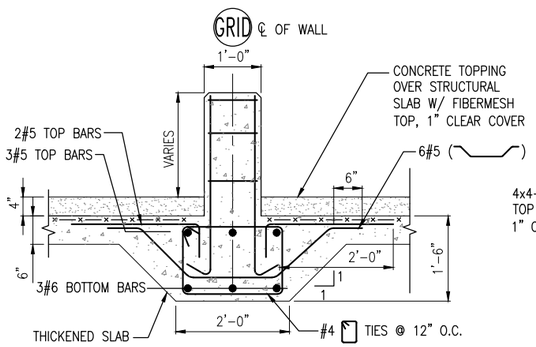

19 SECTION
SCALE: 3/8"=1'-0"

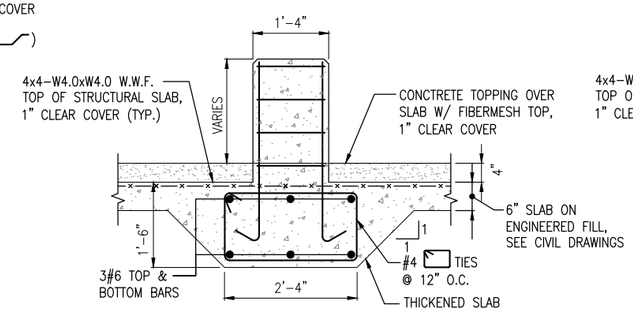

20 SECTION
SCALE: 3/8"=1'-0"

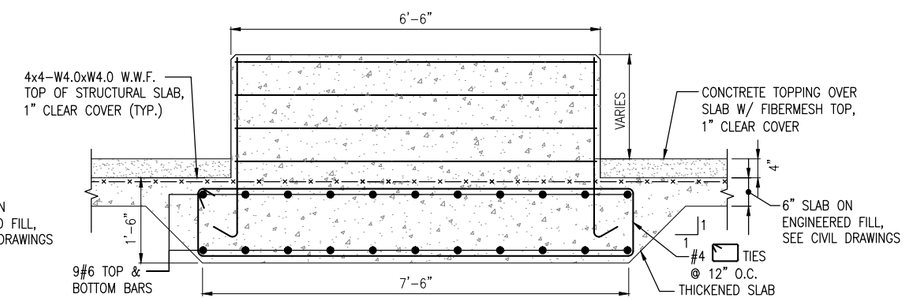

21 SECTION
SCALE: 3/8"=1'-0"

SHEET NOTES

1. DO NOT SCALE DRAWINGS FOR CONSTRUCTION PURPOSES, USE PLAN INFORMATION, DIMENSIONS DETAILS AND FIELD VERIFICATION.
2. CONTRACTOR SHALL VERIFY ALL DIMENSIONS. ANY DISCREPANCIES BETWEEN DRAWINGS AND FIELD CONDITIONS SHALL BE REPORTED TO THE C.A.R. PRIOR TO PROCEEDING WITH WORK.

NO.	DATE	BY	CHECK	DESIGN	REVISION / SUBMITTAL

AECOM

90% SUBMISSION - 01/22/16

METROPOLITAN COUNCIL

SOUTHWEST Green Line LRT Extension

CIVIL - VOLUME 11E
STATIONS COMMON DETAILS
CONCRETE SECTIONS AND DETAILS

DISCIPLINE: STRUCTURES

SHEET NAME: D0-STR-DTL-412

SHEET 81 OF 111

Jan, 15 2016 10:26 am K:\Projects\Minneapolis_Light_Rail\Station_Structural_Drawings\CAD\OVERALL\PLAN SHEETS\STRUCTURAL DETAILS\D0-STR-DTL-412.dwg By: jordanl

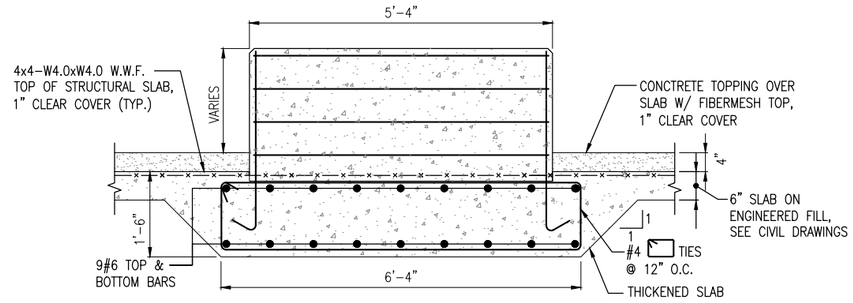

22 SECTION
SCALE: 3/8"=1'-0"

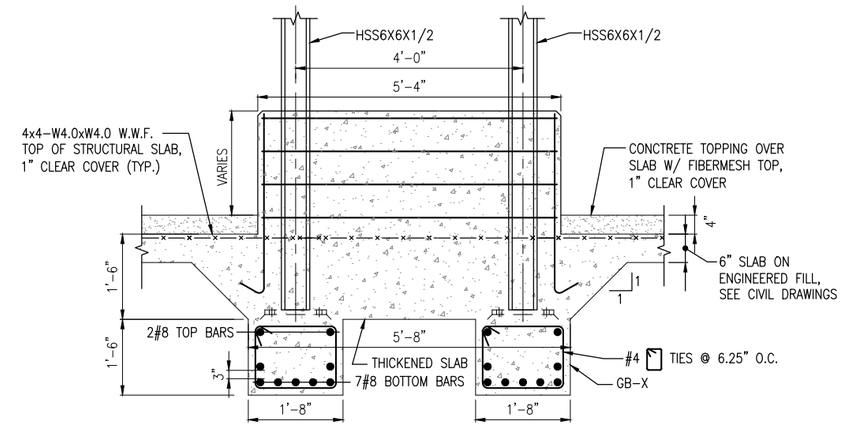

23 SECTION
SCALE: 3/8"=1'-0"

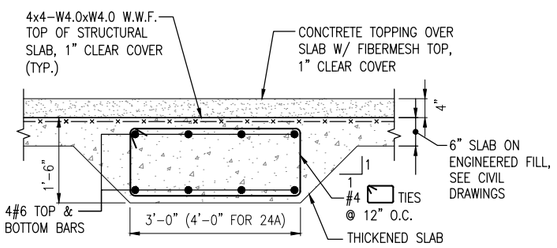

24 SECTION
SCALE: 3/8"=1'-0"

SECTION 24A SIMILAR, AS NOTED

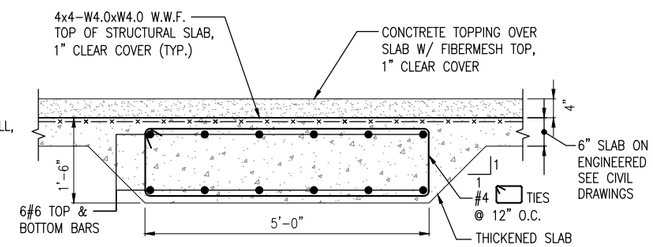

25 SECTION
SCALE: 3/8"=1'-0"

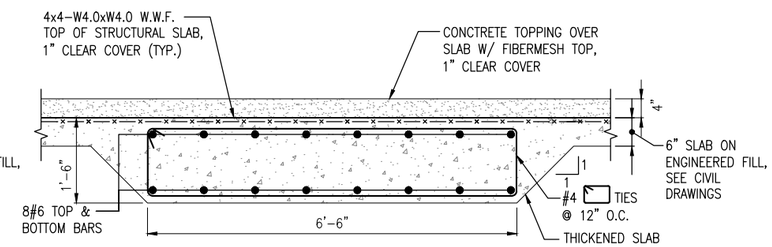

26 SECTION
SCALE: 3/8"=1'-0"

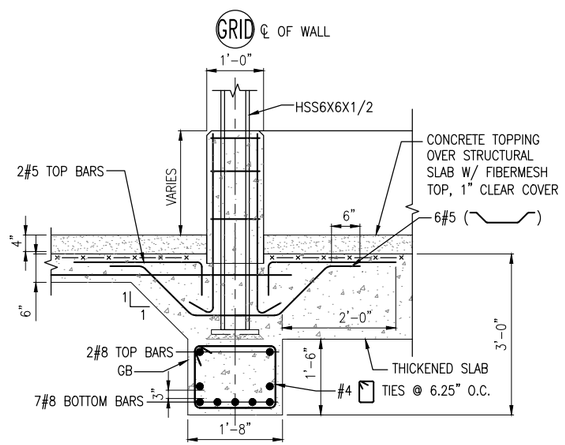

27 SECTION
SCALE: 3/8"=1'-0"

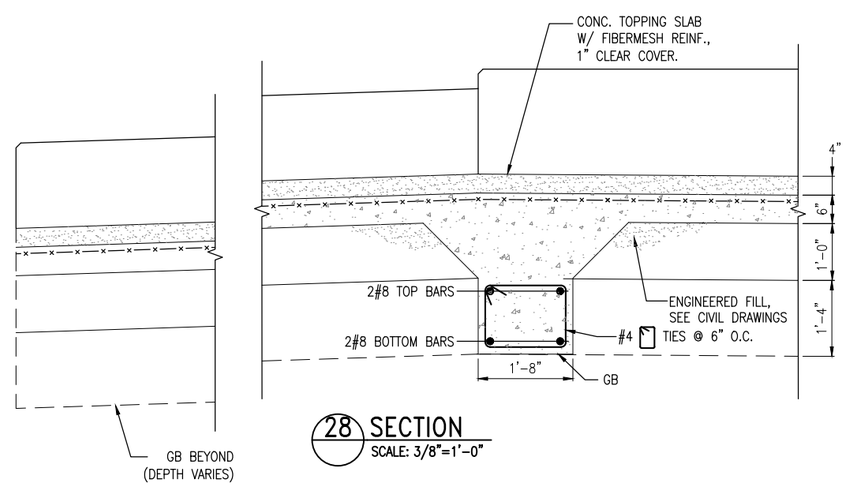

28 SECTION
SCALE: 3/8"=1'-0"

SHEET NOTES

1. DO NOT SCALE DRAWINGS FOR CONSTRUCTION PURPOSES, USE PLAN INFORMATION, DIMENSIONS DETAILS AND FIELD VERIFICATION.
2. CONTRACTOR SHALL VERIFY ALL DIMENSIONS. ANY DISCREPANCIES BETWEEN DRAWINGS AND FIELD CONDITIONS SHALL BE REPORTED TO THE C.A.R. PRIOR TO PROCEEDING WITH WORK.

NO.	DATE	BY	CHECK	DESIGN	REVISION / SUBMITTAL

AECOM

90% SUBMISSION - 01/22/16

METROPOLITAN COUNCIL

SOUTHWEST Green Line LRT Extension

CIVIL - VOLUME 11E
STATIONS COMMON DETAILS
CONCRETE SECTIONS AND DETAILS

DISCIPLINE: STRUCTURES

SHEET NAME: D0-STR-DTL-413

SHEET 82 OF 111

Jan, 15 2016 10:26 am K:\Projects\Minneapolis_Light_Rail\Station_Structural_Drawings\CAD\OVERALL\PLAN SHEETS\STRUCTURAL DETAILS\D0-STR-DTL-413.dwg By: jordanl

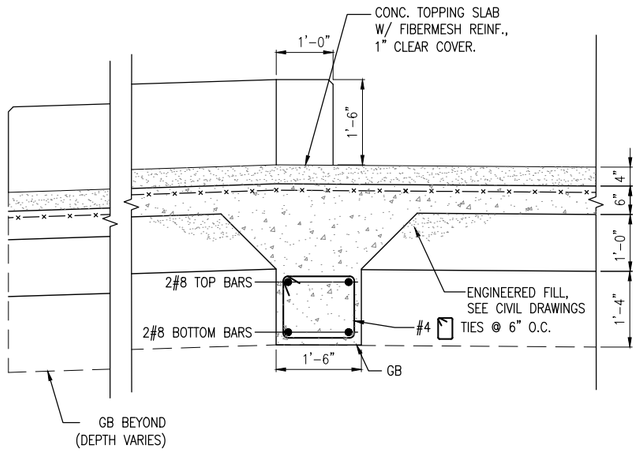

29 SECTION
SCALE: 3/8"=1'-0"

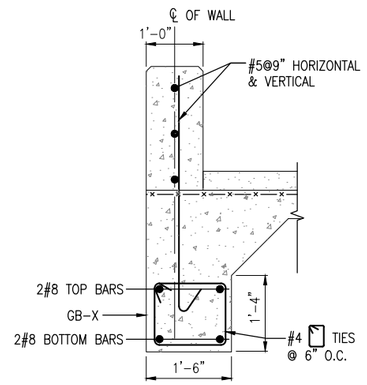

30 SECTION
SCALE: 3/8"=1'-0"

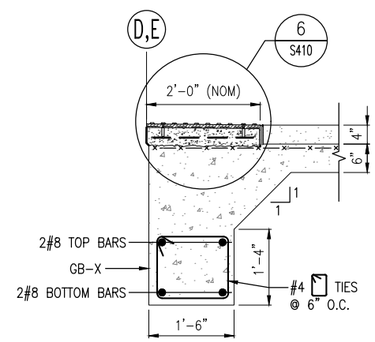

31 SECTION
SCALE: 3/8"=1'-0"

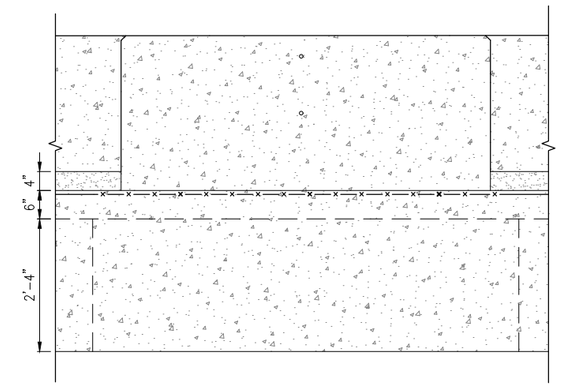

32 SECTION
SCALE: 3/8"=1'-0"

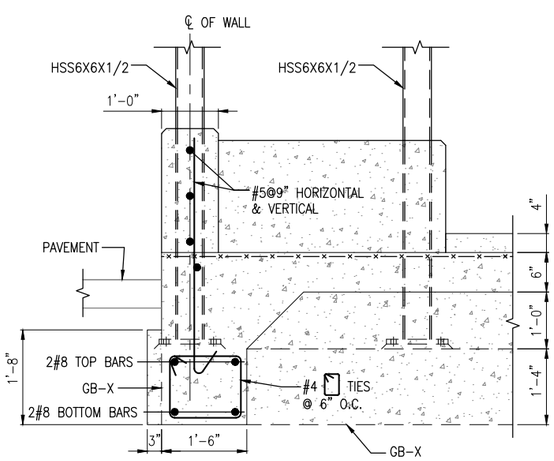

33 SECTION
SCALE: 3/8"=1'-0"

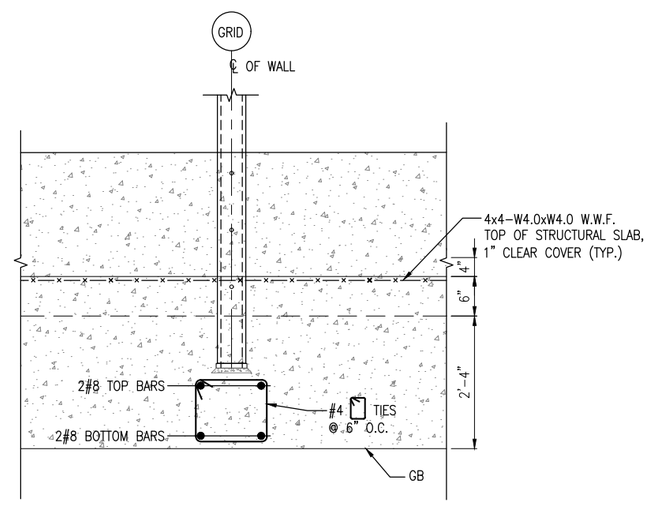

34 SECTION
SCALE: 3/8"=1'-0"

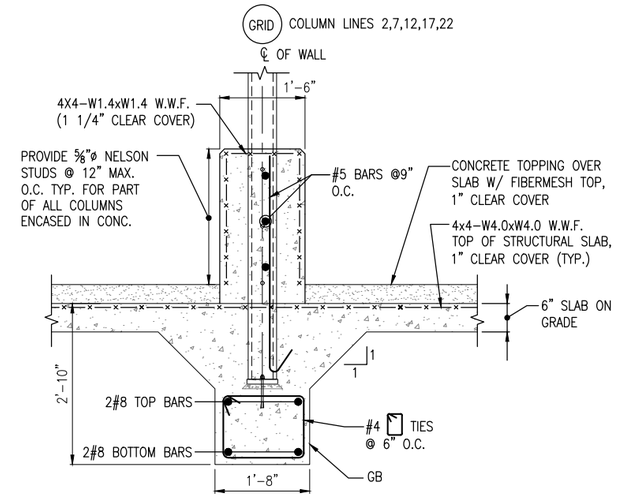

35 SECTION
SCALE: 3/8"=1'-0"

SHEET NOTES

1. DO NOT SCALE DRAWINGS FOR CONSTRUCTION PURPOSES, USE PLAN INFORMATION, DIMENSIONS DETAILS AND FIELD VERIFICATION.
2. CONTRACTOR SHALL VERIFY ALL DIMENSIONS. ANY DISCREPANCIES BETWEEN DRAWINGS AND FIELD CONDITIONS SHALL BE REPORTED TO THE C.A.R. PRIOR TO PROCEEDING WITH WORK.

NO.	DATE	BY	CHECK	DESIGN	REVISION / SUBMITTAL

AECOM

90% SUBMISSION - 01/22/16

METROPOLITAN COUNCIL

SOUTHWEST Green Line LRT Extension

CIVIL - VOLUME 11E
STATIONS COMMON DETAILS
CONCRETE SECTIONS AND DETAILS

DISCIPLINE: STRUCTURES

SHEET NAME: D0-STR-DTL-414

SHEET 83 OF 111

Jan, 15 2016 10:27 am K:\Projects\Minneapolis_Light_Rail\Station_Structural_Drawings\CAD\OVERALL\PLAN SHEETS\STRUCTURAL DETAILS\D0-STR-DTL-414.dwg By: jordanl

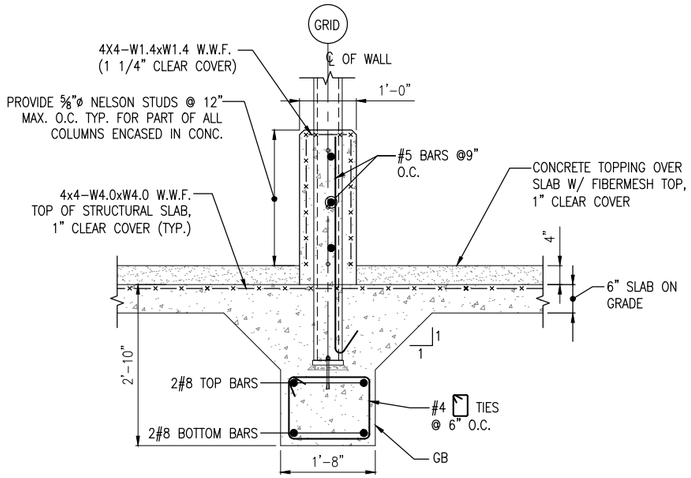

36 SECTION
SCALE: 3/8"=1'–0"

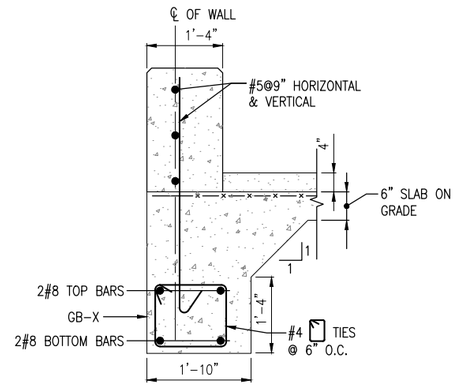

37 SECTION
SCALE: 3/8"=1'–0"

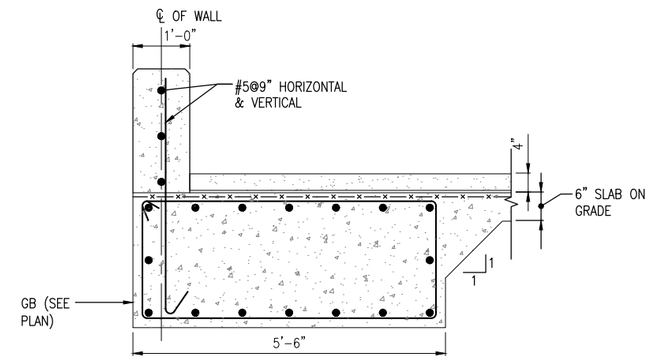

38 SECTION
SCALE: 3/8"=1'–0"

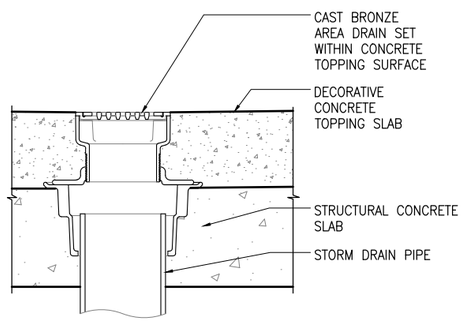

39 SECTION
SCALE: 1 1/2"=1'–0"

SHEET NOTES

1. DO NOT SCALE DRAWINGS FOR CONSTRUCTION PURPOSES, USE PLAN INFORMATION, DIMENSIONS DETAILS AND FIELD VERIFICATION.
2. CONTRACTOR SHALL VERIFY ALL DIMENSIONS. ANY DISCREPANCIES BETWEEN DRAWINGS AND FIELD CONDITIONS SHALL BE REPORTED TO THE C.A.R. PRIOR TO PROCEEDING WITH WORK.

NO.	DATE	BY	CHECK	DESIGN	REVISION / SUBMITTAL

AECOM

90% SUBMISSION - 01/22/16

METROPOLITAN COUNCIL

SOUTHWEST Green Line LRT Extension

CIVIL - VOLUME 11E
STATIONS COMMON DETAILS
CONCRETE SECTIONS AND DETAILS

DISCIPLINE: STRUCTURES

SHEET NAME: D0-STR-DTL-415

SHEET 84 OF 111

Jan, 15 2016 10:27 am K:\Projects\Minneapolis_Light_Rail\Station_Structural_Drawings\CAD\OVERALL\PLAN SHEETS\STRUCTURAL DETAILS\D0-STR-DTL-415.dwg By: jordanl

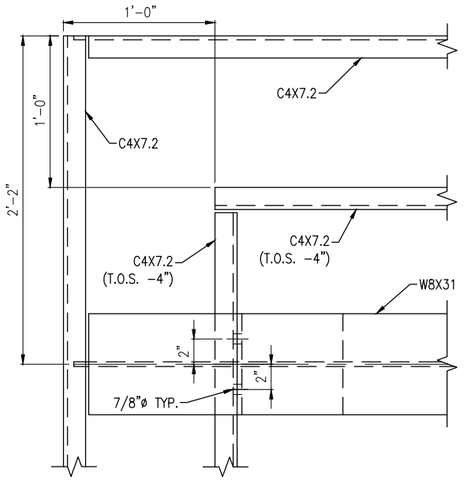

1 DETAIL
SCALE: 1"=1'-0"

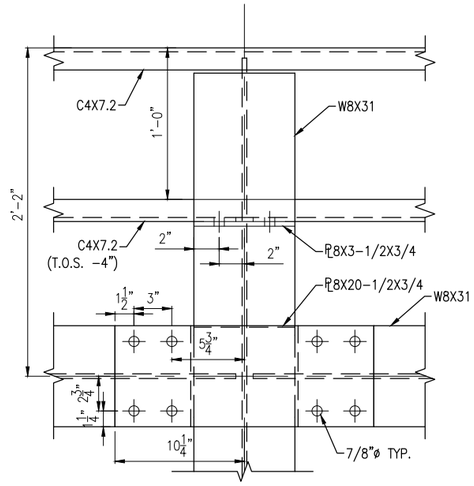

2 DETAIL
SCALE: 1"=1'-0"

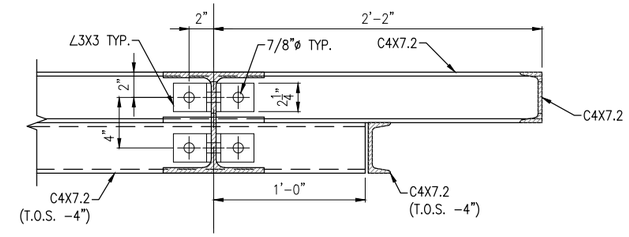

3 SECTION
SCALE: 1"=1'-0"

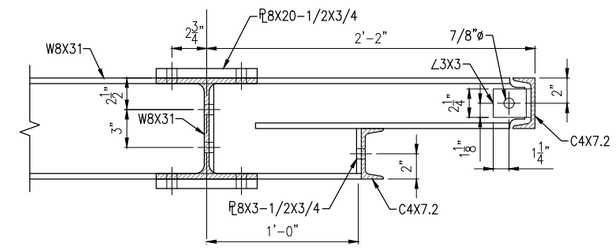

4 SECTION
SCALE: 1"=1'-0"

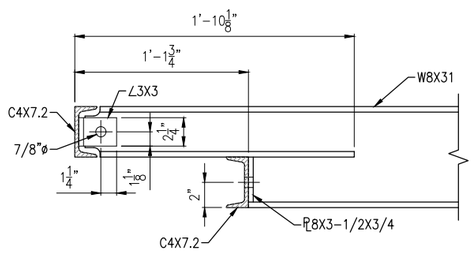

5 SECTION
SCALE: 1"=1'-0"

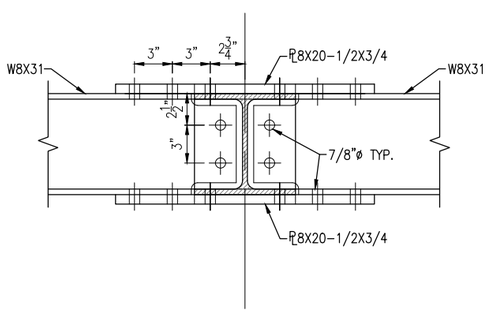

6 SECTION
SCALE: 1"=1'-0"

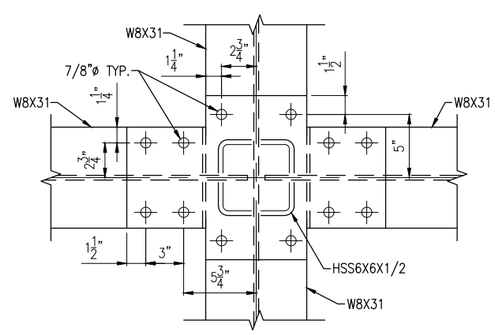

7 DETAIL
SCALE: 1"=1'-0"

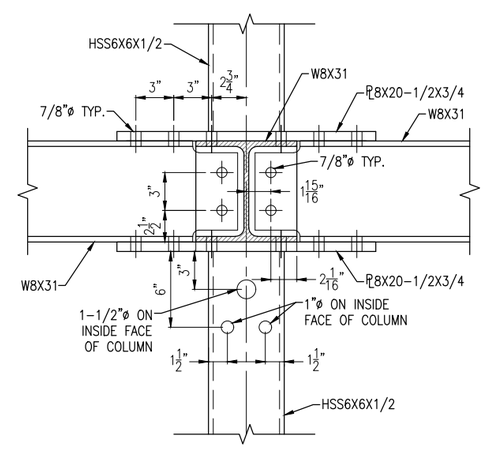

8 SECTION
SCALE: 1"=1'-0"
FOR SECTION 8A, OMIT HOLES FOR CONDUIT

SHEET NOTES

1. DO NOT SCALE DRAWINGS FOR CONSTRUCTION PURPOSES, USE PLAN INFORMATION, DIMENSIONS DETAILS AND FIELD VERIFICATION.
2. CONTRACTOR SHALL VERIFY ALL DIMENSIONS. ANY DISCREPANCIES BETWEEN DRAWINGS AND FIELD CONDITIONS SHALL BE REPORTED TO THE C.A.R. PRIOR TO PROCEEDING WITH WORK.

NO.	DATE	BY	CHECK	DESIGN	REVISION / SUBMITTAL

AECOM

90% SUBMISSION - 01/22/16

METROPOLITAN COUNCIL

SOUTHWEST Green Line LRT Extension

CIVIL - VOLUME 11E
STATIONS COMMON DETAILS
STEEL SECTIONS AND DETAILS

DISCIPLINE: STRUCTURES

SHEET NAME: D0-STR-DTL-500

SHEET 85 OF 111

Jan, 15 2016 10:27 am K:\Projects\Minneapolis_Light_Rail\Station_Structural_Drawings\CAD\OVERALL\PLAN SHEETS\STRUCTURAL DETAILS\D0-STR-DTL-500.dwg By: jordanl

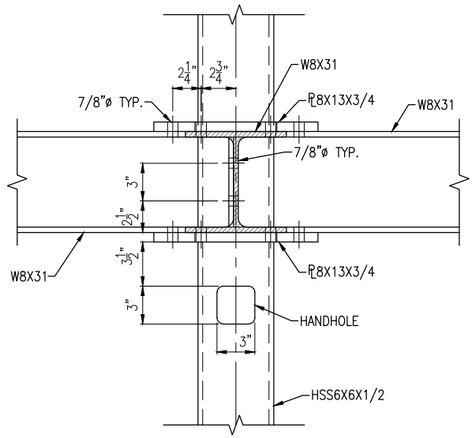

9 SECTION
SCALE: 1"=1'-0"

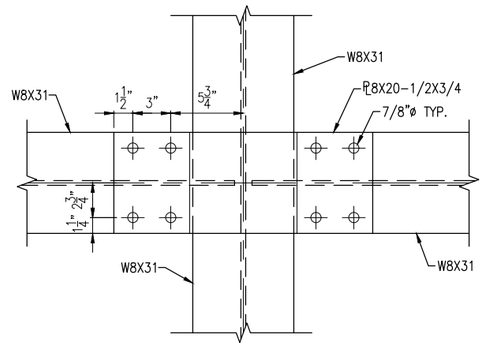

10 DETAIL
SCALE: 1"=1'-0"

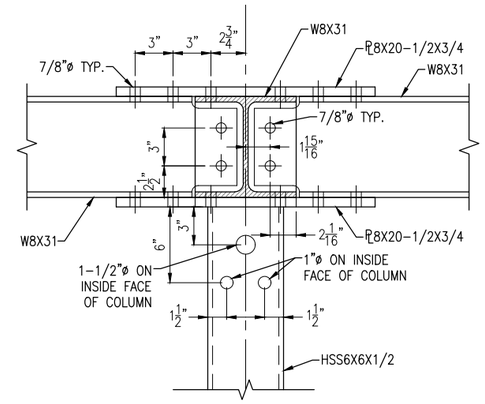

11 SECTION
SCALE: 1"=1'-0"
FOR SECTION 11A, OMIT HOLES FOR CONDUIT

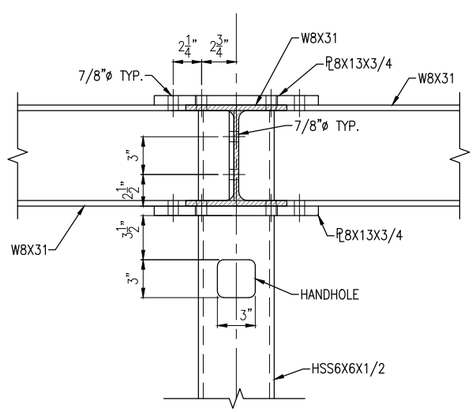

12 SECTION
SCALE: 1"=1'-0"
FOR SECTION 12A, OMIT HANDHOLE

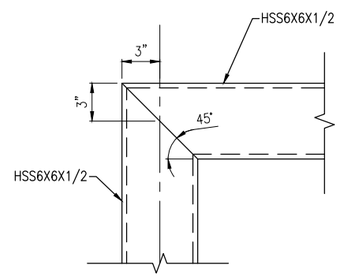

13 SECTION
SCALE: 1"=1'-0"

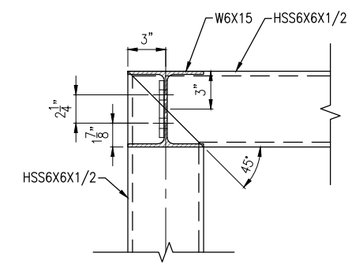

14 SECTION
SCALE: 1"=1'-0"

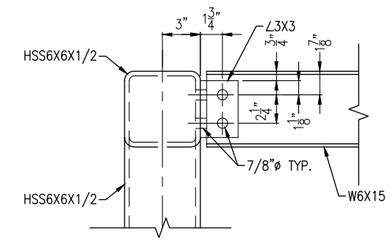

15 SECTION
SCALE: 1"=1'-0"

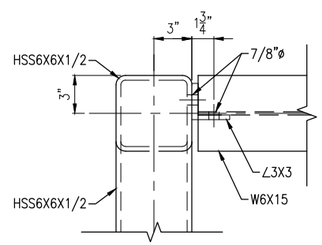

16 SECTION
SCALE: 1"=1'-0"

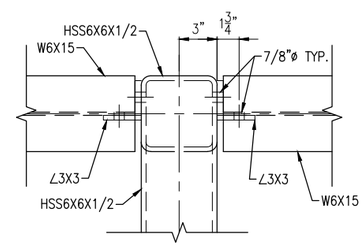

17 SECTION
SCALE: 1"=1'-0"

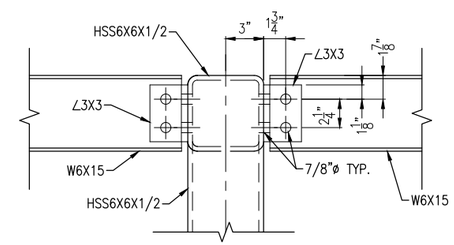

18 SECTION
SCALE: 1"=1'-0"

SHEET NOTES

1. DO NOT SCALE DRAWINGS FOR CONSTRUCTION PURPOSES, USE PLAN INFORMATION, DIMENSIONS DETAILS AND FIELD VERIFICATION.
2. CONTRACTOR SHALL VERIFY ALL DIMENSIONS. ANY DISCREPANCIES BETWEEN DRAWINGS AND FIELD CONDITIONS SHALL BE REPORTED TO THE C.A.R. PRIOR TO PROCEEDING WITH WORK.

NO.	DATE	BY	CHECK	DESIGN	REVISION / SUBMITTAL

AECOM

90% SUBMISSION - 01/22/16

METROPOLITAN COUNCIL

SOUTHWEST Green Line LRT Extension

CIVIL - VOLUME 11E
STATIONS COMMON DETAILS
STEEL SECTIONS AND DETAILS

DISCIPLINE: STRUCTURES

SHEET NAME: D0-STR-DTL-501

SHEET 86 OF 111

Jan, 15 2016 10:27 am K:\Projects\Minneapolis_Light_Rail\Station_Structural_Drawings\CAD\OVERALL\PLAN SHEETS\STRUCTURAL DETAILS\D0-STR-DTL-501.dwg By: jordanl

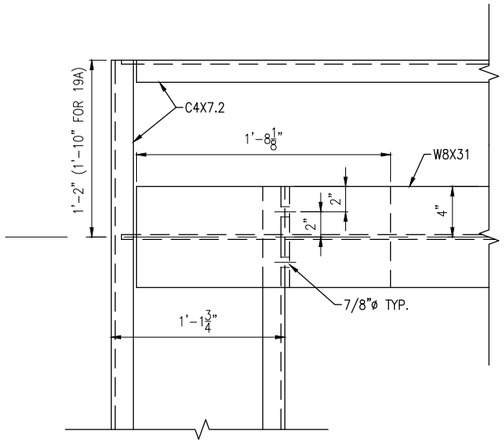

19 DETAIL
SCALE: 1"=1'-0"
19A SIMILAR, AS NOTED

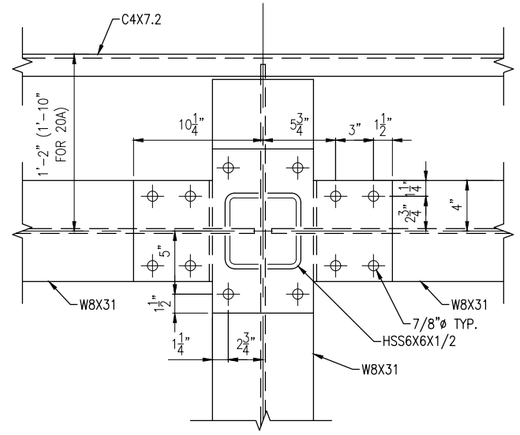

20 DETAIL
SCALE: 1"=1'-0"
20A SIMILAR, AS NOTED

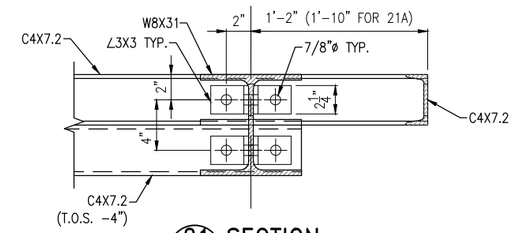

21 SECTION
SCALE: 1"=1'-0"
21A SIMILAR, AS NOTED

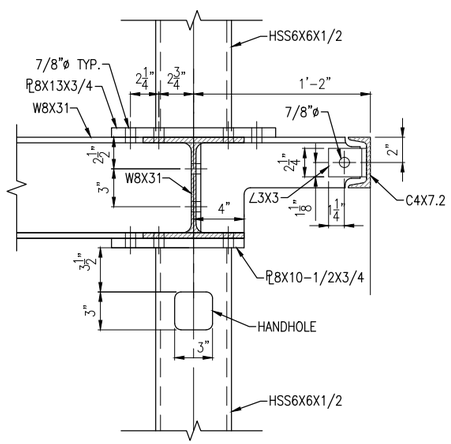

22 SECTION
SCALE: 1"=1'-0"
FOR SECTION 22A, OMIT HANDHOLE

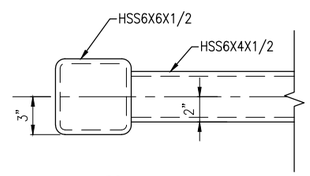

23 DETAIL
SCALE: 1"=1'-0"

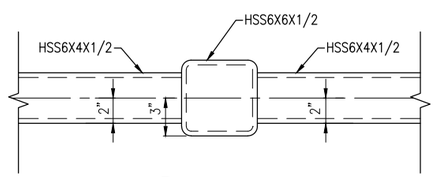

24 DETAIL
SCALE: 1"=1'-0"

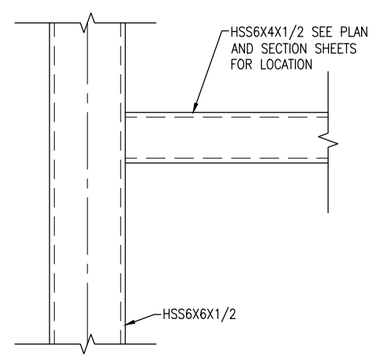

25 SECTION
SCALE: 1"=1'-0"

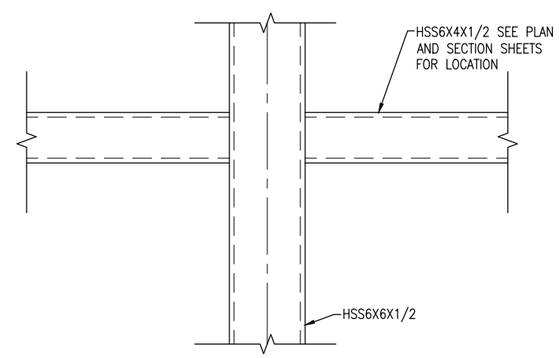

26 SECTION
SCALE: 1"=1'-0"

SHEET NOTES

1. DO NOT SCALE DRAWINGS FOR CONSTRUCTION PURPOSES, USE PLAN INFORMATION, DIMENSIONS DETAILS AND FIELD VERIFICATION.
2. CONTRACTOR SHALL VERIFY ALL DIMENSIONS. ANY DISCREPANCIES BETWEEN DRAWINGS AND FIELD CONDITIONS SHALL BE REPORTED TO THE C.A.R. PRIOR TO PROCEEDING WITH WORK.

NO.	DATE	BY	CHECK	DESIGN	REVISION / SUBMITTAL

AECOM

90% SUBMISSION - 01/22/16

METROPOLITAN COUNCIL

SOUTHWEST Green Line LRT Extension

CIVIL - VOLUME 11E
STATIONS COMMON DETAILS
STEEL SECTIONS AND DETAILS

DISCIPLINE: STRUCTURES

SHEET NAME: D0-STR-DTL-502

SHEET 87 OF 111

Jan, 15 2016 10:28 am K:\Projects\Minneapolis_Light_Rail\Station_Structural_Drawings\CAD\OVERALL\PLAN SHEETS\STRUCTURAL DETAILS\D0-STR-DTL-502.dwg By: jordanl

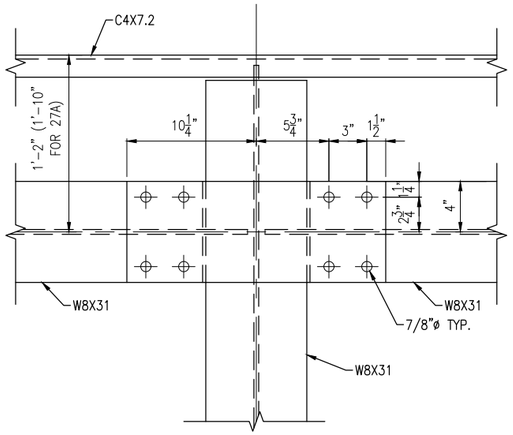

27 DETAIL
SCALE: 1"=1'-0"

27A SIMILAR, AS NOTED

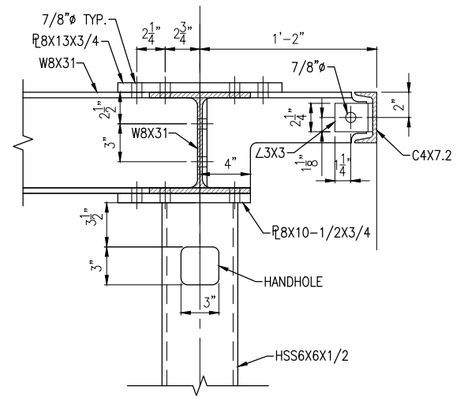

28 SECTION
SCALE: 1"=1'-0"

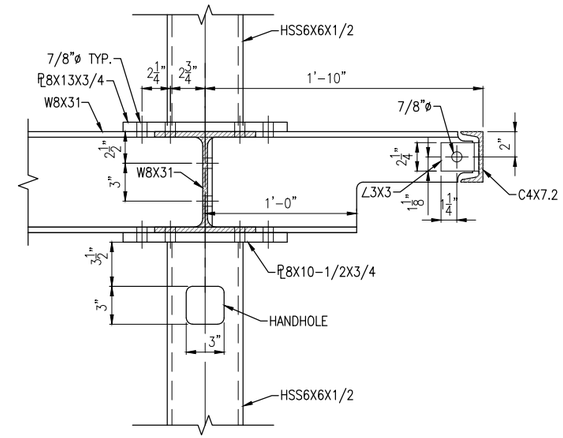

29 SECTION
SCALE: 1"=1'-0"

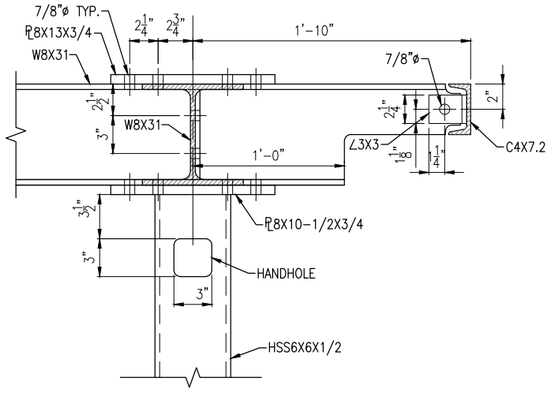

30 SECTION
SCALE: 1"=1'-0"

SHEET NOTES

1. DO NOT SCALE DRAWINGS FOR CONSTRUCTION PURPOSES, USE PLAN INFORMATION, DIMENSIONS DETAILS AND FIELD VERIFICATION.
2. CONTRACTOR SHALL VERIFY ALL DIMENSIONS. ANY DISCREPANCIES BETWEEN DRAWINGS AND FIELD CONDITIONS SHALL BE REPORTED TO THE C.A.R. PRIOR TO PROCEEDING WITH WORK.

NO.	DATE	BY	CHECK	DESIGN	REVISION / SUBMITTAL

AECOM

90% SUBMISSION - 01/22/16

METROPOLITAN COUNCIL

SOUTHWEST Green Line LRT Extension

CIVIL - VOLUME 11E
STATIONS COMMON DETAILS
STEEL SECTIONS AND DETAILS

DISCIPLINE: STRUCTURES

SHEET NAME: D0-STR-DTL-503

SHEET 88 OF 111

Jan, 15 2016 10:28 am K:\Projects\Minneapolis_Light_Rail\Station_Structural_Drawings\CAD\OVERALL\PLAN SHEETS\STRUCTURAL DETAILS\D0-STR-DTL-503.dwg By: jordanl

GRADE BEAM SCHEDULE							
GRADE BEAM DIMENSIONS				GRADE BEAM REINFORCEMENT			
LABEL	DEPTH	WIDTH	TOF	A	B	C	D
GB1	4'–0"	1'–6"	SEE PLAN	3 #8	2 #5	2 #8	#4@12" O.C.
GB2	4'–0"	2'–2"	SEE PLAN	4 #8	2 #5	2 #8	#4@12" O.C.

PILE CAP SCHEDULE										
PILE CAP DIMENSIONS					PILE CAP REINFORCEMENT					
CAP LABEL	DEPTH	WIDTH	LENGTH	TOF	A	B	C	D	E	H
PC1	4'–0"	3'–0"	3'–0"	SEE PLAN						
PC2	2'–6"	3'–0"	3'–0"	SEE PLAN						
PC3	4'–0"	6'–10"	3'–4"	SEE PLAN						
PC4	2'–0"	3'–0"	16'–0"	SEE PLAN						
PC5	4'–0"	3'–0"	5'–6"	SEE PLAN						

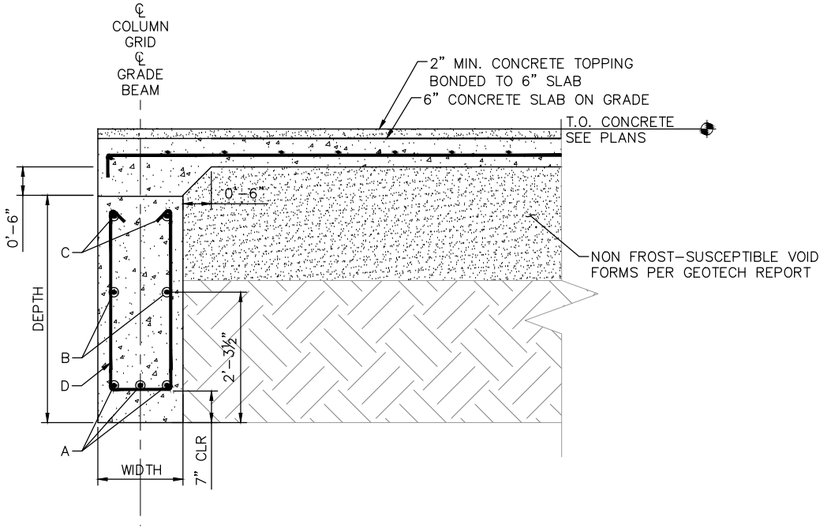

3 TYPICAL EDGE GRADE BEAM
SCALE:3/8" = 1'–0"

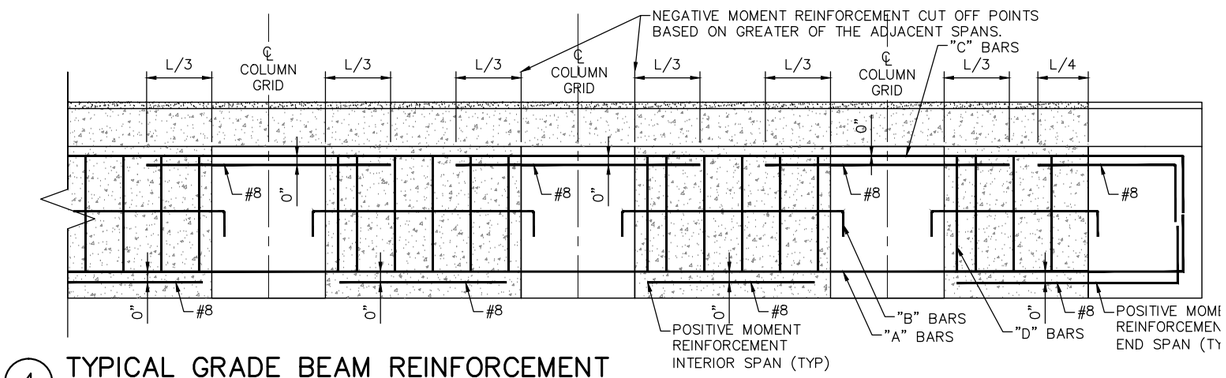

4 TYPICAL GRADE BEAM REINFORCEMENT
SCALE:1/4" = 1'–0"

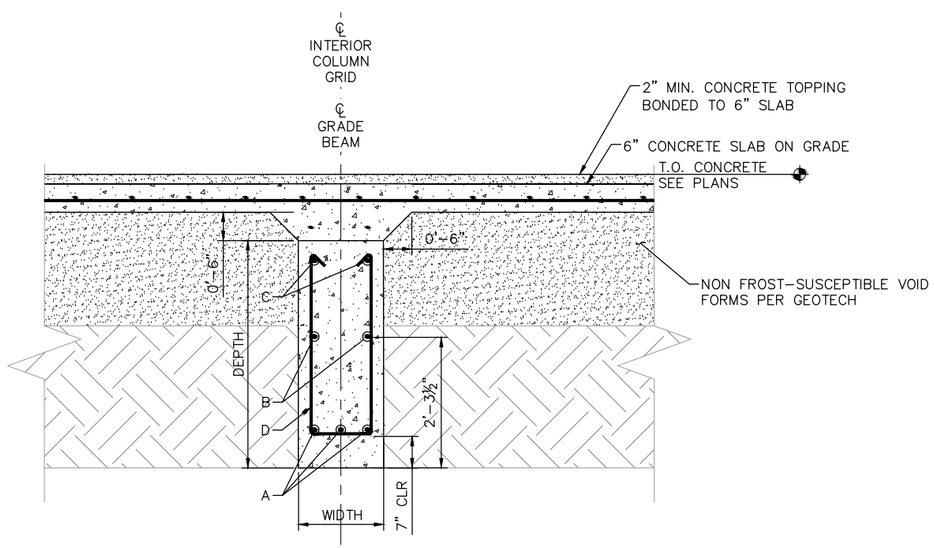

1 TYPICAL INTERIOR GRADE BEAM
SCALE:3/8" = 1'–0"

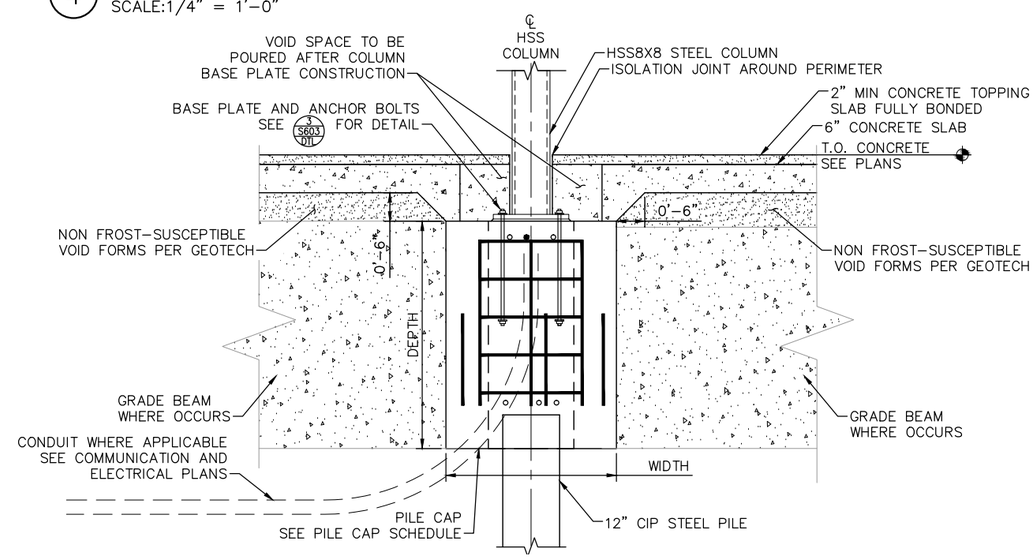

2 TYPICAL PILE CAP
SCALE:3/8" = 1'–0"

NO.	DATE	BY	CHECK	DESIGN	REVISION / SUBMITTAL

AECOM Kimley»Horn

90% SUBMISSION - 01/22/16

METROPOLITAN COUNCIL

SOUTHWEST Green Line LRT Extension

CIVIL - VOLUME 11E
GENERAL STRUCTURAL
VC TYPICAL FOUNDATION DETAILS

DISCIPLINE: STRUCTURES

SHEET NAME: D0-STR-DTL-601

SHEET 89 OF 111

Jan, 18 2016 08:21 am V:\3400_ADC\CAD\SEGMENT E4\PLAN SHEETS\STRUCTURES\VWHT-STATION\92 D0-STR-DTL-604.dwg By: scott.shepard

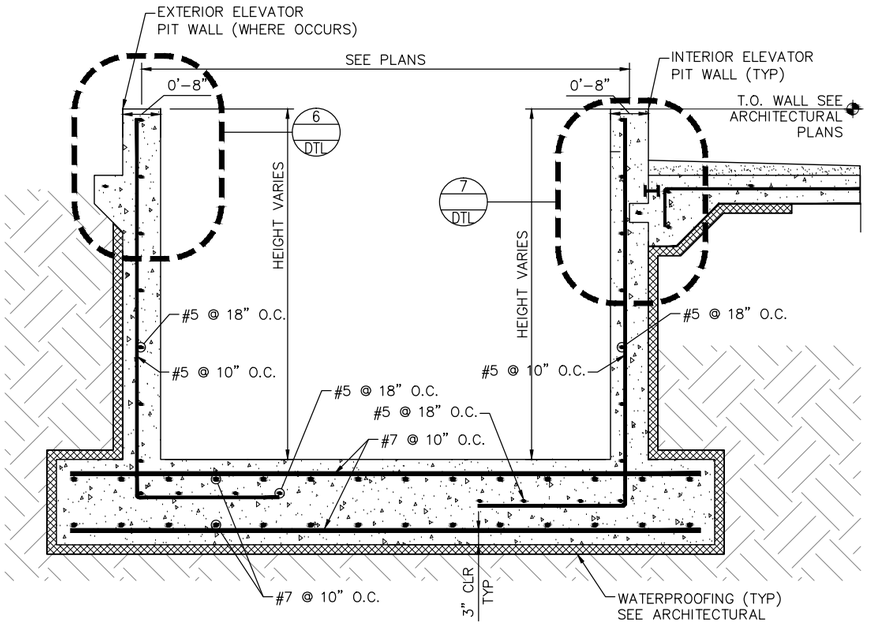

5 TYPICAL ELEVATOR PIT WALL
SCALE:3/8" = 1'-0"

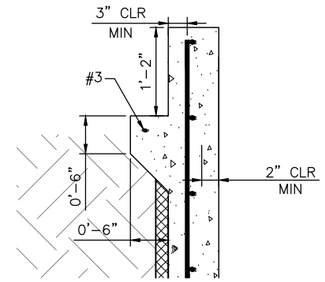

6 TYPICAL EXTERIOR ELEVATOR PIT WALL DETAIL
SCALE:1" = 1'-0"

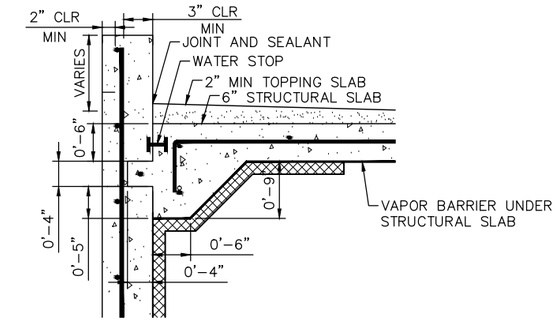

7 TYPICAL ELEVATOR PIT WALL STRUCTURAL SLAB CONNECTION
SCALE:1" = 1'-0"

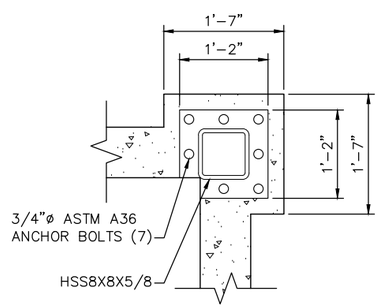

1 ELEVATOR PIT CONCRETE PIER CONNECTION
SCALE:1" = 1'-0"

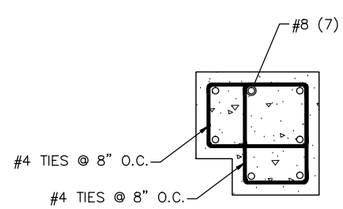

2 ELEVATOR PIT CONCRETE PIER SECTION
SCALE:1" = 1'-0"

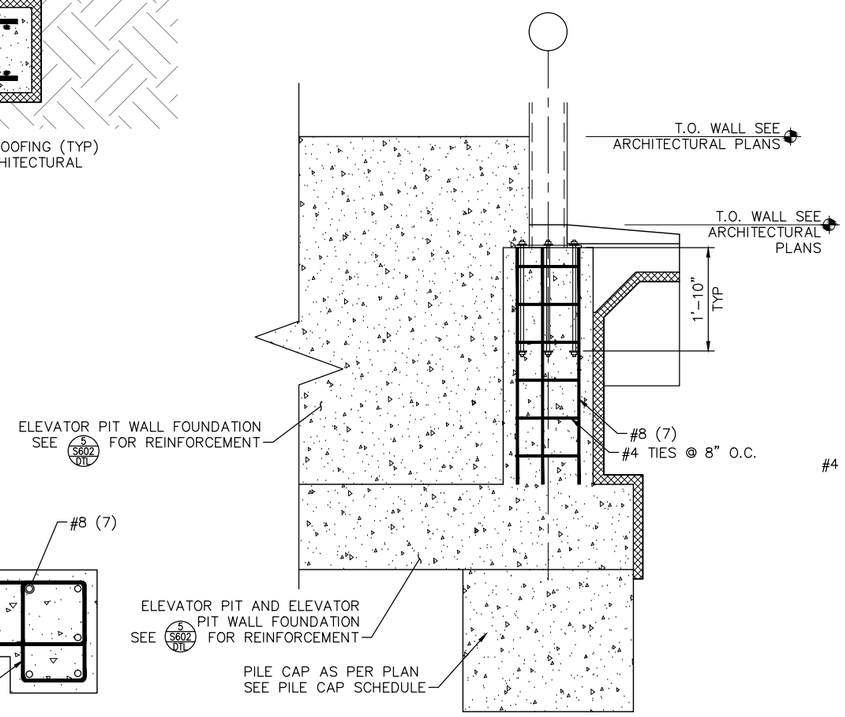

3 ELEVATOR ENTRANCE SECTION
SCALE:3/8" = 1'-0"

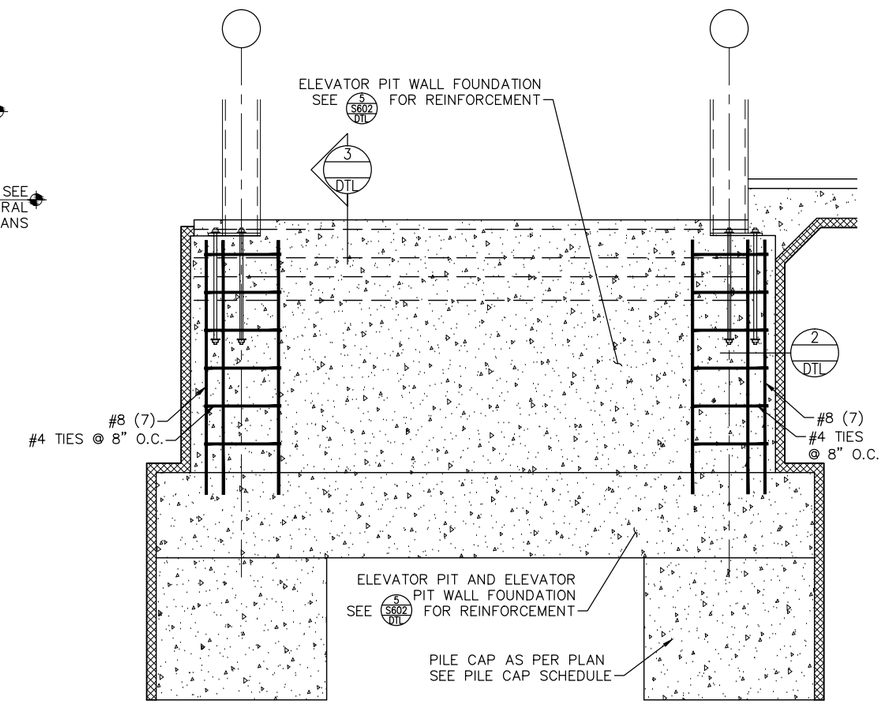

4 TYPICAL ELEVATOR PIT WALL COLUMN CONNECTION
SCALE:3/8" = 1'-0"

NO.	DATE	BY	CHECK	DESIGN	REVISION / SUBMITTAL

AECOM Kimley»Horn

90% SUBMISSION - 01/22/16

METROPOLITAN COUNCIL

SOUTHWEST Green Line LRT Extension

CIVIL - VOLUME 11E
GENERAL STRUCTURAL
VC TYPICAL FOUNDATION DETAILS

DISCIPLINE: STRUCTURES

SHEET NAME: D0-STR-DTL-602

SHEET 90 OF 111

Jan, 18 2016 08:21 am V:\3400_ADC\CAD\SEGMENT E4\PLAN SHEETS\STRUCTURES\VNWHT-STATION\92 D0-STR-DTL-604.dwg By: scott.shepard

4 DRIVER AMENITY EDGE CONDITION
SCALE:3/8" = 1"

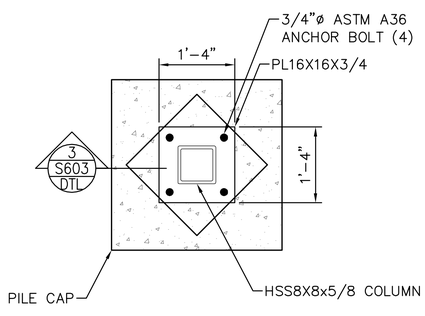

1 TYPICAL COLUMN BASE CONNECTION
SCALE:3/8" = 1"

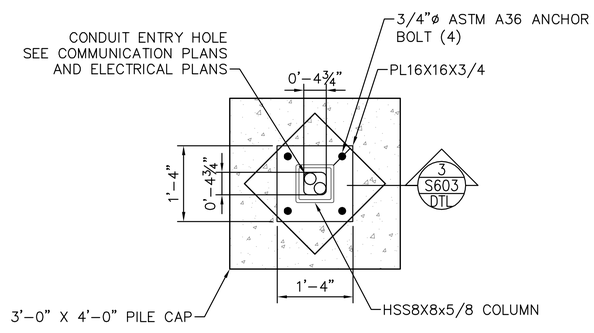

2 TYPICAL COMM AND ELECTRICAL COLUMN BASE CONNECTION
SCALE:3/8" = 1"

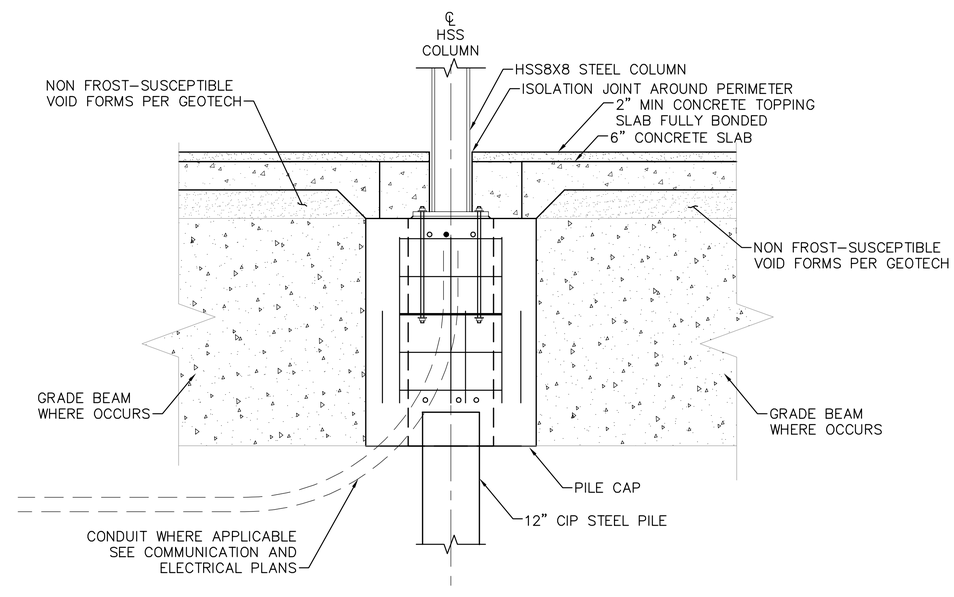

3 TYPICAL COLUMN BASE CONNECTION SECTION
SCALE:3/8" = 1"

NO.	DATE	BY	CHECK	DESIGN	REVISION / SUBMITTAL

AECOM Kimley»Horn

90% SUBMISSION - 01/22/16

METROPOLITAN COUNCIL

SOUTHWEST Green Line LRT Extension

CIVIL - VOLUME 11E
GENERAL STRUCTURAL
VC TYPICAL FOUNDATION DETAILS

DISCIPLINE: STRUCTURES

SHEET NAME: D0-STR-DTL-603

SHEET 91 OF 111

Jan, 18 2016 08:21 am V:\3400_ADC\CAD\SEGMENT E4\PLAN SHEETS\STRUCTURES\VNWHT-STATION\92 D0-STR-DTL-604.dwg By: scott.shepard

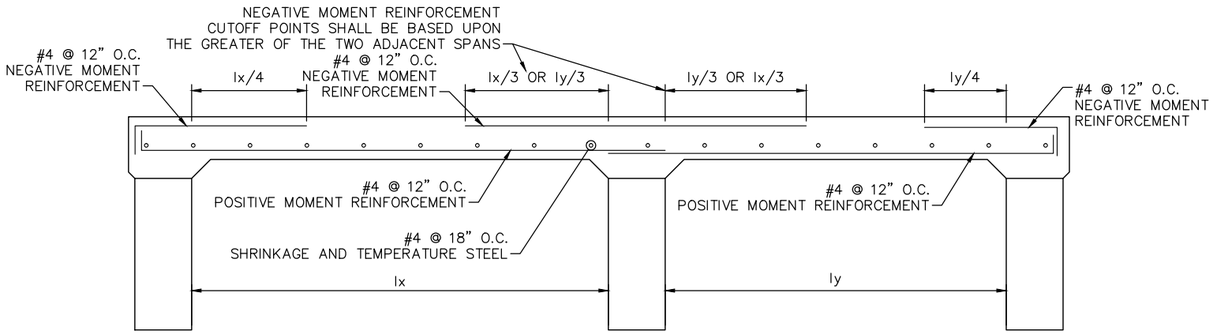

4 STRUCTURAL SLAB REINFORCEMENT LAYOUT

SCALE: 1/4" = 1'-0"

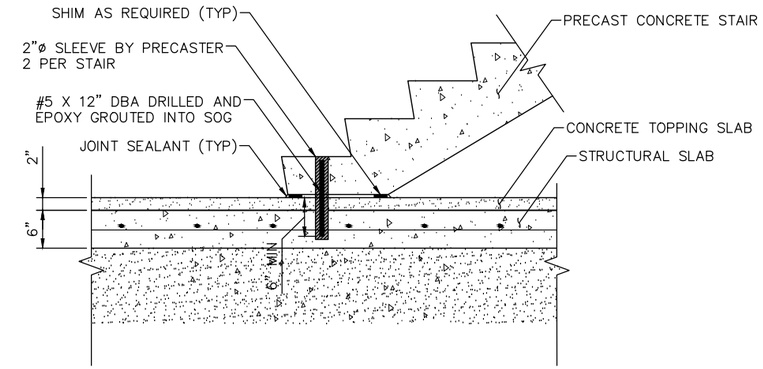

5 PRECAST STAIR TO SLAB CONNECTION

SCALE: 1/2" = 1'-0"

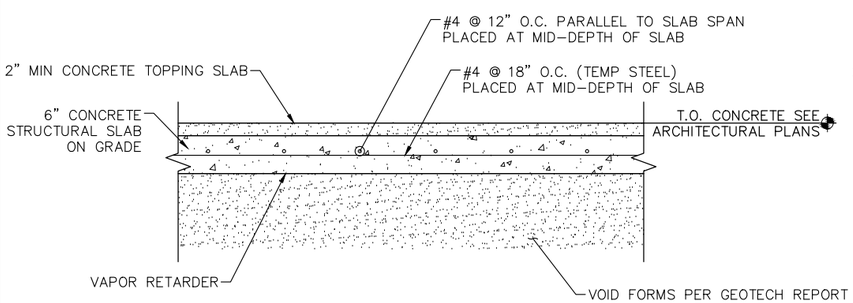

1 TYPICAL STRUCTURAL SLAB ON GRADE

SCALE: 1/2" = 1'-0"

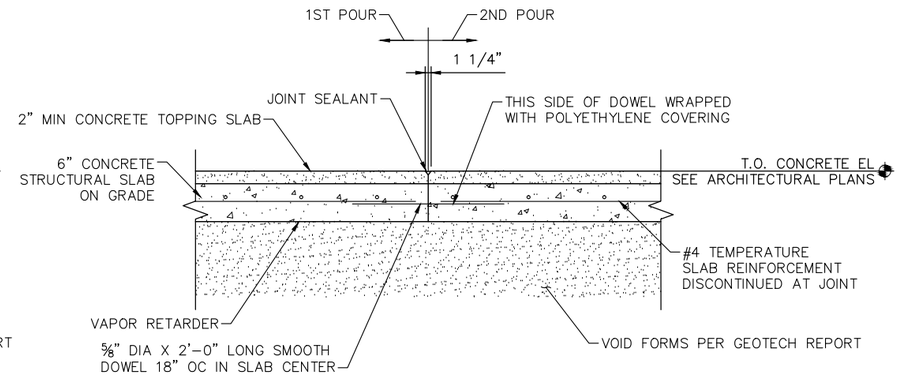

NOTES:

1. PAINT FACE OF JOINT WITH BOND BREAKING COMPOUND PRIOR TO SECOND POUR

2 TYPICAL CONSTRUCTION JOINT DETAIL

SCALE: 1/2" = 1'-0"

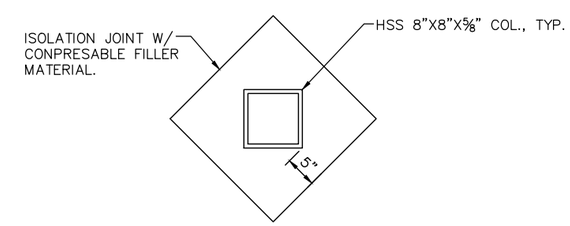

3 TYPICAL SLAB ON GRADE CONTROL JOINT

SCALE: 1/2" = 1'-0"

NO.	DATE	BY	CHECK	DESIGN	REVISION / SUBMITTAL

AECOM Kimley»Horn

90% SUBMISSION - 01/22/16

METROPOLITAN COUNCIL

SOUTHWEST Green Line LRT Extension

CIVIL - VOLUME 11E
GENERAL STRUCTURAL
VC TYPICAL SLAB ON GRADE DETAILS

DISCIPLINE: STRUCTURES

SHEET NAME: D0-STR-DTL-604

SHEET 92 OF 111

Jan, 18 2016 08:21 am V:\3400_ADC\CAD\SEGMENT E4\PLAN SHEETS\STRUCTURES\VNWHT-STATION\92 D0-STR-DTL-604.dwg By: scott.shepard

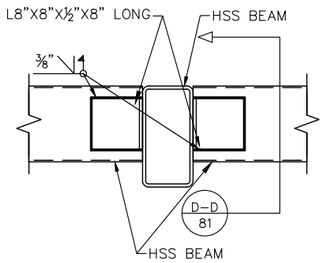

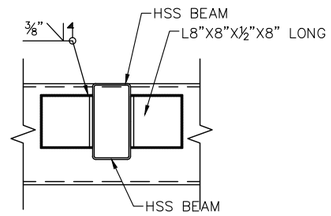

D–D

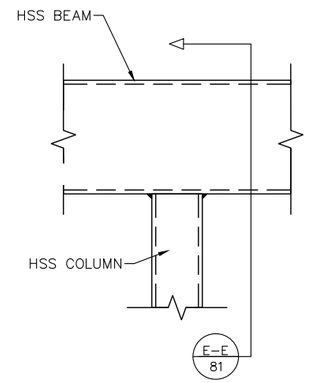

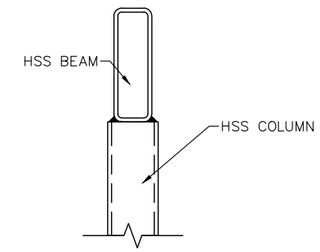

E–E

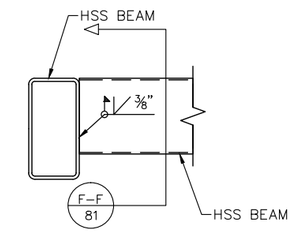

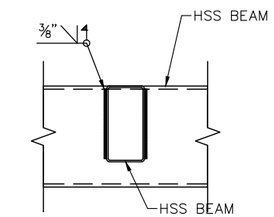

F–F

4 HSS BEAM TO HSS BEAM MOMENT CONNECTION
SCALE: 1/2" = 1'–0"

5 HSS BEAM CONTINUOUS OVER COLUMN
SCALE: 1/2" = 1'–0"

6 HSS BEAM TO HSS BEAM SHEAR CONNECTION
SCALE: 1/2" = 1'–0"

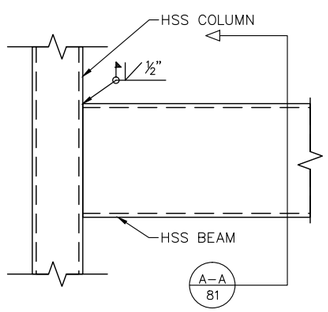

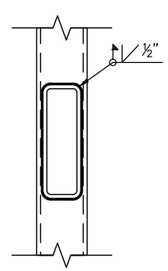

A–A

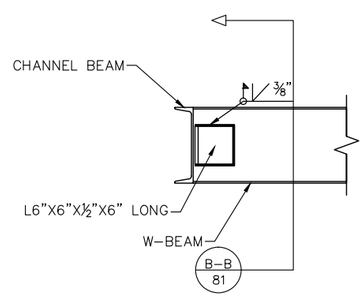

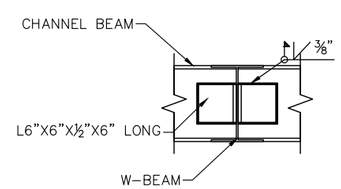

B–B

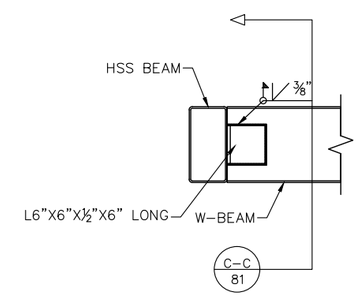

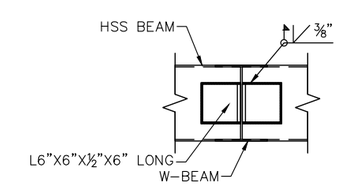

C–C

1 HSS BEAM TO HSS COLUMN MOMENT CONNECTION
SCALE: 1/2" = 1'–0"

2 W SECTION TO CHANNEL SHEAR CONNECTION
SCALE: 1/2" = 1'–0"

3 HSS TO W–SECTION MOMENT CONNECTION
SCALE: 1/2" = 1'–0"

NO.	DATE	BY	CHECK	DESIGN	REVISION / SUBMITTAL

AECOM Kimley»Horn

90% SUBMISSION - 01/22/16

METROPOLITAN COUNCIL

SOUTHWEST Green Line LRT Extension

CIVIL - VOLUME 11E
GENERAL STRUCTURAL
VC TYPICAL STEEL CONNECTION DETAILS

DISCIPLINE: STRUCTURES

SHEET NAME: D0-STR-DTL-605

SHEET 93 OF 111

Jan, 18 2016 08:22 am V:\3400_ADC\CAD\SEGMENT E4\PLAN SHEETS\STRUCTURES\VNWHT-STATION\95 D0-STR-DTL-607.dwg By: scott.shepard

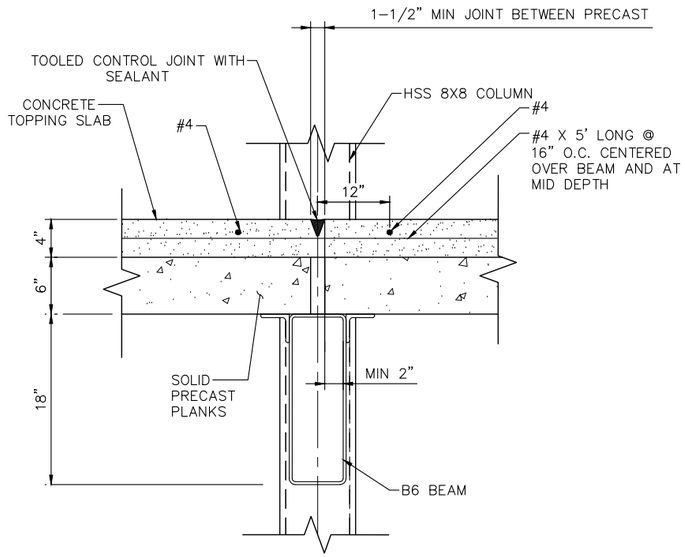

4 ELEVATED PRECAST SLAB OVER BEAM
SCALE: 3/4" = 1'-0"

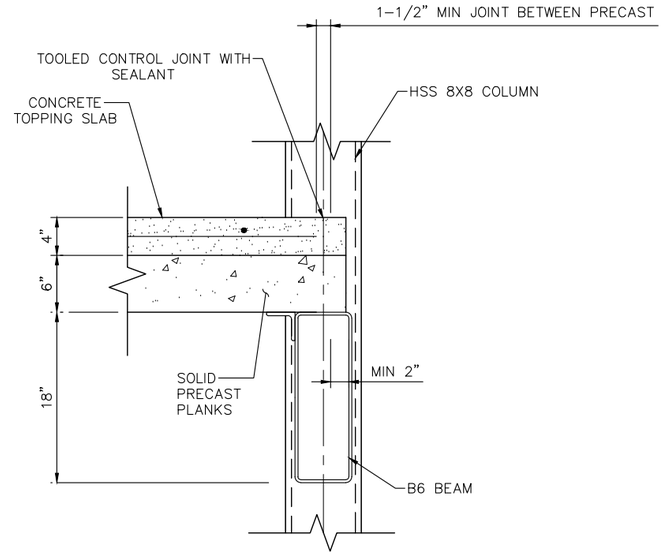

5 ELEVATED PRECAST SLAB INTERIOR EDGE CONDITION
SCALE: 3/4" = 1'-0"

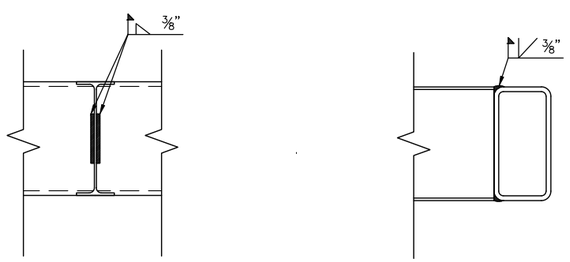

1 W SECTION TO HSS BEAM SHEAR CONNECTION
SCALE: 3/4" = 1'-0"

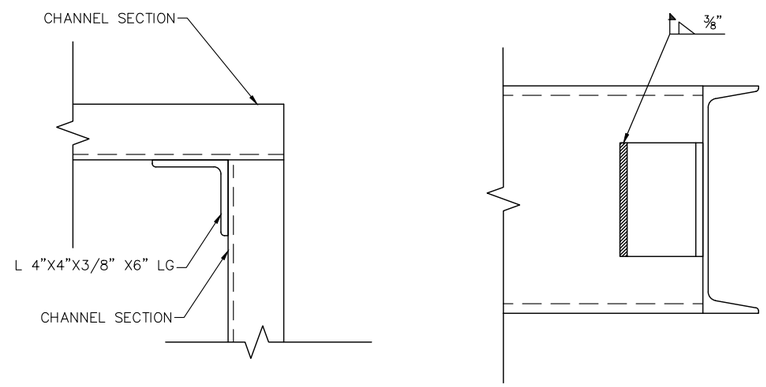

2 CHANNEL TO CHANNEL CONNECTION
SCALE: 1-1/2" = 1'-0"

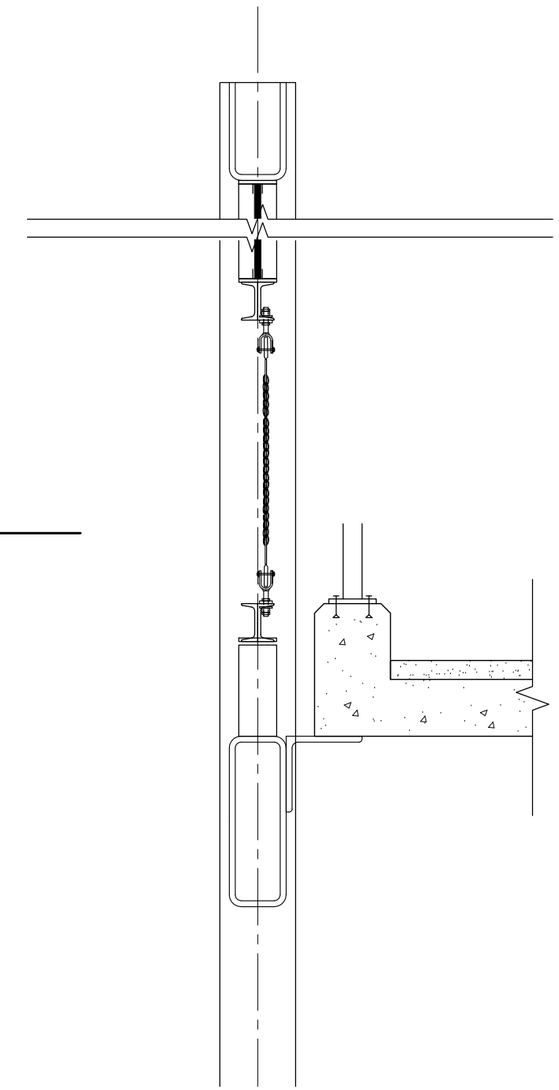

3 BRIDGE LEVEL EDGE CONDITION DETAIL
SCALE: 3/4" = 1'-0"

NO.	DATE	BY	CHECK	DESIGN	REVISION / SUBMITTAL

AECOM Kimley»Horn

90% SUBMISSION - 01/22/16

METROPOLITAN COUNCIL

SOUTHWEST Green Line LRT Extension

CIVIL - VOLUME 11E
GENERAL STRUCTURAL
VC TYPICAL STEEL CONNECTION DETAILS

DISCIPLINE: STRUCTURES

SHEET NAME: D0-STR-DTL-606

SHEET 94 OF 111

Jan, 18 2016 08:22 am V:\3400_ADC\CAD\SEGMENT E4\PLAN SHEETS\STRUCTURES\VNWHT-STATION\95 D0-STR-DTL-607.dwg By: scott.shepard

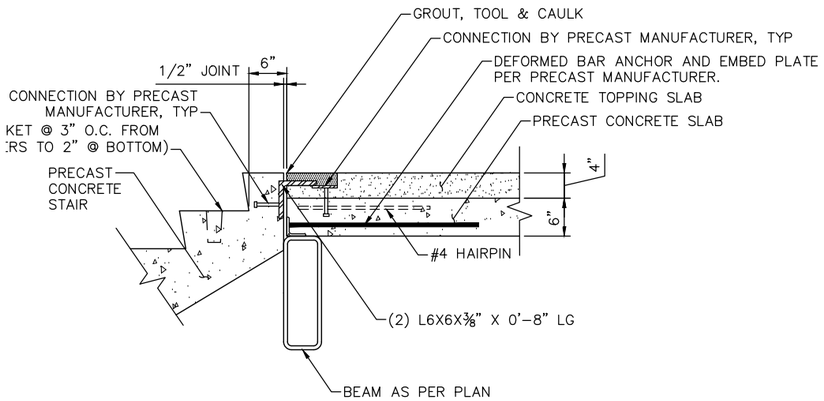

4 ELEVATED PRECAST STAIR SUPPORT CONNECTION OVER BEAM
SCALE: 1/2" = 1'-0"

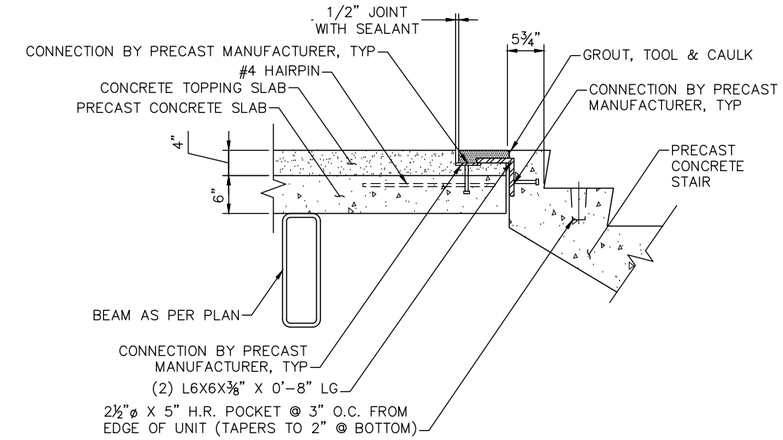

6 ELEVATED PRECAST STAIR SUPPORT CONNECTION OVER BEAM
SCALE: 1/2" = 1'-0"

5 HSS COLUMN BEARING ON HSS BEAM
SCALE: 1/2" = 1'-0"

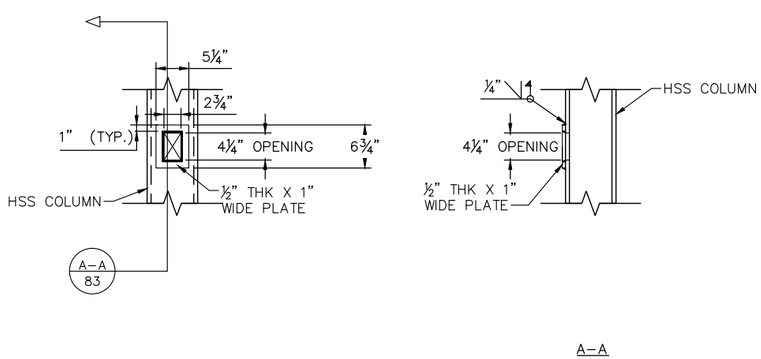

1 TYPICAL HAND HOLE DETAILS
SCALE: 1/2" = 1'-0"

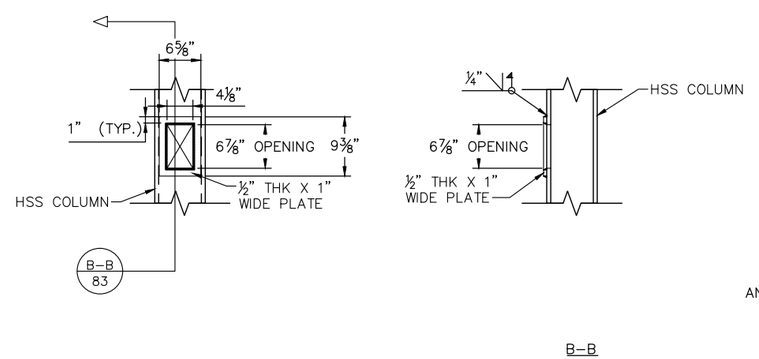

2 NON-TYPICAL HAND HOLE DETAILS
SCALE: 1/2" = 1'-0"

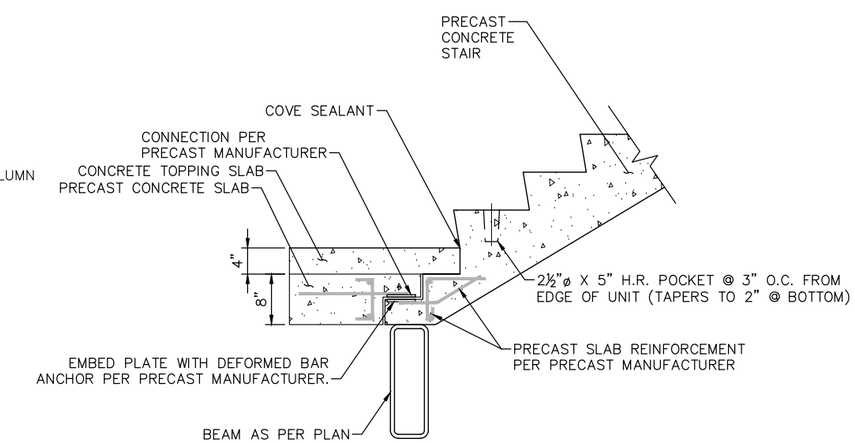

3 PRECAST STAIR TO PRECAST STAIR LANDING
SCALE: 1/2" = 1'-0"

NO.	DATE	BY	CHECK	DESIGN	REVISION / SUBMITTAL

AECOM Kimley»Horn

90% SUBMISSION - 01/22/16

METROPOLITAN COUNCIL

SOUTHWEST Green Line LRT Extension

CIVIL - VOLUME 11E
GENERAL STRUCTURAL
VC TYPICAL DETAILS

DISCIPLINE: STRUCTURES

SHEET NAME: D0-STR-DTL-607

SHEET 95 OF 111

Jan, 18 2016 08:22 am V:\3400_ADC\CAD\SEGMENT E4\PLAN SHEETS\STRUCTURES\VMWHT-STATION\95 D0-STR-DTL-607.dwg By: scott.shepard

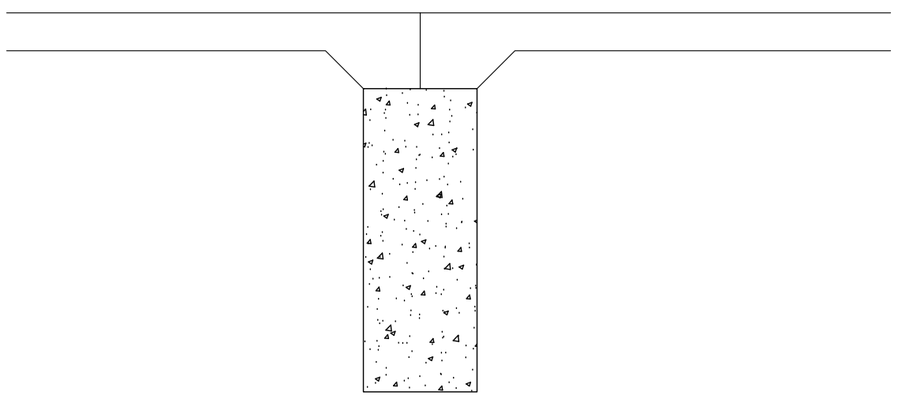

1 TRANSITION SLAB/STRUCTURAL SLAB JOINT
SCALE: 1/2" = 1'-0"

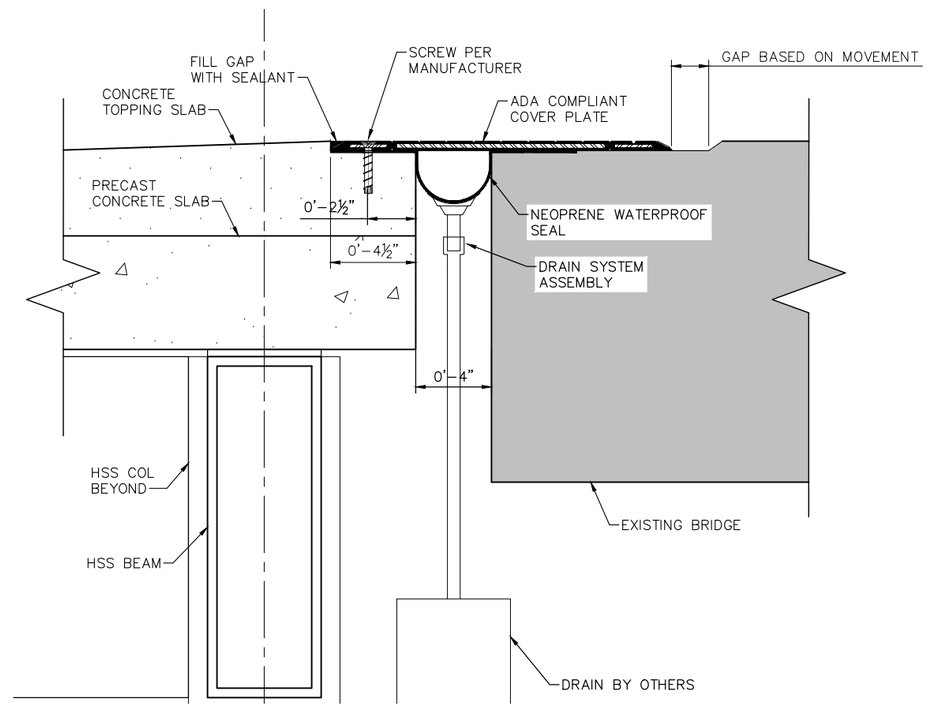

2 EXPANSION JOINT
EXISTING BRIDGE TO VC STRUCTURE
SCALE: 1" = 6'-0"

NO.	DATE	BY	CHECK	DESIGN	REVISION / SUBMITTAL

AECOM Kimley»Horn

90% SUBMISSION - 01/22/16

METROPOLITAN COUNCIL

SOUTHWEST Green Line LRT Extension

CIVIL - VOLUME 11E
GENERAL STRUCTURAL
VC TYPICAL DETAILS

DISCIPLINE: STRUCTURES

SHEET NAME: D0-STR-DTL-608

SHEET 96 OF 111

Jan, 18 2016 08:22 am V:\3400_ADC\CAD\SEGMENT E4\PLAN SHEETS\STRUCTURES\VNWHT-STATION\99 D0-STR-DTL-611.dwg By: scott.shepard

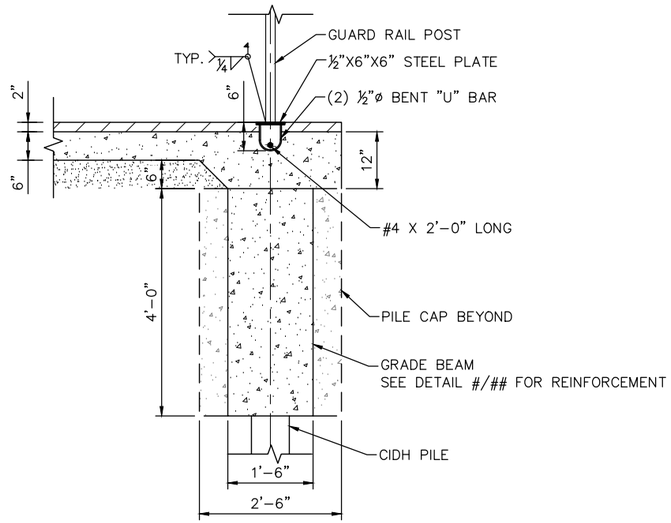

4 GUARDRAIL CONNECTION AT SLAB ON GRADE
SCALE: 3/8" = 1'-0"

5 GUARDRAIL CONNECTION AT SLAB ON GRADE
SCALE: 3/8" = 1'-0"

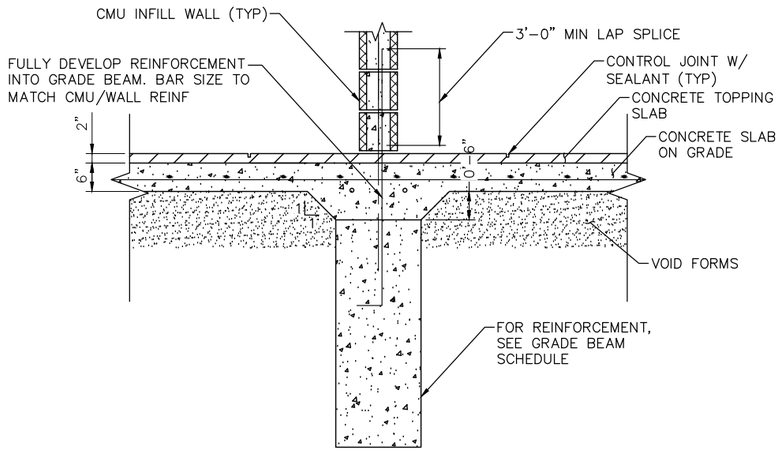

1 SECTION AT CMU WALL
SCALE: 3/8" = 1'-0"

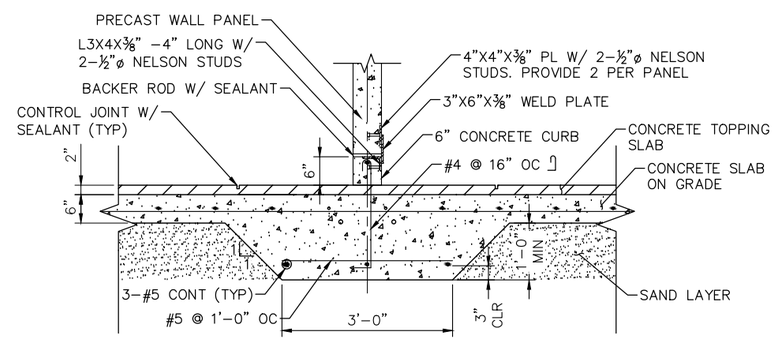

2 SECTION AT CURB/PRECAST WALL
SCALE: 3/8" = 1'-0"

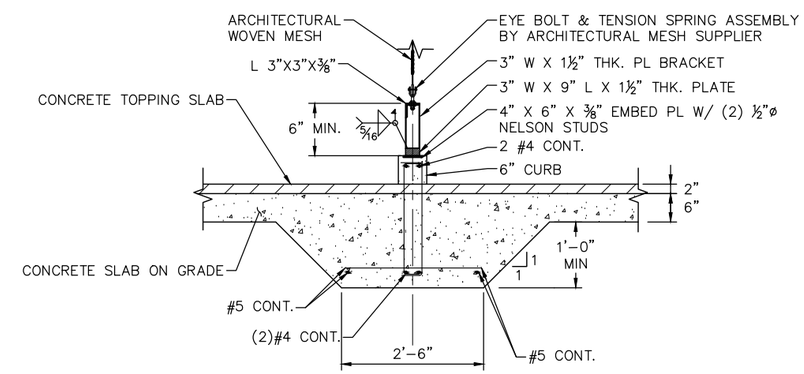

3 SECTION AT ARCHITECTURAL WOVEN MESH
SCALE: 3/8" = 1'-0"

NO.	DATE	BY	CHECK	DESIGN	REVISION / SUBMITTAL

AECOM Kimley»Horn

90% SUBMISSION - 01/22/16

METROPOLITAN COUNCIL

SOUTHWEST Green Line LRT Extension

CIVIL - VOLUME 11E
GENERAL STRUCTURAL
VC TYPICAL DETAILS

DISCIPLINE: STRUCTURES

SHEET NAME: D0-STR-DTL-609

SHEET 97 OF 111

Jan, 18 2016 08:22 am V:\3400_ADC\CAD\SEGMENT E4\PLAN SHEETS\STRUCTURES\VNWHT-STATION\99 D0-STR-DTL-611.dwg By: scott.shepard

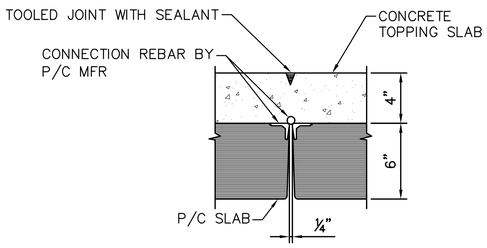

AT CONNECTION

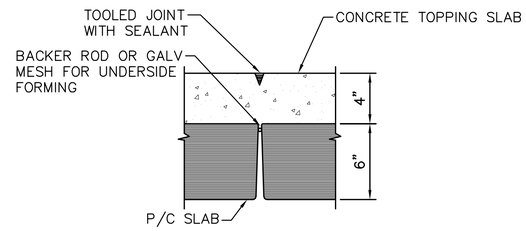

AWAY FROM CONNECTION

1 PRECAST SLAB JOINT DETAIL

SCALE:2" = 1'-0"

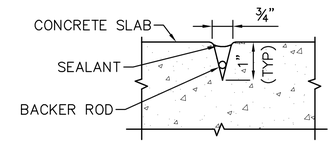

2 SEALANT DETAIL

SCALE:4" = 1'-0"

NO.	DATE	BY	CHECK	DESIGN	REVISION / SUBMITTAL

AECOM Kimley»Horn

90% SUBMISSION - 01/22/16

METROPOLITAN COUNCIL

SOUTHWEST Green Line LRT Extension

CIVIL - VOLUME 11E
GENERAL STRUCTURAL
VC TYPICAL DETAILS

DISCIPLINE: STRUCTURES

SHEET NAME: D0-STR-DTL-612

SHEET 100 OF 111

Jan, 18 2016 08:23 am V:\3400_ADC\CAD\SEGMENT E4\PLAN SHEETS\STRUCTURES\WWHT-STATION\102 D0-STR-DTL-614.dwg By: scott.shepard

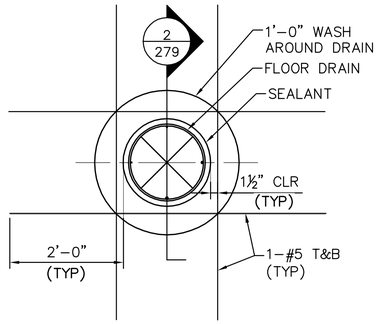

1 FLOOR DRAIN DETAIL – SLAB ON GRADE
SCALE: 3/8" = 1'–0"

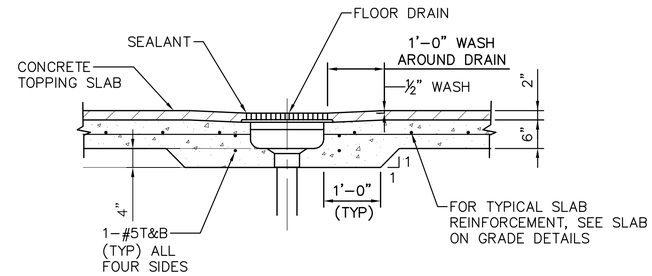

2 FLOOR DRAIN DETAIL – SLAB ON GRADE
SCALE: 3/8" = 1'–0"

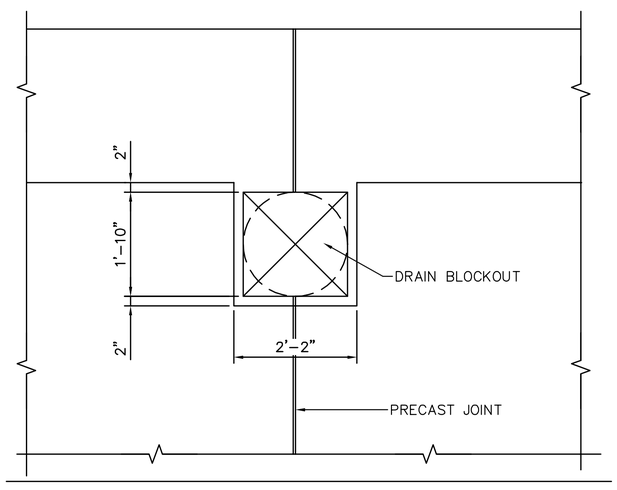

3 FLOOR DRAIN DETAIL – ELEVATED SLAB
SCALE: 1/2" = 1'–0"

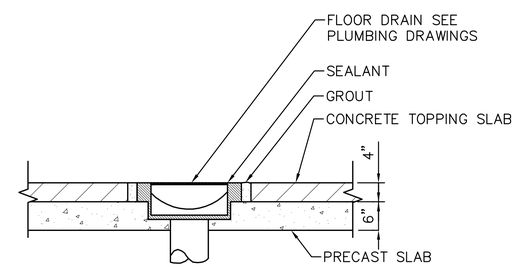

NOTES:

1. SLOPE TOPPING TO FLOOR DRAIN TO INSURE POSITIVE DRAINAGE.
2. FLOOR DRAIN OPENING IS TO BE LOCATED SO AS NOT TO INTERFERE WITH REINFORCING IN PRECAST AND TOPPING SLABS.

4 FLOOR DRAIN DETAIL – ELEVATED SLAB
SCALE: 1/2" = 1'–0"

NO.	DATE	BY	CHECK	DESIGN	REVISION / SUBMITTAL

AECOM Kimley»Horn

90% SUBMISSION - 01/22/16

METROPOLITAN COUNCIL

SOUTHWEST Green Line LRT Extension

CIVIL - VOLUME 11E
GENERAL STRUCTURAL
VC TYPICAL DETAILS

DISCIPLINE: STRUCTURES

SHEET NAME: D0-STR-DTL-613

SHEET 101 OF 111

Jan, 18 2016 08:23 am V:\3400_ADC\CAD\SEGMENT E4\PLAN SHEETS\STRUCTURES\WWHT-STATION\102 D0-STR-DTL-614.dwg By: scott.shepard

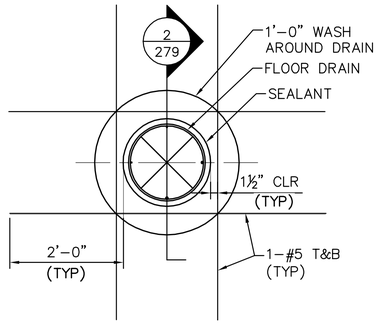

1 FLOOR DRAIN DETAIL – SLAB ON GRADE
SCALE: 3/8" = 1'-0"

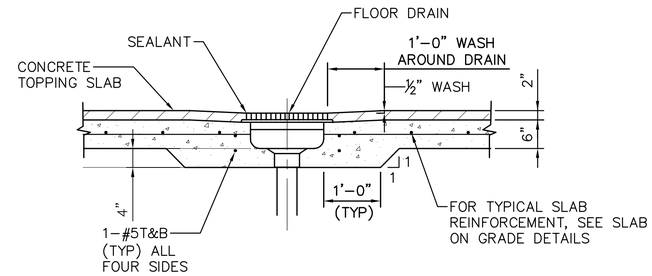

2 FLOOR DRAIN DETAIL – SLAB ON GRADE
SCALE: 3/8" = 1'-0"

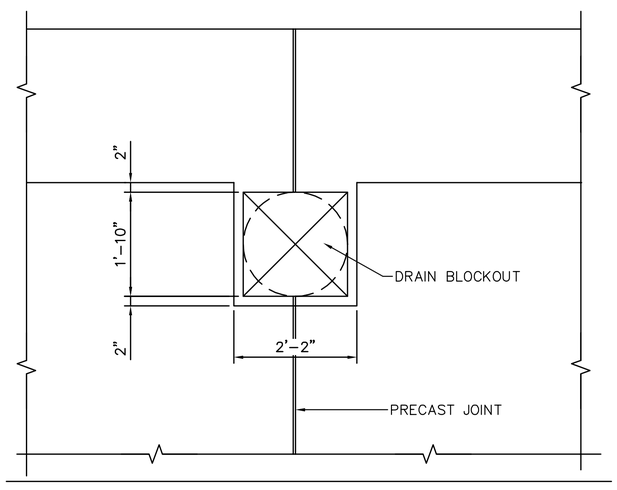

3 FLOOR DRAIN DETAIL – ELEVATED SLAB
SCALE: 1/2" = 1'-0"

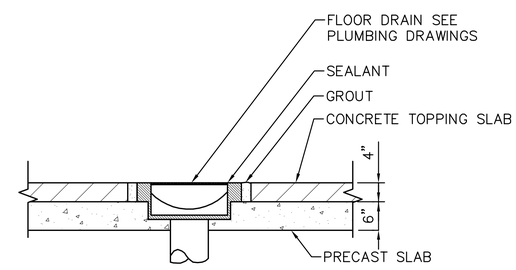

NOTES:

1. SLOPE TOPPING TO FLOOR DRAIN TO INSURE POSITIVE DRAINAGE.
2. FLOOR DRAIN OPENING IS TO BE LOCATED SO AS NOT TO INTERFERE WITH REINFORCING IN PRECAST AND TOPPING SLABS.

4 FLOOR DRAIN DETAIL – ELEVATED SLAB
SCALE: 1/2" = 1'-0"

NO.	DATE	BY	CHECK	DESIGN	REVISION / SUBMITTAL

AECOM Kimley»Horn

90% SUBMISSION - 01/22/16

METROPOLITAN COUNCIL

SOUTHWEST Green Line LRT Extension

CIVIL - VOLUME 11E
GENERAL STRUCTURAL
VC TYPICAL DETAILS

DISCIPLINE: STRUCTURES

SHEET NAME: D0-STR-DTL-614

SHEET 102 OF 111

Jan, 18 2016 08:23 am V:\3400_ADC\CAD\SEGMENT E4\PLAN SHEETS\STRUCTURES\WWHT-STATION\102 D0-STR-DTL-614.dwg By: scott.shepard

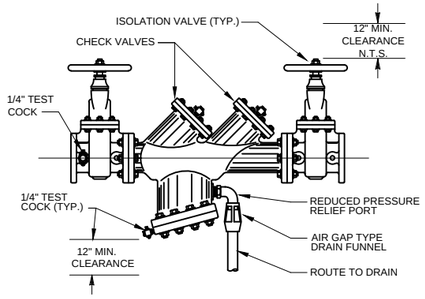

1 BACKFLOW PREVENTER DETAIL
NOT TO SCALE

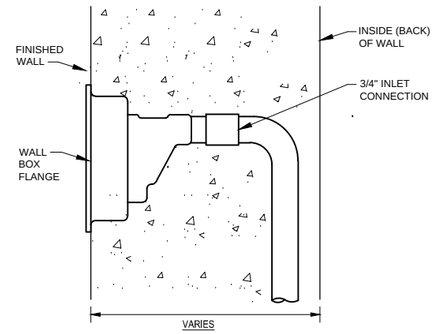

2 FREEZEPROOF WALL HYDRANT
NOT TO SCALE

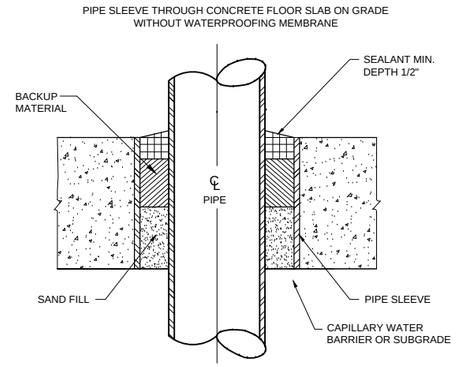

3 PIPE SLEEVE THROUGH CONCRETE FLOOR SLAB ON GRADE
NOT TO SCALE

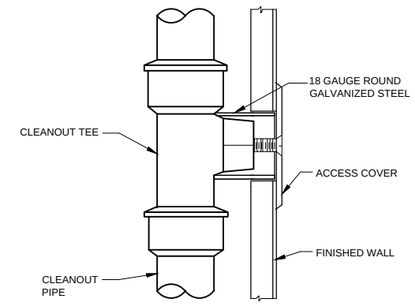

4 WALL CLEANOUT
NOT TO SCALE

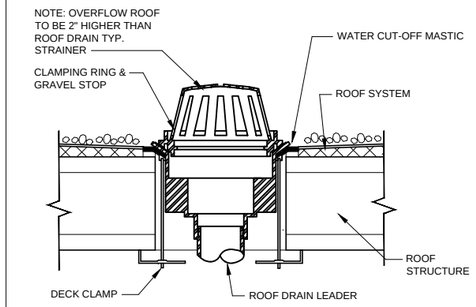

5 ROOF DRAIN DETAIL
NOT TO SCALE

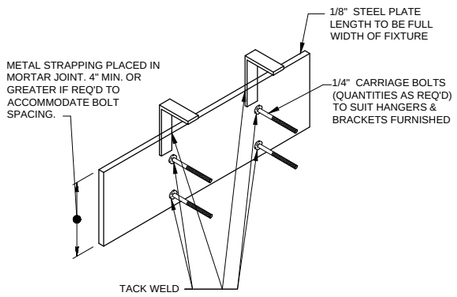

6 BACKUP PLATE FOR LAVS AND URINALS MOUNTED ON CELLULAR MASONRY WALL PIPE CHASE DETAIL
NOT TO SCALE

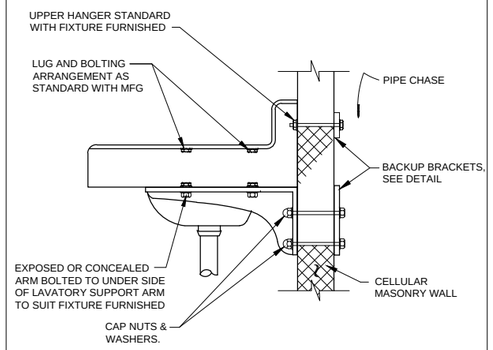

7 TYPICAL MOUNTING FOR P-6 CAST IRON LAVATORY ON CELLULAR MASONRY WALL PIPE CHASE DETAIL
NOT TO SCALE

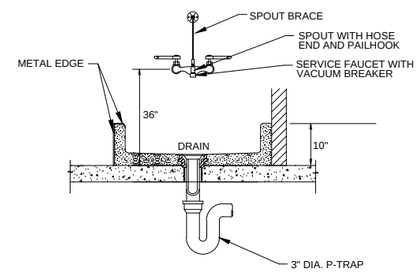

8 MOP SINK DETAIL
NOT TO SCALE

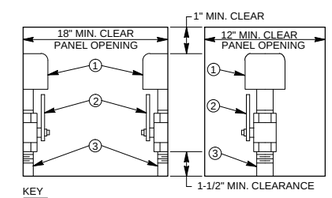

KEY

1. WATER HAMMER ARRESTOR
2. BALL VALVE, SAME NOMINAL SIZE AS PIPE BRANCH IN CHASE. OPENING IN BALL VALVE TO MATCH PIPE I.D.
3. PIPE SAME SIZE AS BRANCH IN CHASE TO WHICH IT IS ATTACHED.

NOTE: PROVIDE REDUCER IF REQUIRED BETWEEN VALVE AND WATER HAMMER ARRESTOR.

9 TYPICAL WATER HAMMER PANEL INSTALLATION-SINGLE AND DOUBLE
NOT TO SCALE

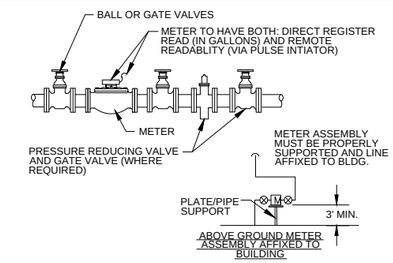

NOTES:

1. PROVIDE A "DRESSER-TYPE" COUPLING ON METER ASSEMBLY INSTALLATIONS IN VAULTS TO ALLOW FOR EASY REMOVAL OF FLANGED COMPONENTS.
2. METERING ASSEMBLY TO BE PROPERLY INSTALLED AND ADEQUATELY SUPPORTED TO ALLOW FOR EASY MAINTENANCE, REPAIR AND REPLACEMENT.

10 WATER METER CONFIGURATION LESS THAN 2"-DISK OR DISP TYPE
NOT TO SCALE

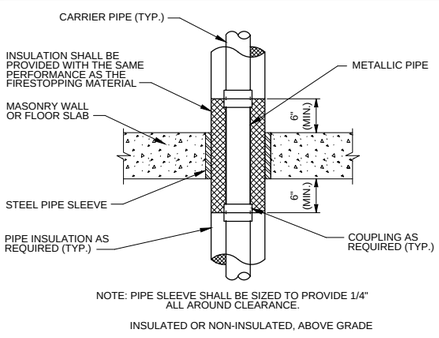

11 TYPICAL CONCRETE FLOOR OR MASONRY WALL PENETRATION
NOT TO SCALE

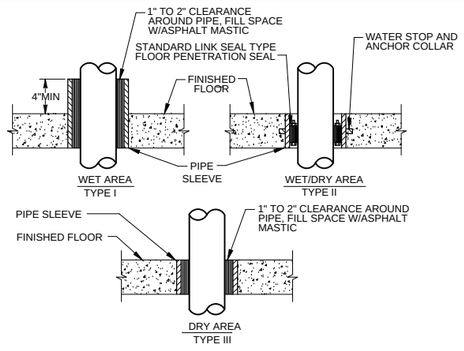

12 TYPICAL MEMBRANE WATERPROOF FLOOR PENETRATION
NOT TO SCALE

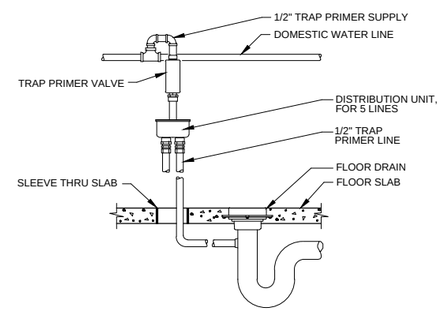

13 TRAP SEAL PRIMER DETAIL
NOT TO SCALE

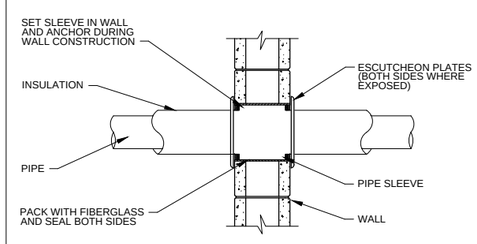

14 PIPE SLEEVE THRU INTERIOR WALL
NOT TO SCALE

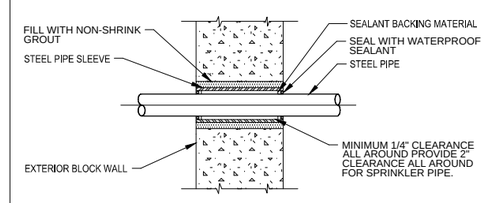

15 PIPE SLEEVE THRU EXTERIOR WALL
NOT TO SCALE

NO.	DATE	BY	CHECK	DESIGN	REVISION / SUBMITTAL

AECOM

LV ENGINEERING • LLC CERTIFIED WOMEN'S BUSINESS ENTERPRISE

90% SUBMISSION - 01/22/16

METROPOLITAN COUNCIL

SOUTHWEST Green Line LRT Extension

CIVIL - VOLUME 11E
STATIONS COMMON DETAILS
PLUMBING DETAILS

DISCIPLINE: PLUMBING

SHEET NAME: D0-PLM-DTL-001

SHEET 103 OF 111

Jan, 16 2016 02:57 pm Z:\Projects\AECOM SWLRT west\3400_ADC\CAD\OVERALL\PLUMBING\D0-PLM-DTL-001.dwg By: craig

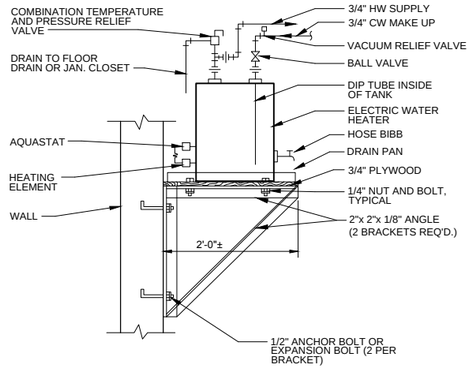

1 WALL MOUNTED ELEC WATER HEATER
NOT TO SCALE

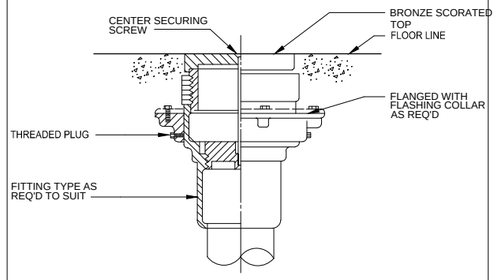

2 FLOOR CLEANOUT DETAIL
NOT TO SCALE

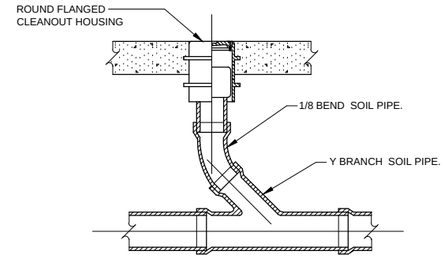

3 SANITARY CLEANOUT FLOOR SLAB DETAIL
NOT TO SCALE

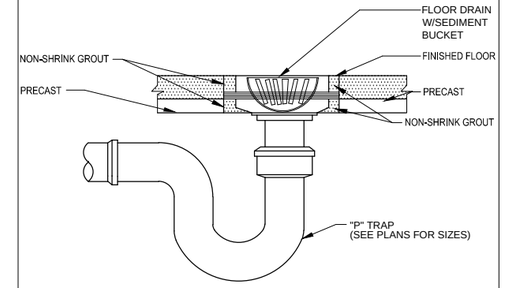

4 FLOOR DRAIN DETAIL
NOT TO SCALE

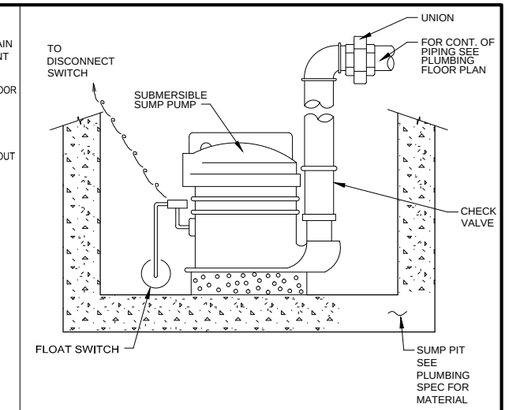

5 SUMP PUMP DETAIL
NOT TO SCALE

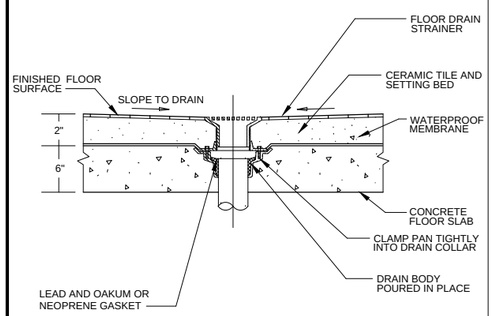

6 FLOOR DRAIN IN OPEN AREA
NOT TO SCALE

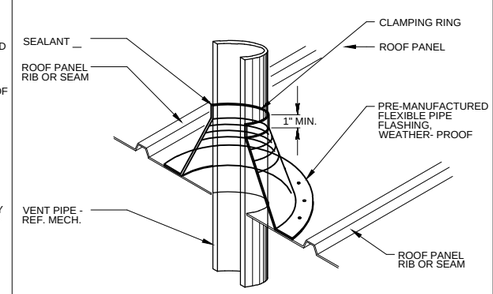

8 ROOF VENT DETAIL
NOT TO SCALE

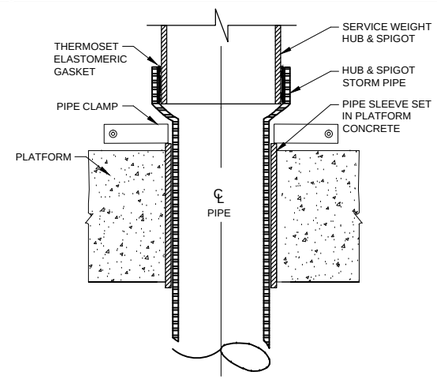

9 PRIMARY STORM DRAIN CONNECTION AT PLATFORM
NOT TO SCALE

NO.	DATE	BY	CHECK	DESIGN	REVISION / SUBMITTAL

AECOM

LV ENGINEERING • LLC CERTIFIED WOMEN'S BUSINESS ENTERPRISE

90% SUBMISSION - 01/22/16

METROPOLITAN COUNCIL

SOUTHWEST

CIVIL - VOLUME 11E
STATIONS COMMON DETAILS
PLUMBING DETAILS

DISCIPLINE: PLUMBING

SHEET NAME: D0-PLM-DTL-002

SHEET 104 OF 111

Jan. 16 2016 02:57 pm Z:\Projects\AECOM SWLRT west\3400_ADC\CAD\OVERALL\PLUMBING\D0-PLM-DTL-002.dwg By: craig

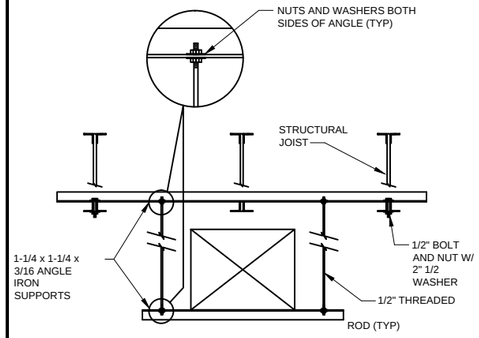

1 DUCT HANGER DETAIL
NOT TO SCALE

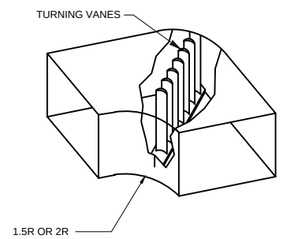

2 TYPICAL ELBOW DETAIL
NOT TO SCALE

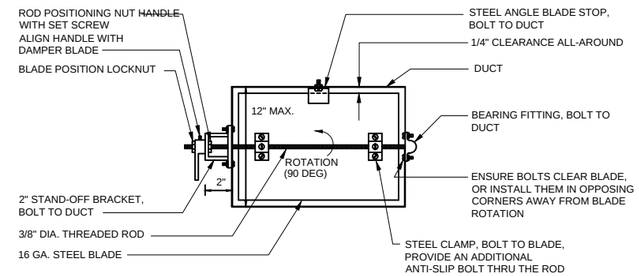

NOTES:
1. DAMPERS FOR ROUND DUCTS SHALL BE SIMILAR TO THE DAMPER SHOWN ABOVE.
2. ENSURE THAT FULL 90° DAMPER BLADE MOVEMENT IS UNOBSTRUCTED.
3. FOR DUCT HEIGHTS MORE THAN 12", PROVIDE FACTORY-FABRICATED OPPOSED BLADE DAMPERS.

3 MANUAL DAMPER (ADJUSTABLE SINGLE-BLADE BALANCING TYPE)
NOT TO SCALE

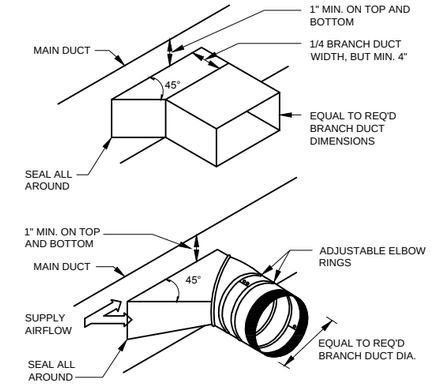

4 TYPICAL BRANCH TAKE-OFF FITTING
NOT TO SCALE

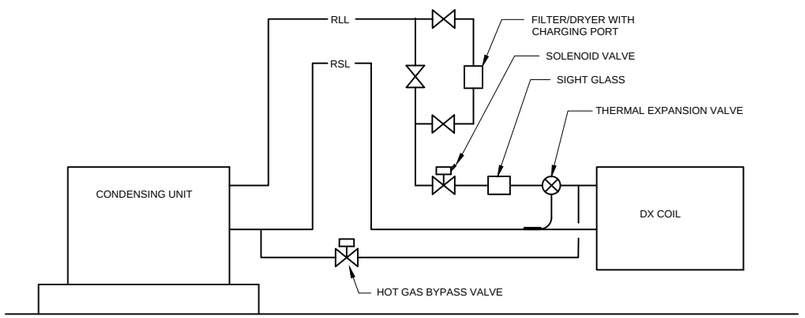

5 REFRIGERANT SCHEMATIC
NOT TO SCALE

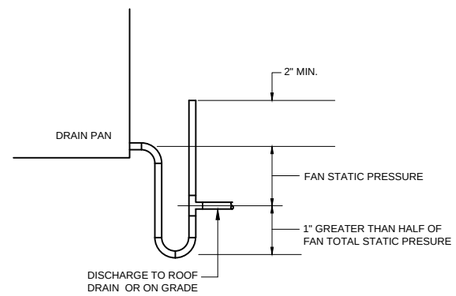

NOTE:
1. DRAIN LINE SHALL BE INSULATED.
2. DRAIN LINE SHALL PENETRATE THE ROOF LINE OR SLAB WITHIN THE CONFINEMENT OF THE HVAC EQUIPMENT CURB OR PAD.

6 CONDENSATE DRAIN TRAP DETAIL
NOT TO SCALE

NO.	DATE	BY	CHECK	DESIGN	REVISION / SUBMITTAL

AECOM

LV ENGINEERING • LLC CERTIFIED WOMEN'S BUSINESS ENTERPRISE

90% SUBMISSION - 01/22/16

METROPOLITAN COUNCIL

SOUTHWEST Green Line LRT Extension

CIVIL - VOLUME 11E
STATIONS COMMON DETAILS
HVAC DETAILS

DISCIPLINE: MECHANICAL

SHEET NAME: D0-MEC-DTL-001

SHEET 105 OF 111

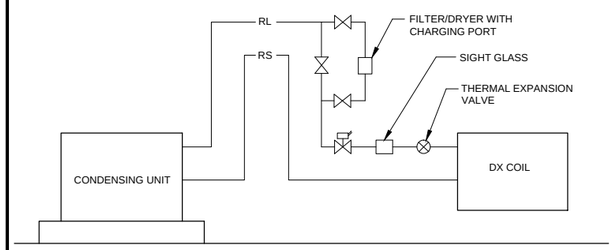

1 REFRIGERANT PIPING SCHEMATIC
N.T.S.

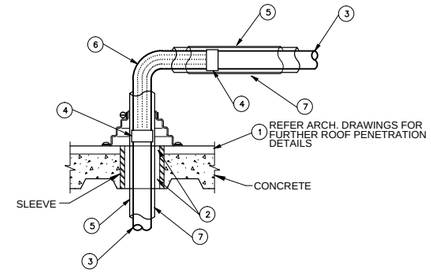

1. INSULATION AND BUILT UP ROOFING.
2. SEAL PENETRATION GAS-TIGHT WITH INSULATION AND FLEXIBLE SEALANT COMPATIBLE WITH PIPE MATERIAL.
3. STANDARD PIPE MATERIAL FOR REFRIGERANT LINES, SUPPORT PIPE AWAY FROM BUILDING.
4. SUITABLE ADAPTING COUPLING TO CONNECT COPPER REFRIGERANT LINE TO HOSE SECTION.
5. PIPE INSULATION SHALL BE CONTINUOUS THRU BOUNDARY SURFACE (ROOF) AND BEYOND.
6. NON-METAL HIGH PRESSURE HOSE SECTION. HOSE SECTION AND ABOVE ROOF PIPING SHALL BE COVERED W/INSULATION AND BANDED ALUMINUM PIPE JACKET.
7. PIPE SUPPORT POINT. ENSURE HOSE DOES NOT CARRY ANY PIPE LOAD FROM REFRIGERANT LINES, SEE NOTE 3.

2 REFRIGERANT LINE PENETRATION
N.T.S.

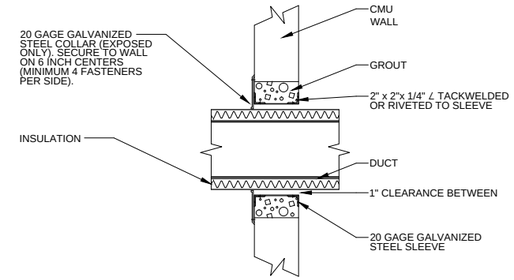

3 DUCT PENETRATION THRU WALL (NOT APPLICABLE TO FIRE-RATED WALLS)
N.T.S.

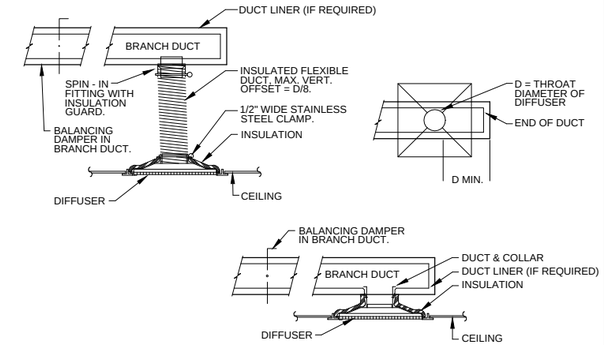

4 SUPPLY AIR DIFFUSER DETAIL
N.T.S.

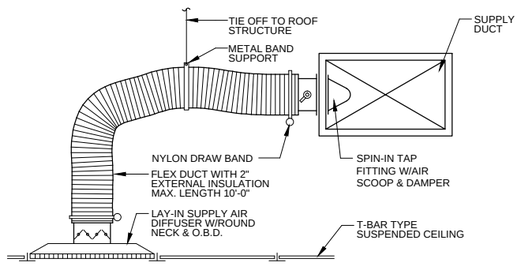

5 SUPPLY AIR DIFFUSER DETAIL
N.T.S.

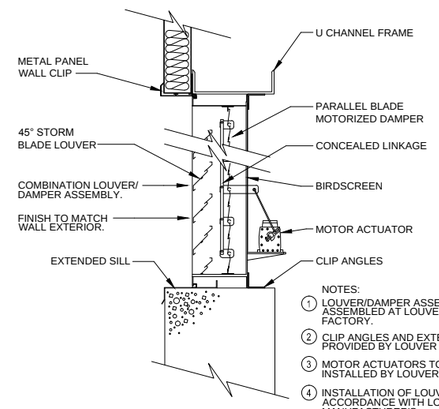

NOTES:
1. LOUVER/DAMPER ASSEMBLIES TO BE ASSEMBLED AT LOUVER MANUFACTURER FACTORY.
2. CLIP ANGLES AND EXTENDED SILL TO BE PROVIDED BY LOUVER MANUFACTURER.
3. MOTOR ACTUATORS TO BE SIZED AND INSTALLED BY LOUVER MANUFACTURER.
4. INSTALLATION OF LOUVER TO BE IN ACCORDANCE WITH LOUVER MANUFACTURER'S RECOMMENDATIONS.

6 LOUVER/DAMPER DETAIL
N.T.S.

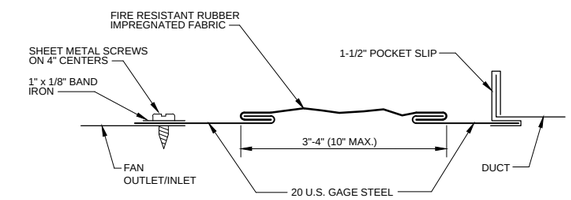

7 TYPICAL FLEXIBLE CONNECTION DETAIL
N.T.S.

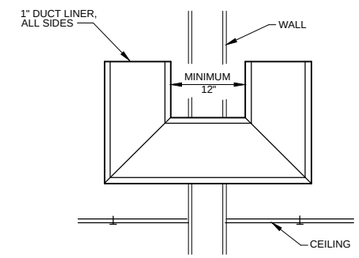

8 TRANSFER DUCT DETAIL
N.T.S.

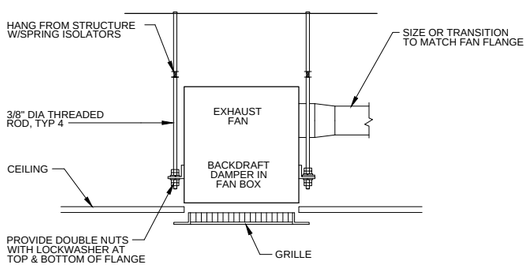

NOTE TO DESIGNER:

EXTENT OF SUPPORT IS DEPENDENT ON SIZE OF FAN AND SEISMIC ZONE

9 CEILING EXHAUST FAN
N.T.S.

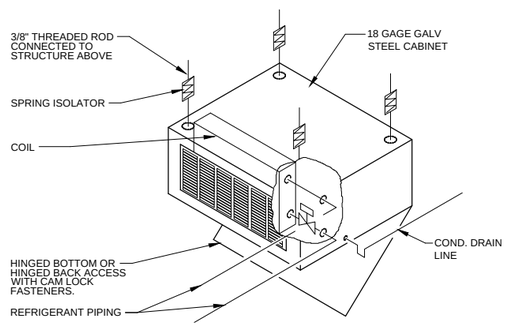

10 HORIZONTAL FAN COIL UNIT DETAIL
N.T.S.

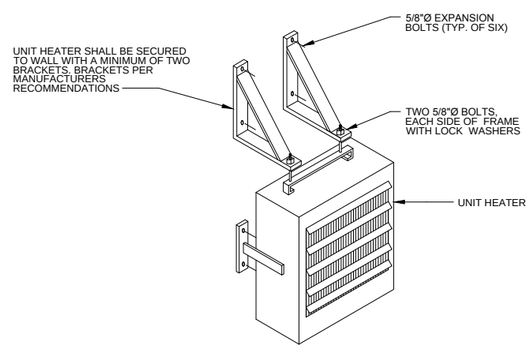

11 ELECTRIC UNIT HEATER DETAIL
N.T.S.

NO.	DATE	BY	CHECK	DESIGN	REVISION / SUBMITTAL

AECOM

LV ENGINEERING • LLC CERTIFIED WOMEN'S BUSINESS ENTERPRISE

METROPOLITAN COUNCIL

SOUTHWEST Green Line LRT Extension

90% SUBMISSION - 01/22/16

CIVIL - VOLUME 11E
STATIONS COMMON DETAILS
HVAC DETAILS

DISCIPLINE: MECHANICAL

SHEET NAME: D0-MEC-DTL-002

SHEET 106 OF 111

Jan, 16 2016 02:57 pm Z:\Projects\AECOM SWLRT west\3400_ADC\CAD\OVERALL\MECHANICAL\D0-MEC-DTL-002.dwg By: craig

LUMINAIRE SCHEDULE

TYPE	AREA	DESCRIPTION	BASIS OF DESIGN MANUFACTURERS	HOUSING	OPTICS	VOLTAGE	LAMP TYPE	DRIVER	MOUNTING	FINISH
A	IN WAITING AREA, BATHROOMS, CORRIDOR, AND LOBBY	4IN. RECESSED SQ. DOWNLIGHT SELF FLANGED CLEAR DIFFUSE REFL. 1500 LUMENS, 22W, 3000K	GOTHAM INCITO ICO SQ 35-15 4AR 40D 120	THERMALLY PROTECTED HOUSING FOR NEW CONSTRUCTION. UL LISTED FOR DRY OR DAMP. 8 IN. MAX HGT.		120	LED		RECESSED	
A1	IN STATIONS	4IN. RECESSED SQ. DOWNLIGHT SELF FLANGED CLEAR DIFFUSE REFL. 1200 LUMENS, 19W, 3000K	GOTHAM INCITO ICO SQ 35-12 4AR 40D 120	THERMALLY PROTECTED HOUSING FOR NEW CONSTRUCTION. UL LISTED FOR DRY OR DAMP. 8 IN. MAX HGT.		120	LED			
A2	IN VERTICAL CIRCULATION	4IN. RECESSED SQ. DOWNLIGHT SELF FLANGED CLEAR DIFFUSE REFL. 500 LUMENS,8W, 3000K	GOTHAM INCITO ICO SQ 35-05 4AR 40D 120	THERMALLY PROTECTED HOUSING FOR NEW CONSTRUCTION. UL LISTED FOR DRY OR DAMP. 8 IN. MAX HGT.		120	LED			
B	STATIONS PED RAMP	RECESSED STEPLIGHT 202 LUMENS, 5.5W	WINONA STEP 13 STEP13-WL-6LONG-LST2A-WHT30K-MVOLT-LSP	DIE-CAST HOUSING WITH SOLID ALUMINUM FACEPLATE PAINTED LIGHT SILVER		120-277	LED		RECESSED	SILVER
C	STATIONS	CUSTOM FIXTURE 4FT.X4FT.X28FT.					LED			
C1	STATIONS	CUSTOM FIXTURE 4FT.X1FT.X16FT.					LED			
D	STATIONS	5IN.X2FT RECESSED LENSED HIGH OUTPUT LED	PAL MLR5-HO-K30-2-OF-LOH-120	THREE PIECE EXTRUDED ALUMINUM HOUSING						
D1	VERTICAL CIRCULATION	5IN.X2FT RECESSED LENSED MEDIUM OUTPUT LED	PAL MLR5-MO-K30-2-OF-LOH-120	THREE PIECE EXTRUDED ALUMINUM HOUSING			LED			
E1	IN DRIVERS ROOM	2X2 RECESSED LED WITH CENTER CURVED RIBBED ACRYLIC DIFFUSER 3200 LUMENS, 30W, 3000K	LITHONIA 2BLT2 33L ADP LP830	20-22 Ga STEEL HOUSING PAINTED HIGH REFLECTANCE MATT WHITE			LED			
F	IN METAL CANOPY ALONG BUS PICK-UP AREA	2 1/4IN. X 3 1/2IN. X 6FT LED DIRECT BRONZE	PAL MLS2-MO-30K-6-XX-LOH-F10-UNV			120-277	LED		RECESSED	
G	BATHROOMS	31/2IN X 5 3/8IN. X 2FT LED DIRECT WALL MOUNT 770 LUMENS, 10W, 3000K	PINNACLE EDGE EVOLUTION EX-3-A-N-30-2	EXTRUDED ALUMINUM HOUSING HIGHLY REFLECTIVE WHITE PAINTED REFLECTOR DIFFUSE SNAP-IN ACRYLIC LENS W/ MATTE FINISH		120-277	LED		WALL MOUNT	
G1	VERTICAL CIRCULATION	31/2IN X 5 3/8IN. X 2FT LED DIRECT SURFACE MOUNT	PINNACLE EDGE EVOLUTION EX-3-A-N-30-2	EXTRUDED ALUMINUM HOUSING HIGHLY REFLECTIVE WHITE PAINTED REFLECTOR DIFFUSE SNAP-IN ACRYLIC LENS W/ MATTE FINISH			LED			
H	IN LRT AREA	3IN X 5IN X 6FT LED DIRECT FIXTURE SURFACE MOUNTED IN C-CHANNEL AT 12FT AFF	PAL MLS5 IP65-MO-35-6-XX-LOH-F11M-UNV			120-277	LED		SURFACE MONT IN C-CHANNEL	
J	STAIRWAYS	31/2IN X 5 3/8IN. X 4FT LED DIRECT/INDIRECT	PINNACLE EDGE EX3B-A-O-30-30-4			120-277	LED		WALL MOUNT	
J1	VERTICAL CIRCULATION	31/2IN X 5 3/8IN. X 4FT LED DIRECT/INDIRECT	PINNACLE EDGE EX3B-WET-A-O-30HO-30-4				LED			
K	MAINTENCE AND ELECTRICAL ROOMS	4FT WRAP-AROUND LED	WILLIAMS 17-4-L55_840-S-A-LED			120-277	LED		SURFACE	
L	PARKING RAMP	LED 69W PARKING RAMP FIXURE	WILLIAMS VG1-LED60_740-T5-EDD-PH-UNV		TYPE V DISTRIBUTION	120-277	LED		SURFACE	
L1	PARKING RAMP ENTRY	LED 69W PARKING RAMP FIXURE	WILLIAMS VG1-LED60_740-T3-EDD-PH-UNV		TYPE III DISTRIBUTION	120-277	LED			
M1	PARKING RAMP	TYPE V LED 140W 3@120 ON 25FT POLE	PHILIPS GARDCO ECOFORM ECF-5-135LA-6470-NW	ONE PIECE DIE CAST ALUMINUM HOUSING, ONE PIECE DIE CAST DOOR FRAME, ELECTROSTATICALLY APPLIED POWDER COAT FINISH, IP66 RATED, 120-277V	TYPE V DISTRIBUTION	120-277	LED		POLE MOUNT	
N		4FT. WALL MOUNT WALLWASH 31W 1800 LUMENS	LUMENPULSE LUMENFACADE LOG-RO-120-48-40K-WWLF-SI-NO				LED			
P	BRIDGE LIGHT	4FT. 53W SURFACE MOUNT 3,120 LUMENS	i2 SYSTEMS GEN2 V2355A-48CBB-82DEG.				LED			
P1	STATIONS PED WALKWAY & STATIONS LANTERN	4FT 28W WALL MOUNT 1,560 LUMENS	i2 SYSTEMS GEN2 V2355B-48CBB-82DEG.				LED			
P2	VERTICAL CIRCULATION LANTERN	2FT. 26W WALL MOUNT 1,560 LUMENS	i2 SYSTEMS GEN2 V2355A-28CAB-82DEG.				LED			
P3	VERTICAL CIRCULATION LANTERN	3FT. 39W WALL MOUNT 2,340 LUMENS	i2 SYSTEMS GEN2 V2355A-38CAB-30DEG.				LED			
P4	VERTICAL CIRCULATION EXTERIOR WALLS	4FT. 55W WALL MOUNT WALL GRAZER	i2 SYSTEMS GEN2 V2355A-41CAB-10DEG.				LED			
Q	IN WAITING AREA UNDER WOOD SLAT CEILING	3 1/2IN. x 5 3/8IN. X 6FT LED DIRECT/INDIRECT BRONZE	PINNACLE EDGE EVOLUTION EX3B-A-O-35-35-6-BR				LED			

NO.	DATE	BY	CHECK	DESIGN	REVISION / SUBMITTAL

AECOM

M-P CONSULTANTS
CONSULTING ENGINEERING
MINNEAPOLIS • MINNESOTA

90% SUBMISSION - 01/22/16

METROPOLITAN COUNCIL

SOUTHWEST Green Line LRT Extension

CIVIL - VOLUME 11E
STATIONS COMMON DETAILS
ELECTRICAL
LUMINAIRE SCHEDULE

DISCIPLINE: ELECTRICAL

SHEET NAME: D0-ELE-SCH-501

Jan, 20 2016 06:59 am V:\3400_ADC\CAD\OVERALL\PLAN SHEETS\ELECTRICAL\ELE-SCH-501.dwg By: V-BegeJB

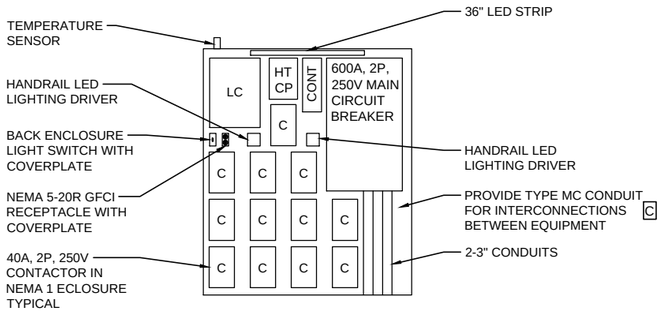

1 BACK ELEVATION

SCALE: N.T.S.

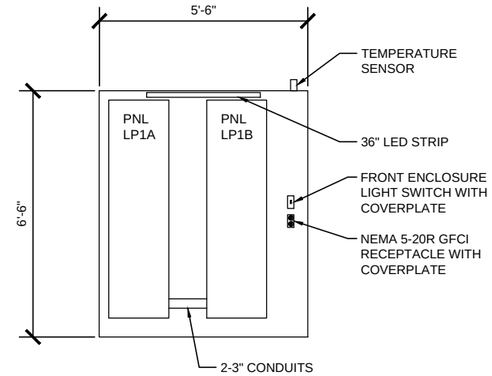

2 FRONT ELEVATION

SCALE: N.T.S.

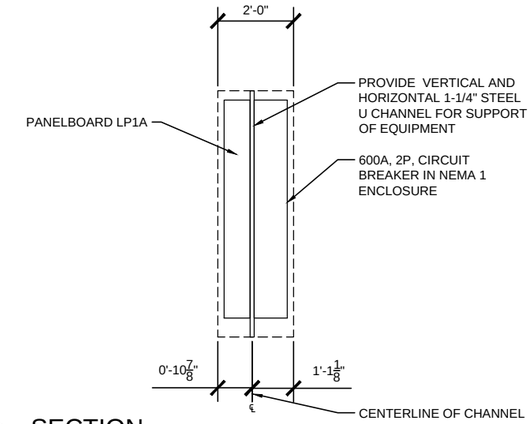

3 SECTION

SCALE: N.T.S.

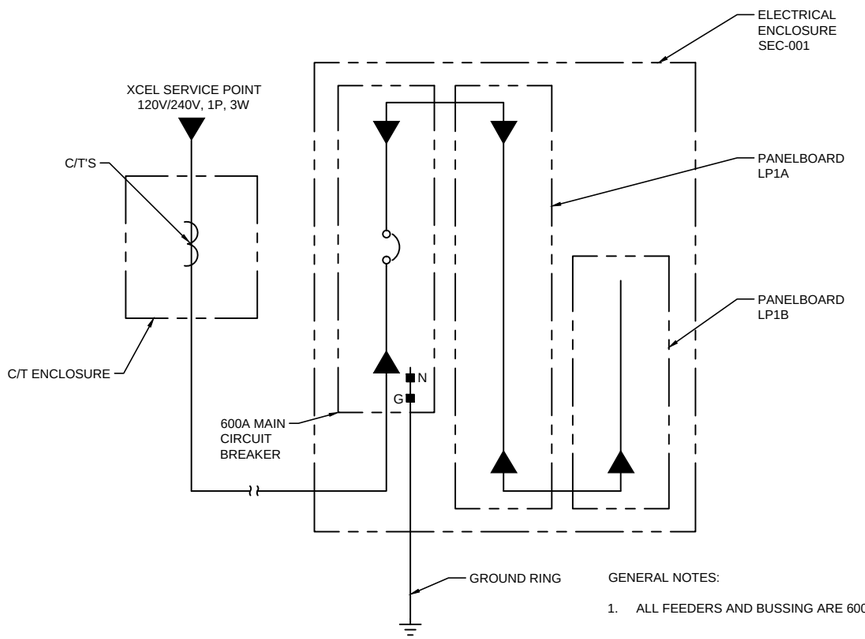

GENERAL NOTES:

1. ALL FEEDERS AND BUSSING ARE 600A.

4 ELECTRICAL SERVICE ONE LINE DIAGRAM

SCALE: N.T.S.

NO.	DATE	BY	CHECK	DESIGN	REVISION / SUBMITTAL

AECOM

M-P Consultants
CONSULTING ENGINEERING
MINNEAPOLIS • MINNESOTA

90% SUBMISSION - 01/22/16

METROPOLITAN COUNCIL

SOUTHWEST Green Line LRT Extension

CIVIL - VOLUME 11E
STATIONS COMMON DETAILS
ELECTRICAL DETAILS
1 OF 4

DISCIPLINE: ELECTRICAL

SHEET NAME: D0-ELE-DTL-603

SHEET 108 OF 111

Jan, 20 2016 06:59 am V:\3400_ADC\CAD\OVERALL\PLAN SHEETS\ELECTRICAL\ELE-DTL-603.dwg By: V-BegeJB

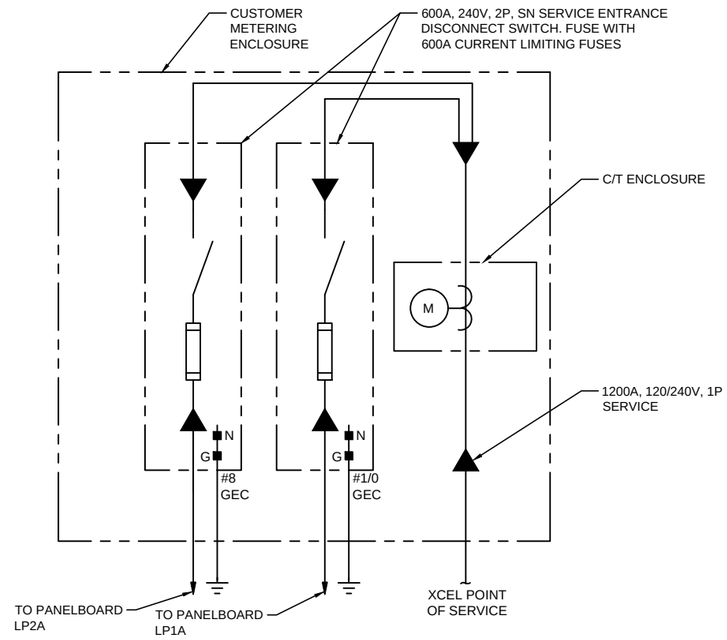

1 PLATFORM ONE LINE DIAGRAM

SCALE: N.T.S.

120/240V, 1P SERVICE

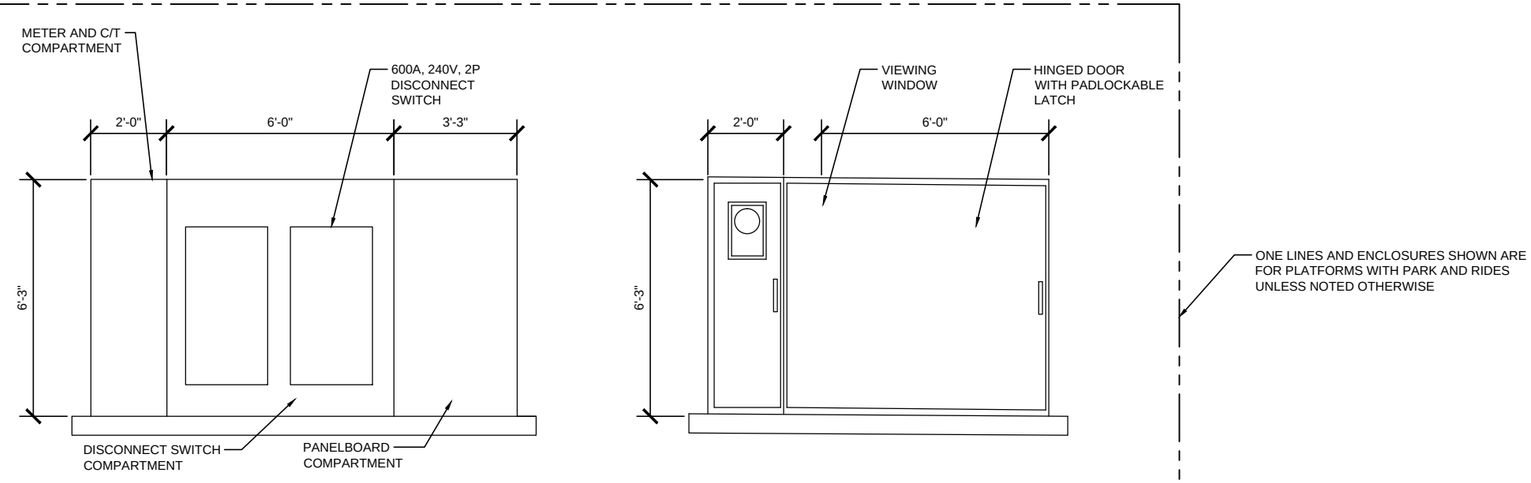

NOTE: CUSTOMER METERING ENCLOSURES ARE FREE STANDING NEMA 3R, 12GA, 316L STAINLESS STEEL ENCLOSURE. ENCLOSURE IS 2' DEEP. ON 6" CONCRETE SLAB. PAD SHALL EXTEND 3" OUT FROM ALL SIDES OF THE ENCLOSURE.

2 CUSTOMER METERING ENCLOSURE DETAIL

SCALE: N.T.S.

NO.	DATE	BY	CHECK	DESIGN	REVISION / SUBMITTAL

AECOM

M-P CONSULTANTS
CONSULTING ENGINEERING
MINNEAPOLIS • MINNESOTA

90% SUBMISSION - 01/22/16

METROPOLITAN COUNCIL

SOUTHWEST Green Line LRT Extension

CIVIL - VOLUME 11E
STATIONS COMMON DETAILS
ELECTRICAL DETAILS
2 OF 4

DISCIPLINE: ELECTRICAL

SHEET NAME: D0-ELE-DTL-604

SHEET 109 OF 111

Jan. 20 2016 06:59 am V:\3400_ADC\CAD\OVERALL\PLAN SHEETS\ELECTRICAL\ELE-DTL-604.dwg By: V-Begeub

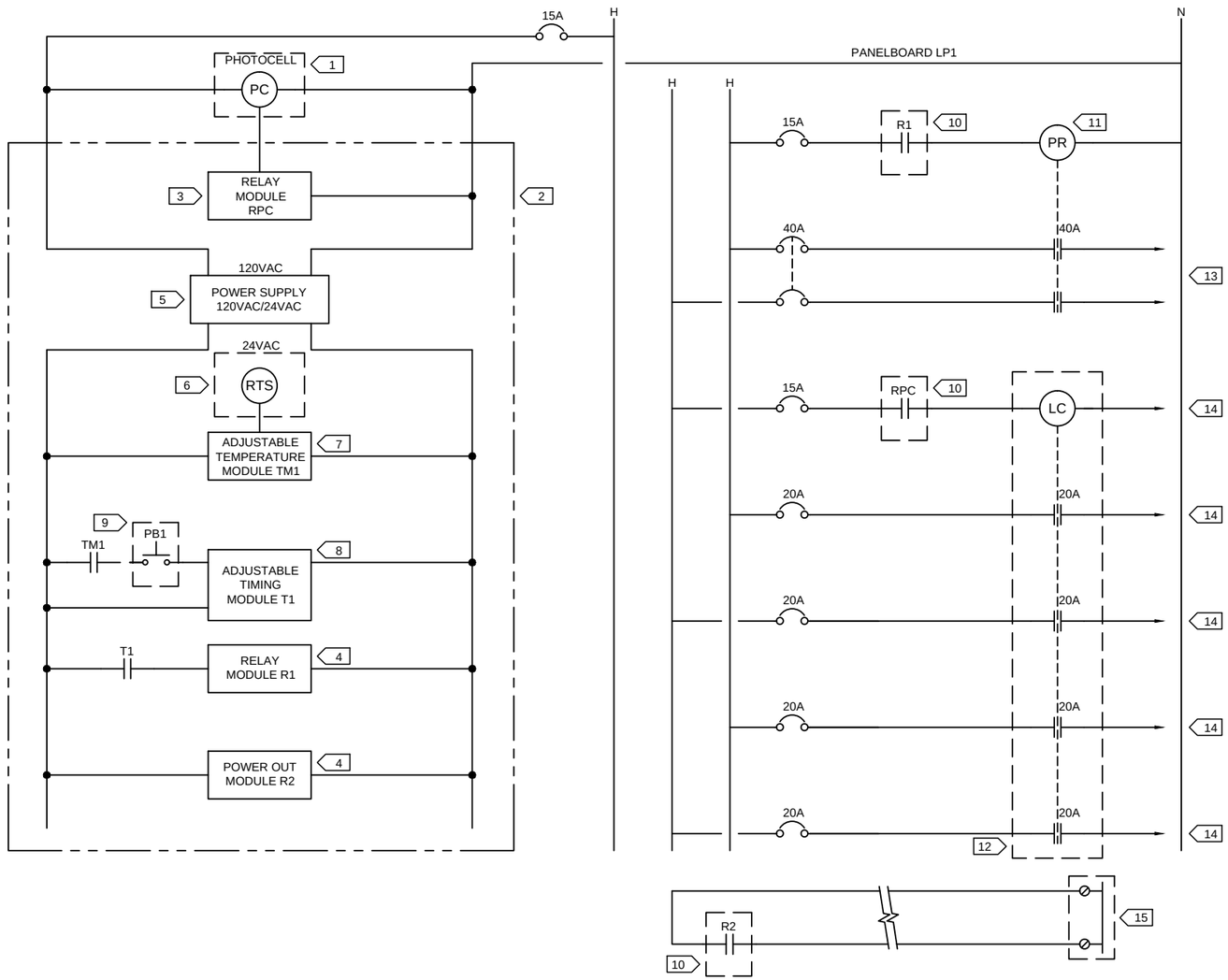

KEYNOTES:

1. PHOTOCELL WITH CAST ALUMINUM HOUSING, REMOTE MOUNT AT LOCATION WITH MINIMAL NIGHT LIGHTING.
2. DIN RAIL MOUNTED MODULES. LOCATED IN THE ELECTRICAL ENCLOSURE.
3. SOLID STATE SPST RELAY, 120VAC INPUT/OUTPUT. PROVIDE CONTACT RATINGS FOR LOADS INDICATED.
4. SOLID STATE SPST RELAY, 24VAC INPUT/OUTPUT. PROVIDE CONTACT RATINGS FOR LOADS INDICATED.
5. SOLID STATE POWER SUPPLY, 120VAC IN 24VAC OUT.
6. HERMETICALLY SEALED TEMPERATURE SENSOR. MOUNT ON TOP OF ENCLOSURE. PROVIDE PROTECTIVE METAL HOUSING.
7. SOLID STATE ADJUSTABLE TEMPERATURE MODULE. PROVIDE WITH BRACKET AND SOCKET FOR DIN RAIL MOUNTING.
8. SOLID STATE, DELAYED TIME, TIMER. PROVIDE TOTAL OF 12 TIMERS.
9. 16MM 5/8" ANTI-VANDAL MOMENTARY STAINLESS STEEL METAL PUSH BUTTON SWITCH WITH SCREW TERMINALS. MOUNT IN PASSENGER SHELTER COLUMN WITH STAINLESS STEEL COVERPLATE. PROVIDE TOTAL OF 12 PUSH BUTTONS AND COVERPLATES.
10. CONTACTS LOCATED AT DIN RAIL MOUNTED RELAY MODULES.
11. 40A, 2P, 250V MECHANICALLY HELD, LATCHING TYPE, 2 WIRE CONTROL, NEMA 1 ENCLOSURE, PANEL MOUNTED CONTACTOR. PROVIDE TOTAL OF 12 CONTACTORS.
12. 20A, 4 POLE, 250V MECHANICALLY HELD, LATCHING TYPE, 2 WIRE CONTROL, NEMA 1 ENCLOSURE, PANEL MOUNTED LIGHTING CONTACTOR.
13. TO RADIANT HEATERS.
14. TO LUMINAIRES.
15. TO SCADA TERMINALS ON PLC. LOCATED IN COMMUNICATIONS CABINET SCC-001, VERIFY TERMINALS.

1 PLATFORM CONTROL WIRING DETAIL

SCALE: N.T.S.

NO.	DATE	BY	CHECK	DESIGN	REVISION / SUBMITTAL

AECOM

M-P CONSULTANTS
CONSULTING ENGINEERING
MINNEAPOLIS • MINNESOTA

90% SUBMISSION - 01/22/16

METROPOLITAN COUNCIL

SOUTHWEST Green Line LRT Extension

CIVIL - VOLUME 11E
STATIONS ELECTRICAL DETAILS
ELECTRICAL DETAILS
3 OF 4

DISCIPLINE: ELECTRICAL

SHEET NAME: D0-ELE-DTL-605

SHEET 110 OF 111

Jan. 20 2016 06:59 am V:\3400_ADC\CAD\OVERALL\PLAN SHEETS\ELECTRICAL\ELE-DTL-605.dwg By: V-Bege.JB

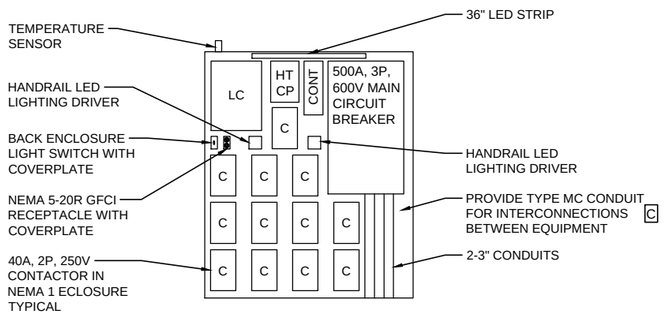

1 BACK ELEVATION

SCALE: N.T.S.

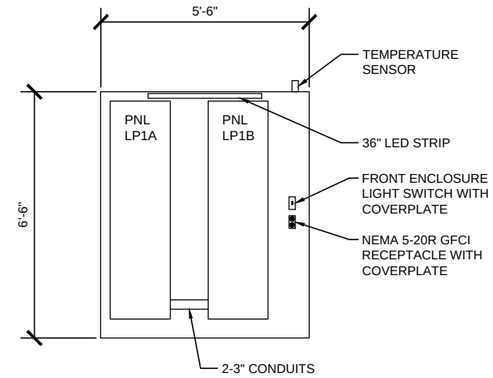

2 FRONT ELEVATION

SCALE: N.T.S.

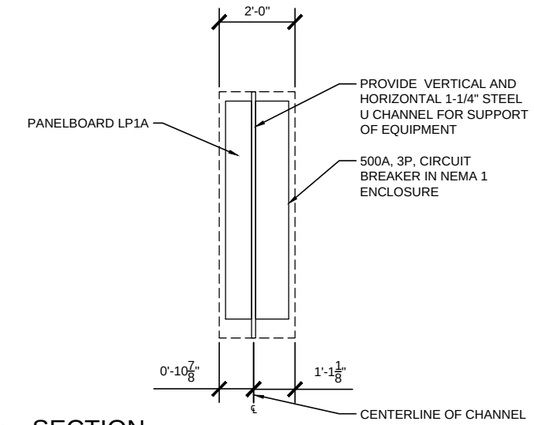

3 SECTION

SCALE: N.T.S.

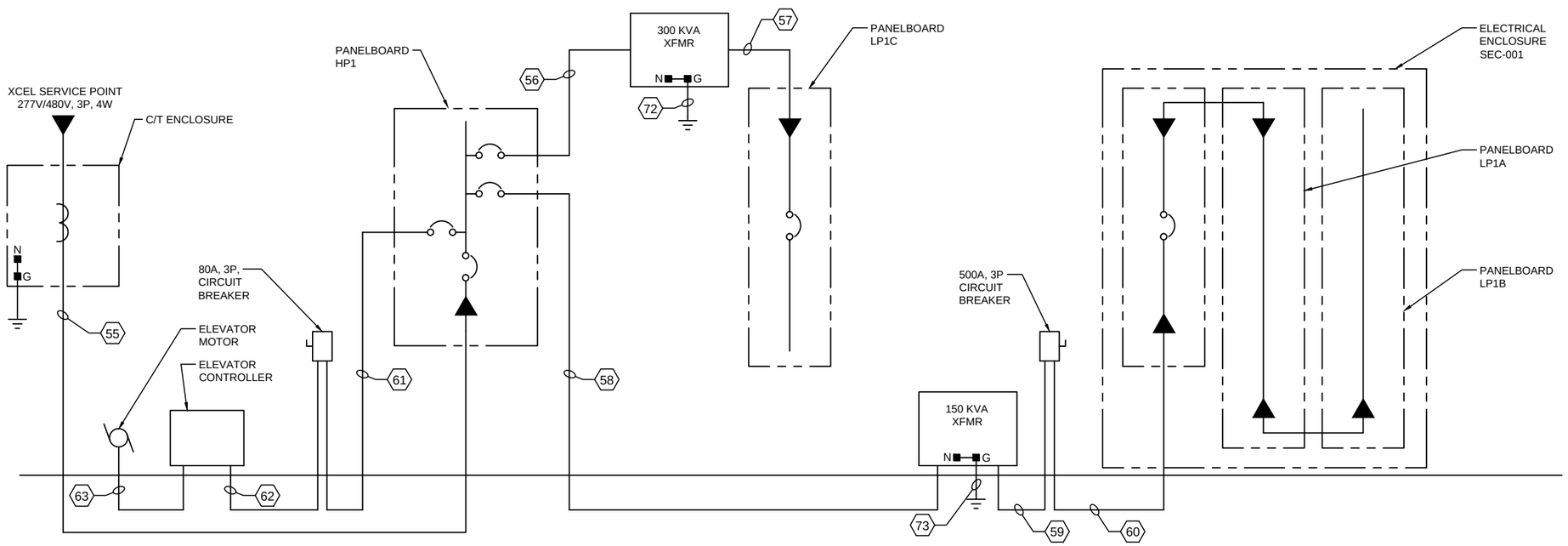

GENERAL NOTES:

1. SEE PANELBOARD SCHEDULES ON SHEET 502 FOR PANELBOARD VOLTAGE, AMPACITY AND PHASE.
2. SEE VAN WHITE CONDUIT AND WIRE SCHEDULE ON SHEET 501 FOR CONDUIT AND WIRE SIZES FOR TAGS INDICATED.

4 ELECTRICAL SERVICE ONE LINE DIAGRAM

SCALE: N.T.S.

NO.	DATE	BY	CHECK	DESIGN	REVISION / SUBMITTAL

AECOM

M-P Consultants
CONSULTING ENGINEERING
MINNEAPOLIS • MINNESOTA

90% SUBMISSION - 01/22/16

METROPOLITAN COUNCIL

SOUTHWEST Green Line LRT Extension

CIVIL - VOLUME 11E
STATIONS COMMON DETAILS
ELECTRICAL DETAILS
4 OF 4

DISCIPLINE: ELECTRICAL

SHEET NAME: D0-ELE-DTL-606

SHEET 111 OF 111

Jan, 20 2016 06:59 am V:\3400_ADC\CAD\OVERALL\PLAN SHEETS\ELECTRICAL\ELE-DTL-606.dwg By: V-Begeal B