METROPOLITAN COUNCIL

SOUTHWEST
Green Line LRT Extension

CIVIL CONSTRUCTION

VOLUME 4G
BRIDGES

PLAN PACKAGE INDEX / DESCRIPTION	
CIVIL CONSTRUCTION	BID ALTERNATES
VOLUME 1 - EXISTING CONDITIONS & REMOVALS	VOLUME A - NOT USED
VOLUME 2A - CIVIL	VOLUME B - NOT USED
VOLUME 2B - CIVIL	VOLUME C - BID ALTERNATE 3 (LRCI 5) ▲
VOLUME 3A - TRACKWORK	VOLUME D - BID ALTERNATE 4 (LRCI 6) ▲
VOLUME 3B - TRACKWORK	VOLUME E - BID ALTERNATE 5 (LRCI 7) ▲
VOLUME 3C - TRACKWORK DETAILS	VOLUME F - BID ALTERNATE 6 (LRCI 8) ▲
VOLUME 4A - BRIDGES	VOLUME G - BID ALTERNATE 7 (LRCI 4) ▲
VOLUME 4B - BRIDGES	VOLUME H - BID ALTERNATE 8 (LRCI 10) ▲
VOLUME 4C - BRIDGES	VOLUME I - BID ALTERNATE 9 (LRCI 11) ▲
VOLUME 4D - BRIDGES	VOLUME J - BID ALTERNATE 10 (LRCI 12)
VOLUME 4E - BRIDGES	VOLUME K - BID ALTERNATE 11 (LRCI 13)
VOLUME 4F - BRIDGES	VOLUME L - BID ALTERNATE 12 (LRCI 14)
VOLUME 4G - BRIDGES	VOLUME M - BID ALTERNATE 13 (LRCI 26)
VOLUME 5 - TUNNELS	VOLUME N - BID ALTERNATE 14 (LRCI 27)
VOLUME 6 - RETAINING WALLS	VOLUME O - BID ALTERNATE 15 (LRCI 17)
VOLUME 7 - UTILITIES	VOLUME P - BID ALTERNATE 20 (LRCI 32)
VOLUME 8 - DRAINAGE	VOLUME Q - BID ALTERNATE 21 (LRCI 33)
VOLUME 9 - URBAN DESIGN / LANDSCAPE	
VOLUME 10A - TRAFFIC	
VOLUME 10B - LIGHTING *	
VOLUME 11A - STATIONS ▲	
VOLUME 11B - STATIONS	
VOLUME 11C - STATIONS	
VOLUME 11D - STATIONS	
VOLUME 11E - STATIONS	
VOLUME 12 - SYSTEMS	

* TO BE SUBMITTED AT A LATER DATE
▲ SUBMITTED AT 75%, NOT INCLUDED IN 90%

THE PROPOSED SOUTHWEST LRT PROJECT IS NOT FINAL BUT IS STILL UNDER ENVIRONMENTAL REVIEW AND THE PROJECT IS SUBJECT TO CHANGE. THESE PLANS ARE NOT FINAL.

THE COUNCIL, THROUGH THE DEVELOPMENT OF THESE PLANS, DOES NOT INTEND THAT THEY WILL PREJUDICE OR COMPROMISE ANY STATE OR FEDERAL ENVIRONMENTAL REVIEW OR OTHER LEGAL REQUIREMENTS. THESE PLANS DO NOT LIMIT THE PROJECT DESIGN ALTERNATIVES OR MITIGATIVE MEASURES THAT THE COUNCIL MAY UNDERTAKE IF THE PROPOSED SWLRT PROJECT PROCEEDS TO CONSTRUCTION.

THE COUNCIL WILL NOT TAKE FINAL ACTION ON THIS MATTER UNLESS THE COUNCIL PROCEEDS WITH THE PROJECT AFTER THE FTA'S RECORD OF DECISION AND THE COUNCIL'S DETERMINATION OF ADEQUACY.

WARNING: THIS RECORD MAY CONTAIN SENSITIVE SECURITY INFORMATION THAT IS CONTROLLED UNDER 49 CFR PARTS 15 AND 1520. NO PART OF THIS RECORD MAY BE DISCLOSED TO PERSONS WITHOUT A "NEED TO KNOW", AS DEFINED IN 49 CFR PARTS 15 AND 1520, EXCEPT WITH THE WRITTEN PERMISSION OF THE ADMINISTRATOR OF THE TRANSPORTATION SECURITY ADMINISTRATION OR THE SECRETARY OF TRANSPORTATION. UNAUTHORIZED RELEASE MAY RESULT IN CIVIL PENALTY OR OTHER ACTION. FOR U.S. GOVERNMENT AGENCIES, PUBLIC DISCLOSURE IS GOVERNED BY 5 U.S.C. 552 AND 49 CFR PARTS 15 AND 1520.

90% SUBMISSION
DATE : 01/22/16

AECOM

CIVIL CONSTRUCTION

SHT #	SHEET NAME	SHEET DESCRIPTION	STATION	STATION	REV
		VOLUME 4G - BRIDGES			
1	00-GEN-CVR-001	COVER SHEET			
2	00-GEN-IDX-001	VOLUME INDEX OF PLAN SHEETS SHEET 1			
3	00-GEN-IDX-002	VOLUME INDEX OF PLAN SHEETS SHEET 2			
4	00-GEN-IDX-003	VOLUME INDEX OF PLAN SHEETS SHEET 3			
5	W0-GEN-KEY-001	GENERAL KEY MAP SHEET 1			
6	E0-GEN-KEY-002	GENERAL KEY MAP SHEET 2			
7	00-GEN-NTS-001	GENERAL NOTES, ABBREVIATIONS, AND SYMBOLS SHEET 1			
8	00-GEN-NTS-002	GENERAL NOTES, ABBREVIATIONS, AND SYMBOLS SHEET 2			
		LUCE LINE TRAIL - BRIDGE R0696			
1	CBR0696-BRG-GPE-001	KEY PLAN			
2	CBR0696-BRG-GPE-002	GENERAL PLAN AND ELEVATION 1			
3	CBR0696-BRG-GPE-003	GENERAL PLAN AND ELEVATION 2			
4	CBR0696-BRG-TRN-001	TRANSVERSE SECTION AND QUANTITIES			
5	CBR0696-BRG-SUP-001	BRIDGE LAYOUT 1			
6	CBR0696-BRG-ABT-001	ABUTMENT AESTHETIC DETAILS			
7	CBR0696-BRG-ABT-002	WEST ABUTMENT DETAILS 1			
8	CBR0696-BRG-ABT-003	WEST ABUTMENT DETAILS 3			
9	CBR0696-BRG-ABT-004	WEST ABUTMENT DETAILS 4			
10	CBR0696-BRG-ABT-005	WEST ABUTMENT DETAILS 5			
11	CBR0696-BRG-ABT-006	WEST ABUTMENT REINFORCEMENT 1			
12	CBR0696-BRG-ABT-007	WEST ABUTMENT REINFORCEMENT 2			
13	CBR0696-BRG-ABT-008	WEST ABUTMENT REINFORCEMENT 3			
14	CBR0696-BRG-ABT-009	WEST ABUTMENT REINFORCEMENT 4			
15	CBR0696-BRG-ABT-011	EAST ABUTMENT DETAILS 1			
16	CBR0696-BRG-ABT-012	EAST ABUTMENT DETAILS 2			
17	CBR0696-BRG-ABT-013	EAST ABUTMENT DETAILS 3			
18	CBR0696-BRG-ABT-014	EAST ABUTMENT REINFORCEMENT 1			
19	CBR0696-BRG-ABT-015	EAST ABUTMENT REINFORCEMENT 2			
20	CBR0696-BRG-ABT-016	EAST ABUTMENT REINFORCEMENT 3			
21	CBR0696-BRG-ABT-017	EAST ABUTMENT REINFORCEMENT 4			
22	CBR0696-BRG-PIR-001	PIER 1 DETAILS			
23	CBR0696-BRG-PIR-002	PIER 1 REINFORCEMENT			
24	CBR0696-BRG-PIR-003	PIER 2 DETAILS			
25	CBR0696-BRG-PIR-004	PIER 2 REINFORCEMENT			
26	CBR0696-BRG-PIR-005	PIER 3 DETAILS			
27	CBR0696-BRG-PIR-006	PIER 3 REINFORCEMENT			
28	CBR0696-BRG-PIR-007	PIER 4 DETAILS			
29	CBR0696-BRG-PIR-008	PIER 4 REINFORCEMENT			
30	CBR0696-BRG-PIR-009	PIER 5 DETAILS 1			
31	CBR0696-BRG-PIR-010	PIER 5 DETAILS 2			
32	CBR0696-BRG-PIR-011	PIER 5 REINFORCEMENT 1			
33	CBR0696-BRG-PIR-012	PIER 5 REINFORCEMENT 2			
34	CSR0696-BRG-PIR-013	PIER 5 REINFORCEMENT 3			
35	CBR0696-BRG-PIR-014	PIER 6 DETAILS			
36	CBR0696-BRG-PIR-015	PIER 6 REINFORCEMENT			
37	CBR0696-BRG-PIR-016	SUBSTRUCTURE REINFORCEMENT 1			
38	CBR0696-BRG-PIR-017	SUBSTRUCTURE REINFORCEMENT 2			
39	CBR0696-BRG-SUP-003	CORNER DETAILS			
40	CBR0696-BRG-SUP-004	SUPERSTRUCTURE DETAILS 1			
41	CBR0696-BRG-SUP-005	SUPERSTRUCTURE DETAILS 2			
42	CBR0696-BRG-SUP-006	SUPERSTRUCTURE DETAILS 3			
43	CBR0696-BRG-DTL-001	END DIAPHRAGM DETAILS			
44	CBR0696-BRG-SUP-007	PREFABRICATED TRUSS			
45	CBR0696-BRG-DTL-002	CURB DETAILS 1			
46	CBR0696-BRG-DTL-003	CURB DETAILS 2			
47	CBR0696-BRG-DTL-004	APPROACH PANEL DETAILS			
48	CBR0696-BRG-DTL-005	SUPERSTRUCTURE REINFORCEMENT			
49	CBR0696-BRG-DTL-006	WIRE FENCE			
50	CBR0696-BRG-DTL-007	NORTHEAST WINGWALL RAILING DETAILS			
51	CBR0696-BRG-DTL-008	DRAINAGE SYSTEM DETAILS			
52	CBR0696-BRG-DTL-009	WATERPROOF EXPANSION DEVICE			
53	CBR0696-BRG-DTL-010	BEARING DETAILS			
54	CBR0696-BRG-DTL-011	AS-BUILT BRIDGE DATA			
55	CBR0696-BRG-DTL-012	BRIDGE DETAILS 1			
56	CBR0696-BRG-DTL-013	BRIDGE DETAILS 2			
57	CBR0696-BRG-SUR-001	BRIDGE SURVEY 1			
58	CBR0696-BRG-SUR-002	BRIDGE SURVEY 2			
59	CBR0696-BRG-SUR-003	BRIDGE SURVEY 3			
60	CBR0696-BRG-BOR-001	BRIDGE SURVEY PLAN			

CIVIL CONSTRUCTION

SHT #	SHEET NAME	SHEET DESCRIPTION	STATION	STATION	REV
61	CBR0696-BRG-BOR-002	BRIDGE SURVEY PROFILE 1			
62	CBR0696-BRG-BOR-003	BRIDGE SURVEY PROFILE 2			
63	CBR0696-BRG-BOR-004	BRIDGE SURVEY PROFILE 3			
64	CBR0696-BRG-SUP-008	STAGING PLAN 1			
65	CBR0696-BRG-SUP-009	STAGING PLAN 2			
66	CBR0696-BRG-SUP-010	STAGING PLAN 3			
67	CBR0696-BRG-SUP-011	STAGING PLAN 4			
		VAN WHITE BLVD BRIDGE MODIFICATIONS - BRIDGE 27B01			
1	EX4-STU-PPR-VWMB-VEH-GPE-001	GENERAL PLAN AND ELEVATION			
2	EX4-STU-PPR-VWMB-VEH-DTL-002	SCHEDULE OF QUANTITIES			
3	EX4-STU-PPR-VWMB-VEH-PIR-001	DETAILS			
4	EX4-STU-PPR-VWMB-VEH-PIR-002	REINFORCEMENT			
5	EX4-STU-PPR-VWMB-VEH-PIR-003	AESTHETIC DETAILS			
6	CBR27B01-BRM-GPE-001	EXISTING GENERAL PLAN AND SECTION			
7	CBR27B01-BRM-DTL-001	REMOVAL DETAILS			
8	CBR27B01-BRM-DTL-002	PARAPET REMOVAL AND RAIL DETAILS			
9	CBR27B01-BRM-DTL-003	CONDUIT SYSTEM			
10	CBR27B01-BRM-DTL-004	AS-BUILT BRIDGE DATA			
		I-94 PIER PROTECTION - BRIDGES 27725-27729			
1	EX4-STU-PPR-ALL94-VEH-GPE-001	GENERAL PLAN			
2	EX4-STU-PPR-ALL94-VEH-GPE-002	GENERAL ELEVATION AND DETAILS			
3	EX4-STU-PPR-ALL94-VEH-PIR-001	BRIDGE 27726 DETAILS			
4	EX4-STU-PPR-ALL94-VEH-PIR-002	BRIDGE 27726 REINFORCEMENT			
5	EX4-STU-PPR-ALL94-VEH-PIR-003	BRIDGE 27726 AESTHETIC DETAILS			
6	EX4-STU-PPR-ALL94-VEH-PIR-004	BRIDGE 27727 DETAILS 1			
7	EX4-STU-PPR-ALL94-VEH-PIR-005	BRIDGE 27727 DETAILS 2			
8	EX4-STU-PPR-ALL94-VEH-PIR-006	BRIDGE 27727 REINFORCEMENT 1			
9	EX4-STU-PPR-ALL94-VEH-PIR-007	BRIDGE 27727 REINFORCEMENT 2			
10	EX4-STU-PPR-ALL94-VEH-PIR-008	BRIDGE 27727 AESTHETIC DETAILS			
11	EX4-STU-PPR-ALL94-VEH-PIR-009	BRIDGE 27729 DETAILS			
12	EX4-STU-PPR-ALL94-VEH-PIR-010	BRIDGE 27729 REINFORCEMENT			
13	EX4-STU-PPR-ALL94-VEH-PIR-011	BRIDGE 27729 AESTHETIC DETAILS			
		LRT OVER BNSF - BRIDGE R0697			
1	CBRR0697-BRG-GPE-001	KEY PLAN AND ELEVATION			
2	CBRR0697-BRG-GPE-002-1	GENERAL PLAN AND ELEVATION 1			
3	CBRR0697-BRG-GPE-002-2	GENERAL PLAN AND ELEVATION 2			
4	CBRR0697-BRG-TRN-001-1	SCHEDULE OF QUANTITIES			
5	CBRR0697-BRG-TRN-001-2	STRAY CURRENT NOTES			
6	CBRR0697-BRG-TRN-001-3	TRANSVERSE SECTION 1			
7	CBRR0697-BRG-TRN-001-4	TRANSVERSE SECTION 2			
8	CBRR0697-BRG-SUP-001-1	BRIDGE LAYOUT 1			
9	CBRR0697-BRG-SUP-001-2	BRIDGE LAYOUT 2			
10	CBRR0697-BRG-SUP-001-3	BRIDGE LAYOUT 3			
11	CBRR0697-BRG-ABT-001-1	SOUTH ABUTMENT DETAILS 1			
12	CBRR0697-BRG-ABT-001-2	SOUTH ABUTMENT DETAILS 2			
13	CBRR0697-BRG-ABT-001-3	SOUTH ABUTMENT DETAILS 3			
14	CBRR0697-BRG-ABT-001-4	SOUTH ABUTMENT DETAILS 4			
15	CBRR0697-BRG-ABT-001-5	SOUTH ABUTMENT REINFORCEMENT 1			
16	CBRR0697-BRG-ABT-001-6	SOUTH ABUTMENT REINFORCEMENT 2			
17	CBRR0697-BRG-ABT-001-7	SOUTH ABUTMENT REINFORCEMENT 3			
18	CBRR0697-BRG-ABT-001-8	SOUTH ABUTMENT REINFORCEMENT 4			
19	CBRR0697-BRG-ABT-002-1	NORTH ABUTMENT DETAILS 1			
20	CBRR0697-BRG-ABT-002-2	NORTH ABUTMENT DETAILS 2			
21	CBRR0697-BRG-ABT-002-3	NORTH ABUTMENT DETAILS 3			
22	CBRR0697-BRG-ABT-002-4	NORTH ABUTMENT DETAILS 4			
23	CBRR0697-BRG-ABT-002-5	NORTH ABUTMENT DETAILS 5			
24	CBRR0697-BRG-ABT-002-6	NORTH ABUTMENT DETAILS 6			
25	CBRR0697-BRG-ABT-002-7	NORTH ABUTMENT REINFORCEMENT 1			
26	CBRR0697-BRG-ABT-002-8	NORTH ABUTMENT REINFORCEMENT 2			
27	CBRR0697-BRG-ABT-002-9	NORTH ABUTMENT REINFORCEMENT 3			
28	CBRR0697-BRG-ABT-002-10	NORTH ABUTMENT REINFORCEMENT 4			
29	CBRR0697-BRG-PIR-001-1	PIER 1, 2, AND 3 DETAILS 1			
30	CBRR0697-BRG-PIR-001-2	PIER 1, 2, AND 3 DETAILS 2			
31	CBRR0697-BRG-PIR-001-3	PIER 1, 2, AND 3 REINFORCEMENT 1			
32	CBRR0697-BRG-PIR-001-4	PIER 1, 2, AND 3 REINFORCEMENT 2			
33	CBRR0697-BRG-PIR-001-5	PIER 4 AND 5 DETAILS 1			
34	CBRR0697-BRG-PIR-001-6	PIER 4 AND 5 DETAILS 2			
35	CBRR0697-BRG-PIR-001-7	PIER 4 AND 5 DETAILS 3			
36	CBRR0697-BRG-PIR-001-7	PIER 4 AND 5 REINFORCEMENT 1			
37	CBRR0697-BRG-PIR-001-8	PIER 4 AND 5 REINFORCEMENT 2			

CIVIL CONSTRUCTION

SHT #	SHEET NAME	SHEET DESCRIPTION	STATION	STATION	REV
38	CBRR0697-BRG-PIR-001-9	PIER 6 AND 7 DETAILS 1			
39	CBRR0697-BRG-PIR-001-10	PIER 6 AND 7 DETAILS 2			
40	CBRR0697-BRG-PIR-001-11	PIER 6 AND 7 REINFORCEMENT 1			
41	CBRR0697-BRG-PIR-001-12	PIER 6 AND 7 REINFORCEMENT 2			
42	CBRR0697-BRG-PIR-001-13	PIER 8 DETAILS 1			
43	CBRR0697-BRG-PIR-001-14	PIER 8 DETAILS 2			
44	CBRR0697-BRG-PIR-001-15	PIER 8 REINFORCEMENT 1			
45	CBRR0697-BRG-PIR-001-16	PIER 8 REINFORCEMENT 2			
46	CBRR0697-BRG-PIR-001-17	PIER 9 DETAILS 1			
47	CBRR0697-BRG-PIR-001-18	PIER 9 DETAILS 2			
48	CBRR0697-BRG-PIR-001-19	PIER 9 REINFORCEMENT 1			
49	CBRR0697-BRG-PIR-001-20	PIER 9 REINFORCEMENT 2			
50	CBRR0697-BRG-SUP-002-1	FRAMING PLAN 1			
51	CBRR0697-BRG-SUP-002-3	FRAMING PLAN 2			
52	CBRR0697-BRG-SUP-002-3	FRAMING PLAN 3			
53	CBRR0697-BRG-PCB-001-1	MN54" PRESTRESSED CONCRETE BEAM 1			
54	CBRR0697-BRG-PCB-001-2	MN54" PRESTRESSED CONCRETE BEAM 2			
55	CBRR0697-BRG-PCB-001-3	MN54" PRESTRESSED CONCRETE BEAM 3			
56	CBRR0697-BRG-PCB-001-4	MN54" PRESTRESSED CONCRETE BEAM 4			
57	CBRR0697-BRG-GIR-001-1	CONCRETE GIRDER DETAILS 1			
58	CBRR0697-BRG-GIR-001-2	CONCRETE GIRDER DETAILS 2			
59	CBRR0697-BRG-GIR-001-3	CONCRETE GIRDER DETAILS 3			
60	CBRR0697-BRG-GIR-001-4	CONCRETE GIRDER DETAILS 4			
61	CBRR0697-BRG-GIR-001-5	CONCRETE GIRDER DETAILS 5			
62	CBRR0697-BRG-GIR-001-6	CONCRETE GIRDER DETAILS 6			
63	CBRR0697-BRG-GIR-001-7	CONCRETE GIRDER DETAILS 7			
64	CBRR0697-BRG-GIR-001-8	CONCRETE GIRDER DETAILS 8			
65	CBRR0697-BRG-GIR-001-9	CONCRETE GIRDER DETAILS 9			
66	CBRR0697-BRG-GIR-001-10	CONCRETE GIRDER DETAILS 10			
67	CBRR0697-BRG-SUP-003-1	SUPERSTRUCTURE DETAILS 1			
68	CBRR0697-BRG-SUP-003-2	SUPERSTRUCTURE DETAILS 2			
69	CBRR0697-BRG-SUP-003-3	SUPERSTRUCTURE DETAILS 3			
70	CBRR0697-BRG-SUP-003-4	SUPERSTRUCTURE DETAILS 4			
71	CBRR0697-BRG-SUP-003-5	SUPERSTRUCTURE DETAILS 5			
72	CBRR0697-BRG-SUP-004-1	SUPERSTRUCTURE DETAILS 6			
73	CBRR0697-BRG-SUP-004-2	SUPERSTRUCTURE DETAILS 7			
74	CBRR0697-BRG-SUP-004-3	SUPERSTRUCTURE DETAILS 8			
75	CBRR0697-BRG-SUP-004-4	SUPERSTRUCTURE DETAILS 9			
76	CBRR0697-BRG-SUP-004-5	SUPERSTRUCTURE DETAILS 10			
77	CBRR0697-BRG-SUP-004-6	SUPERSTRUCTURE DETAILS 11			
78	CBRR0697-BRG-SUP-005-1	SUPERSTRUCTURE DETAILS 12			
79	CBRR0697-BRG-SUP-005-2	SUPERSTRUCTURE DETAILS 13			
80	CBRR0697-BRG-SUP-005-3	SUPERSTRUCTURE DETAILS 14			
81	CBRR0697-BRG-SUP-004-7	SUPERSTRUCTURE DETAILS 15			
82	CBRR0697-BRG-SUP-004-8	SUPERSTRUCTURE DETAILS 16			
83	CBRR0697-BRG-SUP-006-1	RAILING DETAILS 1			
84	CBRR0697-BRG-SUP-006-2	RAILING DETAILS 2			
85	CBRR0697-BRG-SUP-006-3	RAILING DETAILS 3			
86	CBRR0697-BRG-RAL-001-1	CONCRETE CURB			
87	CBRR0697-BRG-RAL-001-2	CONCRETE BARRIER (TYPE P-4, TL-4)			
88	CBRR0697-BRG-RAL-002	CONCRETE SNOW BARRIER			
89	CBRR0697-BRG-RAL-003	WIRE FENCE DESIGN SPECIAL			
90	CBRR0697-BRG-SYS-001-1	CONDUIT SYSTEM 1			
91	CBRR0697-BRG-SYS-001-2	CONDUIT SYSTEM 2			
92	CBRR0697-BRG-SYS-001-3	CONDUIT SYSTEM 3			
93	CBRR0697-BRG-SYS-001-3	CONDUIT SYSTEM 4			
94	CBRR0697-BRG-DRN-001-1	DRAINAGE SYSTEM DETAILS 1			
95	CBRR0697-BRG-DRN-001-2	DRAINAGE SYSTEM DETAILS 2			
96	CBRR0697-BRG-DRN-001-3	DRAINAGE SYSTEM DETAILS 3			
97	CBRR0697-BRG-EXP-001	WATERPROOF EXPANSION DEVICE 1			
98	CBRR0697-BRG-EXP-002-1	WATERPROOF EXPANSION DEVICE 2			
99	CBRR0697-BRG-EXP-002-2	WATERPROOF EXPANSION DEVICE 3			
100	CBRR0697-BRG-DTL-001-1	BRIDGE DETAILS 1			
101	CBRR0697-BRG-DTL-001-2	BRIDGE DETAILS 2			
102	CBRR0697-BRG-DTL-001-3	BRIDGE DETAILS 3			
103	CBRR0697-BRG-DTL-001-4	BRIDGE DETAILS 4			
104	CBRR0697-BRG-DTL-001-5	BRIDGE DETAILS 5			
105	CBRR0697-BRG-DTL-002	AS-BUILT BRIDGE DATA			
106	CBRR0697-BRG-SUR-001-1	BRIDGE SURVEY 1			
107	CBRR0697-BRG-SUR-001-2	BRIDGE SURVEY 2			
108	CBRR0697-BRG-BOR-001-1	BRIDGE SURVEY PLAN			
109	CBRR0697-BRG-BOR-002-1	BRIDGE SURVEY PROFILE 1			
110	CBRR0697-BRG-BOR-002-2	BRIDGE SURVEY PROFILE 2			

NO.	DATE	BY	CHECK	DESIGN	REVISION / SUBMITTAL

AECOM

90% SUBMISSION - 01/22/16

METROPOLITAN COUNCIL

SOUTHWEST Green Line LRT Extension

CIVIL - VOLUME 4G
GENERAL
VOLUME INDEX OF PLAN SHEETS
SHEET 1

DISCIPLINE: GENERAL

SHEET NAME: 00-GEN-IDX-001

SHEET 2 OF 503

Jan. 21 2016 05:36 pm V:\3400_ADC\CAD\CAD MANAGEMENT\DRAWING LIST\COVER SHEETS 90%\90% GEN-IDX_VOL_04.dwg By: v-kriewamr

CIVIL CONSTRUCTION

SHT #	SHEET NAME	SHEET DESCRIPTION	STATION	STATION	REV
		VOLUME 4G - BRIDGES (cont'd)			
111	CBRR0697-BRG-BOR-002-3	BRIDGE SURVEY PROFILE 3			
112	CBRR0697-BRG-BOR-002-4	BRIDGE SURVEY PROFILE 4			
113	CBRR0697-BRG-STG-001-1	STAGING PLAN 1			
114	CBRR0697-BRG-STG-001-2	STAGING PLAN 2			
115	CBRR0697-BRG-STG-001-3	STAGING PLAN 3			
116	CBRR0697-BRG-STG-001-4	STAGING PLAN 4			
117	CBRR0697-BRG-STG-001-5	STAGING PLAN 5			
118	CBRR0697-BRG-STG-001-6	STAGING PLAN DETAILS			
		GLENWOOD AVE WEST - BRIDGE 27C16			
1	CBR27C16-BRG-GPE	GENERAL PLAN AND ELEVATION			
2	CBR27C16-BRG-TRN-001	TRANSVERSE SECTION AND QUANTITIES			
3	CBR27C16-BRG-SUP-001	BRIDGE LAYOUT			
4	CBR27C16-BRG-ABT-001-1	WEST ABUTMENT DETAILS 1			
5	CBR27C16-BRG-ABT-001-2	WEST ABUTMENT DETAILS 2			
6	CBR27C16-BRG-ABT-001-3	WEST ABUTMENT DETAILS 3			
7	CBR27C16-BRG-ABT-001-4	WEST ABUTMENT DETAILS 4			
8	CBR27C16-BRG-ABT-001-5	WEST ABUTMENT REINFORCEMENT 1			
9	CBR27C16-BRG-ABT-001-6	WEST ABUTMENT REINFORCEMENT 2			
10	CBR27C16-BRG-ABT-001-7	WEST ABUTMENT REINFORCEMENT 3			
11	CBR27C16-BRG-ABT-001-8	WEST ABUTMENT REINFORCEMENT 4			
12	CBR27C16-BRG-ABT-001-9	WEST ABUTMENT REINFORCEMENT 5			
13	CBR27C16-BRG-ABT-001-10	WEST ABUTMENT REINFORCEMENT 6			
14	CBR27C16-BRG-ABT-001-11	WEST ABUTMENT REINFORCEMENT 7			
15	CBR27C16-BRG-ABT-001-12	WEST ABUTMENT REINFORCEMENT 8			
16	CBR27C16-BRG-PIR-001-1	WEST PIER DETAILS 1			
17	CBR27C16-BRG-PIR-001-2	WEST PIER DETAILS 2			
18	CBR27C16-BRG-PIR-001-3	WEST PIER DETAILS 3			
19	CBR27C16-BRG-PIR-001-4	WEST PIER REINFORCEMENT 1			
20	CBR27C16-BRG-PIR-001-5	WEST PIER REINFORCEMENT 2			
21	CBR27C16-BRG-PIR-001-6	WEST PIER REINFORCEMENT 3			
22	CBR27C16-BRG-SUP-002	FRAMING PLAN			
23	CBR27C16-BRG-SUP-003	STRUCTURAL STEEL DETAILS			
24	CBR27C16-BRG-SUP-004	SUPERSTRUCTURE DETAILS 1			
25	CBR27C16-BRG-SUP-005	SUPERSTRUCTURE DETAILS 2			
26	CBR27C16-BRG-SUP-006	SUPERSTRUCTURE DETAILS 3			
27	CBR27C16-BRG-SUP-007-1	SUPERSTRUCTURE DETAILS 4			
28	CBR27C16-BRG-SUP-007-2	SUPERSTRUCTURE DETAILS 5			
29	CBR27C16-BRG-SUP-007-3	SUPERSTRUCTURE DETAILS 6			
30	CBR27C16-BRG-SUP-007-4	SUPERSTRUCTURE DETAILS 7			
31	CBR27C16-BRG-SUP-007-5	SUPERSTRUCTURE DETAILS 8			
32	CBR27C16-BRG-SUP-009-10	SUPERSTRUCTURE DETAILS 9			
33	CBR27C16-BRG-SUP-010-11	SUPERSTRUCTURE DETAILS 10			
34	CBR27C16-BRG-RAL-001-1	RAILING DETAILS 1			
35	CBR27C16-BRG-RAL-001-2	RAILING DETAILS 2			
36	CBR27C16-BRG-RAL-001-3	RAILING DETAILS 3			
37	CBR27C16-BRG-RAL-001-4	RAILING DETAILS 4			
38	CBR27C16-BRG-RAL-002-1	STRUCTURAL TUBE RAILING (DESIGN T-1) AND CONCRETE PARAPET (TYPE P-2, TL-4)			
39	CBR27C16-BRG-RAL-002-2	CONCRETE CURB			
40	CBR27C16-BRG-RAL-002-3	CONCRETE BARRIER (TYPE P-4, TL-4)			
41	CBR27C16-BRG-RAL-002-4	WIRE FENCE (DESIGN W-1)			
42	CBR27C16-BRG-RAL-003	WIRE FENCE SPECIAL DESIGN			
43	CBR27C16-BRG-SYS-001	CONDUIT SYSTEM FOR ELECTRICAL			
44	CBR27C16-BRG-SYS-002	CONDUIT SYSTEM FOR LIGHTING			
45	CBR27C16-BRG-EXP-001	WATERPROOF EXPANSION DEVICE 1			
46	CBR27C16-BRG-EXP-002-1	WATERPROOF EXPANSION DEVICE 2			
47	CBR27C16-BRG-EXP-002-2	WATERPROOF EXPANSION DEVICE 3			
48	CBR27C16-BRG-DTL-001-1	APPROACH PANEL DETAILS 1			
49	CBR27C16-BRG-DTL-001-2	APPROACH PANEL DETAILS 2			
50	CBR27C16-BRG-DTL-001-3	APPROACH PANEL DETAILS 3			
51	CBR27C16-BRG-DTL-001-4	APPROACH PANEL DETAILS 4			
52	CBR27C16-BRG-DTL-001-5	APPROACH PANEL DETAILS 5			
53	CBR27C16-BRG-DTL-002-1	BRIDGE DETAILS 1			
54	CBR27C16-BRG-DTL-002-2	BRIDGE DETAILS 2			
55	CBR27C16-BRG-DTL-002-3	BRIDGE DETAILS 3			
56	CBR27C16-BRG-DTL-002-4	BRIDGE DETAILS 4			
57	CBR27C16-BRG-DTL-002-5	BRIDGE DETAILS 5			
58	CBR27C16-BRG-DTL-003	AS-BUILT BRIDGE DATA			
59	CBR27C16-BRG-SUR-001-1	BRIDGE SURVEY 1			
60	CBR27C16-BRG-SUR-001-2	BRIDGE SURVEY 2			
61	CBR27C16-BRG-SUR-001-3	BRIDGE SURVEY 3			

CIVIL CONSTRUCTION

SHT #	SHEET NAME	SHEET DESCRIPTION	STATION	STATION	REV
62	CBR27C16-BRG-BOR-001	BRIDGE SURVEY PLAN			
63	CBR27C16-BRG-BOR-002-1	BRIDGE SURVEY PROFILE 1			
64	CBR27C16-BRG-BOR-002-2	BRIDGE SURVEY PROFILE 2			
65	CBR27C16-BRG-STG-001 -1	STAGING PLAN 1			
66	CBR27C16-BRG-STG-001-2	STAGING PLAN 2			
67	CBR27C16-BRG-STG-001-3	STAGING PLAN 3			
68	CBR27C16-BRG-STG-001-4	STAGING PLAN 4			
		GLENWOOD AVE EAST - BRIDGE 27C17			
1	CBR27C17-BRG-GPE	GENERAL PLAN AND ELEVATION			
2	CBR27C17-BRG-TRN-001	TRANSVERSE SECTION AND QUANTITIES			
3	CBR27C17-BRG-SUP-001	BRIDGE LAYOUT			
4	CBR27C17-BRG-ABT-001-1	EAST ABUTMENT DETAILS 1			
5	CBR27C17-BRG-ABT-001-2	EAST ABUTMENT DETAILS 2			
6	CBR27C17-BRG-ABT-001-3	EAST ABUTMENT DETAILS 3			
7	CBR27C17-BRG-ABT-001-4	EAST ABUTMENT DETAILS 4			
8	CBR27C17-BRG-ABT-001-5	EAST ABUTMENT DETAILS 5			
9	CBR27C17-BRG-ABT-001-6	EAST ABUTMENT DETAILS 6			
10	CBR27C17-BRG-ABT-001-7	EAST ABUTMENT DETAILS 7			
11	CBR27C17-BRG-ABT-001-8	EAST ABUTMENT REINFORCEMENT 1			
12	CBR27C17-BRG-ABT-001-9	EAST ABUTMENT REINFORCEMENT 2			
13	CBR27C17-BRG-ABT-001-10	EAST ABUTMENT REINFORCEMENT 3			
14	CBR27C17-BRG-ABT-001-11	EAST ABUTMENT REINFORCEMENT 4			
15	CBR27C17-BRG-ABT-001-12	EAST ABUTMENT REINFORCEMENT 5			
16	CBR27C17-BRG-ABT-001-13	EAST ABUTMENT REINFORCEMENT 6			
17	CBR27C17-BRG-ABT-001-14	EAST ABUTMENT REINFORCEMENT 7			
18	CBR27C17-BRG-ABT-001-15	EAST ABUTMENT REINFORCEMENT 8			
19	CBR27C17-BRG-ABT-001-16	EAST ABUTMENT REINFORCEMENT 9			
20	CBR27C17-BRG-PIR-001-1	EAST PIER DETAILS 1			
21	CBR27C17-BRG-PIR-001-2	EAST PIER DETAILS 2			
22	CBR27C17-BRG-PIR-001-3	EAST PIER DETAILS 3			
23	CBR27C17-BRG-PIR-001-4	EAST PIER REINFORCEMENT 1			
24	CBR27C17-BRG-PIR-001-5	EAST PIER REINFORCEMENT 2			
25	CBR27C17-BRG-PIR-001-6	EAST PIER REINFORCEMENT 3			
26	CBR27C17-BRG-SUP-002	FRAMING PLAN			
27	CBR27C17-BRG-PCB-001	MN45" PRESTRESSED CONCRETE BEAM DETAILS			
28	CBR27C17-BRG-SUP-003	SUPERSTRUCTURE DETAILS 1			
29	CBR27C17-BRG-SUP-004	SUPERSTRUCTURE DETAILS 2			
30	CBR27C17-BRG-SUP-005	SUPERSTRUCTURE DETAILS 3			
31	CBR27C17-BRG-SUP-006-1	SUPERSTRUCTURE DETAILS 4			
32	CBR27C17-BRG-SUP-006-2	SUPERSTRUCTURE DETAILS 5			
33	CBR27C17-BRG-SUP-006-3	SUPERSTRUCTURE DETAILS 6			
34	CBR27C17-BRG-SUP-006-4	SUPERSTRUCTURE DETAILS 7			
35	CBR27C17-BRG-SUP-006-5	SUPERSTRUCTURE DETAILS 8			
36	CBR27C17-BRG-SUP-007-1	SUPERSTRUCTURE DETAILS 9			
37	CBR27C17-BRG-SUP-007-2	SUPERSTRUCTURE DETAILS 10			
38	CBR27C17-BRG-RAL-001-1	RAILING DETAILS 1			
39	CBR27C17-BRG-RAL-001-2	RAILING DETAILS 2			
40	CBR27C17-BRG-RAL-001-3	RAILING DETAILS 3			
41	CBR27C17-BRG-RAL-001-4	RAILING DETAILS 4			
42	CBR27C17-BRG-RAL-002-1	STRUCTURAL TUBE RAILING (DESIGN T-1) AND CONCRETE PARAPET (TYPE P-2, TL-4)			
43	CBR27C17-BRG-RAL-002-2	CONCRETE CURB			
44	CBR27C17-BRG-RAL-002-3	CONCRETE BARRIER (TYPE P-4, TL-4)			
45	CBR27C17-BRG-RAL-002-4	WIRE FENCE (DESIGN W-1)			
46	CBR27C17-BRG-RAL-003	WIRE FENCE SPECIAL DESIGN			
47	CBR27C17-BRG-SYS-001	CONDUIT SYSTEM			
48	CBR27C17-BRG-EXP-001	WATERPROOF EXPANSION DEVICE 1			
49	CBR27C17-BRG-EXP-002-1	WATERPROOF EXPANSION DEVICE 2			
50	CBR27C17-BRG-EXP-002-2	WATERPROOF EXPANSION DEVICE 3			
51	CBR27C17-BRG-DTL-003-1	APPROACH PANEL DETAILS 1			
52	CBR27C17-BRG-DTL-003-2	APPROACH PANEL DETAILS 2			
53	CBR27C17-BRG-DTL-003-3	APPROACH PANEL DETAILS 3			
54	CBR27C17-BRG-DTL-003-4	APPROACH PANEL DETAILS 4			
55	CBR27C17-BRG-DTL-003-5	APPROACH PANEL DETAILS 5			
56	CBR27C17-BRG-DTL-001-1	BRIDGE DETAILS 1			
57	CBR27C17-BRG-DTL-001-2	BRIDGE DETAILS 2			
58	CBR27C17-BRG-DTL-001-3	BRIDGE DETAILS 3			
59	CBR27C17-BRG-DTL-001-4	BRIDGE DETAILS 4			
60	CBR27C17-BRG-DTL-001-5	BRIDGE DETAILS 5			
61	CBR27C17-BRG-DTL-002	AS-BUILT BRIDGE DATA			
62	CBR27C17-BRG-SUR-001-1	BRIDGE SURVEY 1			
63	CBR27C17-BRG-SUR-001-2	BRIDGE SURVEY 2			

CIVIL CONSTRUCTION

SHT #	SHEET NAME	SHEET DESCRIPTION	STATION	STATION	REV
64	CBR27C17-BRG-SUR-001-3	BRIDGE SURVEY 3			
65	CBR27C17-BRG-BOR-001-1	BRIDGE SURVEY PLAN			
66	CBR27C17-BRG-BOR-002-1	BRIDGE SURVEY PROFILE 1			
67	CBR27C17-BRG-BOR-002-2	BRIDGE SURVEY PROFILE 2			
68	CBR27C17-BRG-STG-001-1	STAGING PLAN 1			
69	CBR27C17-BRG-STG-001-2	STAGING PLAN 2			
70	CBR27C17-BRG-STG-001-3	STAGING PLAN 3			
71	CBR27C17-BRG-STG-001-4	STAGING PLAN 4			
		5TH AVE AND 7TH ST LRT - BRIDGE 27C18			
1	CBR27C18-BRG-GPE-001	KEY PLAN			
2	CBR27C18-BRG-GPE-002	GENERAL PLAN & ELEVATION 1			
3	CBR27C18-BRG-GPE-003	GENERAL PLAN & ELEVATION 2			
4	CBR27C18-BRG-GPE-004	GENERAL PLAN & ELEVATION 3			
5	CBR27C18-BRG-GPE-005	GENERAL PLAN & ELEVATION 4			
6	CBR27C18-BRG-TRN-001	SCHEDULE OF QUANTITIES			
7	CBR27C18-BRG-TRN-002	TRANSVERSE SECTION 1			
8	CBR27C18-BRG-TRN-003	TRANSVERSE SECTION 2			
9	CBR27C18-BRG-WPL-001	BRIDGE LAYOUT 1			
10	CBR27C18-BRG-WPL-002	BRIDGE LAYOUT 2			
11	CBR27C18-BRG-WPL-003	BRIDGE LAYOUT 3			
12	CBR27C18-BRG-WPL-004	BRIDGE LAYOUT 4			
13	CBR27C18-BRG-WPL-005	BRIDGE LAYOUT 5			
14	CBR27C18-BRG-ABT-001	SOUTH ABUTMENT DETAILS 1			
15	CBR27C18-BRG-ABT-002	SOUTH ABUTMENT DETAILS 2			
16	CBR27C18-BRG-ABT-003	SOUTH ABUTMENT DETAILS 3			
17	CBR27C18-BRG-ABT-004	SOUTH ABUTMENT DETAILS 4			
18	CBR27C18-BRG-ABT-005-1	SOUTH ABUTMENT REINFORCEMENT 1			
19	CBR27C18-BRG-ABT-005-2	SOUTH ABUTMENT REINFORCEMENT 2			
20	CBR27C18-BRG-ABT-005-3	SOUTH ABUTMENT REINFORCEMENT 3			
21	CBR27C18-BRG-ABT-005-4	SOUTH ABUTMENT REINFORCEMENT 4			
22	CBR27C18-BRG-ABT-005-5	SOUTH ABUTMENT REINFORCEMENT 5			
23	CBR27C18-BRG-ABT-005-6	SOUTH ABUTMENT REINFORCEMENT 6			
24	CBR27C18-BRG-PIR-001	PIER 1 DETAILS 1			
25	CBR27C18-BRG-PIR-002	PIER 1 DETAILS 2			
26	CBR27C18-BRG-PIR-003-1	PIER 1 REINFORCEMENT 1			
27	CBR27C18-BRG-PIR-003-2	PIER 1 REINFORCEMENT 2			
28	CBR27C18-BRG-PIR-003-3	PIER 1 REINFORCEMENT 3			
29	CBR27C18-BRG-PIR-003-4	PIER 1 REINFORCEMENT 4			
30	CBR27C18-BRG-PIR-004	PIER 2 DETAILS 1			
31	CBR27C18-BRG-PIR-005-1	PIER 2 DETAILS 2			
32	CBR27C18-BRG-PIR-005-2	PIER 2 REINFORCEMENT 1			
33	CBR27C18-BRG-PIR-005-3	PIER 2 REINFORCEMENT 2			
34	CBR27C18-BRG-PIR-006	PIER 3 DETAILS 1			
35	CBR27C18-BRG-PIR-007	PIER 3 DETAILS 2			
36	CBR27C18-BRG-PIR-008	PIER 4 DETAILS 1			
37	CBR27C18-BRG-PIR-009-1	PIER 4 DETAILS 2			
38	CBR27C18-BRG-PIR-009-2	PIER 3 & 4 REINFORCEMENT 1			
39	CBR27C18-BRG-PIR-009-3	PIER 3 & 4 REINFORCEMENT 2			
40	CBR27C18-BRG-PIR-010	PIER 5 DETAILS 1			
41	CBR27C18-BRG-PIR-011-1	PIER 5 DETAILS 2			
42	CBR27C18-BRG-PIR-011-2	PIER 5 REINFORCEMENT 1			
43	CBR27C18-BRG-PIR-011-3	PIER 5 REINFORCEMENT 2			
44	CBR27C18-BRG-PIR-012	PIER 6 DETAILS 1			
45	CBR27C18-BRG-PIR-013	PIER 6 DETAILS 2			
46	CBR27C18-BRG-PIR-014-1	PIER 6 REINFORCEMENT 1			
47	CBR27C18-BRG-PIR-014-2	PIER 6 REINFORCEMENT 2			
48	CBR27C18-BRG-PIR-014-3	PIER 6 REINFORCEMENT 3			
49	CBR27C18-BRG-PIR-014-4	PIER 6 REINFORCEMENT 4			
50	CBR27C18-BRG-PIR-015	PIER 7 DETAILS 1			
51	CBR27C18-BRG-PIR-016-1	PIER 7 DETAILS 2			
52	CBR27C18-BRG-PIR-016-2	PIER 7 REINFORCEMENT 1			
53	CBR27C18-BRG-PIR-016-3	PIER 7 REINFORCEMENT 2			
54	CBR27C18-BRG-PIR-017	PIER 8 DETAILS 1			
55	CBR27C18-BRG-PIR-018-1	PIER 8 DETAILS 2			
56	CBR27C18-BRG-PIR-018-2	PIER 8 REINFORCEMENT 1			
57	CBR27C18-BRG-PIR-018-3	PIER 8 REINFORCEMENT 2			
58	CBR27C18-BRG-PIR-019	PIER 9 DETAILS 1			
59	CBR27C18-BRG-PIR-020-1	PIER 9 DETAILS 2			
60	CBR27C18-BRG-PIR-020-2	PIER 9 REINFORCEMENT 1			
61	CBR27C18-BRG-PIR-020-3	PIER 9 REINFORCEMENT 2			
62	CBR27C18-BRG-PIR-021	PIER 10 DETAILS 1			
63	CBR27C18-BRG-PIR-022-1	PIER 10 DETAILS 2			

NO.	DATE	BY	CHECK	DESIGN	REVISION / SUBMITTAL

AECOM

90% SUBMISSION - 01/22/16

METROPOLITAN COUNCIL

SOUTHWEST Green Line LRT Extension

CIVIL - VOLUME 4G
GENERAL
VOLUME INDEX OF PLAN SHEETS
SHEET 2

DISCIPLINE: GENERAL

SHEET NAME: 00-GEN-IDX-002

SHEET 3 OF 503

Jan, 21 2016 05:36 pm V:\3400_ADC\CAD\CAD MANAGEMENT\DRAWING LIST\COVER SHEETS 90%\90% GEN-IDX_VOL_04.dwg By: v-kriewamr

CIVIL CONSTRUCTION

SHT #	SHEET NAME	SHEET DESCRIPTION	STATION	STATION	REV
		VOLUME 4G - BRIDGES (cont'd)			
64	CBR27C18-BRG-PIR-022-2	PIER 10 REINFORCEMENT 1			
65	CBR27C18-BRG-PIR-022-3	PIER 10 REINFORCEMENT 2			
66	CBR27C18-BRG-PEL-023	EXISTING PIER 9 DETAILS 1			
67	CBR27C18-BRG-PEL-024	EXISTING PIER 9 DETAILS 2			
68	CBR27C18-BRG-FRP-001	FRAMING PLAN 1			
69	CBR27C18-BRG-FRP-002	FRAMING PLAN 2			
70	CBR27C18-BRG-FRP-003	FRAMING PLAN 3			
71	CBR27C18-BRG-FRP-004	FRAMING PLAN 4			
72	CBR27C18-BRG-FRP-005	FRAMING PLAN 5			
73	CBR27C18-BRG-FRP-006	FRAMING PLAN 6			
74	CBR27C18-BRG-PCB-001	MN45" PRESTRESSED CONCRETE BEAM (PRETENSIONED) MN45-84			
75	CBR27C18-BRG-PCB-002	MN45" PRESTRESSED CONCRETE BEAM (PRETENSIONED) MN45-82			
76	CBR27C18-BRG-PCB-003	MN45" PRESTRESSED CONCRETE BEAM (PRETENSIONED) MN45-89			
77	CBR27C18-BRG-PCB-004	MN45" PRESTRESSED CONCRETE BEAM (PRETENSIONED) MN45-92			
78	CBR27C18-BRG-PCB-005	MN45" PRESTRESSED CONCRETE BEAM (PRETENSIONED) MN45-62			
79	CBR27C18-BRG-SUP-001	SUPERSTRUCTURE DETAILS 1			
80	CBR27C18-BRG-SUP-002	SUPERSTRUCTURE DETAILS 2			
81	CBR27C18-BRG-SUP-003	SUPERSTRUCTURE DETAILS 3			
82	CBR27C18-BRG-SUP-004	SUPERSTRUCTURE DETAILS 4			
83	CBR27C18-BRG-SUP-005	SUPERSTRUCTURE DETAILS 5			
84	CBR27C18-BRG-SUP-006	SUPERSTRUCTURE DETAILS 6			
85	CBR27C18-BRG-SUP-007	SUPERSTRUCTURE DETAILS 7			
86	CBR27C18-BRG-SUP-008	SUPERSTRUCTURE REINFORCEMENT 1			
87	CBR27C18-BRG-SUP-009	SUPERSTRUCTURE REINFORCEMENT 2			
88	-	NOT USED			
89	-	NOT USED			
90	-	NOT USED			
91	-	NOT USED			
92	CBR27C18-BRG-SUP-015	SUPERSTRUCTURE REINFORCEMENT 7			
93	CBR27C18-BRG-SUP-016	SUPERSTRUCTURE REINFORCEMENT 8			
94	-	NOT USED			
95	CBR27C18-BRG-SUP-018	SUPERSTRUCTURE REINFORCEMENT 10			
96	CBR27C18-BRG-SUP-019	SUPERSTRUCTURE REINFORCEMENT 11			
97	CBR27C18-BRG-SUP-020	SUPERSTRUCTURE REINFORCEMENT 12			
98	CBR27C18-BRG-SUP-021	SUPERSTRUCTURE REINFORCEMENT 13			
99	CBR27C18-BRG-SUP-022	SUPERSTRUCTURE REINFORCEMENT 14			
100	CBR27C18-BRG-SUP-023	SUPERSTRUCTURE REINFORCEMENT 15			
101	CBR27C18-BRG-SUP-024	SUPERSTRUCTURE REINFORCEMENT 16			
102	CBR27C18-BRG-SUP-025	SUPERSTRUCTURE REINFORCEMENT 17			
103	CBR27C18-BRG-SUP-026-3	SUPERSTRUCTURE REINFORCEMENT 18			
104	CBR27C18-BRG-SUP-026-4	SUPERSTRUCTURE REINFORCEMENT 19			
105	CBR27C18-BRG-SUP-027	SUPERSTRUCTURE REINFORCEMENT 20			
106	CBR27C18-BRG-SUP-026-1	SUPERSTRUCTURE REINFORCEMENT 21			
107	CBR27C18-BRG-SUP-029	FENCE LAYOUT 1			
108	CBR27C18-BRG-SUP-030	FENCE LAYOUT 2			
109	CBR27C18-BRG-SUP-031	FENCE LAYOUT 3			
110	CBR27C18-BRG-SUP-032	FENCE LAYOUT 4			
111	CBR27C18-BRG-SUP-033	FENCE LAYOUT 5			
112	CBR27C18-BRG-SUP-034	FENCE LAYOUT 6			
113	CBR27C18-BRG-RAL-001	WIRE FENCE (DESIGN W-1)			
114	CBR27C18-BRG-RAL-002	WIRE FENCE SPECIAL DESIGN 1			
115	CBR27C18-BRG-RAL-003	WIRE FENCE SPECIAL DESIGN 2			
116	CBR27C18-BRG-RAL-004	CONCRETE CURB			
117	-	NOT USED			
118	-	NOT USED			
119	CBR27C18-BRG-DRN-001	DRAINAGE SYSTEM DETAILS 1			
120	CBR27C18-BRG-DRN-002	DRAINAGE SYSTEM DETAILS 2			
121	CBR27C18-BRG-DRN-003	DRAINAGE SYSTEM DETAILS 3			
122	CBR27C18-BRG-DTL-003	WATERPROOF EXPANSION DEVICE 1			
123	CBR27C18-BRG-DTL-004	WATERPROOF EXPANSION DEVICE 2			
124	CBR27C18-BRG-DTL-005	WATERPROOF EXPANSION DEVICE 3			
125	CBR27C18-BRG-DTL-006	WATERPROOF EXPANSION DEVICE 4			
126	CBR27C18-BRG-SDT-001	BRIDGE DETAILS 1			
127	CBR27C18-BRG-SDT-002	BRIDGE DETAILS 2			
128	CBR27C18-BRG-SDT-003	BRIDGE DETAILS 3			
129	CBR27C18-BRG-SDT-007	BRIDGE DETAILS 4			
130	CBR27C18-BRG-SDT-008	BRIDGE DETAILS 5			

CIVIL CONSTRUCTION

SHT #	SHEET NAME	SHEET DESCRIPTION	STATION	STATION	REV
131	CBR27C18-BRG-SDT-009	BRIDGE DETAILS 6			
132	CBR27C18-BRG-SDT-010	AS-BUILT BRIDGE DATA			
133	CBR27C18-BRG-SUR-001	BRIDGE SURVEY 1			
134	CBR27C18-BRG-SUR-002	BRIDGE SURVEY 2			
135	CBR27C18-BRG-BOR-001	BRIDGE SURVEY PLAN 1			
136	CBR27C18-BRG-BOR-002	BRIDGE SURVEY PLAN 2			
137	CBR27C18-BRG-BOR-003	BRIDGE SURVEY PLAN 3			
138	CBR27C18-BRG-BOR-004	BRIDGE SURVEY PROFILE 1			
139	CBR27C18-BRG-BOR-004	BRIDGE SURVEY PROFILE 2			
140	CBR27C18-BRG-BOR-004	BRIDGE SURVEY PROFILE 3			
141	CBR27C18-BRG-BOR-004	BRIDGE SURVEY PROFILE 4			
142	CBR27C18-BRG-BOR-004	BRIDGE SURVEY PROFILE 5			
143	CBR27C18-BRG-BOR-004	BRIDGE SURVEY PROFILE 6			
144	CBR27C18-BRG-BOR-010	BRIDGE SURVEY PROFILE 7			
145	CBR27C18-BRG-STG-001	STAGING PLAN 1			
146	CBR27C18-BRG-STG-002	STAGING PLAN 2			
147	CBR27C18-BRG-STG-003	STAGING PLAN 3			
148	CBR27C18-BRG-STG-004	STAGING PLAN 4			

CIVIL CONSTRUCTION

SHT #	SHEET NAME	SHEET DESCRIPTION	STATION	STATION	REV

NO.	DATE	BY	CHECK	DESIGN	REVISION / SUBMITTAL

AECOM

90% SUBMISSION - 01/22/16

METROPOLITAN COUNCIL

SOUTHWEST Green Line LRT Extension

CIVIL - VOLUME 4G GENERAL VOLUME INDEX OF PLAN SHEETS SHEET 3

DISCIPLINE: GENERAL

SHEET NAME: 00-GEN-IDX-003

SHEET 4 OF 503

Jan, 21 2016 05:36 pm V:\3400_ADC\CAD\CAD MANAGEMENT\DRAWING LIST\COVER SHEETS 90%\90% GEN-IDX_VOL_04.dwg By: v-kriewamr

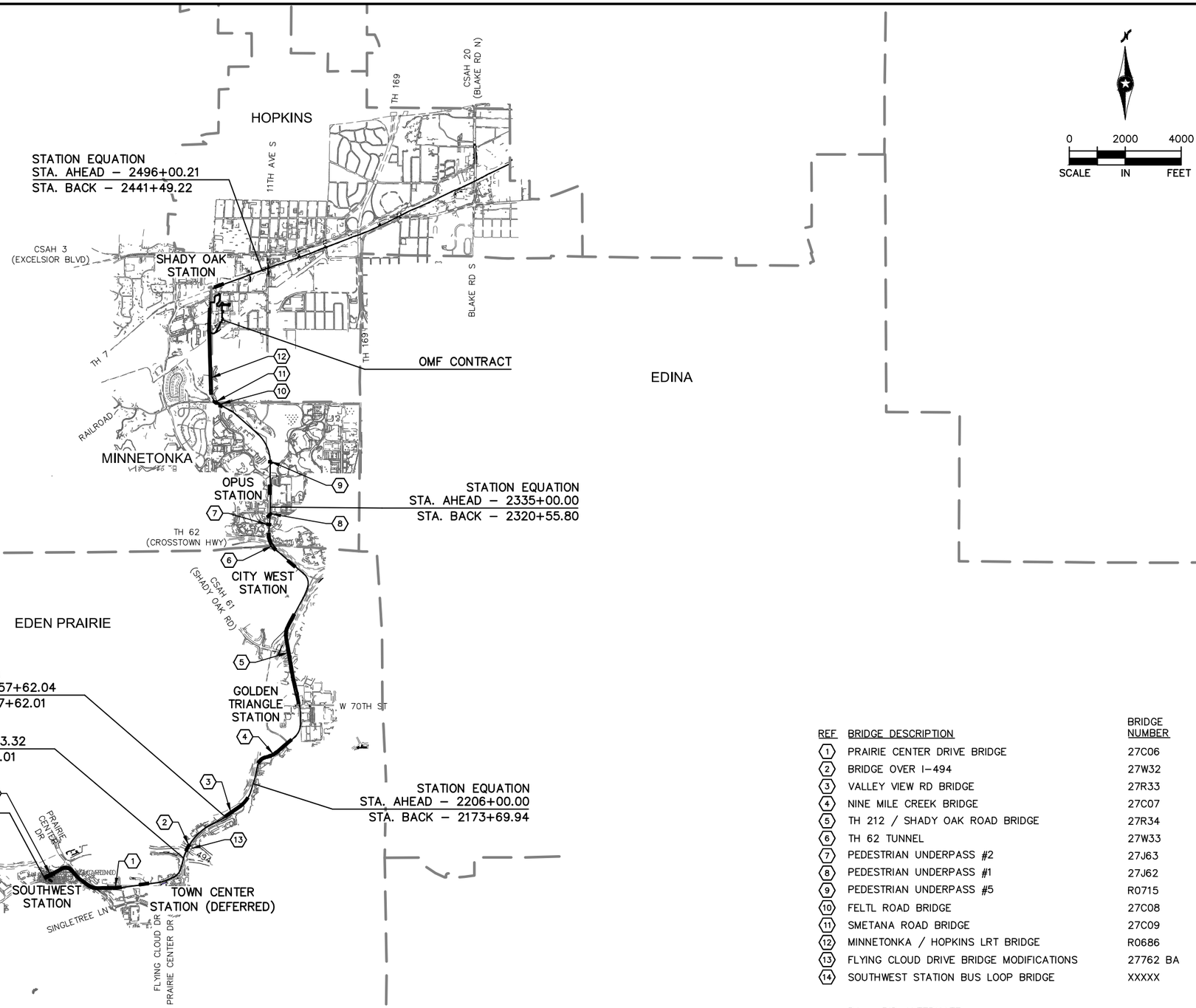

REF	BRIDGE DESCRIPTION	BRIDGE NUMBER
1	PRAIRIE CENTER DRIVE BRIDGE	27C06
2	BRIDGE OVER I–494	27W32
3	VALLEY VIEW RD BRIDGE	27R33
4	NINE MILE CREEK BRIDGE	27C07
5	TH 212 / SHADY OAK ROAD BRIDGE	27R34
6	TH 62 TUNNEL	27W33
7	PEDESTRIAN UNDERPASS #2	27J63
8	PEDESTRIAN UNDERPASS #1	27J62
9	PEDESTRIAN UNDERPASS #5	R0715
10	FELTL ROAD BRIDGE	27C08
11	SMETANA ROAD BRIDGE	27C09
12	MINNETONKA / HOPKINS LRT BRIDGE	R0686
13	FLYING CLOUD DRIVE BRIDGE MODIFICATIONS	27762 BA
14	SOUTHWEST STATION BUS LOOP BRIDGE	XXXXX

BA – BID ALTERNATE

NO.	DATE	BY	CHECK	DESIGN	REVISION / SUBMITTAL

AECOM

90% SUBMISSION - 01/22/16

METROPOLITAN COUNCIL

SOUTHWEST Green Line LRT Extension

CIVIL - VOLUME 4G
GENERAL
KEY MAP
SHEET 1

DISCIPLINE: GENERAL

SHEET NAME: W0-GEN-KEY-001

SHEET 5 OF 503

Jan, 16 2016 04:02 pm V:\3400_ADC\CAD\CAD MANAGEMENT\DRAWING LIST\COVER SHEETS 90%\W0-GEN-KEY.dwg By: V-KriewaMR

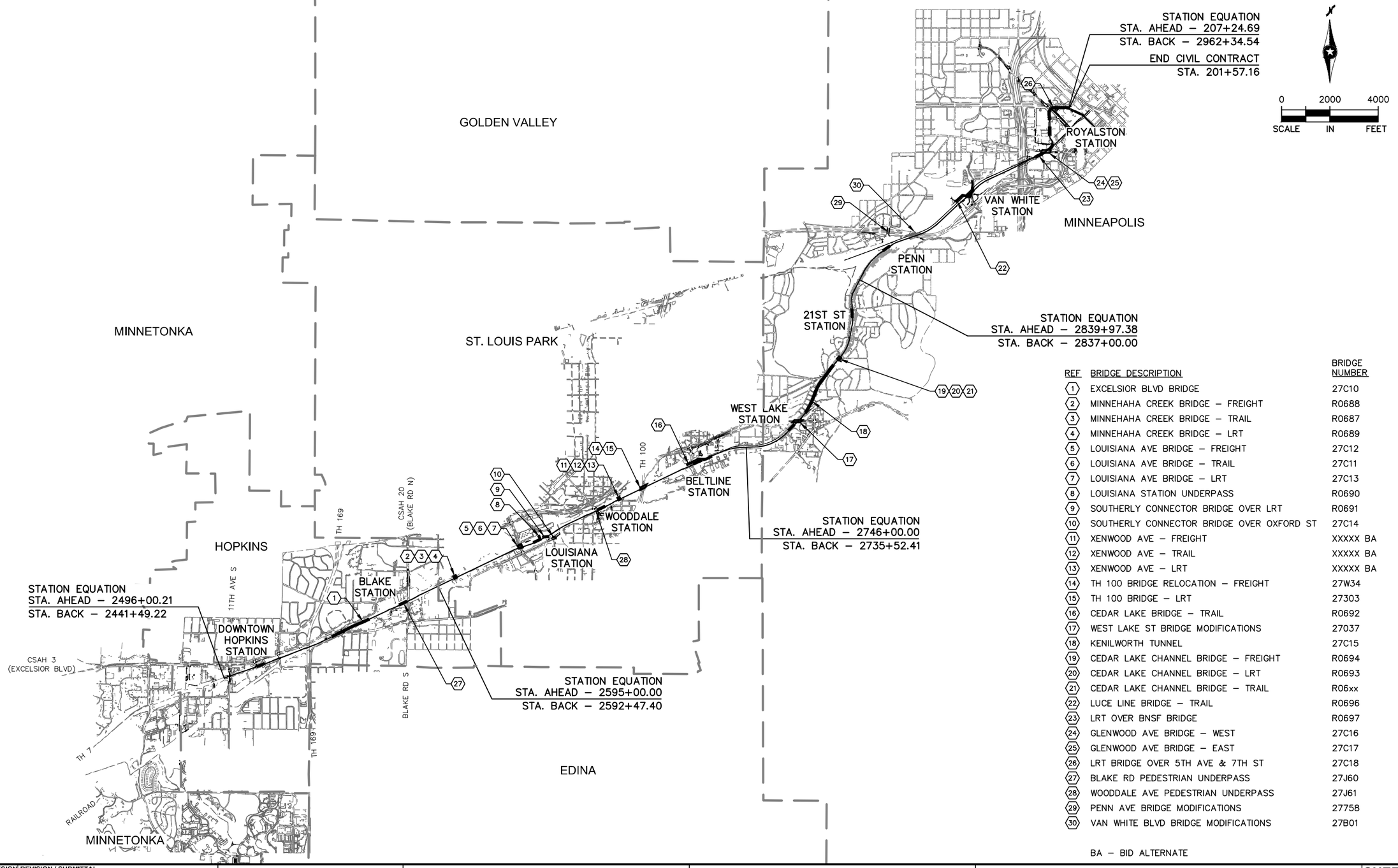

REF	BRIDGE DESCRIPTION	BRIDGE NUMBER
1	EXCELSIOR BLVD BRIDGE	27C10
2	MINNEHAHA CREEK BRIDGE – FREIGHT	R0688
3	MINNEHAHA CREEK BRIDGE – TRAIL	R0687
4	MINNEHAHA CREEK BRIDGE – LRT	R0689
5	LOUISIANA AVE BRIDGE – FREIGHT	27C12
6	LOUISIANA AVE BRIDGE – TRAIL	27C11
7	LOUISIANA AVE BRIDGE – LRT	27C13
8	LOUISIANA STATION UNDERPASS	R0690
9	SOUTHERLY CONNECTOR BRIDGE OVER LRT	R0691
10	SOUTHERLY CONNECTOR BRIDGE OVER OXFORD ST	27C14
11	XENWOOD AVE – FREIGHT	XXXXX BA
12	XENWOOD AVE – TRAIL	XXXXX BA
13	XENWOOD AVE – LRT	XXXXX BA
14	TH 100 BRIDGE RELOCATION – FREIGHT	27W34
15	TH 100 BRIDGE – LRT	27303
16	CEDAR LAKE BRIDGE – TRAIL	R0692
17	WEST LAKE ST BRIDGE MODIFICATIONS	27037
18	KENILWORTH TUNNEL	27C15
19	CEDAR LAKE CHANNEL BRIDGE – FREIGHT	R0694
20	CEDAR LAKE CHANNEL BRIDGE – LRT	R0693
21	CEDAR LAKE CHANNEL BRIDGE – TRAIL	R06xx
22	LUCE LINE BRIDGE – TRAIL	R0696
23	LRT OVER BNSF BRIDGE	R0697
24	GLENWOOD AVE BRIDGE – WEST	27C16
25	GLENWOOD AVE BRIDGE – EAST	27C17
26	LRT BRIDGE OVER 5TH AVE & 7TH ST	27C18
27	BLAKE RD PEDESTRIAN UNDERPASS	27J60
28	WOODDALE AVE PEDESTRIAN UNDERPASS	27J61
29	PENN AVE BRIDGE MODIFICATIONS	27758
30	VAN WHITE BLVD BRIDGE MODIFICATIONS	27B01

BA – BID ALTERNATE

NO.	DATE	BY	CHECK	DESIGN	REVISION / SUBMITTAL

AECOM

90% SUBMISSION - 01/22/16

METROPOLITAN COUNCIL

SOUTHWEST Green Line LRT Extension

CIVIL - VOLUME 4G
GENERAL
KEY MAP
SHEET 2

DISCIPLINE: GENERAL

SHEET NAME: E0-GEN-KEY-002

SHEET 6 OF 503

Jan, 16 2016 04:03 pm V:\3400_ADC\CAD\CAD MANAGEMENT\DRAWING LIST\COVER SHEETS 90%\E0-GEN-KEY.dwg By: V-KriewaMR

SYMBOLS

- PROPOSED DIRECTIONAL LANE USE
- EXISTING DIRECTIONAL LANE USE
- FLASHER (FREIGHT & PEDESTRIAN)
- CROSSING GATE (FREIGHT & LRT)
- CANTILEVER SIGNAL
- RAIL TURNOUT
- RAIL CROSSOVER (DOUBLE)
- RAIL CROSSOVER (SINGLE)
- POINT OF SWITCH (PS)
- OCS POLE FOUNDATION
- RAIL LUBRICATOR
- POINT OF INTERSECTION (PI)
- W2–200 — RAILROAD CURVE NUMBER
- ACCESSIBLE PEDESTRIAN CURB RAMP (DESIGN VARIES)
- HANDICAP PARKING STALL
- TACTILE WARNING STRIP
- TPSS BUILDING (TPSS–SW###) – NIC
  TUNNEL SYSTEMS HOUSE (TSY–SW###) – NIC
- SIGNAL / COMMUNICATION HOUSE – NIC
- STORM SEWER MANHOLE
- STORM SEWER CATCH BASIN
- STORM SEWER FLARED END SECTION
- STORM SEWER CLEAN–OUT
- STORM SEWER PUMP STATION
- DTXX / INV XXX.XX — DRAINTILE ID
- XXXX – ST — STORM SEWER STRUCTURE ID
- C / E — BUS SHELTER
- ROADWAY / PEDESTRIAN LIGHT

LINETYPES

- ROADWAY ℄
- TRACK ℄ (LRT)
- TRACK ℄ (FRT)
- RETAINING WALL
- BALLAST CURB
- TUNNEL WALL
- FENCE
- EX ROW
- PROP ROW
- PROP TCE
- PROP PE
- FENCE / RAILING
- ID — ID — FREIGHT INTRUSION DETECTION
- CONCRETE CURB AND GUTTER
- TRAIL (WIDTH VARIES)
- SIDEWALK
- DRIVEWAY
- BRIDGE
- SAWCUT
- DELINEATED WETLAND
- BMP (NWL) WATER EDGE
- PROPOSED FLOODPLAIN MITIGATION AREA
- SILT FENCE
- BALE BARRIER
- STORM SEWER
- CASING PIPE
- PIPE REMOVAL
- STRUCTURE REMOVAL
- FLOATING SILT FENCE
- SUPER DUTY SILT FENCE
- CONSTRUCTION LIMITS
- ROCK WEEPER
- DIVERSION DITCH
- OVERLAND FLOW
- CROSSWALK
- STOP BAR
- MEDIAN NOSE
- EP-EP-18 — WETLAND ID

CONSTRUCTION PACKAGE NOTE

NOTE: THE SWLRT CONSTRUCTION IS BEING IMPLEMENTED THROUGH THREE MAIN CONSTRUCTION PACKAGES; CIVIL, SYSTEMS & TUNNEL FACILITIES (SYS), AND OPERATIONS & MAINTENANCE FACILITY (OMF). CERTAIN SYS AND OMF SYMBOLS ARE SHOWN ON THE CIVIL CONTRACT PLANS FOR INFORMATION ONLY AND CERTAIN FACILITIES ARE NOT PART OF THE CIVIL CONTRACT.

Jan, 18 2016 07:44 am V:\3400_ADC\CAD\CAD MANAGEMENT\DRAWING LIST\COVER SHEETS 90%\CIV-GEN-NTS.dwg By: V-KriewaMR

NO.	DATE	BY	CHECK	DESIGN	REVISION / SUBMITTAL

AECOM

90% SUBMISSION - 01/22/16

METROPOLITAN COUNCIL

SOUTHWEST Green Line LRT Extension

CIVIL - VOLUME 4G
GENERAL
NOTES, ABBREVIATIONS, AND SYMBOLS
SHEET 1

DISCIPLINE: GENERAL

SHEET NAME: 00-GEN-NTS-001

SHEET 7 OF 503

ABBREVIATIONS

3-2 (EG)	SIGNAL HEAD NUMBER (PHASE 3, NO. 2)
AD	ALGEBRAIC DIFFERENCE
AVE	AVENUE
AWF	ADVANCE WARNING FLASHER
BA	BID ALTERNATE
BGN	BEGIN
BP	BEGINNING POINT
BVCE	BEGINNING VERTICAL CURVE ELEVATION
BVCS	BEGINNING VERTICAL CURVE STATION
BLVD	BOULEVARD
BMP	BEST MANAGEMENT PRACTICE
BNSF	BURLINGTON NORTHERN SANTA FE RAILWAY
C&G	CURB AND GUTTER
℄	CENTERLINE
CB	CATCH BASIN
CE	CLEARANCE ENVELOPE
CIR	CIRCLE
CO	DRAINTILE CLEANOUT STRUCTURE
CP	CANADIAN PACIFIC
CPRAIL	CANADIAN PACIFIC RAILWAY
CS	CURVE TO SPIRAL
CSAH	COUNTY STATE AID HIGHWAY
D&U	DRAINAGE AND UTILITY
DF	DIRECT FIXATION
DR	DRIVE
DT	DRAINTILE
DTL	DETAIL
DWY	DRIVEWAY
E	EAST
Ea	ACTUAL SUPERELEVATION (INCHES)
EB	EAST BOUND
EL or ELEV	ELEVATION
EP	ENDING POINT
ESMT	EASEMENT
Eu	UNBALANCED SUPERELEVATION (INCHES)
EVCE	ENDING VERTICAL CURVE ELEVATION
EVCS	ENDING VERTICAL CURVE STATION
EVP	EMERGENCY VEHICLE PRE-EMPTION
EX	EXISTING
FES	FLARED END SECTION
FYA	FLASHING YELLOW ARROW
GR RD	GROUND ROD
GRN	GREEN INDICATION
HCRRA	HENNEPIN COUNTY REGIONAL RAILROAD AUTHORITY
INL	BRIDGE DRAIN INLET
INS GR	INSULATED GROUND
IP	INPLACE
LED	LIGHT EMITTING DIODE
LH	LEFT HAND
LN	LANE
LRCI	LOCALLY REQUESTED CAPITAL INVESTMENT
LRT	LIGHT RAIL TRANSIT
LRV	LIGHT RAIL VEHICLE
LT	LEFT
LUM	LUMINAIRE
L_c	CURVE LENGTH (FEET)
L_s	SPIRAL LENGTH (FEET)
MIN	MINIMUM
MPH	MILES PER HOUR
MPLS	CITY OF MINNEAPOLIS
MPRB	MINNEAPOLIS PARK AND RECREATION BOARD
N	NORTH
NB	NORTH BOUND
NIC	NOT IN CONTRACT
NO	NUMBER
NWL	NORMAL WATER LINE
OCS	OUTLET CONTROL SYSTEM
OCS	OVERHEAD CONTACT SYSTEM
OMF	OPERATIONS AND MAINTENANCE FACILITY
OH	OVERHEAD
P1-1 (EG)	PEDESTRIAN HEAD (PHASE 1, NO. 1)
PB2-1 (EG)	PUSHBUTTON (PHASE 2, NO. 1)
PC	POINT OF CURVE
PE	PERMANENT EASEMENT
PED	PEDESTRIAN
PITO	POINT OF INTERSECTION OF TURNOUT
PKWY	PARKWAY
POB	POINT OF BEGINNING
POE	POINT OF ENDING
POT	POINT ON TANGENT
PROP	PROPOSED
PS	POINT OF SWITCH
PT	POINT OF TANGENT
PVI	POINT OF VERTICAL INTERSECTION
R	RADIUS (FEET)
RCP	REINFORCED CONCRETE PIPE
RD	ROAD
RL	RAIL LUBRICATOR
r	RATE OF CHANGE VERTICAL CURVE
RH	RIGHT HAND
ROW	RIGHT OF WAY
RT	RIGHT
S	SOUTH
SB	SOUTH BOUND
SC	SPIRAL TO CURVE
SIG-COMM	SIGNAL COMMUNICATION
SOP	SOURCE OF POWER
ST	STREET
ST	SPIRAL TO TANGENT
ST	STORM MANHOLE STRUCTURE
STA	STATION
TCE	TEMPORARY CONSTRUCTION EASEMENT
TH	TRUNK HIGHWAY
THRU	THROUGH
TOR	TOP OF RAIL
TPSS	TRACTION POWER SUBSTATION
TRK	TRACK
TS	TANGENT TO SPIRAL
TYP	TYPICAL
UG	UNDERGROUND
V	DESIGN VELOCITY (MPH)
VC	VERTICAL CURVE
VDE	VEHICLE DYNAMIC ENVELOPE
W	WEST
WB	WEST BOUND
WLK	WALK INDICATION

TRAIL INDEX

ABBREVIATED NAME	FULL NAME / LOCATION
TRAIL 1	UNDER RED CIRCLE DR, LRT, AND YELLOW CIRCLE DR
TRAIL 2	FROM TRAIL 1 TO GREEN CIRCLE DR
TRAIL 3	OPUS STATION ACCESS FROM BREN RD E
TRAIL 4	FROM BREN RD W TO TRAIL 5
TRAIL 5	FROM OPUS STATION TO GREEN CIRCLE DR
TRAIL 6	FROM TRAIL 5 TO SMETANA RD
CEDAR LAKE TRAIL	CEDAR LAKE LRT REGIONAL TRAIL/FROM SHADY OAK STATION TO 11TH AVE
CEDAR LAKE TRAIL	CEDAR LAKE LRT REGIONAL TRAIL/WEST OF EXCELSIOR
CEDAR LAKE TRAIL	CEDAR LAKE LRT REGIONAL LRT TRAIL/BETWEEN EXCELSIOR AND KENILWORTH TRAIL CONNECTION
MIDTOWN GREENWAY	MIDTOWN GREENWAY/EAST OF KENILWORTH TRAIL CONNECTION
TRAIL A	KENILWORTH TRAIL (SECONDARY)/BETWEEN CEDAR-ISLES CHANNEL AND 21ST STREET STATION
TRAIL B	KENILWORTH TRAIL (SECONDARY)/BETWEEN 21ST STREET STATION AND PENN STATION
TRAIL B	CEDAR LAKE TRAIL (SECONDARY)/EAST OF PENN STATION
TRAIL C	10' CONNECTOR TRAIL FROM CEDAR LAKE LRT REGIONAL TRAIL TO TYLER AVE.
TRAIL D	10' CONNECTOR TRAIL/BELTLINE STATION TO CEDAR LAKE LRT REGIONAL TRAIL
KENILWORTH TRAIL	KENILWORTH TRAIL (MAIN)/W LAKE ST TO PENN STATION
CEDAR LAKE TRAIL	CEDAR LAKE TRAIL (MAIN)/PENN STATION TO TH 394
TRAIL E	KENILWORTH TRAIL (SECONDARY)/EAST OF W LAKE ST
TRAIL F	KENILWORTH TRAIL (SECONDARY)/WEST OF CEDAR LAKE PKWY
TRAIL G	NOT USED
TRAIL H	10' CONNECTOR TRAIL/EAST OF PENN STATION TO KENWOOD PKWY
TRAIL I	10' CONNECTOR TRAIL FROM CEDAR LAKE REGIONAL TRAIL TO CSAH 20 (BLAKE RD)
CEDAR LAKE TRAIL	CEDAR LAKE TRAIL (MAIN)/AT-GRADE CROSSING AT PENN STATION
TRAIL J	CEDAR LAKE TRAIL (SECONDARY)/NORTHWEST OF PENN STATION
TRAIL K	CEDAR LAKE TRAIL (SECONDARY)/NORTHWEST OF PENN STATION
TRAIL L	CEDAR LAKE TRAIL (SECONDARY)/EAST OF PENN STATION
TRAIL M	10' CONNECTOR TRAIL FROM CEDAR LAKE REGIONAL TRAIL TO CSAH 20 (BLAKE RD)
TRAIL N	8' CONNECTOR TRAIL FROM CEDAR LAKE TRAIL TO EDGEBROOOK DRIVE
TRAIL O	8' CONNECTOR TRAIL FROM CEDAR LAKE TRAIL TO W LAKE STREET
TRAIL P	8' CONNECTOR TRAIL FROM CEDAR LAKE TRAIL TO LOUISIANA AVE
TRAIL Q	10' CONNECTOR TRAIL FROM CEDAR LAKE TRAIL TO TH 7 SERVICE ROAD
TRAIL R	20' CONNECTOR TRAIL FROM VAN WHITE STATION TO CEDAR LAKE TRAIL
TRAIL S	10' CONNECTOR TRAIL FROM CEDAR LAKE REGIONAL TRAIL TO BELTLINE BLVD
TRAIL T	8' CONNECTOR TRAIL FROM VAN WHITE STATION TO VAN WHITE MEMORIAL BLVD
TRAIL U	10' TRAIL PARALLEL TO CEDAR LAKE PKWY
LUCE LINE TRAIL	LUCE LINE REGIONAL TRAIL/ON BRIDGE OVER LIGHT RAIL
TRAIL V	CONNECTOR TRAIL TO LUCE LINE REGIONAL TRAIL WEST OF LIGHT RAIL
TRAIL W	CONNECTOR TRAIL TO LUCE LINE REGIONAL TRAIL WEST OF LIGHT RAIL
TRAIL X	NOT USED
TRAIL Y	12' CONNECTOR TRAIL FROM CEDAR LAKE REGIONAL TRAIL TO WOODDALE AVE S
TRAIL Z	12' CONNECTOR TRAIL FROM CEDAR LAKE REGIONAL TRAIL TO WOODDALE AVE S
TRAIL AA	8' PEDESTRIAN CONNECTOR TRAIL FROM TRAIL B TO PENN STATION
TRAIL BB	8' PEDESTRIAN CONNECTOR TRAIL FROM TRAIL B TO PENN STATION
TRAIL CC	10' CONNECTOR TRAIL FROM KENILWORTH TRAIL (MAIN) TO PENN STATION

NO.	DATE	BY	CHECK	DESIGN	REVISION / SUBMITTAL

AECOM

90% SUBMISSION - 01/22/16

METROPOLITAN COUNCIL

SOUTHWEST Green Line LRT Extension

CIVIL - VOLUME 4G
GENERAL
NOTES, ABBREVIATIONS, AND SYMBOLS
SHEET 2

DISCIPLINE: GENERAL

SHEET NAME: 00-GEN-NTS-002

SHEET 8 OF 503

Jan, 16 2016 04:04 pm V:\3400_ADC\CAD\CAD MANAGEMENT\DRAWING LIST\COVER SHEETS 90%\CIV-GEN-NTS.dwg By: V-KriewaMR

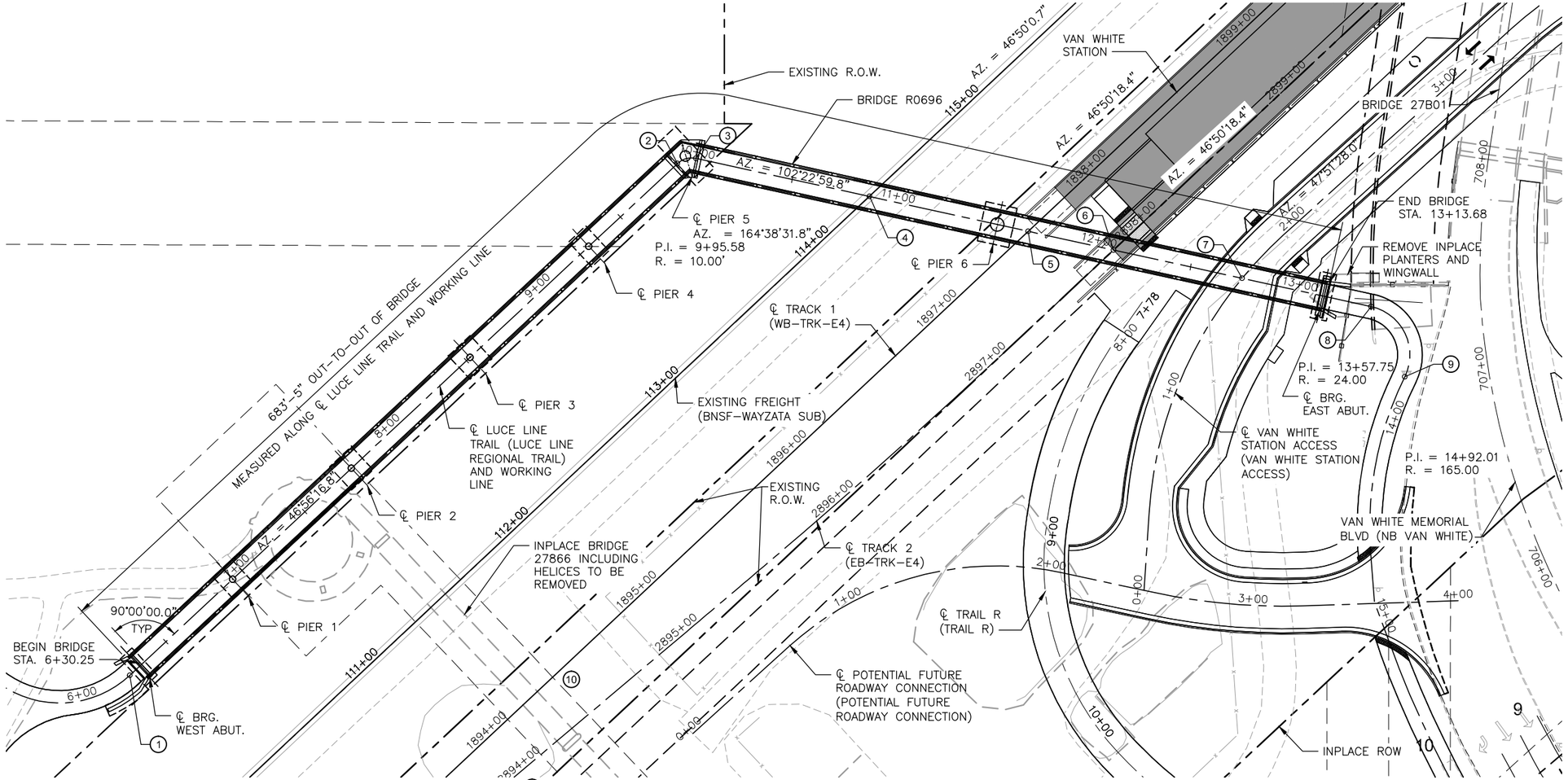

1. P.T. STA. 6+25.86
   X=522084.923
   Y=166471.469

2. P.C. STA. 9+90.32
   X=522351.209
   Y=166720.324

3. P.T. STA. 10+00.00
   X=522360.181
   Y=166722.785

4. ℄ LUCE LINE TRAIL BRIDGE (LUCE LINE REGIONAL TRAIL) STA. 10+86.16
   ℄ INPLACE FREIGHT (BNSF WAYZATA SUB) STA. 114+35.33
   X=522444.337
   Y=166704.308
   ∠=55°32'59.1"

5. ℄ LUCE LINE TRAIL BRIDGE (LUCE LINE REGIONAL TRAIL) STA. 11+65.31
   ℄ TRACK 1 (WB-TRK-E4) STA. 1897+58.50
   X=522521.643
   Y=166687.333
   ∠=55°32'41.5"

6. CONTROL POINT
   ℄ LUCE LINE TRAIL BRIDGE (LUCE LINE REGIONAL TRAIL) STA. 12+07.75
   ℄ TRACK 2 (EB-TRK-E4) STA. 2897+82.51
   X=522563.101
   Y=166678.232
   ∠=55°32'41.5"

7. ℄ LUCE LINE TRAIL BRIDGE (LUCE LINE REGIONAL TRAIL) STA. 12+71.76
   ℄ VAN WHITE STATION ACCESS (VAN WHITE STATION ACCESS) STA. 1+62.47
   X=522625.615
   Y=166664.506
   ∠=62°47'21.8"

8. P.C. STA. 13+35.99
   X=522688.352
   Y=166650.732

9. P.R.C. STA. 13+79.52
   X=522704.720
   Y=166616.656

10. THREE SPAN STEEL BEAM BRIDGE WITH CONCRETE HELICES AT EACH END TO BE REMOVED.

KEY PLAN
0 15 30 60
SCALE IN FEET

DESIGN DATA

2014 AASHTO LRFD BRIDGE DESIGN SPECIFICATIONS 7TH EDITION 2014 WITH 2015 INTERIM REVISIONS.

2009 INCLUDING 2014 INTERIMS AASHTO LRFD GUIDE SPECIFICATIONS FOR THE DESIGN OF PEDESTRIAN BRIDGES

SOUTHWEST LIGHT RAIL TRANSIT DESIGN CRITERIA (REVISION 4.0)

LOAD AND RESISTANCE FACTOR DESIGN METHOD

90 PSF PEDESTRIAN LIVE LOAD
H 10 MAINTENANCE VEHICLE LIVE LOAD

MATERIAL DESIGN PROPERTIES:
REINFORCED CONCRETE:
f'c = 4.5 KSI, n = 7.5 (SUBSTRUCTURE)
fc = 6 KSI, n = 6.5 (SUPERSTRUCTURE)
fy = 60 KSI REINFORCEMENT

STRUCTURAL STEEL:
fy = 50 KSI

DESIGN SPEED: OVER = 10 MPH

APPROXIMATE DECK AREA: 9,910 SQ. FT.

LIST OF SHEETS

NO.	DESCRIPTION
1	KEY PLAN
2–3	GENERAL PLAN AND ELEVATION
4	TRANSVERSE SECTION AND QUANTITIES
5	BRIDGE LAYOUT 1
6	ABUTMENT AESTHETIC DETAILS
7–10	WEST ABUTMENT DETAILS
11–14	WEST ABUTMENT REINFORCEMENT
15–17	EAST ABUTMENT DETAILS
18–21	EAST ABUTMENT REINFORCEMENT
22–36	PIER DETAILS AND REINFORCEMENT
37–38	SUBSTRUCTURE REINFORCEMENT
39	CORNER DETAILS
40–42	SUPERSTRUCTURE DETAILS
43	END DIAPHRAGM DETAILS
44	PREFABRICATED TRUSS
45–46	CURB DETAILS
47	APPROACH PANEL DETAILS
48	SUPERSTRUCTURE REINFORCEMENT
49	WIRE FENCE
50	NORTHEAST WINGWALL RAILING DETAILS
51	DRAINAGE DETAILS
52	WATERPROOF EXPANSION DEVICE
53	BEARING DETAILS
54	AS-BUILT BRIDGE DATA
55–56	BRIDGE DETAILS
57–59	BRIDGE SURVEY
60	BRIDGE SURVEY PLAN
61–63	BRIDGE SURVEY PROFILE
64–67	STAGING PLAN

BRIDGE NO. R0696

LUCE LINE TRAIL BRIDGE OVER BNSF RAILWAY & SOUTHWEST LRT 0.5 MI. SOUTHWEST OF JCT. OF I-94 & TH-394 IN MINNEAPOLIS

PREFABRICATED STEEL TRUSS MAIN SPANS WITH C-I-P CONCRETE DECK GIRDER APPROACH SPANS
12'-0" TRAIL
00°-00'-00.00" SKEW

BRIDGE I.D. NO. 302 (MAIN SPAN)
206 (APPROACH SPANS)

KEY PLAN
SEC 28 T 29N R 24W
CITY OF MINNEAPOLIS HENNEPIN COUNTY

JOB NO. T9N635 STATE PROJECT NO. 9909-01 MNDOT REVIEW: JOE NIETFELD

NO.	DATE	BY	CHECK	DESIGN	REVISION / SUBMITTAL

DESIGNED BY: PDC CHECKED BY: SAD
DRAWN BY: JIK CHECKED BY: SAD

AECOM Kimley»Horn

90% SUBMISSION - 1/22/16

METROPOLITAN COUNCIL

SOUTHWEST Green Line LRT Extension

CIVIL - VOLUME 4G
LUCE LINE TRAIL BRIDGE
BRIDGE R0696
KEY PLAN

DISCIPLINE: STRUCTURES
SHEET NAME: CBR0696-BRG-GPE-001

SHEET 1 OF 67

Jan. 15 2016 09:33 am V:\3400_ADC\CAD\SEGMENT E4\PLAN SHEETS\STRUCTURES\VNWHT-TRL\CBR0696-BRG-GPE-001.dwg By: Jim.Kimble

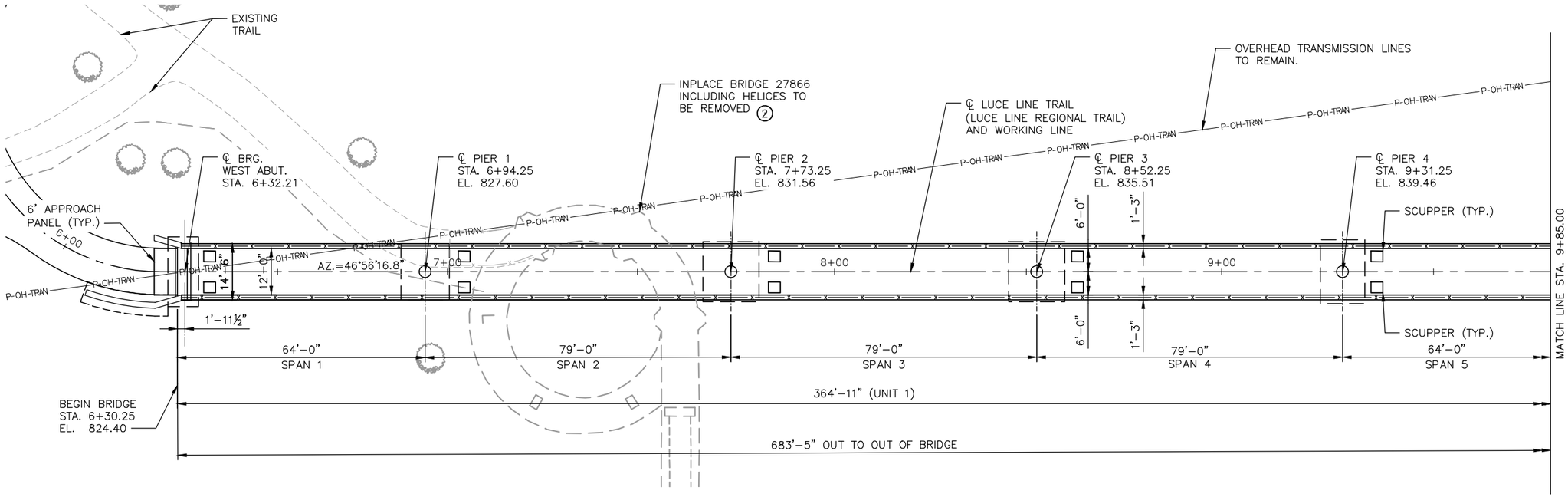

NOTES:

1. SUBSTRUCTURES SET TO THE FOLLOWING AZIMUTHS:
   W. ABUTMENT AZ. = 136°56'16.8"
2. BRIDGE 27866 IS A THREE SPAN STEEL BEAM BRIDGE WITH A CONCRETE HELIX AT EACH END.
3. SEE BORING SHEET FOR IN PLACE UTILITIES.

HATCHED AREA TO BE REMOVED UNDER GRADING PORTION OF CONTRACT.

GENERAL PLAN

0 7.5' 15' 30'
SCALE IN FEET

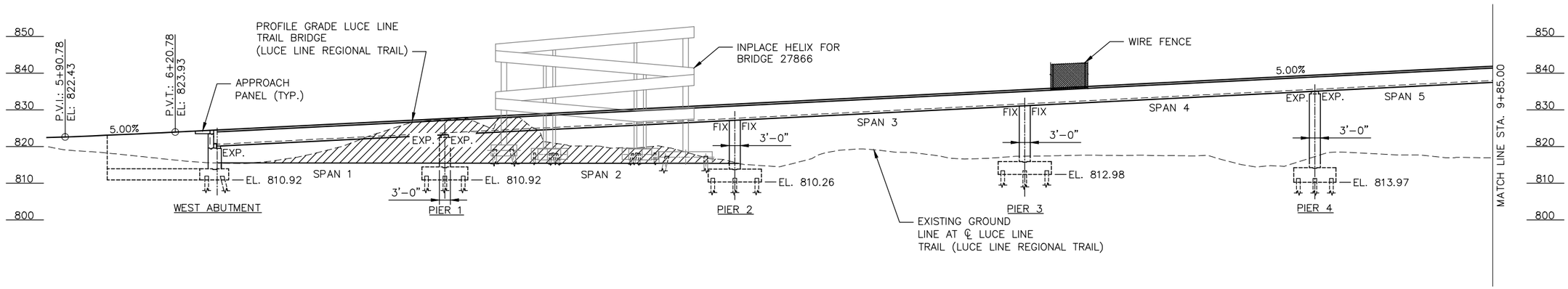

GENERAL ELEVATION

0 7.5' 15' 30'
SCALE IN FEET

NO.	DATE	BY	CHECK	DESIGN	REVISION / SUBMITTAL

DESIGNED BY: PDC | CHECKED BY: SAD
DRAWN BY: JIK | CHECKED BY: SAD

AECOM Kimley»Horn

90% SUBMISSION - 1/22/16

METROPOLITAN COUNCIL

SOUTHWEST Green Line LRT Extension

CIVIL - VOLUME 4G
LUCE LINE TRAIL BRIDGE
BRIDGE R0696
GENERAL PLAN AND ELEVATION 1

DISCIPLINE: STRUCTURES
SHEET NAME: CBR0696-BRG-GPE-002

SHEET 2 OF 67

Jan, 15 2016 09:35 am v:\3400_ADC\CAD\SEGMENT E4\PLAN SHEETS\STRUCTURES\WNWHT-TRL\CBR0696-BRG-GPE-002.dwg By: Jim.Kimble

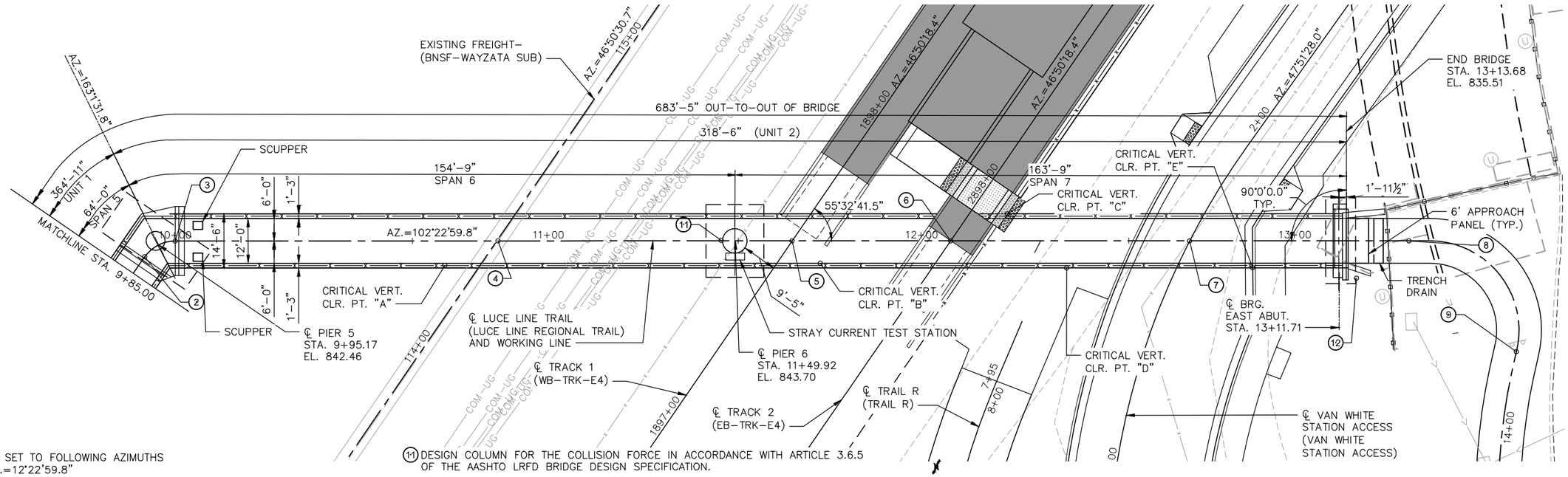

GENERAL PLAN

0 7.5' 15' 30'
SCALE IN FEET

NOTES:

1. SUBSTRUCTURES SET TO FOLLOWING AZIMUTHS
   E. ABUTMENT AZ.=12°22'59.8"
2. SEE BORING SHEET FOR INPLACE UTILITIES
3. FOR STATION AND COORDINATES OF POINT (2) THRU (9) SEE SHEET 1.

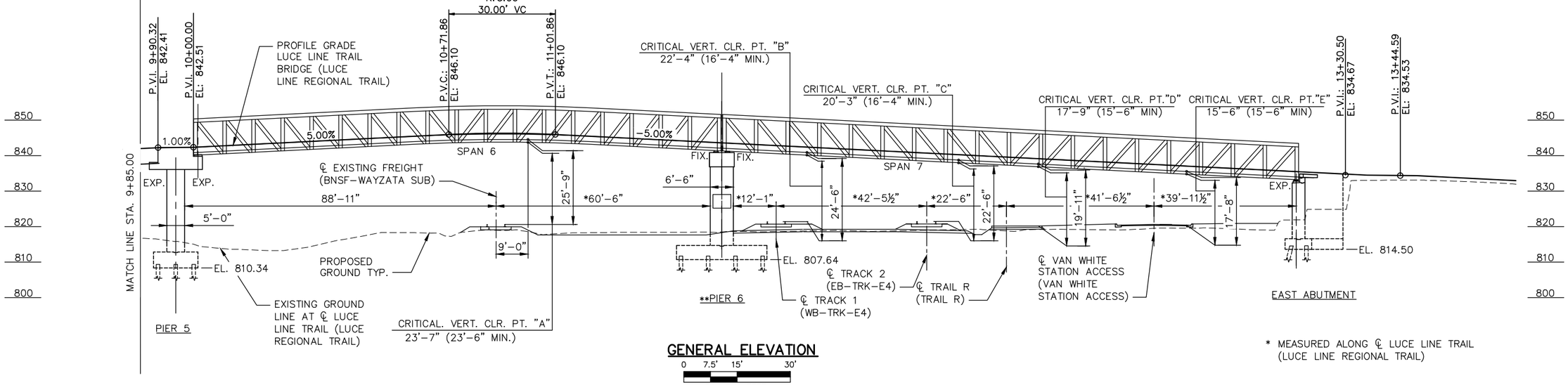

GENERAL ELEVATION

0 7.5' 15' 30'
SCALE IN FEET

* MEASURED ALONG ℄ LUCE LINE TRAIL
(LUCE LINE REGIONAL TRAIL)

NO.	DATE	BY	CHECK	DESIGN	REVISION / SUBMITTAL

DESIGNED BY: PDC CHECKED BY: SAD
DRAWN BY: JIK CHECKED BY: SAD

AECOM Kimley»Horn

90% SUBMISSION - 1/22/16

METROPOLITAN COUNCIL

SOUTHWEST Green Line LRT Extension

CIVIL - VOLUME 4G
LUCE LINE TRAIL BRIDGE
BRIDGE R0696
GENERAL PLAN AND ELEVATION 2

DISCIPLINE: STRUCTURES
SHEET NAME: CBR0696-BRG-GPE-003

SHEET 3 OF 67

Jan, 15 2016 09:38 am V:\3400_ADC\CAD\SEGMENT E4\PLAN SHEETS\STRUCTURES\VNWHT-TRL\CBR0696-BRG-GPE-003.dwg By: Jim.Kimble

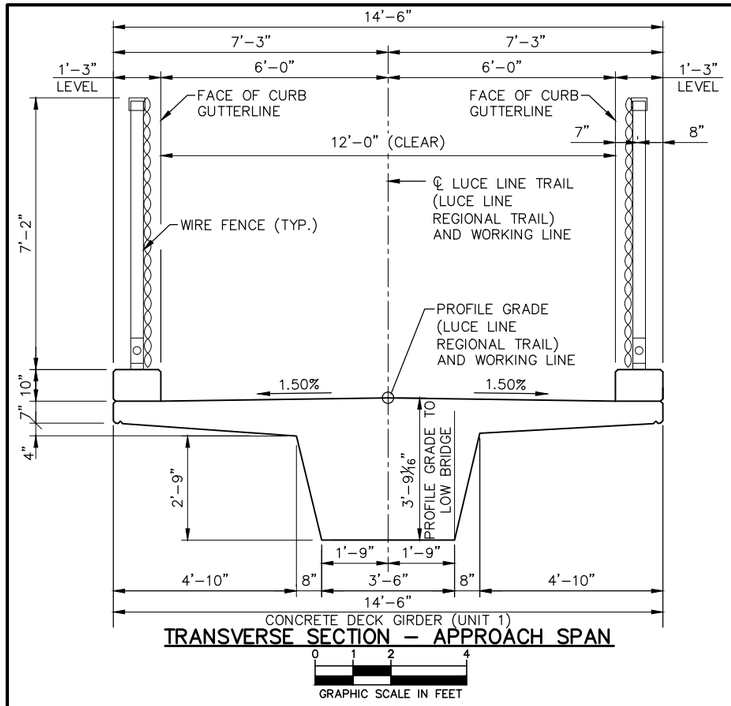

TRANSVERSE SECTION – APPROACH SPAN

0 1 2 4
GRAPHIC SCALE IN FEET

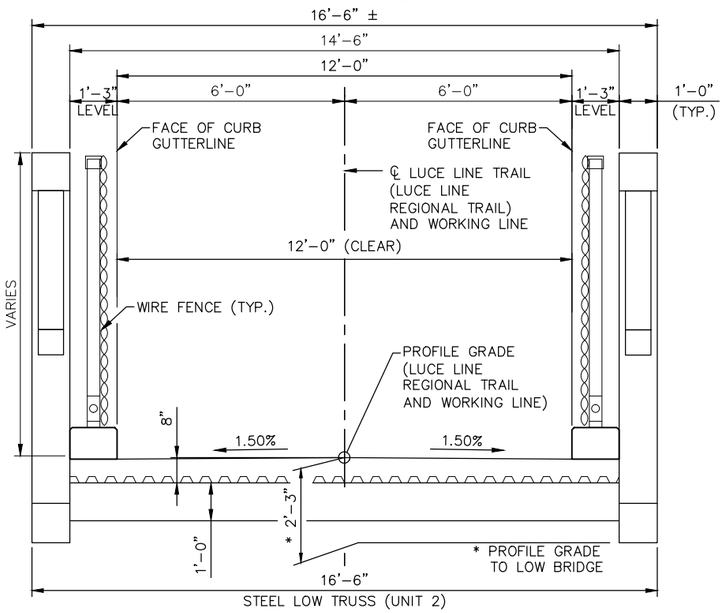

TRANSVERSE SECTION – MAIN SPAN

0 1 2 4
GRAPHIC SCALE IN FEET

CONSTRUCTION NOTES

THE 2016 EDITION OF THE MINNESOTA DEPARTMENT OF TRANSPORTATION "STANDARD SPECIFICATIONS FOR CONSTRUCTION" SHALL GOVERN.

BRIDGE SEAT REINFORCEMENT SHALL BE CAREFULLY PLACED TO AVOID INTERFERENCE WITH DRILLING HOLES FOR ANCHOR RODS. THE SUPERSTRUCTURE SHALL BE ERECTED IN FINAL POSITION PRIOR TO DRILLING HOLES FOR AND PLACING ANCHOR RODS.

THE BAR SIZES SHOWN IN THESE PLANS ARE IN U.S. CUSTOMARY DESIGNATIONS. THE FIRST DIGIT OR THE FIRST TWO DIGITS OF EACH BAR MARK INDICATE THE BAR SIZE.

BARS MARKED WITH THE SUFFIX "E" SHALL BE EPOXY COATED IN ACCORDANCE WITH SPEC. 3301.

THE PILE LOADS SHOWN IN THESE PLANS AND THE CORRESPONDING NOMINAL PILE RESISTANCE (Rn) WERE COMPUTED USING LRFD METHODOLOGY. PILE BEARING RESISTANCE DETERMINED IN THE FIELD SHALL INCORPORATE THE METHODS AND/OR FORMULAS DESCRIBED IN THE SPECIAL PROVISIONS.

THE SUBSURFACE UTILITY INFORMATION IN THIS PLAN IS UTILITY QUALITY LEVEL D. THIS UTILITY QUALITY LEVEL WAS DETERMINED ACCORDING TO GUIDELINES OF CI/ASCE 38-02, ENTITLED "STANDARD GUIDELINES FOR THE COLLECTION AND DEPICTION OF EXISTING SUBSURFACE UTILITY DATA.

STRAY CURRENT CONTROL NOTES

THE FOLLOWING STRAY CURRENT CONTROL NOTES ARE A SUPPLEMENT TO THE SYSTEMWIDE ELECTRICAL DRAWINGS – SEE SYSTEMS DRAWINGS, VOLUME 12 FOR ASSOCIATED DETAILS AND DOCUMENT CERTIFICATION RELATED TO STRAY CURRENT REQUIREMENTS.

NO SPECIAL STRAY CURRENT CORROSION CONTROL MEASURES REQUIRED FOR CONCRETE BOX OR STEEL TRUSS STRUCTURES.

NO SPECIAL STRAY CURRENT CORROSION CONTROL MEASURES REQUIRED AT EITHER ABUTMENT OR PIERS 1 THROUGH 5.

BLACK REBAR IN THE FOOTING OF PIER 6 SHALL BE MADE ELECTRICALLY CONTINUOUS WITHIN THE FOOTING. SEE SHEET E0-SYS-CORR-DTL-001.

STEEL SHELLS OF C-I-P PILES IN THE PIER 6 FOOTING SHALL BE MADE ELECTRICALLY CONTINUOUS WITH WELDED REBAR IN FOOTING. SEE DETAILS ON SHEET E0-SYS-CORR-DTL-008.

INSTALL STRAY CURRENT TEST STATION HOUSING TWO #1/0 AWG CABLES FROM ELECTRICALLY CONTINUOUS REBAR AND H-PILES IN FOOTING AND ONE #14 HMWPE CABLE FROM COPPER/COPPER SULFATE REFERENCE CELL. COPPER/COPPER SULFATE REFERENCE CELL SHALL BE INSTALLED IN SOIL WITHIN 1 FOOT OF PILE AND 1 FOOT BELOW BOTTOM OF FOOTING. SEE DETAIL 4 ON SHEET E0-SYS-CORR-DTL-002 AND DETAIL ON SHEET E0-SYS-CORR-DTL-026.

ALL STRAY CURRENT TEST STATIONS SHALL BE INSTALLED AT LOCATIONS WHERE THEY WILL BE ACCESSIBLE AFTER COMPLETION OF ALL CONSTRUCTION ACTIVITIES AND DURING REVENUE LRT OPERATIONS.

ELECTRICAL ISOLATION SHALL BE MAINTAINED BETWEEN THE EPOXY COATED REBAR IN THE COLUMN OF PIER 6 AND THE BLACK REBAR IN THE FOOTING OF PIER 6.

THE CONCRETE/SOIL INTERFACE ALONG EACH STEEL SLEEVE FOR THE C-I-P PILES UNDER THE FOOTINGS FOR THE ABUTMENTS AND PIERS 1 THOUGH 6 SHALL BE COATED WITH A DIELECTRIC COATING OR HEAT SHRINK SLEEVE. THE COATING SHALL EXTEND INTO THE CONCRETE FOOTING AT LEAST 6 INCHES AND EXTEND A MINIMUM OF 18 INCHES INTO THE SOIL ALONG THE EXTERNAL PILE SURFACE BELOW THE BOTTOM OF THE FOOTING.

GROUNDING NOTES

SEE SHEETS ELE-SITE-SCH-504, ELE-SITE-DTL-006, ELE-SITE-DTL-601 AND ELE-SITE-DTL-602 FOR ADDITIONAL FENCE GROUNDING INFORMATION. FOR BRIDGES, ABUTMENTS AND RETAINING WALL THAT DON'T HAVE STRAY CURRENT SYSTEMS, GROUND FENCE AS SHOWN IN THE WIRE FENCE DETAIL.

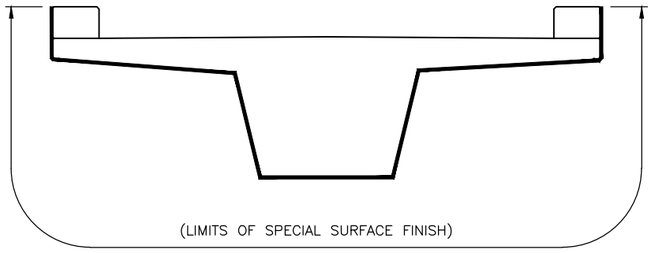

NOTES

——— DENOTES SURFACES RECEIVING SPECIAL SURFACE FINISH (COLOR SYSTEM) TYPE 2.

LIMITS OF SPECIAL SURFACE FINISH (COLOR SYSTEM), TYPE 2

SCHEDULE OF QUANTITIES

SPEC. SECTION	ITEM	UNIT	QUANTITY
–	CONSTRUCT BRIDGE R0696	LUMP SUM	LS

COMPONENT ITEM SUMMARY (BRIDGE R0696)

SPEC. SECTION (2)	COMPONENT ITEM	UNIT (1)	QUANTITY (1)
2104	REMOVE CONCRETE RETAINING WALL	LIN. FT./SQ. FT.	
2104	REMOVE FOOTING	LIN. FT.	
2104	REMOVE CONCRETE RAILING	LIN. FT.	
2401	STRUCTURAL CONCRETE (3B52)	CU. YD.	
2401	STRUCTURAL CONCRETE (1G52)	CU. YD.	
2401	BRIDGE SLAB CONCRETE (3YHPC-M)	CU. YD.	
2401	REINFORCEMENT BARS	POUND	
2401	REINFORCEMENT BARS (EPOXY COATED)	POUND	
2401	SPECIAL SURFACE FINISH (COLOR SYSTEM)	SQ. FT.	
2402	EXPANSION JOINT DEVICES TYPE 4	LIN. FT.	
2402	ELASTOMERIC BEARING PAD	EACH	
2402	PEDESTRIAN BRIDGE (SUPERSTRUCTURE)	EACH	
2402	ORNAMENTAL METAL RAILING	LIN. FT.	
2411	ANTI-GRAFFITI COATING	SQ. FT.	
2433	REMOVE ORNAMENTAL METAL RAILING	LIN. FT.	
2451	AGGREGATE BACKFILL (CV)	CU. YD.	
2452	C-I-P CONCRETE PILING DELIVERED, 12"	LIN. FT.	
2452	C-I-P CONCRETE PILING DRIVEN, 12"	LIN. FT.	
2452	C-I-P CONCRETE TEST PILE 102' LONG, 12"	EACH	
2452	C-I-P CONCRETE TEST PILE 106' LONG, 12"	EACH	
2452	C-I-P CONCRETE TEST PILE 104' LONG, 12"	EACH	
2452	C-I-P CONCRETE TEST PILE 108' LONG, 12"	EACH	
2452	C-I-P CONCRETE TEST PILE 112' LONG, 12"	EACH	
2452	C-I-P CONCRETE TEST PILE 98' LONG, 12"	EACH	
2502	DRAINAGE SYSTEM TYPE (B910)	LS	
2502	DRAINAGE SYSTEM TYPE (R-4105-A)	LS	
2557	WIRE FENCE	LIN. FT.	

(1) QUANTITIES LISTED FOR THE COMPONENT ITEMS OF THE LUMP SUM BRIDGE R0696 ITEM ARE FOR INFORMATION PURPOSES. ANY ADDITIONAL ITEMS OR CHANGES IN QUANTITIES REQUIRED SHALL BE PROVIDED BY THE CONTRACTOR WITH NO ADDITIONAL COMPENSATION.

(2) MEASUREMENT AND PAYMENT FOR COMPONENT ITEMS SHALL BE PART OF THE LUMP SUM PAYMENT FOR BRIDGE R0696. REFER TO MNDOT STANDARD SPECIFICATION OR SPECIAL PROVISION FOR TECHNICAL SPECIFICATION REQUIREMENTS FOR ALL PROVISIONS OTHER THAN MEASUREMENT & PAYMENT REQUIREMENTS.

NO.	DATE	BY	CHECK	DESIGN	REVISION / SUBMITTAL

DESIGNED BY: PDC CHECKED BY: SAD
DRAWN BY: JIK CHECKED BY: SAD

AECOM Kimley»Horn

90% SUBMISSION - 1/22/16

METROPOLITAN COUNCIL

SOUTHWEST Green Line LRT Extension

CIVIL - VOLUME 4G
LUCE LINE TRAIL BRIDGE
BRIDGE R0696
TRANSVERSE SECTION AND QUANTITIES

DISCIPLINE: STRUCTURES
SHEET NAME: CBR0696-BRG-TRN-001

SHEET 4 OF 67

Jan, 15 2016 09:38 am V:\3400_ADC\CAD\SEGMENT E4\PLAN SHEETS\STRUCTURES\VNWHT-TRL\CBR0696-BRG-TRN-001.dwg By: Jim.Kimble

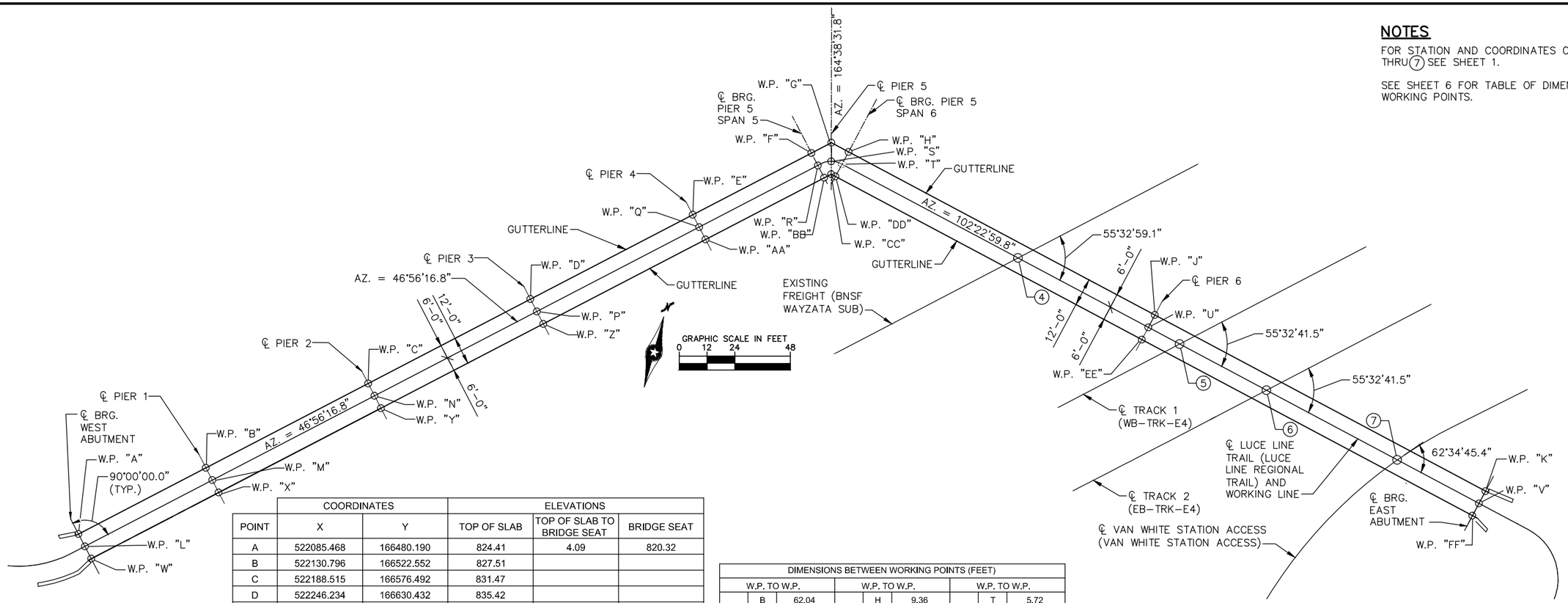

NOTES

FOR STATION AND COORDINATES OF CONTROL POINTS (4) THRU (7) SEE SHEET 1.

SEE SHEET 6 FOR TABLE OF DIMENSIONS BETWEEN WORKING POINTS.

POINT	COORDINATES X	COORDINATES Y	ELEVATIONS TOP OF SLAB	ELEVATIONS TOP OF SLAB TO BRIDGE SEAT	ELEVATIONS BRIDGE SEAT
A	522085.468	166480.190	824.41	4.09	820.32
B	522130.796	166522.552	827.51		
C	522188.515	166576.492	831.47		
D	522246.234	166630.432	835.42		
E	522303.952	166684.373	839.37		
F	522346.174	166723.831	842.26	4.09	838.17
G	522353.255	166730.448	842.34		
H	522362.400	166728.440	842.47	2.64	839.83
J	522507.899	166696.495	843.61	2.64	840.97
K	522665.931	166661.797	835.52	2.64	832.88
L	522089.564	166475.806	824.50	4.18	820.32
M	522134.893	166518.168	827.60	4.18	823.42
N	522192.612	166572.108	831.56	4.18	827.38
P	522250.330	166626.049	835.51	4.18	831.33
Q	522308.049	166679.989	839.46	4.18	835.28
R	522350.271	166719.447	842.35	4.18	838.17
S	522355.396	166722.662	842.46		
T	522361.113	166722.580	842.56	2.75	839.81
U	522506.611	166690.634	843.70	2.75	840.95
V	522664.643	166655.938	835.61	2.75	832.86
W	522093.661	166471.423	824.41	4.09	820.32
X	522138.990	166513.784	827.51		
Y	522196.708	166567.725	831.47		
Z	522254.427	166621.665	835.42		
AA	522312.146	166675.605	839.37		
BB	522354.368	166715.064	842.26	4.09	838.17
CC	522356.841	166717.374	842.38		
DD	522359.826	166716.720	842.47	2.64	839.83
EE	522505.324	166684.774	843.61	2.64	840.97
FF	522663.356	166650.076	835.52	2.64	832.88

DIMENSIONS BETWEEN WORKING POINTS (FEET)

W.P. TO W.P.			W.P. TO W.P.			W.P. TO W.P.		
A	B	62.04	G	H	9.36	S	T	5.72
	L	6.00		S	8.07		DD	7.41
	M	62.33		T	11.12	T	U	148.97
	W	12.00		CC	13.56		EE	149.09
	X	63.19		DD	15.22	U	V	161.79
B	C	79.00	H	J	148.97		FF	161.91
	M	6.00		T	6.00	V	FF	6.00
	N	79.23		U	149.09	W	X	62.04
	X	12.00		DD	12.00	X	Y	79.00
	Y	79.91		EE	149.95	Y	Z	79.00
c	D	79.00	J	K	161.79	Z	AA	79.00
	N	6.00		U	6.00	AA	BB	57.79
	P	79.23		V	161.90	BB	CC	3.39
	Y	12.00		EE	12.00	CC	DD	3.05
	Z	79.91		FF	162.24	DD	EE	148.97
D	E	79.00	K	V	6.00	EE	FF	161.79
	P	6.00		FF	12.00			
	Q	79.23	L	M	62.04			
	Z	12.00		X	62.33			
	AA	79.91	M	N	79.00			
E	F	57.79		Y	79.23			
	Q	6.00	N	P	79.00			
	R	58.10		Z	79.23			
	AA	12.00	P	Q	79.00			
	BB	59.02		AA	79.23			
F	G	9.69	Q	R	57.79			
	R	6.00		BB	58.10			
	S	9.30	R	S	6.05			
	BB	12.00		CC	6.90			
	CC	12.48						

TOP OF ROADWAY TO BRIDGE SEAT

	DECK THICKNESS (IN)	STOOL HEIGHT (IN)	BEAM HEIGHT (IN)	BEARING HEIGHT (IN)	TOTAL INCHES	TOTAL FEET
WEST ABUTMENT	N/A	N/A	45⅛	5⅛	50¼	4.19
PIER 1	N/A	N/A	45⅛	5¼	50⅜	4.20
PIER 2	N/A	N/A	45⅛	N/A	45⅛	3.76
PIER 3	N/A	N/A	45⅛	N/A	45⅛	3.76
PIER 4	N/A	N/A	45⅛	5¼	50⅜	4.20
PIER 5	N/A	N/A	45⅛	5⅛	50¼	4.19
PIER 5	N/A	N/A	27	6*	33	2.75
PIER 6	N/A	N/A	27	6*	33	2.75
EAST ABUTMENT	N/A	N/A	27	6*	33	2.75

*BEARING HEIGHT ASSUMED FOR TRUSS BRIDGE. COORDINATE WITH BRIDGE MANUFACTURER.

NO.	DATE	BY	CHECK	DESIGN	REVISION / SUBMITTAL

DESIGNED BY: PDC CHECKED BY: SAD
DRAWN BY: JIK CHECKED BY: SAD

AECOM Kimley»Horn

90% SUBMISSION - 1/22/16

METROPOLITAN COUNCIL

SOUTHWEST Green Line LRT Extension

CIVIL - VOLUME 4G
LUCE LINE TRAIL BRIDGE
BRIDGE R0696
BRIDGE LAYOUT 1

DISCIPLINE: STRUCTURES

SHEET NAME: CBR0696-BRG-SUP-001

SHEET 5 OF 67

Jan. 15 2016 09:39 am V:\3400_ADC\CAD\SEGMENT E4\PLAN SHEETS\STRUCTURES\VNWHT-TRL\CBR0696-BRG-SUP-001.dwg By: Jim.Kimble

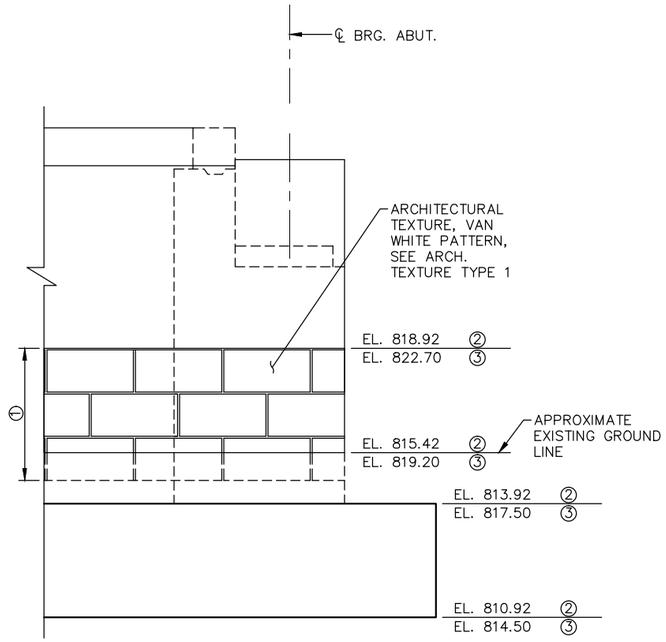

ELEVATION OF WINGWALL

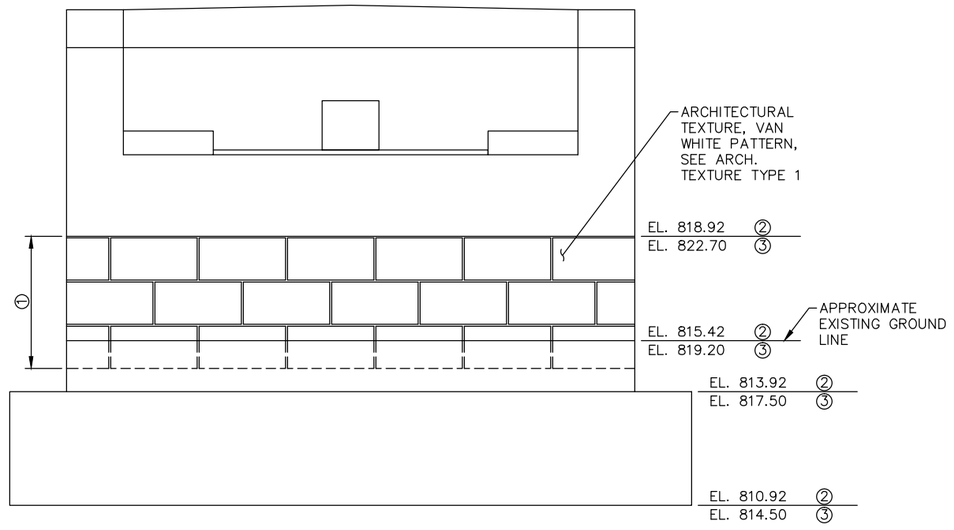

ELEVATION OF ABUTMENT

① LIMITS OF ARCHITECTURAL TEXTURE, VAN WHITE PATTERN AND SPECIAL SURFACE FINISH (COLOR SYSTEM), TYPE 1 (FEDERAL COLOR 32648). ALL OTHER EXPOSED ABUTMENT, RETAINING WALL AND WINGWALL SURFACES SHALL RECEIVE SPECIAL SURFACE FINISH (COLOR SYSTEM), TYPE 2 (FEDERAL COLOR 33717).

② WEST ABUTMENT.

③ EAST ABUTMENT.

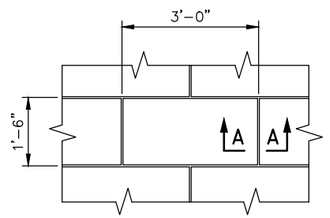

ARCHITECTURAL TEXTURE, TYPE 1

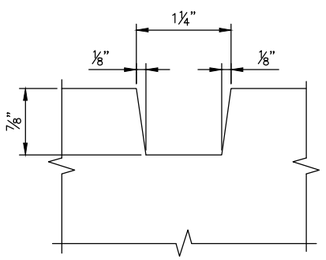

TYPICAL SECTION A–A

NO.	DATE	BY	CHECK	DESIGN	REVISION / SUBMITTAL

DESIGNED BY: PDC CHECKED BY: SAD
DRAWN BY: JIK CHECKED BY: SAD

AECOM Kimley»Horn

90% SUBMISSION - 1/22/16

METROPOLITAN COUNCIL

SOUTHWEST Green Line LRT Extension

CIVIL - VOLUME 4G
LUCE LINE TRAIL BRIDGE
BRIDGE R0696
ABUTMENT AESTHETIC DETAILS

DISCIPLINE: STRUCTURES
SHEET NAME: CBR0696-BRG-ABT-001

SHEET 6 OF 67

Jan, 15 2016 09:39 am v:\3400_ADC\CAD\SEGMENT E4\PLAN SHEETS\STRUCTURES\VNWHT-TRL\CBR0696-BRG-ABT-001.dwg By: Jim.Kimble

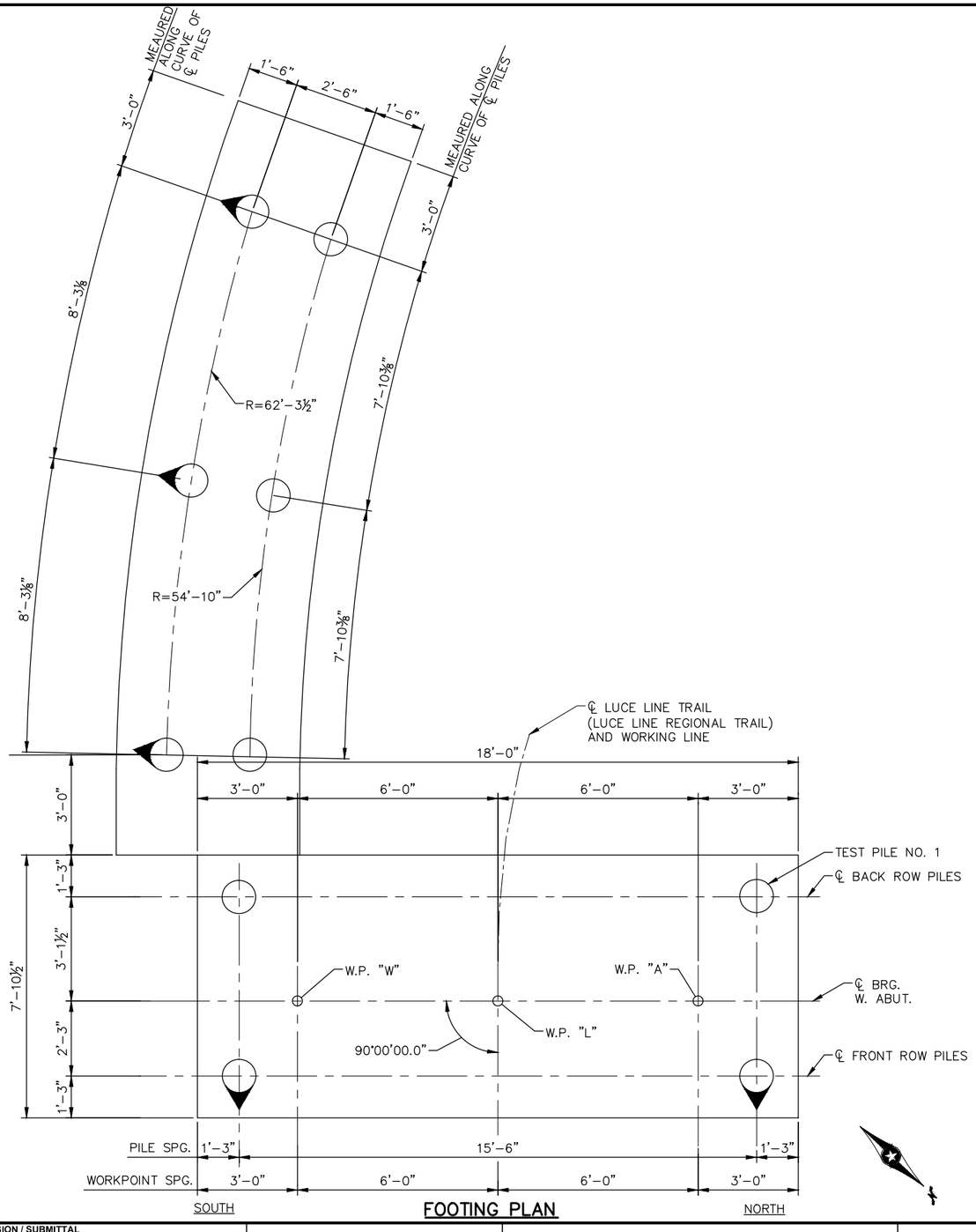

FOOTING PLAN

WEST ABUTMENT COMPUTED PILE LOAD - TONS/PILE	
FACTORED DEAD LOAD + EARTH PRESSURE	61.2
FACTORED LIVE LOAD	18.1
* FACTORED DESIGN LOAD	79.3

* BASED ON STRENGTH I (FINAL 2) LOAD COMBINATION.

WEST ABUTMENT REQUIRED NOMINAL PILE BEARING RESISTANCE FOR C-I-P PILES Rn - TONS/PILE		
FIELD CONTROL METHOD	φdyn	* Rn
PDA	0.65	122

* Rn = (FACTORED DESIGN LOAD) / φdyn

PILE NOTES

1–12" ø C–I–P TEST PILE 102 FEET LONG
3–12" ø C–I–P PILES EST. LENGTH 92 FEET LONG
4–12" ø C–I–P PILES REQ'D FOR WEST ABUTMENT

PILE SPACING SHOWN IS AT BOTTOM OF FOOTING.

PILES MARKED THUS ⚲ TO BE BATTERED 3 INCHES PER FOOT IN DIRECTION SHOWN.

ALL PILES TO BE 12" DIA. CAST–IN–PLACE CONCRETE.

PILES TO HAVE A NOMINAL DIAMETER OF 12" AND A MINIMUM WALL THICKNESS OF ¼".

FOR PILE SPLICE DETAILS, SEE B–DETAIL B201.

NO.	DATE	BY	CHECK	DESIGN	REVISION / SUBMITTAL

DESIGNED BY: PDC CHECKED BY: SAD
DRAWN BY: JIK CHECKED BY: SAD

AECOM Kimley»Horn

90% SUBMISSION - 01/22/16

METROPOLITAN COUNCIL

SOUTHWEST Green Line LRT Extension

CIVIL - VOLUME 4G
LUCE LINE TRAIL BRIDGE
BRIDGE R0696
WEST ABUTMENT DETAILS 1

DISCIPLINE: STRUCTURES
SHEET NAME: CBR0696-BRG-ABT-002

SHEET 7 OF 67

Jan. 15 2016 09:40 am V:\3400_ADC\CAD\SEGMENT E4\PLAN SHEETS\STRUCTURES\VNWHT-TRL\CBR0696-BRG-ABT-002.dwg By: Jim.Kimble

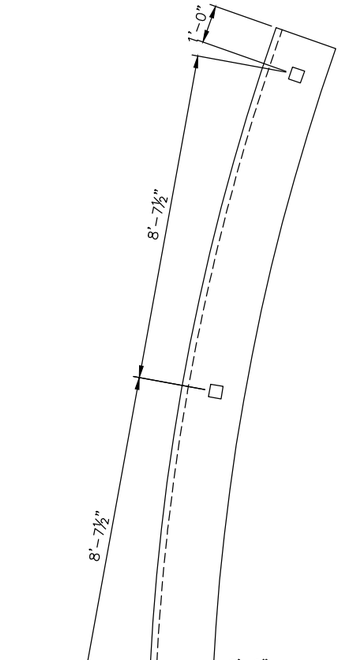

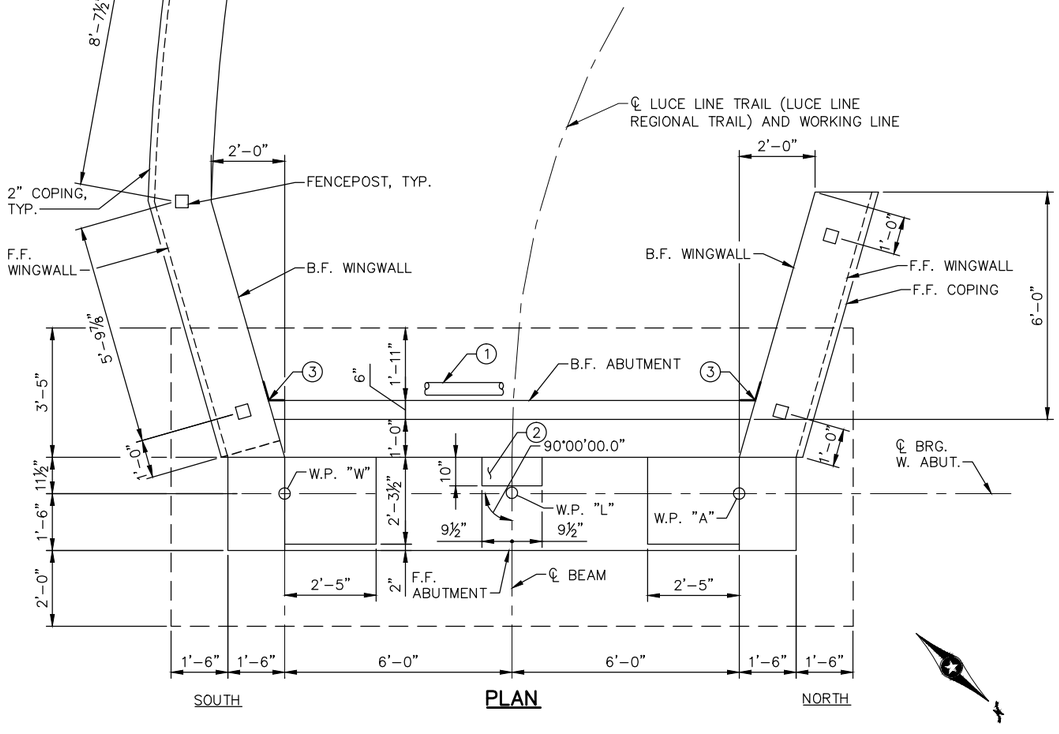

PLAN

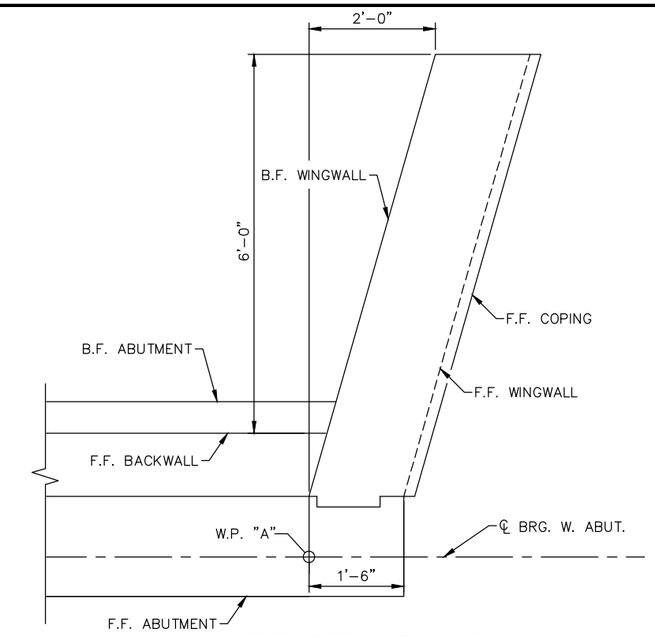

NORTHWEST WINGWALL PLAN

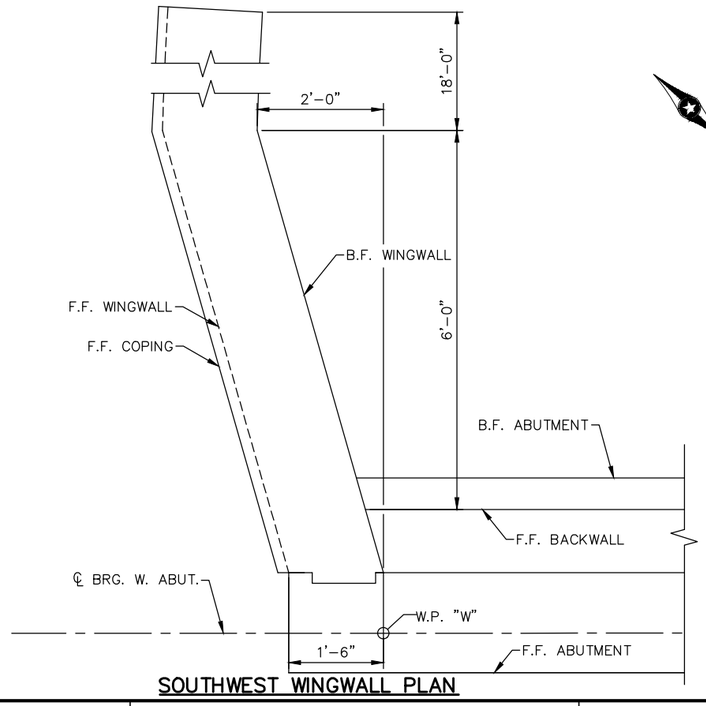

SOUTHWEST WINGWALL PLAN

NOTES

1. 4" DIAMETER PERFORATED DRAIN PIPE. SEE DETAIL B910.
2. SIDES OF SHEAR KEY TO BE VERTICAL AND TOP OF SHEAR KEY TO BE LEVEL IN BOTH DIRECTIONS.
3. MEMBRANE WATERPROOFING SYSTEM PER SPEC. 2481.3.B.
4. BRIDGE SLAB CONCRETE 3Y42.
5. STRUCTURAL CONCRETE 3B52.
6. STRUCTURAL CONCRETE 1G52.
7. ATTACH WIRE FENCE ANCHORAGE TO PILE WITH SOLID NO. 6 GAGE COPPER WIRE WITH AN APPROVED TYPE CLAMP OR BRAZING (ONE ANCHORAGE PER END OF RAIL).
8. GROUND BOTH SIDES OF EXPANSION JOINT PIPE SLEEVE IF PRESENT.

NO.	DATE	BY	CHECK	DESIGN	REVISION / SUBMITTAL

DESIGNED BY: PDC | CHECKED BY: SAD
DRAWN BY: JIK | CHECKED BY: SAD

AECOM Kimley»Horn

90% SUBMISSION - 1/22/16

METROPOLITAN COUNCIL

SOUTHWEST Green Line LRT Extension

CIVIL - VOLUME 4G
LUCE LINE TRAIL BRIDGE
BRIDGE R0696
WEST ABUTMENT DETAILS 2

DISCIPLINE: STRUCTURES

SHEET NAME: CBR0696-BRG-ABT-003

SHEET 8 OF 67

Jan, 15 2016 09:40 am v:\3400_ADC\CAD\SEGMENT E4\PLAN SHEETS\STRUCTURES\VNWHT-TRL\CBR0696-BRG-ABT-003.dwg By: Jim.Kimble

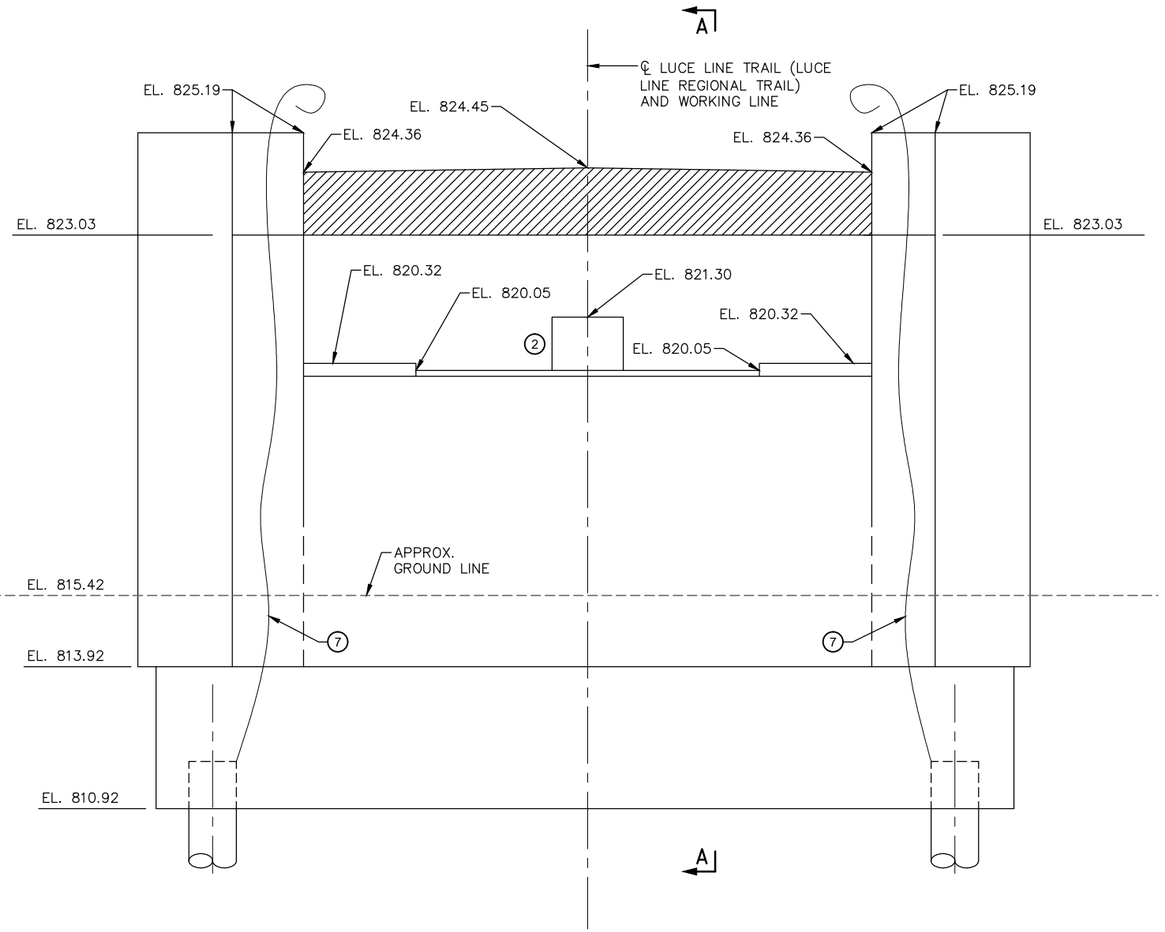

ELEVATION

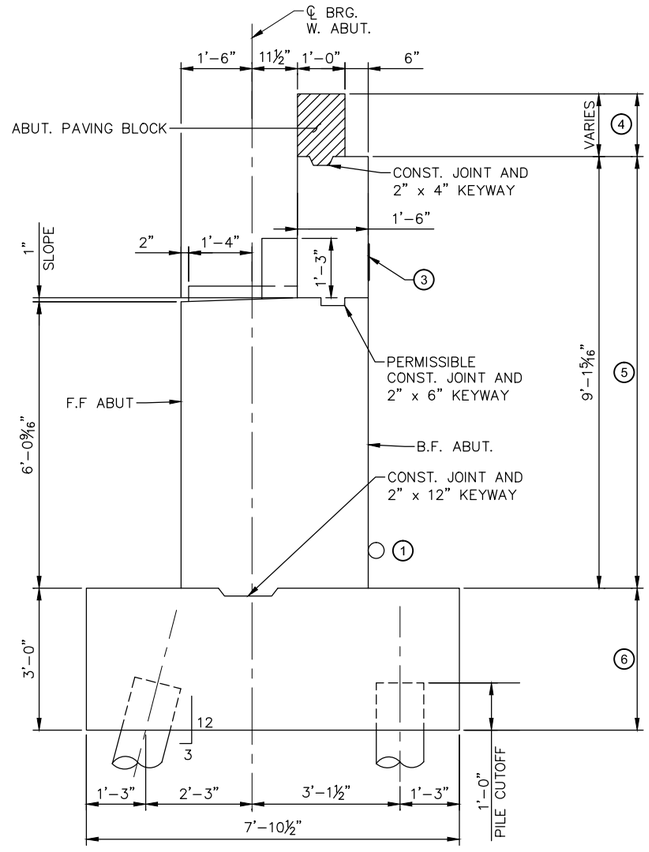

SECTION A–A

NOTES

1. 4" DIAMETER PERFORATED DRAIN PIPE. SEE DETAIL B910.
2. SIDES OF SHEAR KEY TO BE VERTICAL AND TOP OF SHEAR KEY TO BE LEVEL IN BOTH DIRECTIONS.
3. MEMBRANE WATERPROOFING SYSTEM PER SPEC. 2481.3.B.
4. BRIDGE SLAB CONCRETE 3Y42.
5. STRUCTURAL CONCRETE 3B52.
6. STRUCTURAL CONCRETE 1G52.
7. ATTACH WIRE FENCE ANCHORAGE TO PILE WITH SOLID NO. 6 GAGE COPPER WIRE WITH AN APPROVED TYPE CLAMP OR BRAZING (ONE ANCHORAGE PER END OF RAIL).
8. GROUND BOTH SIDES OF EXPANSION JOINT PIPE SLEEVE IF PRESENT.

NO.	DATE	BY	CHECK	DESIGN	REVISION / SUBMITTAL

DESIGNED BY: PDC | CHECKED BY: SAD
DRAWN BY: JIK | CHECKED BY: SAD

AECOM Kimley»Horn

90% SUBMISSION - 01/22/16

METROPOLITAN COUNCIL

SOUTHWEST Green Line LRT Extension

CIVIL - VOLUME 4G
LUCE LINE TRAIL BRIDGE
BRIDGE R0696
WEST ABUTMENT DETAILS 3

DISCIPLINE: STRUCTURES

SHEET NAME: CBR0696-BRG-ABT-004

SHEET 9 OF 67

Jan. 15 2016 09:40 am V:\3400_ADC\CAD\SEGMENT E4\PLAN SHEETS\STRUCTURES\VNWHT-TRL\CBR0696-BRG-ABT-004.dwg By: Jim.Kimble

NOTES

1. 4" DIAMETER PERFORATED DRAIN PIPE. SEE DETAIL B910.
2. SIDES OF SHEAR KEY TO BE VERTICAL AND TOP OF SHEAR KEY TO BE LEVEL IN BOTH DIRECTIONS.
3. MEMBRANE WATERPROOFING SYSTEM PER SPEC. 2481.3.B.
4. BRIDGE SLAB CONCRETE 3Y42.
5. STRUCTURAL CONCRETE 3B52.
6. STRUCTURAL CONCRETE 1G52.
7. ATTACH WIRE FENCE ANCHORAGE TO PILE WITH SOLID NO. 6 GAGE COPPER WIRE WITH AN APPROVED TYPE CLAMP OR BRAZING (ONE ANCHORAGE PER END OF RAIL).
8. GROUND BOTH SIDES OF EXPANSION JOINT PIPE SLEEVE IF PRESENT.

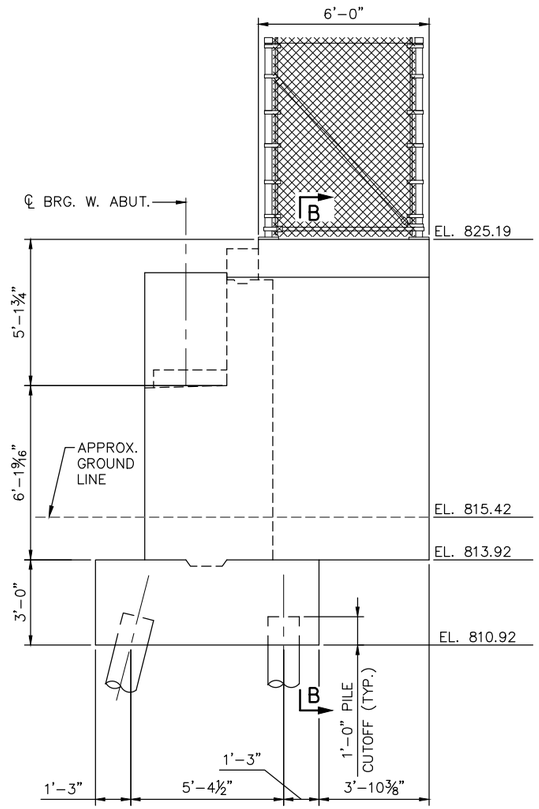

NORTHWEST WINGWALL ELEVATION

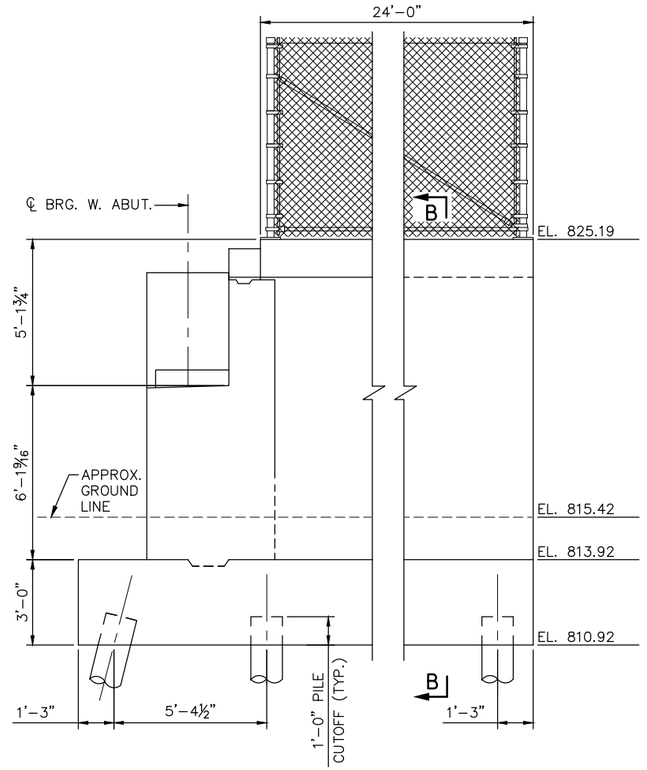

SOUTHWEST WINGWALL ELEVATION

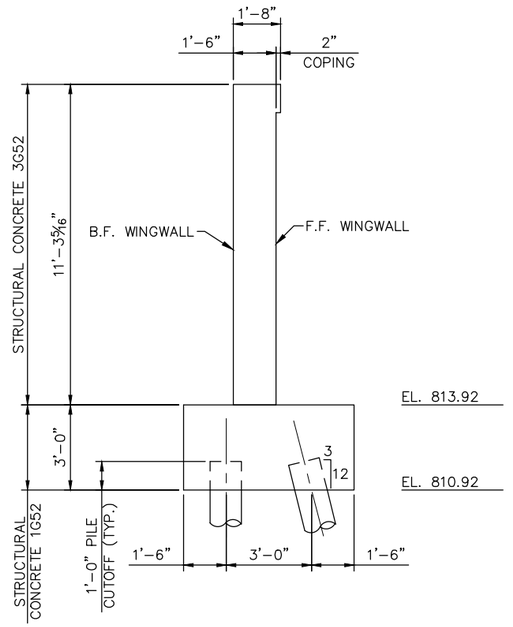

SECTION B–B

NO.	DATE	BY	CHECK	DESIGN	REVISION / SUBMITTAL

DESIGNED BY: PDC | CHECKED BY: SAD
DRAWN BY: JIK | CHECKED BY: SAD

AECOM Kimley»Horn

90% SUBMISSION - 1/22/16

METROPOLITAN COUNCIL

SOUTHWEST Green Line LRT Extension

CIVIL - VOLUME 4G
LUCE LINE TRAIL BRIDGE
BRIDGE R0696
WEST ABUTMENT DETAILS 4

DISCIPLINE: STRUCTURES
SHEET NAME: CBR0696-BRG-ABT-005

SHEET 10 OF 67

Jan. 15 2016 09:41 am V:\3400_ADC\CAD\SEGMENT E4\PLAN SHEETS\STRUCTURES\VNWHT-TRL\CBR0696-BRG-ABT-005.dwg By: Jim.Kimble

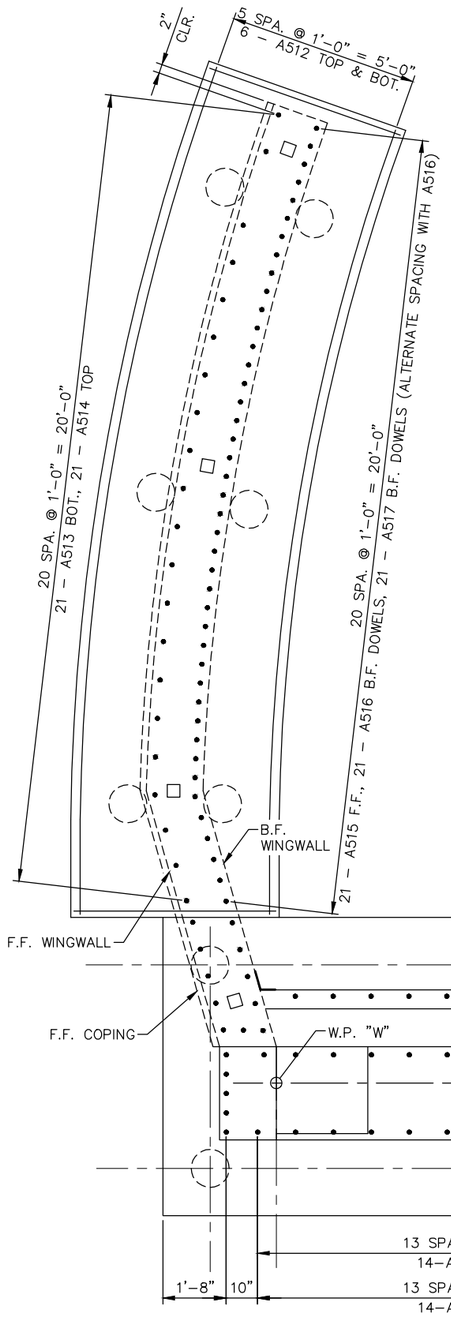

FOOTING PLAN

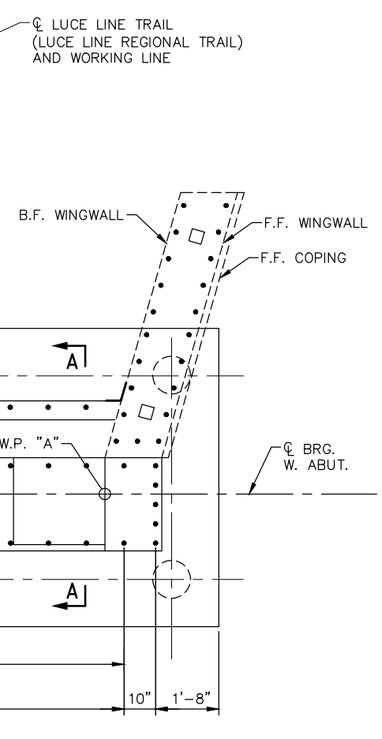

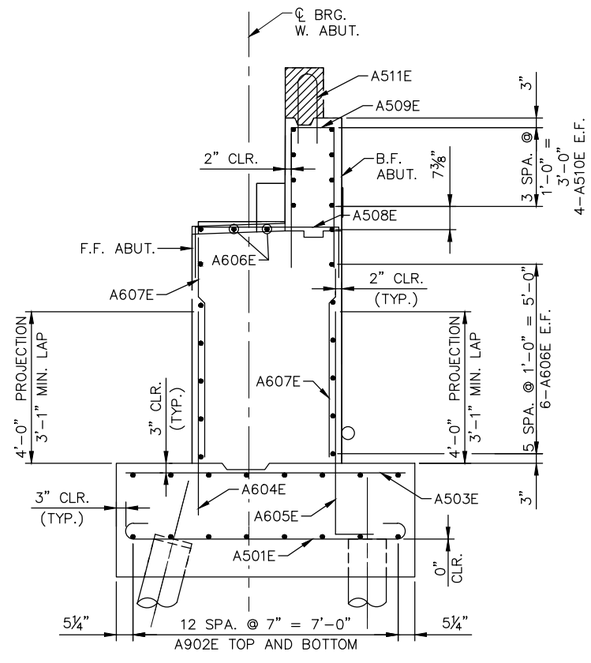

TYPICAL PEDESTAL SECTION

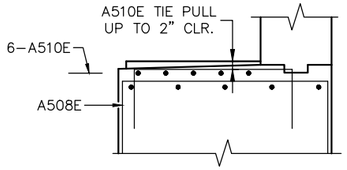

SECTION A-A

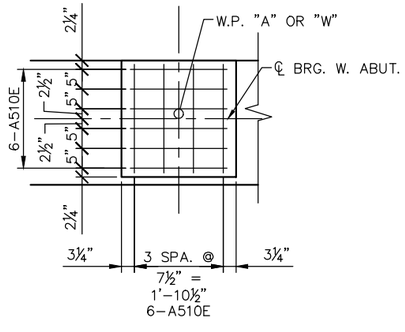

TYPICAL PEDESTAL PLAN

NO.	DATE	BY	CHECK	DESIGN	REVISION / SUBMITTAL

DESIGNED BY: PDC | CHECKED BY: SAD
DRAWN BY: JIK | CHECKED BY: SAD

AECOM Kimley»Horn

90% SUBMISSION - 1/22/16

METROPOLITAN COUNCIL

SOUTHWEST Green Line LRT Extension

CIVIL - VOLUME 4G
LUCE LINE TRAIL BRIDGE
BRIDGE R0696
WEST ABUTMENT REINFORCEMENT 1

DISCIPLINE: STRUCTURES

SHEET NAME: CBR0696-BRG-ABT-006

SHEET 11 OF 67

Jan, 15 2016 09:41 am V:\3400_ADC\CAD\SEGMENT E4\PLAN SHEETS\STRUCTURES\VNWHT-TRL\CBR0696-BRG-ABT-006.dwg By: Jim.Kimble

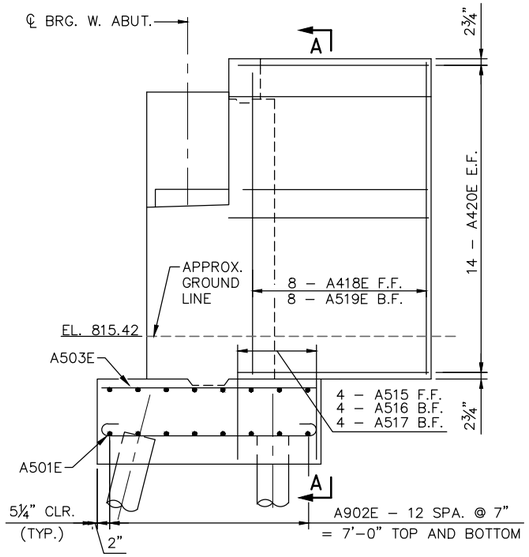

NORTHWEST WINGWALL ELEVATION

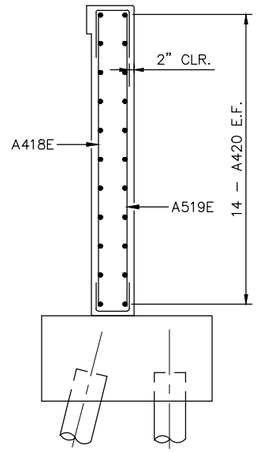

SECTION A–A

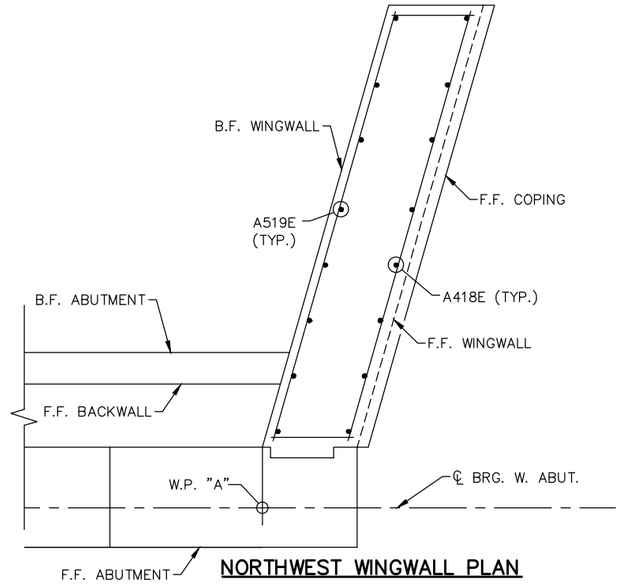

NORTHWEST WINGWALL PLAN

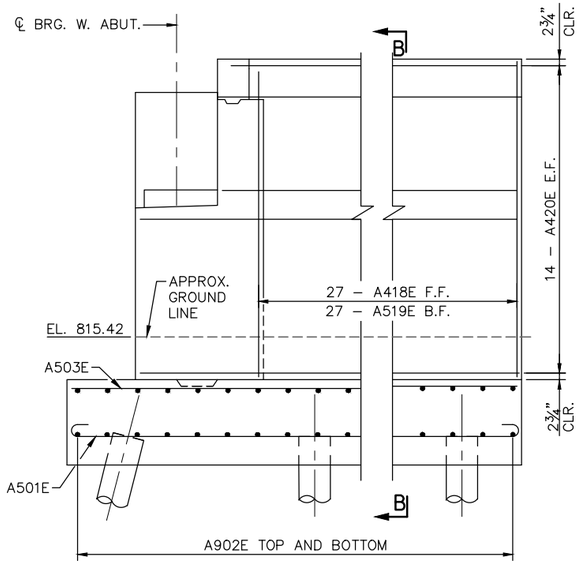

SOUTHWEST WINGWALL ELEVATION

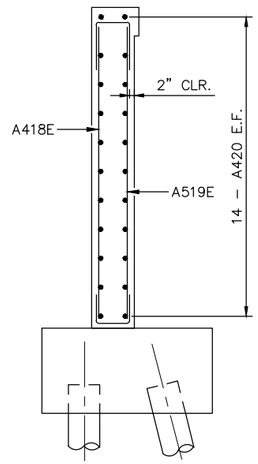

SECTION B–B

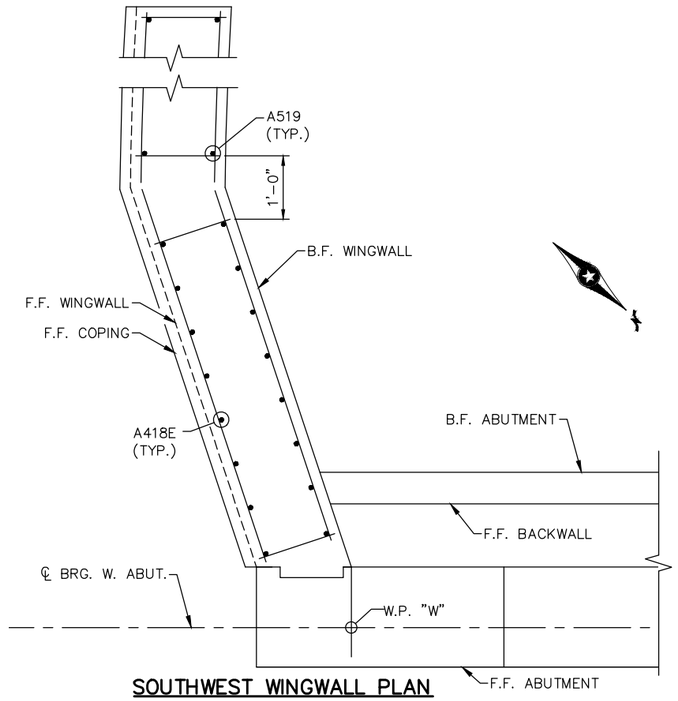

SOUTHWEST WINGWALL PLAN

NO.	DATE	BY	CHECK	DESIGN	REVISION / SUBMITTAL

DESIGNED BY: PDC | CHECKED BY: SAD
DRAWN BY: JIK | CHECKED BY: SAD

AECOM Kimley»Horn

90% SUBMISSION - 1/22/16

METROPOLITAN COUNCIL

SOUTHWEST Green Line LRT Extension

CIVIL- VOLUME 4G
LUCE LINE TRAIL BRIDGE
BRIDGE R0696
WEST ABUTMENT REINFORCEMENT 3

DISCIPLINE: STRUCTURES
SHEET NAME: CBR0696-BRG-ABT-007

SHEET 12 OF 67

Jan. 15 2016 09:41 am V:\3400_ADC\CAD\SEGMENT E4\PLAN SHEETS\STRUCTURES\VNWHT-TRL\CBR0696-BRG-ABT-007.dwg By: Jim.Kimble

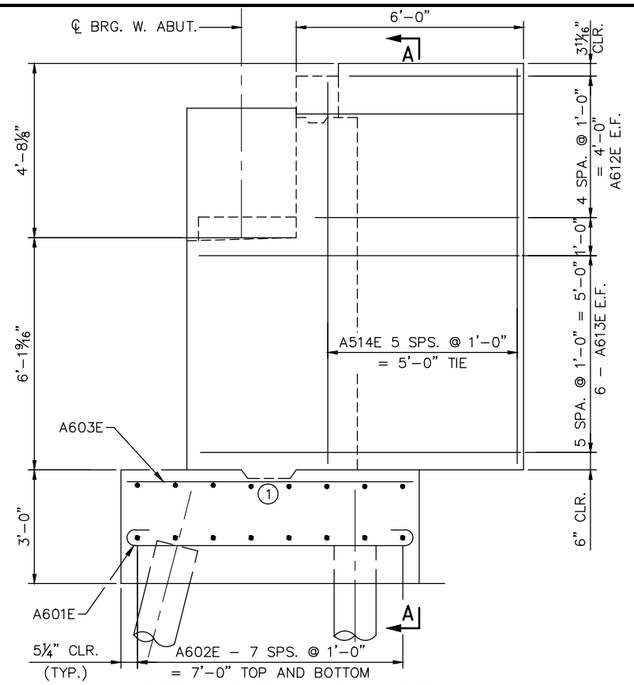

NORTH WINGWALL ELEVATION

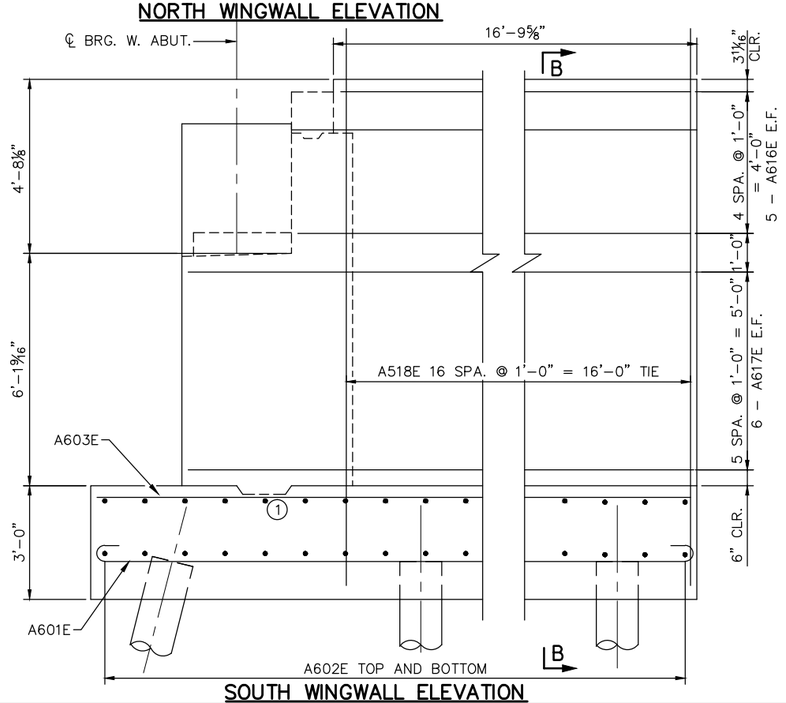

SOUTH WINGWALL ELEVATION

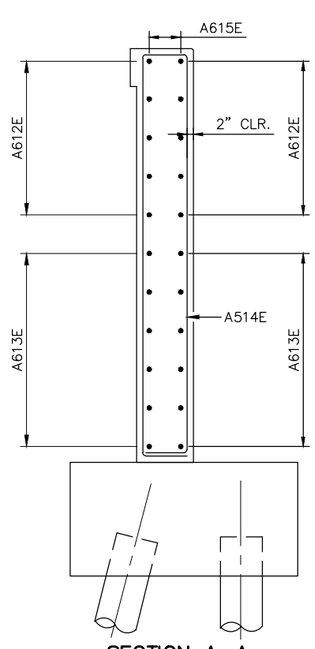

SECTION A–A

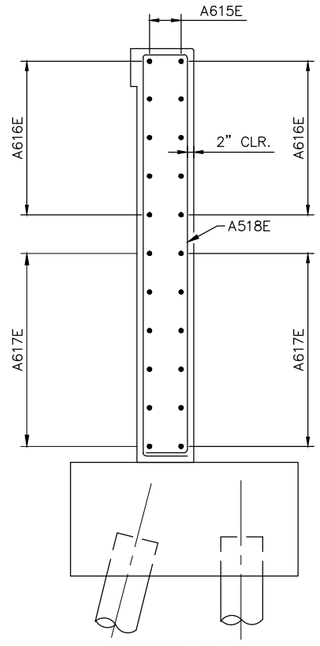

SECTION B–B

NOTES

1. 2" X 12" KEYWAY

NO.	DATE	BY	CHECK	DESIGN	REVISION / SUBMITTAL

DESIGNED BY: PDC CHECKED BY: SAD

DRAWN BY: JIK CHECKED BY: SAD

AECOM Kimley»Horn

90% SUBMISSION - 1/22/16

METROPOLITAN COUNCIL

SOUTHWEST Green Line LRT Extension

CIVIL - VOLUME 4G
LUCE LINE TRAIL BRIDGE
BRIDGE R0696
WEST ABUTMENT REINFORCEMENT 4

DISCIPLINE: STRUCTURES

SHEET NAME: CBR0696-BRG-ABT-008

SHEET 13 OF 67

Jan, 15 2016 09:42 am V:\3400_ADC\CAD\SEGMENT E4\PLAN SHEETS\STRUCTURES\VNWHT-TRL\CBR0696-BRG-ABT-008.dwg By: Jim.Kimble

BILL OF REINFORCEMENT FOR WEST ABUTMENT				
BAR	NO.	LENGTH	SHAPE	LOCATION
A501E	18	8'-6½"	BENT	FOOTING, LONG.
A902E	13	17'-6"	STR.	FOOTING, TRANS.
A503E	18	7'-0"	STR.	FOOTING, LONG.
A604E	14	5'-6"	STR.	FOOTING, F.F. DOWEL
A605E	14	6'-6"	BENT	FOOTING, B.F. DOWEL
A606E	2	17'-6"	STR.	STEM, TRANSVERSE
A607E	16	8'-5"	STR.	STEM, VERTICAL
A508E	18	5'-8"	BENT	STEM, STIRRUP
A509E	18	7'-9"	BENT	BACKWALL, STIRRUP
A510E	18	4'-4"	BENT	PAVING BLOCK STIRRUP

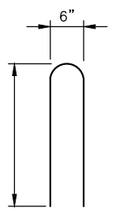

B515E

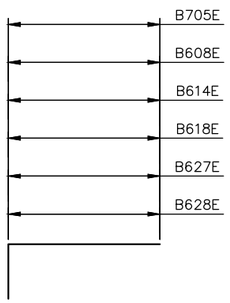

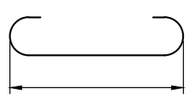

B702

NO.	DATE	BY	CHECK	DESIGN	REVISION / SUBMITTAL

DESIGNED BY: PDC CHECKED BY: SAD
DRAWN BY: JIK CHECKED BY: SAD

AECOM Kimley»Horn

90% SUBMISSION - 01/22/16

METROPOLITAN COUNCIL

SOUTHWEST Green Line LRT Extension

CIVIL - VOLUME 4G
LUCE LINE TRAIL BRIDGE
BRIDGE R0696
WEST ABUTMENT REINFORCEMENT 5

DISCIPLINE: STRUCTURES
SHEET NAME: CBR0696-BRG-ABT-009

SHEET 14 OF 67

Jan, 15 2016 09:42 am v:\3400_ADC\CAD\SEGMENT E4\PLAN SHEETS\STRUCTURES\VNWHT-TRL\CBR0696-BRG-ABT-009.dwg By: Jim.Kimble

EAST ABUTMENT COMPUTED PILE LOAD - TONS/PILE	
FACTORED DEAD LOAD + EARTH PRESSURE	42.7
FACTORED LIVE LOAD	36.1
* FACTORED DESIGN LOAD	78.8

* BASED ON STRENGTH I (FINAL 2) LOAD COMBINATION.

EAST ABUTMENT REQUIRED NOMINAL PILE BEARING RESISTANCE FOR C-I-P PILES Rn - TONS/PILE		
FIELD CONTROL METHOD	φdyn	* Rn
PDA	0.65	122

* Rn = (FACTORED DESIGN LOAD) / φdyn

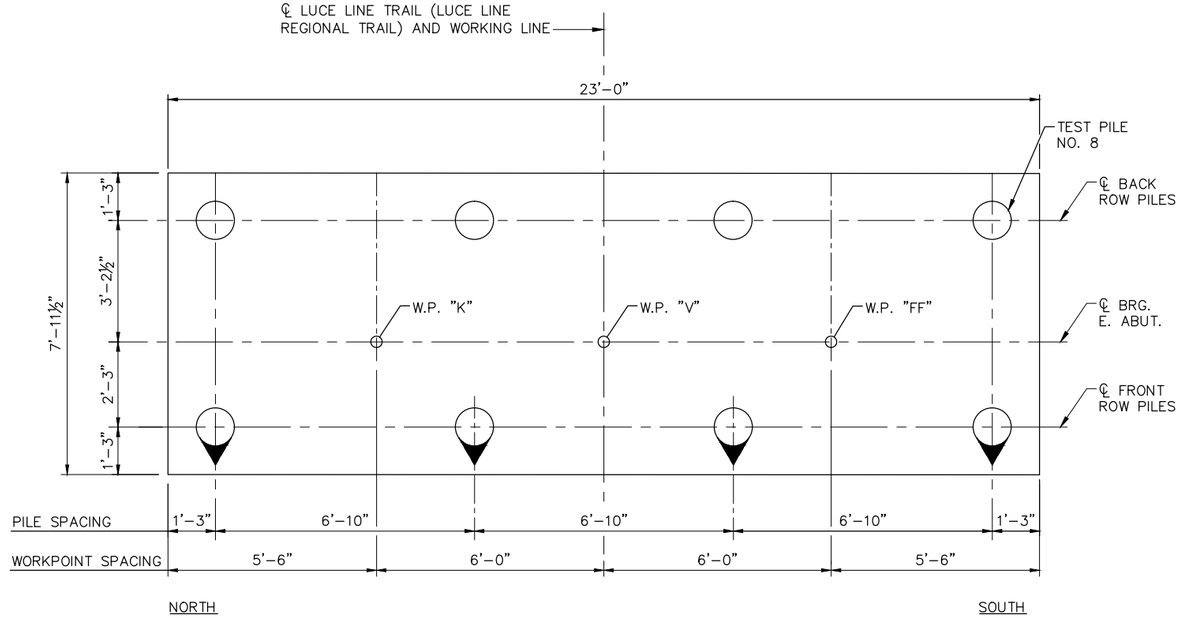

FOOTING PLAN

PILE NOTES

1–12" CAST–IN–PLACE TEST PILE 102 FEET LONG.

7–12" CAST–IN–PLACE PILES ESTIMATED LENGTH 92 FEET.

8–12" CAST–IN–PLACE PILES REQ'D FOR EAST ABUTMENT.

PILES MARKED THUS ♀ TO BE BATTERED 3 INCHES PER FOOT IN DIRECTION SHOWN.

PILES TO HAVE A NOMINAL DIAMETER OF 12" AND MINIMUM WALL THICKNESS OF ¼".

ALL PILES TO BE 12" DIA. CAST–IN–PLACE CONCRETE.

PILE SPACING SHOWN IS AT BOTTOM OF FOOTING.

FOR PILE SPLICE DETAILS, SEE B–DETAIL B201.

NO.	DATE	BY	CHECK	DESIGN	REVISION / SUBMITTAL

DESIGNED BY: PDC | CHECKED BY: SAD
DRAWN BY: JJD | CHECKED BY: SAD

AECOM Kimley»Horn

90% SUBMISSION - 1/22/16

METROPOLITAN COUNCIL

SOUTHWEST Green Line LRT Extension

CIVIL - VOLUME 4G
LUCE LINE TRAIL BRIDGE
BRIDGE R0696
EAST ABUTMENT DETAILS 1

DISCIPLINE: STRUCTURES
SHEET NAME: CBR0696-BRG-ABT-010

SHEET 15 OF 67

Jan, 15 2016 09:42 am v:\3400_ADC\CAD\SEGMENT E4\PLAN SHEETS\STRUCTURES\WWHT-TRL\CBR0696-BRG-ABT-010.dwg By: Jim.Kimble

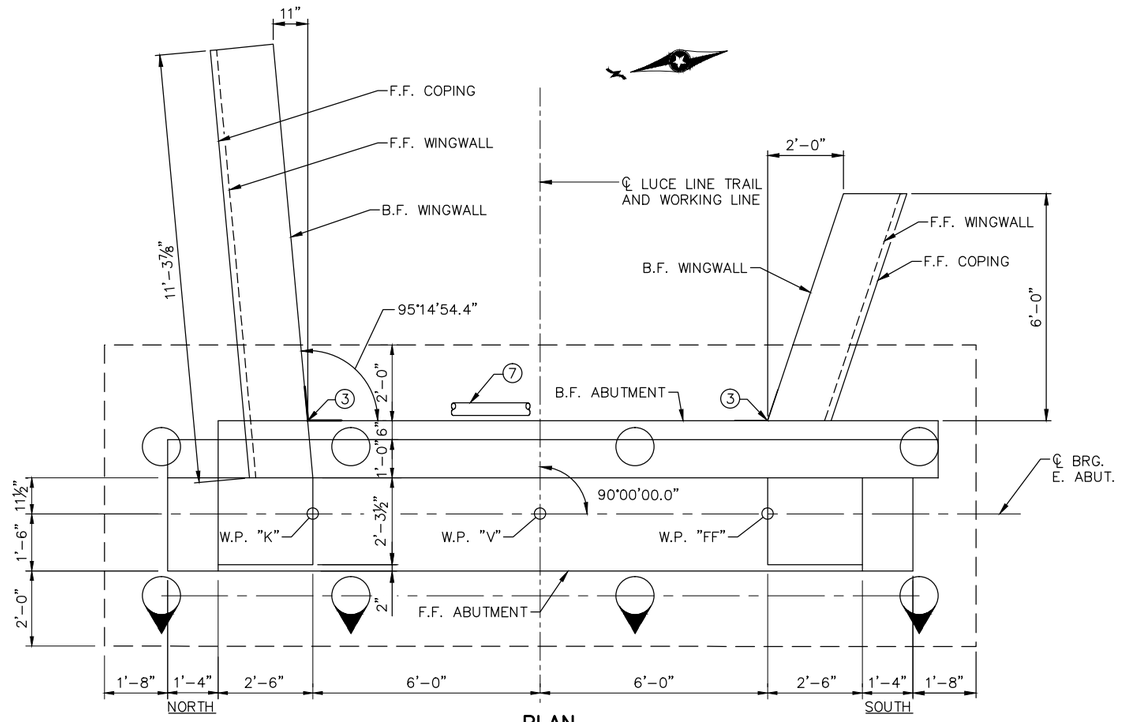

PLAN

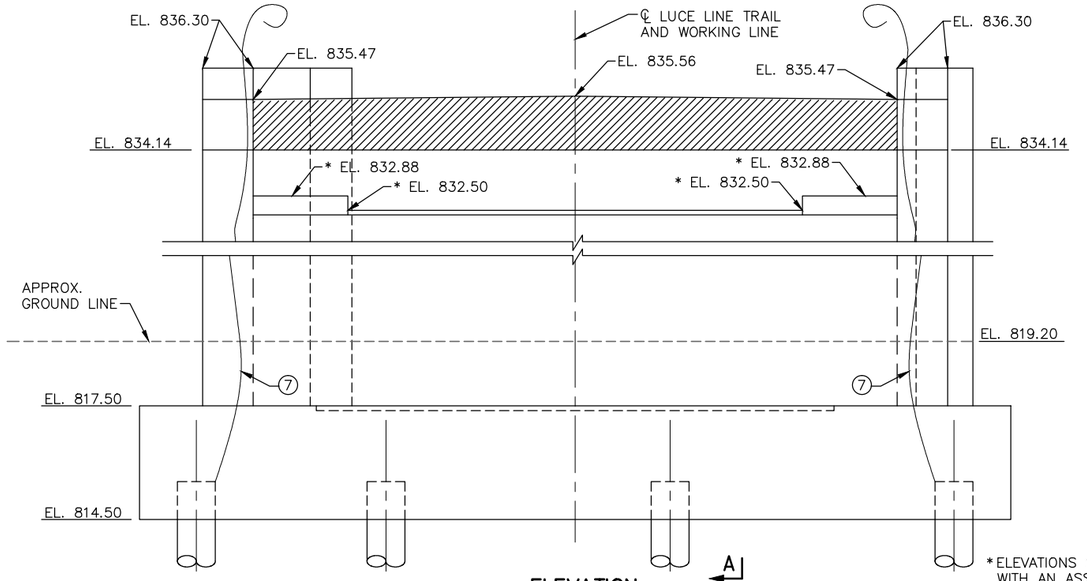

ELEVATION

*ELEVATIONS SHOWN WERE CALCULATED WITH AN ASSUMED BEARING HEIGHT. COORDINATE WITH TRUSS MANUFACTURER.

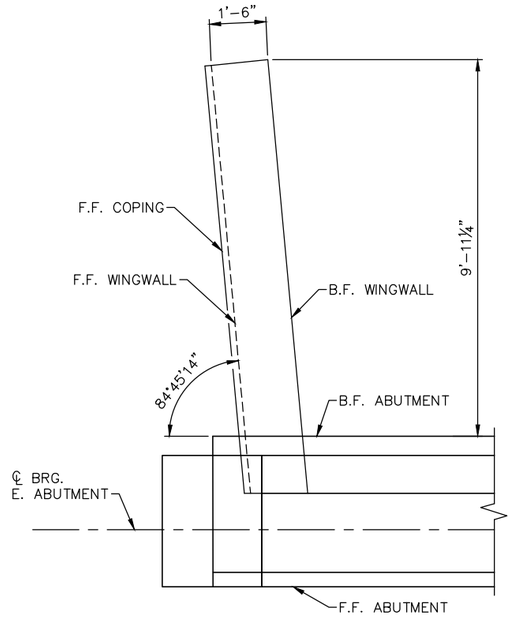

NORTHEAST WINGWALL PLAN

NOTES

1. 4" DIAMETER PERFORATED DRAIN PIPE. SEE DETAIL B910.
2. SIDES OF SHEAR KEY TO BE VERTICAL AND TOP OF SHEAR KEY TO BE LEVEL IN BOTH DIRECTIONS.
3. MEMBRANE WATERPROOFING SYSTEM PER SPEC. 2481.3.B.
4. BRIDGE SLAB CONCRETE 3Y42.
5. STRUCTURAL CONCRETE 3B52.
6. STRUCTURAL CONCRETE 1G52.
7. ATTACH WIRE FENCE ANCHORAGE TO PILE WITH SOLID NO. 6 GAGE COPPER WIRE WITH AN APPROVED TYPE CLAMP OR BRAZING, (ONE ANCHORAGE PER END OF RAIL.)

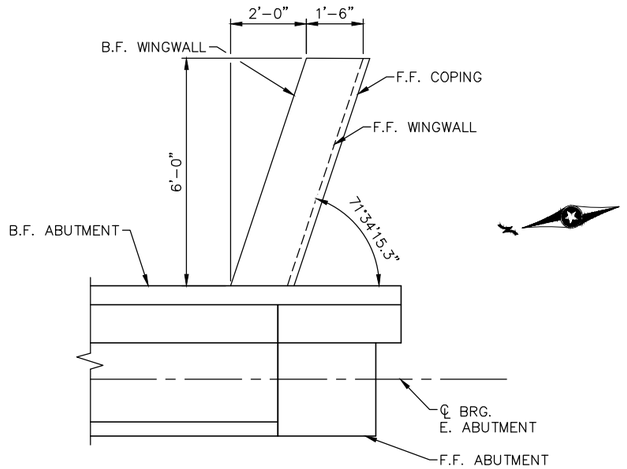

SOUTHEAST WINGWALL PLAN

NO.	DATE	BY	CHECK	DESIGN	REVISION / SUBMITTAL

DESIGNED BY: PDC CHECKED BY: SAD
DRAWN BY: JIK CHECKED BY: SAD

AECOM Kimley»Horn

90% SUBMISSION - 1/22/16

METROPOLITAN COUNCIL

SOUTHWEST Green Line LRT Extension

CIVIL - VOLUME 4G
LUCE LINE TRAIL BRIDGE
BRIDGE R0696
EAST ABUTMENT DETAILS 2

DISCIPLINE: STRUCTURES
SHEET NAME: CBR0696-BRG-ABT-011

SHEET 16 OF 67

Jan, 15 2016 09:43 am V:\3400_ADC\CAD\SEGMENT E4\PLAN SHEETS\STRUCTURES\VNWHT-TRL\CBR0696-BRG-ABT-011.dwg By: Jim.Kimble

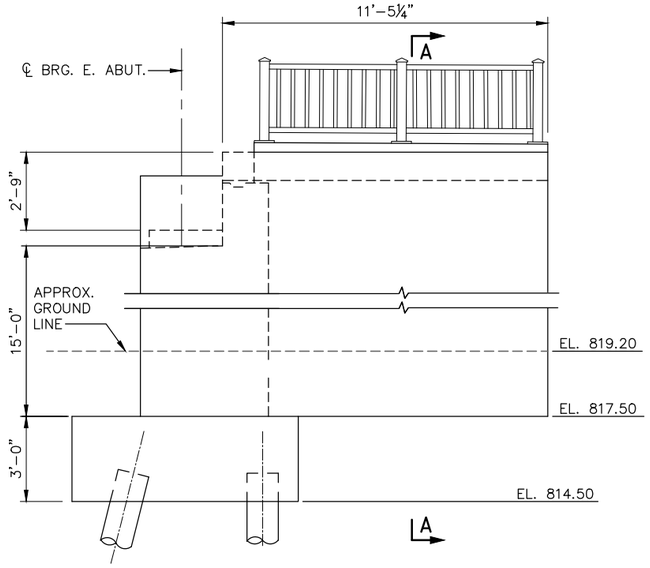

NORTHEAST WINGWALL ELEVATION

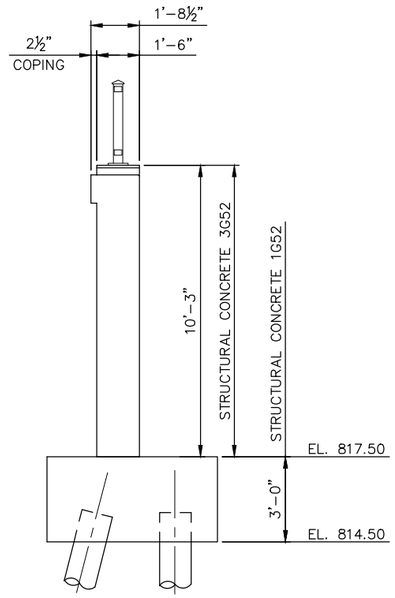

SECTION A-A

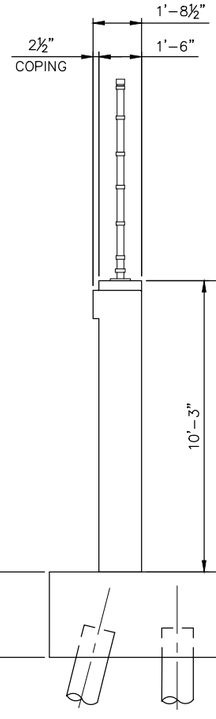

SECTION B-B

NOTES

1. 4" DIAMETER PERFORATED DRAIN PIPE. SEE DETAIL B910.
2. SIDES OF SHEAR KEY TO BE VERTICAL AND TOP OF SHEAR KEY TO BE LEVEL IN BOTH DIRECTIONS.
3. MEMBRANE WATERPROOFING SYSTEM PER SPEC. 2481.3.B.
4. BRIDGE SLAB CONCRETE 3Y42.
5. STRUCTURAL CONCRETE 3B52.
6. STRUCTURAL CONCRETE 1G52.
7. ATTACH WIRE FENCE ANCHORAGE TO PILE WITH SOLID NO. 6 GAGE COPPER WIRE WITH AN APPROVED TYPE CLAMP OR BRAZING, (ONE ANCHORAGE PER END OF RAIL.)

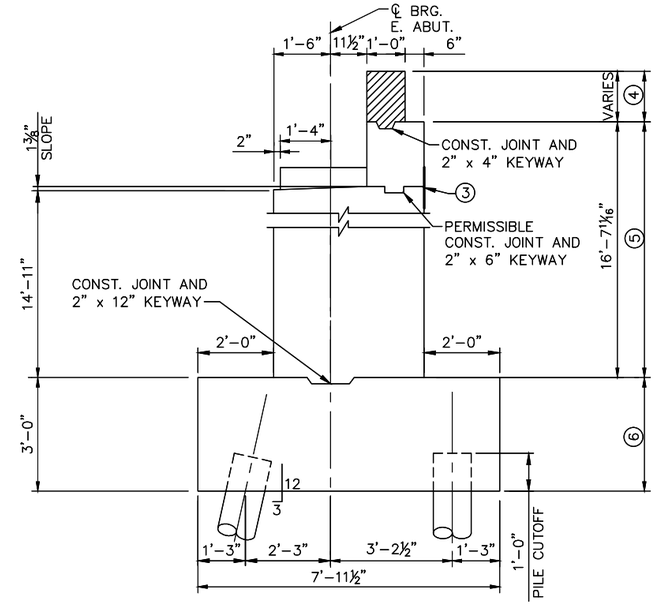

SECTION A-A

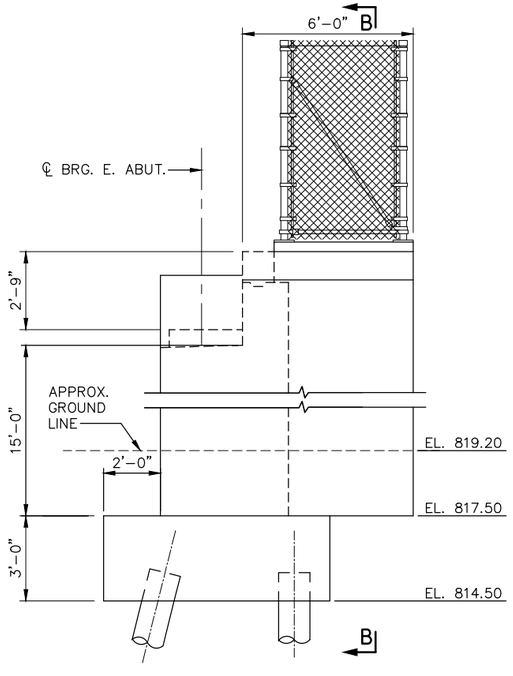

SOUTHEAST WINGWALL ELEVATION

NO.	DATE	BY	CHECK	DESIGN	REVISION / SUBMITTAL

DESIGNED BY: PDC CHECKED BY: SAD
DRAWN BY: JIK CHECKED BY: SAD

AECOM Kimley»Horn

90% SUBMISSION - 01/22/16

METROPOLITAN COUNCIL

SOUTHWEST Green Line LRT Extension

CIVIL - VOLUME 4G
LUCE LINE TRAIL BRIDGE
BRIDGE R0696
EAST ABUTMENT DETAILS 3

DISCIPLINE: STRUCTURES
SHEET NAME: CBR0696-BRG-ABT-012

SHEET 17 OF 67

Jan, 15 2016 09:43 am v:\3400_ADC\CAD\SEGMENT E4\PLAN SHEETS\STRUCTURES\VNWHT-TRL\CBR0696-BRG-ABT-012.dwg By: Jim.Kimble

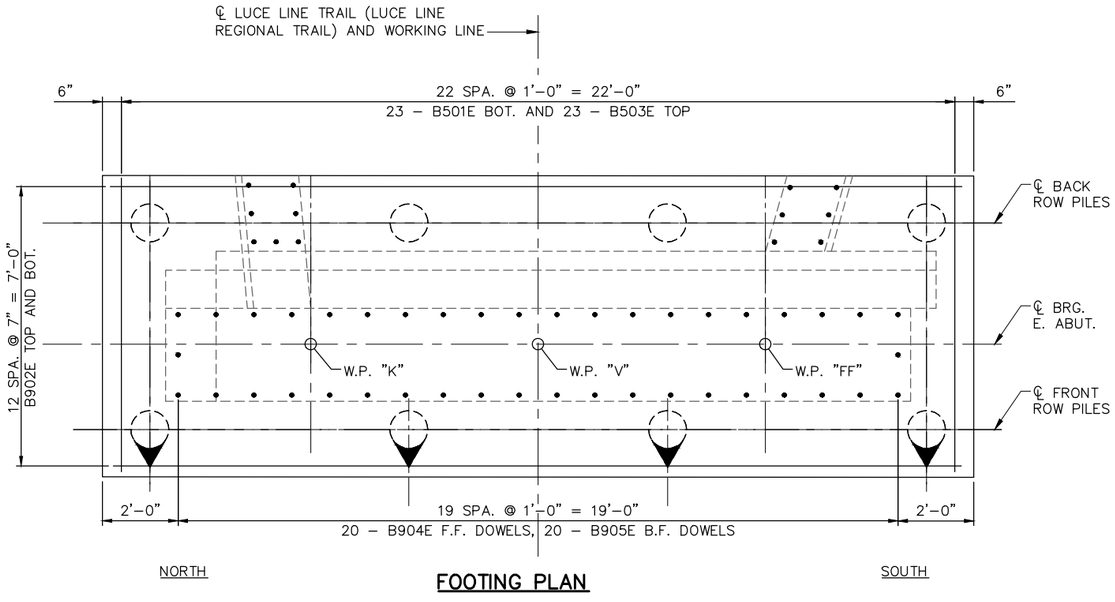

FOOTING PLAN

NO.	DATE	BY	CHECK	DESIGN	REVISION / SUBMITTAL

DESIGNED BY: PDC | CHECKED BY: SAD
DRAWN BY: JIK | CHECKED BY: SAD

AECOM Kimley»Horn

90% SUBMISSION - 1/22/16

METROPOLITAN COUNCIL

SOUTHWEST Green Line LRT Extension

CIVIL - VOLUME 4G
LUCE LINE TRAIL BRIDGE
BRIDGE R0696
EAST ABUTMENT REINFORCEMENT 1

DISCIPLINE: STRUCTURES
SHEET NAME: CBR0696-BRG-ABT-013

SHEET 18 OF 67

Jan, 15 2016 09:44 am V:\3400_ADC\CAD\SEGMENT E4\PLAN SHEETS\STRUCTURES\WNWHT-TRL\CBR0696-BRG-ABT-013.dwg By: Jim.Kimble

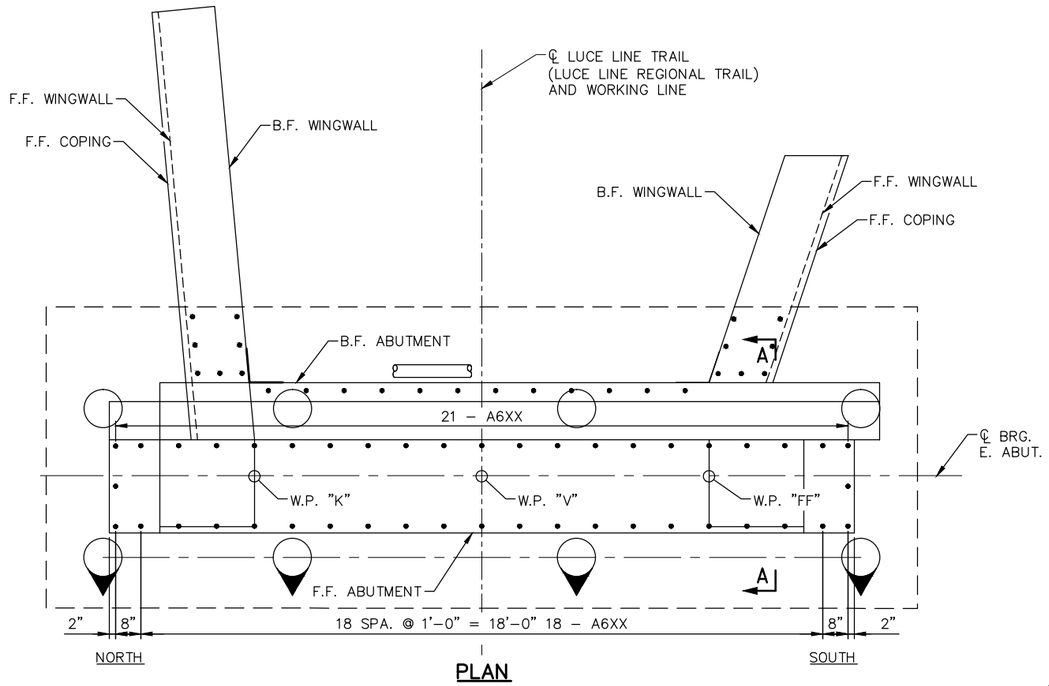

PLAN

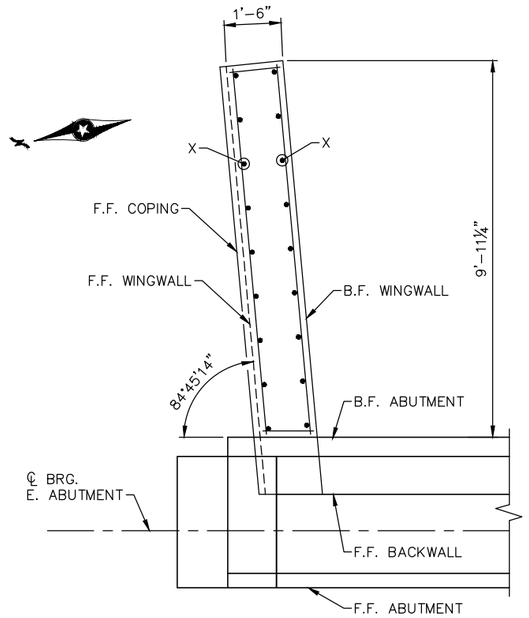

NORTH WINGWALL PLAN

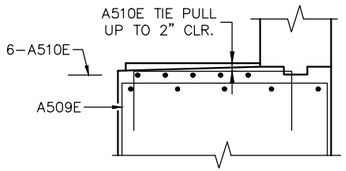

SECTION A–A

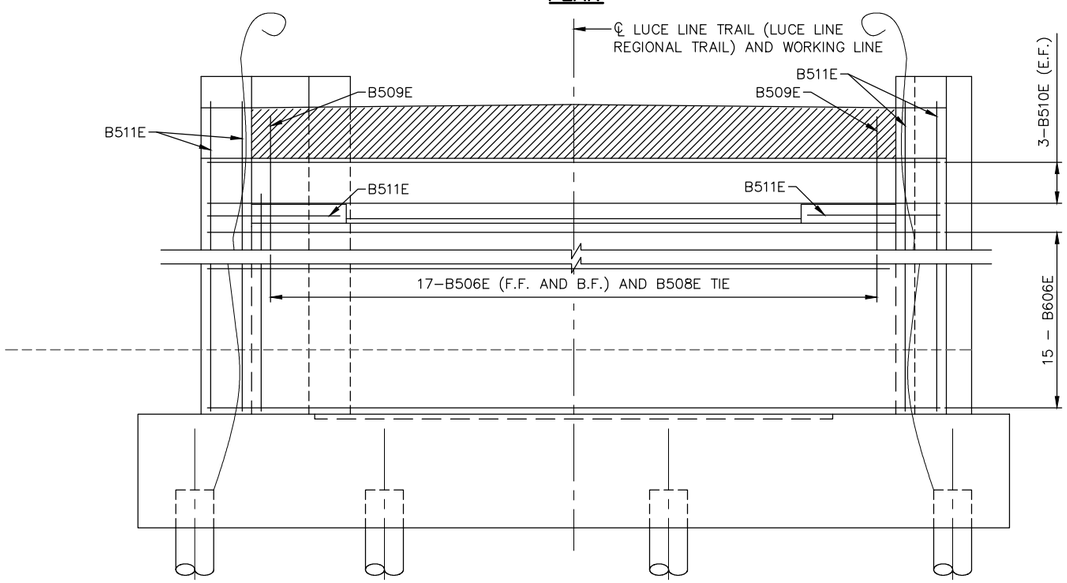

ELEVATION

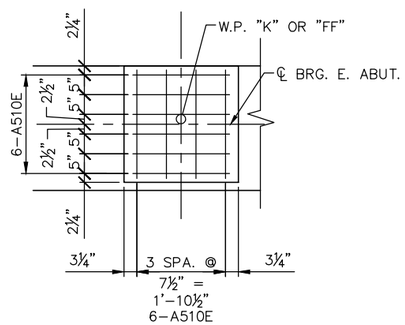

TYPICAL PEDESTAL PLAN

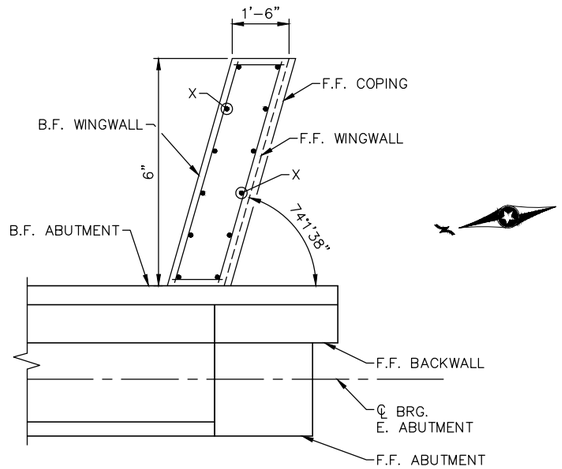

SOUTH WINGWALL PLAN

NO.	DATE	BY	CHECK	DESIGN	REVISION / SUBMITTAL

DESIGNED BY: PDC CHECKED BY: SAD
DRAWN BY: JIK CHECKED BY: SAD

AECOM Kimley»Horn

90% SUBMISSION - 1/22/16

METROPOLITAN COUNCIL

SOUTHWEST Green Line LRT Extension

CIVIL - VOLUME 4G
LUCE LINE TRAIL BRIDGE
BRIDGE R0696
EAST ABUTMENT REINFORCEMENT 2

DISCIPLINE: STRUCTURES
SHEET NAME: CBR0696-BRG-ABT-014

SHEET 19 OF 67

Jan. 15 2016 09:44 am v:\3400_ADC\CAD\SEGMENT E4\PLAN SHEETS\STRUCTURES\VNWHT-TRL\CBR0696-BRG-ABT-014.dwg By: Jim.Kimble

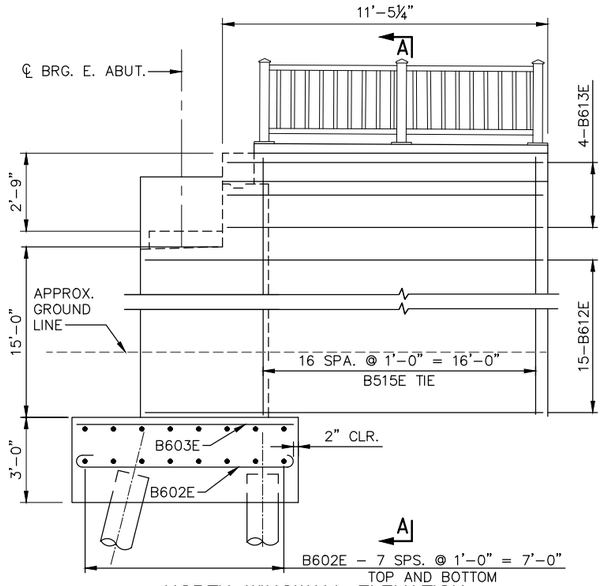

NORTH WINGWALL ELEVATION

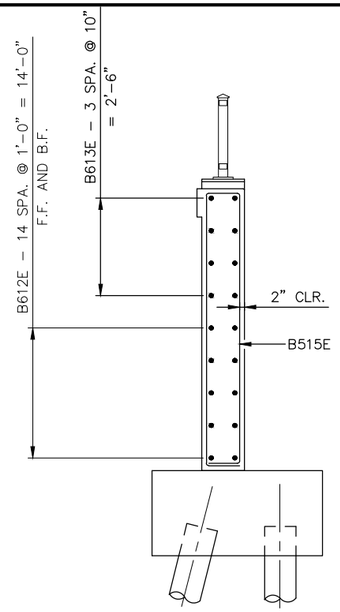

SECTION A-A

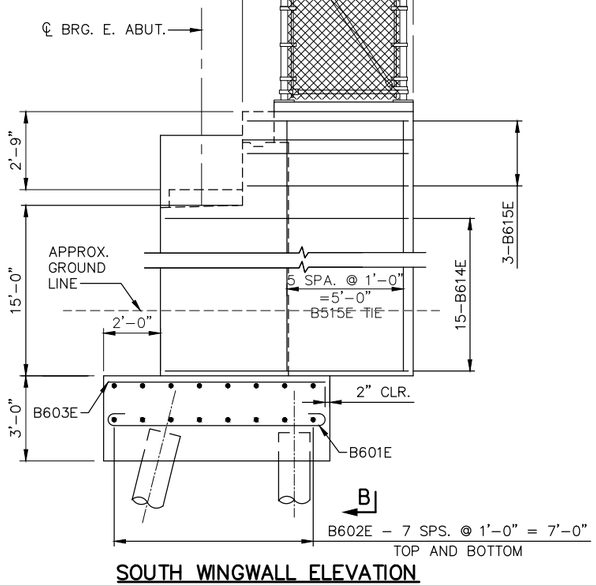

SOUTH WINGWALL ELEVATION

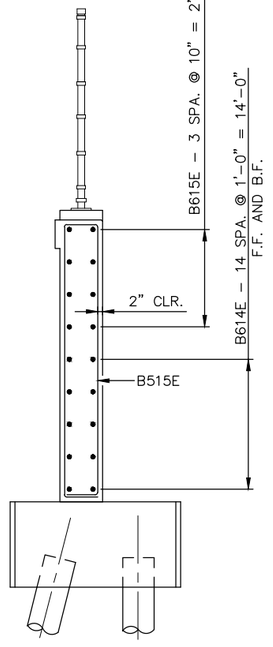

SECTION B-B

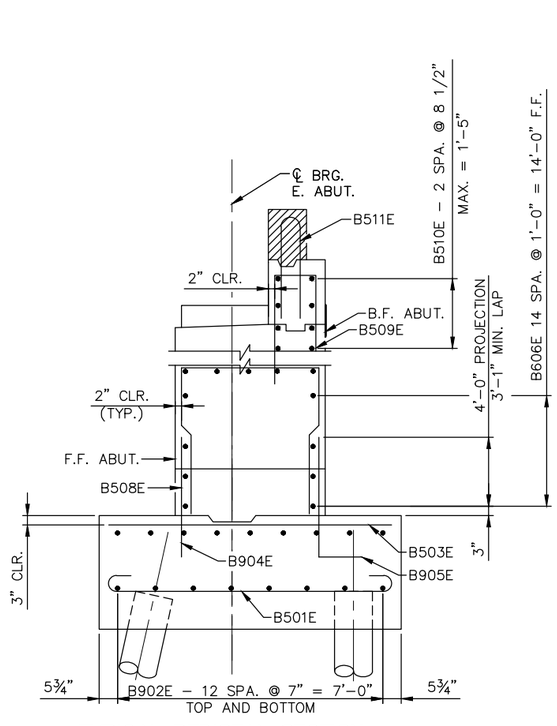

TYPICAL PEDISTAL SECTION

NO.	DATE	BY	CHECK	DESIGN	REVISION / SUBMITTAL

DESIGNED BY: PDC | CHECKED BY: SAD
DRAWN BY: JIK | CHECKED BY: SAD

AECOM Kimley»Horn

90% SUBMISSION - 01/22/16

METROPOLITAN COUNCIL

SOUTHWEST Green Line LRT Extension

CIVIL - VOLUME 4G
LUCE LINE TRAIL BRIDGE
BRIDGE R0696
EAST ABUTMENT REINFORCEMENT 3

DISCIPLINE: STRUCTURES
SHEET NAME: CBR0696-BRG-ABT-015

SHEET 20 OF 67

Jan, 15 2016 09:45 am V:\3400_ADC\CAD\SEGMENT E4\PLAN SHEETS\STRUCTURES\VNWHT-TRL\CBR0696-BRG-ABT-015.dwg By: Jim.Kimble

BILL OF REINFORCEMENT FOR EAST ABUTMENT				
BAR	NO.	LENGTH	SHAPE	LOCATION
B501E	23	8'-6½"	BENT	FOOTING, LONG.
B902E	13	22'-8"	STR.	FOOTING, TRANS.
B503E	23	7'-0"	STR.	FOOTING, LONG.
B904E	19	5'-6"	STR.	FOOTING, F.F. DOWEL
B905E	19	6'-9"	BENT	FOOTING, B.F. DOWEL
B506E	34	16'-6"	STR.	STEM, TRANSVERSE
B507E	6	16'-6"	STR.	BACKWALL, LONGITUDINAL
B508E	16	12'-8"	BENT	STEM, STIRRUP
B509E	16	7'-9"	BENT	BACKWALL, STIRRUP
B510E	16	4'-4"	BENT	PAVING BLOCK STIRRUP

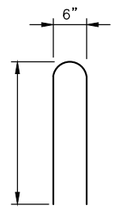

B515E

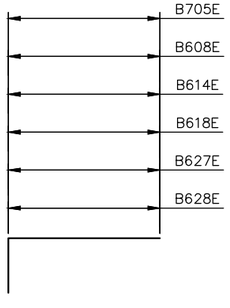

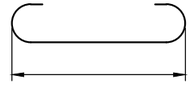

B702

NO.	DATE	BY	CHECK	DESIGN	REVISION / SUBMITTAL

DESIGNED BY: PDC | CHECKED BY: SAD
DRAWN BY: JIK | CHECKED BY: SAD

AECOM Kimley»Horn

90% SUBMISSION - 01/22/16

METROPOLITAN COUNCIL

SOUTHWEST Green Line LRT Extension

CIVIL - VOLUME 4G
LUCE LINE TRAIL BRIDGE
BRIDGE R0696
EAST ABUTMENT REINFORCEMENT 4

DISCIPLINE: STRUCTURES

SHEET NAME: CBR0696-BRG-ABT-016

SHEET 21 OF 67

Jan, 15 2016 09:45 am V:\3400_ADC\CAD\SEGMENT E4\PLAN SHEETS\STRUCTURES\WNWHT-TRL\CBR0696-BRG-ABT-016.dwg By: Jim.Kimble

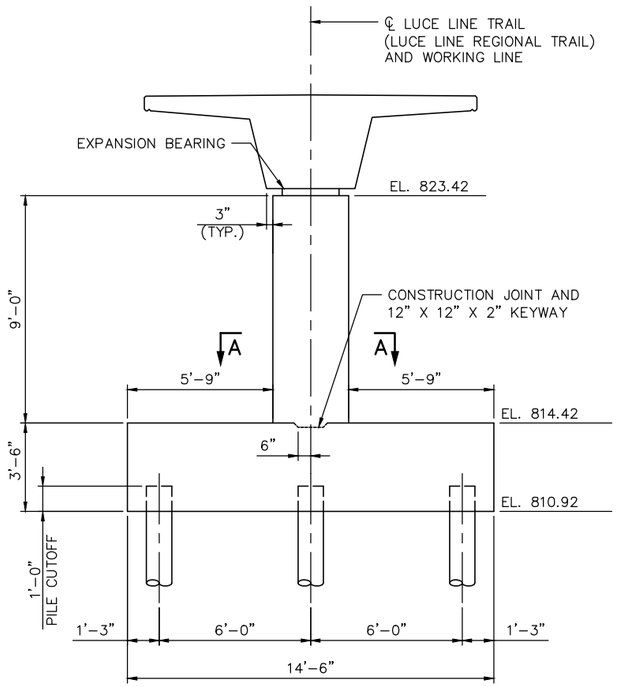

ELEVATION

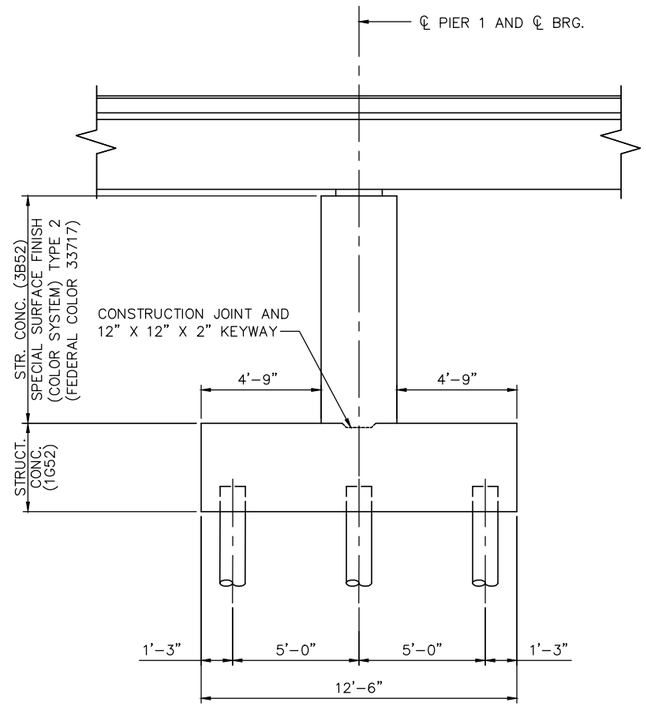

END VIEW

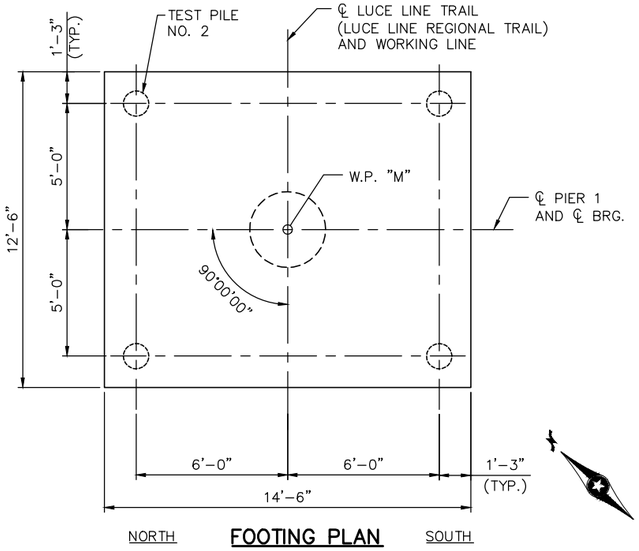

FOOTING PLAN

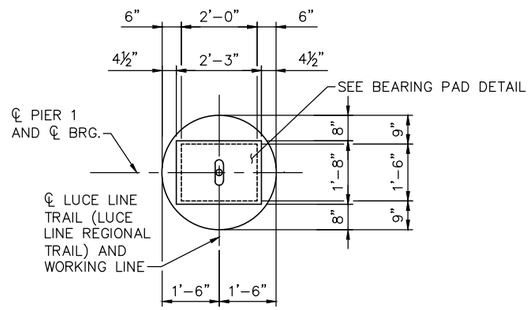

EXPANSION BEARING PLAN VIEW

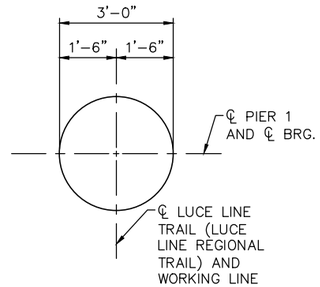

SECTION A–A

PIER 1 COMPUTED PILE LOAD - TONS/PILE	
FACTORED DEAD LOAD + EARTH PRESSURE	67.4
FACTORED LIVE LOAD	17.6
* FACTORED DESIGN LOAD	85.0

* BASED ON STRENGTH V LOAD COMBINATION.

PIER 1 REQUIRED NOMINAL PILE BEARING RESISTANCE FOR C-I-P PILES Rn - TONS/PILE		
FIELD CONTROL METHOD	φdyn	* Rn
PDA	0.65	130.8

* Rn = (FACTORED DESIGN LOAD) / φdyn

PIER 1 PILE NOTES:

1 – 12" CAST–IN–PLACE TEST PILE, 106 FEET LONG.

4 – 12" CAST–IN–PLACE PILES, ESTIMATED LENGTH 96 FEET LONG.

5 – 12" CAST–IN–PLACE PILES REQUIRED AT PIER 1.

ALL PILES TO BE 12" DIA. CAST–IN–PLACE CONCRETE.

PILE SPACING SHOWN IS AT BOTTOM OF FOOTING.

PILES TO HAVE A NOMINAL DIAMETER OF 12" AND A MINIMUM WALL THICKNESS OF ¼".

FOR PILE SPLICE DETAILS, SEE B–DETAIL B201.

NO.	DATE	BY	CHECK	DESIGN	REVISION / SUBMITTAL

DESIGNED BY: PDC CHECKED BY: SAD
DRAWN BY: JIK CHECKED BY: SAD

AECOM Kimley»Horn

90% SUBMISSION - 1/22/16

METROPOLITAN COUNCIL

SOUTHWEST Green Line LRT Extension

CIVIL - VOLUME 4G
LUCE LINE TRAIL BRIDGE
BRIDGE R0696
PIER 1 DETAILS

DISCIPLINE: STRUCTURES
SHEET NAME: CBR0696-BRG-PIR-001

SHEET 22 OF 67

Jan, 15 2016 09:45 am V:\3400_ADC\CAD\SEGMENT E4\PLAN SHEETS\STRUCTURES\VNWHT-TRL\CBR0696-BRG-PIR-001.dwg By: Jim.Kimble

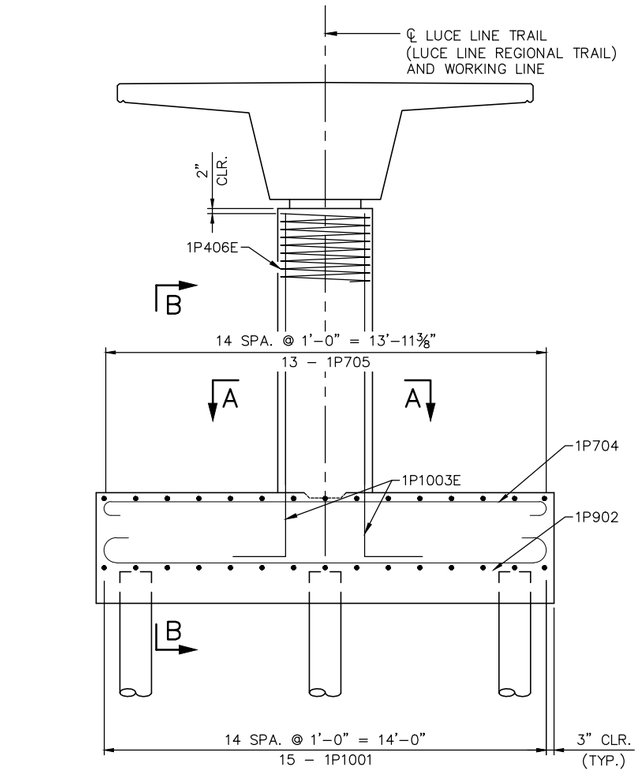

ELEVATION

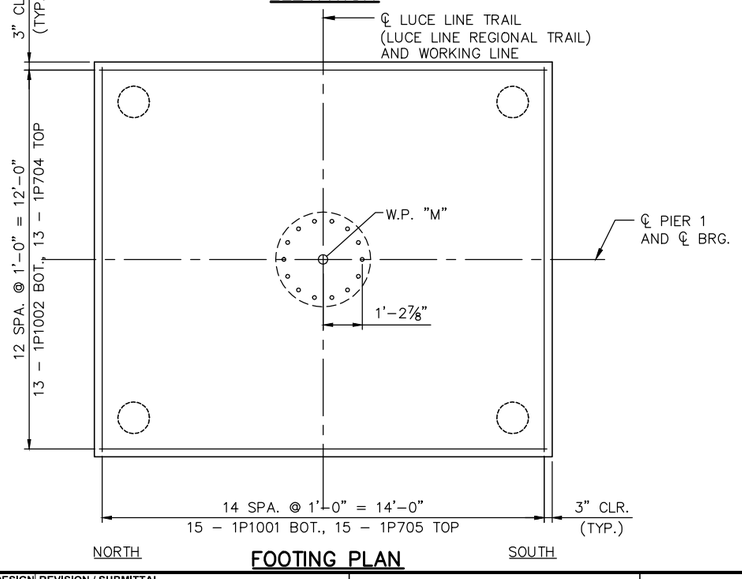

FOOTING PLAN

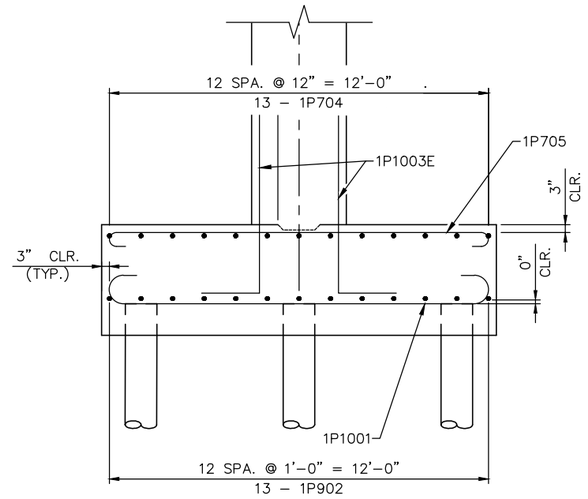

SECTION B–B

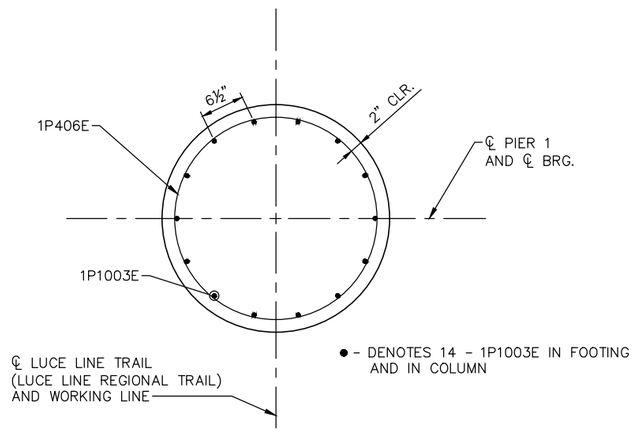

SECTION A–A

NO.	DATE	BY	CHECK	DESIGN	REVISION / SUBMITTAL

DESIGNED BY: PDC CHECKED BY: SAD
DRAWN BY: JIK CHECKED BY: SAD

AECOM Kimley»Horn

90% SUBMISSION - 1/22/16

METROPOLITAN COUNCIL

SOUTHWEST Green Line LRT Extension

CIVIL - VOLUME 4G
LUCE LINE TRAIL BRIDGE
BRIDGE R0696
PIER 1 REINFORCEMENT

DISCIPLINE: STRUCTURES

SHEET NAME: CBR0696-BRG-PIR-002

SHEET 23 OF 67

Jan, 15 2016 09:46 am V:\3400_ADC\CAD\SEGMENT E4\PLAN SHEETS\STRUCTURES\VNWHT-TRL\CBR0696-BRG-PIR-002.dwg By: Jim.Kimble

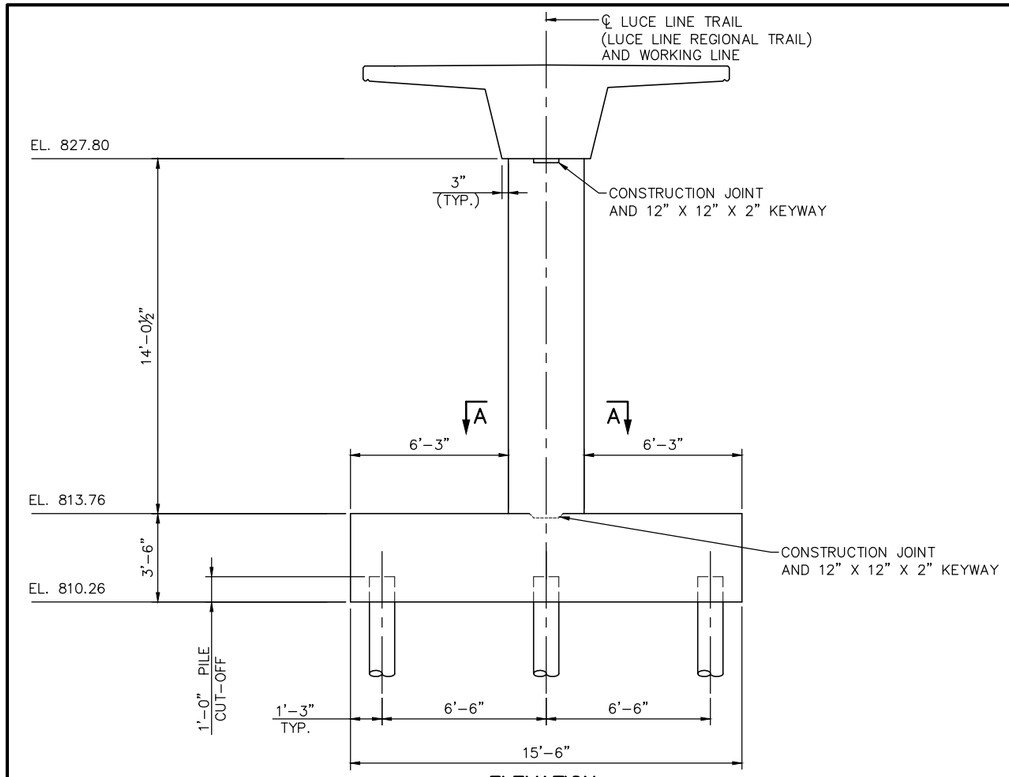

ELEVATION

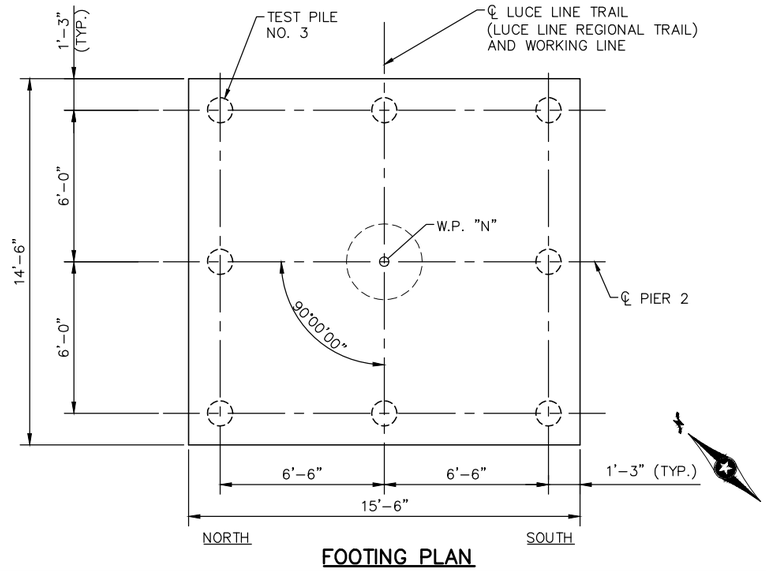

FOOTING PLAN

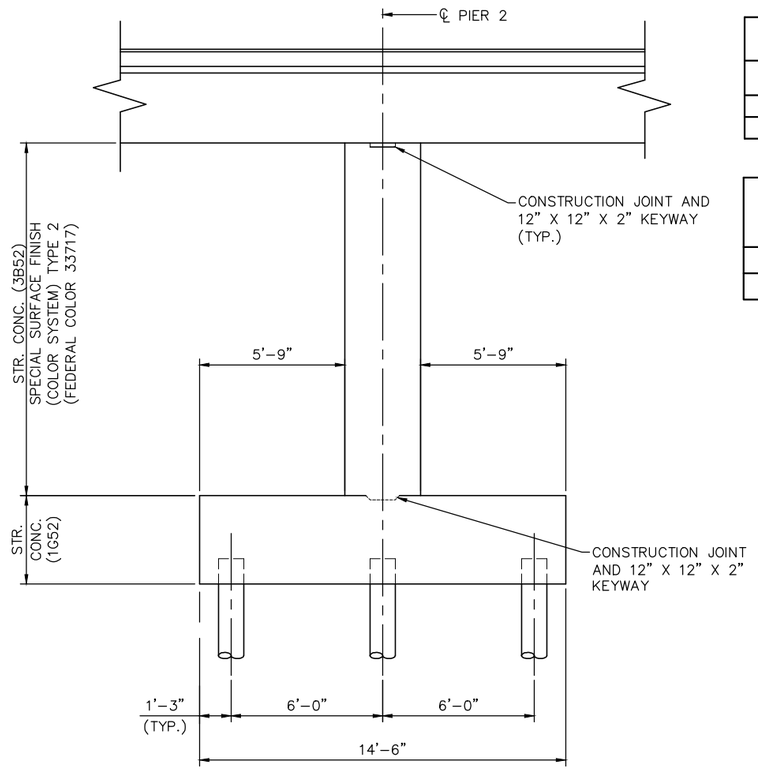

END VIEW

PIER 2 COMPUTED PILE LOAD - TONS/PILE	
FACTORED DEAD LOAD + EARTH PRESSURE	51.2
FACTORED LIVE LOAD	18.4
* FACTORED DESIGN LOAD	69.5

* BASED ON STRENGTH I LOAD COMBINATION.

PIER 2 REQUIRED NOMINAL PILE BEARING RESISTANCE FOR C-I-P PILES Rn - TONS/PILE		
FIELD CONTROL METHOD	φdyn	* Rn
PDA	0.65	106.9

* Rn = (FACTORED DESIGN LOAD) / φdyn

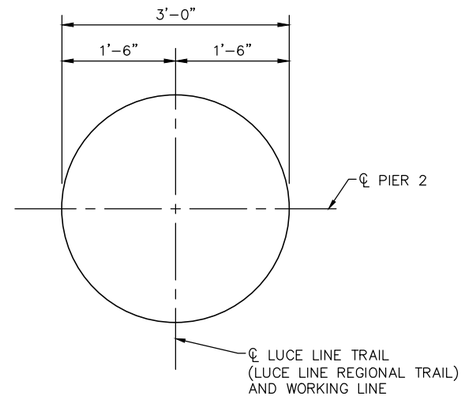

SECTION A–A

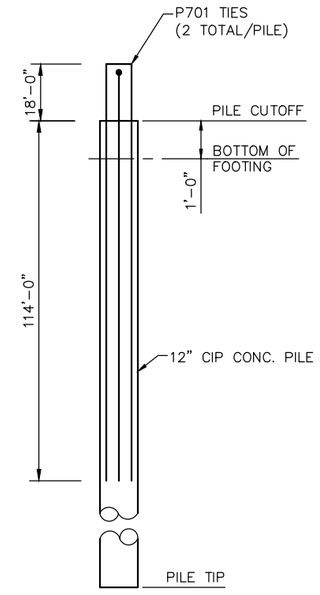

PILE ANCHORAGE DETAIL

PIER 2 PILE NOTES:

1 - 12" CAST-IN-PLACE TEST PILE, 102 FEET LONG.

7 - 12" CAST-IN-PLACE PILES, ESTIMATED LENGTH 92 FEET LONG.

8 - 12" CAST-IN-PLACE PILES REQUIRED AT PIER 2.

ALL PILES TO BE 12" DIA. CAST-IN-PLACE CONCRETE PILES.

PILE SPACING SHOWN IS AT BOTTOM OF FOOTING.

PILES TO HAVE A NOMINAL DIAMETER OF 12" AND A MINIMUM WALL THICKNESS OF ¼".

FOR PILE SPLICE DETAILS, SEE B–DETAIL B201.

NO.	DATE	BY	CHECK	DESIGN	REVISION / SUBMITTAL

DESIGNED BY: PDC | CHECKED BY: SAD
DRAWN BY: JIK | CHECKED BY: SAD

AECOM Kimley»Horn

90% SUBMISSION - 1/22/16

METROPOLITAN COUNCIL

SOUTHWEST Green Line LRT Extension

CIVIL - VOLUME 4G
LUCE LINE TRAIL BRIDGE
BRIDGE R0696
PIER 2 DETAILS

DISCIPLINE: STRUCTURES

SHEET NAME: CBR0696-BRG-PIR-003

SHEET 24 OF 67

Jan, 15 2016 09:46 am V:\3400_ADC\CAD\SEGMENT E4\PLAN SHEETS\STRUCTURES\WWHT-TRL\CBR0696-BRG-PIR-003.dwg By: Jim.Kimble

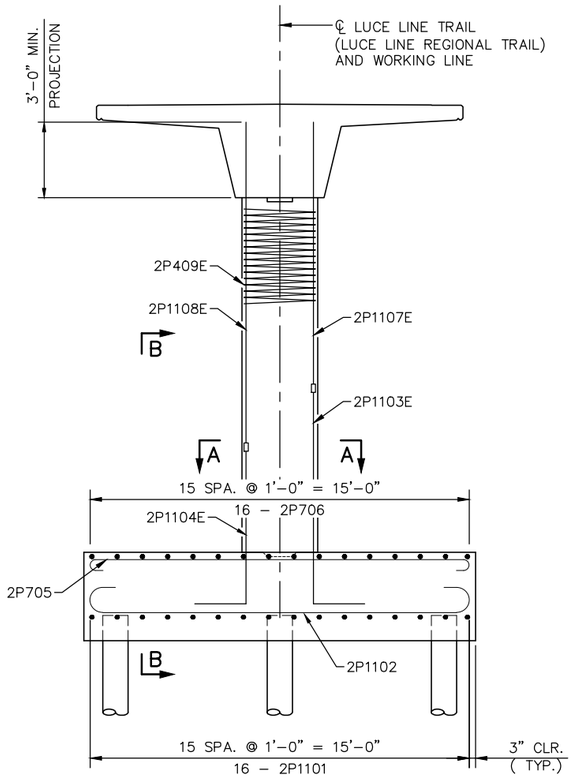

ELEVATION

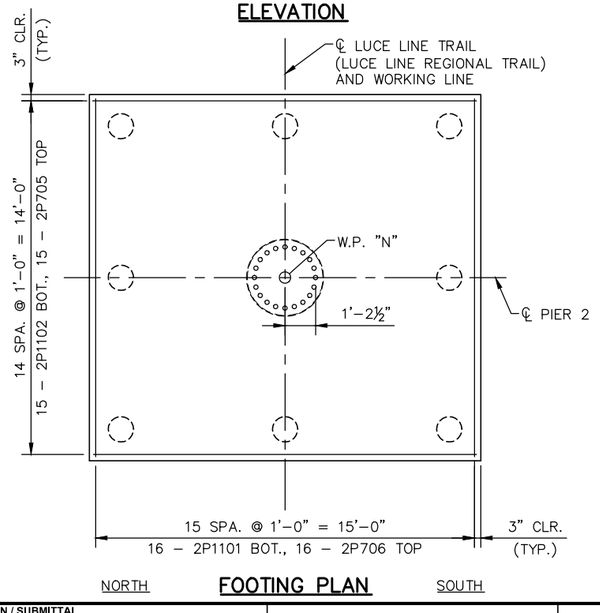

NORTH FOOTING PLAN SOUTH

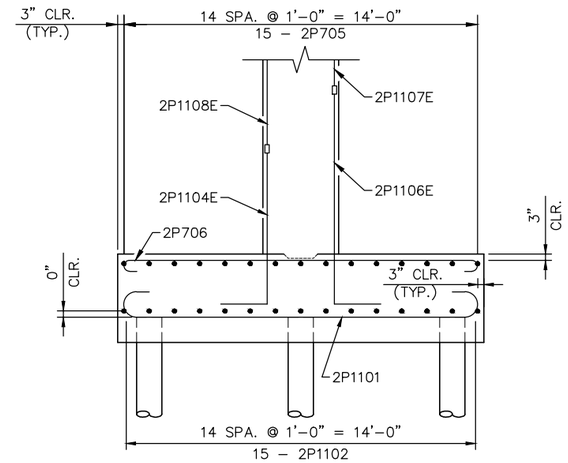

SECTION B-B

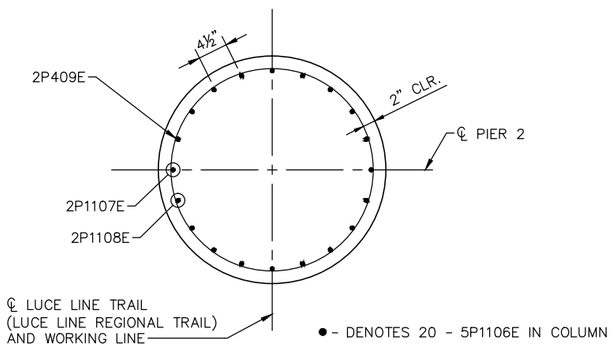

SECTION A-A

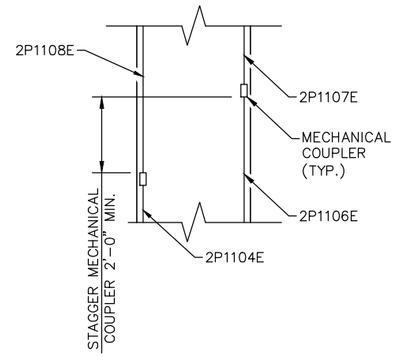

MECHANICAL SPLICE DETAIL

NOTES:

MECHANICAL COUPLER....

NO.	DATE	BY	CHECK	DESIGN	REVISION / SUBMITTAL

DESIGNED BY: PDC CHECKED BY: SAD
DRAWN BY: JIK CHECKED BY: SAD

AECOM Kimley»Horn

90% SUBMISSION - 1/22/16

METROPOLITAN COUNCIL

SOUTHWEST Green Line LRT Extension

CIVIL - VOLUME 4G
LUCE LINE TRAIL BRIDGE
BRIDGE R0696
PIER 2 REINFORCEMENT

DISCIPLINE: STRUCTURES
SHEET NAME: CBR0696-BRG-PIR-004

SHEET 25 OF 67

Jan, 15 2016 09:46 am V:\3400_ADC\CAD\SEGMENT E4\PLAN SHEETS\STRUCTURES\WNWHT-TRL\CBR0696-BRG-PIR-004.dwg By: Jim.Kimble

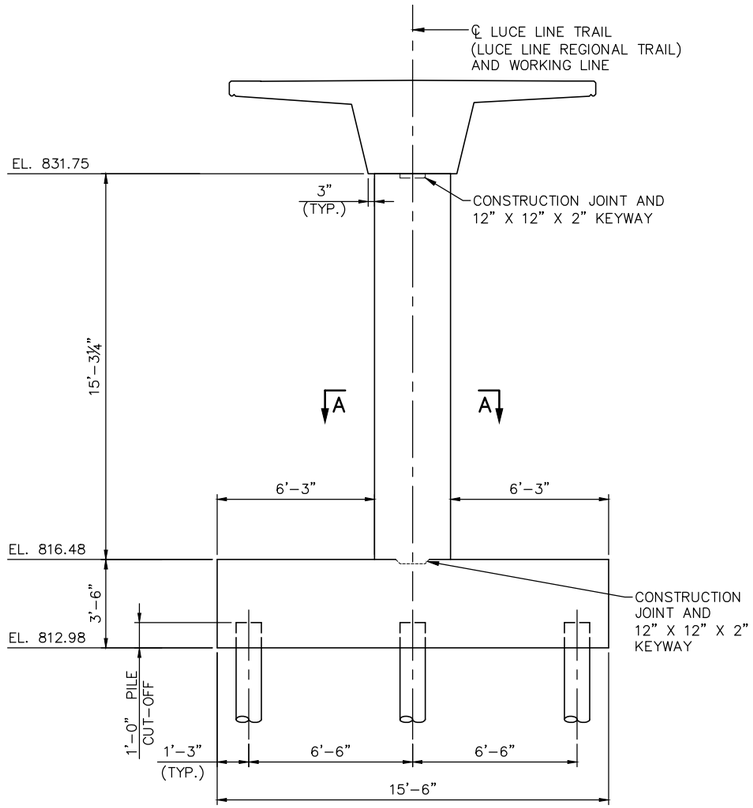

ELEVATION

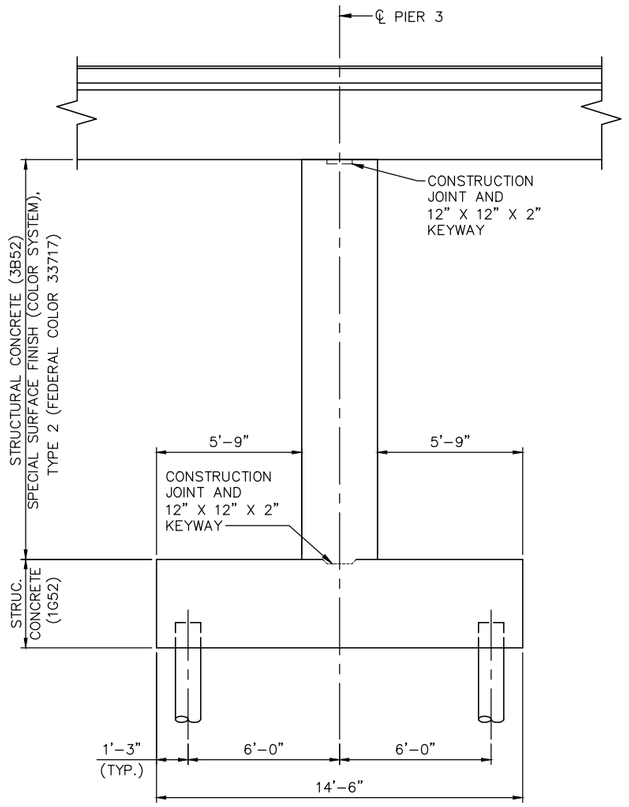

END VIEW

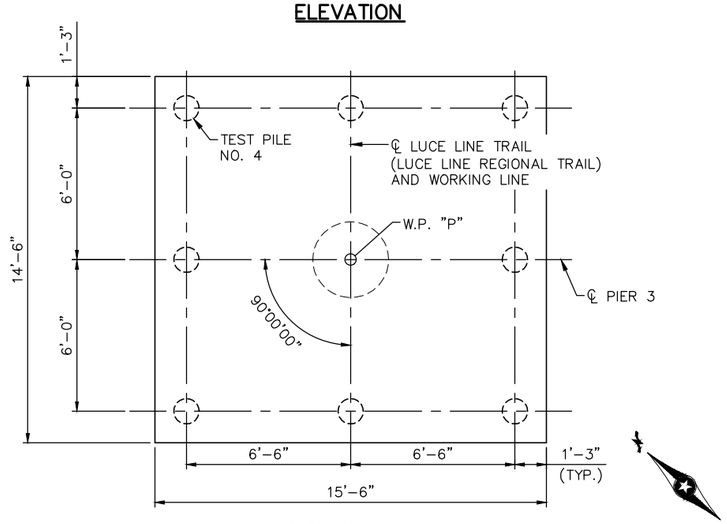

FOOTING PLAN

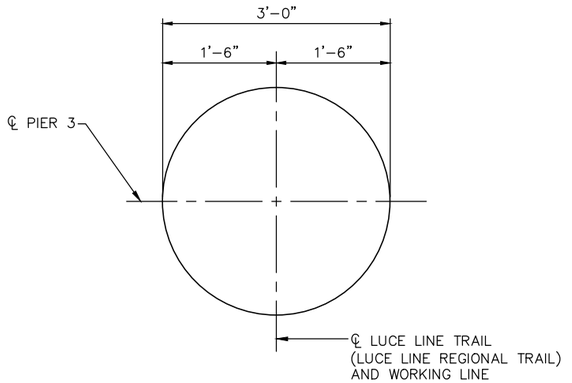

SECTION A–A

PIER 3 COMPUTED PILE LOAD - TONS/PILE	
FACTORED DEAD LOAD + EARTH PRESSURE	60.9
FACTORED LIVE LOAD	12.5
* FACTORED DESIGN LOAD	73.4

* BASED ON STRENGTH V LOAD COMBINATION.

PIER 3 REQUIRED NOMINAL PILE BEARING RESISTANCE FOR C-I-P PILES Rn - TONS/PILE		
FIELD CONTROL METHOD	φdyn	* Rn
PDA	0.65	112.9

* Rn = (FACTORED DESIGN LOAD) / φdyn

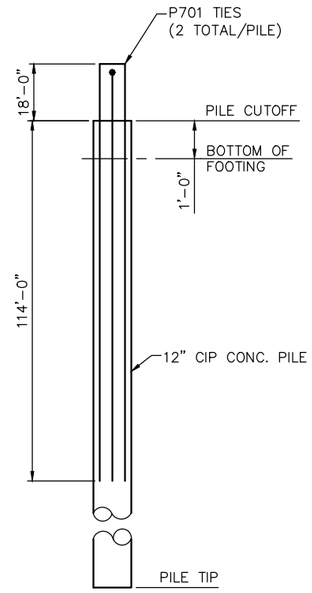

PILE ANCHORAGE DETAIL

PIER 3 PILE NOTES:

1 - 12" CAST-IN-PLACE TEST PILE, 104 FEET LONG.

7 - 12" CAST-IN-PLACE PILES, ESTIMATED LENGTH 94 FEET LONG.

8 - 12" CAST-IN-PLACE PILES REQUIRED AT PIER 3.

ALL PILES TO BE 12" DIA. CAST-IN-PLACE CONCRETE.

PILE SPACING SHOWN IS AT BOTTOM OF FOOTING.

PILES TO HAVE A NOMINAL DIAMETER OF 12" AND A MINIMUM WALL THICKNESS OF ¼".

FOR PILE SPLICE DETAILS, SEE B–DETAIL B201.

NO.	DATE	BY	CHECK	DESIGN	REVISION / SUBMITTAL

DESIGNED BY: PDC | CHECKED BY: SAD
DRAWN BY: JIK | CHECKED BY: SAD

AECOM Kimley»Horn

90% SUBMISSION - 1/22/16

METROPOLITAN COUNCIL

SOUTHWEST Green Line LRT Extension

CIVIL - VOLUME 4G
LUCE LINE TRAIL BRIDGE
BRIDGE R0696
PIER 3 DETAILS

DISCIPLINE: STRUCTURES

SHEET NAME: CBR0696-BRG-PIR-005

SHEET 26 OF 67

Jan. 15 2016 09:47 am V:\3400_ADC\CAD\SEGMENT E4\PLAN SHEETS\STRUCTURES\VNWHT-TRL\CBR0696-BRG-PIR-005.dwg By: Jim.Kimble

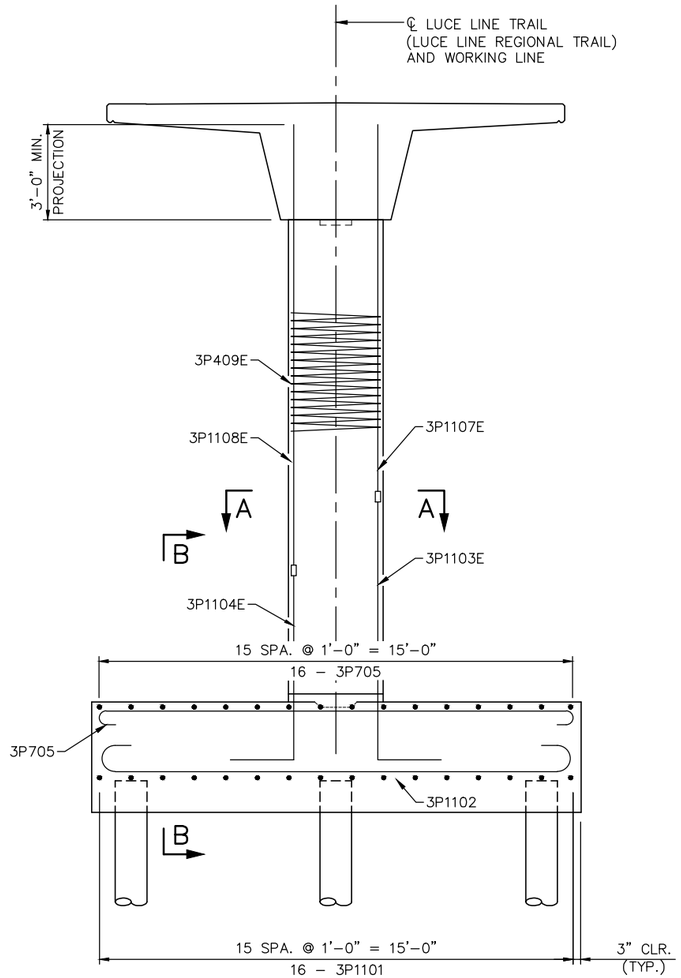

ELEVATION

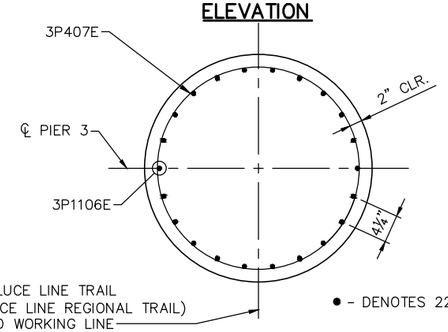

SECTION A–A

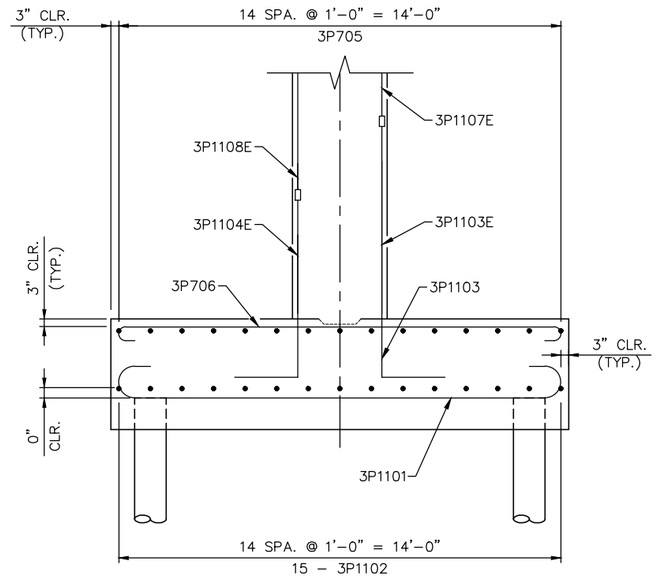

SECTION B–B

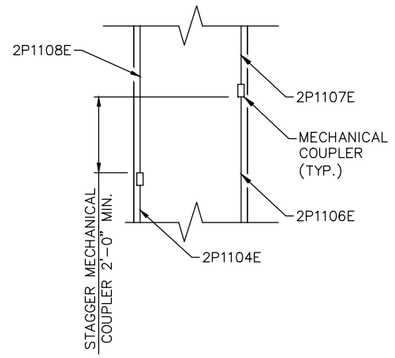

MECHANICAL SPLICE DETAIL

NORTH FOOTING PLAN SOUTH

NOTES:

MECHANICAL COUPLER..USED TO SPLICE BARS

NO.	DATE	BY	CHECK	DESIGN	REVISION / SUBMITTAL

DESIGNED BY: PDC CHECKED BY: SAD
DRAWN BY: JIK CHECKED BY: SAD

AECOM Kimley»Horn

90% SUBMISSION - 1/22/16

METROPOLITAN COUNCIL

SOUTHWEST Green Line LRT Extension

CIVIL - VOLUME 4G
LUCE LINE TRAIL BRIDGE
BRIDGE R0696
PIER 3 REINFORCEMENT

DISCIPLINE: STRUCTURES
SHEET NAME: CBR0696-BRG-PIR-006

SHEET 27 OF 67

Jan, 15 2016 09:47 am V:\3400_ADC\CAD\SEGMENT E4\PLAN SHEETS\STRUCTURES\WNWHT-TRL\CBR0696-BRG-PIR-006.dwg By: Jim.Kimble

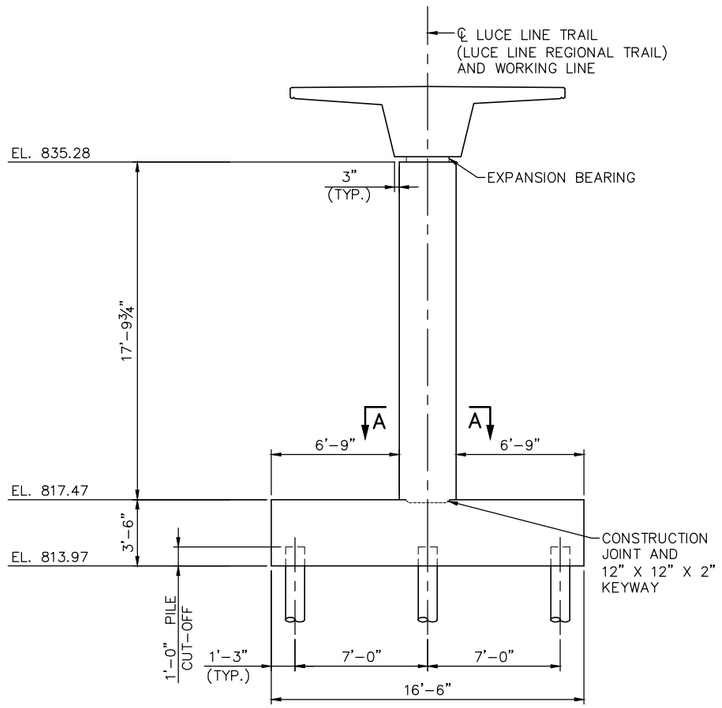

ELEVATION

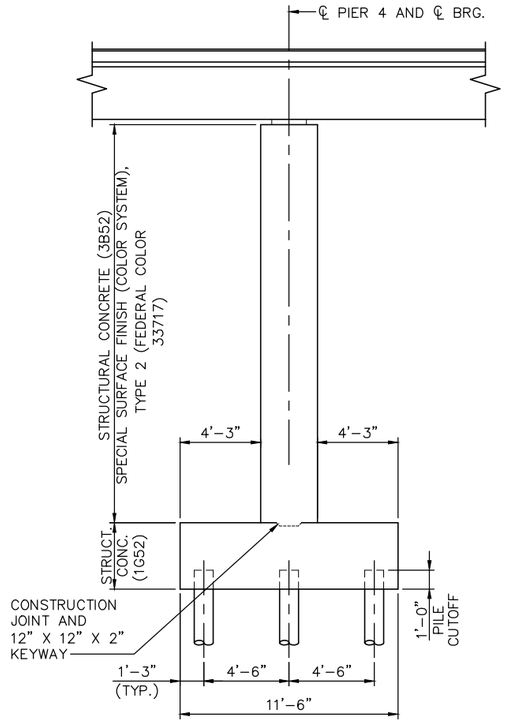

END VIEW

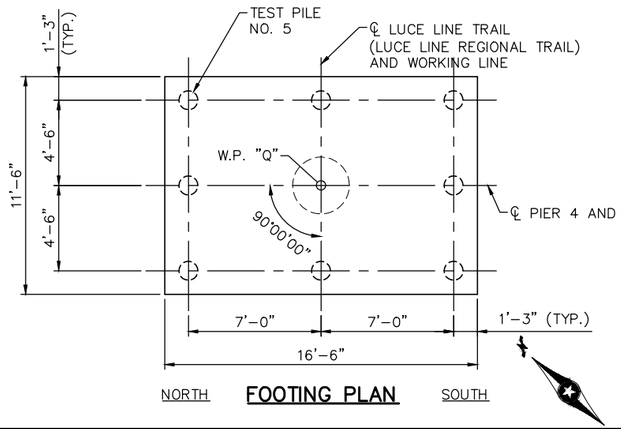

NORTH FOOTING PLAN SOUTH

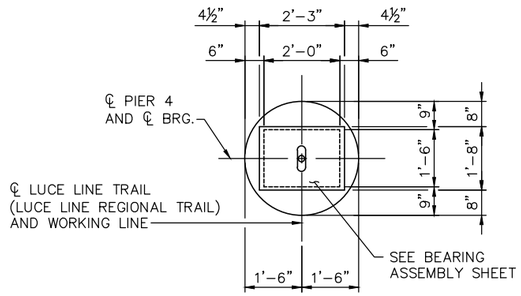

EXPANSION BEARING PLAN VIEW

PIER 4 COMPUTED PILE LOAD - TONS/PILE	
FACTORED DEAD LOAD + EARTH PRESSURE	56.4
FACTORED LIVE LOAD	16.3
* FACTORED DESIGN LOAD	72.7

* BASED ON STRENGTH V LOAD COMBINATION.

PIER 4 REQUIRED NOMINAL PILE BEARING RESISTANCE FOR C-I-P PILES Rn - TONS/PILE		
FIELD CONTROL METHOD	φdyn	* Rn
PDA	0.65	111.9

* Rn = (FACTORED DESIGN LOAD) / φdyn

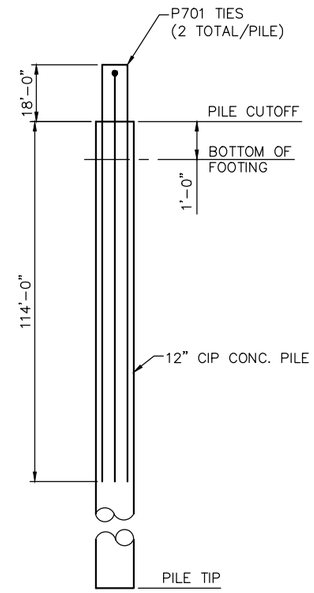

PILE ANCHORAGE DETAIL

PIER 4 PILE NOTES:

1-CAST-IN-PLACE TEST PILE, 108 FEET LONG.

7-CAST-IN-PLACE PILES, ESTIMATED LENGTH 98 FEET.

8-CAST-IN-PLACE PILES REQUIRED FOR PIER 4.

ALL PILES TO BE 12" DIA. CAST-IN-PLACE CONCRETE.

PILE SPACING SHOWN IS AT BOTTOM OF FOOTING.

PILES TO HAVE A NOMINAL DIAMETER OF 12" AND A MINIMUM WALL THICKNESS OF ¼".

FOR PILE SPLICE DETAILS, SEE B-DETAIL B201.

NO.	DATE	BY	CHECK	DESIGN	REVISION / SUBMITTAL

DESIGNED BY: PDC CHECKED BY: SAD
DRAWN BY: JIK CHECKED BY: SAD

AECOM Kimley»Horn

90% SUBMISSION - 1/22/16

METROPOLITAN COUNCIL

SOUTHWEST Green Line LRT Extension

CIVIL - VOLUME 4G
LUCE LINE TRAIL BRIDGE
BRIDGE R0696
PIER 4 DETAILS

DISCIPLINE: STRUCTURES
SHEET NAME: CBR0696-BRG-PIR-007

SHEET 28 OF 67

Jan. 15 2016 09:48 am V:\3400_ADC\CAD\SEGMENT E4\PLAN SHEETS\STRUCTURES\VNWHT-TRL\CBR0696-BRG-PIR-007.dwg By: Jim.Kimble

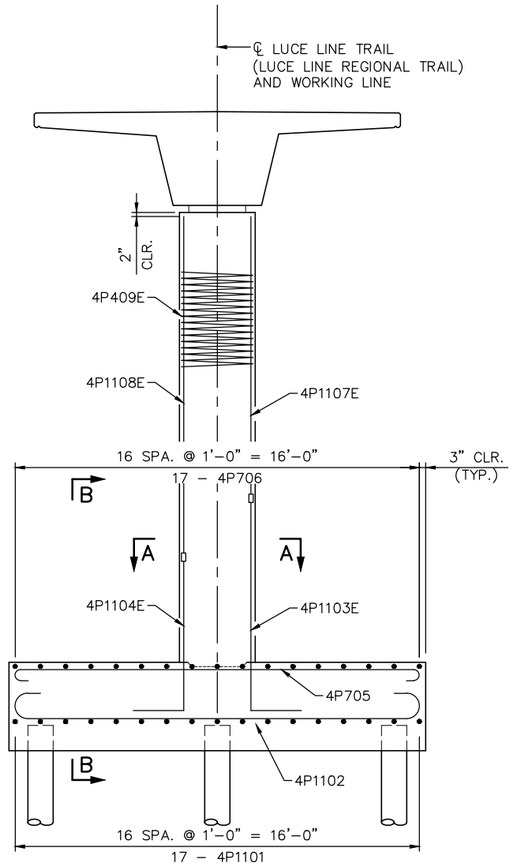

ELEVATION

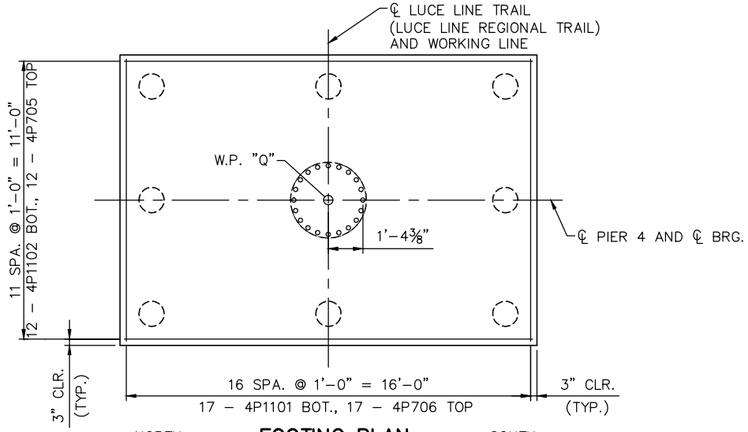

NORTH — SOUTH

FOOTING PLAN

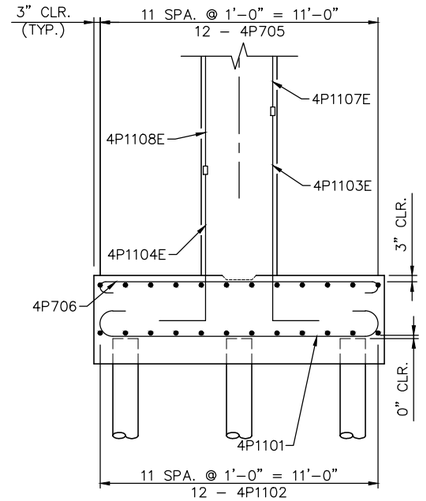

SECTION B–B

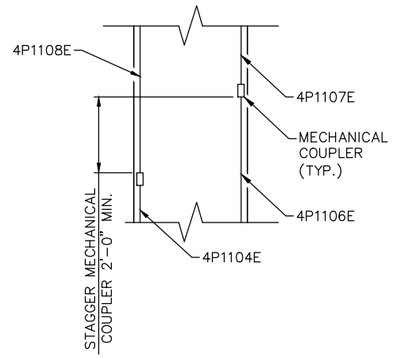

MECHANICAL SPLICE DETAIL

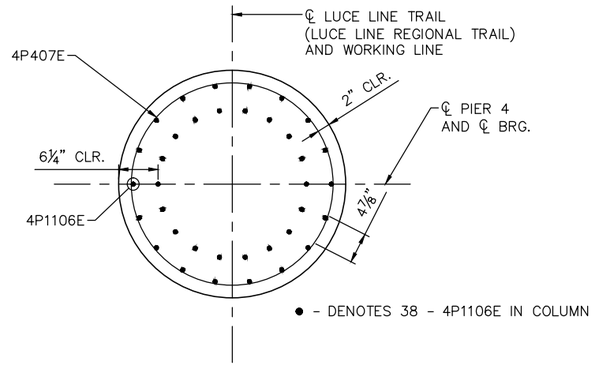

SECTION A–A

NOTES:

MECHANICAL COUPLER USED TO SPLICE BARS

NO.	DATE	BY	CHECK	DESIGN	REVISION / SUBMITTAL

DESIGNED BY: PDC — CHECKED BY: SAD
DRAWN BY: JIK — CHECKED BY: SAD

AECOM Kimley»Horn

90% SUBMISSION - 1/22/16

METROPOLITAN COUNCIL — SOUTHWEST Green Line LRT Extension

CIVIL - VOLUME 4G
LUCE LINE TRAIL BRIDGE
BRIDGE R0696
PIER 4 REINFORCEMENT

DISCIPLINE: STRUCTURES
SHEET NAME: CBR0696-BRG-PIR-008

SHEET 29 OF 67

Jan, 15 2016 09:48 am V:\3400_ADC\CAD\SEGMENT E4\PLAN SHEETS\STRUCTURES\VNWHT-TRL\CBR0696-BRG-PIR-008.dwg By: Jim.Kimble

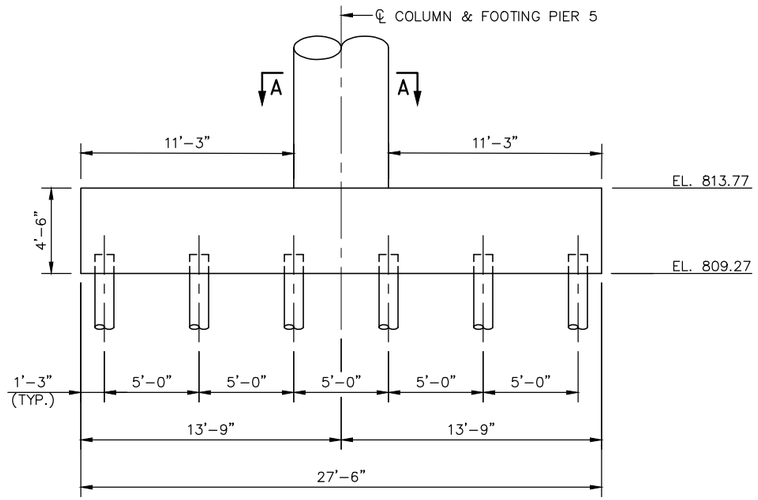

ELEVATION B–B

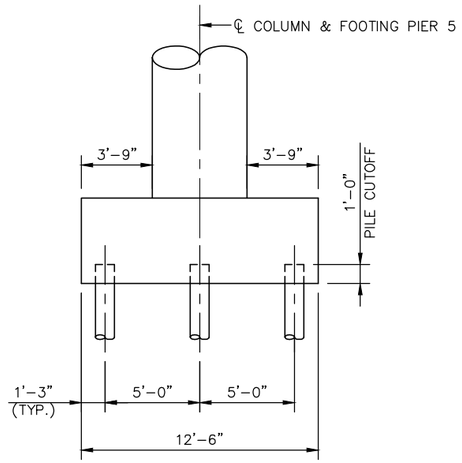

ELEVATION C–C

PIER 5 COMPUTED PILE LOAD - TONS/PILE	
FACTORED DEAD LOAD + EARTH PRESSURE	51.3
FACTORED LIVE LOAD	24.2
* FACTORED DESIGN LOAD	75.5

* BASED ON STRENGTH V LOAD COMBINATION.

PIER 5 REQUIRED NOMINAL PILE BEARING RESISTANCE FOR C-I-P PILES Rn - TONS/PILE		
FIELD CONTROL METHOD	φdyn	* Rn
PDA	0.65	116.2

* Rn = (FACTORED DESIGN LOAD) / φdyn

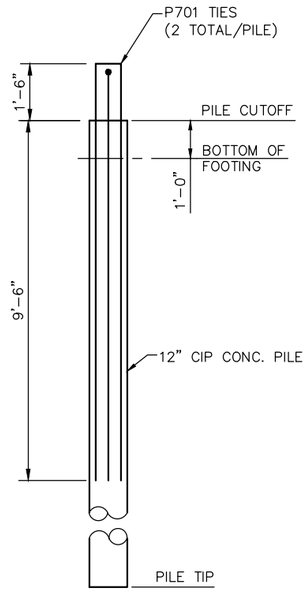

PILE ANCHORAGE DETAIL

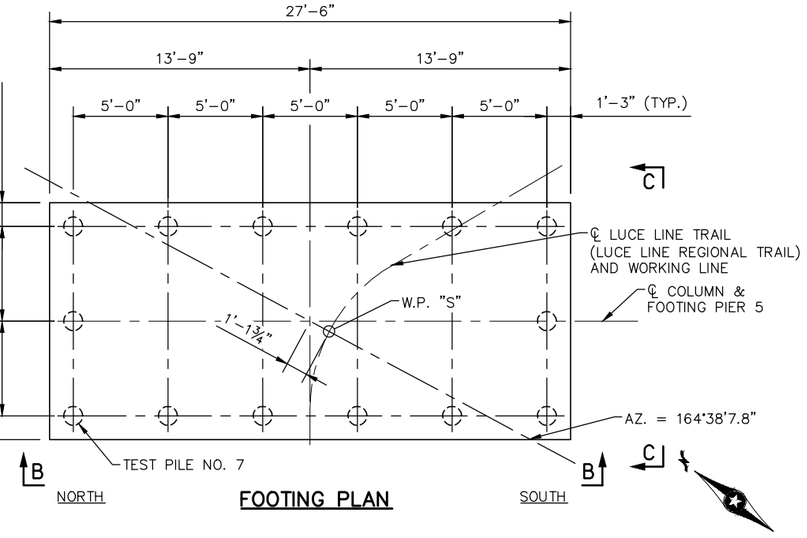

FOOTING PLAN

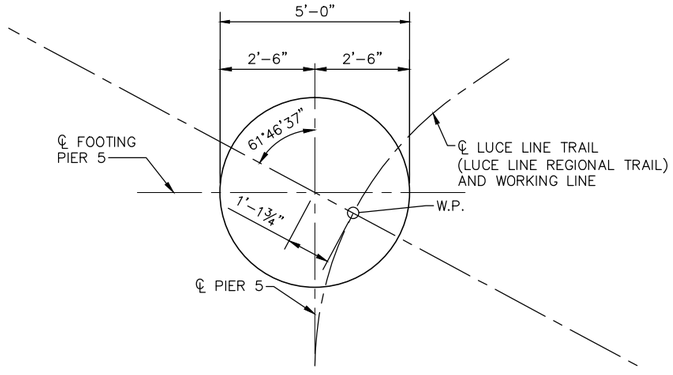

SECTION A–A

PIER 5 PILE NOTES:

1 - 12" CAST-IN-PLACE TEST PILE, 112 FEET LONG.

13 - 12" CAST-IN-PLACE PILES, ESTIMATED LENGTH 102 FEET LONG.

14 - 12" CAST-IN-PLACE PILES REQUIRED AT PIER 5.

ALL PILES TO BE 12" DIA. CAST-IN-PLACE CONCRETE.

PILE SPACING SHOWN IS AT BOTTOM OF FOOTING.

PILES HAVE A NOMINAL DIAMETER OF 12" AND A MINIMUM WALL THICKNESS OF ¼".

FOR PILE SPLICE DETAILS, SEE B–DETAIL B201.

NO.	DATE	BY	CHECK	DESIGN	REVISION / SUBMITTAL

DESIGNED BY: PDC CHECKED BY: SAD
DRAWN BY: JIK CHECKED BY: SAD

AECOM Kimley»Horn

90% SUBMISSION - 1/22/16

METROPOLITAN COUNCIL

SOUTHWEST Green Line LRT Extension

CIVIL - VOLUME 4G
LUCE LINE TRAIL BRIDGE
BRIDGE R0696
PIER 5 DETAILS 1

DISCIPLINE: STRUCTURES

SHEET NAME: CBR0696-BRG-PIR-009

SHEET 30 OF 67

Jan. 15 2016 09:48 am V:\3400_ADC\CAD\SEGMENT E4\PLAN SHEETS\STRUCTURES\WNWHT-TRL\CBR0696-BRG-PIR-009.dwg By: Jim.Kimble

NOTES:

1. ELEVATIONS SHOWN ARE ESTIMATED ONLY. CONTRACTOR SHALL VERIFY ELEVATIONS BASED ON PREMANUFACTURED TRUSS GEOMETRY AND TRUSS BEARING ASSEMBLIES.
2. ℄ BEARING FOR PREMANUFACTURED TRUSS SHALL BE VERIFIED BY CONTRACTOR.

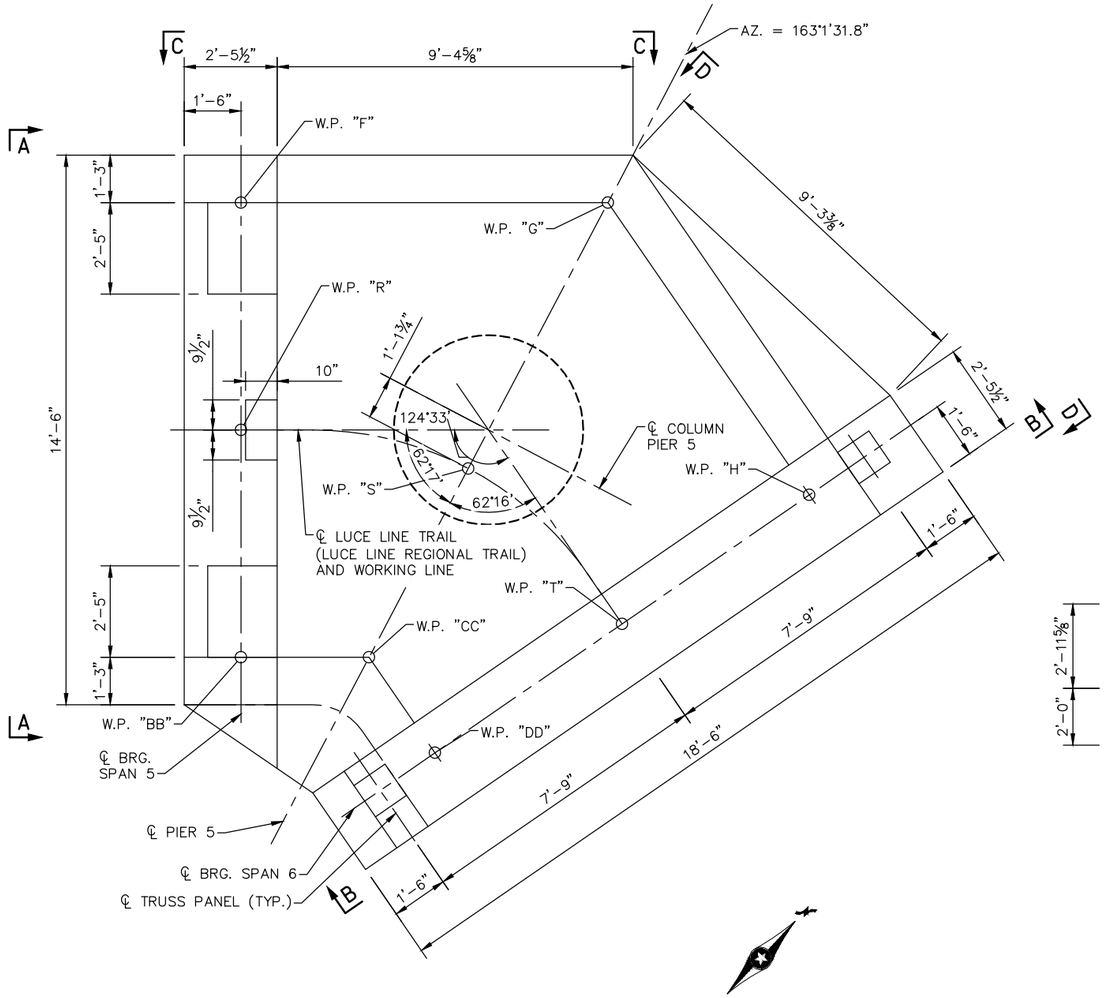

PLAN

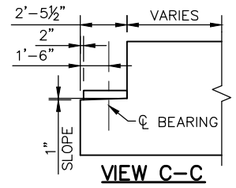

VIEW C–C

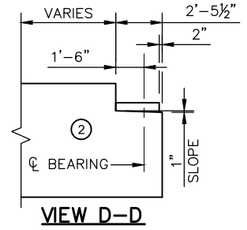

VIEW D–D

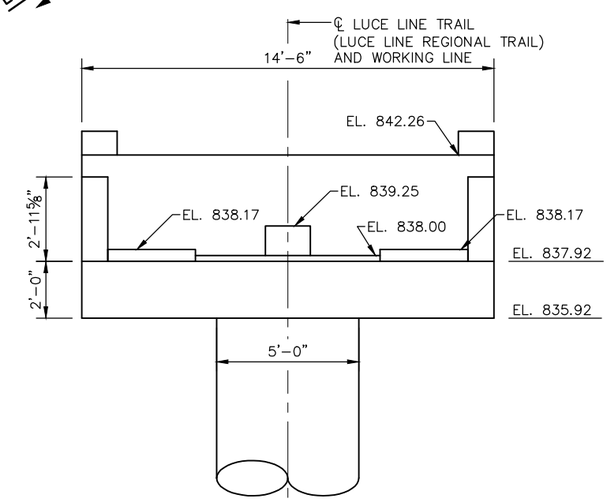

VIEW A–A

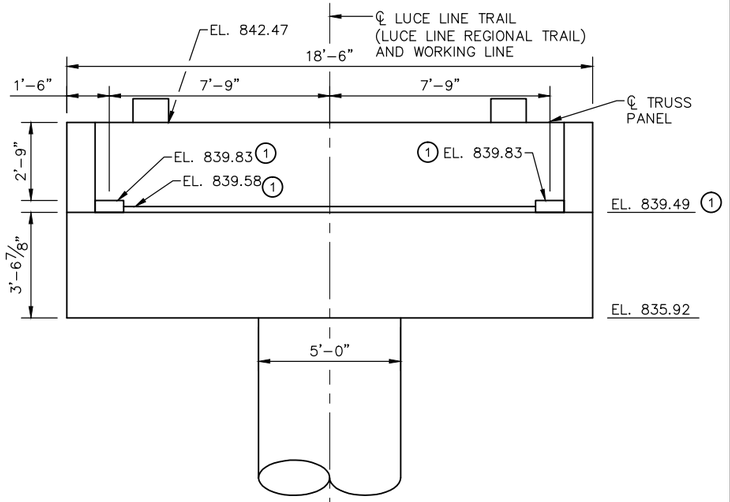

VIEW B–B

NO.	DATE	BY	CHECK	DESIGN	REVISION / SUBMITTAL

DESIGNED BY: PDC | CHECKED BY: SAD
DRAWN BY: JIK | CHECKED BY: SAD

AECOM Kimley»Horn

90% SUBMISSION - 1/22/16

METROPOLITAN COUNCIL

SOUTHWEST Green Line LRT Extension

CIVIL - VOLUME 4G
LUCE LINE TRAIL BRIDGE
BRIDGE R0696
PIER 5 DETAILS 2

DISCIPLINE: STRUCTURES
SHEET NAME: CBR0696-BRG-PIR-010

SHEET 31 OF 67

Jan, 15 2016 09:49 am V:\3400_ADC\CAD\SEGMENT E4\PLAN SHEETS\STRUCTURES\VNWHT-TRL\CBR0696-BRG-PIR-010.dwg By: Jim.Kimble

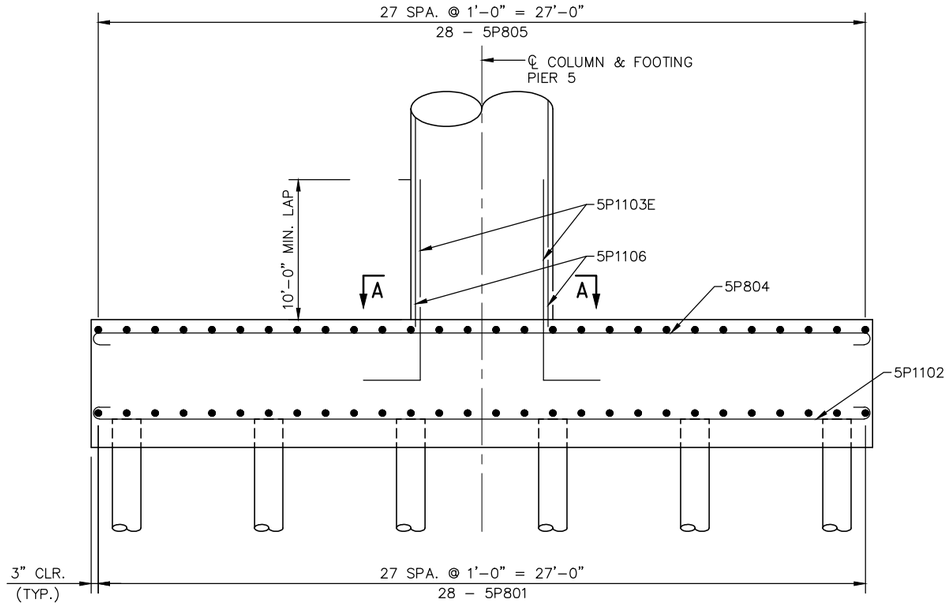

ELEVATION B-B

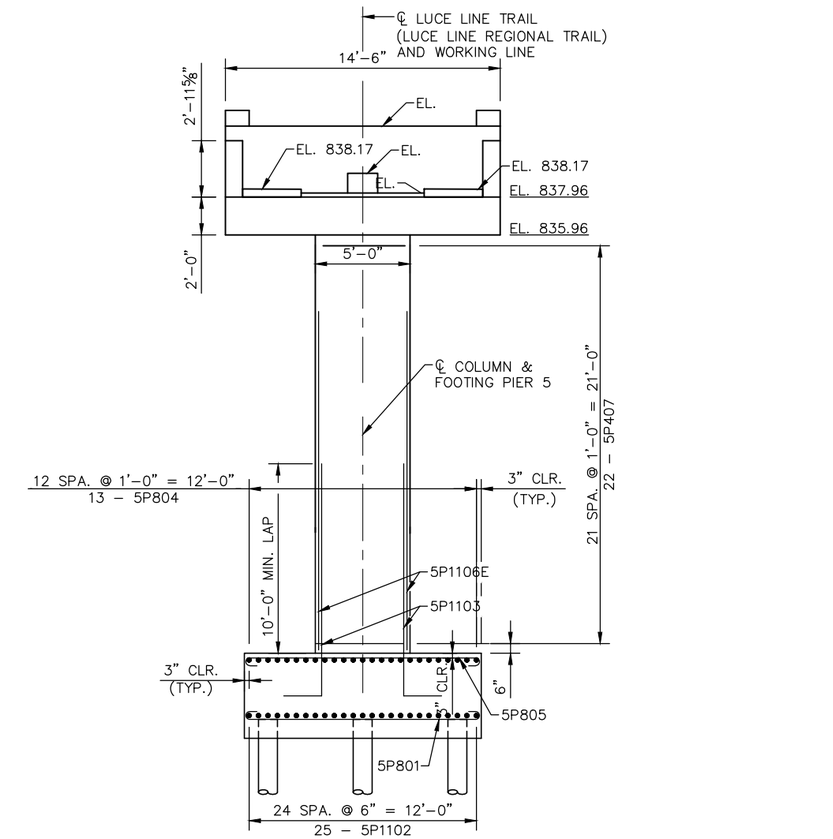

ELEVATION C-C

FOOTING PLAN

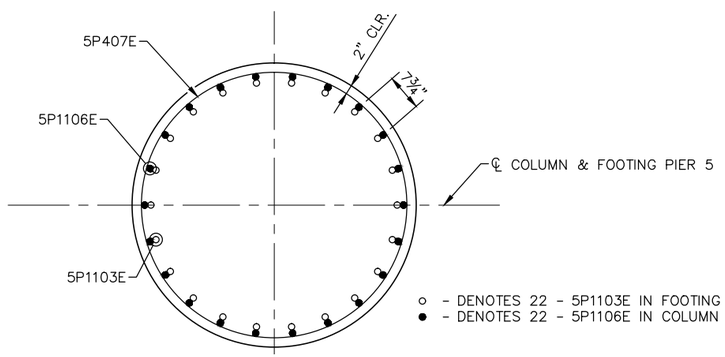

SECTION A-A

NO.	DATE	BY	CHECK	DESIGN	REVISION / SUBMITTAL

DESIGNED BY: PDC | CHECKED BY: SAD
DRAWN BY: JIK | CHECKED BY: SAD

AECOM Kimley»Horn

90% SUBMISSION - 1/22/16

METROPOLITAN COUNCIL

SOUTHWEST Green Line LRT Extension

CIVIL - VOLUME 4G
LUCE LINE TRAIL BRIDGE
BRIDGE R0696
PIER 5 REINFORCEMENT 1

DISCIPLINE: STRUCTURES

SHEET NAME: CBR0696-BRG-PIR-011

SHEET 32 OF 67

Jan, 15 2016 09:49 am v:\3400_ADC\CAD\SEGMENT E4\PLAN SHEETS\STRUCTURES\WWHT-TRL\CBR0696-BRG-PIR-011.dwg By: Jim.Kimble

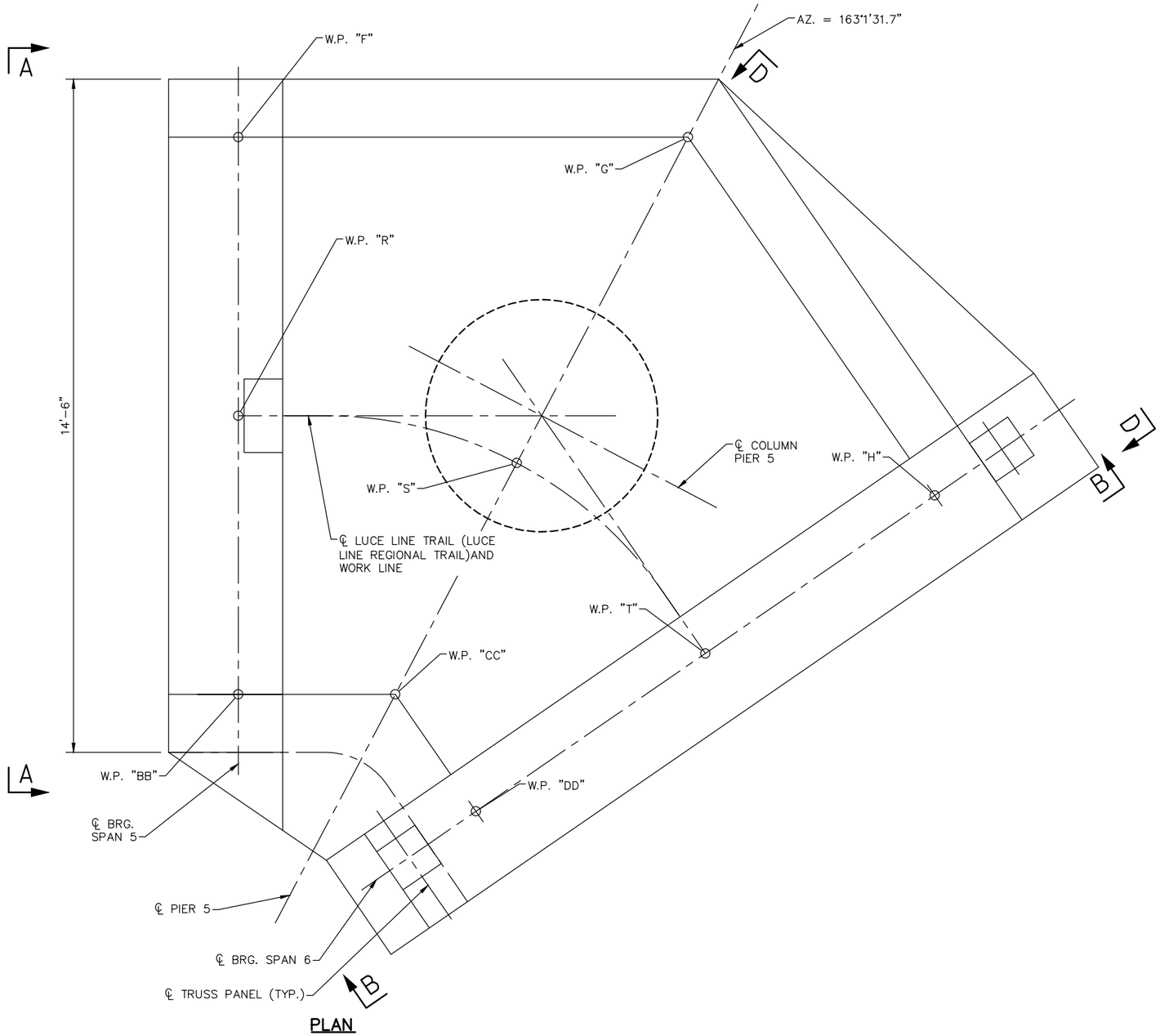

PLAN

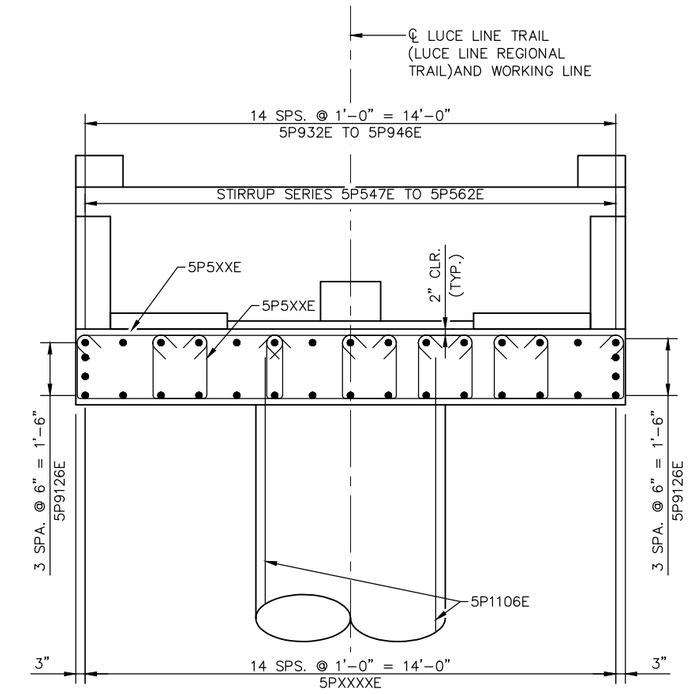

VIEW A–A

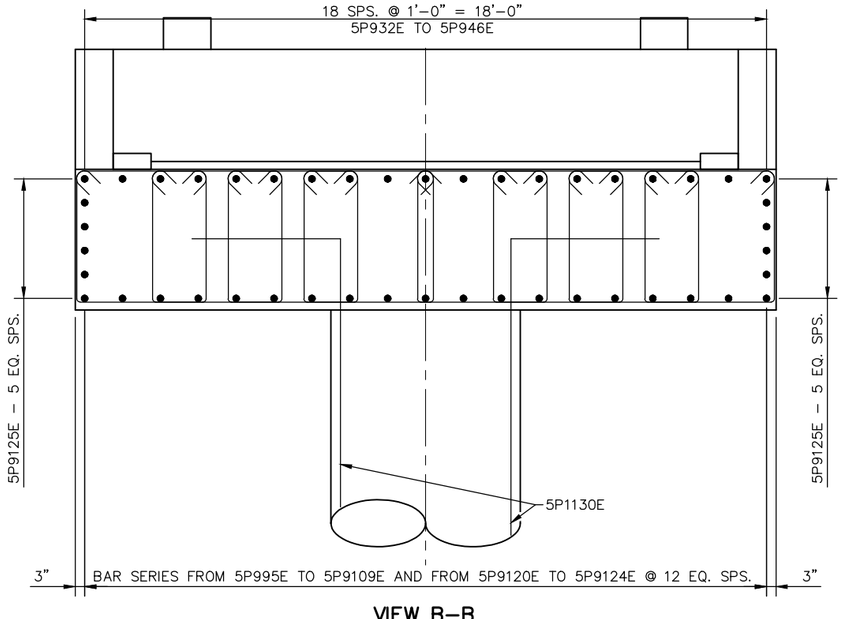

VIEW B–B

NO.	DATE	BY	CHECK	DESIGN	REVISION / SUBMITTAL

DESIGNED BY: PDC CHECKED BY: SAD
DRAWN BY: JIK CHECKED BY: SAD

AECOM Kimley»Horn

90% SUBMISSION - 1/22/16

METROPOLITAN COUNCIL

SOUTHWEST Green Line LRT Extension

CIVIL - VOLUME 4G
LUCE LINE TRAIL BRIDGE
BRIDGE R0696
PIER 5 REINFORCEMENT 2

DISCIPLINE: STRUCTURES

SHEET NAME: CBR0696-BRG-PIR-012

SHEET 33 OF 67

Jan, 15 2016 09:50 am V:\3400_ADC\CAD\SEGMENT E4\PLAN SHEETS\STRUCTURES\VNWHT-TRL\CBR0696-BRG-PIR-012.dwg By: Jim.Kimble

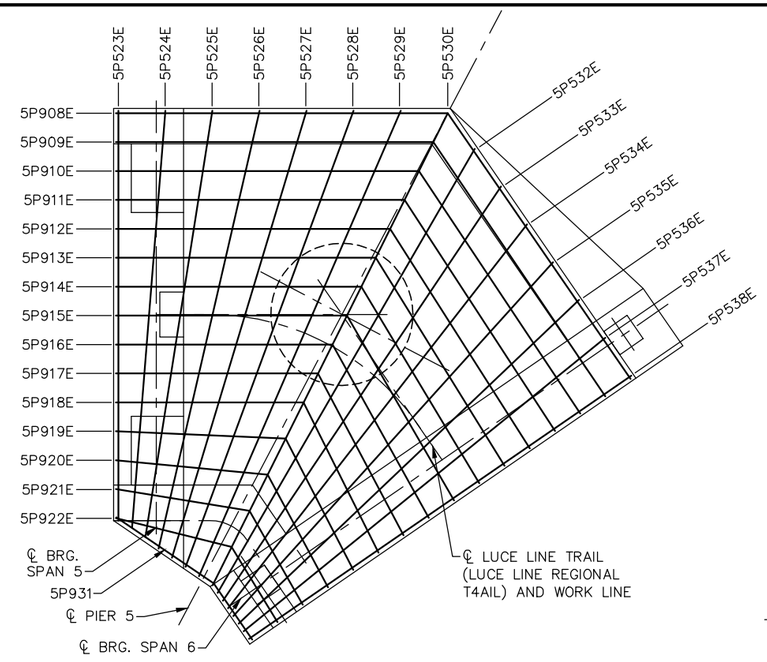

ELEVATION A

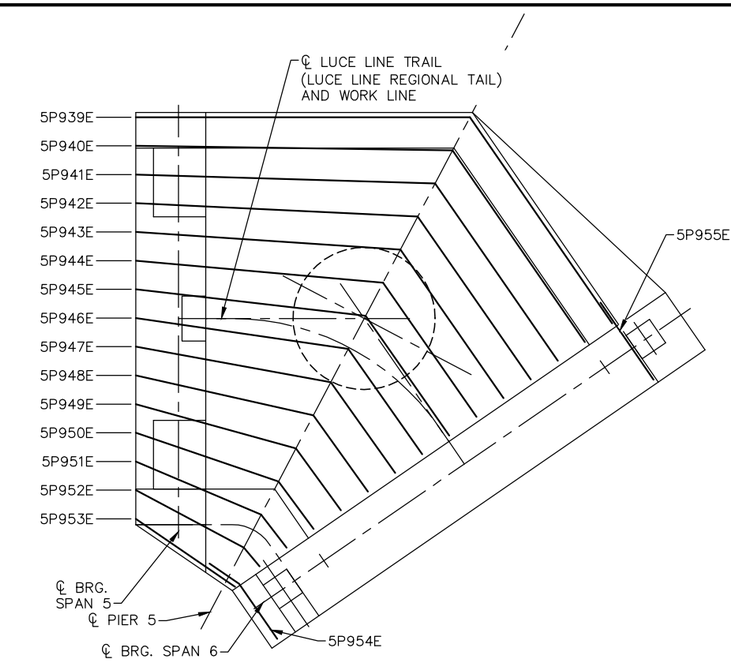

ELEVATION B

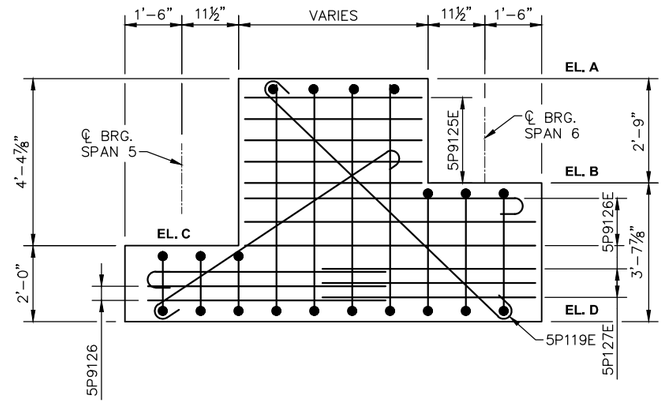

SIDE OF CAP

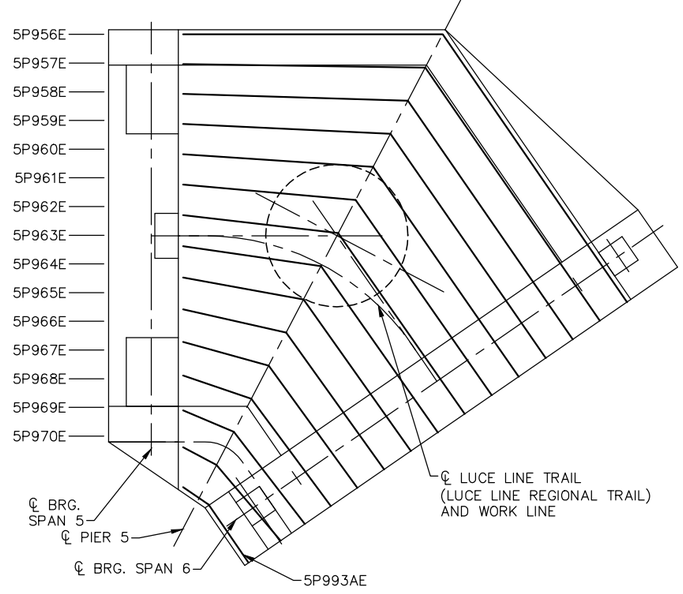

ELEVATION C

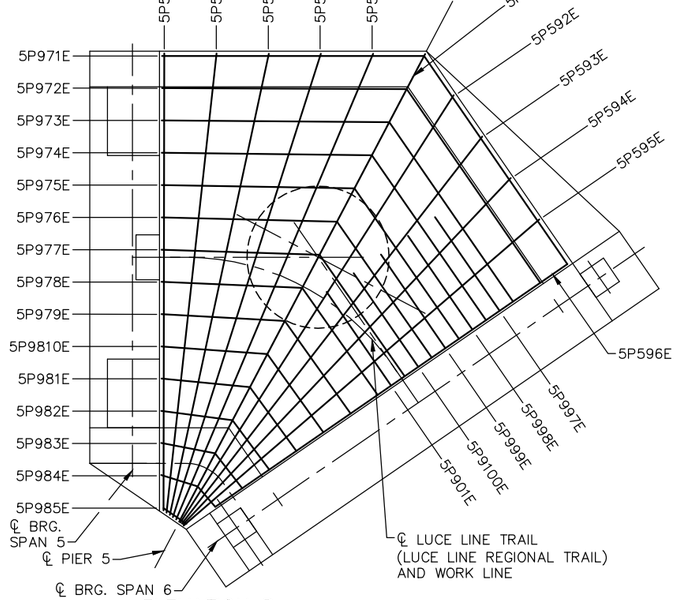

ELEVATION D

NO.	DATE	BY	CHECK	DESIGN	REVISION / SUBMITTAL

DESIGNED BY: PDC | CHECKED BY: SAD
DRAWN BY: JIK | CHECKED BY: SAD

AECOM Kimley»Horn

90% SUBMISSION - 1/22/16

METROPOLITAN COUNCIL

SOUTHWEST Green Line LRT Extension

CIVIL - VOLUME 4G
LUCE LINE TRAIL BRIDGE
BRIDGE R0696
PIER 5 REINFORCEMENT 3

DISCIPLINE: STRUCTURES

SHEET NAME: CBR0696-BRG-PIR-013

SHEET 34 OF 67

Jan. 15 2016 09:50 am v:\3400_ADC\CAD\SEGMENT E4\PLAN SHEETS\STRUCTURES\VNWHT-TRL\CBR0696-BRG-PIR-013.dwg By: Jim.Kimble

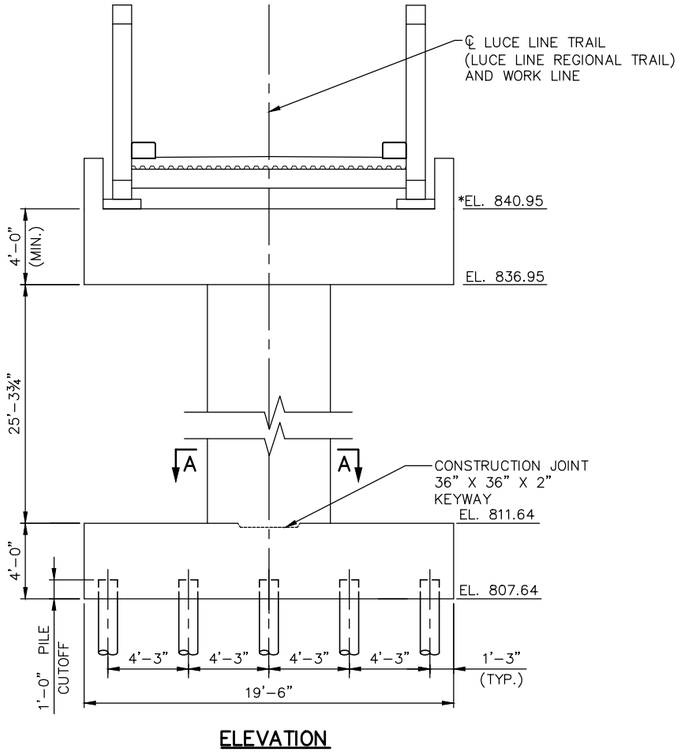

ELEVATION

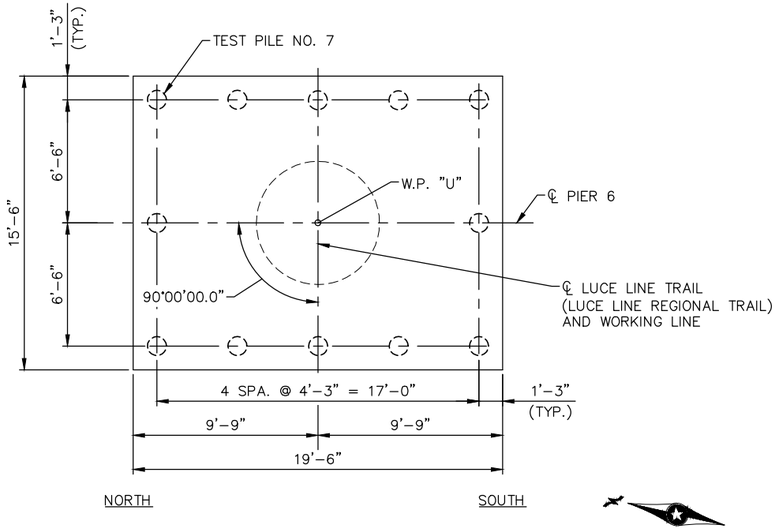

FOOTING PLAN

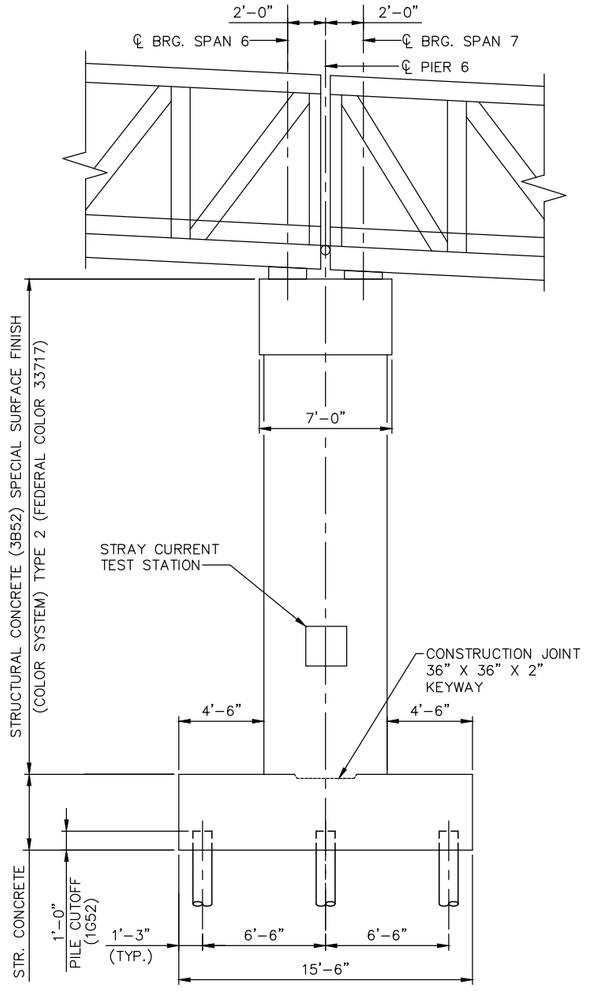

END VIEW

PIER 6 COMPUTED PILE LOAD - TONS/PILE	
FACTORED DEAD LOAD + EARTH PRESSURE	56.4
FACTORED LIVE LOAD	23.1
* FACTORED DESIGN LOAD	79.5

* BASED ON STRENGTH V LOAD COMBINATION.

PIER 6 REQUIRED NOMINAL PILE BEARING RESISTANCE FOR C-I-P PILES Rn - TONS/PILE		
FIELD CONTROL METHOD	φdyn	* Rn
PDA	0.65	122.2

* Rn = (FACTORED DESIGN LOAD) / φdyn

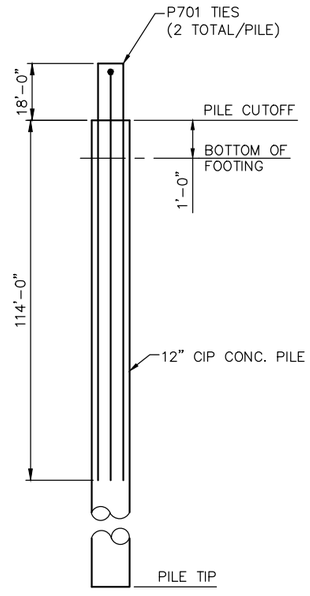

PILE ANCHORAGE DETAIL

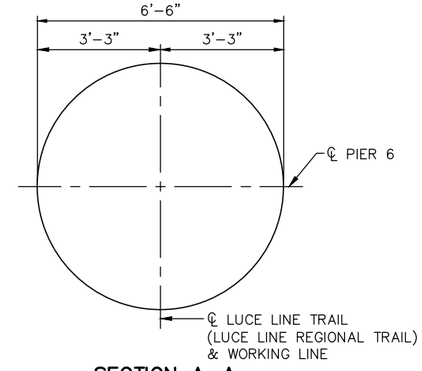

SECTION A-A

NOTES:

* PEDESTAL AND BEAM SEAT ELEVATIONS SHOWN ARE ESTIMATED ONLY. CONTRACTOR SHALL VERIFY ELEVATIONS BASED ON PREMANUFACTURED TRUSS GEOMETRY AND TRUSS BEARING ASSEMBLIES.

℄ BEARING FOR PREMANUFACTURED TRUSS SHALL BE VERIFIED BY CONTRACTOR.

THE TRUSS SHALL FOLLOW THE GRADE OF THE PROFILE.

BLACK REBAR IN THE FOOTING SHALL BE MADE ELECTRICALLY CONTINUOUS WITHIN THE FOOTING. SEE SHEET EO-SYS-CORR-DTL-001.

STEEL SHELLS OF C-I-P PILES IN THE FOOTING SHALL BE MADE ELECTRICALLY CONTINUOUS WITH WELDED REBAR IN FOOTING. SEE DETAILS ON SHEET EO-SYS-CORR-DTL-008.

ELECTRICAL ISOLATION SHALL BE MAINTAINED BETWEEN THE EPOXY COATED REBAR IN THE COLUMN AND THE BLACK REBAR IN THE FOOTING.

PIER 6 PILE NOTES:

1-12" CAST-IN-PLACE TEST PILE, 98 FEET LONG.

17-12" CAST-IN-PLACE PILES, ESTIMATED LENGTH 88 FEET.

18-CAST-IN-PLACE PILES REQUIRED FOR PIER 6.

ALL PILES TO BE 12" DIA. CAST-IN-PLACE CONCRETE.

PILE SPACING SHOWN IS AT BOTTOM OF FOOTING.

PILES TO HAVE A NOMINAL DIAMETER OF 12" AND A MINIMAL WALL THICKNESS OF 4".

FOR PILE SPLICE DETAILS, SEE B-DETAIL B201.

NO.	DATE	BY	CHECK	DESIGN	REVISION / SUBMITTAL

DESIGNED BY: PDC CHECKED BY: SAD
DRAWN BY: JIK CHECKED BY: SAD

AECOM Kimley»Horn

90% SUBMISSION - 1/22/16

METROPOLITAN COUNCIL

SOUTHWEST Green Line LRT Extension

CIVIL - VOLUME 4G
LUCE LINE TRAIL BRIDGE
BRIDGE R0696
PIER 6 DETAILS

DISCIPLINE: STRUCTURES

SHEET NAME: CBR0696-BRG-PIR-014

SHEET 35 OF 67

Jan, 15 2016 09:50 am V:\3400_ADC\CAD\SEGMENT E4\PLAN SHEETS\STRUCTURES\VNWHT-TRL\CBR0696-BRG-PIR-014.dwg By: Jim.Kimble

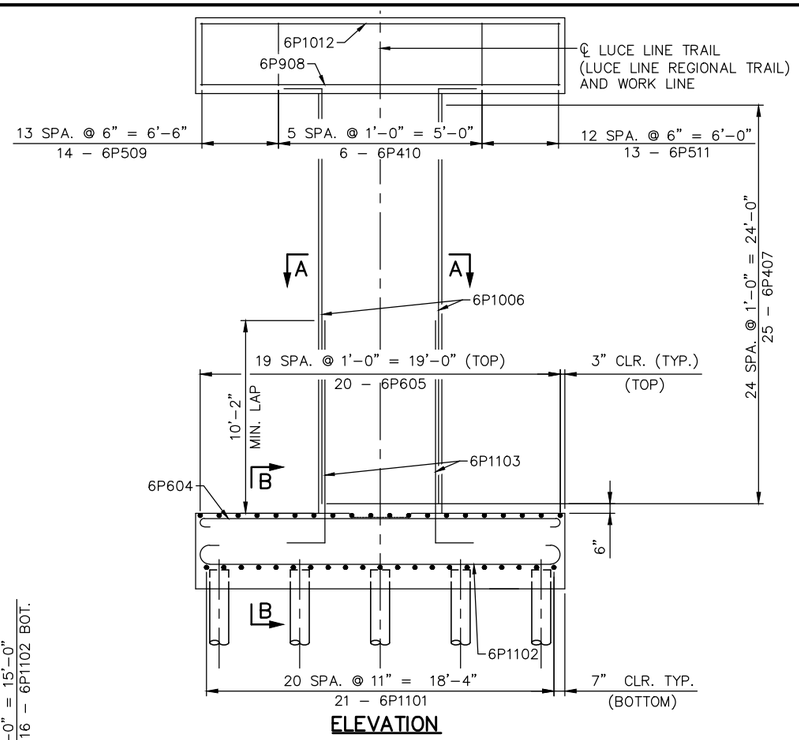

ELEVATION

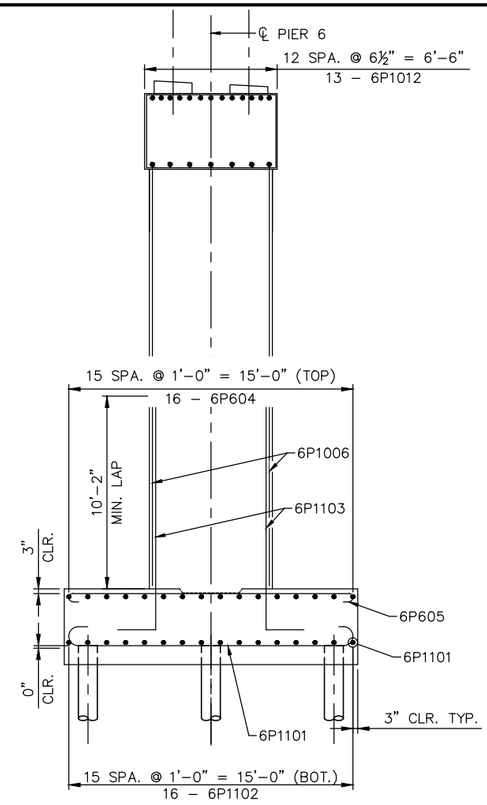

SECTION B-B

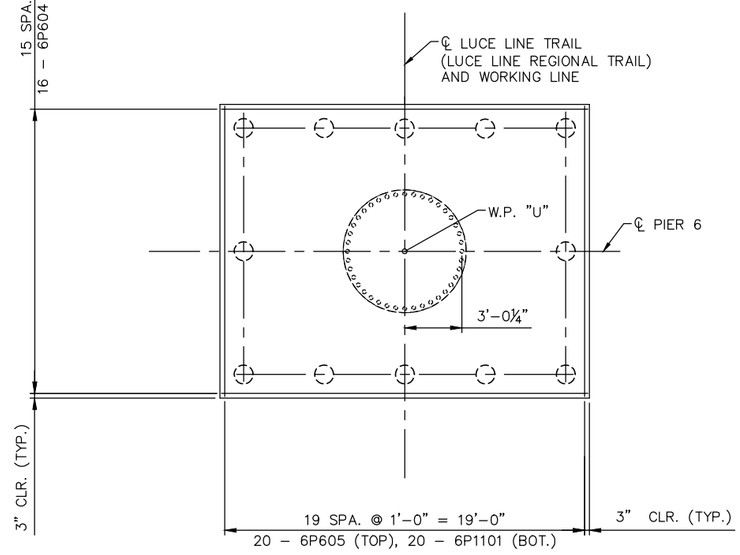

NORTH

FOOTING PLAN

SOUTH

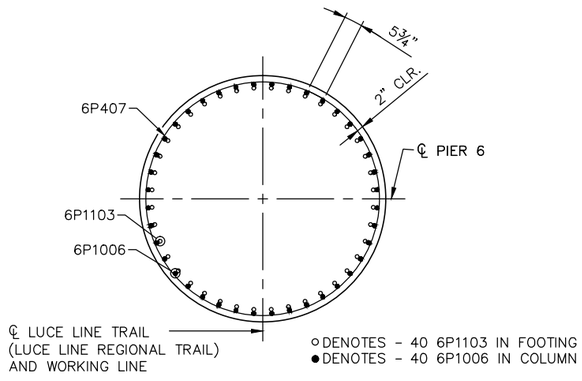

SECTION A-A

NO.	DATE	BY	CHECK	DESIGN	REVISION / SUBMITTAL

DESIGNED BY: PDC | CHECKED BY: SAD
DRAWN BY: JIK | CHECKED BY: SAD

AECOM Kimley»Horn

90% SUBMISSION - 1/22/16

METROPOLITAN COUNCIL

SOUTHWEST Green Line LRT Extension

CIVIL - VOLUME 4G
LUCE LINE TRAIL BRIDGE
BRIDGE R0696
PIER 6 REINFORCEMENT

DISCIPLINE: STRUCTURES

SHEET NAME: CBR0696-BRG-PIR-015

SHEET 36 OF 67

Jan, 15 2016 09:51 am V:\3400_ADC\CAD\SEGMENT E4\PLAN SHEETS\STRUCTURES\VNWHT-TRL\CBR0696-BRG-PIR-015.dwg By: Jim.Kimble

BILL OF REINFORCEMENT FOR PIER 1				
BAR	NO.	LENGTH	SHAPE	LOCATION
1P1001	15	14'-10"	BENT	FOOTING LONGITUDINAL, BOT.
1P902	13	16'-6"	BENT	FOOTING TRANSVERSE, BOT.
1P1003E	14	13'-8"	BENT	FOOTING DOWEL
1P704	13	16'-6"	BENT	FOOTING TRANSVERSE, TOP
1P705	15	14'-10"	BENT	FOOTING TRANSVERSE, TOP
1P406E	1	8'-8"	SPIRAL	COLUMN SPIRAL

BILL OF REINFORCEMENT FOR PIER 2				
BAR	NO.	LENGTH	SHAPE	LOCATION
2P1101	16	16'-0"	BENT	FOOTING LONGITUDINAL, BOT.
2P1102	15	17'-0"	BENT	FOOTING TRANSVERSE, BOT.
2P1103E	10	10'-3"	BENT	FOOTING DOWEL
2P1104E	10	11'-9"	BENT	FOOTING DOWEL
2P705	15	17'-0"	BENT	FOOTING TRANSVERSE, TOP
2P706	16	16'-0"	BENT	FOOTING LONGITUDINAL, TOP
2P1107E	10	10'-6"	STR.	COLUMN, VERTICAL
2P1108E	10	9'-9"	STR.	COLUMN, VERTICAL
2P409E	1	13'-9½"	SPIRAL	COLUMN, SPIRAL

BILL OF REINFORCEMENT FOR PIER 3				
BAR	NO.	LENGTH	SHAPE	LOCATION
3P1101	16	16'-0"	BENT	FOOTING LONGITUDINAL, BOT.
3P1102	15	17'-0"	BENT	FOOTING TRANSVERSE, BOT.
3P1103E	11	10'-3"	BENT	FOOTING DOWEL
3P1104E	11	11'-9"	BENT	FOOTING DOWEL
3P705	15	17'-0"	BENT	FOOTING TRANSVERSE, TOP
3P706	16	16'-0"	BENT	FOOTING LONGITUDINAL, TOP
3P1107E	11	12'-0"	STR.	COLUMN, VERTICAL
3P1108E	11	10'-6"	STR.	COLUMN, VERTICAL
3P409E	1	15'-1"	SPIRAL	COLUMN, SPIRAL

BILL OF REINFORCEMENT FOR PIER 4				
BAR	NO.	LENGTH	SHAPE	LOCATION
4P1101	17	13'-0"	BENT	FOOTING LONGITUDINAL, BOT.
4P1102	12	18'-0"	BENT	FOOTING TRANSVERSE, BOT.
4P1103E	18	12'-3"	BENT	FOOTING DOWEL
4P1104E	18	13'-9"	BENT	FOOTING DOWEL
4P705	17	13'-0"	BENT	FOOTING TRANSVERSE, TOP
4P706	12	18'-0"	BENT	FOOTING LONGITUDINAL, TOP
4P1107E	18	9'-7"	STR.	COLUMN, VERTICAL
4P1108E	18	8'-1"	STR.	COLUMN, VERTICAL
4P409E	1	17'-5"	SPIRAL	COLUMN, SPIRAL

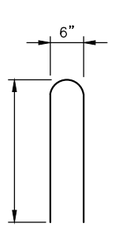

B515E

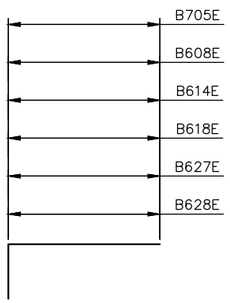

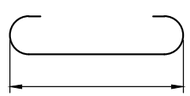

B702

Jan, 15 2016 09:51 am v:\3400_ADC\CAD\SEGMENT E4\PLAN SHEETS\STRUCTURES\VNWHT-TRL\CBR0696-BRG-PIR-016.dwg By: Jim.Kimble

NO.	DATE	BY	CHECK	DESIGN	REVISION / SUBMITTAL

DESIGNED BY: PDC CHECKED BY: SAD
DRAWN BY: JIK CHECKED BY: SAD

AECOM Kimley»Horn

90% SUBMISSION - 1/22/16

METROPOLITAN COUNCIL

SOUTHWEST Green Line LRT Extension

CIVIL - VOLUME 4G
LUCE LINE TRAIL BRIDGE
BRIDGE R0696
SUBSTRUCTURE REINFORCEMENT 1

DISCIPLINE: STRUCTURES

SHEET NAME: CBR0696-BRG-PIR-016

SHEET 37 OF 67

BILL OF REINFORCEMENT FOR PIER 5				
BAR	NO.	LENGTH	SHAPE	LOCATION
5P801	28	28'-10"	BENT	FOOTING LONGITUDINAL, BOT.
5P1102	25	16'-0"	BENT	FOOTING TRANSVERSE, BOT.
5P1103E	22	13'-3"	BENT	FOOTING DOWEL
5P504	13	16'-0"	BENT	FOOTING TRANSVERSE, TOP
5P805	28	28'-0"	BENT	FOOTING LONGITUDINAL, TOP
5P1106E	18	9'-7"	STR.	COLUMN, VERTICAL
5P1107E	18	9'-7"	STR.	COLUMN, TIES
5P908E	1	23'-1"	BENT	CAP, ELEVATION A
5P909E	1	21'-0"	BENT	CAP, ELEVATION A
5P910E	1	20'-11"	BENT	CAP, ELEVATION A
5P911E	1	19'-10½"	BENT	CAP, ELEVATION A
5P912E	1	18'-10"	BENT	CAP, ELEVATION A
5P913E	1	17'-9"	BENT	CAP, ELEVATION A
5P914E	1	16'-8"	BENT	CAP, ELEVATION A
5P915E	1	15'-8"	BENT	CAP, ELEVATION A
5P916E	1	14'-7"	BENT	CAP, ELEVATION A
5P917E	1	13'-6"	BENT	CAP, ELEVATION A
5P918E	1	12'-1"	BENT	CAP, ELEVATION A
5P919E	1	11'-1"	BENT	CAP, ELEVATION A
5P920E	1	9'-10"	BENT	CAP, ELEVATION A
5P921E	1	9'-3"	BENT	CAP, ELEVATION A
5P922E	1	7'-3½"	BENT	CAP, ELEVATION A
5P923E	1	6'-6"	BENT	CAP, ELEVATION A
5P524E	1	14'-5"	STR.	CAP, ELEVATION A
5P525E	1	14'-8"	STR.	CAP, ELEVATION A
5P526E	1	15'-2"	STR.	CAP, ELEVATION A
5P527E	1	15'-9"	STR.	CAP, ELEVATION A
5P528E	1	16'-5"	STR.	CAP, ELEVATION A
5P529E	1	17'-1"	STR.	CAP, ELEVATION A
5P530E	1	17'-10"	STR.	CAP, ELEVATION A
5P531E	1	18'-6"	STR.	CAP, ELEVATION A
5P532E	1	18'-0"	STR.	CAP, ELEVATION A
5P533E	1	17'-6"	STR.	CAP, ELEVATION A
5P534E	1	17'-1"	STR.	CAP, ELEVATION A
5P535E	1	16'-9"	STR.	CAP, ELEVATION A
5P536E	1	16'-6"	STR.	CAP, ELEVATION A
5P537E	1	16'-4"	STR.	CAP, ELEVATION A
5P538E	1	16'-4"	STR.	CAP, ELEVATION A
5P939E	1	20'-6"	BENT	CAP, ELEVATION B
5P940E	1	19'-4"	BENT	CAP, ELEVATION B
5P941E	1	18'-1"	BENT	CAP, ELEVATION B
5P942E	1	16'-11"	BENT	CAP, ELEVATION B
5P943E	1	15'-8"	BENT	CAP, ELEVATION B
5P944E	1	14'-5"	BENT	CAP, ELEVATION B
5P945E	1	13'-4"	BENT	CAP, ELEVATION B
5P946E	1	11'-11"	BENT	CAP, ELEVATION B

BILL OF REINFORCEMENT FOR PIER 5				
BAR	NO.	LENGTH	SHAPE	LOCATION
5P947E	1	10'-10"	BENT	CAP, ELEVATION B
5P948E	1	9'-8"	BENT	CAP, ELEVATION B
5P949E	1	8'-6"	BENT	CAP, ELEVATION B
5P950E	1	7'-4"	BENT	CAP, ELEVATION B
5P951E	1	6'-4"	BENT	CAP, ELEVATION B
5P952E	1	4'-2"	BENT	CAP, ELEVATION B
5P953E	1	4'-2"	BENT	CAP, ELEVATION B
5P954E	1	3'-7"	BENT	CAP, ELEVATION B
5P955E	1	3'-3"	BENT	CAP, ELEVATION B
5P956E	1	20'-6"	BENT	CAP, ELEVATION C
5P957E	1	19'-4"	BENT	CAP, ELEVATION C
5P958E	1	18'-1"	BENT	CAP, ELEVATION C
5P959E	1	16'-10"	BENT	CAP, ELEVATION C
5P960E	1	15'-8"	BENT	CAP, ELEVATION C
5P961E	1	14'-4"	BENT	CAP, ELEVATION C
5P962E	1	13'-3"	BENT	CAP, ELEVATION C
5P963E	1	12'-1"	BENT	CAP, ELEVATION C
5P964E	1	10'-10"	BENT	CAP, ELEVATION C
5P965E	1	9'-7"	BENT	CAP, ELEVATION C
5P966E	1	8'-5"	BENT	CAP, ELEVATION C
5P967E	1	7'-3"	BENT	CAP, ELEVATION C
5P968E	1	6'-0"	BENT	CAP, ELEVATION C
5P969E	1	4'-9"	BENT	CAP, ELEVATION C
5P970E	1	3'-7"	BENT	CAP, ELEVATION C
5P971E	1	18'-1"	BENT	CAP, ELEVATION D
5P972E	1	16'-10"	BENT	CAP, ELEVATION D
5P973E	1	15'-8"	BENT	CAP, ELEVATION D
5P974E	1	14'-5"	BENT	CAP, ELEVATION D
5P975E	1	13'-2"	BENT	CAP, ELEVATION D
5P976E	1	12'-0"	BENT	CAP, ELEVATION D
5P977E	1	10'-9"	BENT	CAP, ELEVATION D
5P978E	1	9'-6"	BENT	CAP, ELEVATION D
5P979E	1	8'-4"	BENT	CAP, ELEVATION D
5P980E	1	7'-1"	BENT	CAP, ELEVATION D
5P981E	1	5'-10"	BENT	CAP, ELEVATION D
5P982E	1	4'-8"	BENT	CAP, ELEVATION D
5P983E	1	3'-5"	BENT	CAP, ELEVATION D
5P984E	1	2'-3"	BENT	CAP, ELEVATION D
5P985E	1	0'-11"	STR.	CAP, ELEVATION D
5P986E	1	16'-0"	STR.	CAP, ELEVATION D
5P987E	1	16'-3"	STR.	CAP, ELEVATION D
5P988E	1	16'-7"	STR.	CAP, ELEVATION D
5P989E	1	17'-1"	STR.	CAP, ELEVATION D
5P990E	1	17'-9"	STR.	CAP, ELEVATION D
5P991E	1	18'-7"	STR.	CAP, ELEVATION D
5P992E	1	17'-2"	STR.	CAP, ELEVATION D

BILL OF REINFORCEMENT FOR PIER 5				
BAR	NO.	LENGTH	SHAPE	LOCATION
5P993E	1	16'-9"	STR.	CAP, ELEVATION D
5P994E	1	16'-6"	STR.	CAP, ELEVATION D
5P995E	1	15'-0"	STR.	CAP, ELEVATION D
5P996E	1	4'-0"	STR.	CAP, ELEVATION D
5P997E	1	4'-0"	STR.	CAP, ELEVATION D
5P998E	1	4'-0"	STR.	CAP, ELEVATION D
5P999E	1	4'-0"	STR.	CAP, ELEVATION D
5P9100E	1	4'-0"	STR.	CAP, ELEVATION D
5P9101E	1	4'-0"	STR.	CAP, ELEVATION D
5P9102E	1	4'-0"	STR.	CAP, ELEVATION D

BILL OF REINFORCEMENT FOR PIER 6				
BAR	NO.	LENGTH	SHAPE	LOCATION
6P1101	32	23'-0"	BENT	FOOTING LONGITUDINAL, BOT.
6P1102	36	31'-0"	BENT	FOOTING TRANSVERSE, BOT.
6P1103	40	14'-11"	BENT	FOOTING DOWEL
6P604	22	31'-0"	BENT	FOOTING TRANSVERSE, TOP
6P605	30	23'-0"	BENT	FOOTING LONGITUDINAL, TOP
6P1006	40	25'-0.5"	STR.	FOOTING LONGITUDINAL, TOP
6P407	25	5'-10"	STR.	COLUMN, TIE
6P908	7	18'-2"	STR.	CAP LONGITUDINAL, BOT.
6P509	27	8'-4"	BENT	CAP TIE
6P410E	6	8'-4"	BENT	CAP TIE
6P1011E	14	18'-2"	STR.	CAP LONGITUDINAL, TOP

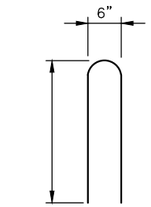

B515E

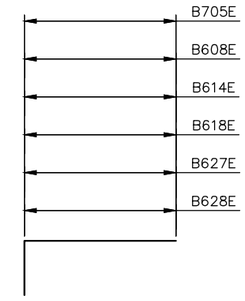

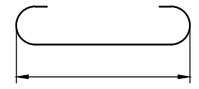

B702

NO.	DATE	BY	CHECK	DESIGN	REVISION / SUBMITTAL

DESIGNED BY: PDC CHECKED BY: SAD
DRAWN BY: JIK CHECKED BY: SAD

AECOM Kimley»Horn

90% SUBMISSION - 1/22/16

METROPOLITAN COUNCIL

SOUTHWEST Green Line LRT Extension

CIVIL- VOLUME 4G
LUCE LINE TRAIL BRIDGE
BRIDGE R0696
SUBSTRUCTURE REINFORCEMENT 2

DISCIPLINE: STRUCTURES
SHEET NAME: CBR0696-BRG-PIR-017

SHEET 38 OF 67

Jan, 15 2016 09:51 am V:\3400_ADC\CAD\SEGMENT E4\PLAN SHEETS\STRUCTURES\VNWHT-TRL\CBR0696-BRG-PIR-017.dwg By: Jim.Kimble

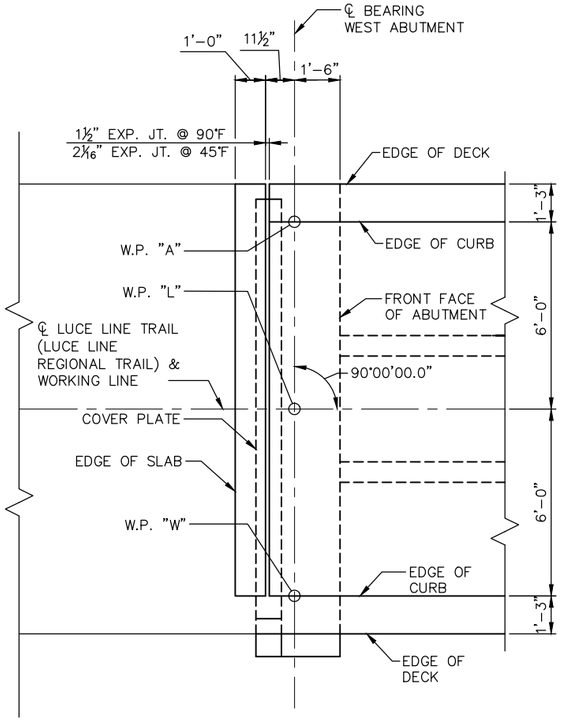

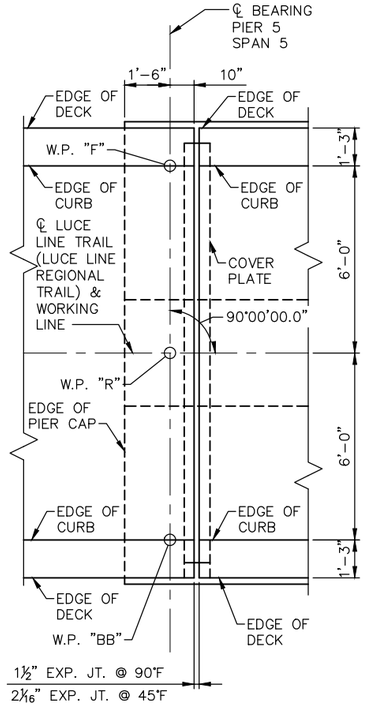

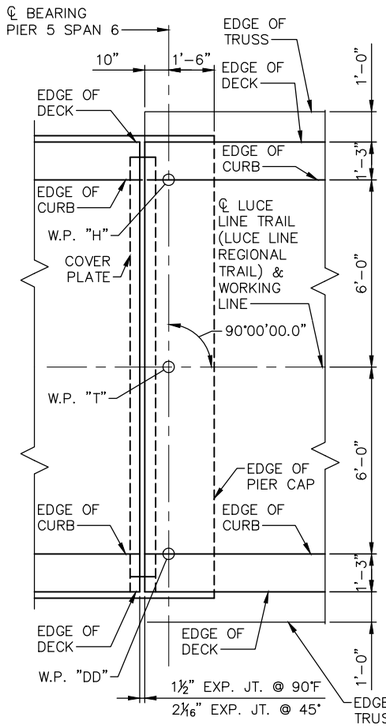

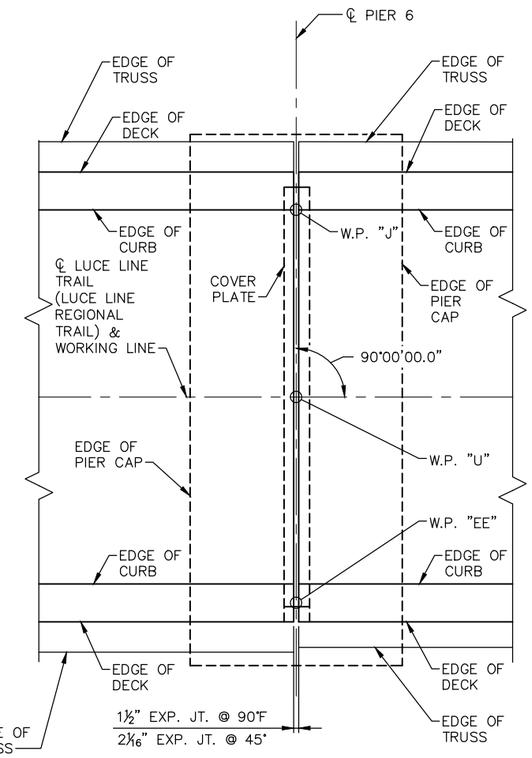

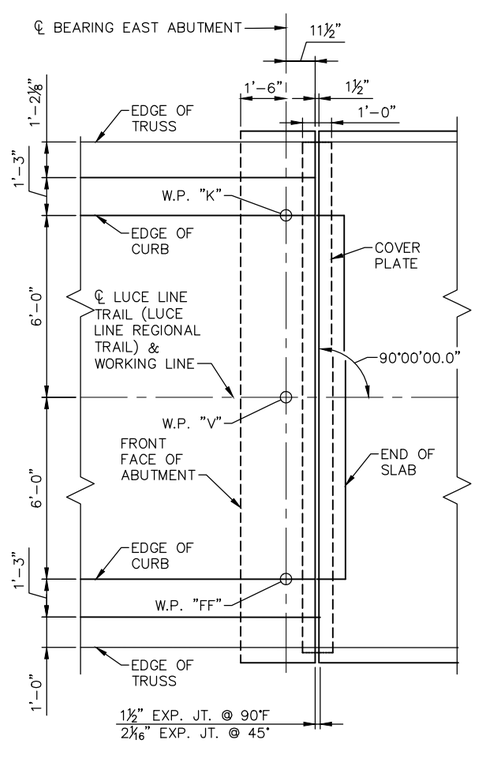

WEST ABUTMENT DETAIL

PIER 5 DETAIL

PIER 6 DETAIL

EAST ABUTMENT DETAIL

NO.	DATE	BY	CHECK	DESIGN	REVISION / SUBMITTAL

DESIGNED BY: PDC CHECKED BY: SAD
DRAWN BY: JIK CHECKED BY: SAD

AECOM Kimley»Horn

90% SUBMISSION - 1/22/16

METROPOLITAN COUNCIL

SOUTHWEST Green Line LRT Extension

CIVIL - VOLUME 4G
LUCE LINE TRAIL BRIDGE
BRIDGE R0696
CORNER DETAILS

DISCIPLINE: STRUCTURES

SHEET NAME: CBR0696-BRG-SUP-002

SHEET 39 OF 67

Jan, 15 2016 09:52 am V:\3400_ADC\CAD\SEGMENT E4\PLAN SHEETS\STRUCTURES\VNWHT-TRL\CBR0696-BRG-SUP-002.dwg By: Jim.Kimble

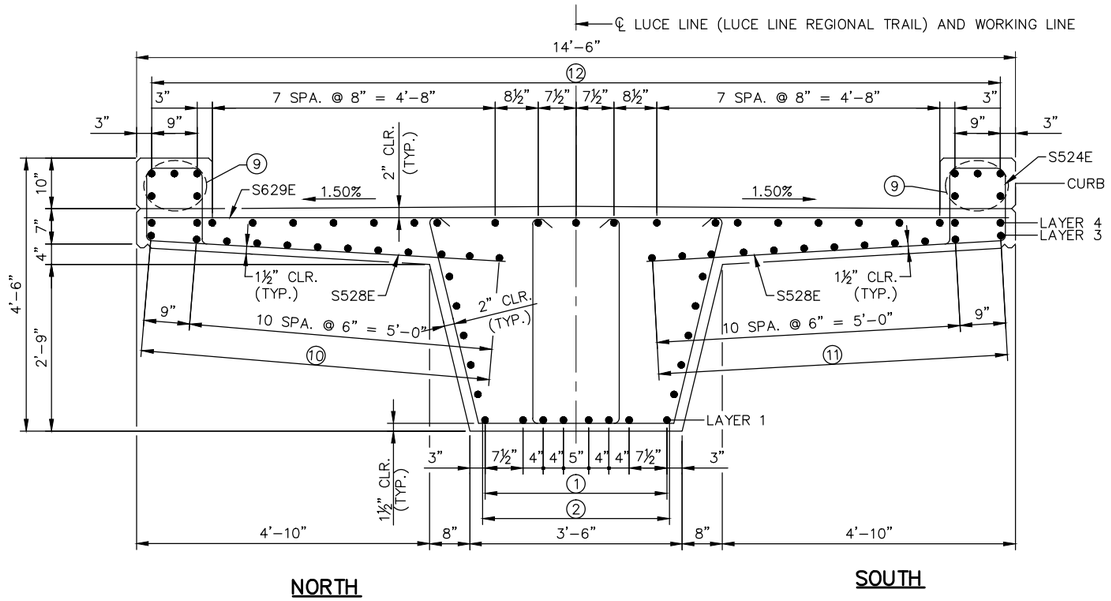

TYPICAL PIER SECTION

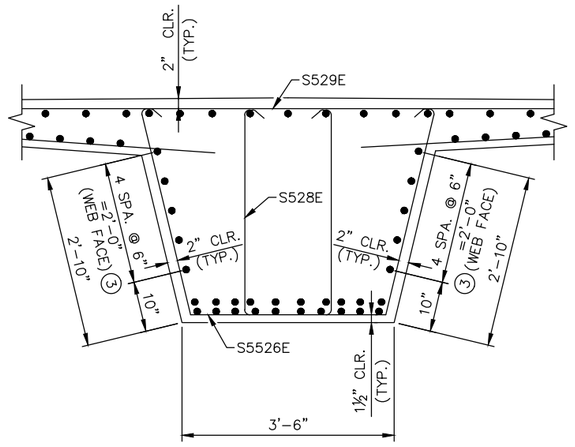

WEB SECTION

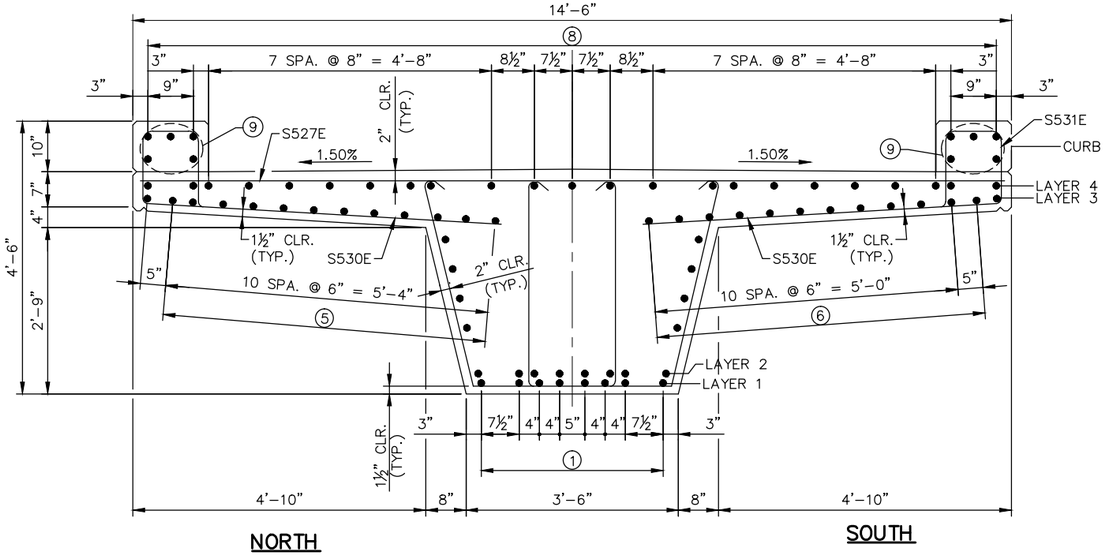

TYPICAL MIDSPAN SECTION

NOTES:

1. LAYER 1, S1001E AND S1002E
2. LAYER 2, S1001E AND S1002E
3. NORTH WEB FACE, S503E THROUGH S508E
4. SOUTH WEB FACE S503E THROUGH S508E
5. LAYER 3, S509E THROUGH S513E
6. LAYER 3, S509E THROUGH S513E
7. LAYER 1, S614E THROUGH S620E
8. LAYER 4, S509E THROUGH S513E
9. CURB, S531 THROUGH S536E
10. LAYER 3, S821E THROUGH S826E
11. LAYER 3, S821E THROUGH S826E
12. LAYER 4, S821E THROUGH S826E

NO.	DATE	BY	CHECK	DESIGN	REVISION / SUBMITTAL

DESIGNED BY: PDC CHECKED BY: SAD
DRAWN BY: JIK CHECKED BY: SAD

AECOM Kimley»Horn

90% SUBMISSION - 1/22/16

METROPOLITAN COUNCIL

SOUTHWEST Green Line LRT Extension

CIVIL - VOLUME 4G
LUCE LINE TRAIL BRIDGE
BRIDGE R0696
SUPERSTRUCTURE DETAILS 1

DISCIPLINE: STRUCTURES
SHEET NAME: CBR0696-BRG-SUP-003

SHEET 40 OF 67

Jan, 15 2016 09:52 am V:\3400_ADC\CAD\SEGMENT E4\PLAN SHEETS\STRUCTURES\VNWHT-TRL\CBR0696-BRG-SUP-003.dwg By: Jim.Kimble

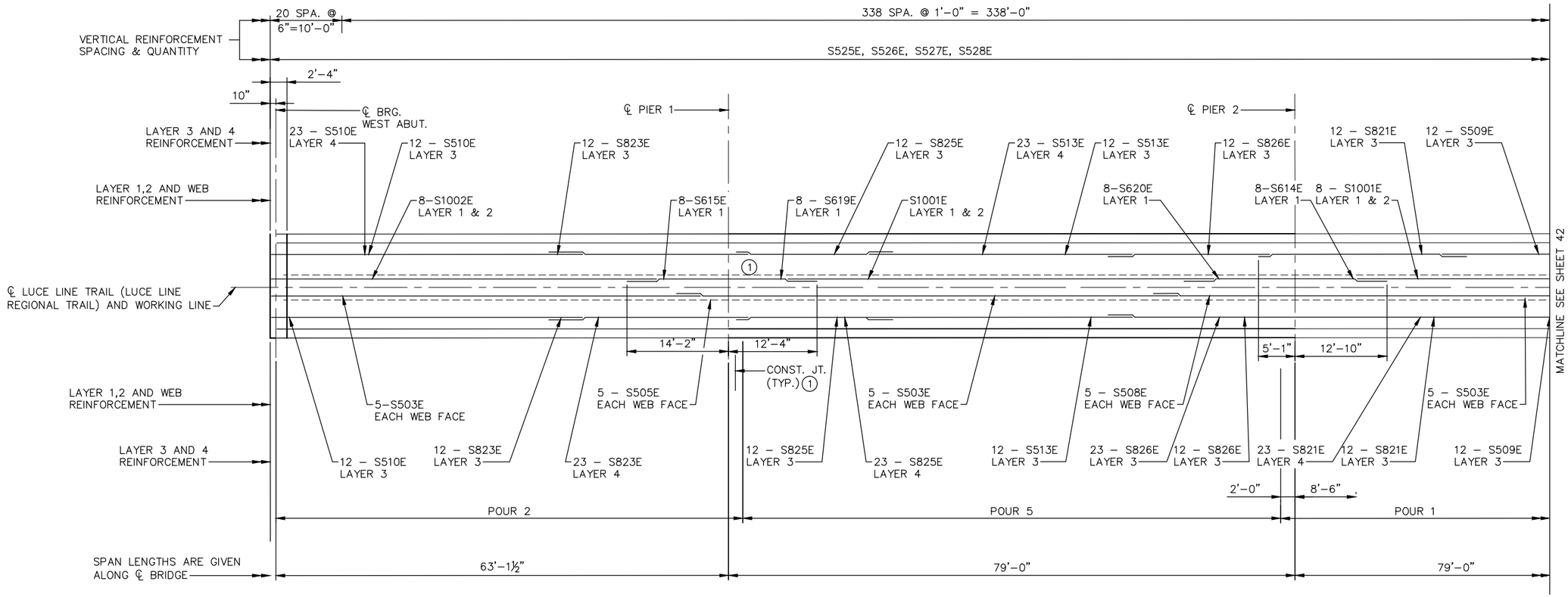

MINIMUM BAR LAP LENGTH	
BAR SIZE	MINIMUM LAP
#5	3'-8"
#6	4'-5"

UNIT 1 – SUPERSTRUCTURE REINFORCMENT

NOTES:

1. (1) USE MECHANICAL COUPLER TO SPLICE BARS.

   REFER TO STAGING SHEETS FOR ADDITIONAL STAGING NOTES AND REQUIREMENTS.

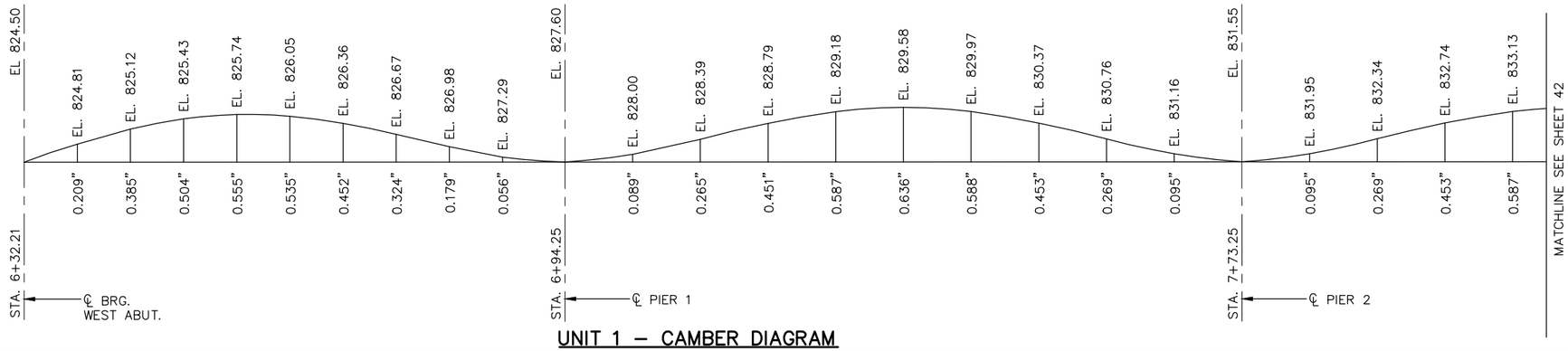

UNIT 1 – CAMBER DIAGRAM

NO.	DATE	BY	CHECK	DESIGN	REVISION / SUBMITTAL

DESIGNED BY: PDC | CHECKED BY: SAD
DRAWN BY: JIK | CHECKED BY: SAD

AECOM Kimley»Horn

90% SUBMISSION - 1/22/16

METROPOLITAN COUNCIL

SOUTHWEST Green Line LRT Extension

CIVIL - VOLUME 4G
LUCE LINE TRAIL BRIDGE
BRIDGE R0696
SUPERSTRUCTURE DETAILS 2

DISCIPLINE: STRUCTURES
SHEET NAME: CBR0696-BRG-SUP-004

SHEET 41 OF 67

Jan. 15 2016 09:52 am V:\3400_ADC\CAD\SEGMENT E4\PLAN SHEETS\STRUCTURES\VNWHT-TRL\CBR0696-BRG-SUP-004.dwg By: Jim.Kimble

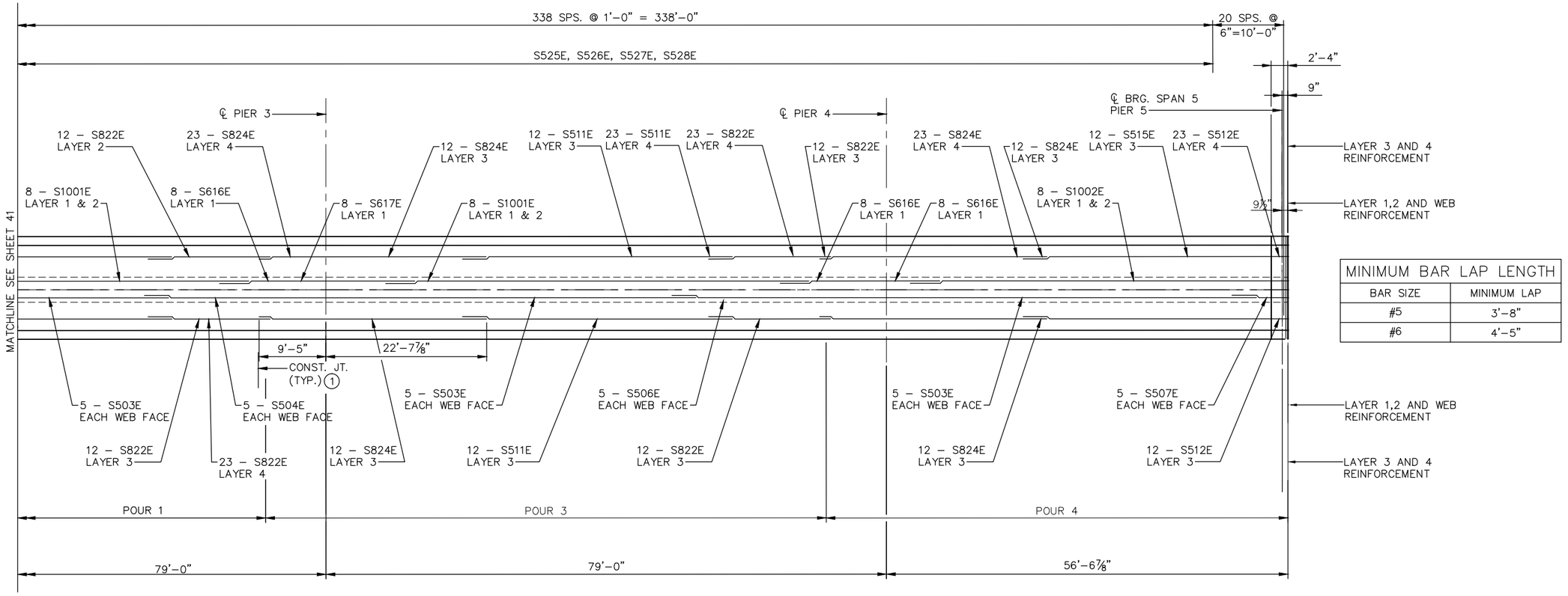

MINIMUM BAR LAP LENGTH

BAR SIZE	MINIMUM LAP
#5	3'–8"
#6	4'–5"

UNIT 1 – SUPERSTRUCTURE REINFORCMENT

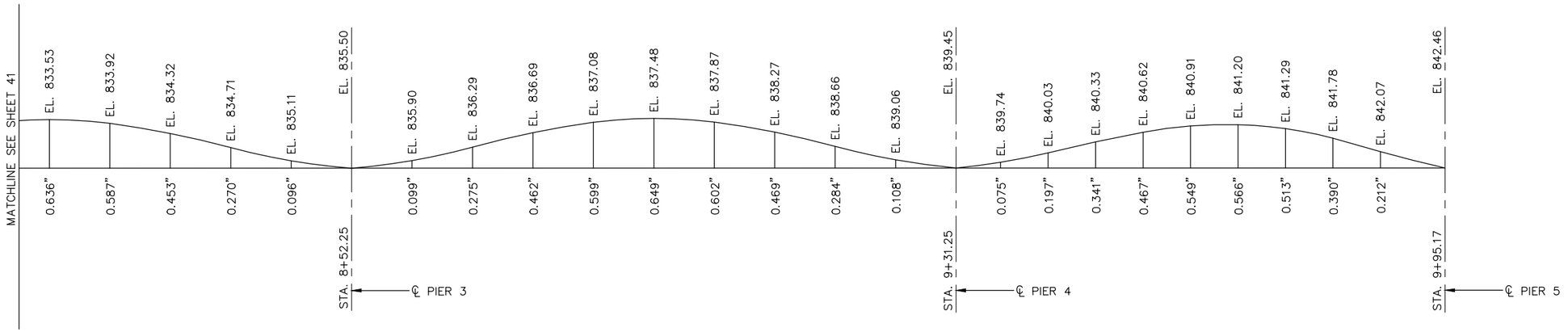

UNIT 1 – CAMBER DIAGRAM

NO.	DATE	BY	CHECK	DESIGN	REVISION / SUBMITTAL

DESIGNED BY: PDC | CHECKED BY: SAD
DRAWN BY: JIK | CHECKED BY: SAD

AECOM Kimley»Horn

90% SUBMISSION - 1/22/16

METROPOLITAN COUNCIL

SOUTHWEST Green Line LRT Extension

CIVIL - VOLUME 4G
LUCE LINE TRAIL BRIDGE
BRIDGE R0696
SUPERSTRUCTURE DETAILS 3

DISCIPLINE: STRUCTURES

SHEET NAME: CBR0696-BRG-SUP-005

SHEET 42 OF 67

Jan, 15 2016 09:53 am V:\3400_ADC\CAD\SEGMENT E4\PLAN SHEETS\STRUCTURES\WNWHT-TRL\CBR0696-BRG-SUP-005.dwg By: Jim.Kimble

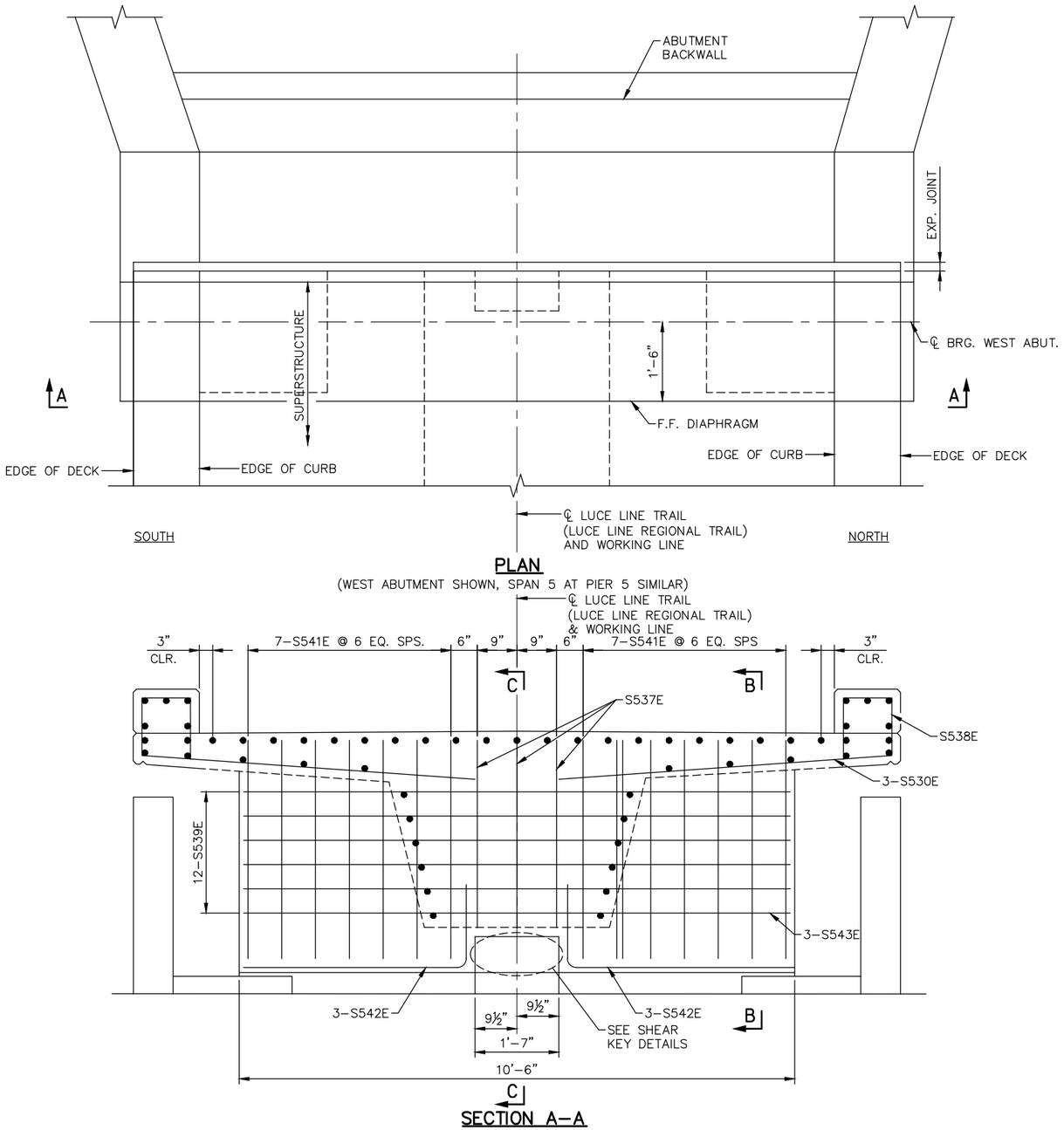

PLAN

(WEST ABUTMENT SHOWN, SPAN 5 AT PIER 5 SIMILAR)

SECTION A-A

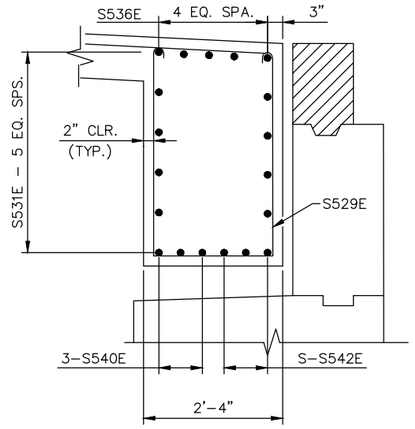

SECTION B-B

(BEARING ASSEMBLY AND PEDESTAL NOT SHOWN FOR CLARITY)

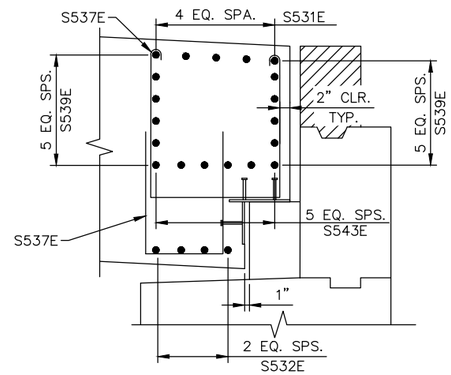

SECTION C-C

(BEARING ASSEMBLY AND PEDESTAL NOT SHOWN FOR CLARITY)

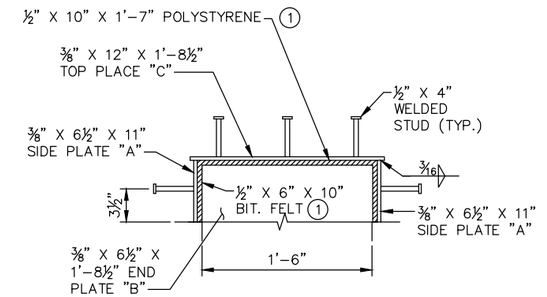

TRANSVERSE SECTION

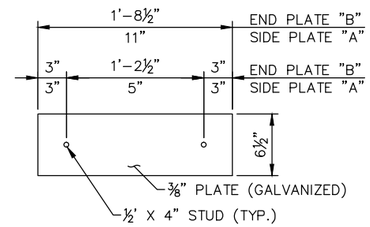

SIDE PLATE "A" & END PLATE "B"

(PLATE "A" - 4 REQ'D)
(PLATE "B" - 2 REQ'D)

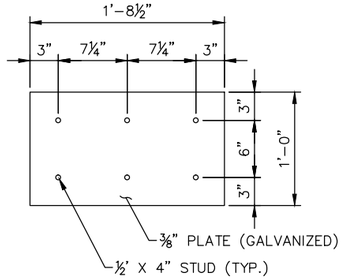

TOP PLATE "C"

(2 REQ'D)

SHEAR KEY DETAILS

① SECURE BITUMINOUS FELT AND POLYSTYRENE TO SHEAR KEY BY APPROVED ADHESIVE.

STRUCTURAL STEEL SHALL CONFORM TO SPEC. 3306.

NO.	DATE	BY	CHECK	DESIGN	REVISION / SUBMITTAL

DESIGNED BY: PDC | CHECKED BY: SAD
DRAWN BY: JIK | CHECKED BY: SAD

AECOM Kimley»Horn

90% SUBMISSION - 1/22/16

METROPOLITAN COUNCIL

SOUTHWEST Green Line LRT Extension

CIVIL - VOLUME 4G
LUCE LINE TRAIL BRIDGE
BRIDGE R0696
END DIAPHRAGM DETAILS

DISCIPLINE: STRUCTURES

SHEET NAME: CBR0696-BRG-DTL-001

SHEET 43 OF 67

Jan. 15 2016 09:53 am V:\3400_ADC\CAD\SEGMENT E4\PLAN SHEETS\STRUCTURES\WNWHT-TRL\CBR0696-BRG-DTL-001.dwg By: Jim.Kimble

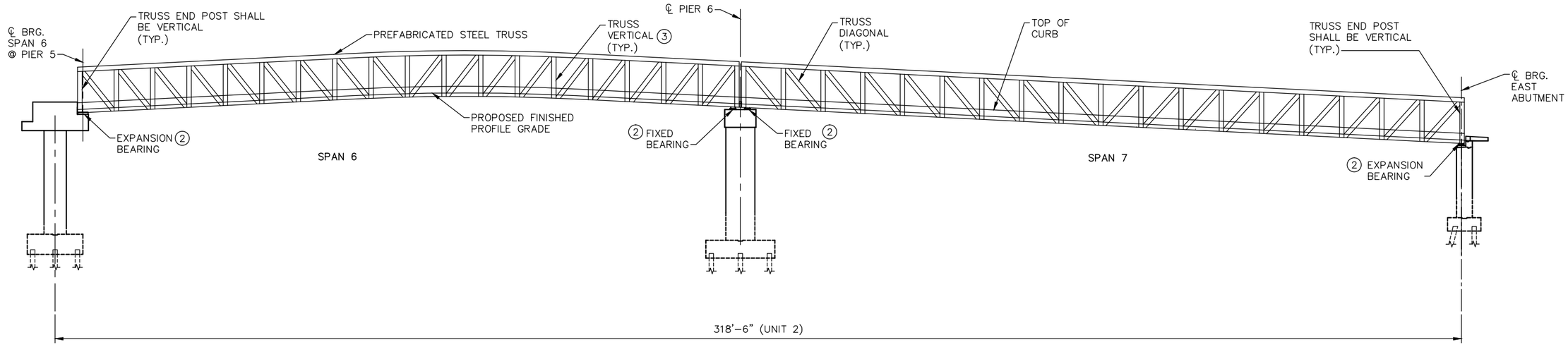

PREFABRICATED TRUSS ELEVATION

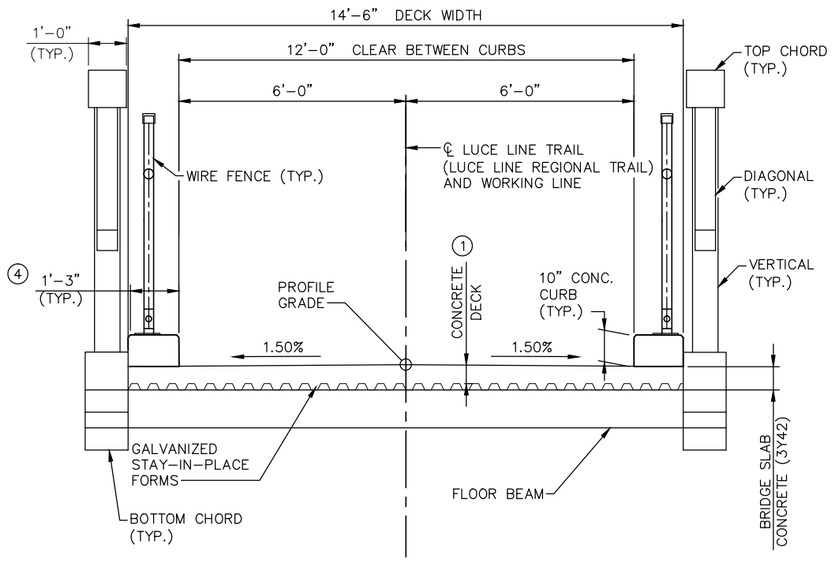

NOTES:

TRUSS MEMBERS AND RAILING SHALL BE FABRICATED FROM HIGH STRENGTH, LOW ALLOY, ENHANCED ATMOSPHERIC CORROSION RESISTANT ASTM A847 COLD–FORMED WELDED SQUARE AND RECTANGULAR TUBING OR PIPE AND MISCELLANEOUS PARTS SHALL BE FABRICATED FROM ASTM A588, ASTM A606, OR ASTM A242 PLATE, BAR AND STRUCTURAL SHAPES (Fy=50,000 PSI).

MAXIMUM TRUSS BEARING LOADS SHOWN IN THE TABLE WERE ASSUMED BASED ON PRE–BID COORDINATION WITH PREFABRICATED STEEL TRUSS MANUFACTURERS. UNFACTORED LOADS ARE SHOWN.

DESIGN SHALL BE IN ACCORDANCE WITH 2014 AND 2015T INTERIM AASHTO LRFD BRIDGE DESIGN SPECIFICATIONS AND 2009 AND 2014 INTERIMS LRFD GUIDE SPECIFICATIONS FOR THE DESIGN OF PEDESTRIAN BRIDGES.

STRUCTURAL STEEL SHALL BE PAINTED.....

ALL STRUCTURAL TUBING SHALL BE DESIGNED SO THAT MOISTURE IS NOT TRAPPED IN TUBES, SUCH AS MIN. ⅜" WEEP HOLES AT BOTH ENDS OF TUBES.

ANCHOR ROD DESIGN & DETERMINATION OF LOCATIONS AT THE PIERS WILL BE DETERMINED BY THE PREFABRICATED STEEL TRUSS MANUFACTURER AND CONTRACTOR SHALL COORDINATE REINFORCEMENT PLACEMENT/ADJUSTMENT IN PIER CAPS AS APPROVED BY ENGINEER IN FIELD.

BEARINGS AT PIER 6 SHALL BE FIXED AND BEARINGS AT PIER 5 AND EAST ABUTMENT SHALL BE EXPANSION.

ANCHOR RODS FOR THE TRUSS SHALL COMPLY WITH SPEC. 3385 TYPE C, AND GALVANIZED PER SPEC. 3392.

HARDWARE SHALL BE GALVANIZED PER SPEC 3392, AND STRUCTURAL BOLTS SHALL MEET ASTM A325, TYPE 1, MECHANICALLY GALVANIZED.

THE TRUSS SHALL FOLLOW THE GRADE OF THE PROFILE.

(1) PREFABRICATED STEEL TRUSS MANUFACTURER SHALL DESIGN THE CONCRETE DECK ON THE PREFABRICATED STEEL TRUSS AND TRANSVERSE AND LONGITUDINAL DECK REINFORCEMENT. THE DECK REINFORCING, (5) NO. 4 LONGITUDINAL CURB REINFORCEMENT BAR PER CURB, AND NO. 4 BENT TIES IN EACH CURB TO MATCH TRANSVERSE DECK BAR SPACING FOR THE CONCRETE DECK ON THE PREFABRICATED STEEL TRUSS SHALL BE FURNISHED AND INSTALLED BY THE CONTRACTOR.

(2) SEE ABUTMENT AND PIER DETAILS SHEETS FOR BEARING SEAT ELEVATIONS. THESE ELEVATIONS SHOULD BE VERIFIED BY THE CONTRACTOR.

(3) TRUSS VERTICALS SHALL BE UNIFORMLY SPACED ALONG LENGTH OF BRIDGE WITH A MAXIMUM SPACING OF 8'–0".

(4) MAINTAIN 1'–3" WIDE CONCRETE CURB FULL LENGTH OF TRUSS INCLUDING AT END POSTS.

BRIDGE REACTIONS USED FOR SUBSTRUCTURE DESIGN

COMBINE REACTIONS AS PER 2014 AND 2015 INTERIM AASHTO LRFD BRIDGE DESIGN SPECIFICATIONS AND 2009 AND 2014 INERIMLRFD GUIDE SPECIFICATIONS FOR THE DESIGN OF PEDESTRIAN BRIDGES.

REACTIONS ARE NOT TO BE EXCEEDED WITHOUT APPROVAL BY THE ENGINEER SEALING THESE BRIDGE PLANS. LOADS ARE UNFACTORED.

SPAN 6			
LOAD	P (LBS)	H (LBS)	L (LBS)
DEAD	65,825		
UNIFORM LIVE	48,725		
VEHICLE LIVE	10,000		
WIND UPLIFT (20 psf)	-18,565		
WIND	± 17,975	35,190	
THERMAL			9,875

SPAN 7			
LOAD	P (LBS)	H (LBS)	L (LBS)
DEAD	83,075		
UNIFORM LIVE	51,585		
VEHICLE LIVE	10,000		
WIND UPLIFT (20 psf)	-19,650		
WIND	± 19,195	37,255	
THERMAL			6,255

"P" – VERTICAL LOAD EACH BASE PLATE (4 PER SPANS 6&7) + DOWNWARD LOAD
"H" – HORIZONTAL LOAD EACH PIER (2 PER SPANS 6&7) – UPWARD LOAD
"L" – LONGITUDINAL LOAD EACH BASE PLATE (4 PER SPAN 6&7)

NO.	DATE	BY	CHECK	DESIGN	REVISION / SUBMITTAL

DESIGNED BY: PDC CHECKED BY: SAD
DRAWN BY: JIK CHECKED BY: SAD

AECOM Kimley»Horn

90% SUBMISSION - 1/22/16

METROPOLITAN COUNCIL

SOUTHWEST Green Line LRT Extension

CIVIL - VOLUME 4G
LUCE LINE TRAIL BRIDGE
BRIDGE R0696
PREFABRICATED TRUSS

DISCIPLINE: STRUCTURES

SHEET NAME: CBR0696-BRG-SUP-006

SHEET 44 OF 67

Jan, 15 2016 09:54 am V:\3400_ADC\CAD\SEGMENT E4\PLAN SHEETS\STRUCTURES\VNWHT-TRL\CBR0696-BRG-SUP-006.dwg By: Jim.Kimble

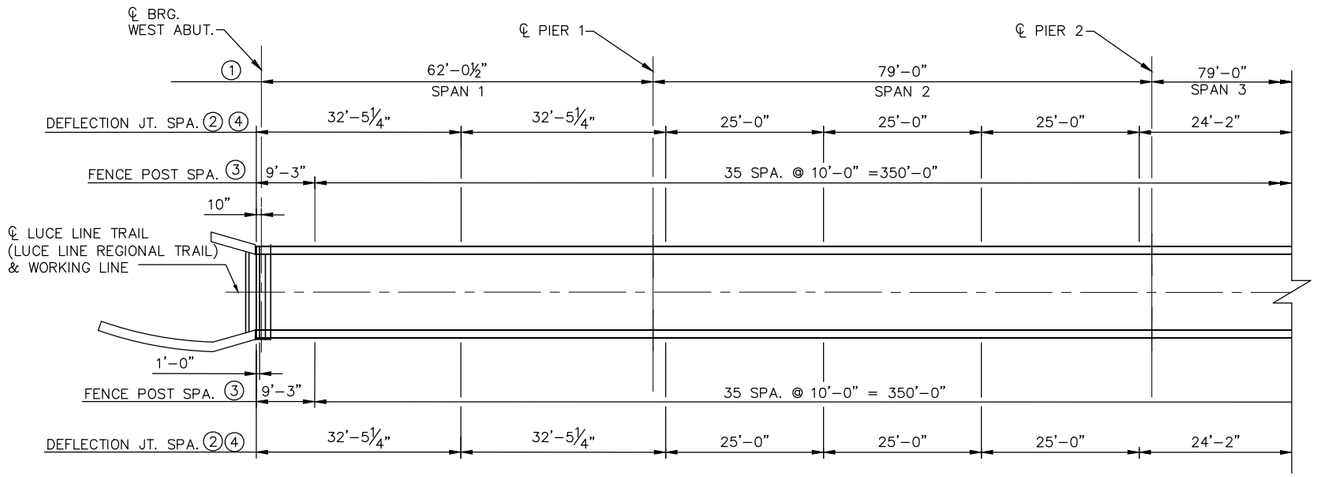

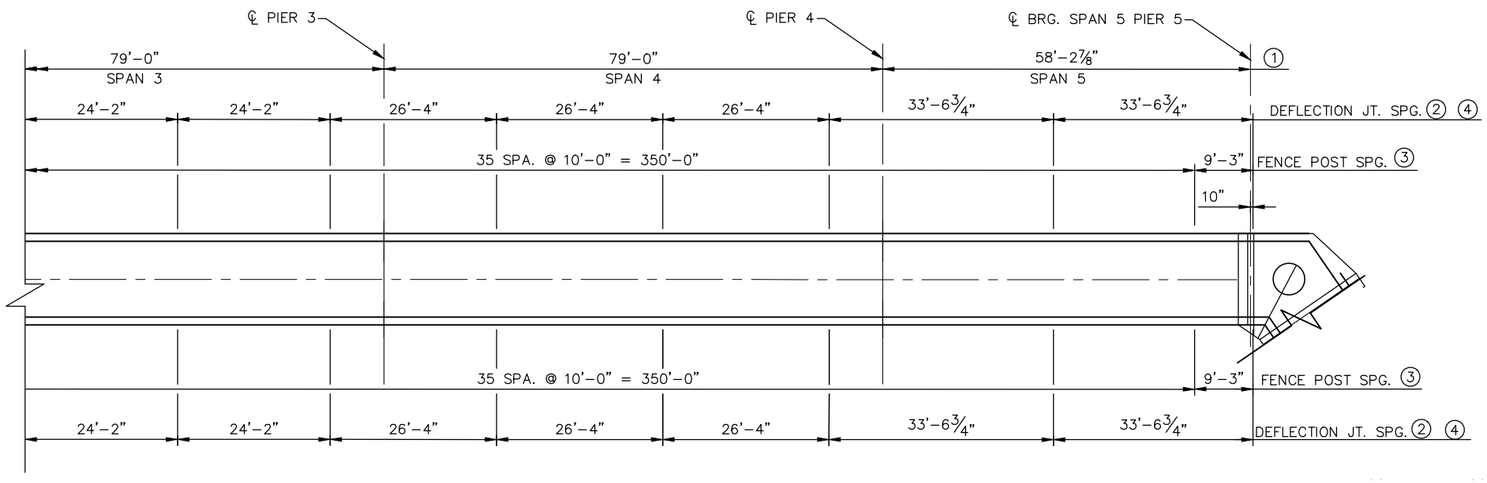

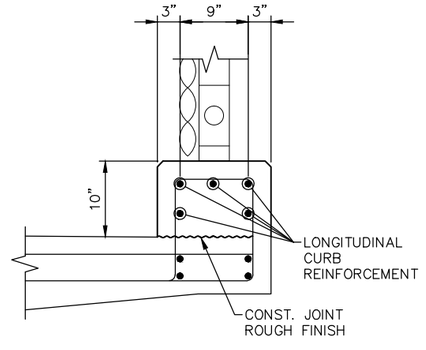

TYPICAL CURB SECTION

NOTES:

1. MEASURED ALONG CENTERLINE OF LUCE LINE TRAIL.
2. MEASURED ALONG INSIDE FACE OF CURB.
3. MEASURED ALONG CENTERLINE OF RAILING.
4. BREAK BOND AT JOINT IN CURB BY APPROVED METHOD. NO REINFORCEMENT THROUGH JOINT.
5. FINISH TOP OF ALL CURB JOINTS WITH ¼" EDGE AND VERTICAL EDGES WITH ½" V STRIPS.

NO.	DATE	BY	CHECK	DESIGN	REVISION / SUBMITTAL

DESIGNED BY: PDC CHECKED BY: SAD
DRAWN BY: JIK CHECKED BY: SAD

AECOM Kimley»Horn

90% SUBMISSION - 1/22/16

METROPOLITAN COUNCIL

SOUTHWEST Green Line LRT Extension

CIVIL - VOLUME 4G
LUCE LINE TRAIL BRIDGE
BRIDGE R0696
CURB DETAILS 1

DISCIPLINE: STRUCTURES
SHEET NAME: CBR0696-BRG-DTL-002

SHEET 45 OF 67

Jan, 15 2016 09:54 am v:\3400_ADC\CAD\SEGMENT E4\PLAN SHEETS\STRUCTURES\WNWHT-TRL\CBR0696-BRG-DTL-002.dwg By: Jim.Kimble

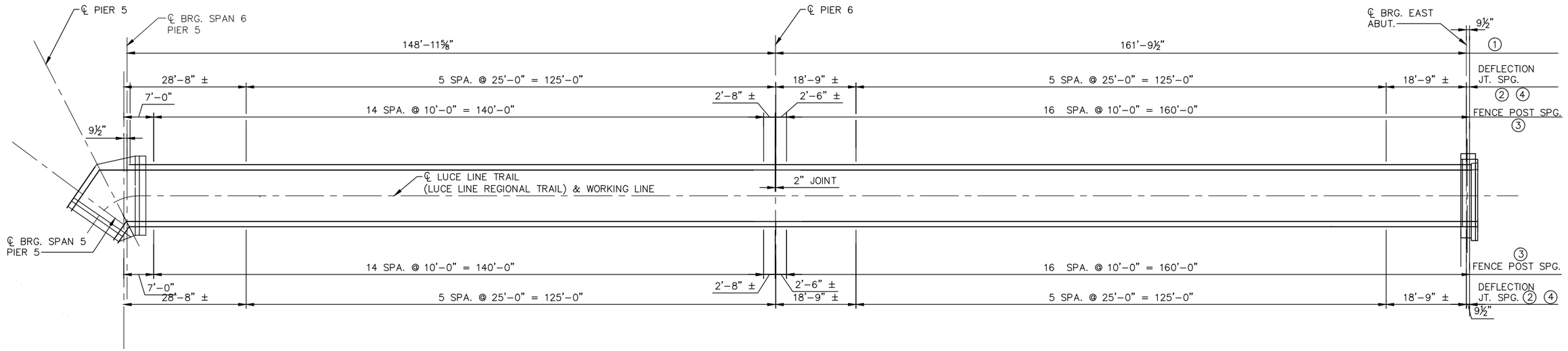

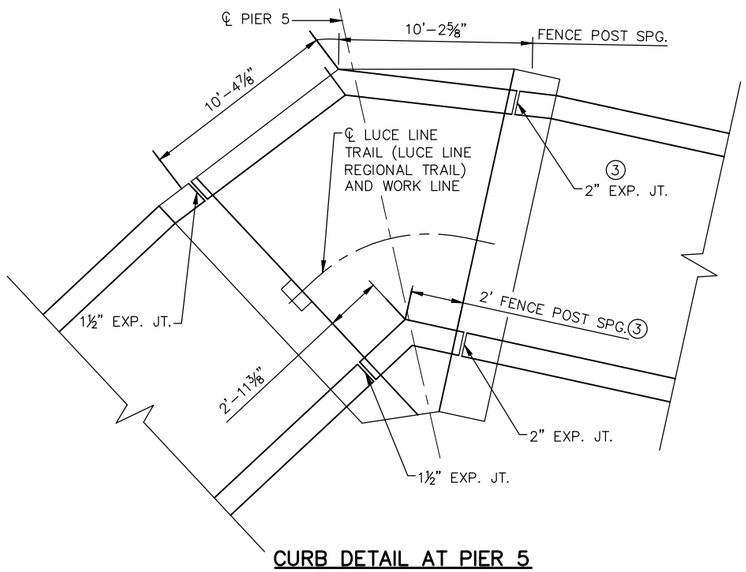

CURB DETAIL AT PIER 5

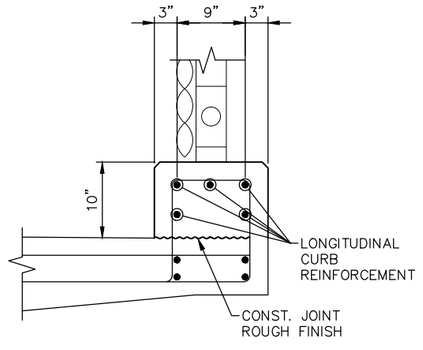

TYPICAL CURB SECTION

NOTES:

1. MEASURED ALONG CENTERLINE OF LUCE LINE TRAIL.
2. MEASURED ALONG INSIDE FACE OF CURB.
3. MEASURED ALONG CENTERLINE OF FENCE.
4. BREAK BOND AT JOINT IN CURB BY APPROVED METHOD. NO REINFORCEMENT THROUGH JOINT.
5. FINISH TOP OF ALL CURB JOINTS WITH ¼" EDGE AND VERTICAL EDGES WITH ½" V STRIPS.

NO.	DATE	BY	CHECK	DESIGN	REVISION / SUBMITTAL

DESIGNED BY: PDC CHECKED BY: SAD
DRAWN BY: JIK CHECKED BY: SAD

AECOM Kimley»Horn

90% SUBMISSION - 1/22/16

METROPOLITAN COUNCIL

SOUTHWEST Green Line LRT Extension

CIVIL - VOLUME 4G
LUCE LINE TRAIL BRIDGE
BRIDGE R0696
CURB DETAILS 2

DISCIPLINE: STRUCTURES

SHEET NAME: CBR0696-BRG-DTL-003

SHEET 46 OF 67

Jan, 15 2016 09:54 am V:\3400_ADC\CAD\SEGMENT E4\PLAN SHEETS\STRUCTURES\WWHT-TRL\CBR0696-BRG-DTL-003.dwg By: Jim.Kimble

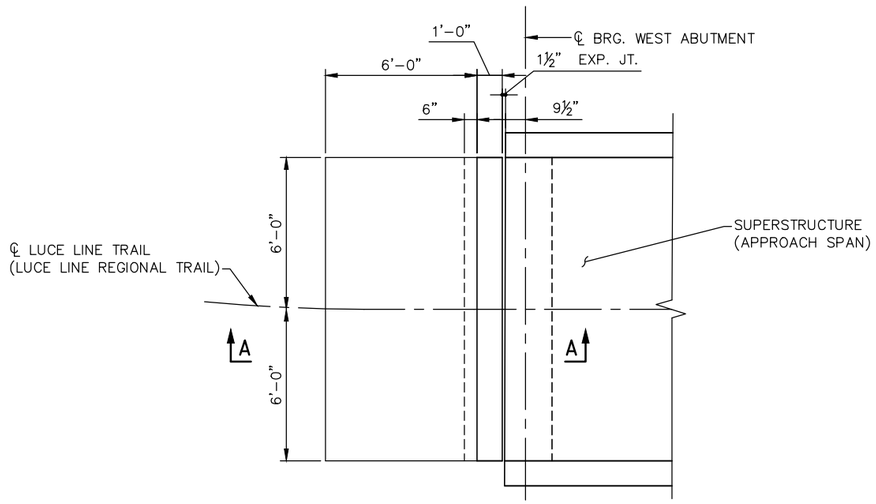

WEST APPROACH PANEL

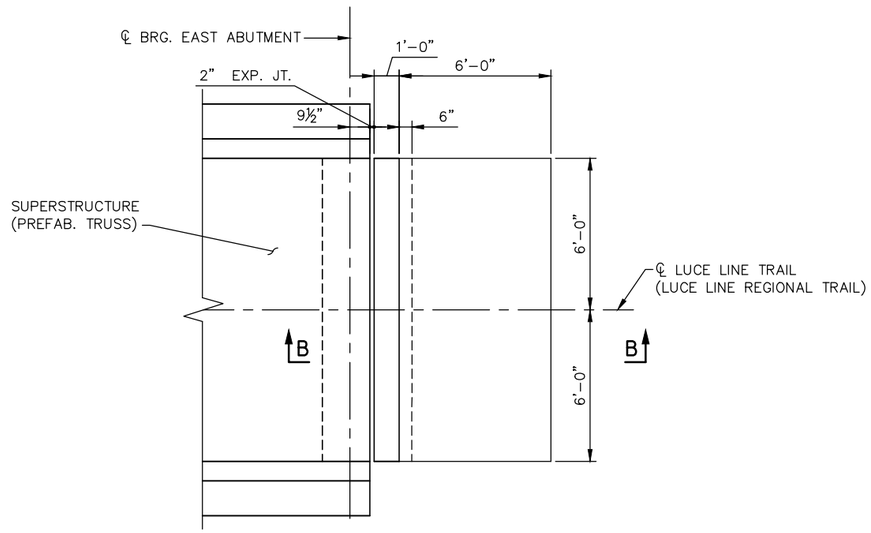

EAST APPROACH PANEL

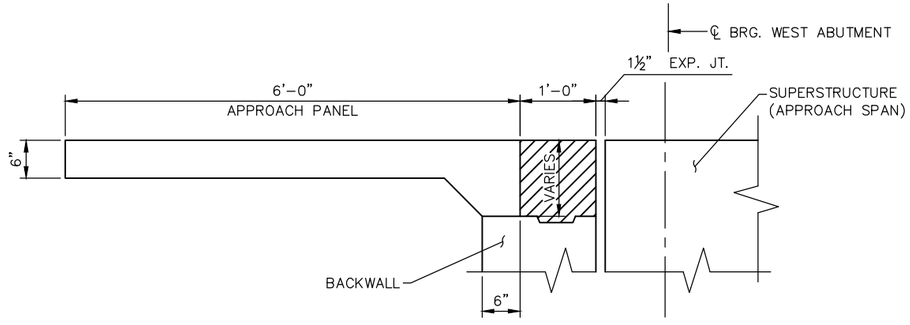

SECTION A–A

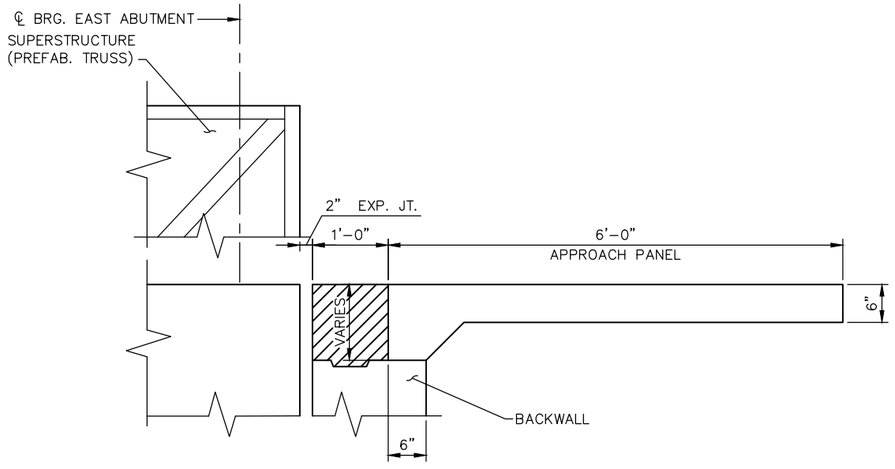

SECTION B–B

NO.	DATE	BY	CHECK	DESIGN	REVISION / SUBMITTAL

DESIGNED BY: PDC CHECKED BY: SAD
DRAWN BY: JIK CHECKED BY: SAD

AECOM Kimley»Horn

90% SUBMISSION - 1/22/16

METROPOLITAN COUNCIL

SOUTHWEST Green Line LRT Extension

CIVIL - VOLUME 4G
LUCE LINE TRAIL BRIDGE
BRIDGE R0696
APPROACH PANEL DETAILS

DISCIPLINE: STRUCTURES

SHEET NAME: CBR0696-BRG-DTL-004

SHEET 47 OF 67

Jan, 15 2016 09:55 am V:\3400_ADC\CAD\SEGMENT E4\PLAN SHEETS\STRUCTURES\WWHT-TRL\CBR0696-BRG-DTL-004.dwg By: Jim.Kimble

BILL OF REINFORCEMENT FOR SUPERSTRUCTURE

BAR	NO.	LENGTH	SHAPE	LOCATION
S1001E	48.000	60'-0"	STR.	LAYER 1 LONGITUDINAL, BOT.
S1002E	32.000	54'-0"	STR.	LAYER 1 LONGITUDINAL, BOT.
S503E	50.000	60'-0"	STR.	NORTH AND SOUTH WEB FACE
S504E	10.000	18'-0"	STR.	NORTH AND SOUTH WEB FACE
S505E	10.000	10'-4"	STR.	NORTH AND SOUTH WEB FACE
S506E	10.000	22'-8"	STR.	NORTH AND SOUTH WEB FACE
S507E	10.000	8'-8"	STR.	NORTH AND SOUTH WEB FACE
S508E	10.000	16'-6"	STR.	NORTH AND SOUTH WEB FACE
S509E	47.000	37'-4"	STR.	LAYER 3 AND LAYER 4, LONGITUDINAL, TOP
S510E	47.000	43'-8"	STR.	LAYER 3 AND LAYER 4, LONGITUDINAL, TOP
S511E	47.000	38'-4"	STR.	LAYER 3 AND LAYER 4, LONGITUDINAL, TOP
S512E	47.000	38'-1.125"	STR.	LAYER 3 AND LAYER 4, LONGITUDINAL, TOP
S513E	47.000	37'-4"	STR.	LAYER 3 AND LAYER 4, LONGITUDINAL, TOP
S614E	8.000	17'-11"	STR.	LAYER 1 LONGITUDINAL, BOT.
S615E	8.000	17'-1"	STR.	LAYER 1 LONGITUDINAL, BOT.
S616E	8.000	7'-5"	STR.	LAYER 1 LONGITUDINAL, BOT.
S617E	8.000	20'-5"	STR.	LAYER 1 LONGITUDINAL, BOT.
S618E	8.000	15'-5"	STR.	LAYER 1 LONGITUDINAL, BOT.
S619E	8.000	9'-5"	STR.	LAYER 1 LONGITUDINAL, BOT.
S620E	8.000	10'-5"	STR.	LAYER 1 LONGITUDINAL, BOT.
S821E	47.000	29'-0"	STR.	LAYER 3 AND LAYER 4, LONGITUDINAL, TOP
S822E	47.000	17'-6"	STR.	LAYER 3 AND LAYER 4, LONGITUDINAL, TOP
S823E	47.000	28'-0"	STR.	LAYER 3 AND LAYER 4, LONGITUDINAL, TOP
S824E	47.000	32'-4"	STR.	LAYER 3 AND LAYER 4, LONGITUDINAL, TOP
S825E	47.000	21'-10"	STR.	LAYER 3 AND LAYER 4, LONGITUDINAL, TOP
S826E	47.000	22'-10"	STR.	LAYER 3 AND LAYER 4, LONGITUDINAL, TOP
S527E	357.000	10'-11"	BENT	VERTICAL REINFORCEMENT
S528E	357.000	8'-9.5"	BENT	VERTICAL REINFORCEMENT
S629E	356.000	14'-0"	STR.	TRANSVERSE, TOP
S630E	712.000	5'-10"	STR.	TRANSVERSE NORTH AND SOUTH, TOP
S531E	20.000	32'-5"	STR.	CURB, LONGITUDINAL
S532E	30.000	25'-0"	STR.	CURB, LONGITUDINAL
S533E	30.000	24'-2"	STR.	CURB, LONGITUDINAL
S534E	30.000	26'-4"	STR.	CURB, LONGITUDINAL
S535E	20.000	33'-7"	STR.	CURB, LONGITUDINAL
S536E	10.000	24'-8"	STR.	CURB, LONGITUDINAL
S537E	20.000	18'-5"	STR.	CURB, LONGITUDINAL
S538E	357.000	4'-9.5"	STR.	CURB, STIRRUP
S539E	12.000	9'-8"	STR.	END DIAPHRAGM, E.F.
S540E	6.000	4'-6"	STR.	END DIAPHRAGM, E.F.

BILL OF REINFORCEMENT FOR SUPERSTRUCTURE

BAR	NO.	LENGTH	SHAPE	LOCATION
S541E	36.000	8'-9"	BENT	END DIAPHRAGM, E.F.
S542E	12.000	4'-3"	BENT	END DIAPHRAGM, E.F.
0.000	0.000	'-"	0.000	0.000

BILL OF REINFORCEMENT FOR APPROACH PANEL

BAR	NO.	LENGTH	SHAPE	LOCATION
AP601E	1.000	10'-0"	STR.	LONGITUDINAL, BOT.
AP402E	0.000	'-"	STR.	LONGITUDINAL, TOP
AP503E	0.000	'-"	STR.	TRANSVERSE, TOP
AP404E	0.000	'-"	STR.	TRANSVERSE, BOT.
AP05E	0.000	'-"	0.000	0.000
AP06E	0.000	'-"	0.000	0.000
AP07E	0.000	'-"	0.000	0.000
AP08E	0.000	'-"	0.000	0.000
AP09E	0.000	'-"	0.000	0.000
AP10E	0.000	'-"	0.000	0.000

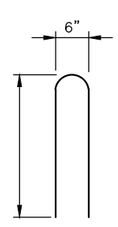

B515E

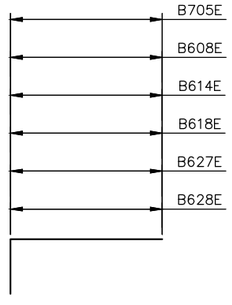

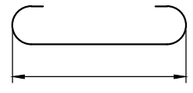

B702

NO.	DATE	BY	CHECK	DESIGN	REVISION / SUBMITTAL

DESIGNED BY: PDC CHECKED BY: SAD
DRAWN BY: JIK CHECKED BY: SAD

AECOM Kimley»Horn

90% SUBMISSION - 1/22/16

METROPOLITAN COUNCIL

SOUTHWEST Green Line LRT Extension

CIVIL - VOLUME 4G
LUCE LINE TRAIL BRIDGE
BRIDGE R0696
SUPERSTRUCTURE REINFORCEMENT

DISCIPLINE: STRUCTURES
SHEET NAME: CBR0696-BRG-DTL-005

SHEET 48 OF 67

Jan, 15 2016 09:55 am V:\3400_ADC\CAD\SEGMENT E4\PLAN SHEETS\STRUCTURES\VNWHT-TRL\CBR0696-BRG-DTL-005.dwg By: Jim.Kimble

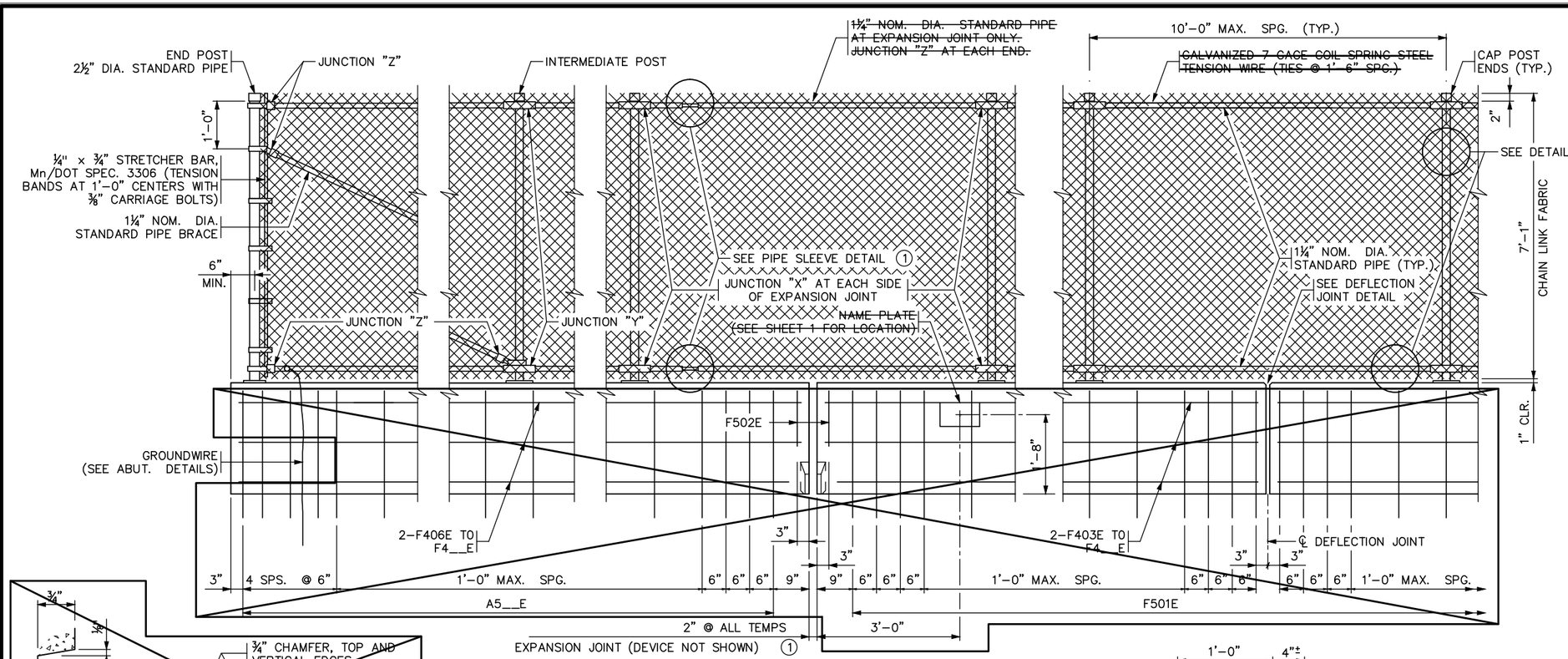

Ⓐ INSIDE ELEVATION OF RAILING

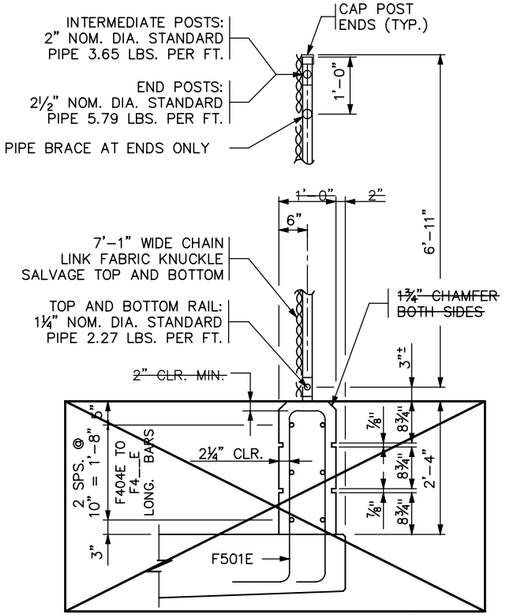

Ⓐ TYPICAL SECTION THROUGH FENCE

INTERMEDIATE POST SHOWN

SHEET MODIFICATION:
Ⓐ DENOTES MODIFICATION TO STANDARD SHEET

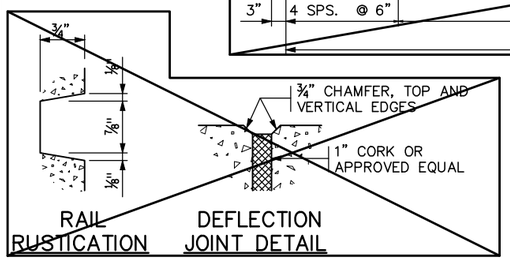

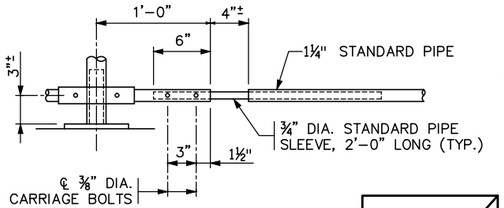

PIPE SLEEVE DETAIL (1)

GENERAL NOTES

Ⓐ ~~SEE CONCRETE PARAPET TYPE P-1 SHEET FOR PARAPET DIMENSIONS, REINFORCEMENT AND NOTES.~~

~~LENGTH OF "TYPE P-1 RAILING CONCRETE (3Y46 OR 3Y46A)" FOR PAYMENT SHALL BE MEASURED BETWEEN THE OUTSIDE FACES OF THE CONCRETE RAIL.~~

~~LENGTH OF "WIRE FENCE DESIGN W-1" FOR PAYMENT SHALL BE MEASURED BETWEEN THE CENTERS OF END RAILPOSTS. SEE SHEET 28.~~

~~CONCRETE RAILING = 350 LBS./FT. (0.086 CU. YDS./FT.)~~

FOR FENCE POST ANCHORAGES SEE SHEET 28.

~~MAXIMUM SPACING OF DEFLECTION JOINTS SHALL BE 20 FT. FOR SPACING OF FENCE POST, JOINTS AND ELECTRICAL GROUNDS, SEE SUPERSTRUCTURE SHEETS.~~

FENCE POSTS AND FENCE POST ANCHORAGES SHALL BE SET VERTICAL, UNLESS OTHERWISE NOTED.

℄ OF FENCE POST ANCHORAGE SHALL BE A MINIMUM OF 6" FROM JOINTS.

END POSTS AND BRACING SHALL BE AT 500 FT. MAXIMUM INTERVALS.

~~ALL POSTS SHALL HAVE A MEANS TO SECURELY HOLD THE TOP TENSION WIRE IN POSITION AND ALLOW FOR THE REMOVAL AND REPLACEMENT OF A POST WITHOUT DAMAGING THE TOP WIRE.~~

WIRE TIES MAY BE 9 GAGE GALVANIZED STEEL OR 0.179" MIN. ALUMINUM ALLOY CONFORMING TO A.S.T.M. B211, ALLOY 1100-H18. ~~USE 12½ GAGE GALVANIZED HOG RINGS FOR TENSION WIRE TIES.~~

~~ALL MATERIAL IN THE CONCRETE BASE AND END POST IS INCLUDED IN THE SUPERSTRUCTURE QUANTITIES.~~

SEE SPECIAL PROVISIONS FOR REQUIREMENTS NOT INCLUDED ON THIS SHEET. ~~AND FOR BASIS OF PAYMENT.~~

(1) PROVIDE PIPE SLEEVE IN SPAN BETWEEN THE VERTICAL POSTS AT EXPANSION JOINT. SEE SUPERSTRUCTURE SHEETS FOR LOCATION.

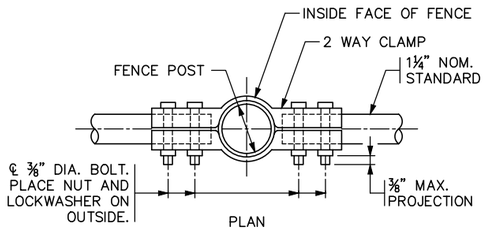

2 WAY CLAMP BENDING TABLE	
GRADE OF FENCE	Ø
0° TO 2°	0°
2° TO 6°	4°
6° TO 10°	8°

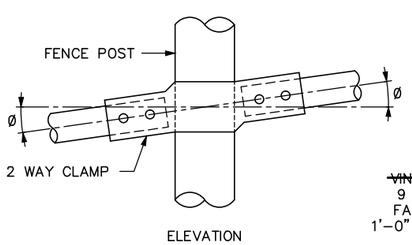

JUNCTION "X"

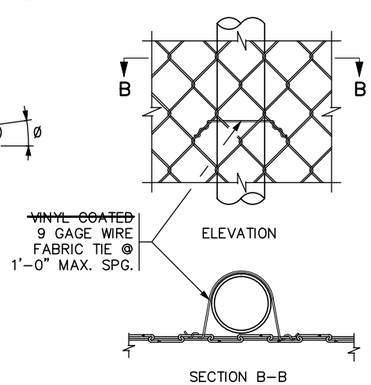

Ⓐ DETAIL "A"

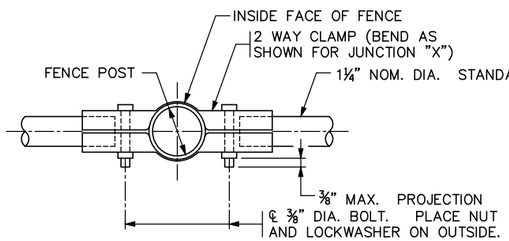

JUNCTION "Y"

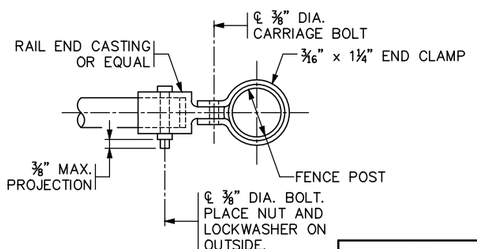

JUNCTION "Z"

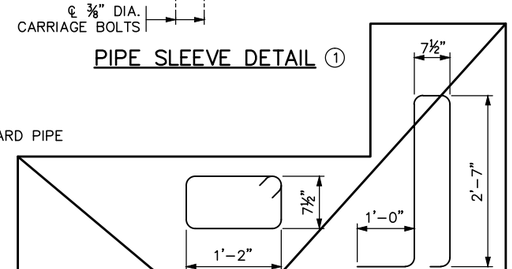

BILL OF REINFORCEMENT FOR PARAPET				
BAR	NO.	LENGTH	SHAPE	LOCATION
F501E		7'-3"		RAIL BASE VERTICAL
F502E		4'-6"		RAIL BASE VERTICAL
F403E				RAIL BASE LONGITUDINAL
F404E				RAIL BASE LONGITUDINAL

REVISED: 04-17-2013

APPROVED: DECEMBER 18, 2003
Daniel L Hozyan
STATE BRIDGE ENGINEER

CERTIFIED BY _____ LICENSED PROFESSIONAL ENGINEER _____ DATE

NAME: LIC. NO.

TITLE: WIRE FENCE (DESIGN W-1) Ⓐ

DES: PDC DR: JIK APPROVED:
CHK: SAD CHK: SAD
SHEET NO. 49 OF 67 SHEETS

FIG. 5-397.119 (MOD.)

BRIDGE NO. R0696

Jan. 15 2016 09:55 am V:\3400_ADC\CAD\SEGMENT E4\PLAN SHEETS\STRUCTURES\VAIWHT-TRL\CBR0696-BRG-DTL-006.dwg By: Jim.Kimble

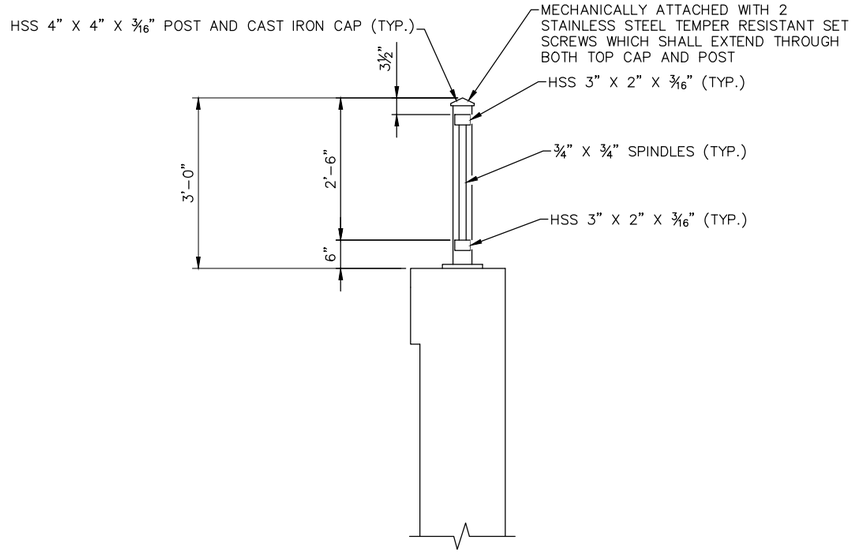

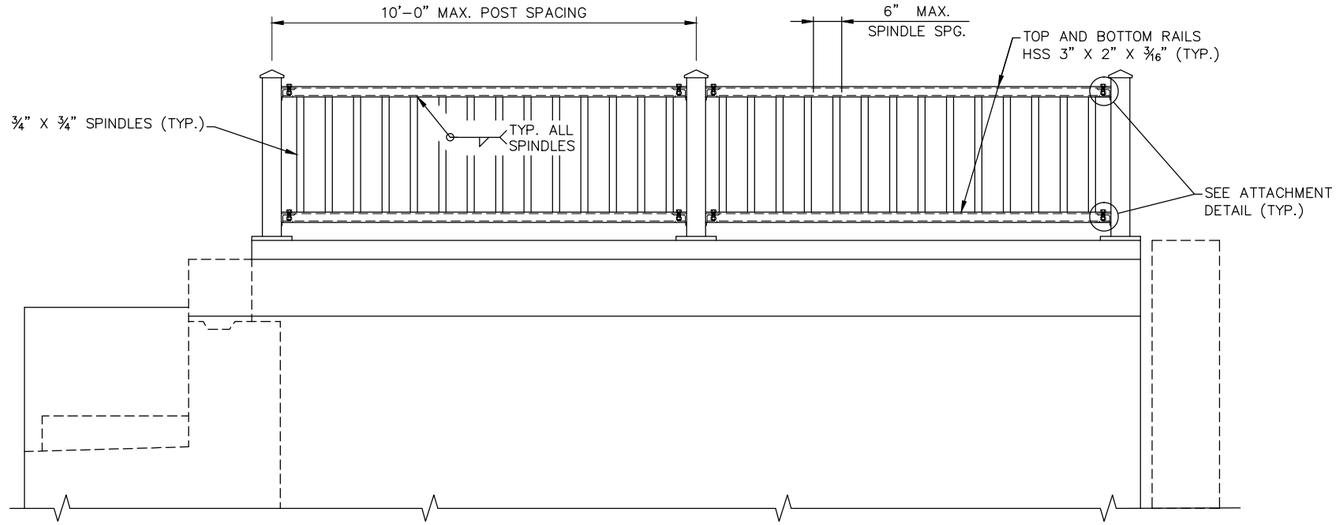

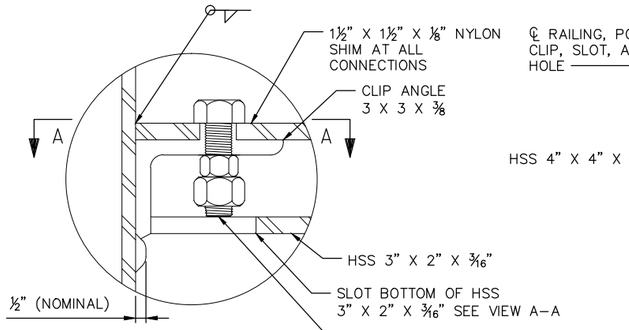

ATTACHMENT DETAIL

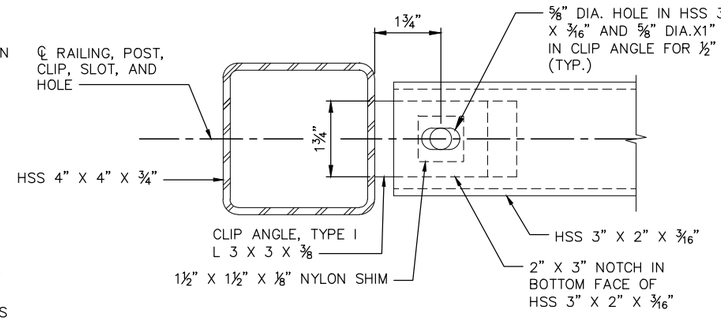

VIEW A-A

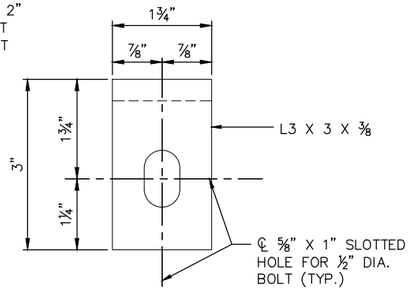

CLIP ANGLE

NOTES:

STRUCTURAL STEEL PER SPEC. 3309. STRUCTURAL TUBES ARE ASTM A500, GRADE B PER SPEC. 3361. FASTENERS PER SPEC. 3391.214.

GALVANIZE BOLTS, NUTS, AND WASHERS PER SPEC. 3392, STRUCTURAL STEEL SHAPES PER SPEC. 3394 AFTER FABRICATION.

RAIL POSTS AND SPINDLES SHALL BE VERTICAL.

HORIZONTAL RAIL MEMBERS SHALL BE PARALLEL TO WINGWALL PROFILE GRADE.

RAILING COLOR TO BE FEDERAL COLOR 14081 (DARK OLIVE). SEE SPECIAL PROVISIONS FOR ADDITIONAL PAINT REQUIREMENTS.

ADHESIVE ANCHORAGE WITH 5/8" DIA. ANCHOR ROD PER SPEC. 3385, TYPE A WITH HEX HEAD NUT AND WASHER. PROVIDE AN ADHESIVE WITH A MINIMUM CHARACTERISTIC BOND STRENGTH IN UNCRACKED CONCRETE OF 2.0 KSI. EMBED THE ANCHORAGE NO LESS THAN 4" REGARDLESS OF CHARACTERISTIC BOND STRENGTH. DRILL THROUGH REINFORCEMENT (IF ENCOUNTERED) TO ACHIEVE MINIMUM EMBEDMENT. ENSURE HEX NUT IS IN CONTACT WITH THE ADJACENT SURFACE AND TORQUE TO 60 FT-LBS UNLESS A HIGHER TORQUE IS RECOMMENDED BY THE MANUFACTURER. PROOF LOAD TO 5 KIPS. THE ADHESIVE SHALL HAVE A MINIMUM ULTIMATE PULL-OUT STRENGTH OF 10.0 KIPS.

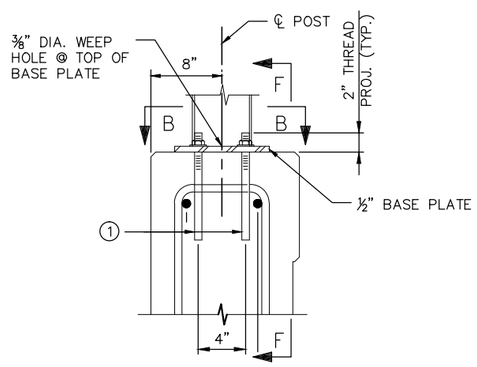

ANCHOR ASSEMBLY DETAILS

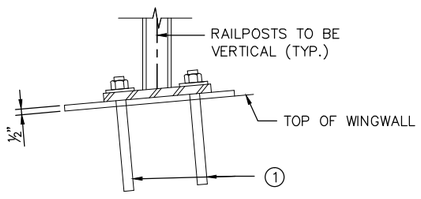

SECTION F-F

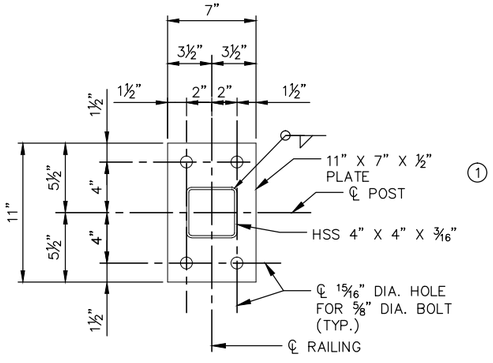

SECTION B-B BASE PLATE

NO.	DATE	BY	CHECK	DESIGN	REVISION / SUBMITTAL

DESIGNED BY: PDC | CHECKED BY: SAD
DRAWN BY: JIK | CHECKED BY: SAD

AECOM Kimley»Horn

90% SUBMISSION - 1/22/16

METROPOLITAN COUNCIL

SOUTHWEST Green Line LRT Extension

CIVIL - VOLUME 4G
LUCE LINE TRAIL BRIDGE
BRIDGE R0696
NORTHEAST WINGWALL RAILING DETAILS

DISCIPLINE: STRUCTURES
SHEET NAME: CBR0696-BRG-DTL-007

SHEET 50 OF 67

Jan. 15 2016 09:56 am V:\3400_ADC\CAD\SEGMENT E4\PLAN SHEETS\STRUCTURES\VNWHT-TRL\CBR0696-BRG-DTL-007.dwg By: Jim.Kimble

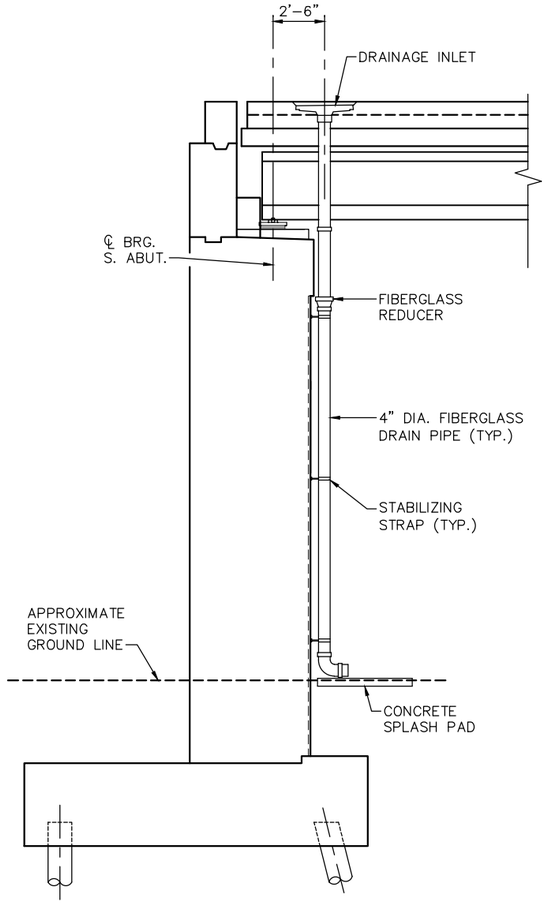

SECTION THRU WEST ABUTMENT

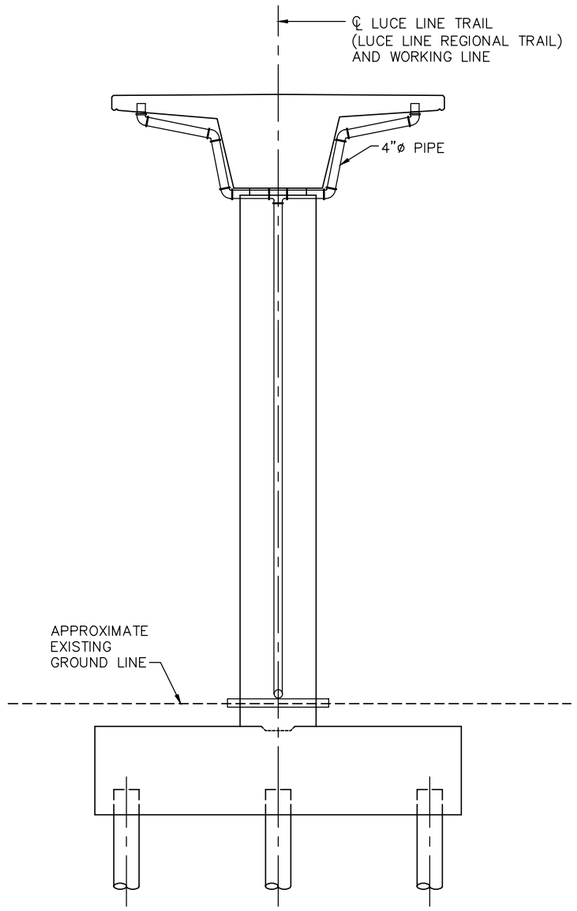

SECTION THRU PIER

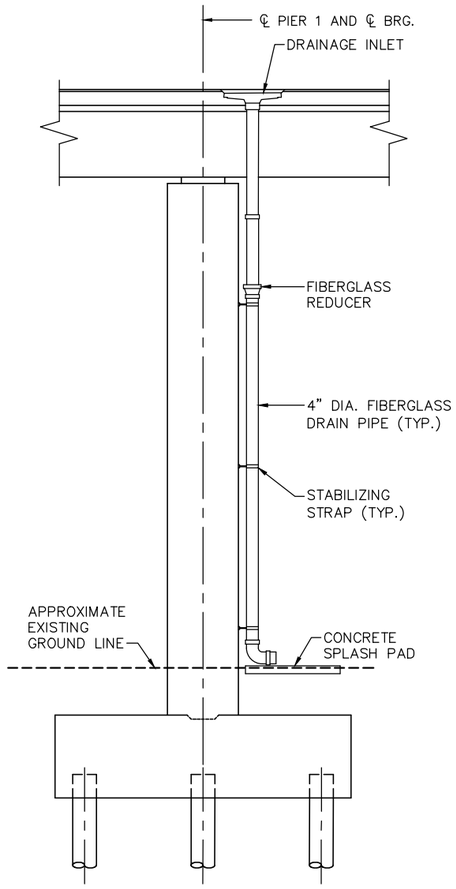

ELEVATION OF TYPICAL PIER

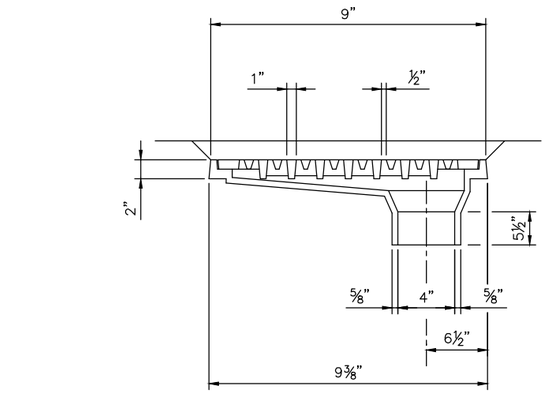

ELEVATION

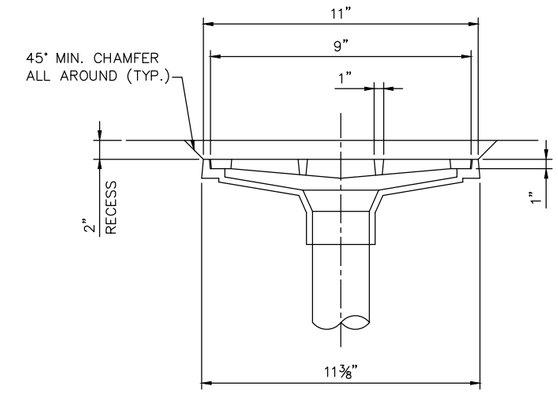

SECTION

DRAINAGE INLET DETAILS

NOTES:

ALL DRAINAGE PIPES AND FITTINGS SHALL BE PIGMENTED FIBERGLASS REINFORCED THERMOSETTING RESIN PIPE, SEE SPECIAL PROVISIONS. PIGMENT OF EXPOSED PIPING SHALL MATCH ADJACENT CONCRETE STRUCTURE.

SCUPPER SHALL BE R-4015-A BRIDGE SCUPPERS WITH TYPE P GRATE.

NO.	DATE	BY	CHECK	DESIGN	REVISION / SUBMITTAL

DESIGNED BY: PDC | CHECKED BY: SAD
DRAWN BY: JIK | CHECKED BY: SAD

AECOM Kimley»Horn

90% SUBMISSION - 01/22/16

METROPOLITAN COUNCIL

SOUTHWEST Green Line LRT Extension

CIVIL - VOLUME 4G
LUCE LINE TRAIL BRIDGE
BRIDGE R0696
DRAINAGE SYSTEM DETAILS

DISCIPLINE: STRUCTURES
SHEET NAME: CBR0696-BRG-DTL-008

SHEET 51 OF 67

Jan, 15 2016 10:45 am V:\3400_ADC\CAD\SEGMENT E4\PLAN SHEETS\STRUCTURES\VNWHT-TRL\CBR0696-BRG-DTL-008.dwg By: Jim.Kimble

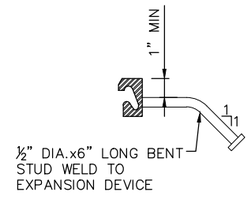

BENT STUD DETAIL

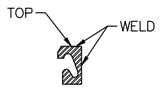

SECTION C–C

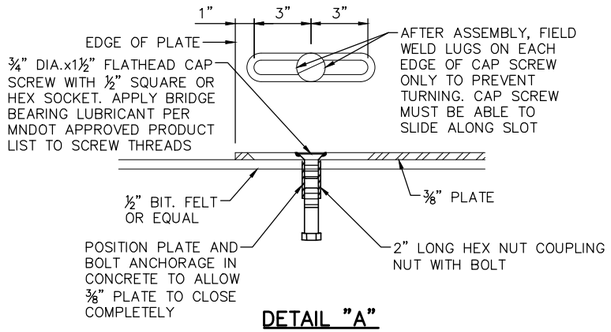

DETAIL "A"

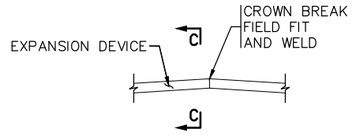

DETAIL "B"

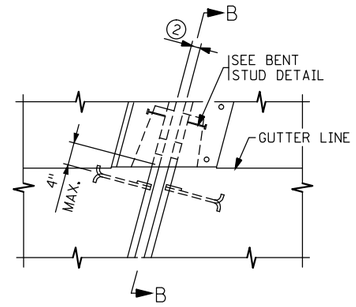

PLAN VIEW @ EXPANSION DEVICE

MEDIAN OR SIDEWALK ALTERNATE

GENERAL NOTES

GALVANIZE STRUCTURAL STEEL AFTER FABRICATION AS PER SPEC. 3394. GALVANIZE FASTENERS AS PER SPEC. 3392.

JOINTS IN EXTRUSION SHALL BE LOCATED AT BREAKS IN TRANSVERSE PROFILE AND AS OTHERWISE REQUIRED. JOINTS SHALL BE CLOSE FIT AND WELDED. REPAIR AFTER WELDING AS PER SPEC. 2471.3L.

STRUCTURAL STEEL SHALL COMPLY WITH SPEC. 3306 OR SPEC. 3309.

EXPANSION DEVICE SHALL BE STRAIGHTENED TO A TOLERANCE OF ⅛" IN 10 FT.

¾" DIA. X 1" FLATHEAD CAP SCREW WITH " SQUARE OR HEX SOCKET PER SPEC 3391. CAP SCREWS SHALL BE COUNTERSUNK 1/16" BELOW TOP OF PLATE. APPLY BRIDGE BEARING LUBRICANT PER MnDOT APPROVED PRODUCTS LIST TO SCREW THREADS

1. DIMENSIONS ARE ALONG CENTERLINE OF JOINT.
2. SPAN 1,4,6 AND 7 2 1/16" @ 45° F, 1½" @ 90° F.
3. ⅛"(¼" MAX.).
4. PLACE BAR–ROD NORMAL TO JOINT ON NEW BRIDGES AND JOINT REPLACEMENTS.
5. USE THE LARGEST SINGLE PIECE POSSIBLE. USE OF SMALL PIECES OR SCRAPS SECURED TOGETHER IS PROHIBITED.

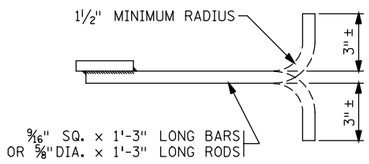

BAR-ROD DETAIL

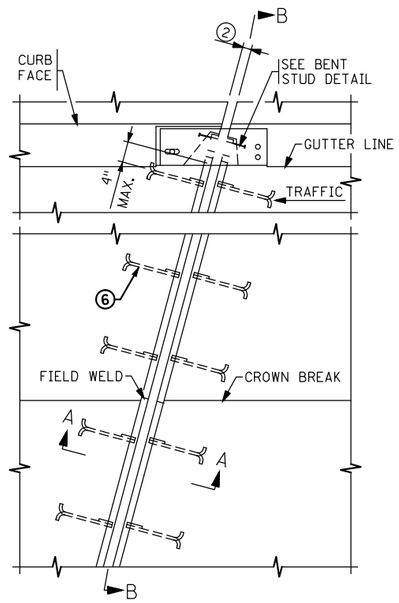

PLAN VIEW @ EXPANSION DEVICE

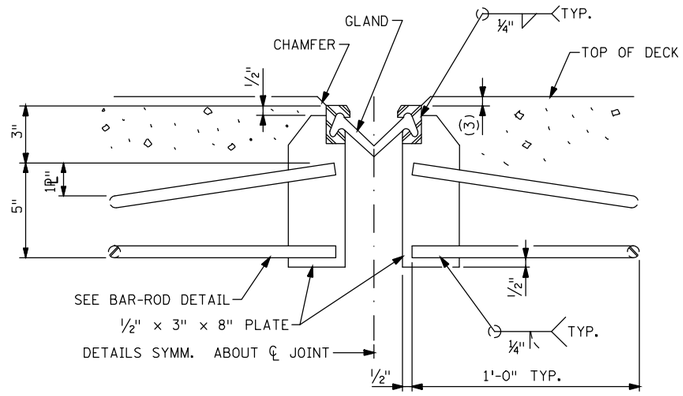

SECTION A-A

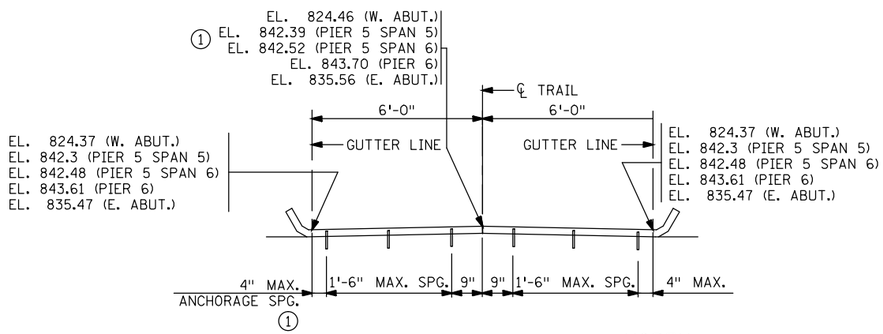

SECTION B-B ~ ALONG ℄ JOINT

NO.	DATE	BY	CHECK	DESIGN	REVISION / SUBMITTAL

DESIGNED BY: PDC | CHECKED BY: SAD
DRAWN BY: JIK | CHECKED BY: SAD

AECOM Kimley»Horn

90% SUBMISSION - 1/22/16

METROPOLITAN COUNCIL

SOUTHWEST Green Line LRT Extension

CIVIL - VOLUME 4G
LUCE LINE TRAIL BRIDGE
BRIDGE R0696
WATERPROOF EXPANSION DEVICE

DISCIPLINE: STRUCTURES
SHEET NAME: CBR0696-BRG-DTL-009

SHEET 52 OF 67

Jan. 15 2016 09:56 am V:\3400_ADC\CAD\SEGMENT E4\PLAN SHEETS\STRUCTURES\VNWHT-TRL\CBR0696-BRG-DTL-009.dwg By: Jim.Kimble

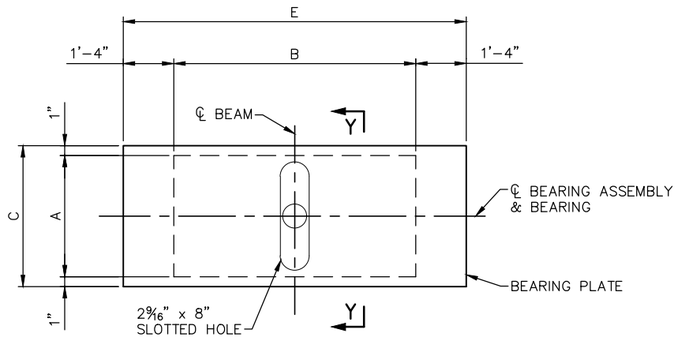

PLAN

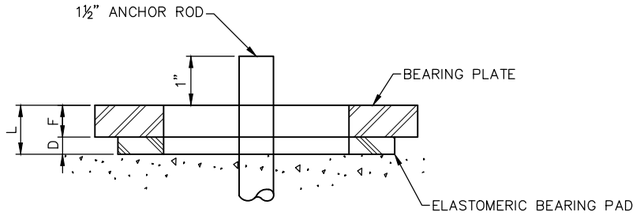

SECTION Y–Y

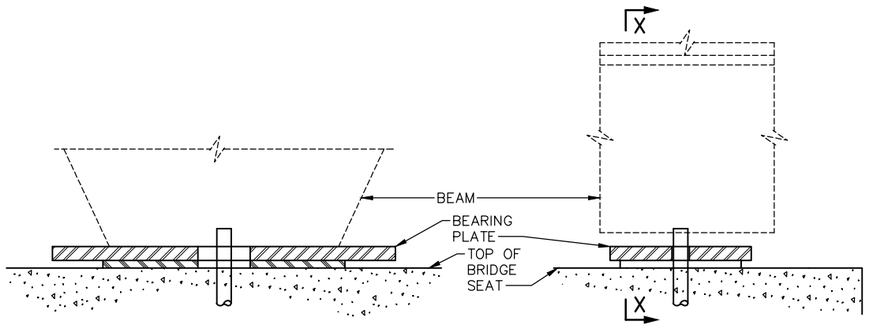

SECTION X–X

SIDE ELEVATION

TABLE									
ASSEMBLY TYPE	LOCATION	BEARING PAD SIZE			SHAPE FACTOR	BEARING PLATE SIZE			ASSY. HEIGHT
		A	B	D		C	E	F	L
E1	W. ABUT.								5⅛"
E2	PIER 1	18"	24"	2½"	8.2	20"	27"	2¾"	5¼"
E2	PIER 4	18"	24"	2½"	8.2	20"	27"	2¾"	5¼"
E1	PIER 5	9"	18"	3⅜"	5.4	11"	21"	1½"	5⅛"

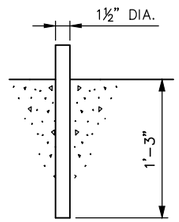

ANCHOR ROD DETAIL

NOTES:

ELASTOMERIC MATERIALS AND PAD CONSTRUCTION SHALL COMPLY WITH SPEC. 3741.

ALL STEEL PLATES SHALL COMPLY WITH MnDOT SPEC. 3306.

ANCHOR RODS SHALL COMPLY WITH SPEC. 3306.
GALVANIZE PER SPEC. 3392.

GALVANIZE STRUCTURAL STEEL BEARING ASSEMBLY AFTER FABRICATION PER SPEC. 3394, EXCEPT AS NOTED.

NO.	DATE	BY	CHECK	DESIGN	REVISION / SUBMITTAL

DESIGNED BY: PDC CHECKED BY: SAD
DRAWN BY: JIK CHECKED BY: SAD

AECOM Kimley»Horn

90% SUBMISSION - 1/22/16

METROPOLITAN COUNCIL

SOUTHWEST Green Line LRT Extension

CIVIL- VOLUME 4G
LUCE LINE TRAIL BRIDGE
BRIDGE R0696
BEARING DETAILS

DISCIPLINE: STRUCTURES
SHEET NAME: CBR0696-BRG-DTL-010

SHEET 53 OF 67

Jan, 15 2016 09:57 am V:\3400_ADC\CAD\SEGMENT E4\PLAN SHEETS\STRUCTURES\VNWHT-TRL\CBR0696-BRG-DTL-010.dwg By: Jim.Kimble

CONCRETE WEARING COURSE

☐ LOW SLUMP

☐ OTHER _____
TYPE OR MANUFACTURER

EXPANSION JOINTS

JOINT MANUFACTURER

MANUFACTURER'S IDENTIFICATION _____
MFR'S No. AND/OR LETTER DESIGNATION FOR JOINT USED

GLAND MANUFACTURER _____
NAME AND ADDRESS (CITY, STATE)

SIZE OF GLAND _____

MANUFACTURER'S IDENTIFICATION _____
MFR'S No. AND/OR LETTER DESIGNATION FOR GLAND USED

ELASTOMERIC BEARING PADS

PAD MANUFACTURER _____
NAME AND ADDRESS (CITY, STATE)

SPECIAL SURFACE FINISH

SYSTEM: _____ COLOR: _____

FINISHING ROADWAY FACES OF BARRIER RAILING

TYPE: _____ COLOR: _____

ANTI-GRAFFITI COATING

MANUFACTURER _____
NAME AND ADDRESS (CITY, STATE)

PRODUCT NAME: _____ LOCATION: _____

PAINT SYSTEM

Mn/DOT SPECIFICATION NUMBER _____
2478 OR 2479 OR OTHER

MANUFACTURER _____
NAME AND ADDRESS (CITY, STATE)

PRIME COAT _____
Mn/DOT MATERIAL SPECIFICATION NUMBER

INTERMEDIATE COAT _____
Mn/DOT MATERIAL SPECIFICATION NUMBER

FINISH COAT _____ _____
Mn/DOT MATERIAL SPECIFICATION NUMBER COLOR

PLAN QUALITY

RATE 1 (AGREE), 2 (NEUTRAL), OR 3 (DISAGREE, PLEASE COMMENT BELOW)

DIMENSIONING AND DETAILING ADEQUATELY DESCRIBED REQUIRED CONSTRUCTION. _____
BAR LISTS AND QUANTITIES WERE TYPICALLY COMPLETE AND FREE OF ERRORS. _____
SCALE OF DRAWINGS AND OVERALL LEGIBILITY OF LINES AND TEXT WAS GOOD. _____
(SB) SPECIAL PROVISIONS ADEQUATELY DESCRIBED SPECIAL WORK AND PAYMENT. _____

COMMENTS: _____

NUMBER OF BRIDGE
SUPPLEMENTAL AGREEMENTS: _____ COST: $ _____

LIST SIGNIFICANT ERRORS OR OMISSIONS IN PLAN DETAILS OR PAY QUANTITIES IN THE SPACE PROVIDED AT RIGHT.

BRIDGE REMOVAL / BRIDGE OPENING

NUMBER OF AND DATE OLD BRIDGE WAS REMOVED (IF APPLICABLE):

BRIDGE NUMBER _____ DATE REMOVED _____

DATE NEW BRIDGE WAS OPENED TO TRAFFIC _____

NOTIFY THE BRIDGE OFFICE BRIDGE MANAGEMENT UNIT WITH THIS INFORMATION AS SOON AS POSSIBLE. (651) 366-4557

OTHER ITEMS ①

① UTILITIES ADDED DURING CONSTRUCTION AND SPECIALTY ITEMS.

FINAL QUANTITIES ENTERED ON SCHEDULE OF QUANTITIES: YES ☐ NO ☐

SUMMARY OF SIGNIFICANT AS-BUILT CHANGES

THE AS-BUILT INFORMATION WAS ADDED TO THE PLAN BY:

_____ _____
INSPECTOR(S) SIGNATURE DATE

CHECKED BY: _____ _____
PROJECT ENGINEER/SUPERVISOR SIGNATURE DATE

AT THE TIME OF THE FINAL, THIS COMPLETED AS-BUILT BRIDGE DATA SHEET MUST BE SUBMITTED TO THE BRIDGE OFFICE - ATTN: REGIONAL CONSTRUCTION ENGINEER (MS610).

REVISION: 10-28-2008

APPROVED: SEPTEMBER 26, 2003
Daniel L. Hogan
STATE BRIDGE ENGINEER

AS-BUILT DETAILS
(AS NEEDED)

FIG. 5-397.900

TITLE: AS-BUILT BRIDGE DATA

DES:	DR:	APPROVED:	BRIDGE NO.
CHK:	CHK:		R0696

SHEET NO. 54 OF 67 SHEETS

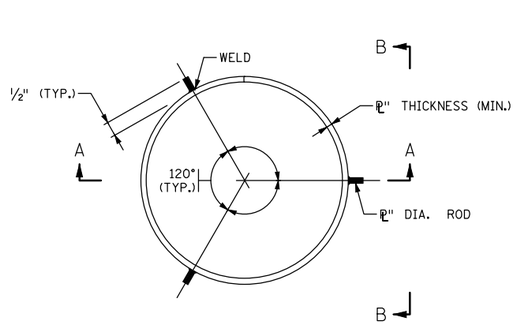

PLAN VIEW - SPLICE BACK-UP RING

PILE NOT SHOWN

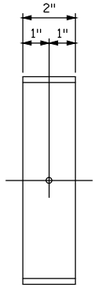

SECTION B-B

PILE NOT SHOWN

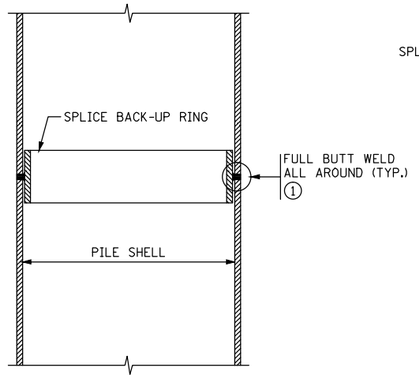

SECTION A-A

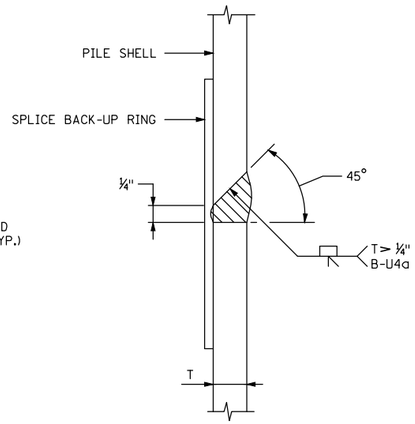

DETAIL "A" ①

NOTES:

APPROVED COMMERCIAL PILE SPLICE BACK-UP RING MAY BE USED IN LIEU OF THE TYPE DETAILED, PROVIDED THAT ¼" ROOT IS MAINTAINED. BACK-UP RING SHALL HAVE A TIGHT FIT.

WELDING ELECTRODES SHALL BE CELLULOSIC TYPE ELECTRODES E-6010 OR E-6011.

ELECTRODES WHICH HAVE BECOME WET, SOILED OR DAMAGED SHALL NOT BE USED.

WELDING SHALL NOT BE DONE WHEN THE AMBIENT TEMPERATURE IS LOWER THAN 0°F. OR WHEN THE PILE IS WET OR EXPOSED TO FALLING RAIN OR SNOW. WHEN THE PILE METAL TEMPERATURE IS BELOW 32°F., THE PILE METAL IN THE AREA OF THE WELD SHALL BE HEATED TO A MINIMUM TEMPERATURE OF 70°F. AND MAINTAINED AT THIS TEMPERATURE DURING WELDING.

① FOR PILE SHELL THICKNESSES GREATER THAN ¼", USE A B-U4a WELD CONFIGURATION. SEE DETAIL "A".

APPROVED: NOVEMBER 22, 2002 Daniel L Dorgan STATE BRIDGE ENGINEER	STATE OF MINNESOTA DEPARTMENT OF TRANSPORTATION PILE SPLICE (CAST-IN-PLACE CONCRETE PILES)	REVISION: 11-06-2013	DETAIL NO. B201

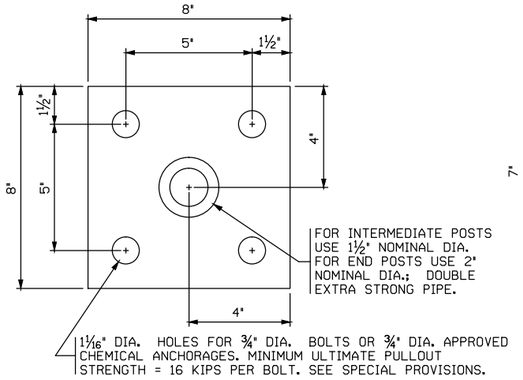

PLAN VIEW – TYPE A

ESTIMATED WEIGHT = 12 OR 14 LBS.

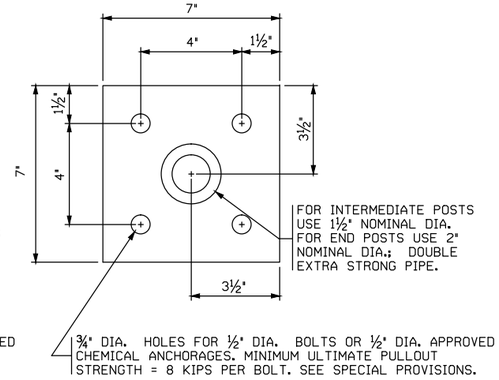

PLAN VIEW – TYPE B

ESTIMATED WEIGHT = 10 OR 12 LBS.

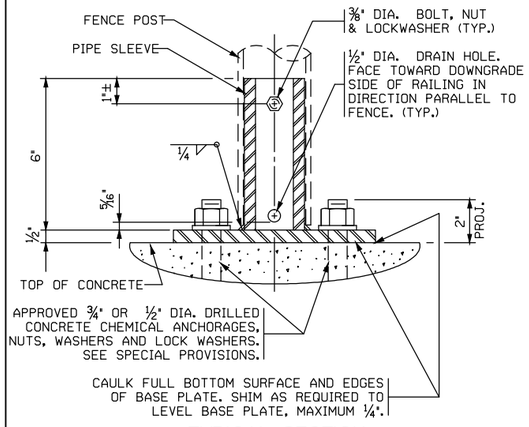

TYPICAL SECTION

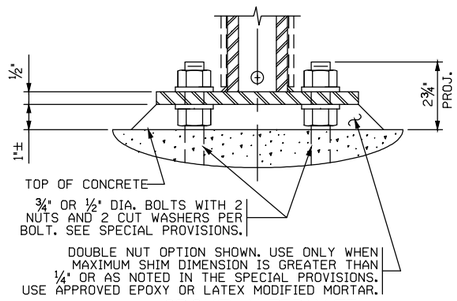

GROUT ALTERNATE

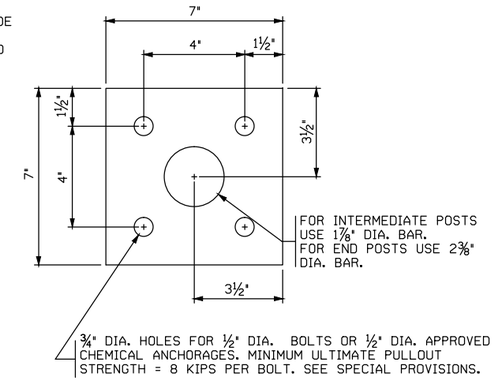

PLAN VIEW – TYPE C

ESTIMATED WEIGHT = 12 OR 15 LBS.

NOTES:

STRUCTURAL STEEL PER Mn/DOT SPEC. 3306

STRUCTURAL PIPE PER Mn/DOT SPEC. 3362

GALVANIZE THE FENCE POST ANCHORAGE AFTER FABRICATION PER Mn/DOT SPEC. 3394. GALVANIZE THE FASTENERS PER Mn/DOT SPEC. 3392.

DOUBLE EXTRA STRONG PIPE WEIGHTS:
1½" NOMINAL DIA. = 6.41 LBS./FT.
2" NOMINAL DIA. = 9.03 LBS./FT.

APPROVED: NOVEMBER 22, 2002 Daniel L Dorgan STATE BRIDGE ENGINEER	STATE OF MINNESOTA DEPARTMENT OF TRANSPORTATION FENCE POST ANCHORAGE	REVISION	DETAIL NO. B905

NO.	DATE	BY	CHECK	DESIGN	REVISION / SUBMITTAL

DESIGNED BY: PDC CHECKED BY: SAD
DRAWN BY: JIK CHECKED BY: SAD

AECOM Kimley»Horn

90% SUBMISSION - 1/22/16

METROPOLITAN COUNCIL

SOUTHWEST Green Line LRT Extension

CIVIL - VOLUME 4G
LUCE LINE TRAIL BRIDGE
BRIDGE R0696
BRIDGE DETAILS 1

DISCIPLINE: STRUCTURES
SHEET NAME: CBR0696-BRG-DTL-012

SHEET 55 OF 67

Jan. 15 2016 09:57 am V:\3400_ADC\CAD\SEGMENT E4\PLAN SHEETS\STRUCTURES\VNWHT-TRL\CBR0696-BRG-DTL-012.dwg By: Jim.Kimble

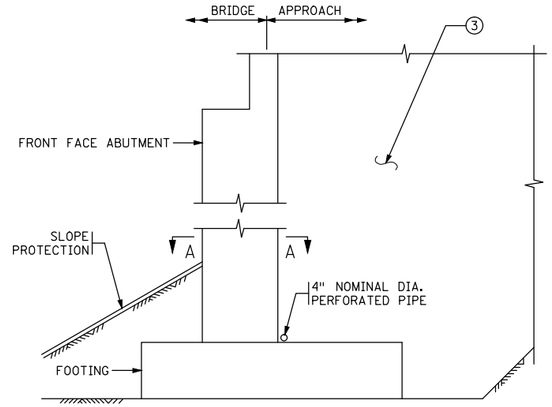

SECTION THROUGH PARAPET AND SEMI-INTEGRAL ABUTMENTS

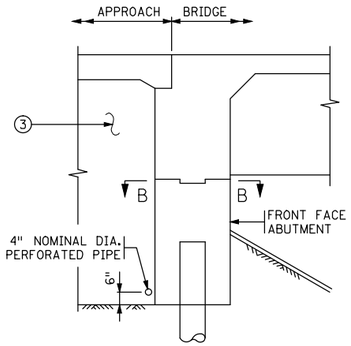

SECTION THROUGH INTEGRAL ABUTMENT

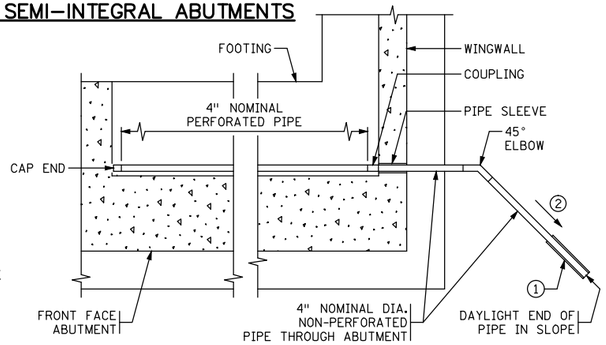

SECTION A-A

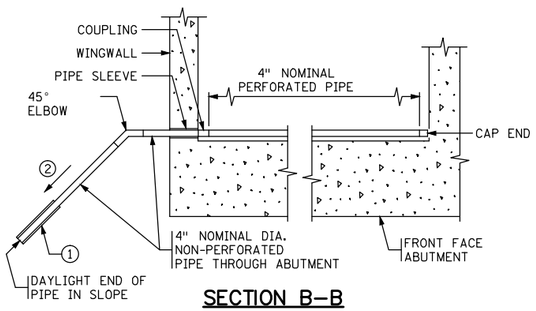

SECTION B-B

NOTES:

PAYMENT WILL BE INCLUDED IN THE SINGLE LUMP SUM PRICE FOR "DRAINAGE SYSTEM TYPE (B910)", INCLUDES BUT IS NOT LIMITED TO 4" DIAMETER PERFORATED AND NON-PERFORATED PIPE, ELBOWS, END CAPS, COUPLINGS, SLEEVES AND PRECAST CONCRETE HEADWALLS.

ALL PIPE TO COMPLY WITH SPEC. 3245.

WRAP PERFORATED PIPE WITH GEOTEXTILE PER SPEC. 3733, TYPE 1. ATTACH TO PIPE PER SPEC. 2502.

(1) AT CONTRACTORS OPTION, MAY TIE APPROACH PANEL DRAINAGE SYSTEM AND ABUTMENT DRAINAGE SYSTEM INTO A SINGLE PRECAST CONCRETE HEADWALL OR INTO A CATCH BASIN AS LONG AS A MINIMUM OF 1% POSITIVE SLOPE CAN BE MANTAINED.

USE PRECAST CONCRETE HEADWALL WITH RODENT SCREEN. SEE STANDARD PLATE 3131 FOR DETAILS.

(2) ⅛" PER FT. MINIMUM SLOPE.

(3) REFER TO GRADING PLANS FOR ABUTMENT BACKFILL REQUIREMENTS.

APPROVED: JANUARY 13, 2015	STATE OF MINNESOTA DEPARTMENT OF TRANSPORTATION	REVISED	DETAIL NO.
Nancy Daubenberger STATE BRIDGE ENGINEER	DRAINAGE SYSTEM		B910

NO.	DATE	BY	CHECK	DESIGN	REVISION / SUBMITTAL

DESIGNED BY: PDC CHECKED BY: SAD
DRAWN BY: JIK CHECKED BY: SAD

AECOM Kimley»Horn

90% SUBMISSION - 1/22/16

METROPOLITAN COUNCIL

SOUTHWEST Green Line LRT Extension

CIVIL - VOLUME 4G
LUCE LINE TRAIL BRIDGE
BRIDGE R0696
BRIDGE DETAILS 2

DISCIPLINE: STRUCTURES
SHEET NAME: CBR0696-BRG-DTL-013

SHEET 56 OF 67

Jan. 15 2016 09:57 am V:\3400_ADC\CAD\SEGMENT E4\PLAN SHEETS\STRUCTURES\VMWHT-TRL\CBR0696-BRG-DTL-013.dwg By: Jim.Kimble

CONTRACTED PROFILE

SCALE HORIZ.: 0 50'

SCALE VERT.: 0 10'

PROFILE GRADE LUCE LINE TRAIL (LUCE LINE REGIONAL TRAIL)

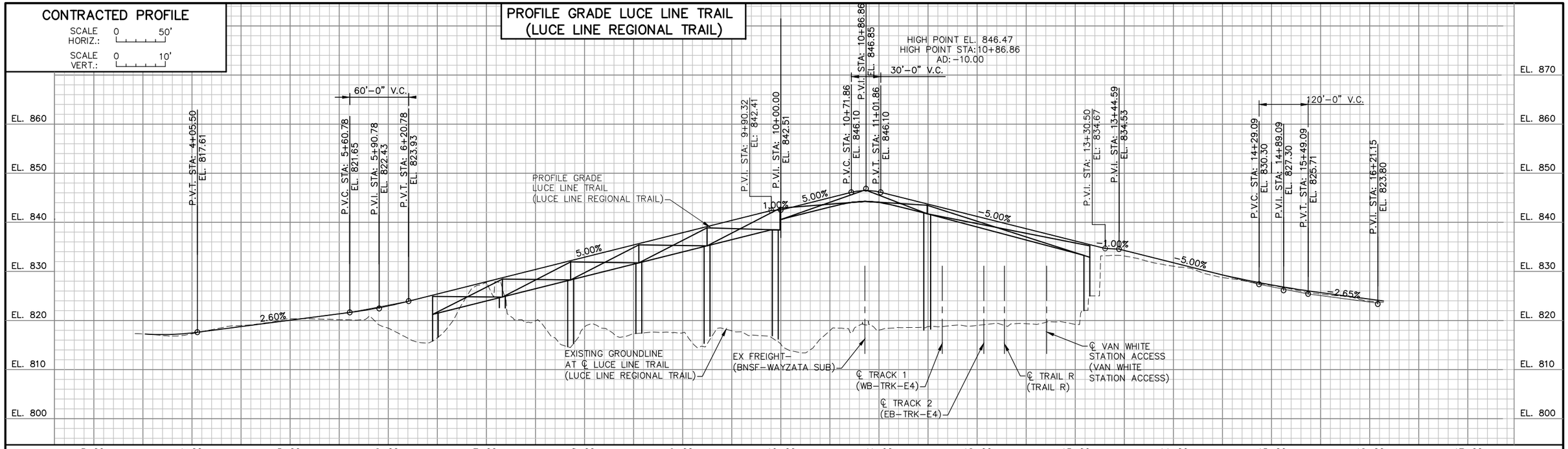

PLAT

SCALE: 0 30'

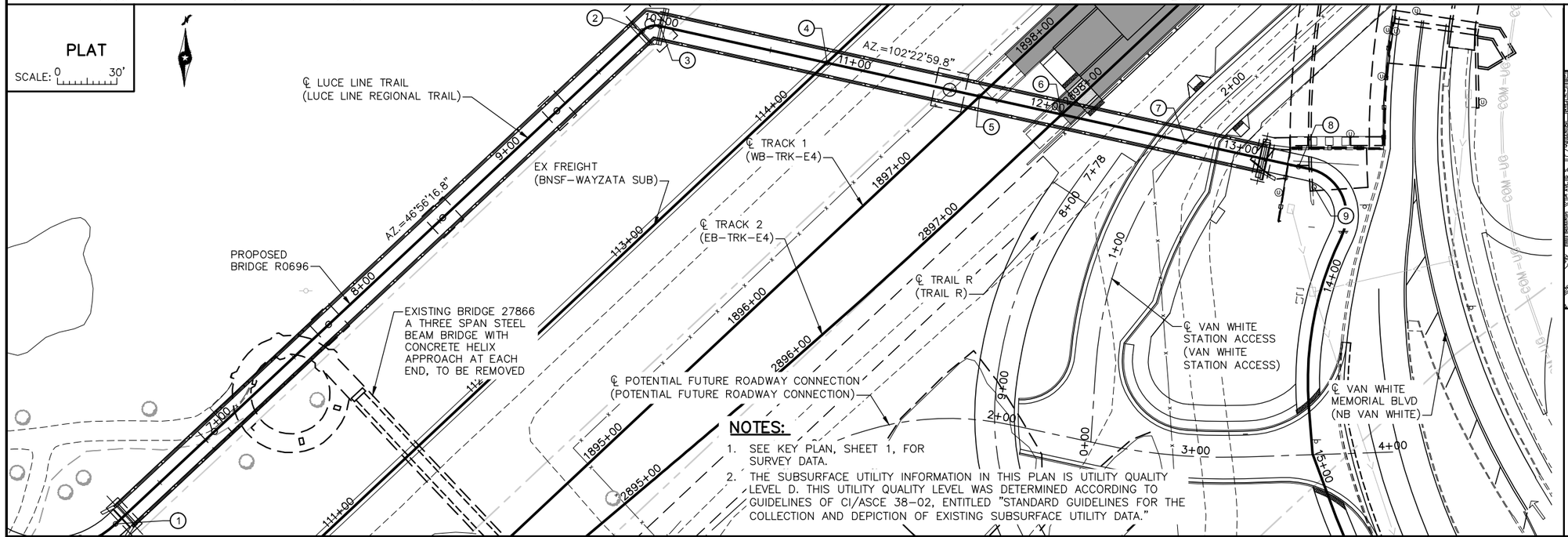

NOTES:

1. SEE KEY PLAN, SHEET 1, FOR SURVEY DATA.
2. THE SUBSURFACE UTILITY INFORMATION IN THIS PLAN IS UTILITY QUALITY LEVEL D. THIS UTILITY QUALITY LEVEL WAS DETERMINED ACCORDING TO GUIDELINES OF CI/ASCE 38-02, ENTITLED "STANDARD GUIDELINES FOR THE COLLECTION AND DEPICTION OF EXISTING SUBSURFACE UTILITY DATA."

INDEX MAP

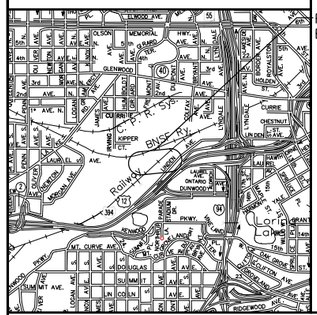

BRIDGE SURVEY

PROPOSED BRIDGE LOCATED 0.5 MILES SOUTHWEST OF JCT. I-94 AND TH-394 IN MINNEAPOLIS

LUCE LINE TRAIL OVER BNSF RAILWAY AND SOUTHWEST LRT

SEC 28 T 29N R 24W

CITY OF MINNEAPOLIS HENNEPIN COUNTY

BRIDGE R0696

NO.	DATE	BY	CHECK	DESIGN	REVISION / SUBMITTAL

DESIGNED BY: PDC CHECKED BY: SAD

DRAWN BY: JIK CHECKED BY: SAD

AECOM Kimley»Horn

90% SUBMISSION - 1/22/16

METROPOLITAN COUNCIL

SOUTHWEST Green Line LRT Extension

CIVIL - VOLUME 4G
LUCE LINE TRAIL BRIDGE
BRIDGE R0696
BRIDGE SURVEY 1

DISCIPLINE: STRUCTURES

SHEET NAME: CBR0696-BRG-SUR-001

SHEET 57 OF 67

Jan, 15 2016 10:00 am V:\3400_ADC\CAD\SEGMENT E4\PLAN SHEETS\STRUCTURES\VNWHT-TRL\CBR0696-BRG-SUR-001.dwg By: Jim.Kimble

CONTRACTED PROFILE

SCALE HORIZ.: 0 50'

SCALE VERT.: 0 10'

PROFILE GRADE EX. FREIGHT– (BNSF–WAYZATA SUB)

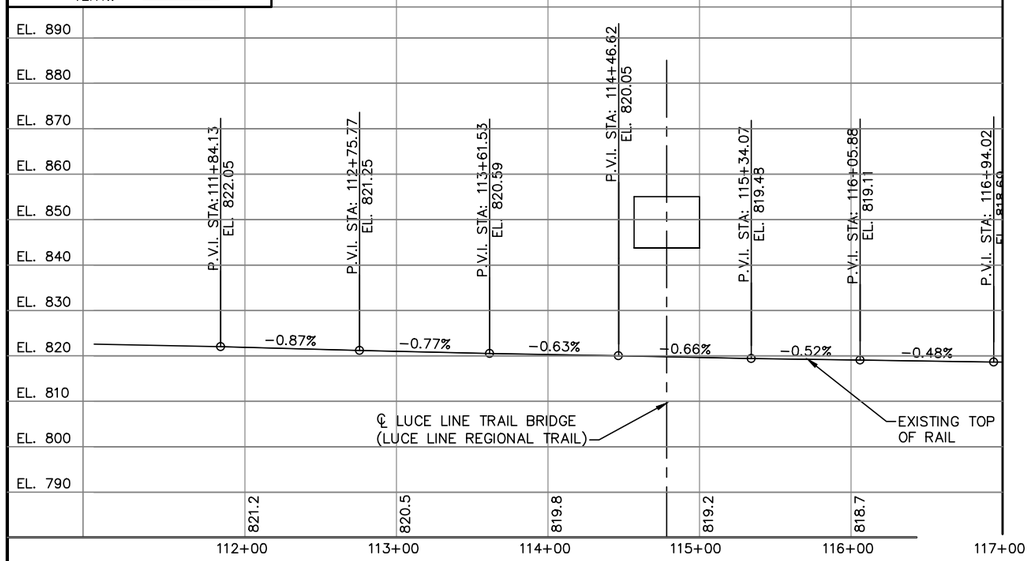

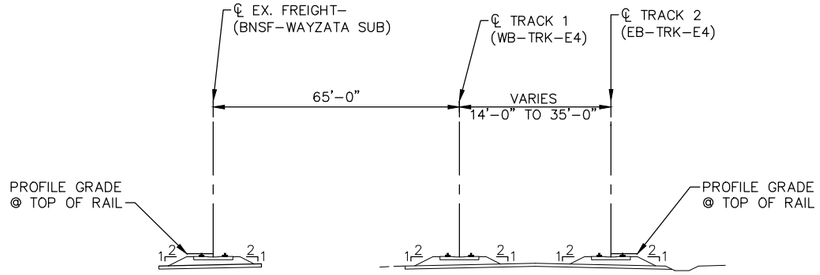

TYPICAL SECTIONS EX. FREIGHT AND TRACK 1 AND TRACK 2

CONTRACTED PROFILE

SCALE HORIZ.: 0 50'

SCALE VERT.: 0 10'

PROFILE GRADE TRACK 2 (EB–TRK–E4)

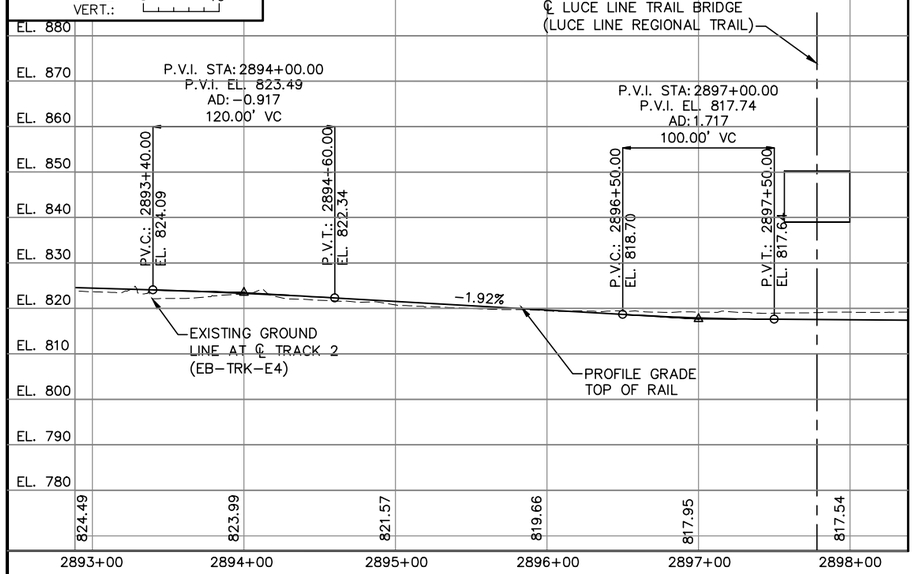

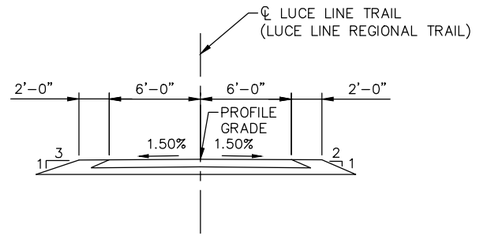

TYPICAL SECTIONS LUCE LINE TRAIL

LOCATION ENGINEER'S OBSERVATIONS AT BRIDGE SITE

1. SPECIAL FEATURES: WATERFALLS, DAMS, FLOODS, ICE, DEBRIS SLIDING BANKS, RECREATIONAL BOATING.
2. OTHER BRIDGES OR CULVERTS OVER THE SAME STREAM (PARTICULARLY STRUCTURES WHICH CARRY HIGH WATER WITHOUT OVERFLOW OF ROADWAY): GIVEN LOCATION, TYPE, LENGTH, HEIGHT ABOVE HIGH WATER, CROSS–SECTIONAL AREA ETC.
3. APPARENT HIGHWATER ELEVATION OBTAINED FROM:
4. OTHER DATA: APPROX. VELOCITY OF WATER AT TIME OF SURVEY.

HYDRAULIC ENGINEER'S RECOMMENDATION

DATE:

STREAM OR DITCH DESIGNATION

DRAINAGE AREA

MAX FLOOD ON RECORD

DESIGN FLOOD (YR. FREQ.): C.F.S.
HEADWATER ELEVATION: FT.
DESIGN MEAN VELOCITY THROUGH STRUCTURE F.P.S.
TOTAL STAGE INCREASE FT.
LOW MEMBER AT OR ABOVE ELEVATION FT.

WATERWAY AREA REQUIRED BELOW ELEV. = SQ. FT.
AT RIGHT ANGLES TO CHANNEL

BASIC FLOOD (100 YR. FREQ.) C.F.S.
HEADWATER ELEVATION: FT.
TOTAL STAGE INCREASE FT.
MEAN VELOCITY THROUGH STRUCTURE

FLOWLINE ELEVATION: FT. SKEW ANGLE:

ESTIMATED PRELIMINARY TOTAL SCOUR AT PIER EL.
(500 OR OT YR. FREQ.)

SCOUR CONFIRMATION RECOMMENDATION

DATE:

TOTAL SCOUR AT PIER EL. (500 OR OT YR. FREQ.)
SCOUR CODE: OBTAIN FROM HYDRAULIC ENGINEER

BRIDGE SURVEY = SHEETS MADE FROM 2014 MFRA SURVEYS

1ST BENCH MARK (NAVD88)
ELEVATION: 838.49
NORTHING: 166512.10
EASTING: 522182.52
DESCRIPTION: DRILL HOLE IN CONCRETE

2ND BENCH MARK (NAVD88)
ELEVATION: 841.33
NORTHING: 166200.34
EASTING: 522480.63
DESCRIPTION: DRILL HOLE IN CONCRETE

NO.	DATE	BY	CHECK	DESIGN	REVISION / SUBMITTAL

DESIGNED BY: PDC CHECKED BY: SAD
DRAWN BY: JIK CHECKED BY: SAD

AECOM Kimley»Horn

90% SUBMISSION - 1/22/16

METROPOLITAN COUNCIL

SOUTHWEST Green Line LRT Extension

CIVIL - VOLUME 4G
LUCE LINE TRAIL BRIDGE
BRIDGE R0696
BRIDGE SURVEY 2

DISCIPLINE: STRUCTURES

SHEET NAME: CBR0696-BRG-SUR-002

SHEET 58 OF 67

Jan. 15 2016 10:01 am V:\3400_ADC\CAD\SEGMENT E4\PLAN SHEETS\STRUCTURES\VNWHT-TRL\CBR0696-BRG-SUR-002.dwg By: Jim.Kimble

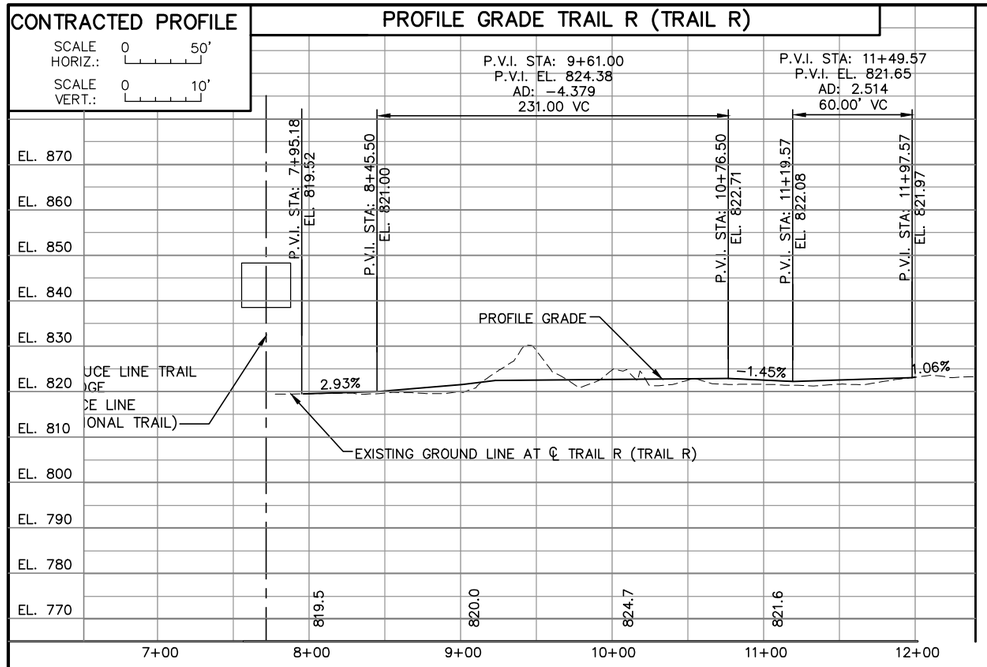

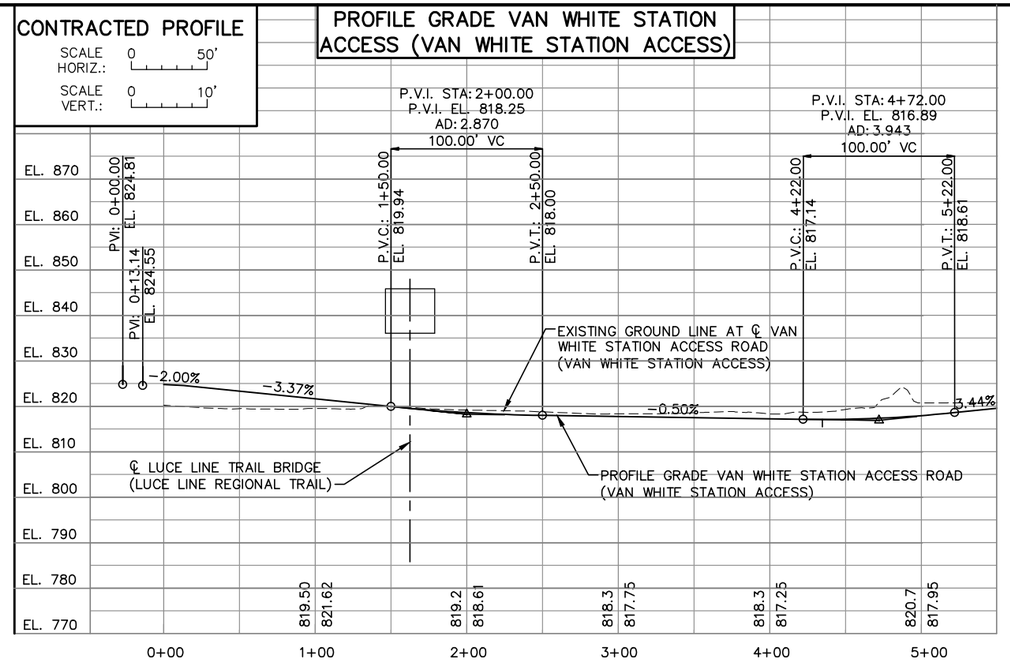

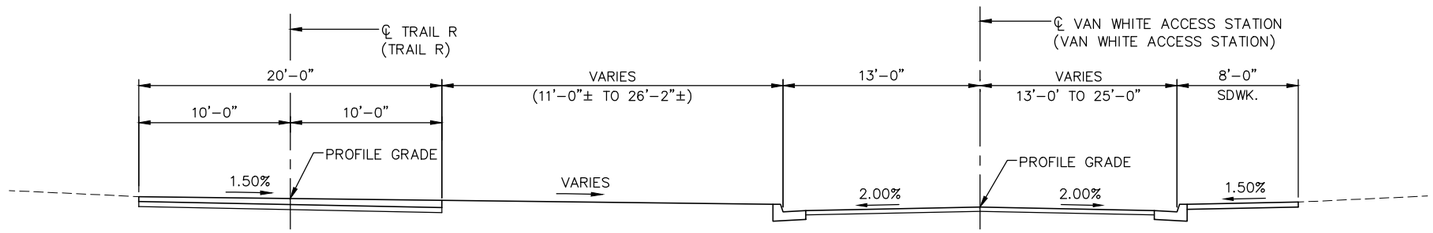

TYPICAL SECTIONS TRAIL R AND VAN WHITE ACCESS STATION

NO.	DATE	BY	CHECK	DESIGN	REVISION / SUBMITTAL

DESIGNED BY: PDC CHECKED BY: SAD
DRAWN BY: JIK CHECKED BY: SAD

AECOM Kimley»Horn

90% SUBMISSION - 1/22/16

METROPOLITAN COUNCIL

SOUTHWEST Green Line LRT Extension

CIVIL - VOLUME 4G
LUCE LINE TRAIL BRIDGE
BRIDGE R0696
BRIDGE SURVEY 3

DISCIPLINE: STRUCTURES
SHEET NAME: CBR0696-BRG-SUR-003

SHEET 59 OF 67

Jan. 15 2016 10:02 am V:\3400_ADC\CAD\SEGMENT E4\PLAN SHEETS\STRUCTURES\VNWHT-TRL\CBR0696-BRG-SUR-003.dwg By: Jim.Kimble

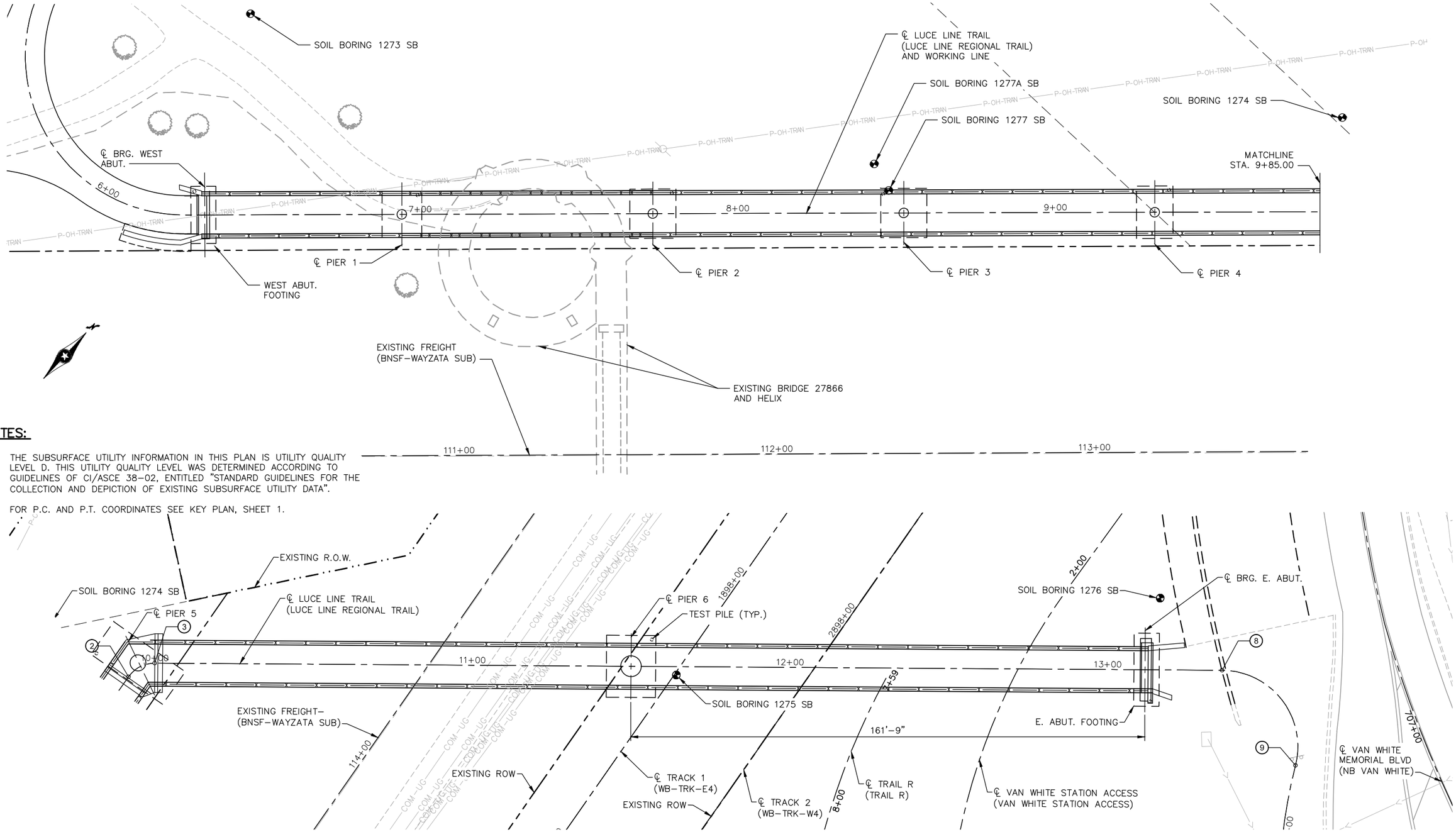

NOTES:

1. THE SUBSURFACE UTILITY INFORMATION IN THIS PLAN IS UTILITY QUALITY LEVEL D. THIS UTILITY QUALITY LEVEL WAS DETERMINED ACCORDING TO GUIDELINES OF CI/ASCE 38–02, ENTITLED "STANDARD GUIDELINES FOR THE COLLECTION AND DEPICTION OF EXISTING SUBSURFACE UTILITY DATA".
2. FOR P.C. AND P.T. COORDINATES SEE KEY PLAN, SHEET 1.

NO.	DATE	BY	CHECK	DESIGN	REVISION / SUBMITTAL

DESIGNED BY: PDC CHECKED BY: SAD
DRAWN BY: JIK CHECKED BY: SAD

AECOM Kimley»Horn

90% SUBMISSION - 1/22/16

METROPOLITAN COUNCIL

SOUTHWEST Green Line LRT Extension

CIVIL - VOLUME 4G
LUCE LINE TRAIL BRIDGE
BRIDGE R0696
BRIDGE SURVEY PLAN

DISCIPLINE: STRUCTURES

SHEET NAME: CBR0696-BRG-BOR-001

SHEET 60 OF 67

Jan, 15 2016 10:05 am V:\3400_ADC\CAD\SEGMENT E4\PLAN SHEETS\STRUCTURES\VNWHT-TRL\CBR0696-BRG-BOR-001.dwg By: Jim.Kimble

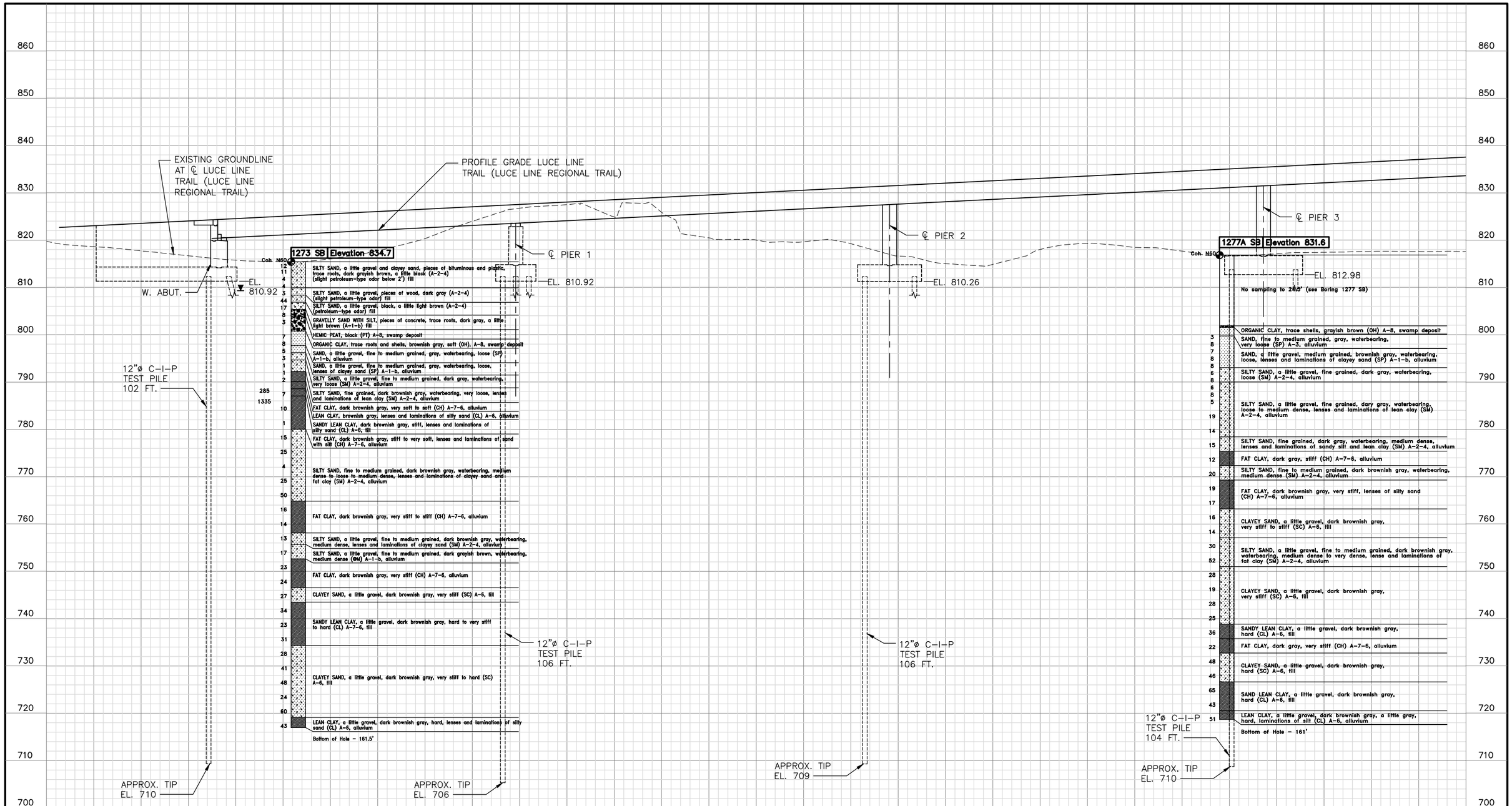

NO.	DATE	BY	CHECK	DESIGN	REVISION / SUBMITTAL

DESIGNED BY: PDC | CHECKED BY: SAD
DRAWN BY: JIK | CHECKED BY: SAD

AECOM Kimley»Horn

90% SUBMISSION - 1/22/16

METROPOLITAN COUNCIL

SOUTHWEST Green Line LRT Extension

CIVIL - VOLUME 4G
LUCE LINE TRAIL BRIDGE
BRIDGE R0696
BRIDGE SURVEY PROFILE 1

DISCIPLINE: STRUCTURES

SHEET NAME: CBR0696-BRG-BOR-002

SHEET 61 OF 67

Jan. 15 2016 10:06 am V:\3400_ADC\CAD\SEGMENT E4\PLAN SHEETS\STRUCTURES\VNWHT-TRL\CBR0696-BRG-BOR-002.dwg By: Jim.Kimble

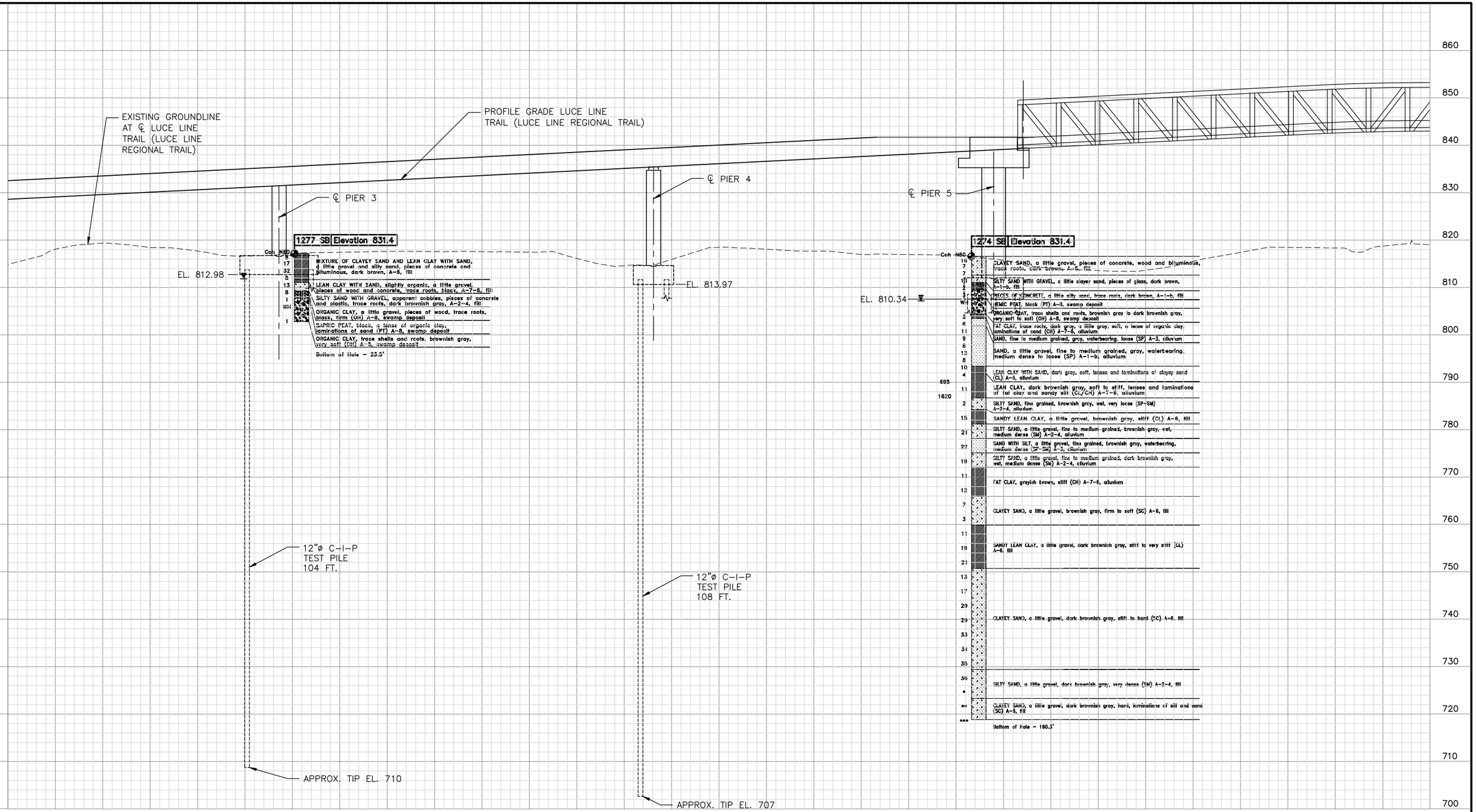

Jan. 15 2016 10:06 am V:\3400_ADC\CAD\SEGMENT E4\PLAN SHEETS\STRUCTURES\VNWHT-TRL\CBR0696-BRG-BOR-003.dwg By: Jim.Kimble

NO.	DATE	BY	CHECK	DESIGN	REVISION / SUBMITTAL

DESIGNED BY: PDC | CHECKED BY: SAD
DRAWN BY: JIK | CHECKED BY: SAD

AECOM Kimley»Horn

90% SUBMISSION - 1/22/16

METROPOLITAN COUNCIL

SOUTHWEST Green Line LRT Extension

CIVIL - VOLUME 4G
LUCE LINE TRAIL BRIDGE
BRIDGE R0696
BRIDGE SURVEY PROFILE 2

DISCIPLINE: STRUCTURES

SHEET NAME: CBR0696-BRG-BOR-003

SHEET 62 OF 67

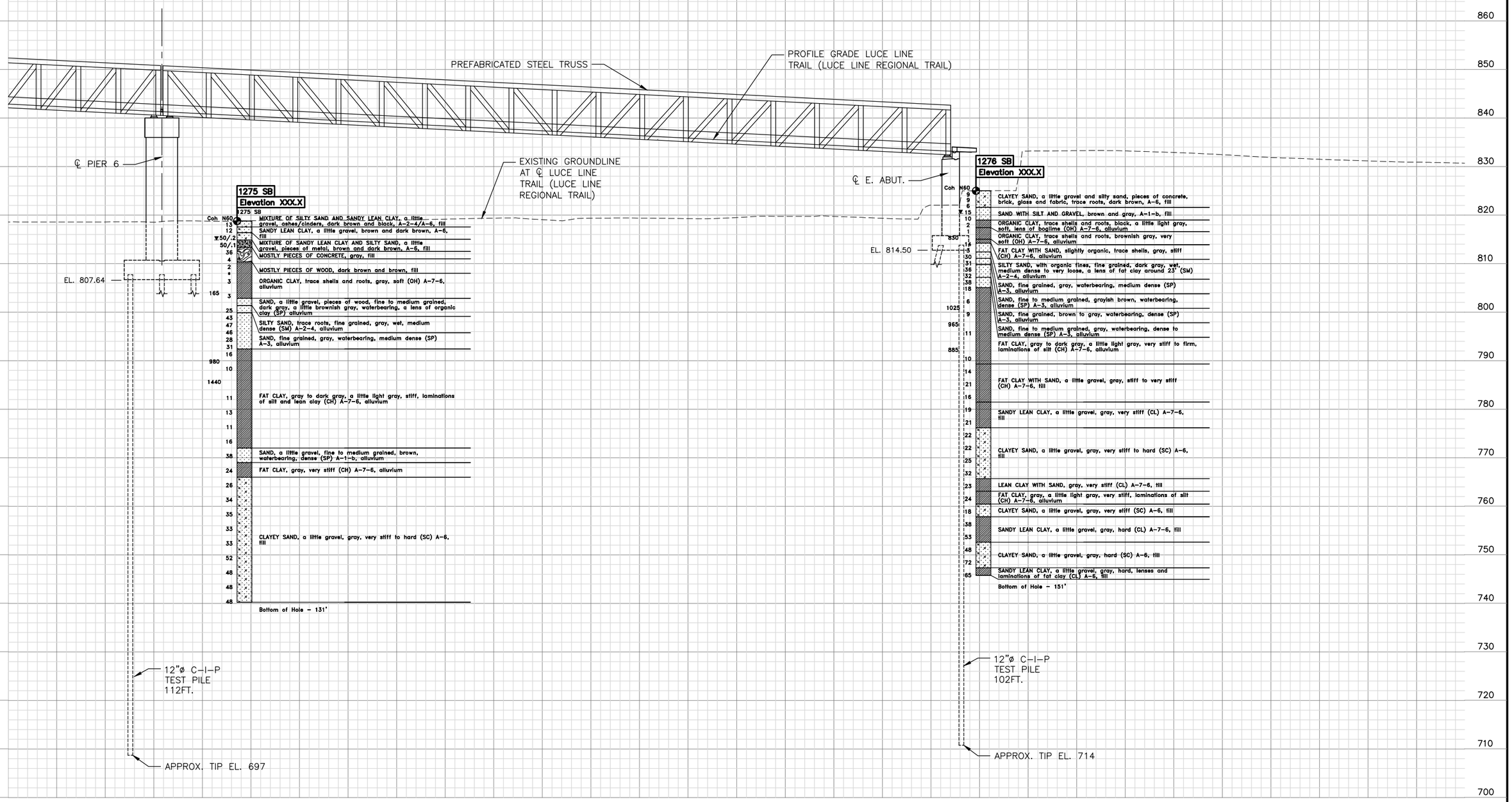

Jan, 15 2016 10:07 am V:\3400_ADC\CAD\SEGMENT E4\PLAN SHEETS\STRUCTURES\VNWHT-TRL\CBR0696-BRG-BOR-004.dwg By: Jim.Kimble

NO.	DATE	BY	CHECK	DESIGN	REVISION / SUBMITTAL

DESIGNED BY: PDC | CHECKED BY: SAD
DRAWN BY: JIK | CHECKED BY: SAD

AECOM Kimley»Horn

90% SUBMISSION - 1/22/16

METROPOLITAN COUNCIL

SOUTHWEST Green Line LRT Extension

CIVIL - VOLUME 4G
LUCE LINE TRAIL BRIDGE
BRIDGE R0696
BRIDGE SURVEY PROFILE 3

DISCIPLINE: STRUCTURES

SHEET NAME: CBR0696-BRG-BOR-004

SHEET 63 OF 67

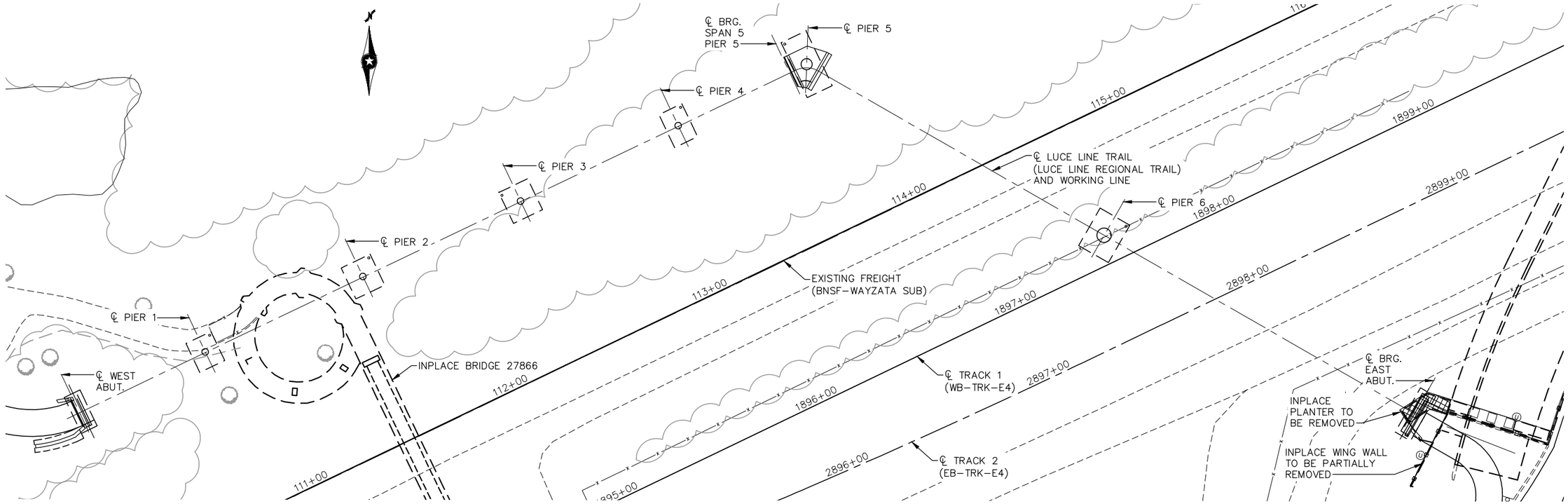

PROPOSED CONSTRUCTION SEQUENCING – STAGE 1

STAGING NOTES:

REMOVE EXISTING SOUTHWEST BRIDGEHEAD PLANTER AND FOOTINGS FOR BRIDGE 27B02.

REMOVE EXISTING METAL RAIL AND WINGWALL FOR BRIDGE 27B02 TO APPROXIMATELY 1' BELOW EXISTING GRADE AND UP TO THE EXISTING BRIDGE BACKWALL.

CONSTRUCT FOOTINGS AND PIERS FOR BRIDGE R0696 BACKFILL STRUCTURE. CONSTRUCT LUCE LINE REGIONAL TRAIL.

STAGING REQUIREMENTS:

ALL TRACKS MUST BE KEPT OPEN FOR TRACK USE DURING CONSTRUCTION EXCEPT WITH PRIOR APPROVAL. BNSF SHALL HAVE FINAL AUTHORITY ON PERMITTED TRACK CLOSURES.

LUCE LINE REGIONAL TRAIL SHALL BE KEPT OPEN FOR PUBLIC USE DURING CONSTRUCTION EXCEPT WITH PRIOR APPROVAL.

NO.	DATE	BY	CHECK	DESIGN	REVISION / SUBMITTAL

DESIGNED BY: PDC | CHECKED BY: SAD
DRAWN BY: JIK | CHECKED BY: SAD

AECOM Kimley»Horn

90% SUBMISSION - 1/22/16

METROPOLITAN COUNCIL

SOUTHWEST Green Line LRT Extension

CIVIL - VOLUME 4G
LUCE LINE TRAIL BRIDGE
BRIDGE R0696
STAGING PLAN 1

DISCIPLINE: STRUCTURES
SHEET NAME: CBR0696-BRG-SUP-007

SHEET 64 OF 67

Jan, 15 2016 10:08 am V:\3400_ADC\CAD\SEGMENT E4\PLAN SHEETS\STRUCTURES\VNWHT-TRL\CBR0696-BRG-SUP-007.dwg By: Jim.Kimble

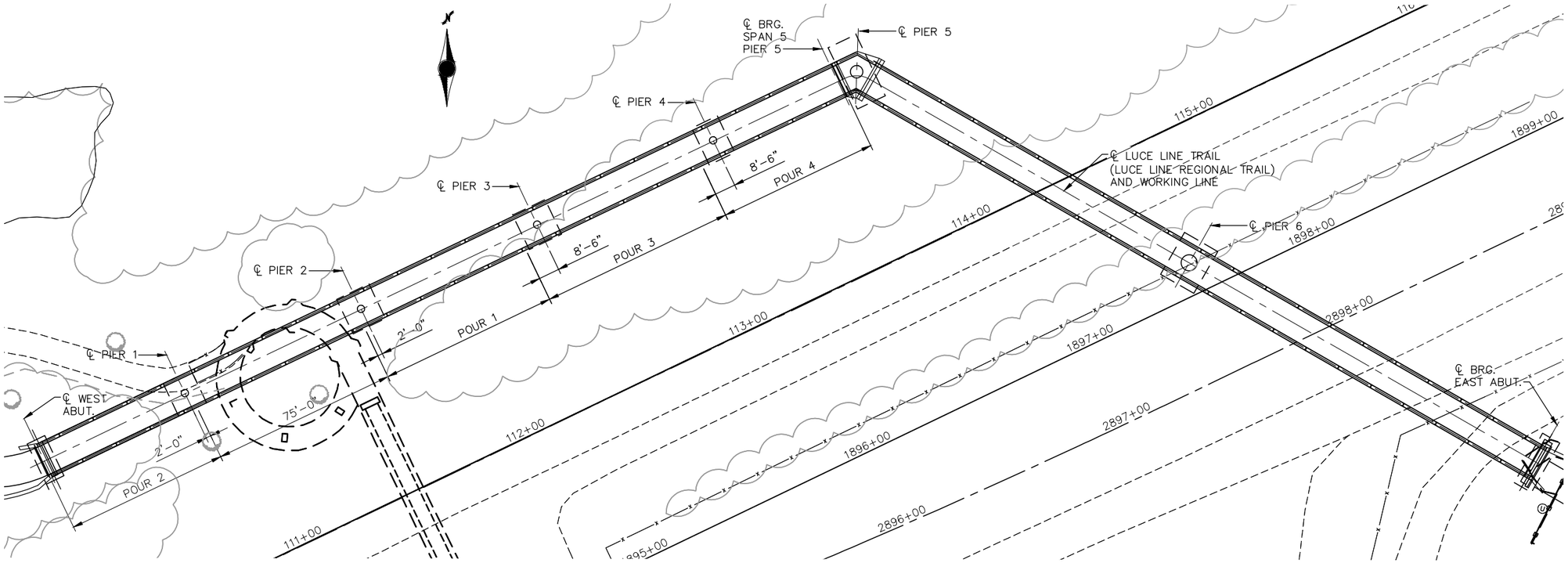

PROPOSED CONSTRUCTION SEQUENCING – STAGE 2

STAGING NOTES:

CONSTRUCT SUPERSTRUCTURE IN SPANS 1, 3, 4 AND 5 (POURS 1–4). DO NOT REMOVE FALSEWORK UNTIL ENTIRE SUPERSTRUCTURE HAS BEEN CONSTRUCTED.

ERECT STEEL TRUSS IN SPANS 6 AND 7.

CONSTRUCT TEMPORARY TRAIL TO PIER 2 AND INSTALL TRAFFIC CONTROL TO DIRECT TRAIL USERS TO THE NEWLY CONSTRUCTED BRIDGE ACCESS AT PIER 2. PROVIDE TEMPORARY ACCESS (STAIRS) AT PIER 2. PROVIDE TEMPORARY RAILING ON NORTH SIDE OF SPAN 3 FOR PEDESTRIAN USE.

FALSEWORK SHALL BE DESIGNED TO SUPPORT STRUCTURE DEAD LOAD, SELF–WELDING, CONSTRUCTION LOADS AND A PEDESTRIAN LOAD OF 90 psf.

STAGING REQUIREMENTS:

ALL TRACKS MUST BE KEPT OPEN FOR TRACK USE DURING CONSTRUCTION EXCEPT WITH PRIOR APPROVAL. BNSF SHALL HAVE FINAL AUTHORITY ON PERMITTED TRACK CLOSURES.

LUCE LINE REGIONAL TRAIL SHALL BE KEPT OPEN FOR PUBLIC USE DURING CONSTRUCTION EXCEPT WITH PRIOR APPROVAL.

NO.	DATE	BY	CHECK	DESIGN	REVISION / SUBMITTAL

DESIGNED BY: PDC CHECKED BY: SAD
DRAWN BY: JIK CHECKED BY: SAD

AECOM Kimley»Horn

90% SUBMISSION - 1/22/16

METROPOLITAN COUNCIL

SOUTHWEST Green Line LRT Extension

CIVIL - VOLUME 4G
LUCE LINE TRAIL BRIDGE
BRIDGE R0696
STAGING PLAN 2

DISCIPLINE: STRUCTURES
SHEET NAME: CBR0696-BRG-SUP-008

SHEET 65 OF 67

Jan. 15 2016 10:10 am V:\3400_ADC\CAD\SEGMENT E4\PLAN SHEETS\STRUCTURES\VNWHT-TRL\CBR0696-BRG-SUP-008.dwg By: Jim.Kimble

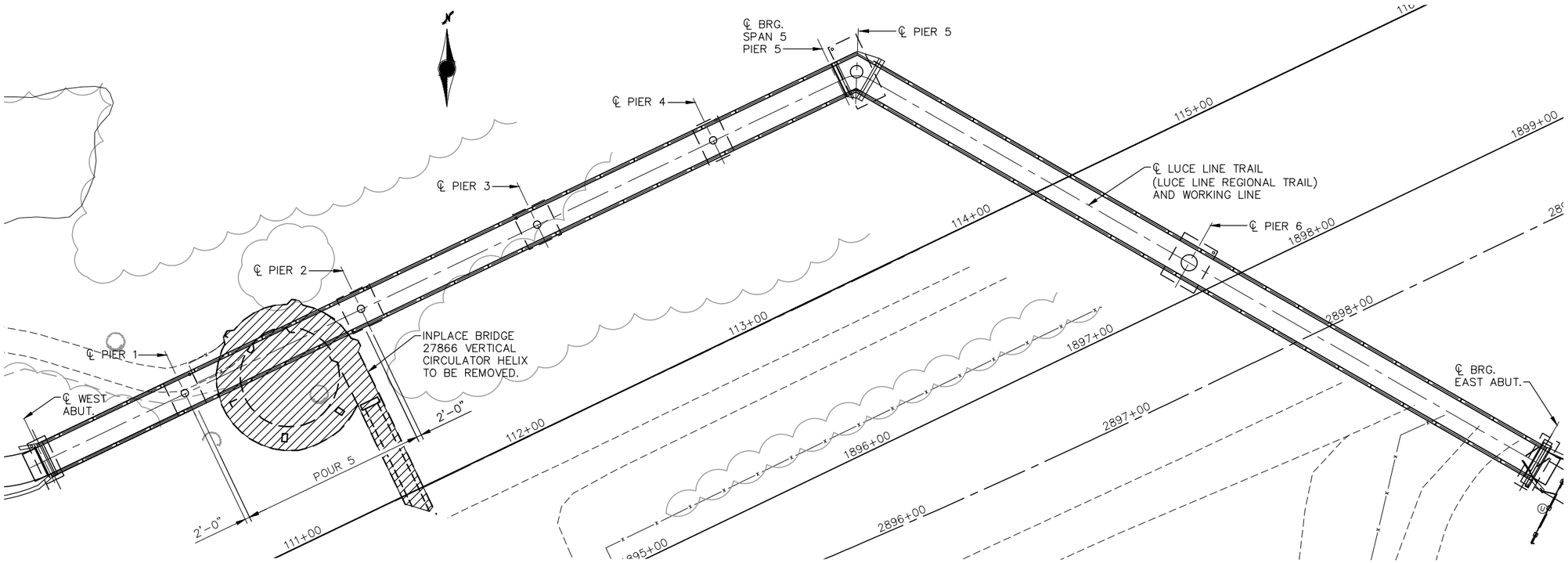

PROPOSED CONSTRUCTION SEQUENCING – STAGE 3

STAGING NOTES:

REMOVE EXISTING HELIX FOR BRIDGE 27866.

CONSTRUCT TEMPORARY TRAIL TO EXISTING PIER OF BRIDGE 27866 AND INSTALL TRAFFIC CONTROL TO DIRECT TRAIL USERS TO TEMPORARY ACCESS (STAIRS) AT THE EXISTING PIER OF BRIDGE 27866.

CONSTRUCT SPAN 2 (POUR 5) AND INSTALL RAILING IN SPAN 3.

STAGING REQUIREMENTS:

ALL TRACKS MUST BE KEPT OPEN FOR TRACK USE DURING CONSTRUCTION EXCEPT WITH PRIOR APPROVAL. BNSF SHALL HAVE FINAL AUTHORITY ON PERMITTED TRACK CLOSURES.

LUCE LINE REGIONAL TRAIL SHALL BE KEPT OPEN FOR PUBLIC USE DURING CONSTRUCTION EXCEPT WITH PRIOR APPROVAL.

NO.	DATE	BY	CHECK	DESIGN	REVISION / SUBMITTAL

DESIGNED BY: PDC | CHECKED BY: SAD
DRAWN BY: JIK | CHECKED BY: SAD

AECOM Kimley»Horn

90% SUBMISSION - 1/22/16

METROPOLITAN COUNCIL

SOUTHWEST Green Line LRT Extension

CIVIL - VOLUME 4G
LUCE LINE TRAIL BRIDGE
BRIDGE R0696
STAGING PLAN 3

DISCIPLINE: STRUCTURES
SHEET NAME: CBR0696-BRG-SUP-009

SHEET 66 OF 67

Jan, 15 2016 10:11 am V:\3400_ADC\CAD\SEGMENT E4\PLAN SHEETS\STRUCTURES\WNWHT-TRL\CBR0696-BRG-SUP-009.dwg By: Jim.Kimble

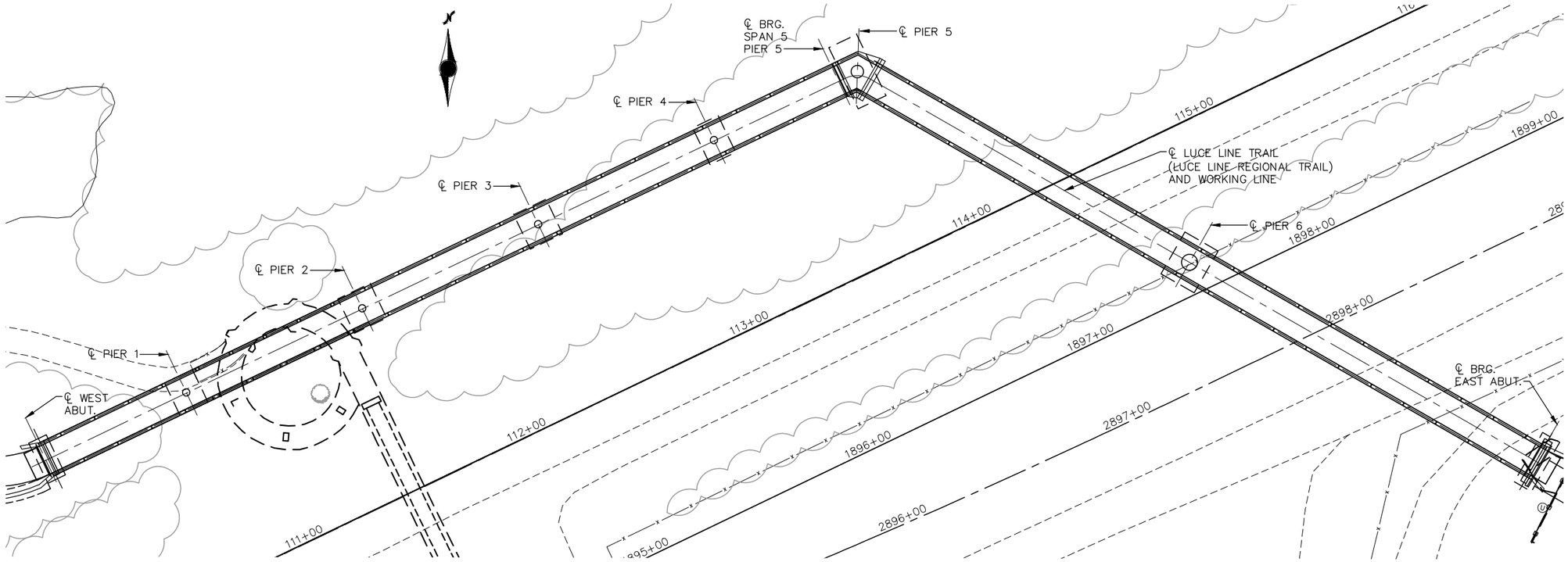

PROPOSED CONSTRUCTION SEQUENCING – STAGE 4

STAGING NOTES:

RELOCATE TEMPORARY LUCE LINE REGIONAL TRAIL TO FINAL ALIGNMENT.

REMOVE BRIDGE 27866.

STAGING REQUIREMENTS:

ALL TRACKS MUST BE KEPT OPEN FOR TRACK USE DURING CONSTRUCTION EXCEPT WITH PRIOR APPROVAL. BNSF SHALL HAVE FINAL AUTHORITY ON PERMITTED TRACK CLOSURES.

LUCE LINE REGIONAL TRAIL SHALL BE KEPT OPEN FOR PUBLIC USE DURING CONSTRUCTION EXCEPT WITH PRIOR APPROVAL.

NO.	DATE	BY	CHECK	DESIGN	REVISION / SUBMITTAL

DESIGNED BY: PDC CHECKED BY: SAD
DRAWN BY: JIK CHECKED BY: SAD

AECOM Kimley»Horn

90% SUBMISSION - 1/22/16

METROPOLITAN COUNCIL

SOUTHWEST Green Line LRT Extension

CIVIL - VOLUME 4G
LUCE LINE TRAIL BRIDGE
BRIDGE R0696
STAGING PLAN 4

DISCIPLINE: STRUCTURES
SHEET NAME: CBR0696-BRG-SUP-010

SHEET 67 OF 67

Jan, 15 2016 10:13 am V:\3400_ADC\CAD\SEGMENT E4\PLAN SHEETS\STRUCTURES\WNWHT-TRL\CBR0696-BRG-SUP-010.dwg By: Jim.Kimble

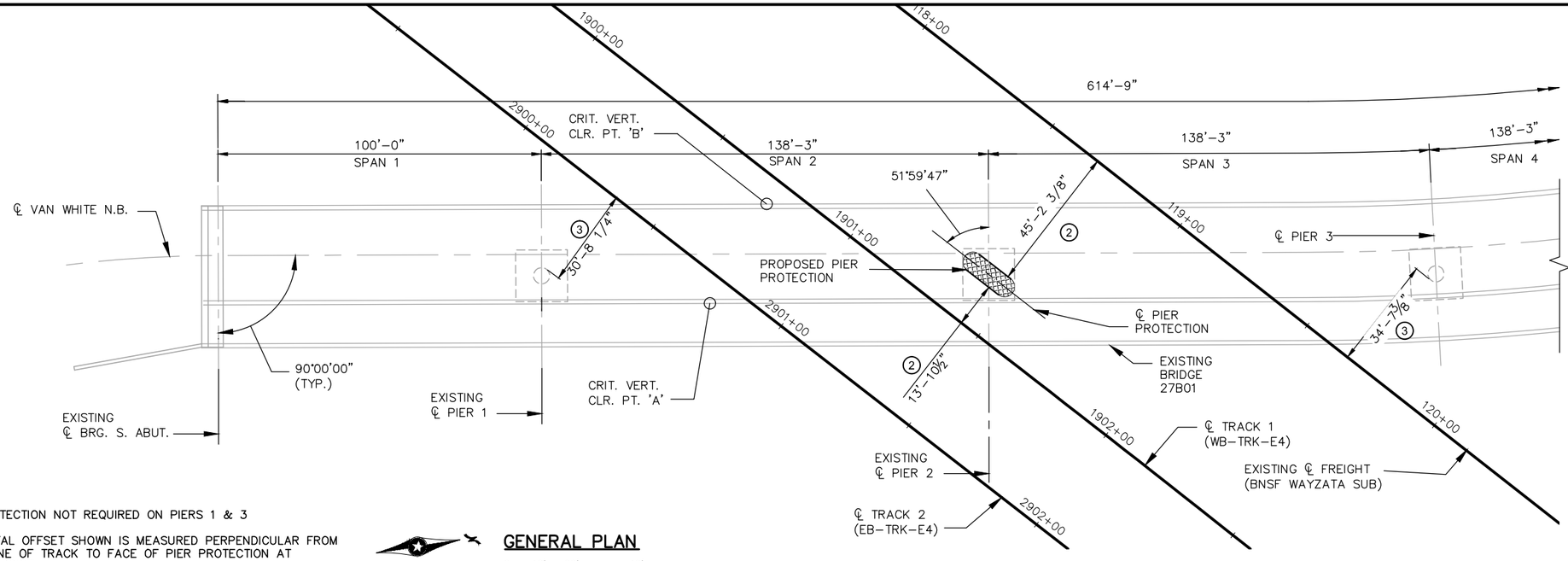

NOTES:

1. PIER PROTECTION NOT REQUIRED ON PIERS 1 & 3
2. HORIZONTAL OFFSET SHOWN IS MEASURED PERPENDICULAR FROM CENTERLINE OF TRACK TO FACE OF PIER PROTECTION AT CLOSEST POINT
3. HORIZONTAL OFFSET SHOWN IS MEASURED PERPENDICULAR FROM CENTERLINE OF TRACK TO FACE OF PIER AT CLOSEST POINT

FOR AESTHETIC DETAIL REFER TO SHEET 5

PROPOSED PIER PROTECTION

GENERAL PLAN

0 10' 20' 40'
SCALE IN FEET

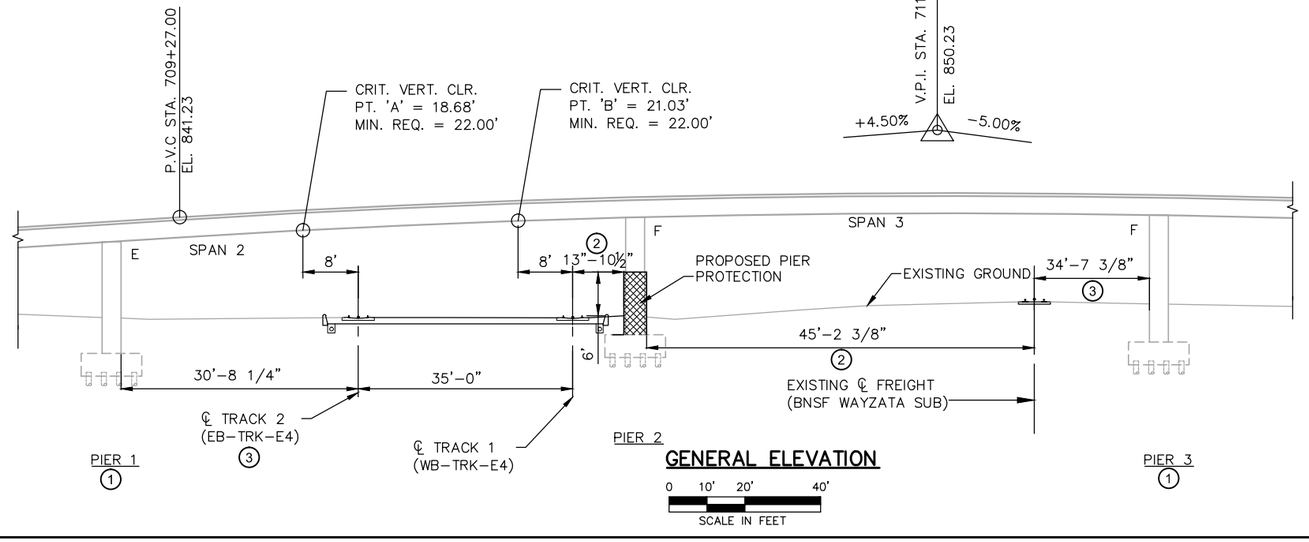

GENERAL ELEVATION

0 10' 20' 40'
SCALE IN FEET

DESIGN DATA

AASHTO LRFD BRIDGE DESIGN SPECIFICATIONS, 7TH EDITION, 2014 WITH 2015 INTERIM REVISIONS.

2014 AREMA MANUAL FOR RAILWAY ENGINEERING

LOAD AND RESISTANCE FACTOR DESIGN METHOD

SOUTHWEST LIGHT RAIL TRANSIT DESIGN CRITERIA (REVISION 4.0)

PIER PROTECTION
MATERIAL DESIGN PROPERTIES:
REINFORCED CONCRETE:
f'c = 4000 PSI n = 8
fy = 60000 PSI REINFORCEMENT

RAILWAY COLLISION LOAD = 600 KIP

ALL REINFORCING STEEL TO BE EPOXY COATED

BRIDGE MODIFIICATIONS
MATERIAL DESIGN PROPERTIES:
REINFORCED CONCRETE:
f'c = 4000 PSI n = 8
ABUTMENTS, PIER COLUMNS & FOOTINGS
f'c = 6000 PSI n = 8
POST-TENSIONED SUPERSTRUCTURE
fy = 60000 PSI REINFORCEMENT

PRESTRESSING STEEL
fpu = 270,000 PSI
(LOW-RELAXATION PRESTRESSING STRANDS)

DESIGN SPEED: OVER = 30 MPH
UNDER = N.A.
DECK AREA 27,389 SQ. FT.

LIST OF SHEETS

NO.	DESCRIPTION
	PIER PROTECTION
1	GENERAL PLAN AND ELEVATION
2	SCHEDULE OF QUANTITIES
3	DETAILS
4	REINFORCEMENT
5	AESTHETIC DETAILS
	SUPERSTRUCTURE MODIFICATIONS
6	EXISTING GENERAL PLAN AND SECTION
7	REMOVAL DETAILS
8	PARAPET REMOVAL AND RAIL DETAILS
9	CONDUIT SYSTEM
10	AS-BUILT BRIDGE DATA

BRIDGE NO. 27B01

VAN WHITE MEMORIAL BOULEVARD NB OVER BNSF TRACKS AND SOUTHWEST LRT 0.1 MILES NORTH OF JUNCTION OF DUNWOODY BOULEVARD AND T.H. 394

18'-8"CAST IN PLACE PIER PROTECTION BARRIER SUPPORTED ON EXISTING FOUNDATION AT PIER 2 AND SUPERSTRUCTURE BRIDGE MODIFICATIONS.

BRIDGE I.D. NO. P07

GENERAL PLAN AND ELEVATION

SEC 28 T 29N R 24W
CITY OF MINNEAPOLIS HENNEPIN COUNTY

JOB NO. T9N635 | STATE PROJECT NO. 9909-01 | MNDOT REVIEW: JOE NIETFELD

NO.	DATE	BY	CHECK	DESIGN	REVISION / SUBMITTAL

DESIGNED BY: AMC CHECKED BY: LKZ
DRAWN BY: EBM CHECKED BY: LKZ

AECOM Kimley»Horn

90% SUBMISSION - 01/22/16

METROPOLITAN COUNCIL
SOUTHWEST Green Line LRT Extension

CIVIL - VOLUME 4G
VAN WHITE MEM. BLVD. (BRIDGE 27B01)
PIER PROTECTION
GENERAL PLAN AND ELEVATION

DISCIPLINE: STRUCTURES
SHEET NAME: EX4-STU-PPR-VWMB-VEH-GPE-001

SHEET 1 OF 10

Jan, 12 2016 04:19 pm V:\3400_ADC\CAD\SEGMENT E4\PLAN SHEETS\STRUCTURES\PIER PROTECTION\EX4-STU-PPR-VWMB-VEH-DTL.dwg By: Edgar.McKoy

SUPERSTRUCTURE MODIFICATIONS NOTES:

NO CUTTING WILL BE PERMITTED UNTIL THE CUTTING LIMITS HAVE BEEN OUTLINED BY THE CONTRACTOR AND APPROVED BY THE ENGINEER. REMOVAL AND RECONSTRUCTION SHALL CONFORM TO SPEC. 2433.

HATCHED AREAS INDICATE AREAS TO BE REMOVED.

PRIOR TO CORE DRILLING THE DECK FOR THE CONDUIT, THE CONTRACTOR SHALL LOCATE THE POST-TENSIONING TENDONS USING GROUND PENETRATING RADAR SO AS TO AVOID THE TENDONS DURING CORING.

SCHEDULE OF QUANTITIES

SPEC. SECTION	ITEM	UNIT	QUANTITY
–	CONSTRUCT PIER PROTECTION AND MODIFICATIONS TO BRIDGE 27B01	LUMP SUM	LS

COMPONENT ITEM SUMMARY (BRIDGE 27B01)

	SPEC. SECTION (2)	COMPONENT ITEM	UNIT (1)	QUANTITY (1)
	2104	REMOVE LIGHT FIXTURE	EACH	
	2401	SPECIAL SURFACE FINISH (COLOR SYSTEM)	SQ. FT.	
	2401	STRUCTURAL CONCRETE (3B52)	CU. YD.	
	2401	REINFORCEMENT BARS (EPOXY COATED)	POUND.	
(5)	2402	ORNAMENTAL METAL RAILING	LIN. FT.	
	2404	CONCRETE WEARING COURSE (3U17A)	SQ. FT.	
	SB-XX	ARCHITECTURAL SURFACE FINISH (SINGLE COLOR)	SQ. FT.	
(3)	2433	REMOVE METAL RAILING	LIN. FT.	
(4)	2433	REMOVE CONCRETE PARAPET	LIN. FT.	
	2433	REMOVE CONCRETE WEARING COURSE	SQ. FT.	
	2433	EPOXY SEALER	SQ. FT.	
	2433	ANCHORAGE, TYPE REINF. BARS	EACH	
	2451	STRUCTURE EXCAVATION CLASS U	CU. YD.	
	2545	CONDUIT SYSTEM	LUMP SUM	

(1) QUANTITIES LISTED FOR THE COMPONENT ITEMS OF THE LUMP SUM CONSTRUCT PIER PROTECTION AND MODIFICATIONS TO BRIDGE 27B01 ITEM ARE FOR INFORMATION PURPOSES. ANY ADDITIONAL ITEMS OR CHANGES IN QUANTITIES REQUIRED SHALL BE PROVIDED BY THE CONTRACTOR WITH NO ADDITIONAL COMPENSATION.

(2) MEASUREMENT AND PAYMENT FOR COMPONENT ITEMS SHALL BE PART OF THE LUMP SUM PAYMENT FOR CONSTRUCT PIER PROTECTION AND MODIFICATIONS TO BRIDGE 27B01. REFER TO MNDOT STANDARD SPECIFICATION OR SPECIAL PROVISION FOR TECHNICAL SPECIFICATION REQUIREMENTS FOR ALL PROVISIONS OTHER THAN MEASUREMENT & PAYMENT REQUIREMENTS.

(3) INCLUDES REMOVAL OF INPLACE METAL RAIL AS INDICATED IN PLANS. LENGTH OF INPLACE METAL RAIL REMOVED WILL VARY DEPENDING ON FIELD LOCATION. QUANTITY SHOWN IS A MAXIMUM VALUE.

(4) INCLUDES REMOVAL OF SPECIFIED SECTIONS OF INPLACE CONCRETE PARAPET.

(5) LENGTH OF METAL RAIL WILL VARY DEPENDING ON FIELD LOCATION OF INPLACE POSTS. QUANTITY SHOWN IS A MAXIMUM VALUE.

CONSTRUCTION NOTES

THE 2016 EDITION OF THE MINNESOTA DEPARTMENT OF TRANSPORTATION "STANDARD SPECIFICATIONS FOR CONSTRUCTION" SHALL GOVERN.

THE BAR SIZES SHOWN IN THIS PLAN ARE IN U.S. CUSTOMARY DESIGNATIONS. THE FIRST DIGIT OR THE FIRST TWO DIGITS OF EACH BAR MARK INDICATE THE BAR SIZE.

BARS MARKED WITH THE SUFFIX "E" SHALL BE EPOXY COATED IN ACCORDANCE WITH SPEC. 3301.

CONTRACTOR SHALL FIELD VERIFY INPLACE BRIDGE ELEVATIONS AND DIMENSIONS

Jan, 12 2016 04:19 pm V:\3400_ADC\CAD\SEGMENT E4\PLAN SHEETS\STRUCTURES\PIER PROTECTION\EX4-STU-PPR-VWMB-VEH-DTL.dwg By: Edgar.McKoy

NO.	DATE	BY	CHECK	DESIGN	REVISION / SUBMITTAL

DESIGNED BY: AMC | CHECKED BY: LKZ
DRAWN BY: EBM | CHECKED BY: LKZ

AECOM Kimley»Horn

90% SUBMISSION - 01/22/16

METROPOLITAN COUNCIL

SOUTHWEST Green Line LRT Extension

CIVIL - VOLUME 4G
VAN WHITE MEM. BLVD. (BRIDGE 27B01)
PIER PROTECTION
SCHEDULE OF QUANTITIES

DISCIPLINE: STRUCTURES
SHEET NAME: EX4-STU-PPR-VWMB-VEH-DTL-002

SHEET 2 OF 10

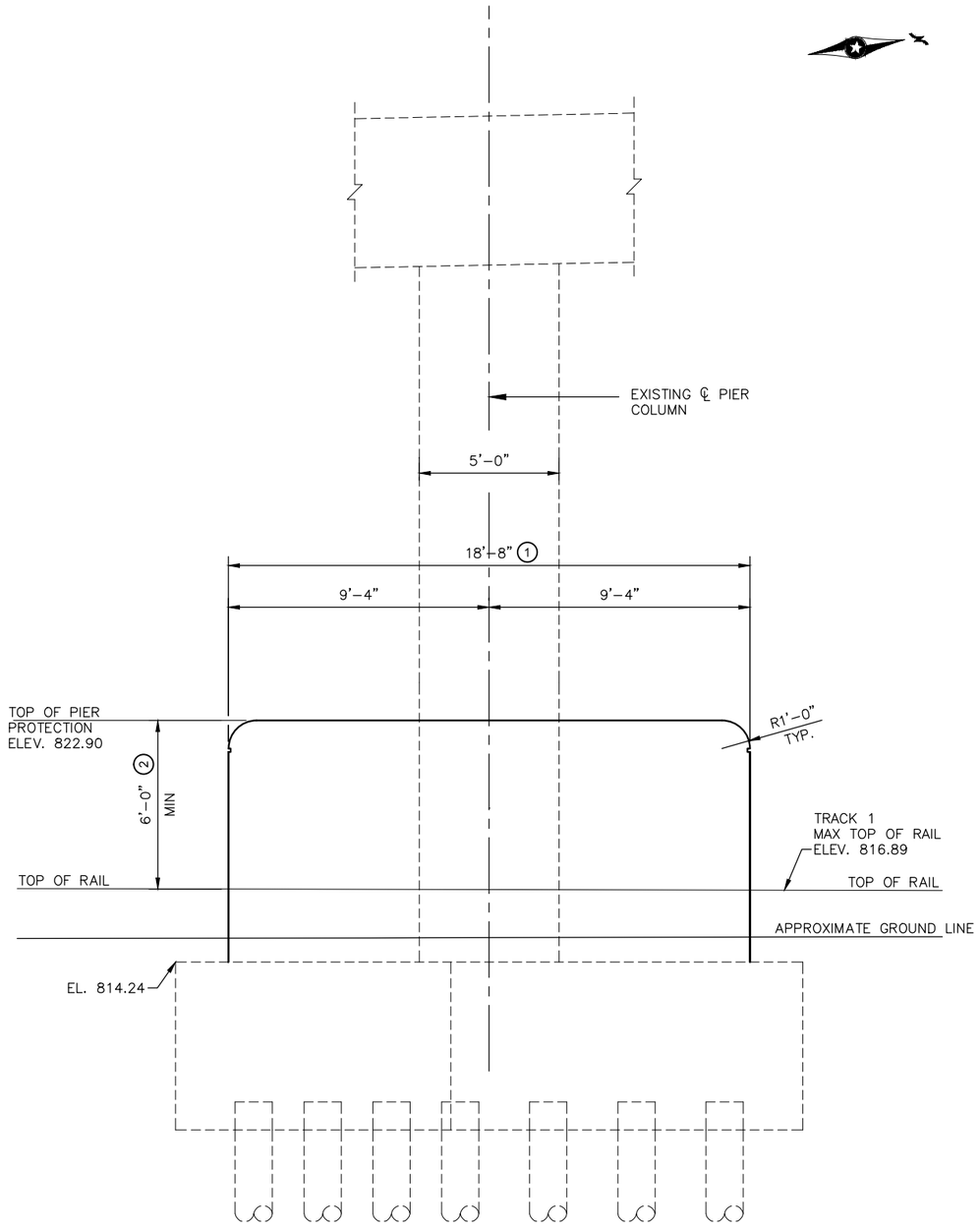

ELEVATION–PIER 2

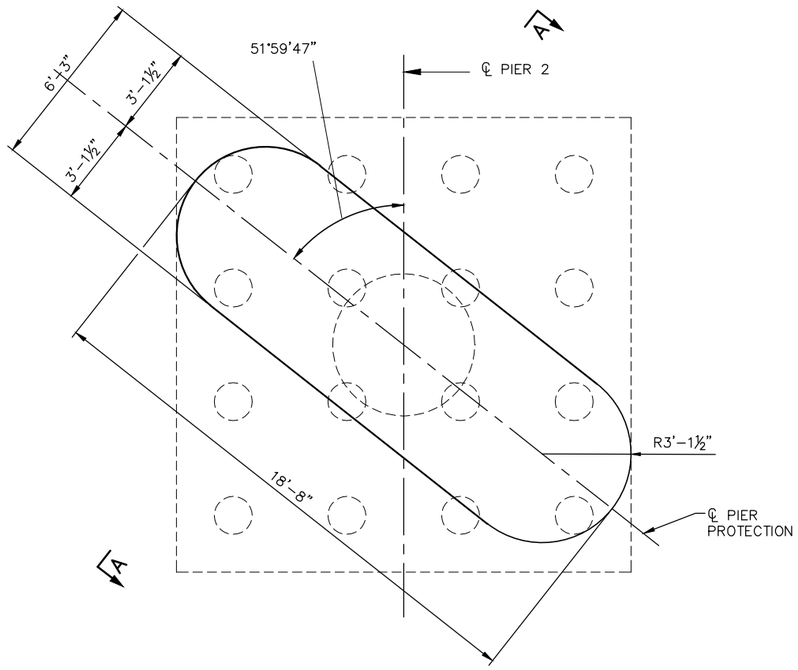

SECTION A–A

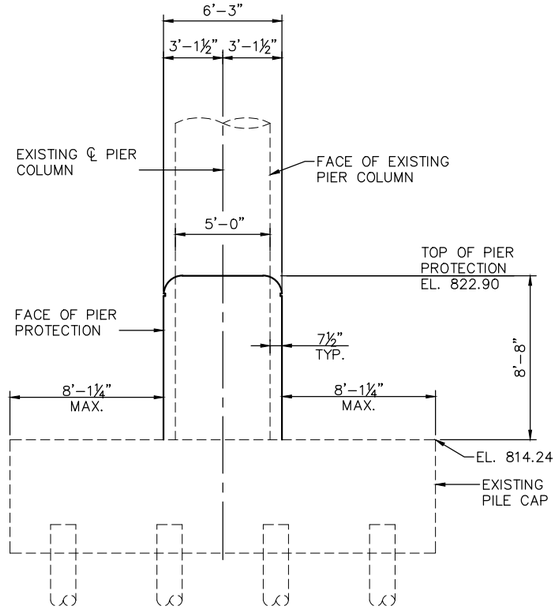

SECTION B–B

NOTES:

FOR AESTHETIC DETAILS REQUIREMENTS REFER TO SHEET 5

① STRUCTURAL CONCRETE(3B52)

② MINIMUM HEIGHT ABOVE MAX TOP OF RAIL

NO.	DATE	BY	CHECK	DESIGN	REVISION / SUBMITTAL

DESIGNED BY: AMC | CHECKED BY: LKZ

DRAWN BY: EBM | CHECKED BY: LKZ

AECOM Kimley»Horn

90% SUBMISSION - 01/22/16

METROPOLITAN COUNCIL

SOUTHWEST Green Line LRT Extension

CIVIL - VOLUME 4G
VAN WHITE MEM. BLVD (BRIDGE 27B01)
PIER PROTECTION
DETAILS

DISCIPLINE: STRUCTURES

SHEET NAME: EX4-STU-PPR-VWMB-VEH-PIR-001

SHEET 3 OF 10

Jan, 12 2016 04:19 pm V:\3400_ADC\CAD\SEGMENT E4\PLAN SHEETS\STRUCTURES\PIER PROTECTION\EX4-STU-PPR-VWMB-VEH-DTL.dwg By: Edgar.McKoy

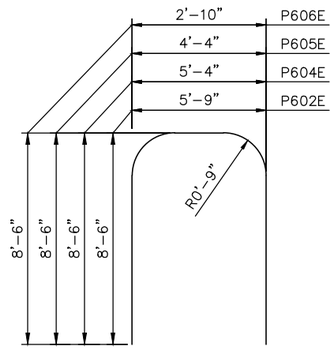

P602E, P604E, P605E, & P606E

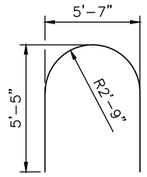

P609E

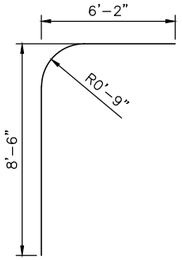

P607E

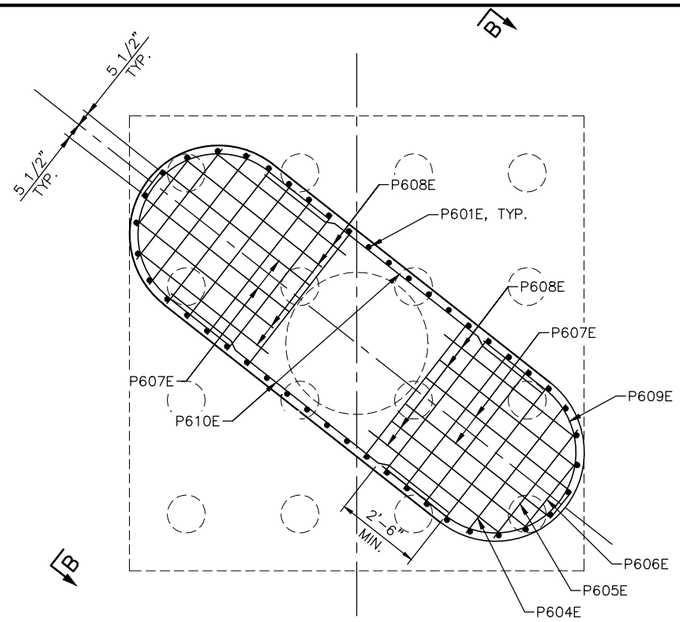

PLAN – PIER 2

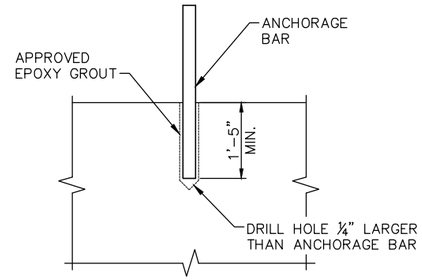

ANCHORAGE DETAIL

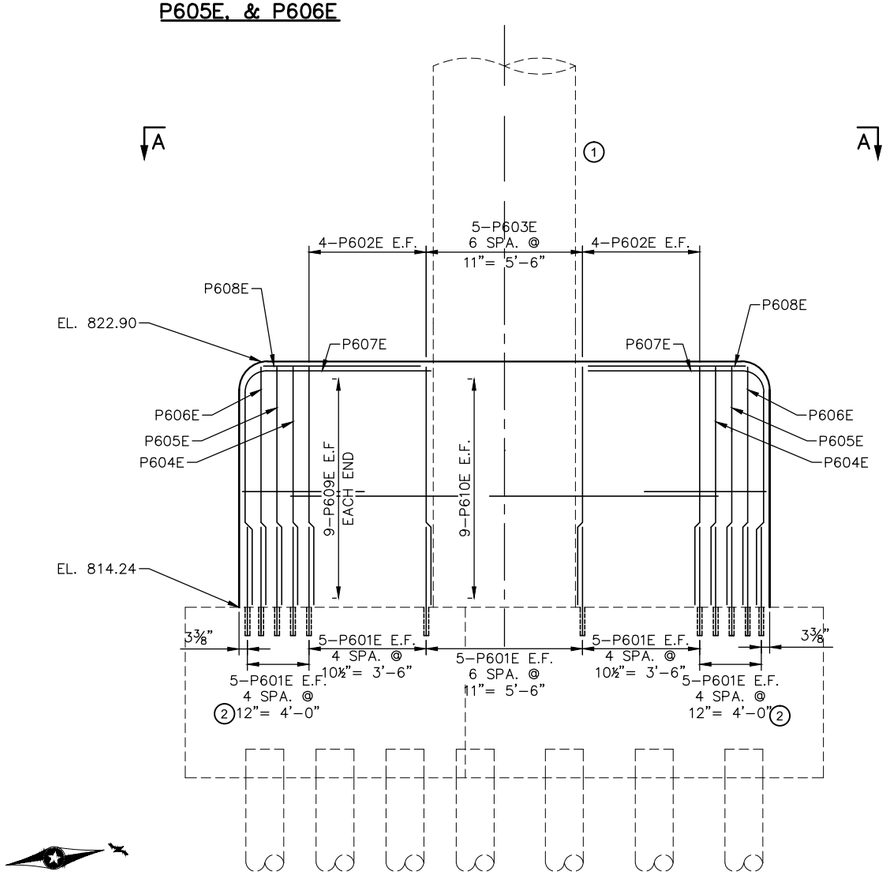

ELEVATION–PIER 2

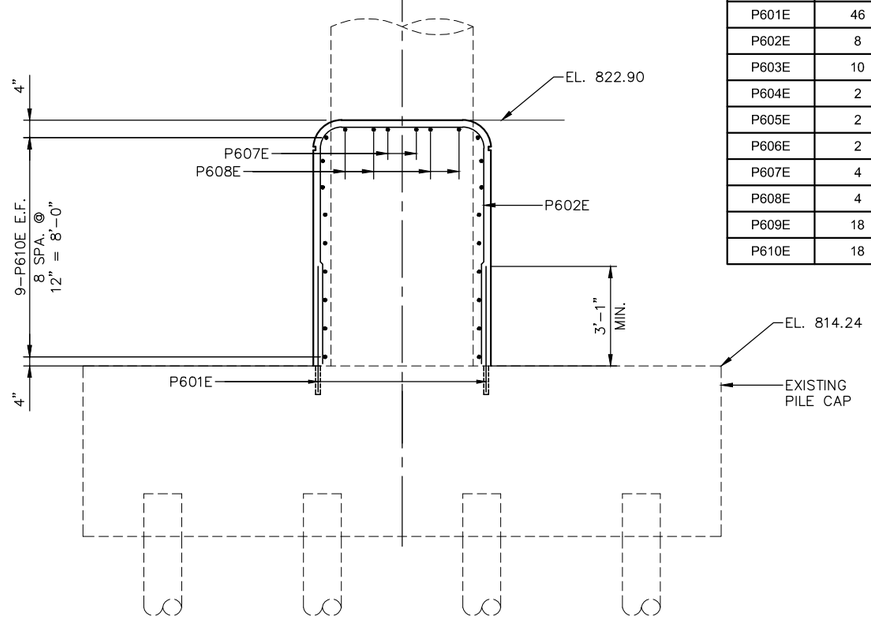

SECTION A–A

BILL OF REINFORCEMENT				
BAR	NO.	LENGTH	SHAPE	LOCATION
P601E	46	4'-7"	STR.	FOOTING ANCHORAGE
P602E	8	22'-1"	BENT	TIE VERTICAL
P603E	10	7'-11"	STR.	BARRIER VERT. E.F.
P604E	2	21'-8"	BENT	TIE VERTICAL
P605E	2	20'-8"	BENT	TIE VERTICAL
P606E	2	19'-2"	BENT	TIE VERTICAL
P607E	4	14'-4"	BENT	BARRIER LONG. TOP CENTER
P608E	4	6'-8"	STR.	BARRIER LONG. TOP CENTER
P609E	18	14'-0"	BENT	TIE HORIZONTAL
P610E	18	12'-5"	STR.	BARRIER LONG. E.F.

NOTES:

FOR AESTHETIC DETAILS REFER TO SHEET 5

1. COAT PIER COLUMN WITH AN APPROVED EPOXY BONDING AGENT
2. MEASURED ALONG CURVE

NO.	DATE	BY	CHECK	DESIGN	REVISION / SUBMITTAL

DESIGNED BY: AMC | CHECKED BY: LKZ
DRAWN BY: EBM | CHECKED BY: LKZ

AECOM Kimley»Horn

90% SUBMISSION - 01/22/16

METROPOLITAN COUNCIL

SOUTHWEST Green Line LRT Extension

CIVIL - VOLUME 4G
VAN WHITE MEM. BLVD (BRIDGE 27B01)
PIER PROTECTION REINFORCEMENT

DISCIPLINE: STRUCTURES

SHEET NAME: EX4-STU-PPR-VWMB-VEH-PIR-002

SHEET 4 OF 10

Jan, 12 2016 04:19 pm V:\3400_ADC\CAD\SEGMENT E4\PLAN SHEETS\STRUCTURES\PIER PROTECTION\EX4-STU-PPR-VWMB-VEH-DTL.dwg By: Edgar.McKoy

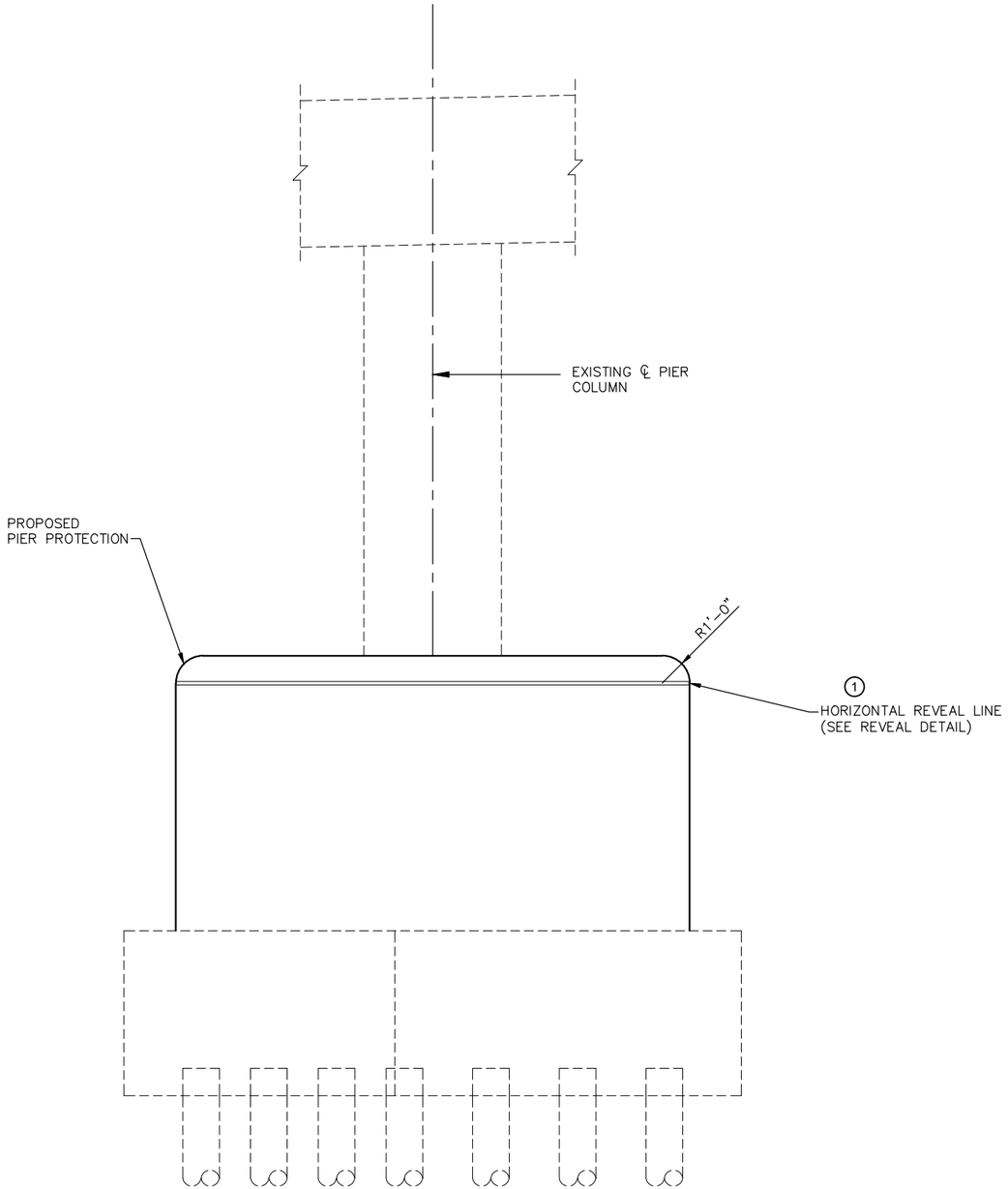

ELEVATION – PIER 2

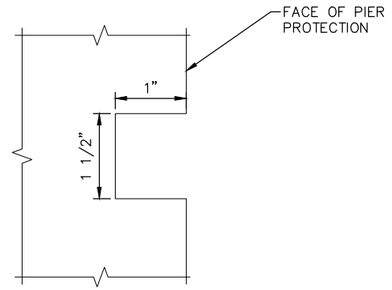

REVEAL DETAIL

NOTES:

1. PROVIDE CONTINUOUS HORIZONTAL REVEAL LINE AND RADIUS AT TOP OF WALL AS SHOWN.

   APPLY SURFACE COATING TO MATCH EXISTING SUBSTRUCTURE COLOR SYSTEM TYPE 2, (FEDERAL COLOR 33717)

NO.	DATE	BY	CHECK	DESIGN	REVISION / SUBMITTAL

DESIGNED BY: AMC | CHECKED BY: LKZ
DRAWN BY: EBM | CHECKED BY: LKZ

AECOM Kimley»Horn

90% SUBMISSION - 01/22/16

METROPOLITAN COUNCIL

SOUTHWEST Green Line LRT Extension

CIVIL - VOLUME 4G
VAN WHITE MEM. BLVD (BRIDGE 27B01)
PIER PROTECTION
AESTHETIC DETAILS

DISCIPLINE: STRUCTURES

SHEET NAME: EX4-STU-PPR-VWMB-VEH-PIR-003

SHEET 5 OF 10

Jan, 12 2016 04:19 pm V:\3400_ADC\CAD\SEGMENT E4\PLAN SHEETS\STRUCTURES\PIER PROTECTION\EX4-STU-PPR-VWMB-VEH-DTL.dwg By: Edgar.McKoy

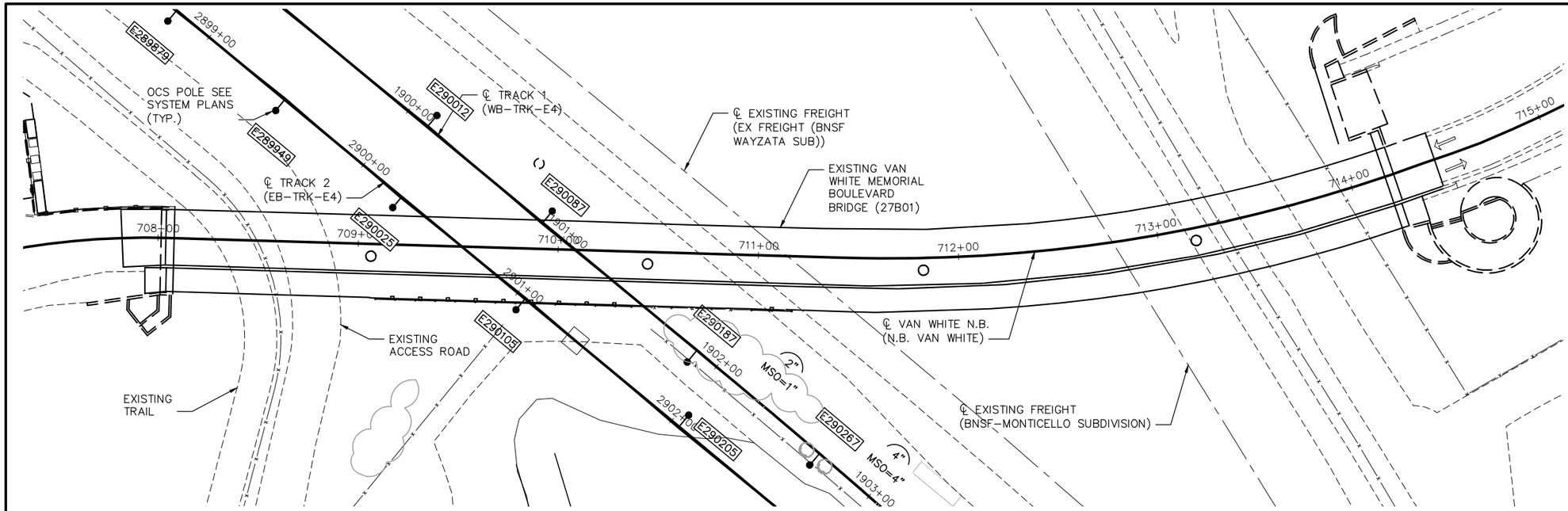

① PER ORIGINAL BRIDGE PLAN DATED 1/12/2012.

GENERAL PLAN – EXISTING CONDITION

GRAPHIC SCALE IN FEET
0 15 30 60

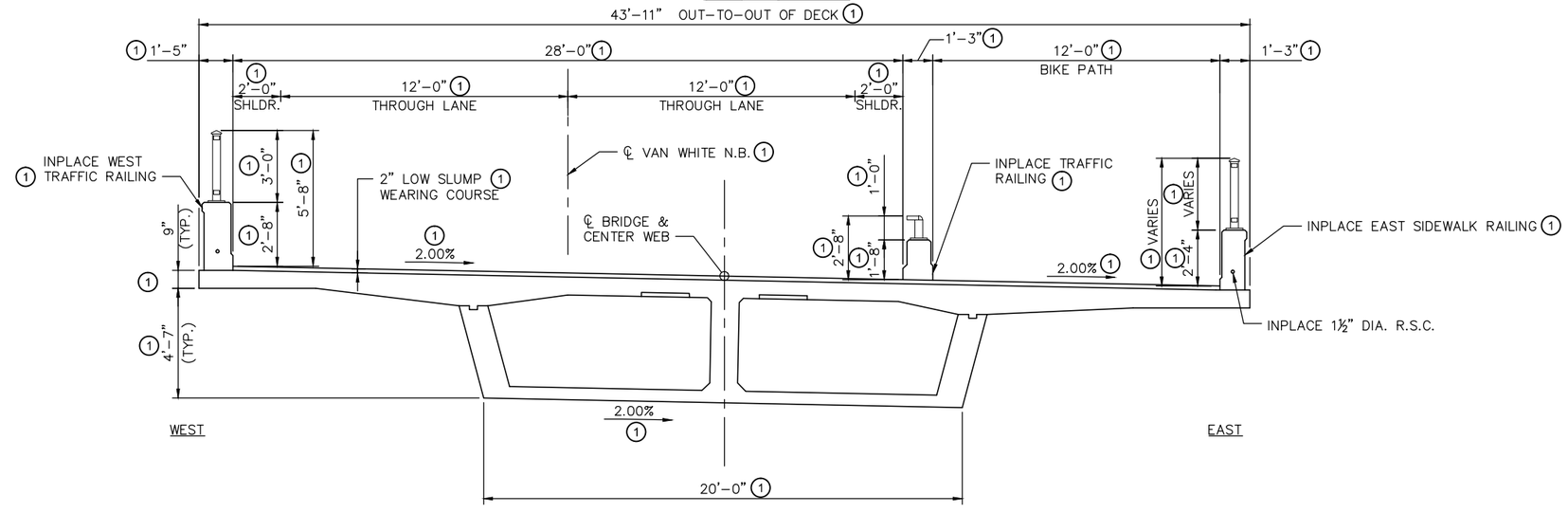

TRANSVERSE SECTION – EXISTING CONDITION

GRAPHIC SCALE IN FEET
0 1.5 3 6

NO.	DATE	BY	CHECK	DESIGN	REVISION / SUBMITTAL

DESIGNED BY: JCW | CHECKED BY: SAD
DRAWN BY: JIK | CHECKED BY: SAD

AECOM Kimley»Horn

90% SUBMISSION - 01/22/16

METROPOLITAN COUNCIL
SOUTHWEST Green Line LRT Extension

CIVIL - VOLUME 4G
VAN WHITE MEM. BLVD. (BRIDGE 27B01)
SUPERSTRUCTURE MODIFICATIONS
EXISTING GENERAL PLAN AND SECTION

DISCIPLINE: STRUCTURES
SHEET NAME: CBR27B01-BRM-GPE-001

SHEET 6 OF 10

Jan, 15 2016 08:30 am V:\3400_ADC\CAD\SEGMENT E4\PLAN SHEETS\STRUCTURES\27B01 MODS\CBR27B01-BRM-GPE-001.dwg By: Jim.Kimble

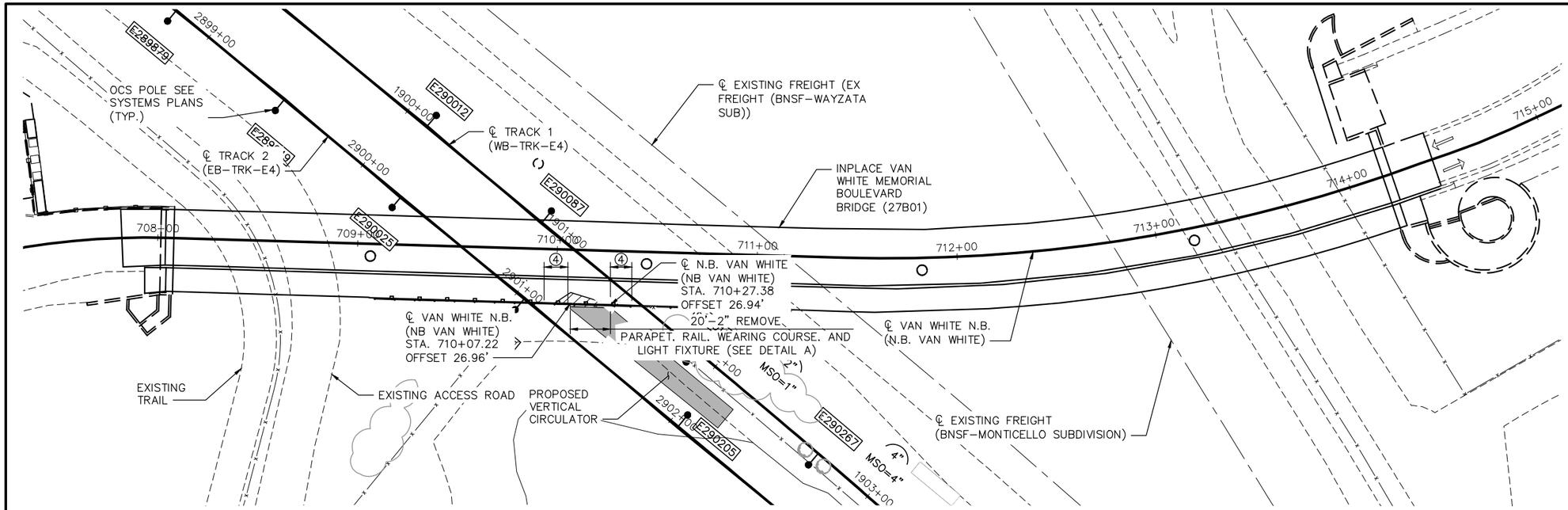

GENERAL PLAN – REMOVALS

GRAPHIC SCALE IN FEET
0 15 30 60

NOTES:

- DENOTES AREAS TO BE REMOVED.
- (1) SEE GENERAL PLAN–REMOVALS FOR LENGTH OF PARAPET AND RAIL REMOVAL.
- (2) VERIFY ANGLE AND LOCATION OF VERTICAL CIRCULATOR AND INPLACE BRIDGE BEFORE CUTS ARE MADE.
- (3) HORIZONTAL AND VERTICAL REINFORCEMENT IN PARAPET SHALL BE CUT FLUSH AT VERTICAL CURB OPENING.
- (4) PROTECTIVE SCREENING TO BE ADDED TO INPLACE RAILING OVER OCS WIRES.

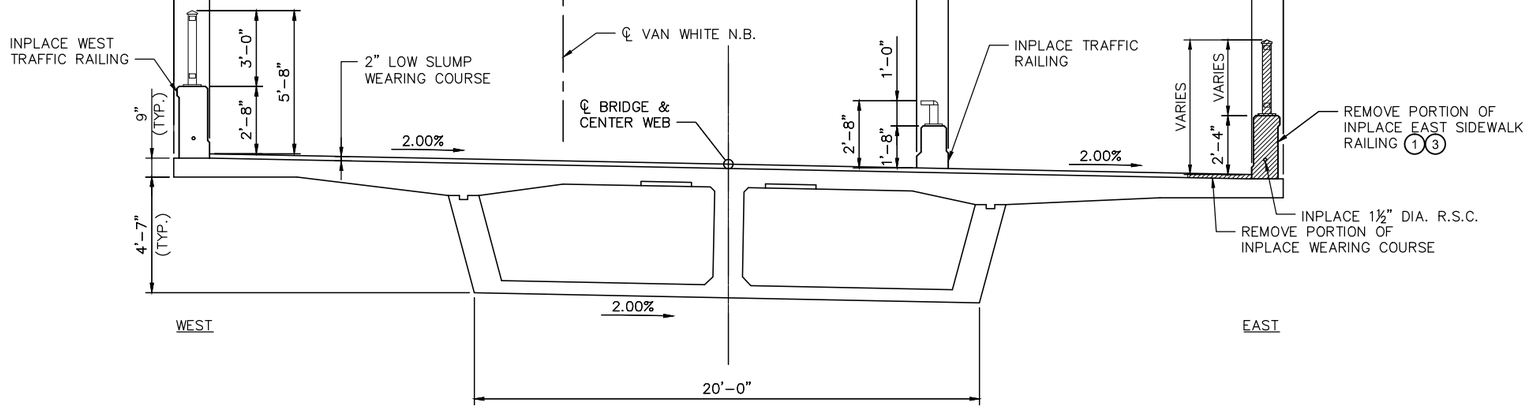

TRANSVERSE SECTION – REMOVALS

GRAPHIC SCALE IN FEET
0 1.5 3 6

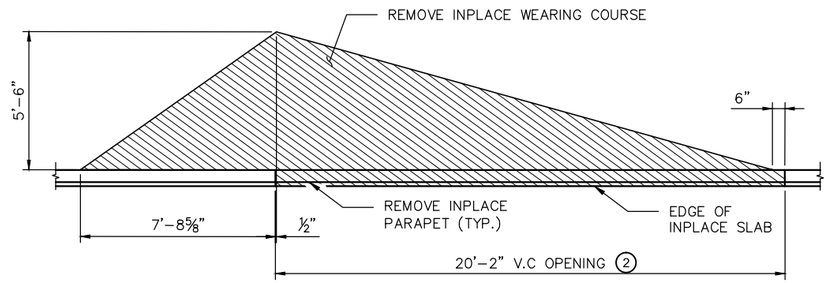

DETAIL A

NO.	DATE	BY	CHECK	DESIGN	REVISION / SUBMITTAL

DESIGNED BY: JCW | CHECKED BY: SAD
DRAWN BY: JIK | CHECKED BY: SAD

AECOM Kimley»Horn

90% SUBMISSION - 01/22/16

METROPOLITAN COUNCIL

SOUTHWEST Green Line LRT Extension

CIVIL - VOLUME 4G
VAN WHITE MEM. BLVD. (BRIDGE 27B01)
SUPERSTRUCTURE MODIFICATIONS
REMOVAL DETAILS

DISCIPLINE: STRUCTURES
SHEET NAME: CBR27B01-BRM-DTL-001

SHEET 7 OF 10

Jan, 15 2016 08:34 am v:\3400_ADC\CAD\SEGMENT E4\PLAN SHEETS\STRUCTURES\27B01 MODS\CBR27B01-BRM-DTL-001.dwg By: Jim.Kimble

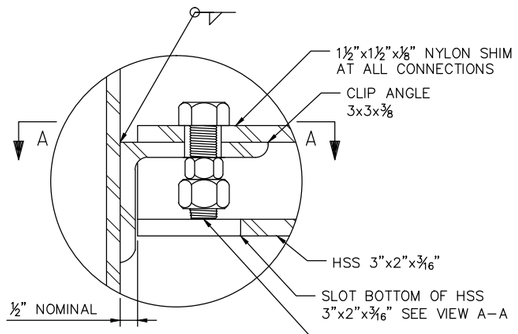

ATTACHMENT DETAIL

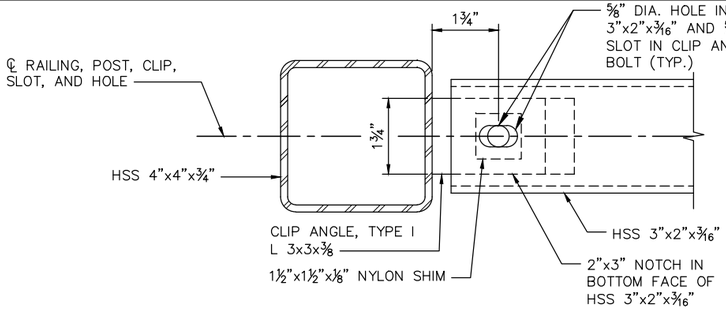

VIEW A–A

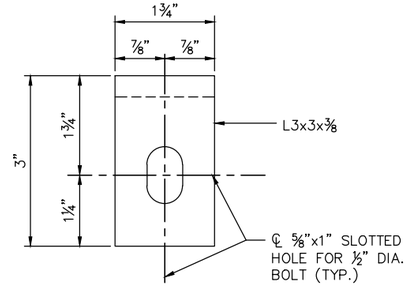

CLIP ANGLE

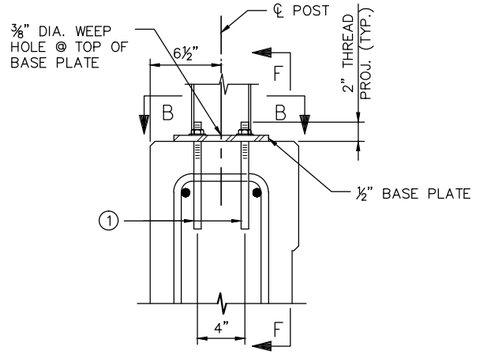

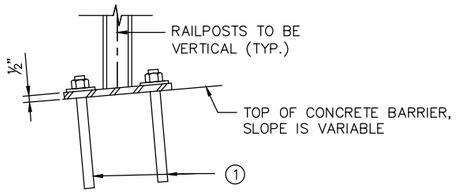

SECTION F–F

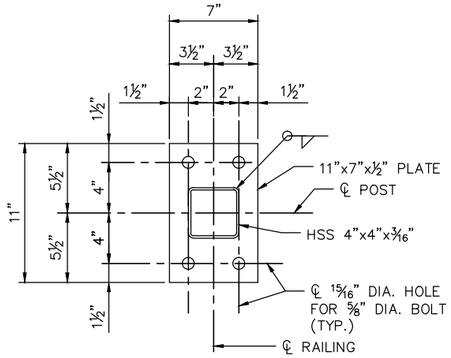

SECTION B–B BASE PLATE

ANCHOR ASSEMBLY DETAILS

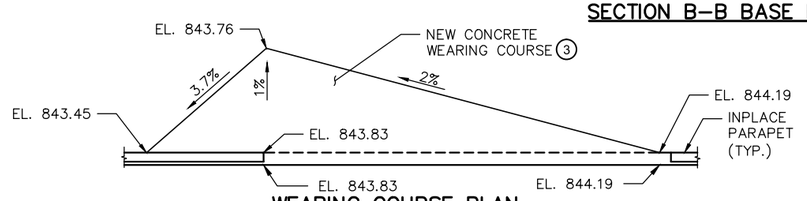

WEARING COURSE PLAN

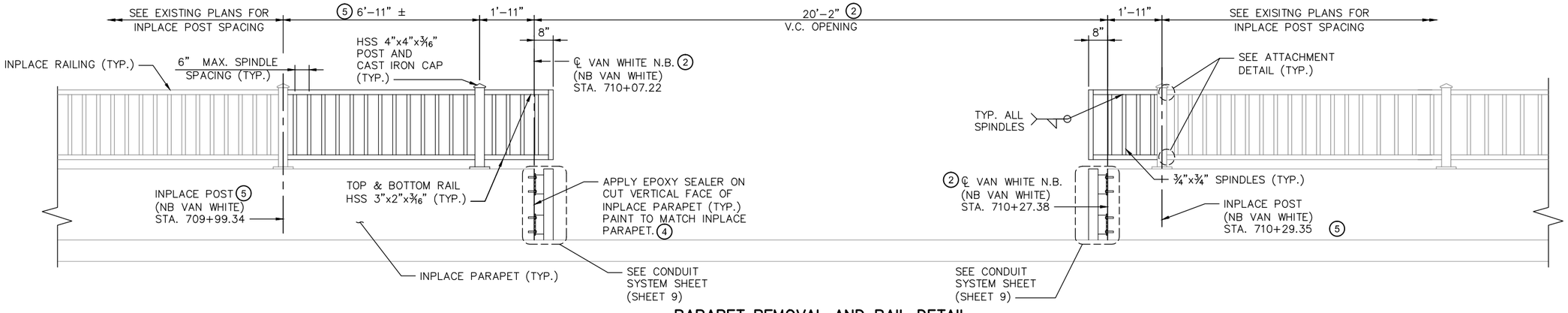

PARAPET REMOVAL AND RAIL DETAIL

NOTES:

REMOVE INPLACE ORNAMENTAL RAIL FROM PARAPET CUT TO CLOSEST INPLACE POST.

INSTALL NEW ORNAMENTAL RAIL TO MATCH EXISTING RAIL WITH A MAXIMUM POST SPACING OF 10'–0".

STRUCTURAL STEEL PER SPEC. 3309. STRUCTURAL TUBES ARE ASTM A500, GRADE B PER SPEC. 3361. FASTENERS PER SPEC. 3391.214.

GALVANIZE BOLTS, NUTS, AND WASHERS PER SPEC. 3392, STRUCTURAL STEEL SHAPES PER SPEC. 3394 AFTER FABRICATION.

RAIL POSTS AND SPINDLES SHALL BE VERTICAL.

HORIZONTAL RAIL MEMBERS SHALL BE PARALLEL TO DECK PROFILE GRADE.

RAILING COLOR TO BE FEDERAL COLOR 14081 (DARK OLIVE). SEE SPECIAL PROVISIONS FOR ADDITIONAL PAINT REQUIREMENTS.

① ADHESIVE ANCHORAGE WITH ⅝" DIA. ANCHOR ROD PER SPEC. 3385, TYPE A WITH HEX HEAD NUT AND WASHER. PROVIDE AN ADHESIVE WITH A MINIMUM CHARACTERISTIC BOND STRENGTH IN UNCRACKED CONCRETE OF 2.0 KSI. EMBED THE ANCHORAGE NO LESS THAN 4" REGARDLESS OF CHARACTERISTIC BOND STRENGTH. DRILL THROUGH REINFORCEMENT (IF ENCOUNTERED) TO ACHIEVE MINIMUM EMBEDMENT. ENSURE HEX NUT IS IN CONTACT WITH THE ADJACENT SURFACE AND TORQUE TO 60 FT–LBS UNLESS A HIGHER TORQUE IS RECOMMENDED BY THE MANUFACTURER. PROOF LOAD TO 5 KIPS. THE ADHESIVE SHALL HAVE A MINIMUM ULTIMATE PULL–OUT STRENGTH OF 10.0 KIPS.

② VERIFY LOCATION OF VERTICAL CIRCULATOR AND INPLACE BRIDGE BEFORE CUTS ARE MADE.

③ REMOVE INPLACE WEARING COURSE AND REPLACE WITH NEW WEARING COURSE TO MATCH ELEVATIONS OF REMAINING WEARING COURSE AND PROPOSED ELEVATIONS AT VERTICAL CIRCULATOR.

④ VERTICAL SURFACE OF CUT PARAPET SHALL RECEIVE SPECIAL SURFACE FINISH (COLOR SYSTEM), TYPE 2 TO MATCH INPLACE PARAPET.

⑤ FIELD VERIFY LOCATION OF INPLACE POST.

NO.	DATE	BY	CHECK	DESIGN	REVISION / SUBMITTAL

DESIGNED BY: JCW | CHECKED BY: SAD
DRAWN BY: JIK | CHECKED BY: SAD

AECOM Kimley»Horn

90% SUBMISSION - 01/22/16

METROPOLITAN COUNCIL

SOUTHWEST Green Line LRT Extension

CIVIL - VOLUME 4G
VAN WHITE MEM. BLVD. (BRIDGE 27B01)
SUPERSTRUCTURE MODIFICATIONS
PARAPET REMOVAL AND RAIL DETAILS

DISCIPLINE: STRUCTURES
SHEET NAME: CBR27B01-BRM-DTL-002

SHEET 8 OF 10

Jan. 15 2016 08:34 am V:\3400_ADC\CAD\SEGMENT E4\PLAN SHEETS\STRUCTURES\27B01 MODS\CBR27B01-BRM-DTL-002.dwg By: Jim.Kimble

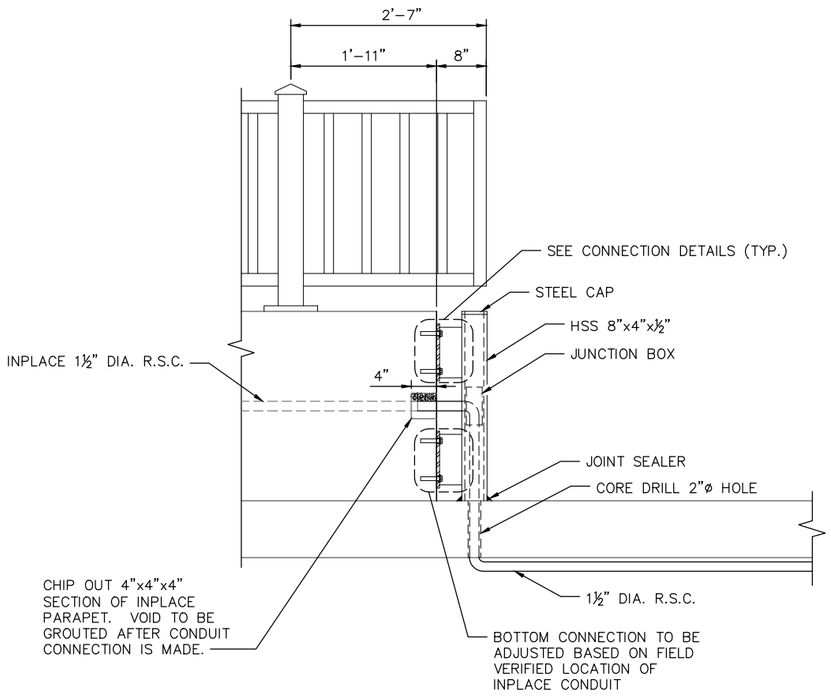

CONDUIT DETAIL – ELEVATION

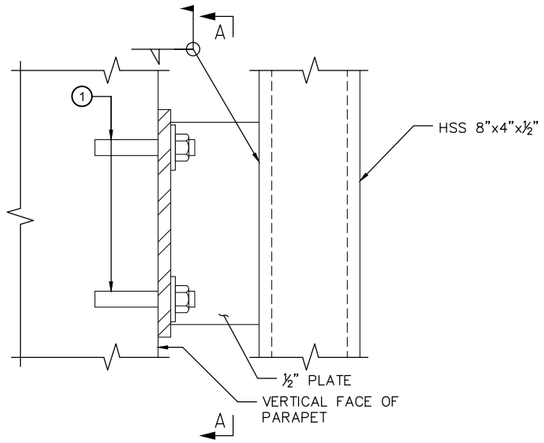

CONNECTION DETAIL

NOTES:

CUT OFF FLOW OF ELECTRICITY BEFORE ANY WORK IS STARTED.

CARE SHALL BE TAKEN NOT TO DAMAGE INPLACE CONDUIT DURING REMOVAL OF INPLACE PARAPET.

BOND AND GROUND THE CONDUIT SYSTEM IN ACCORDANCE WITH THE APPLICABLE PORTIONS OF MnDOT SPEC. 2545.3R.

STRUCTURAL STEEL PER SPEC. 3309. STRUCTURAL TUBES ARE ASTM A500, GRADE B PER SPEC. 3361. FASTENERS PER SPEC. 3391.214.

GALVANIZE BOLTS, NUTS, AND WASHERS PER SPEC. 3392, STRUCTURAL STEEL SHAPES PER SPEC. 3394 AFTER FABRICATION.

(1) ADHESIVE ANCHORAGE WITH ⅝" DIA. ANCHOR ROD PER SPEC. 3385, TYPE A WITH HEX HEAD NUT AND WASHER. PROVIDE AN ADHESIVE WITH A MINIMUM CHARACTERISTIC BOND STRENGTH IN UNCRACKED CONCRETE OF 2.0 KSI. EMBED THE ANCHORAGE NO LESS THAN 4" REGARDLESS OF CHARACTERISTIC BOND STRENGTH. DRILL THROUGH REINFORCEMENT (IF ENCOUNTERED) TO ACHIEVE MINIMUM EMBEDMENT. ENSURE HEX NUT IS IN CONTACT WITH THE ADJACENT SURFACE AND TORQUE TO 60 FT–LBS UNLESS A HIGHER TORQUE IS RECOMMENDED BY THE MANUFACTURER. PROOF LOAD TO 5 KIPS. THE ADHESIVE SHALL HAVE A MINIMUM ULTIMATE PULL–OUT STRENGTH OF 10.0 KIPS.

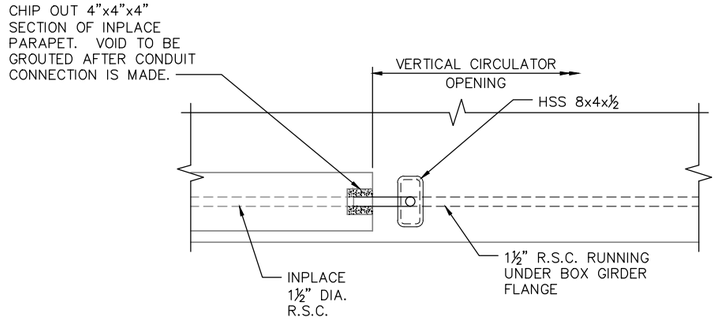

CONDUIT DETAIL – PLAN

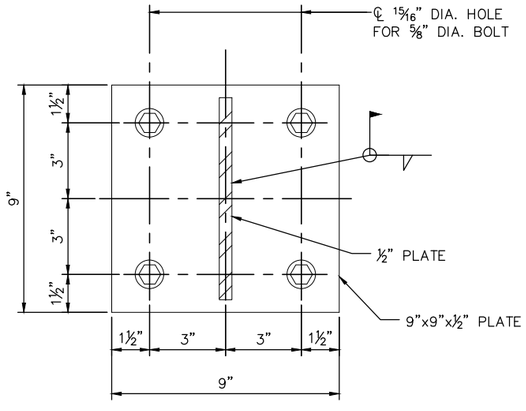

SECTION A–A BASE PLATE

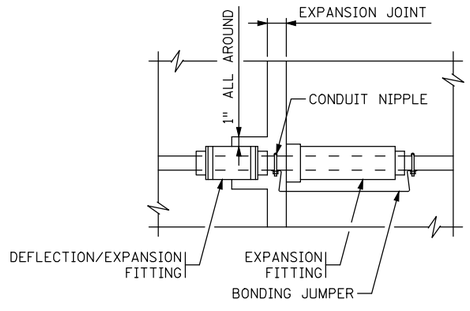

COMBINATION DEFLECTION/EXPANSION FITTING

NO.	DATE	BY	CHECK	DESIGN	REVISION / SUBMITTAL

DESIGNED BY: JCW CHECKED BY: SAD
DRAWN BY: JIK CHECKED BY: SAD

AECOM Kimley»Horn

90% SUBMISSION - 01/22/16

METROPOLITAN COUNCIL

SOUTHWEST Green Line LRT Extension

CIVIL - VOLUME 4G
VAN WHITE MEM. BLVD. (BRIDGE 27B01)
SUPERSTRUCTURE MODIFICATIONS
CONDUIT SYSTEM

DISCIPLINE: STRUCTURES
SHEET NAME: CBR27B01-BRM-DTL-003

SHEET 9 OF 10

Jan. 15 2016 08:34 am V:\3400_ADC\CAD\SEGMENT E4\PLAN SHEETS\STRUCTURES\27B01 MODS\CBR27B01-BRM-DTL-003.dwg By: Jim.Kimble

CONCRETE WEARING COURSE

☐ LOW SLUMP

☐ OTHER _____
TYPE OR MANUFACTURER

EXPANSION JOINTS

JOINT MANUFACTURER

MANUFACTURER'S IDENTIFICATION _____
MFR'S No. AND/OR LETTER DESIGNATION FOR JOINT USED

GLAND MANUFACTURER _____
NAME AND ADDRESS (CITY, STATE)

SIZE OF GLAND _____

MANUFACTURER'S IDENTIFICATION _____
MFR'S No. AND/OR LETTER DESIGNATION FOR GLAND USED

ELASTOMERIC BEARING PADS

PAD MANUFACTURER _____
NAME AND ADDRESS (CITY, STATE)

SPECIAL SURFACE FINISH

SYSTEM: _____ COLOR: _____

FINISHING ROADWAY FACES OF BARRIER RAILING

TYPE: _____ COLOR: _____

ANTI-GRAFFITI COATING

MANUFACTURER _____
NAME AND ADDRESS (CITY, STATE)

PRODUCT NAME: _____ LOCATION: _____

PAINT SYSTEM

Mn/DOT SPECIFICATION NUMBER _____
2478 OR 2479 OR OTHER

MANUFACTURER _____
NAME AND ADDRESS (CITY, STATE)

PRIME COAT _____
Mn/DOT MATERIAL SPECIFICATION NUMBER

INTERMEDIATE COAT _____
Mn/DOT MATERIAL SPECIFICATION NUMBER

FINISH COAT _____ _____
Mn/DOT MATERIAL SPECIFICATION NUMBER COLOR

PLAN QUALITY

RATE 1 (AGREE), 2 (NEUTRAL), OR 3 (DISAGREE, PLEASE COMMENT BELOW)

DIMENSIONING AND DETAILING ADEQUATELY DESCRIBED REQUIRED CONSTRUCTION. _____
BAR LISTS AND QUANTITIES WERE TYPICALLY COMPLETE AND FREE OF ERRORS. _____
SCALE OF DRAWINGS AND OVERALL LEGIBILITY OF LINES AND TEXT WAS GOOD. _____
(SB) SPECIAL PROVISIONS ADEQUATELY DESCRIBED SPECIAL WORK AND PAYMENT. _____

COMMENTS: _____

NUMBER OF BRIDGE
SUPPLEMENTAL AGREEMENTS: _____ COST: $ _____

LIST SIGNIFICANT ERRORS OR OMISSIONS IN PLAN DETAILS OR PAY QUANTITIES IN THE SPACE PROVIDED AT RIGHT.

BRIDGE REMOVAL / BRIDGE OPENING

NUMBER OF AND DATE OLD BRIDGE WAS REMOVED (IF APPLICABLE):

BRIDGE NUMBER _____ DATE REMOVED _____

DATE NEW BRIDGE WAS OPENED TO TRAFFIC _____

NOTIFY THE BRIDGE OFFICE BRIDGE MANAGEMENT UNIT WITH THIS INFORMATION AS SOON AS POSSIBLE. (651) 366-4557

OTHER ITEMS ①

① UTILITIES ADDED DURING CONSTRUCTION AND SPECIALTY ITEMS.

FINAL QUANTITIES ENTERED ON SCHEDULE OF QUANTITIES: YES ☐ NO ☐

SUMMARY OF SIGNIFICANT AS-BUILT CHANGES

THE AS-BUILT INFORMATION WAS ADDED TO THE PLAN BY:

_____ _____
INSPECTOR(S) SIGNATURE DATE

CHECKED BY: _____ _____
PROJECT ENGINEER/SUPERVISOR SIGNATURE DATE

AT THE TIME OF THE FINAL, THIS COMPLETED AS-BUILT BRIDGE DATA SHEET MUST BE SUBMITTED TO THE BRIDGE OFFICE - ATTN: REGIONAL CONSTRUCTION ENGINEER (MS610).

REVISION: 10-28-2008

APPROVED: SEPTEMBER 26, 2003
Daniel T. Worgum
STATE BRIDGE ENGINEER

AS-BUILT DETAILS
(AS NEEDED)

FIG. 5-397.900

TITLE: AS-BUILT BRIDGE DATA

DES:	DR:	APPROVED:	BRIDGE NO.
CHK:	CHK:		27B01

SHEET NO. 10 OF 10 SHEETS

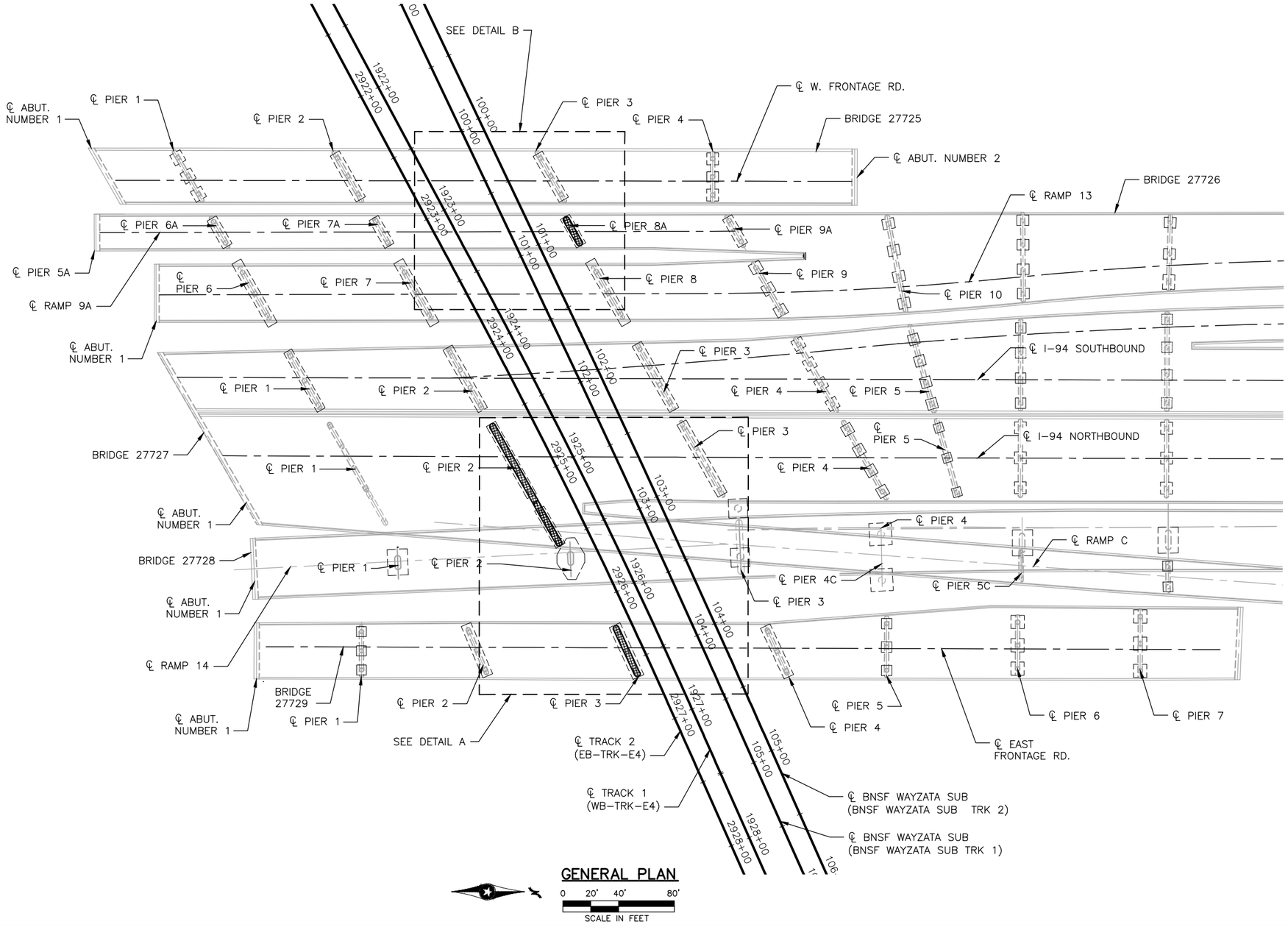

GENERAL PLAN

0 20' 40' 80'

SCALE IN FEET

DESIGN DATA

AASHTO LRFD BRIDGE DESIGN SPECIFICATIONS, 7TH EDITION, 2014 WITH 2015 INTERIM REVISIONS.

2014 AREMA MANUAL FOR RAILWAY ENGINEERING

LOAD AND RESISTANCE FACTOR DESIGN METHOD

SOUTHWEST LIGHT RAIL TRANSIT DESIGN CRITERIA (REVISION 4.0)

MATERIAL DESIGN PROPERTIES:
REINFORCED CONCRETE:
f'c = 4000 PSI n = 8
fy = 60000 PSI REINFORCEMENT

ALL REINFORCEMENT STEEL TO BE EPOXY COATED

RAILWAY COLLISION LOAD = 600 KIPS

LIST OF SHEETS

NO.	DESCRIPTION
1	GENERAL PLAN
2	GENERAL ELEVATION AND DETAILS
3	BRIDGE 27726 DETAILS
4	BRIDGE 27726 REINFORCEMENT
5	BRIDGE 27726 AESTHETIC DETAILS
6-7	BRIDGE 27727 DETAILS
8-9	BRIDGE 27727 REINFORCEMENT
10	BRIDGE 27727 AESTHETIC DETAILS
11	BRIDGE 27729 DETAILS
12	BRIDGE 27729 REINFORCEMENT
13	BRIDGE 27729 AESTHETIC DETAILS

NOTES:

PROPOSED PIER PROTECTION

BRIDGES 27725-27729

WEST FRONTAGE ROAD, RAMP 9A, RAMP 13, I-94, RAMP 14, RAMP C, AND EAST FRONTAGE ROAD OVER BNSF RR AND SOUTHWEST LRT. 0.4 MILES SOUTH OF JCT. T.H. 55 & I-94.

CAST IN PLACE CONCRETE PIER PROTECTION BARRIER SUPPORTED ON EXISTING FOUNDATIONS ON PIER 8A OF BR. 27726 AND PIER 2 & 2E OF BR. 27727 AND PIER 3 OF BR. 27729.

BRIDGE I.D. NO. 401

GENERAL PLAN

SEC 22 T 29N R 24W
CITY OF MINNEAPOLIS HENNEPIN COUNTY

JOB NO. T9N635 | STATE PROJECT NO. 9909-01 | MNDOT REVIEW: JOE NIETFELD

NO.	DATE	BY	CHECK	DESIGN	REVISION / SUBMITTAL

DESIGNED BY: AMC | CHECKED BY: LKZ
DRAWN BY: CAD | CHECKED BY: LKZ

AECOM Kimley»Horn

90% SUBMISSION - 01/22/16

METROPOLITAN COUNCIL | SOUTHWEST Green Line LRT Extension

CIVIL - VOLUME 4G
I-94 (BRIDGES 27725-27729)
PIER PROTECTION
GENERAL PLAN

DISCIPLINE: STRUCTURES

SHEET NAME: EX4-STU-PPR-ALL94-VEH-GPE-001

SHEET 1 OF 13

Jan, 12 2016 04:21 pm V:\3400_ADC\CAD\SEGMENT E4\PLAN SHEETS\STRUCTURES\PIER PROTECTION\EX4-STU-PPR-ALL94-VEH-DTL.dwg By: Edgar.McKoy

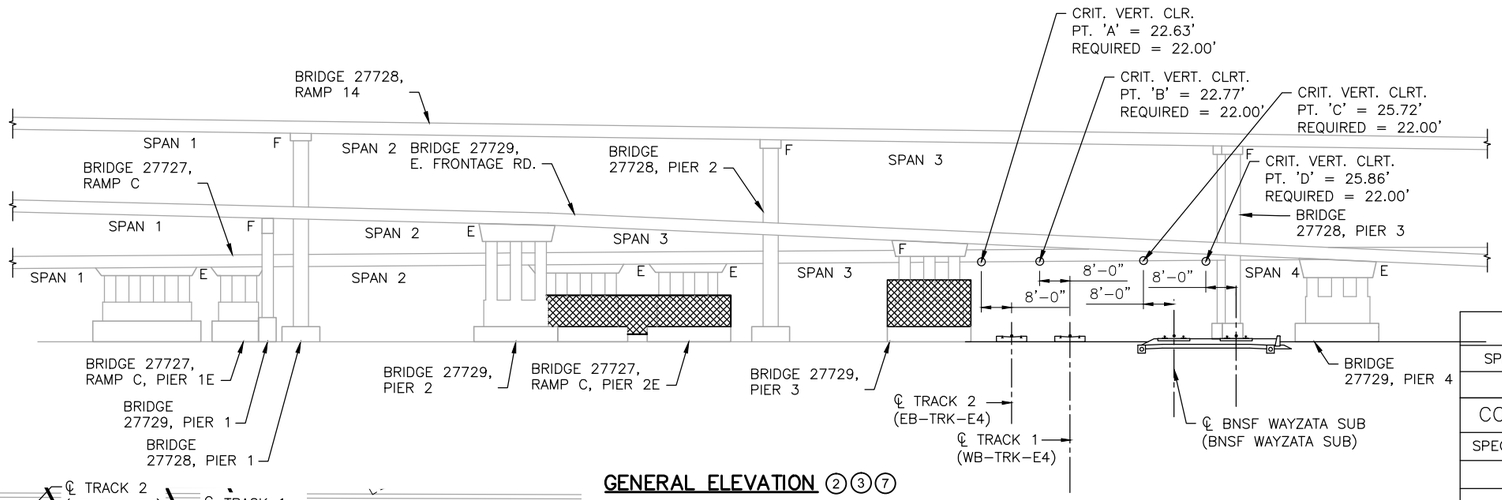

GENERAL ELEVATION ②③⑦

0 10 20 40
SCALE IN FEET

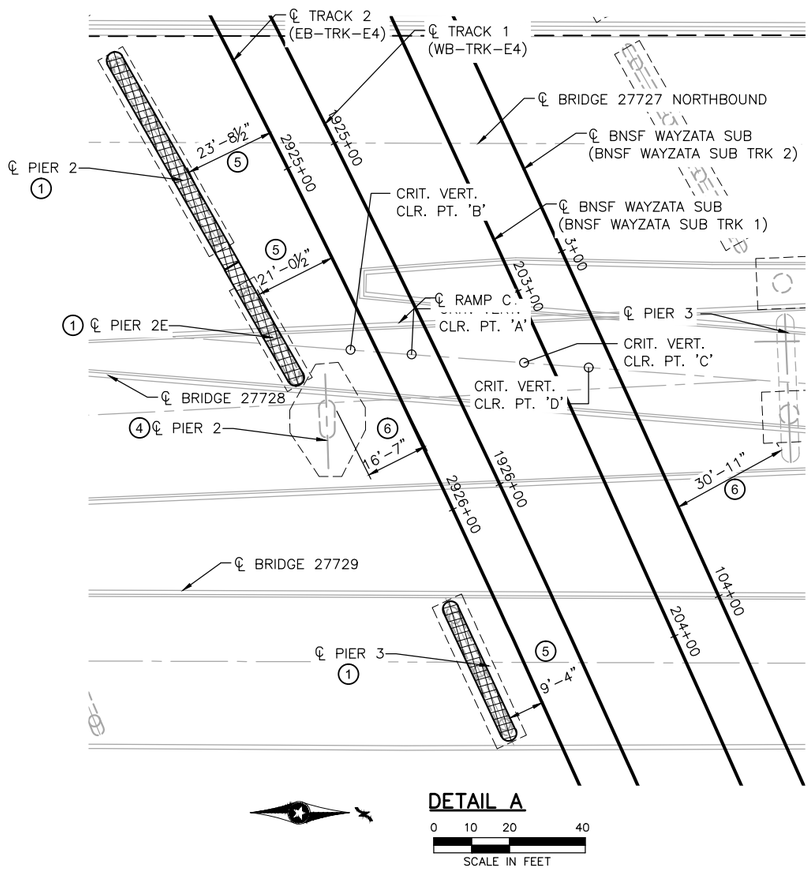

DETAIL A

0 10 20 40
SCALE IN FEET

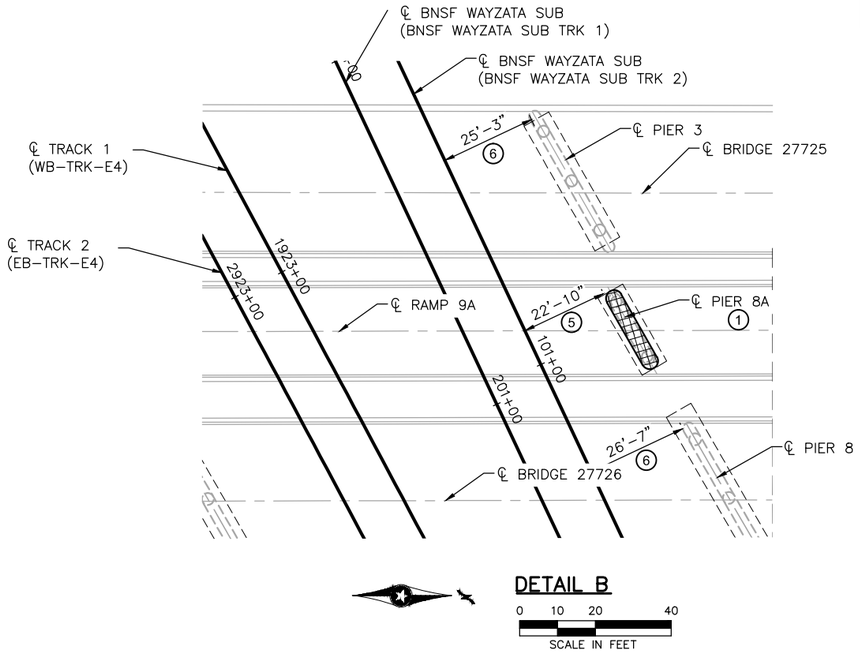

DETAIL B

0 10 20 40
SCALE IN FEET

CONSTRUCTION NOTES

THE 2016 EDITION OF THE MINNESOTA DEPARTMENT OF TRANSPORTATION "STANDARD SPECIFICATIONS FOR CONSTRUCTION" SHALL GOVERN.

THE BAR SIZES SHOWN IN THIS PLAN ARE IN U.S. CUSTOMARY DESIGNATIONS. THE FIRST DIGIT OR THE FIRST TWO DIGITS OF EACH BAR MARK INDICATE THE BAR SIZE.

BARS MARKED WITH THE SUFFIX "E" SHALL BE EPOXY COATED IN ACCORDANCE WITH SPEC. 3301.

CONTRACTOR SHALL FIELD VERIFY INPLACE BRIDGE ELEVATIONS AND DIMENSIONS

NO CUTTING WILL BE PERMITTED UNTIL THE CUTTING LIMITS HAVE BEEN OUTLINED BY THE CONTRACTOR AND APPROVED BY THE ENGINEER. REMOVAL AND RECONSTRUCTION SHALL CONFORM TO SPEC. 2433.

SCHEDULE OF QUANTITIES			
SPEC. SECTION	ITEM	UNIT	QUANTITY
–	I-94 BRIDGES PIER PROTECTION	LUMP SUM	LS

COMPONENT ITEM SUMMARY (I-94 BRIDGES PIER PROTECTION)			
SPEC. SECTION (2)	COMPONENT ITEM	UNIT (1)	QUANTITY (1)
2401	STRUCTURAL CONCRETE (3B52)	CU YD	
2401	REINFORCEMENT BARS (EPOXY COATED)	POUND	
2411	ARCHITECTURAL CONCRETE TEXTURE	SQ FT	
2451	STRUCTURE EXCAVATION CLASS U	CU YD	
2433	ANCHORAGE, TYPE REINF. BARS	EACH	
2433	STRUCTURE REMOVALS	LUMP SUM	

(1) QUANTITIES LISTED FOR THE COMPONENT ITEMS OF THE LUMP SUM CONSTRUCT I-94 BRIDGES PIER PROTECTION ITEM ARE FOR INFORMATION PURPOSES. ANY ADDITIONAL ITEMS OR CHANGES IN QUANTITIES REQUIRED SHALL BE PROVIDED BY THE CONTRACTOR WITH NO ADDITIONAL COMPENSATION.

(2) MEASUREMENT AND PAYMENT FOR COMPONENT ITEMS SHALL BE PART OF THE LUMP SUM PAYMENT FOR CONSTRUCT I-94 BRIDGES PIER PROTECTION. REFER TO MNDOT STANDARD SPECIFICATION OR SPECIAL PROVISION FOR TECHNICAL SPECIFICATION REQUIREMENTS FOR ALL PROVISIONS OTHER THAN MEASUREMENT & PAYMENT REQUIREMENTS.

NOTES:

1. PIER PROTECTION ONLY REQUIRED ON PIERS 2 & 2E OF BRIDGE 27727, PIER 8A OF BRIDGE 27726, AND PIER 3 OF BRIDGE 27729
2. HORIZONTAL OFFSETS AND MINIMUM PIER PROTECTION HEIGHTS ARE NOT SHOWN DUE TO ELEVATION ANGLE
3. ELEVATION VIEW DEVELOPED ALONG POINT OF CRITICAL VERTICAL CLEARANCE
4. PIER IS OF HEAVY CONSTRUCTION. PIER PROTECTION IS NOT REQUIRED BY ANALYSIS
5. HORIZONTAL OFFSET SHOWN IS MEASURED PERPENDICULAR FROM CENTERLINE OF TRACK TO FACE OF PIER PROTECTION AT CLOSEST POINT
6. HORIZONTAL OFFSET SHOWN IS MEASURED PERPENDICULAR FROM CENTERLINE OF TRACK TO FACE OF PIER AT CLOSEST POINT
7. GROUND LINE SHOWN APPROXIMATE

PROPOSED PIER PROTECTION

NO.	DATE	BY	CHECK	DESIGN	REVISION / SUBMITTAL

DESIGNED BY: AMC | CHECKED BY: LKZ
DRAWN BY: CAD | CHECKED BY: LKZ

AECOM Kimley»Horn

90% SUBMISSION - 01/22/16

METROPOLITAN COUNCIL

SOUTHWEST Green Line LRT Extension

CIVIL - VOLUME 4G
I-94 (BRIDGES 27725-27729)
PIER PROTECTION
GENERAL ELEVATION AND DETAILS

DISCIPLINE: STRUCTURES
SHEET NAME: EX4-STU-PPR-ALL94-VEH-GPE-002

SHEET 2 OF 13

Jan, 12 2016 04:21 pm V:\3400_ADC\CAD\SEGMENT E4\PLAN SHEETS\STRUCTURES\PIER PROTECTION\EX4-STU-PPR-ALL94-VEH-DTL.dwg By: Edgar.McKoy

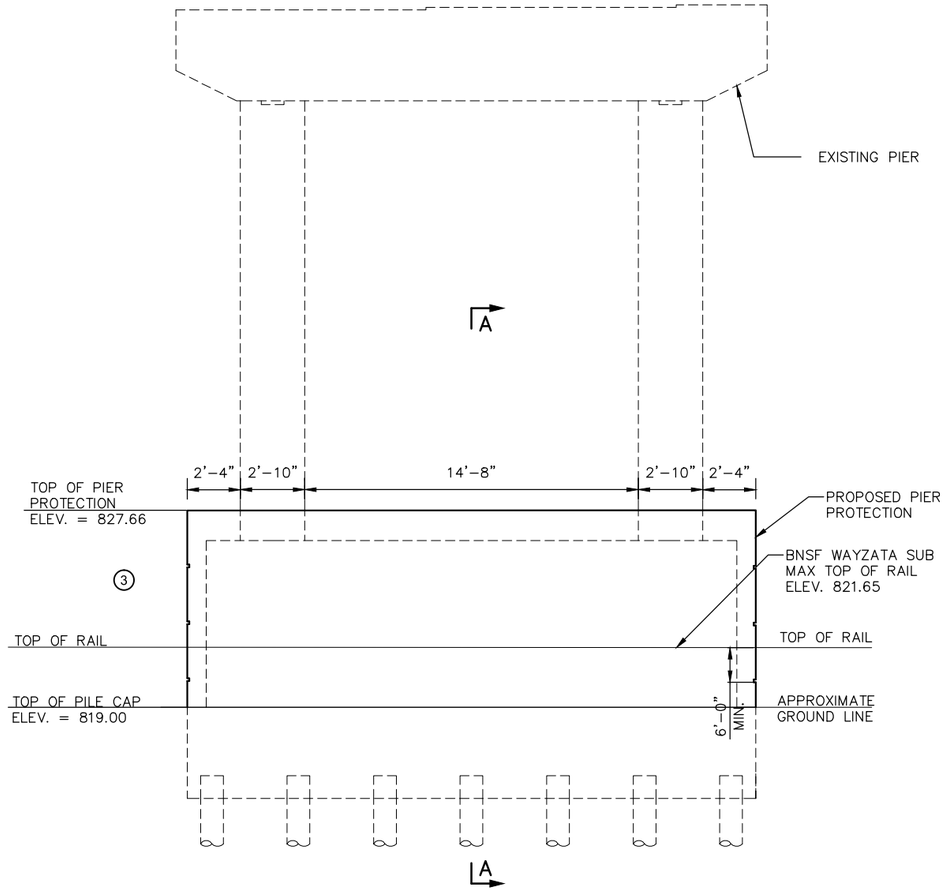

ELEVATION – PIER 8A

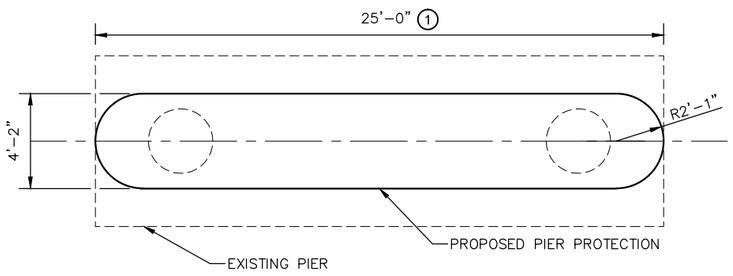

PLAN–PIER 8A 2

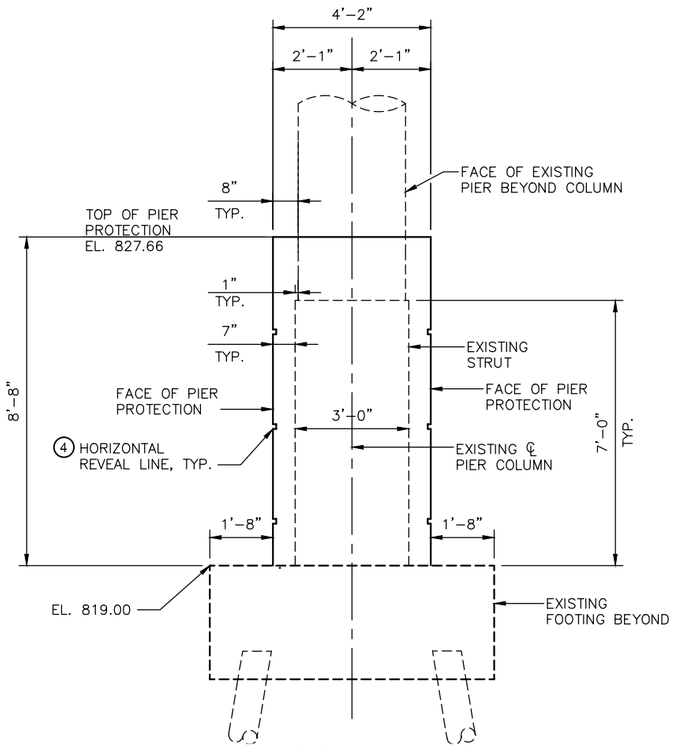

SECTION A–A

NOTES:

1. STRUCTURAL CONCRETE(3B52)
2. EXISTING PILES NOT SHOWN
3. MINIMUM HEIGHT ABOVE TOP OF RAIL
4. FOR AESTHETIC DETAILS REFER TO SHEET 5

NO.	DATE	BY	CHECK	DESIGN	REVISION / SUBMITTAL

DESIGNED BY: AMC | CHECKED BY: LKZ
DRAWN BY: CAD | CHECKED BY: LKZ

AECOM Kimley»Horn

90% SUBMISSION - 01/22/16

METROPOLITAN COUNCIL

SOUTHWEST Green Line LRT Extension

CIVIL - VOLUME 4G
I-94 (BRIDGES 27725-27729)
PIER PROTECTION
BRIDGE 27726 DETAILS

DISCIPLINE: STRUCTURES
SHEET NAME: EX4-STU-PPR-ALL94-VEH-PIR-001

SHEET 3 OF 13

Jan, 12 2016 04:21 pm V:\3400_ADC\CAD\SEGMENT E4\PLAN SHEETS\STRUCTURES\PIER PROTECTION\EX4-STU-PPR-ALL94-VEH-DTL.dwg By: Edgar.McKoy

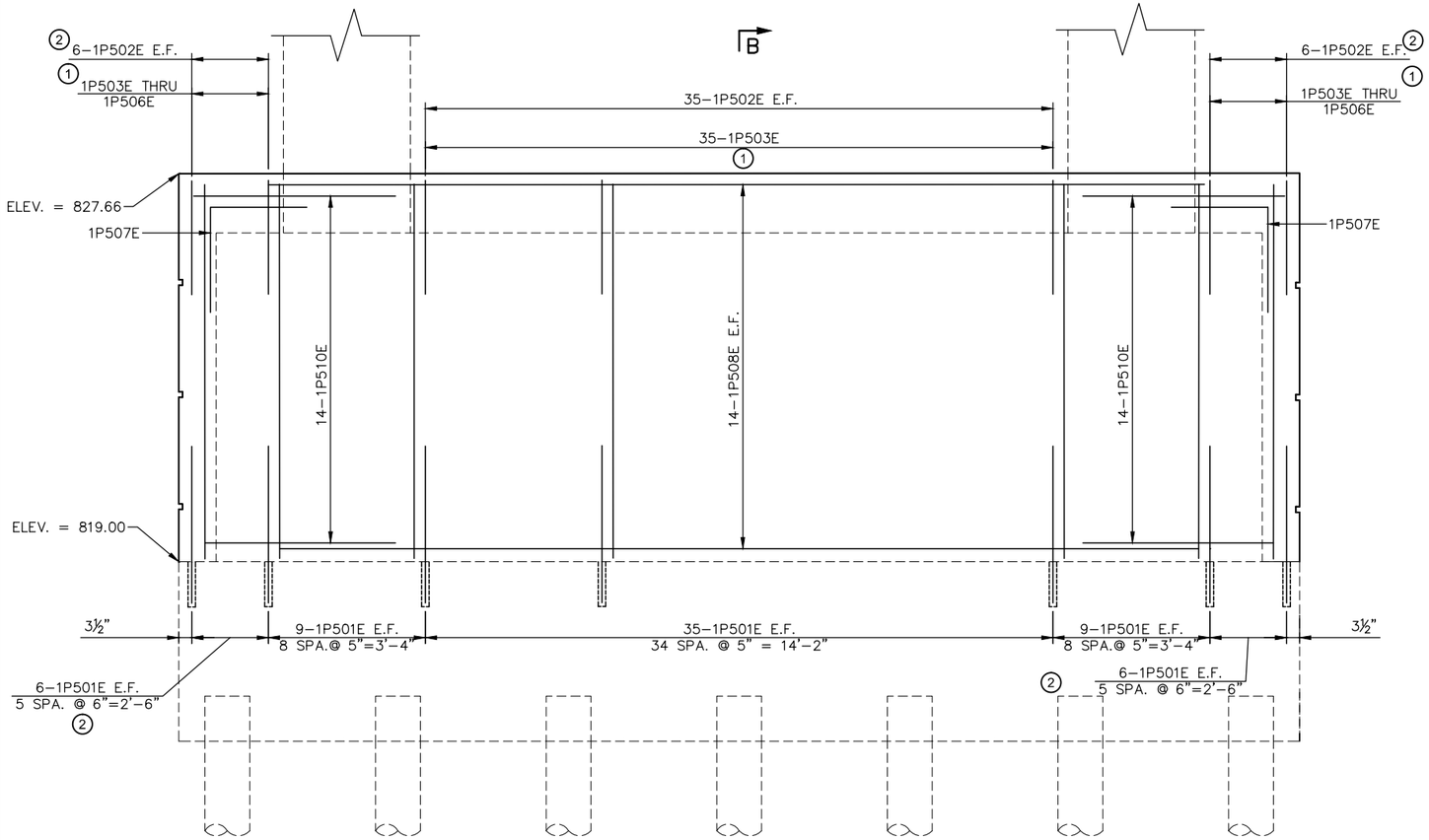

PIER 8A ELEVATION ③

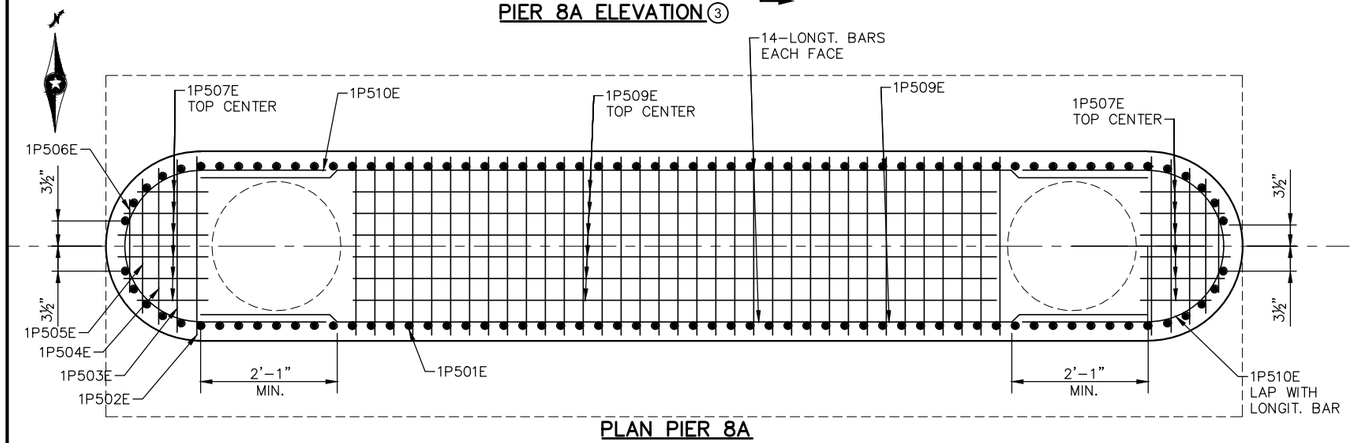

PLAN PIER 8A

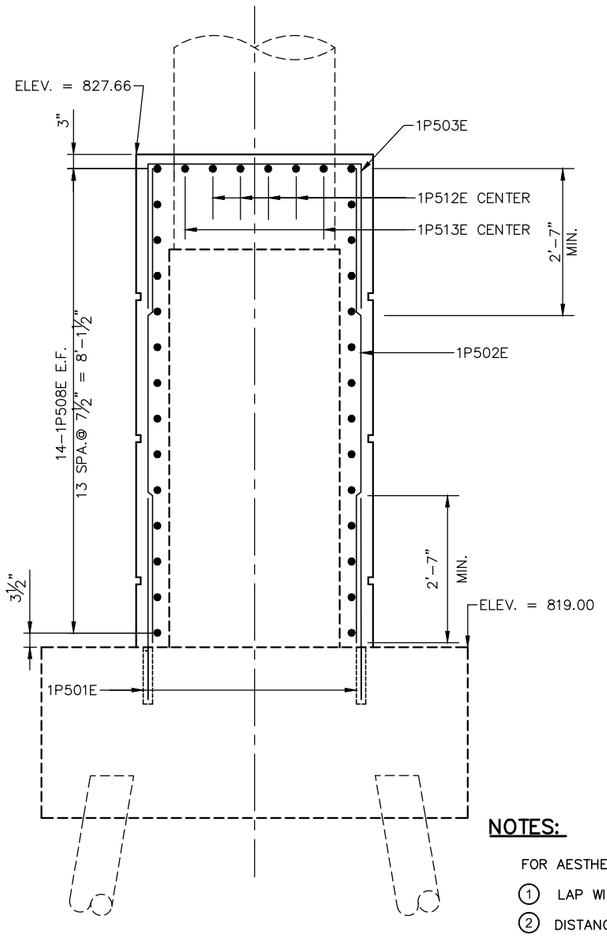

SECTION B–B

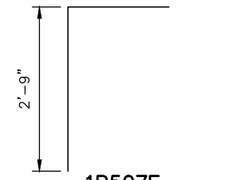

1P507E

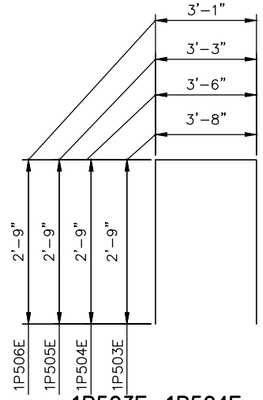

1P503E, 1P504E, 1P505E, 1P506E

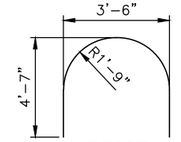

1P510E

NOTES:

FOR AESTHETIC DETAILS REFER TO SHEET 5

1. LAP WITH 1P501E
2. DISTANCE MEASURED ALONG CURVE
3. COAT PIER COLUMNS AND STRUT WITH APPROVED EPOXY BONDING AGENT

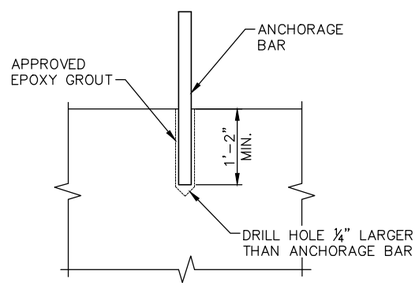

ANCHORAGE DETAIL

BILL OF REINFORCEMENT

BAR	NO.	LENGTH	SHAPE	LOCATION
1P501E	130	3'-11"	STR.	FOOTING ANCHORAGE
1P502E	130	8'-6"	STR.	BARRIER VERT. E.F.
1P503E	37	9'-2"	BENT	TIE VERTICAL
1P504E	2	9'-0"	BENT	TIE VERTICAL
1P505E	2	8'-9"	BENT	TIE VERTICAL
1P506E	2	8'-7"	BENT	TIE VERTICAL
1P507E	12	4'-7"	BENT	TIE VERTICAL
1P508E	28	20'-10"	STR.	BARRIER LONG. E.F.
1P509E	6	14'-2"	STR.	BARRIER LONG. E.F.
1P510E	28	11'-0"	BENT	TIE HORIZONTAL

NO.	DATE	BY	CHECK	DESIGN	REVISION / SUBMITTAL

DESIGNED BY: AMC | CHECKED BY: LKZ
DRAWN BY: CAD | CHECKED BY: LKZ

AECOM Kimley»Horn

90% SUBMISSION - 01/22/16

METROPOLITAN COUNCIL

SOUTHWEST Green Line LRT Extension

CIVIL - VOLUME 4G
I-94 (BRIDGES 27725-27729)
PIER PROTECTION
BRIDGE 27726 REINFORCEMENT

DISCIPLINE: STRUCTURES

SHEET NAME: EX4-STU-PPR-ALL94-VEH-PIR-002

SHEET 4 OF 13

Jan, 12 2016 04:21 pm V:\3400_ADC\CAD\SEGMENT E4\PLAN SHEETS\STRUCTURES\PIER PROTECTION\EX4-STU-PPR-ALL94-VEH-DTL.dwg By: Edgar.McKoy

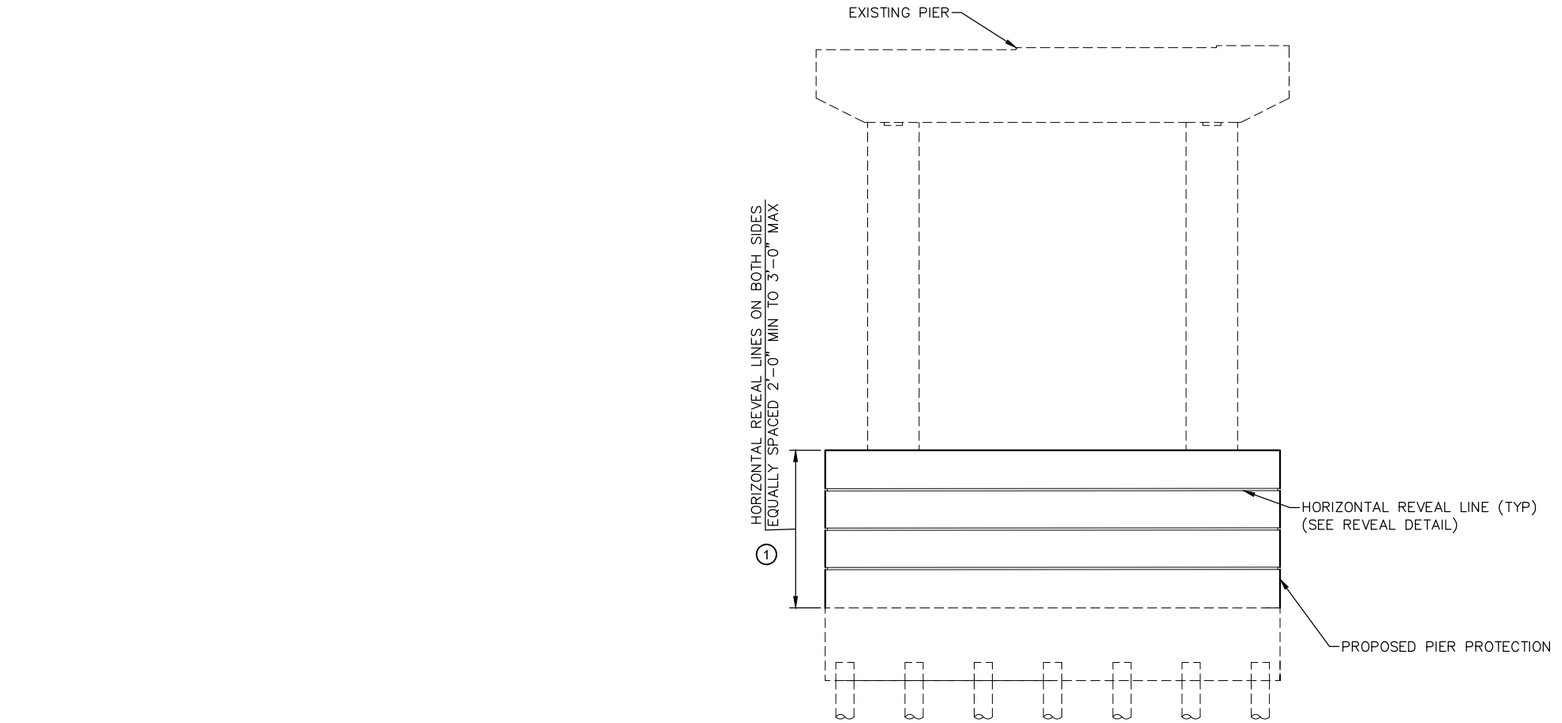

ELEVATION – PIER 8A

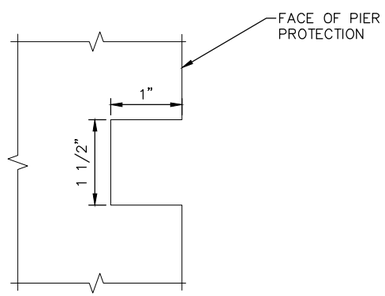

REVEAL DETAIL

NOTES:

1. PROVIDE HORIZONTAL REVEAL LINES EQUALLY SPACED AS SHOWN ON FRONT AND BACK FACE OF PIER PROTECTION.

   PROVIDE ¾" CHAMFER AT TOP OF PIER PROTECTION

NO.	DATE	BY	CHECK	DESIGN	REVISION / SUBMITTAL

DESIGNED BY: AMC | CHECKED BY: LKZ
DRAWN BY: CAD | CHECKED BY: LKZ

AECOM Kimley»Horn

90% SUBMISSION - 01/22/16

METROPOLITAN COUNCIL

SOUTHWEST Green Line LRT Extension

CIVIL - VOLUME 4G
I-94 (BRIDGES 27725-27729)
PIER PROTECTION
BRIDGE 27726 AESTHETIC DETAILS

DISCIPLINE: STRUCTURES

SHEET NAME: EX4-STU-PPR-ALL94-VEH-PIR-003

SHEET 5 OF 13

Jan, 12 2016 04:21 pm V:\3400_ADC\CAD\SEGMENT E4\PLAN SHEETS\STRUCTURES\PIER PROTECTION\EX4-STU-PPR-ALL94-VEH-DTL.dwg By: Edgar.McKoy

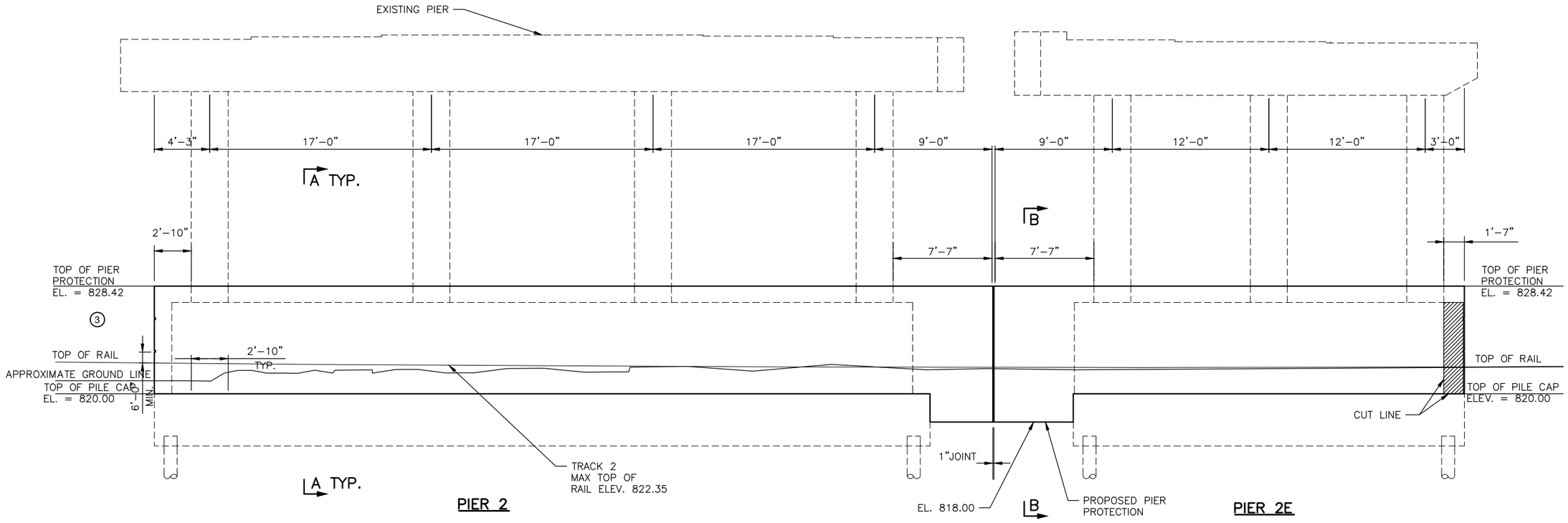

ELEVATION

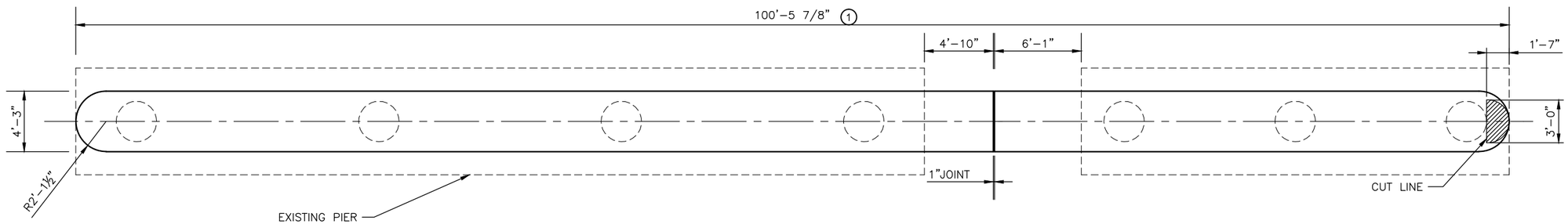

PIER 2

PLAN 2

PIER 2E

NOTES:

REFER TO NEXT SHEET FOR SECTION A–A AND B–B

FOR AESTHETIC DETAILS REFER TO SHEET 9

PORTION OF EXISTING STRUCTURE TO BE REMOVED

1. STRUCTURAL CONCRETE(3B52)
2. EXISTING PILES NOT SHOWN
3. MINIMUM HEIGHT ABOVE TOP OF RAIL

NO.	DATE	BY	CHECK	DESIGN	REVISION / SUBMITTAL

DESIGNED BY: AMC | CHECKED BY: LKZ
DRAWN BY: CAD | CHECKED BY: LKZ

AECOM Kimley»Horn

90% SUBMISSION - 01/22/16

METROPOLITAN COUNCIL

SOUTHWEST Green Line LRT Extension

CIVIL - VOLUME 4G
I-94 (BRIDGES 27725-27729)
PIER PROTECTION
BRIDGE 27727 DETAILS 1

DISCIPLINE: STRUCTURES

SHEET NAME: EX4-STU-PPR-ALL94-VEH-PIR-004

SHEET 6 OF 13

Jan, 12 2016 04:21 pm V:\3400_ADC\CAD\SEGMENT E4\PLAN SHEETS\STRUCTURES\PIER PROTECTION\EX4-STU-PPR-ALL94-VEH-DTL.dwg By: Edgar.McKoy

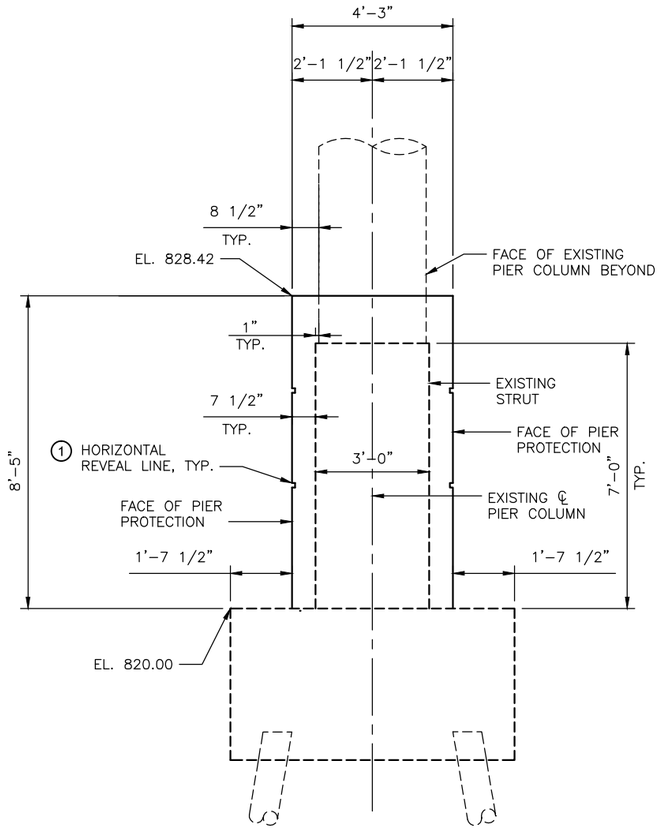

SECTION A-A TYP.

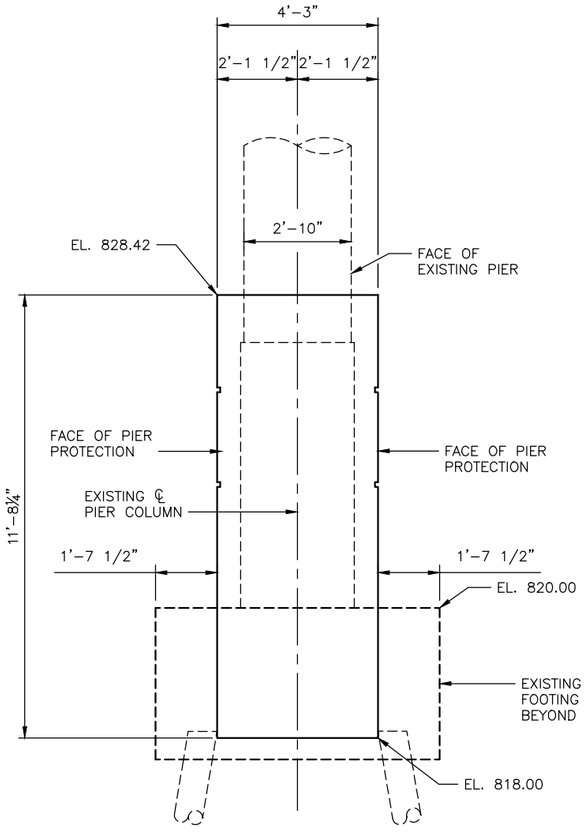

SECTION B-B TYP.

NOTES:

1. (1) FOR AESTHETIC DETAILS REFER TO SHEET 9

NO.	DATE	BY	CHECK	DESIGN	REVISION / SUBMITTAL

DESIGNED BY: AMC | CHECKED BY: LKZ
DRAWN BY: CAD | CHECKED BY: LKZ

AECOM Kimley»Horn

90% SUBMISSION - 01/22/16

METROPOLITAN COUNCIL

SOUTHWEST Green Line LRT Extension

CIVIL - VOLUME 4G
I-94 (BRIDGES 27725-27729)
PIER PROTECTION
BRIDGE 27727 DETAILS 2

DISCIPLINE: STRUCTURES

SHEET NAME: EX4-STU-PPR-ALL94-VEH-PIR-005

SHEET 7 OF 13

Jan, 12 2016 04:21 pm V:\3400_ADC\CAD\SEGMENT E4\PLAN SHEETS\STRUCTURES\PIER PROTECTION\EX4-STU-PPR-ALL94-VEH-DTL.dwg By: Edgar.McKoy

NOTES:

FOR AESTHETIC DETAIL REQUIREMENTS REFER TO SHEET 11

1. COAT PIER COLUMN AND STRUT WITH APPROVED EPOXY BONDING AGENT
2. DISTANCE MEASURED ALONG CURVE
3. LAP 2P602E WITH 2P601E
4. 1" CORK AND DOWEL JOINT REFER TO SHEET 9

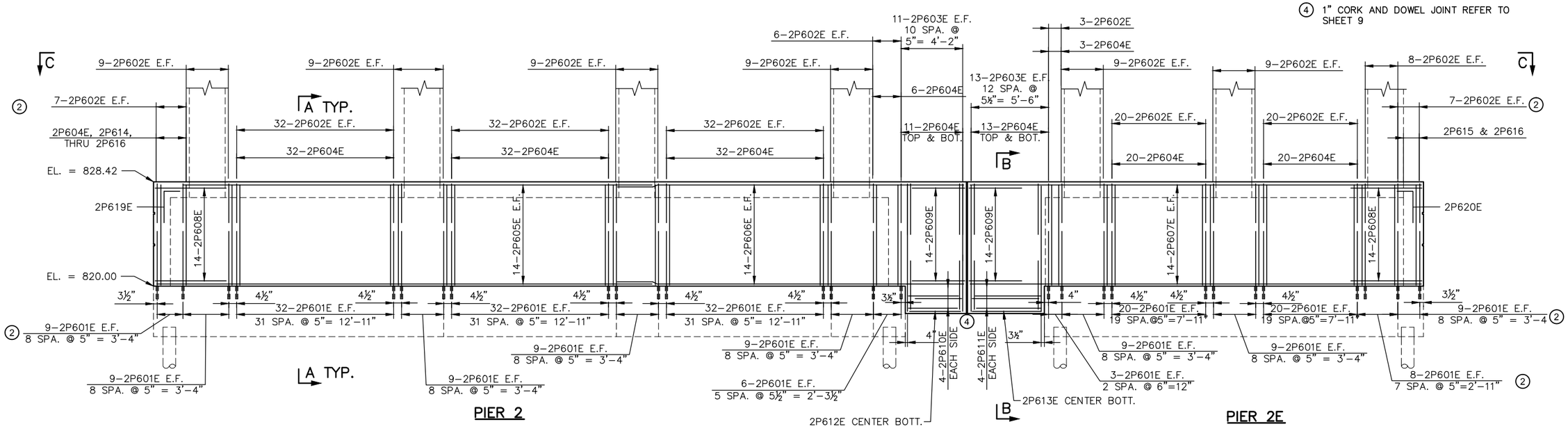

PIER 2 — PIER 2E

ELEVATION (1)(3)

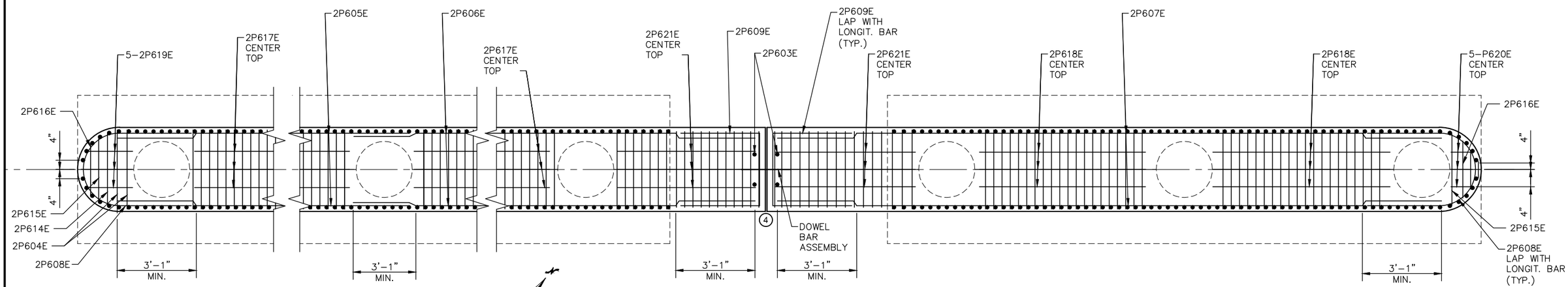

PIER 2 — PLAN — PIER 2E

NO.	DATE	BY	CHECK	DESIGN	REVISION / SUBMITTAL

DESIGNED BY: AMC | CHECKED BY: LKZ
DRAWN BY: CAD | CHECKED BY: LKZ

AECOM Kimley»Horn

90% SUBMISSION - 01/22/16

METROPOLITAN COUNCIL

SOUTHWEST Green Line LRT Extension

CIVIL - VOLUME 4G
I-94 (BRIDGES 27725-27729)
PIER PROTECTION
BRIDGE 27727 REINFORCEMENT 1

DISCIPLINE: STRUCTURES
SHEET NAME: EX4-STU-PPR-ALL94-VEH-PIR-006

SHEET 8 OF 13

Jan, 12 2016 04:21 pm V:\3400_ADC\CAD\SEGMENT E4\PLAN SHEETS\STRUCTURES\PIER PROTECTION\EX4-STU-PPR-ALL94-VEH-PIR-006.dwg By: Edgar.McKoy

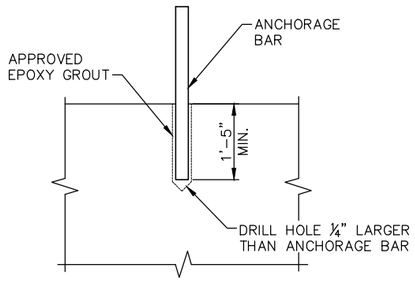

ANCHORAGE DETAIL

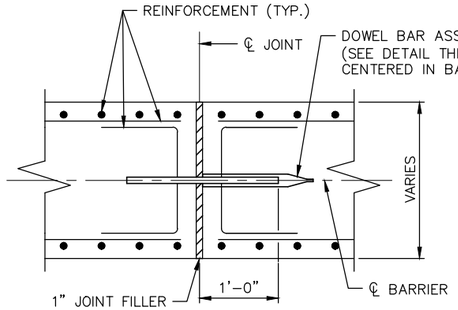

CORK AND DOWELED JOINT DETAIL
(TYPICAL SECTION THROUGH JOINT)

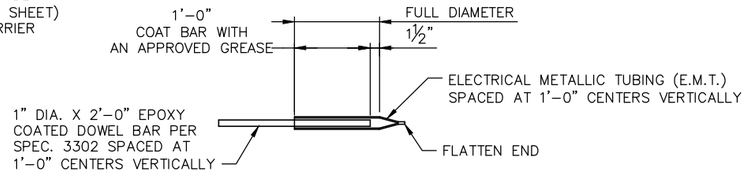

DOWEL BAR ASSEMBLY

DOWEL NOTES:

THE MATERIAL AND PLACEMENT OF THE CORK AND DOWEL JOINT CONSTRUCTION JOINT (DOWEL BAR ASSEMBLIES), IS INCLIDENTAL.

THE CONTRACTOR SHALL ASSIGN TO THE REINFORCING BAR SUPPLIER THE RESPONSIBILITY OF SUPPLYING THE NECESSARY MATERIALS ASSOCIATED WITH THE DETAILS SHOWN ON THIS SHEET.

1. JOINT FILLER SHALL BE CORK SPEC. 2401.3E3.
2. GREASE SHALL BE AN APPROVED HIGH PRESSURE TYPE THAT IS EFFECTIVE OVER THE FULL RANGE OF EXPECTED TEMPERATURES AND RESISTANT TO CHEMICAL ACTION.
3. DOWEL BAR ASSEMBLY MUST BE PLACED PERPENDICULAR TO JOINT AND PARALLEL TO THE WALL FACE, AND TO EACH OTHER.
4. 1" CORK AND DOWEL JOINT REFER TO SHEET 21 FOR DETAILS

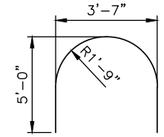

2P608E

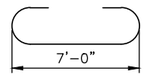

2P621E

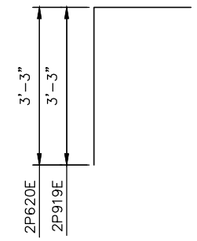

2P619E, 2P920E

2P604E, 2P609E, 2P610E, 2P611E, 2P614E, 2P615E, 2P616E

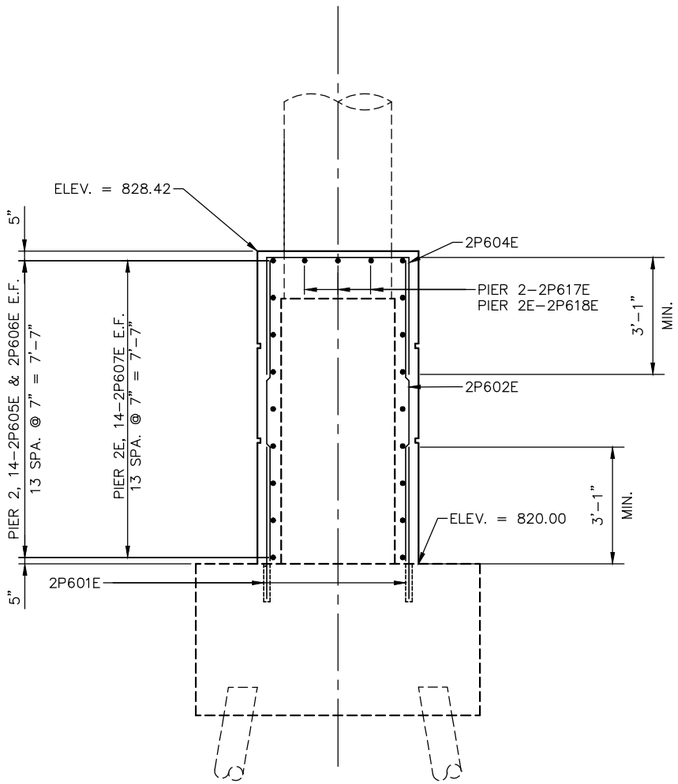

SECTION A–A TYP.

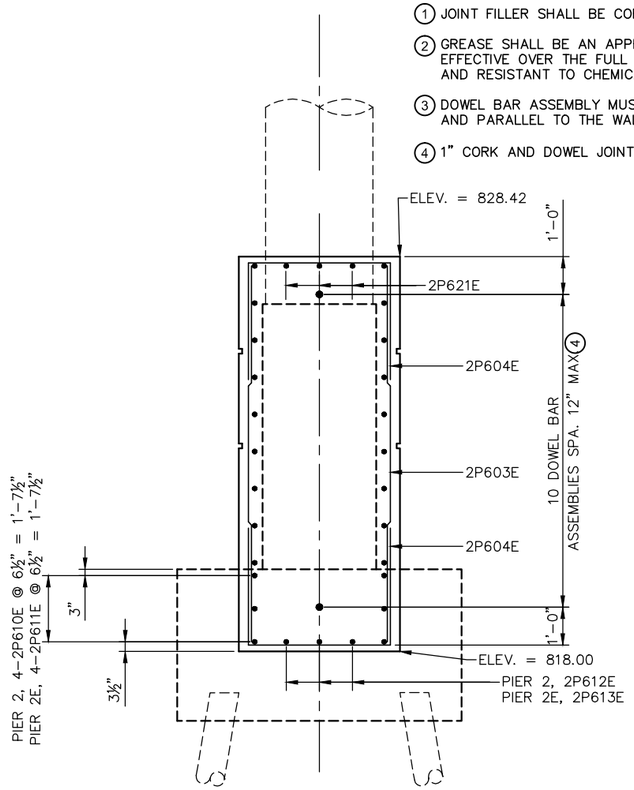

SECTION B–B

NOTES:

FOR AESTHETIC DETAIL REQUIREMENTS REFER TO SHEET 10

BILL OF REINFORCEMENT

BAR	NO.	LENGTH	SHAPE	LOCATION
2P601E	442	4'-10"	STR.	FOOTING ANCHORAGE
2P602E	443	8'-3"	STR.	BARRIER VERT. E.F.
2P603E	48	10'-1"	STR.	BARRIER VERT. E.F.
2P604E	194	10'-3"	BENT	TIE VERTICAL
2P605E	28	37'-4"	STR.	BARRIER LONG. E.F.
2P606E	28	27'-9"	STR.	BARRIER LONG. E.F.
2P607E	28	33'-11"	STR.	BARRIER LONG. E.F.
2P608E	28	12'-2"	BENT	TIE HORIZONTAL
2P609E	28	10'-1"	BENT	TIE HORIZONTAL
2P610E	8	11'-3"	BENT	TIE HORIZONTAL
2P611E	8	12'-5"	BENT	TIE HORIZONTAL
2P612E	3	4'-2"	STR.	BARRIER LONG. BOT.
2P613E	3	5'-9"	STR.	BARRIER LONG. BOT.
2P614E	1	10'-2"	BENT	TIE VERTICAL
2P615E	2	9'-10"	BENT	TIE VERTICAL
2P616E	2	9'-5"	BENT	TIE VERTICAL
2P617E	9	13'-8"	STR.	BARRIER LONG. TOP
2P618E	6	8'-8"	STR.	BARRIER LONG. TOP
2P619E	3	5'-0"	BENT	VERTICAL
2P620E	3	4'-5"	BENT	VERTICAL
2P621E	6	7'-9"	BENT	BARRIER LONG. TOP

NO.	DATE	BY	CHECK	DESIGN	REVISION / SUBMITTAL

DESIGNED BY: AMC | CHECKED BY: LKZ
DRAWN BY: CAD | CHECKED BY: LKZ

AECOM Kimley»Horn

90% SUBMISSION - 01/22/16

METROPOLITAN COUNCIL

SOUTHWEST Green Line LRT Extension

CIVIL - VOLUME 4G
I-94 (BRIDGES 27725-27729)
PIER PROTECTION
BRIDGE 27727 REINFORCEMENT 2

DISCIPLINE: STRUCTURES
SHEET NAME: EX4-STU-PPR-ALL94-VEH-PIR-007

SHEET 9 OF 13

Jan, 12 2016 04:21 pm V:\3400_ADC\CAD\SEGMENT E4\PLAN SHEETS\STRUCTURES\PIER PROTECTION\EX4-STU-PPR-ALL94-VEH-DTL.dwg By: Edgar.McKoy

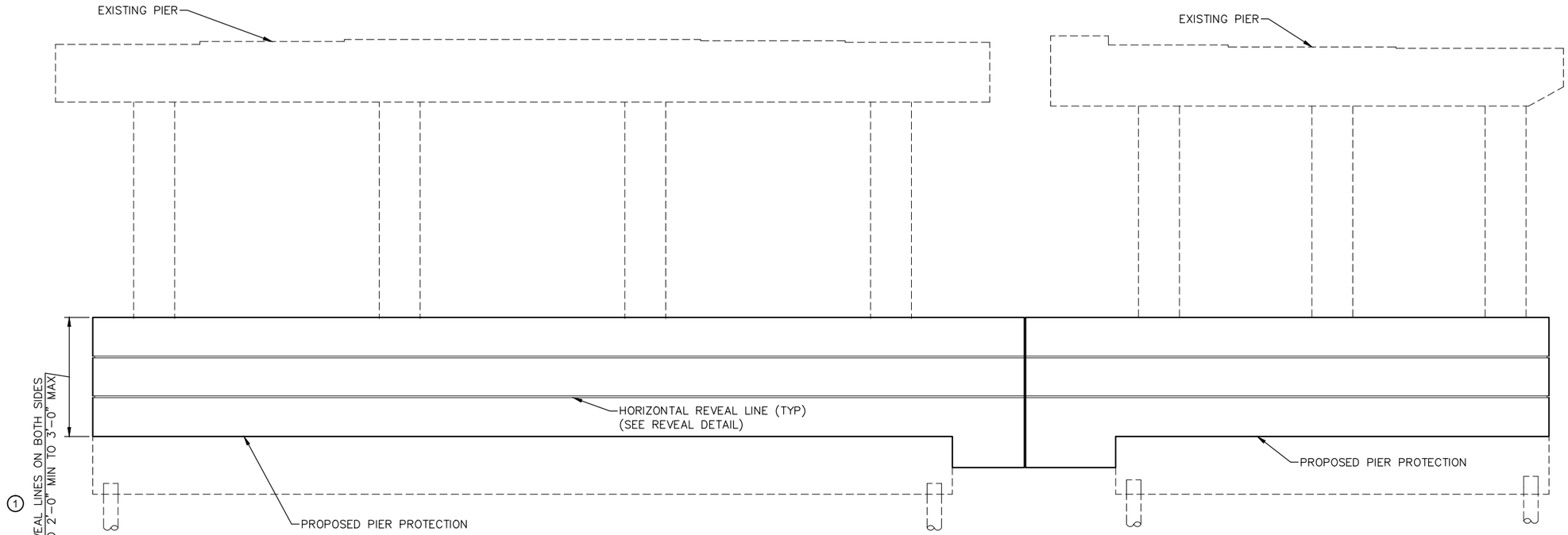

ELEVATION – PIER 2 & 2E

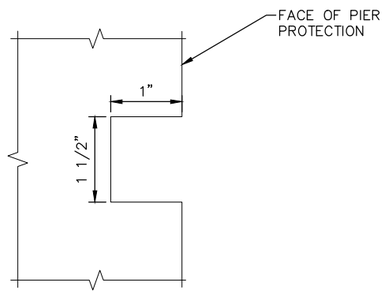

REVEAL DETAIL

NOTES:

1. PROVIDE HORIZONTAL REVEAL LINES EQUALLY SPACED AS SHOWN ON FRONT AND BACK FACE OF PIER PROTECTION.

   PROVIDE ¾" CHAMFER AT TOP OF PIER PROTECTION

NO.	DATE	BY	CHECK	DESIGN	REVISION / SUBMITTAL

DESIGNED BY: AMC | CHECKED BY: LKZ
DRAWN BY: CAD | CHECKED BY: LKZ

AECOM Kimley»Horn

90% SUBMISSION - 01/22/16

METROPOLITAN COUNCIL

SOUTHWEST Green Line LRT Extension

CIVIL - VOLUME 4G
I-94 (BRIDGES 27725-27729)
PIER PROTECTION
BRIDGE 27727 AESTHETIC DETAILS

DISCIPLINE: STRUCTURES

SHEET NAME: EX4-STU-PPR-ALL94-VEH-PIR-008

SHEET 10 OF 13

Jan, 12 2016 04:22 pm V:\3400_ADC\CAD\SEGMENT E4\PLAN SHEETS\STRUCTURES\PIER PROTECTION\EX4-STU-PPR-ALL94-VEH-DTL.dwg By: Edgar.McKoy

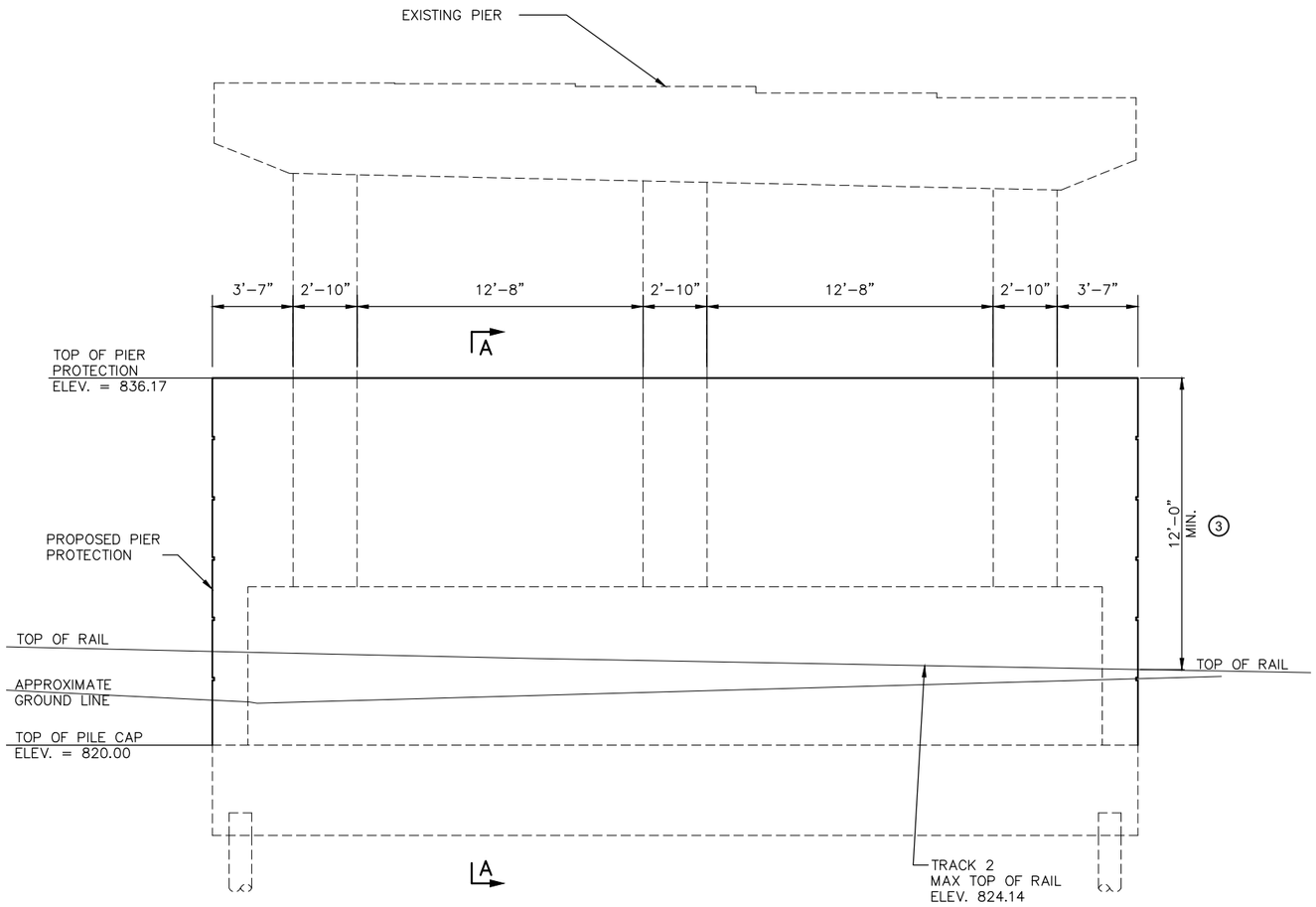

ELEVATION – PIER 3

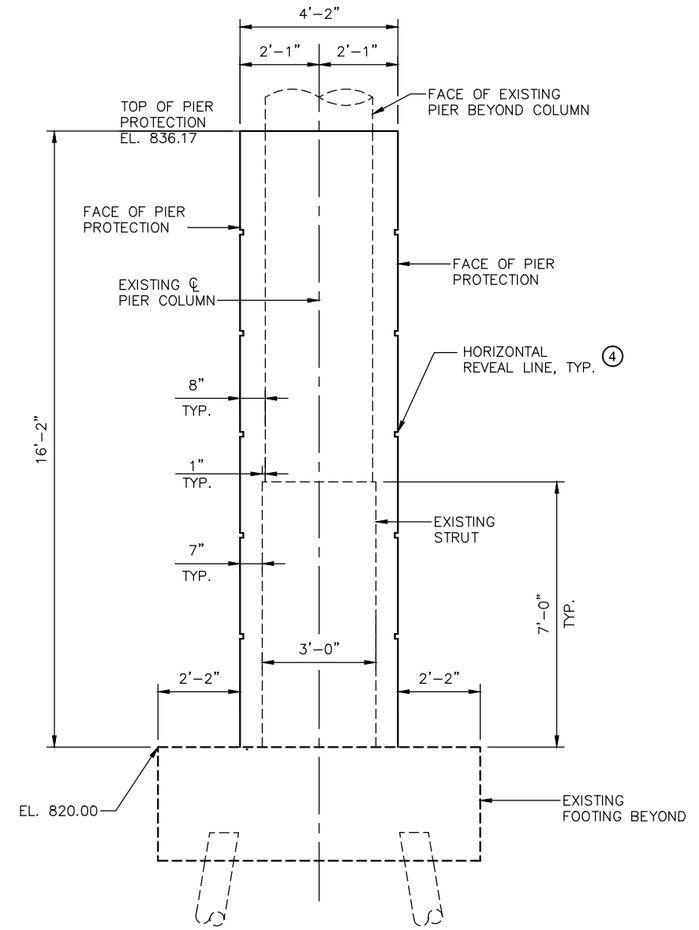

SECTION B–B

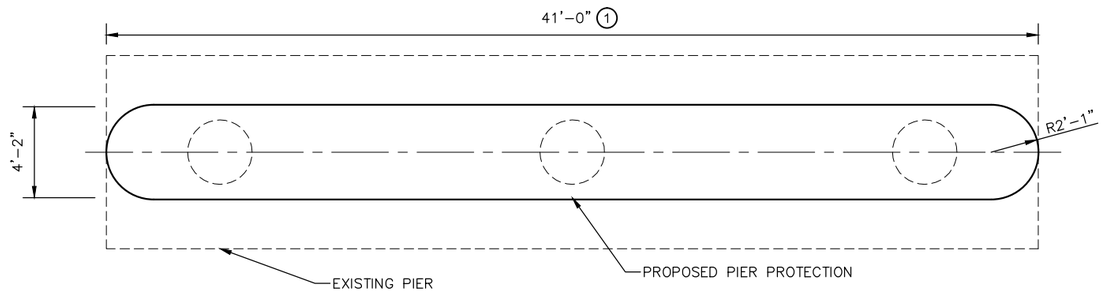

PLAN–PIER 3 ②

NOTES:

1. STRUCTURAL CONCRETE(3B52)
2. EXISTING PILES NOT SHOWN
3. MINIMUM HEIGHT ABOVE TOP OF RAIL
4. FOR AESTHETIC DETAILS REFER TO SHEET 13

NO.	DATE	BY	CHECK	DESIGN	REVISION / SUBMITTAL

DESIGNED BY: AMC | CHECKED BY: LKZ
DRAWN BY: CAD | CHECKED BY: LKZ

AECOM Kimley»Horn

90% SUBMISSION - 01/22/16

METROPOLITAN COUNCIL

SOUTHWEST Green Line LRT Extension

CIVIL - VOLUME 4G
I-94 (BRIDGES 27725-27729)
PIER PROTECTION
BRIDGE 27729 DETAILS

DISCIPLINE: STRUCTURES
SHEET NAME: EX4-STU-PPR-ALL94-VEH-PIR-009

SHEET 11 OF 13

Jan, 12 2016 04:22 pm V:\3400_ADC\CAD\SEGMENT E4\PLAN SHEETS\STRUCTURES\PIER PROTECTION\EX4-STU-PPR-ALL94-VEH-DTL.dwg By: Edgar.McKoy

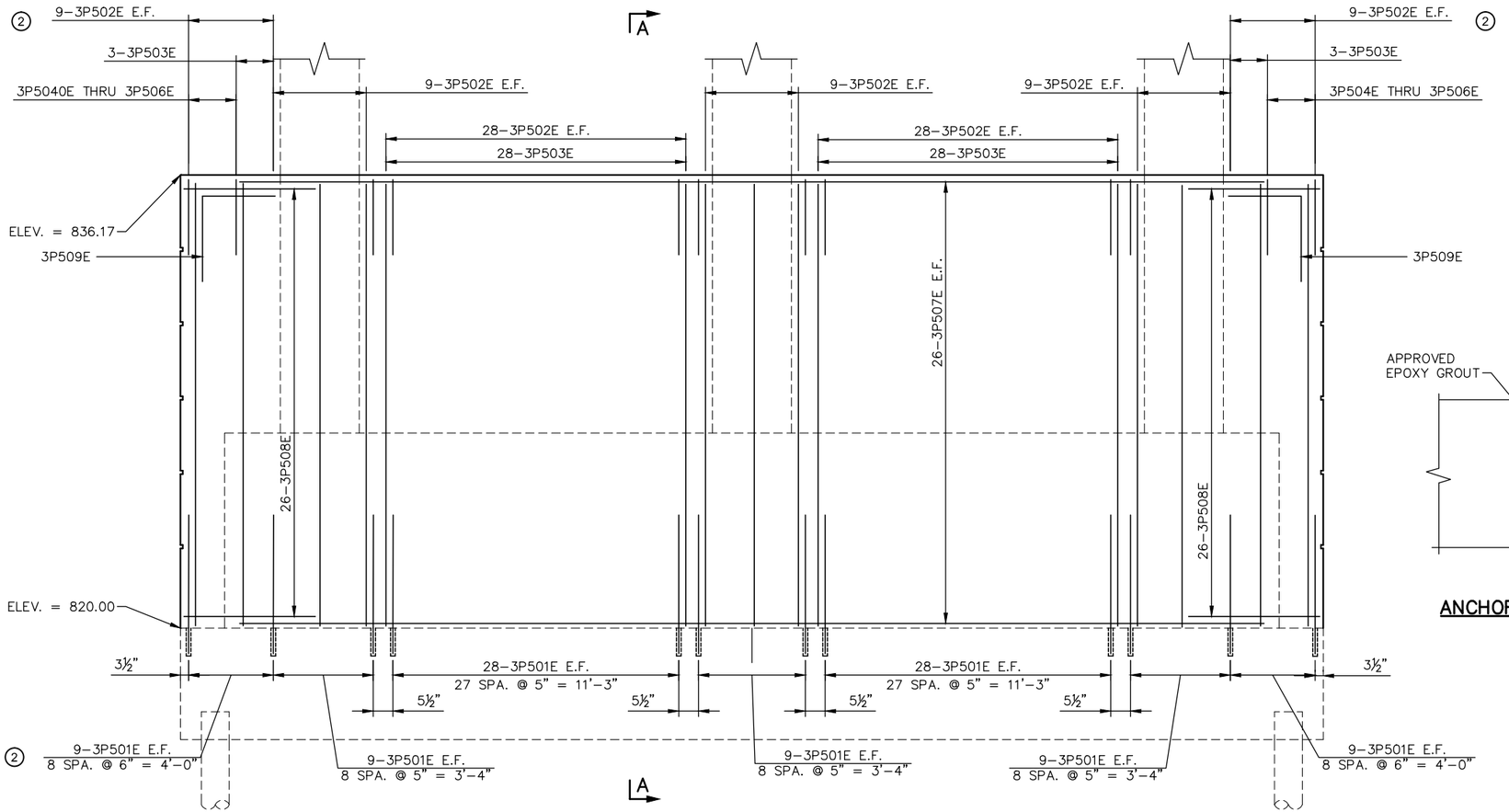

PIER 3 ELEVATION ①③

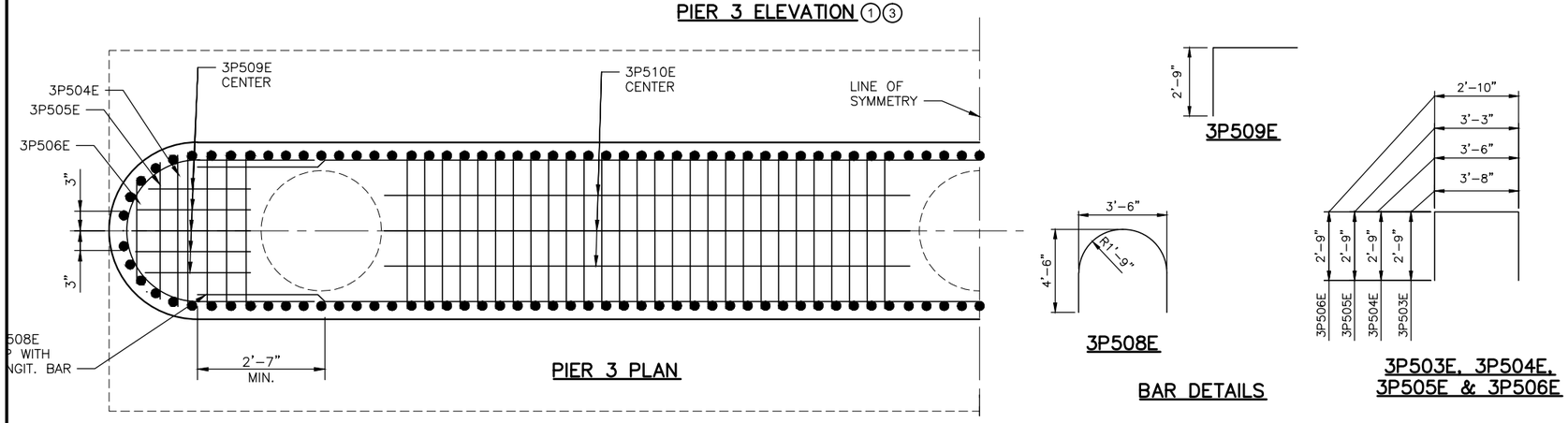

PIER 3 PLAN

BAR DETAILS

3P503E, 3P504E, 3P505E & 3P506E

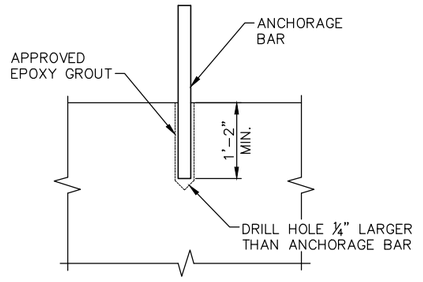

ANCHORAGE DETAIL

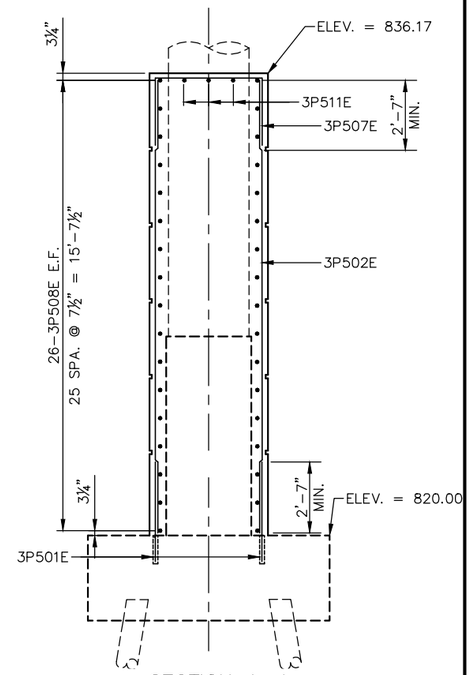

SECTION A–A

NOTES:

FOR AESTHETIC DETAILS REFER TO SHEET 13

1. COAT PIER COLUMN & STRUT WITH AN APPROVED EPOXY BONDING AGENT
2. DISTANCE MEASURED ALONE CURVE
3. LAP 3P502E WITH 3P501E

BILL OF REINFORCEMENT

BAR	NO.	LENGTH	SHAPE	LOCATION
3P501E	202	3'-10"	STR.	FOOTING ANCHORAGE
3P502E	202	16'-0"	STR.	BARRIER VERT. E.F.
3P503E	62	9'-2"	BENT	TIE VERTICAL
3P504E	2	9'-0"	BENT	TIE VERTICAL
3P505E	2	8'-9"	BENT	TIE VERTICAL
3P506E	2	8'-7"	BENT	TIE VERTICAL
3P507E	50	36'-10"	STR.	BARRIER LONG. E.F.
3P508E	52	11'-0"	BENT	TIE HORIZONTAL
3P509E	10	6'-9"	BENT	TIE VERTICAL
3P510E	3	12'-2"	STR.	BARRIER LONG. TOP

NO.	DATE	BY	CHECK	DESIGN	REVISION / SUBMITTAL

DESIGNED BY: AMC CHECKED BY: LKZ
DRAWN BY: CAD CHECKED BY: LKZ

AECOM Kimley»Horn

90% SUBMISSION - 01/22/16

METROPOLITAN COUNCIL

SOUTHWEST Green Line LRT Extension

CIVIL - VOLUME 4G
I-94 (BRIDGES 27725-27729)
PIER PROTECTION
BRIDGE 27729 REINFORCEMENT

DISCIPLINE: STRUCTURES
SHEET NAME: EX4-STU-PPR-ALL94-VEH-PIR-010

SHEET 12 OF 13

Jan, 12 2016 04:22 pm V:\3400_ADC\CAD\SEGMENT E4\PLAN SHEETS\STRUCTURES\PIER PROTECTION\EX4-STU-PPR-ALL94-VEH-DTL.dwg By: Edgar.McKoy

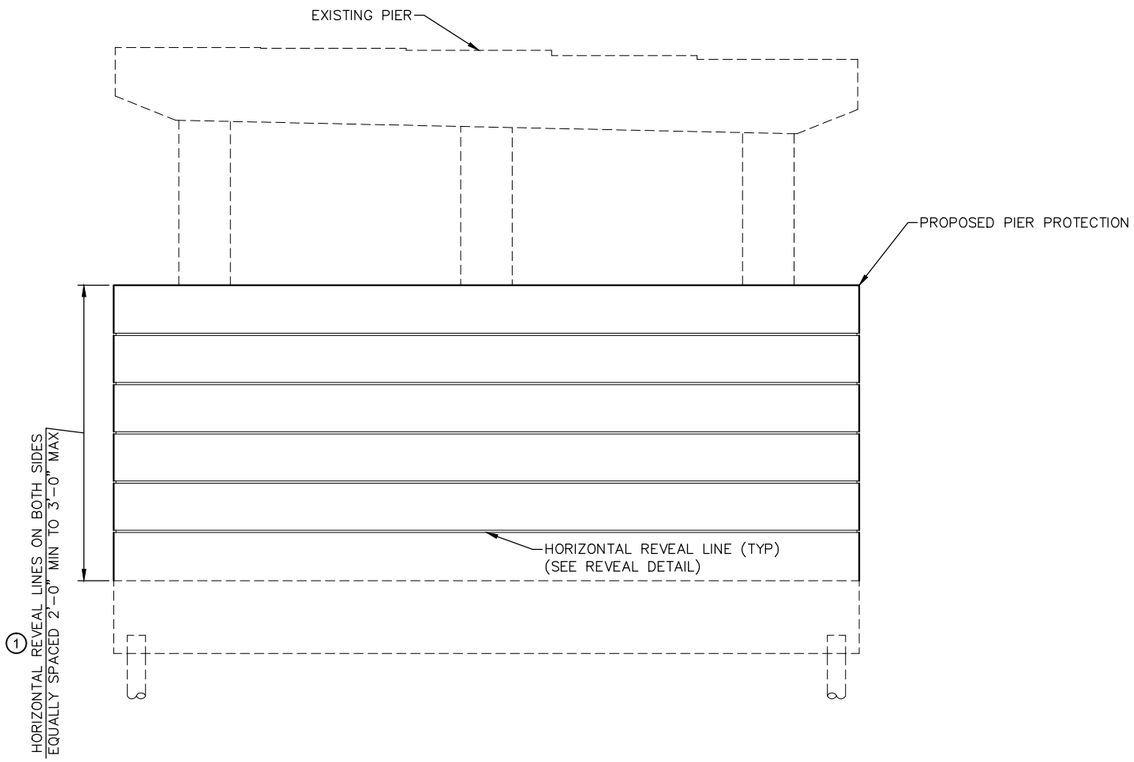

ELEVATION – PIER 3

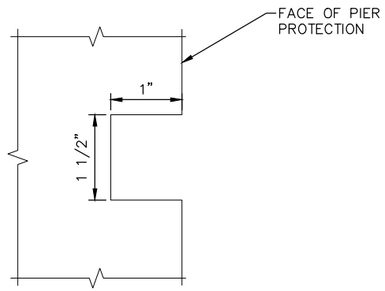

REVEAL DETAIL

NOTES:

① PROVIDE HORIZONTAL REVEAL LINES EQUALLY SPACED AS SHOWN ON FRONT AND BACK FACE OF PIER PROTECTION.

PROVIDE ¾" CHAMFER AT TOP OF PIER PROTECTION

NO.	DATE	BY	CHECK	DESIGN	REVISION / SUBMITTAL

DESIGNED BY: AMC | CHECKED BY: LKZ
DRAWN BY: CAD | CHECKED BY: LKZ

AECOM Kimley»Horn

90% SUBMISSION - 01/22/16

METROPOLITAN COUNCIL

SOUTHWEST Green Line LRT Extension

CIVIL - VOLUME 4G
I-94 (BRIDGES 27725-27729)
PIER PROTECTION
BRIDGE 27729 AESTHETIC DETAILS

DISCIPLINE: STRUCTURES
SHEET NAME: EX4-STU-PPR-ALL94-VEH-PIR-011

SHEET 13 OF 13

Jan, 12 2016 04:22 pm V:\3400_ADC\CAD\SEGMENT E4\PLAN SHEETS\STRUCTURES\PIER PROTECTION\EX4-STU-PPR-ALL94-VEH-DTL.dwg By: Edgar.McKoy

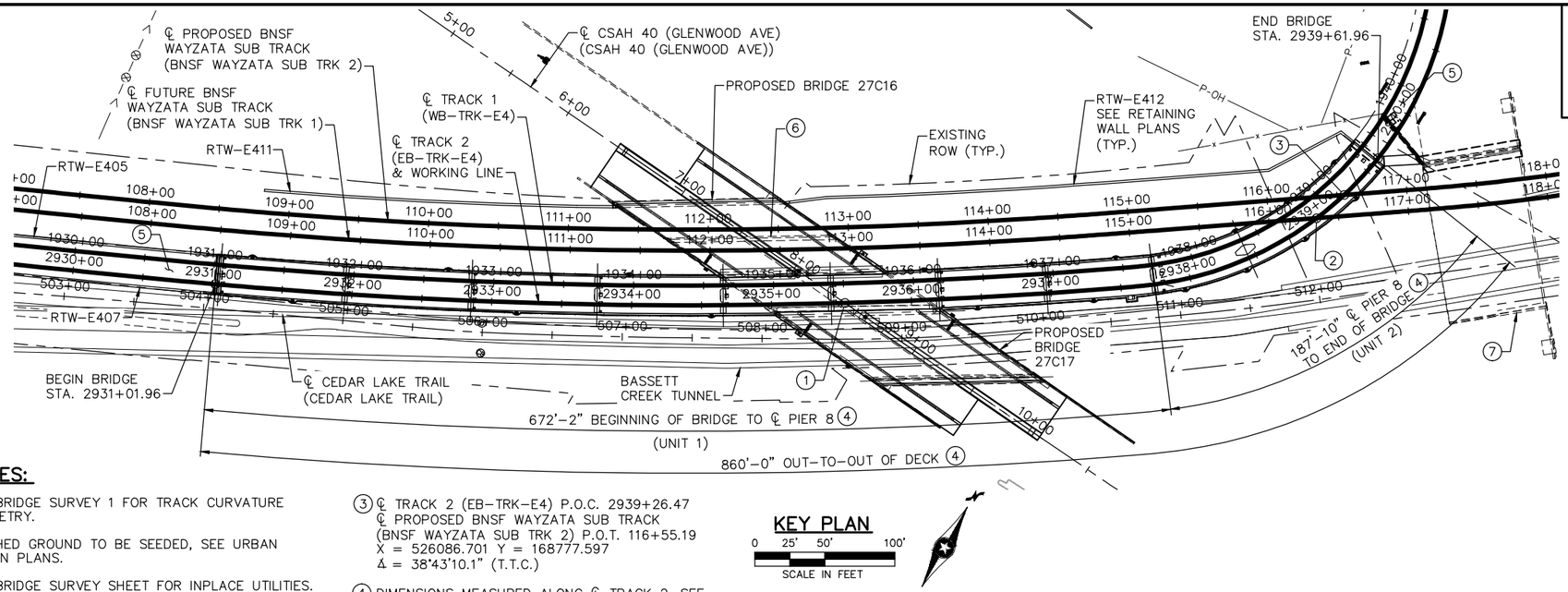

NOTES:

SEE BRIDGE SURVEY 1 FOR TRACK CURVATURE GEOMETRY.

FINISHED GROUND TO BE SEEDED, SEE URBAN DESIGN PLANS.

SEE BRIDGE SURVEY SHEET FOR INPLACE UTILITIES.

SEE SHEETS 113–118 FOR CONSTRUCTION STAGING DETAILS.

(1) CONTROL POINT
℄ TRACK 2 (EB–TRK–E4) P.O.C. 2935+52.51
℄ CSAH 40 (GLENWOOD AVE)
(CSAH 40 (GLENWOOD AVE)) P.O.T. 8+39.83
X = 525815.344 Y = 168533.506
= 36'17'28.1" (T.T.C.)

(2) ℄ TRACK 2 (EB–TRK–E4) P.O.C. 2939+00.75
℄ FUTURE BNSF WAYZATA SUB TRACK
(BNSF WAYZATA SUB TRK 1) P.O.T. 116+34.22
X = 526077.857 Y = 168753.486
Δ = 32'40'49.9" (T.T.C.)

(3) ℄ TRACK 2 (EB–TRK–E4) P.O.C. 2939+26.47
℄ PROPOSED BNSF WAYZATA SUB TRACK
(BNSF WAYZATA SUB TRK 2) P.O.T. 116+55.19
X = 526086.701 Y = 168777.597
Δ = 38'43'10.1" (T.T.C.)

(4) DIMENSIONS MEASURED ALONG ℄ TRACK 2. SEE SHEETS 2–3 FOR SPAN LENGTHS.

(5) SEE TRACK PLANS FOR TRANSITION SLAB DETAILS.

(6) EXISTING BRIDGE 27569 TO BE REMOVED, 181.9' LONG AND 70.4' WIDE, TWO STEEL CONT. BEAM SPANS BUILT IN 1988.

(7) EXISTING BRIDGE 27699 TO REMAIN, 116.7' LONG AND 70.4' WIDE, ONE PCB SPAN BUILT IN 2000.

KEY PLAN
0 25' 50' 100'
SCALE IN FEET

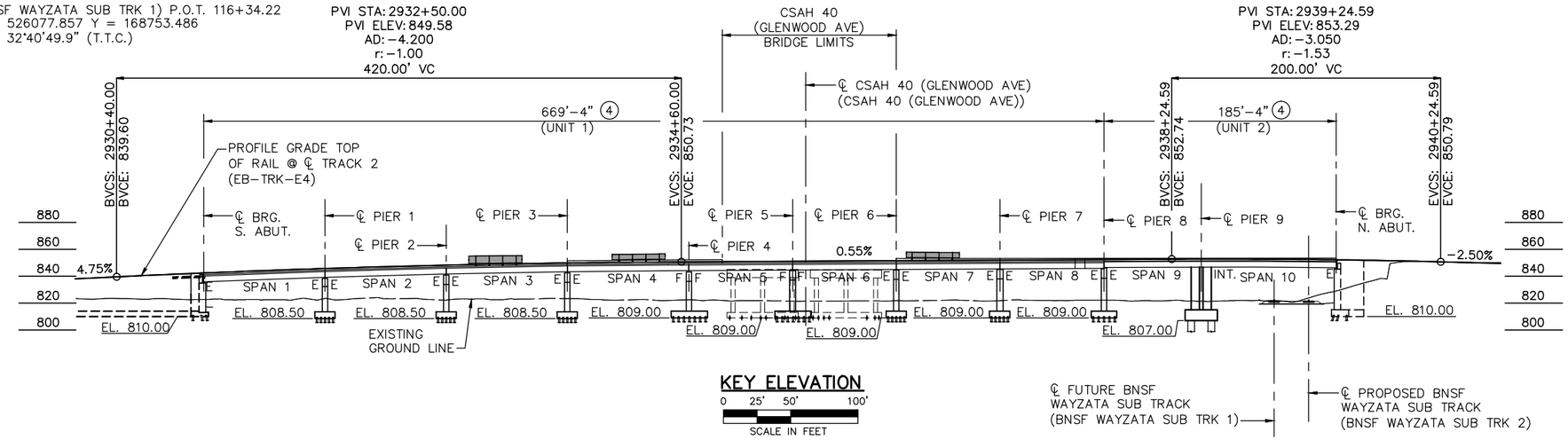

KEY ELEVATION
0 25' 50' 100'
SCALE IN FEET

℄ FUTURE BNSF WAYZATA SUB TRACK (BNSF WAYZATA SUB TRK 1)

℄ PROPOSED BNSF WAYZATA SUB TRACK (BNSF WAYZATA SUB TRK 2)

2040 PROJECTED TRAFFIC VOLUMES

	CSAH 40
A.D.T.T	690
D.H.V.	955
A.A.D.T.	7800

DESIGN DATA

AASHTO LRFD BRIDGE DESIGN SPECIFICATIONS, 7TH EDITION, 2014 WITH 2015 INTERIM REVISIONS

SOUTHWEST LIGHT RAIL TRANSIT DESIGN CRITERIA (REVISION 4.0)

2014 AREMA MANUAL FOR RAILWAY ENGINEERING

LOAD AND RESISTANCE FACTOR DESIGN METHOD

LRV & MV LOAD DIAGRAM SHOWN ON SHEET 4

MATERIAL DESIGN PROPERTIES:
REINFORCED CONCRETE:
ABUTMENTS, PIERS, & UNIT 1 DECK
f'c = 4 KSI n = 8
fy = 60 KSI REINFORCEMENT
UNIT 2 GIRDERS & DECK, & PIER 9 INTEGRAL CAP
f'c = 6 KSI n = 6
fy = 60 KSI REINFORCEMENT

PRESTRESSED CONCRETE:
f'c = 8 KSI n = 1
fpu = 270 KSI
FOR 0.6" DIA. LOW RELAXATION STRANDS

DESIGN SPEED: UNDER = PER BNSF RAIL
OVER = 50–10 MPH

DECK AREA = 24309 SQ. FT.

LIST OF SHEETS

NO.	DESCRIPTION
1	KEY PLAN & ELEVATION
2–3	GENERAL PLAN & ELEVATION
4	SCHEDULE OF QUANTITIES
5	STRAY CURRENT NOTES
6–7	TRANSVERSE SECTION
8–10	BRIDGE LAYOUT
11–18	SOUTH ABUTMENT DETAILS
19–28	NORTH ABUTMENT DETAILS
29–49	PIER DETAILS
50–52	FRAMING PLAN
53–56	MN54" PRESTRESSED CONCRETE BEAM
57–66	CONCRETE GIRDER DETAILS
67–82	SUPERSTRUCTURE DETAILS
83–85	RAILING DETAILS
86	CONCRETE CURB (MOD.)
87	CONCRETE BARRIER (TYPE P–4,TL–4) (MOD.)
88	CONCRETE SNOW BARRIER
89	WIRE FENCE DESIGN SPECIAL
90–93	CONDUIT SYSTEM
94–96	DRAINAGE SYSTEM DETAILS
97–99	WATERPROOF EXPANSION DEVICE
100–104	DETAILS
105	AS BUILT BRIDGE DATA
106–107	BRIDGE SURVEY
108	BRIDGE SURVEY PLAN
109–112	BRIDGE SURVEY PROFILE
113–118	STAGING PLAN

BRIDGE NO. R0697

SOUTHWEST LRT OVER BNSF WAYZATA SUB RR TRACKS.
0.1 MI. S.E. OF JCT. CSAH 40 (GLENWOOD AVENUE) AND INTERSTATE 94 IN MINNEAPOLIS.

BRIDGE I.D. NO. 501 & 206

KEY PLAN & ELEVATION

SEC 22 T 29 N R 24 W
CITY OF MINNEAPOLIS HENNEPIN COUNTY

JOB NO.: T9N635 | STATE PROJ. NO.: 9909–01 | MNDOT REVIEW: JOE NIETFELD

NO.	DATE	BY	CHECK	DESIGN	REVISION / SUBMITTAL

DESIGNED BY: KAE CHECKED BY: EJT
DRAWN BY: LMT CHECKED BY: EJT

AECOM Kimley»Horn

90% SUBMISSION - 01/22/16

METROPOLITAN COUNCIL

SOUTHWEST Green Line LRT Extension

CIVIL - VOLUME 4G
LRT OVER BNSF
BRIDGE R0697
KEY PLAN & ELEVATION

DISCIPLINE: STRUCTURES
SHEET NAME: CBRR0697-BRG-GPE-001

SHEET 1 OF 118

Jan, 18 2016 01:33 pm V:\3400_ADC\CAD\SEGMENT E4\PLAN SHEETS\STRUCTURES\R0697\CBRR0697-BRG-GPE-001.dwg By: lisa.thompson

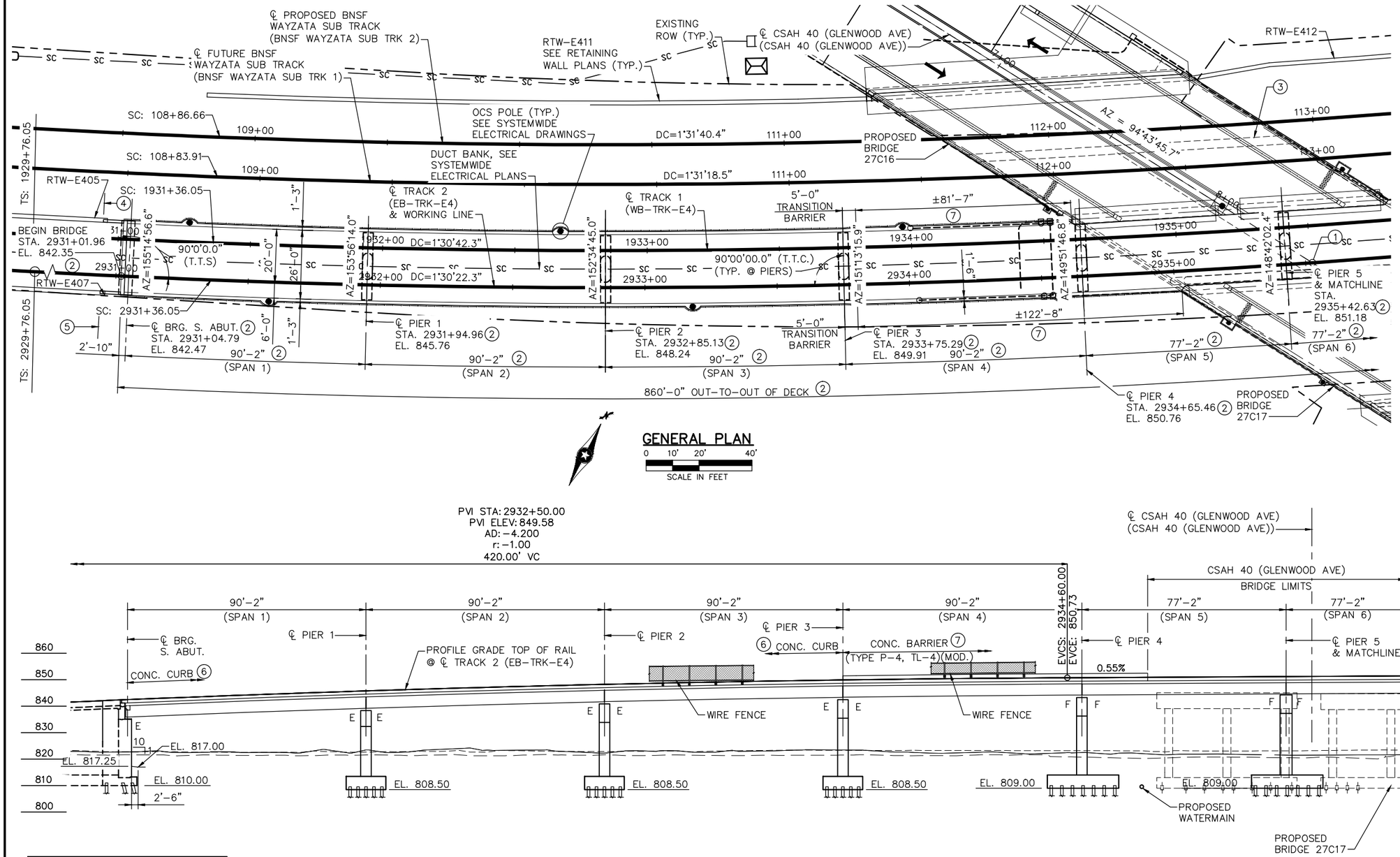

GENERAL PLAN

0 10' 20' 40'
SCALE IN FEET

GENERAL ELEVATION

0 10' 20' 40'
SCALE IN FEET

EXISTING GROUND PROFILE
21'–3" WEST
℄ TRACK 2
7'–3" RIGHT

NOTES:

WORKING POINTS NOT SHOWN FOR CLARITY. SEE SHEETS 8 AND 9 FOR WORKING POINT DETAILS.

DECK DRAINS AND RAIL ACCESS BOXES NOT SHOWN FOR CLARITY. SEE SHEETS 67–69 FOR LOCATIONS.

1. CONTROL POINT
   ℄ TRACK 2 (EB–TRK–E4) P.O.C. 2935+52.51
   ℄ CSAH 40 (GLENWOOD AVE)
   (CSAH 40 (GLENWOOD AVE)) P.O.T. 8+39.83
   X = 525815.344 Y = 168533.506
   Δ = 36°17'28.1" (T.T.C.)
2. DIMENSIONS AND ELEVATIONS MEASURED ALONG ℄ TRACK 2.
3. EXISTING BRIDGE 27569 TO BE REMOVED, 181.9' LONG AND 70.4' WIDE, TWO STEEL CONT. BEAM SPANS BUILT IN 1988.
4. END OF RETAINING WALL E405 AND BEGIN OF SW WINGWALL. ℄ TRACK 2 (EB–TRK–E4) STA. 2930+94.30.
5. END OF RETAINING WALL E407 AND BEGIN OF SE WINGWALL. ℄ TRACK 2 (EB–TRK–E4) STA. 2930+94.30.
6. CONCRETE CURB, SEE SHEET 86 FOR DETAILS
7. CONCRETE BARRIER (TYPE P–4, TL–4) (MOD.), SEE SHEET 87 FOR DETAILS

NO.	DATE	BY	CHECK	DESIGN	REVISION / SUBMITTAL

DESIGNED BY: KAE | CHECKED BY: EJT
DRAWN BY: LMT | CHECKED BY: EJT

AECOM Kimley»Horn

90% SUBMISSION - 01/22/16

METROPOLITAN COUNCIL

SOUTHWEST Green Line LRT Extension

CIVIL - VOLUME 4G
LRT OVER BNSF
BRIDGE R0697
GENERAL PLAN & ELEVATION 1

DISCIPLINE: STRUCTURES
SHEET NAME: CBRR0697-BRG-GPE-002-1

SHEET 2 OF 118

Jan, 18 2016 01:35 pm v:\3400_ADC\CAD\SEGMENT E4\PLAN SHEETS\STRUCTURES\R0697\CBRR0697-BRG-GPE-002.dwg By: lisa.thompson

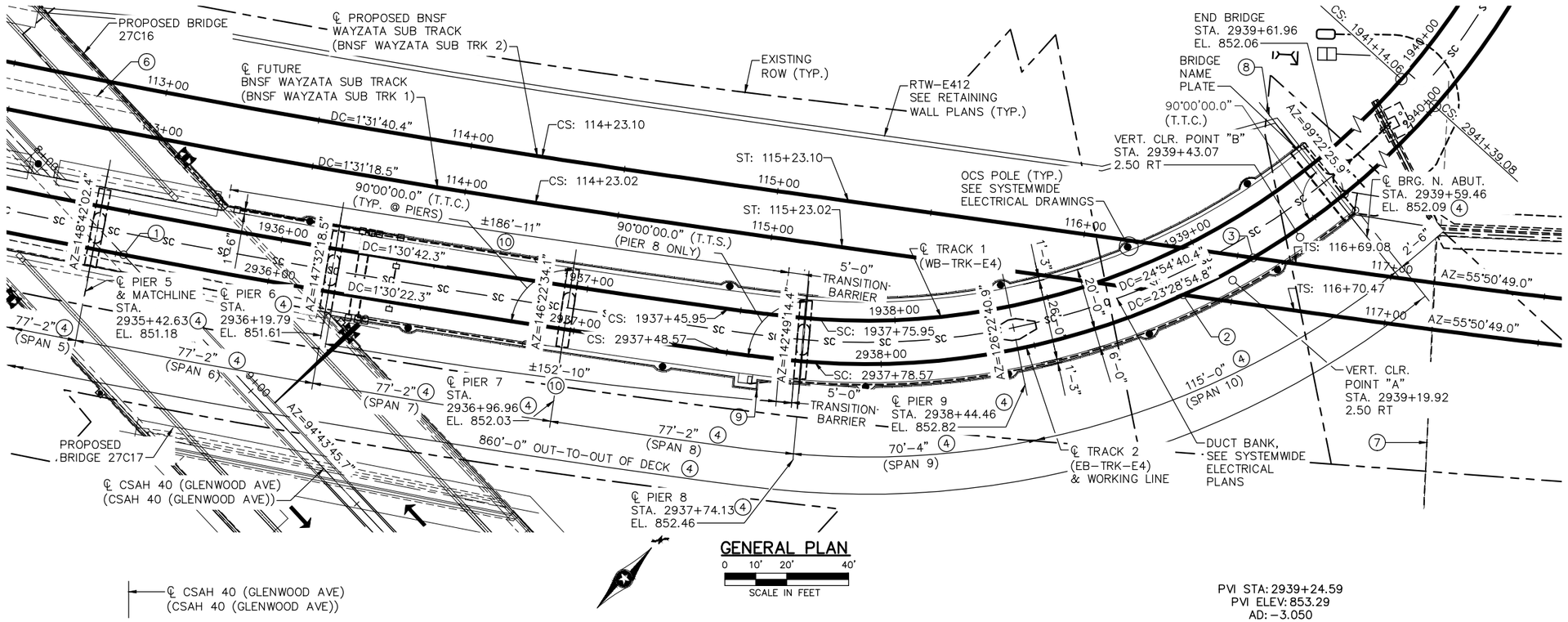

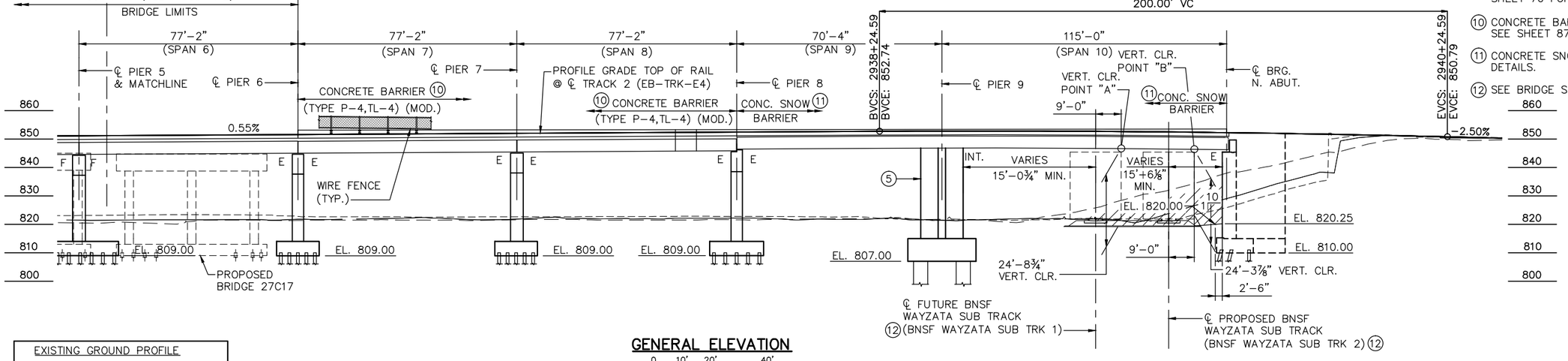

NOTES:

WORKING POINTS NOT SHOWN FOR CLARITY. SEE SHEETS 9 AND 10 FOR WORKING POINT DETAILS.

DECK DRAINS AND RAIL ACCESS BOXES NOT SHOWN FOR CLARITY. SEE SHEETS 67–69 FOR LOCATIONS.

HATCHED AREA TO BE REMOVED.

(1) CONTROL POINT
℄ TRACK 2 (EB–TRK–E4) P.O.C. 2935+52.51
℄ CSAH 40 (GLENWOOD AVE)
(CSAH 40 (GLENWOOD AVE)) P.O.T. 8+39.83
X = 525815.344 Y = 168533.506
Δ = 36°17'28.1" (T.T.C.)

(2) ℄ TRACK 2 (EB–TRK–E4) P.O.C. 2939+00.75
℄ FUTURE BNSF WAYZATA SUB TRACK
(BNSF WAYZATA SUB TRK 1) P.O.T. 116+34.22
X = 526077.857 Y = 168753.486
Δ = 32°40'49.9" (T.T.C.)

(3) ℄ TRACK 2 (EB–TRK–E4) P.O.C. 2939+26.47
℄ PROPOSED BNSF WAYZATA SUB TRACK
(BNSF WAYZATA SUB TRK 2) P.O.T. 116+55.19
X = 526086.701 Y = 168777.597
Δ = 38°43'10.1" (T.T.C.)

(4) DIMENSIONS AND ELEVATIONS MEASURED ALONG ℄ TRACK 2.

(5) PIER IS CONSIDERED TO BE OF HEAVY CONSTRUCTION IN ACCORDANCE WITH MnDOT LRFD BRIDGE DESIGN MANUAL AND AREMA MANUAL FOR RAILWAY ENGINEERING.

(6) EXISTING BRIDGE 27569 TO BE REMOVED, 181.9' LONG AND 70.4' WIDE, TWO STEEL CONT. BEAM SPANS BUILT IN 1988.

(7) EXISTING BRIDGE 27699 TO REMAIN, 116.7' LONG AND 70.4' WIDE, ONE PCB SPAN BUILT IN 2000.

(8) END OF RETAINING WALL E412 AND BEGIN NORTH ABUTMENT. ℄ TRACK 2 (EB–TRK–E4) STA. 2939+59.46, OFFSET 21 FEET LEFT.

(9) FRICTION MODIFIER EQUIPMENT BLISTER, SEE SHEET 70 FOR DETAILS.

(10) CONCRETE BARRIER (TYPE P–4, TI–4) (MOD.), SEE SHEET 87 FOR DETAILS.

(11) CONCRETE SNOW BARRIER, SEE SHEET 88 FOR DETAILS.

(12) SEE BRIDGE SURVEY FOR TYPICAL SECTION.

NO.	DATE	BY	CHECK	DESIGN	REVISION / SUBMITTAL

DESIGNED BY: KAE CHECKED BY: EJT
DRAWN BY: LMT CHECKED BY: EJT

AECOM Kimley»Horn

90% SUBMISSION - 01/22/16

METROPOLITAN COUNCIL

SOUTHWEST Green Line LRT Extension

CIVIL - VOLUME 4G
LRT OVER BNSF
BRIDGE R0697
GENERAL PLAN & ELEVATION 2

DISCIPLINE: STRUCTURES
SHEET NAME: CBRR0697-BRG-GPE-003-2

SHEET 3 OF 118

Jan. 18 2016 01:35 pm V:\3400_ADC\CAD\SEGMENT E4\PLAN SHEETS\STRUCTURES\R0697\CBRR0697-BRG-GPE-002.dwg By: lisa.thompson

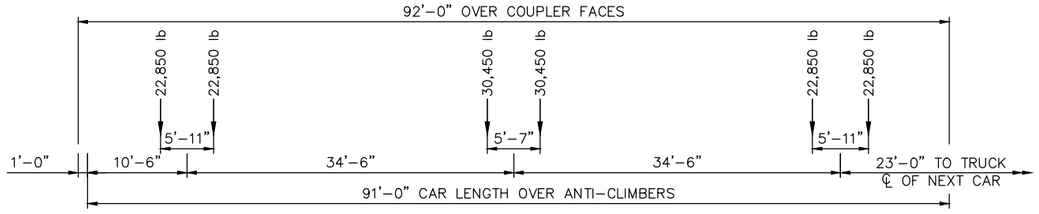

LIGHT RAIL VEHICLE LOADING DIAGRAM

NOTES:

THE LRT TRAIN SHALL CONSIST OF EITHER ONE, TWO, OR THREE CARS, WHICHEVER PRODUCES THE MAXIMUM LOAD FOR THE ELEMENT UNDER CONSIDERATION.

AXLE LOAD IN POUNDS.

LOADING DIAGRAM REPRESENTS MAXIMUM LOAD AT EACH TRUCK.

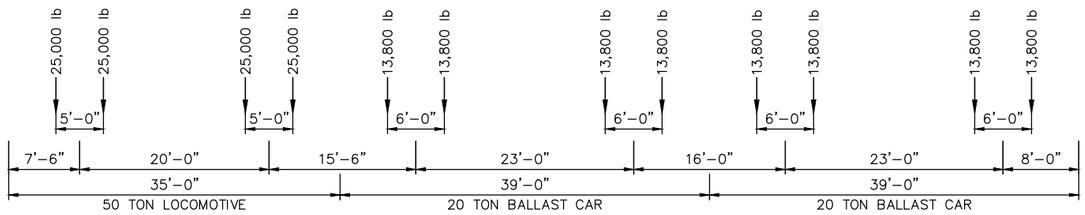

MAINTENANCE TRAIN LOADING DIAGRAM

NOTES:

THE MAINTENANCE TRAIN SHALL CONSIST OF ONE LOCOMOTIVE AND ONE, TWO, THREE, OR FOUR BALLAST CARS, WHICHEVER PRODUCES THE MAXIMUM LOAD FOR THE ELEMENT UNDER CONSIDERATION.

AXLE LOAD IN POUNDS.

WEIGHT OF EMPTY BALLAST CAR IS 15,000 POUNDS.

KEYNOTES:

1. A BENCHMARK IS REQUIRED, LOCATED AT THE NORTHEAST CORNER OF THE BRIDGE. STATE WILL FURNISH DISK. BEND PRONGS OUTWARD TO ANCHOR DISK TO CONCRETE. BOTTOM OF DISK TOP TO BE PLACED FLUSH WITH CONCRETE.
2. QUANTITIES LISTED FOR THE COMPONENT ITEMS OF THE LUMP SUM BR R0697 ITEM ARE FOR INFORMATIONAL PURPOSES. ANY ADDITIONAL ITEMS OR CHANGES IN QUANTITIES REQUIRED SHALL BE PROVIDED BY THE CONTRACTOR WITH NO ADDITIONAL COMPENSATION.
3. MEASUREMENT AND PAYMENT FOR COMPONENT ITEMS SHALL BE PART OF THE LUMP SUM PAYMENT FOR BR R0697. REFER TO MNDOT STANDARD SPECIFICATION OR SPECIAL PROVISION FOR TECHNICAL SPECIFICATION REQUIREMENTS FOR ALL PROVISION OTHER THAN MEASUREMENT AND PAYMENT SERVICES.
4. INCLUDES QUANTITIES FOR 96" AND 120" TALL WIRE FENCE FABRIC.
5. CONCRETE QUANTITY INCLUDES PORTIONS OF STRUCTURE THAT MUST ADHERE TO MASS CONCRETE PROVISIONS. SEE SPECIAL PROVISIONS.
6. FORM LINER, SEE SPECIAL PROVISIONS.

CONSTRUCTION NOTES:

THE 2016 EDITION OF THE MINNESOTA DEPARTMENT OF TRANSPORTATION "STANDARD SPECIFICATIONS FOR CONSTRUCTION" SHALL GOVERN.

BRIDGE SEAT REINFORCEMENT SHALL BE CAREFULLY PLACED TO AVOID INTERFERENCE WITH DRILLING HOLES FOR ANCHOR RODS, THE BEAMS SHALL BE ERECTED IN FINAL POSITION PRIOR TO DRILLING HOLES FOR AND PLACING ANCHOR RODS.

THE BAR SIZES SHOWN IN THIS PLAN ARE IN U.S. CUSTOMARY DESIGNATIONS. THE FIRST DIGIT OR THE FIRST TWO DIGITS OF EACH BAR MARK INDICATE THE BAR SIZE.

BARS MARKED WITH THE SUFFIX "E" SHALL BE EPOXY COATED IN ACCORDANCE WITH SPEC. 3301.

ALL REINFORCEMENT SHALL BE 2 INCHES CLEAR, UNLESS SHOWN OR NOTED OTHERWISE.

THE PILE LOADS SHOWN IN THE PLANS AND THE CORRESPONDING NOMINAL PILE BEARING RESISTANCE (Rn) WERE COMPUTED USING LRFD METHODOLOGY. PILE BEARING RESISTANCE DETERMINED IN THE FIELD SHALL INCORPORATE THE METHODS AND/OR FORMULAS DESCRIBED IN THE SPECIAL PROVISIONS.

THE SUBSURFACE UTILITY INFORMATION IN THIS PLAN IS UTILITY QUALITY LEVEL D. THIS UTILITY QUALITY LEVEL WAS DETERMINED ACCORDING TO THE GUIDELINES OF CI/ASCE 38-02, ENTITLED "STANDARD GUIDELINES FOR THE COLLECTION AND DEPICTION OF EXISTING SUBSURFACE UTILITY DATA".

SCHEDULE OF QUANTITIES

SPEC. SECTION	COMPONENT ITEM	UNIT	QUANTITY
-	CONSTRUCT BRIDGE R0697	LUMP SUM	L.S.

COMPONENT ITEM SUMMARY (BRIDGE R0697)

	SPEC. SECTION	COMPONENT ITEM	UNIT (2)	QUANTITY (2)
(5)	2401	STRUCTURAL CONCRETE (1G52)	CU. YD.	
(5)	2401	STRUCTURAL CONCRETE (1X62)	CU. YD.	
(5)	2401	STRUCTURAL CONCRETE (3B52)	CU. YD.	
(5)	2401	STRUCTURAL CONCRETE (3JM)	CU. YD.	
(5)	2401	BRIDGE SLAB CONCRETE (3Y42)	SQ. FT.	
	2401	INFILL SLAB CONCRETE (3YHPC-S)	CU. YD.	
	2401	TYPE CURB RAILING CONCRETE (3S52)	LIN. FT.	
	2401	TYPE P-4 (TL-4) RAILING CONCRETE (MOD.) (3S52)	LIN. FT.	
	2401	TYPE CONCRETE SNOW BARRIER (3S52)	LIN. FT.	
	2401	REINFORCEMENT BARS	POUND	
	2401	REINFORCEMENT BARS (EPOXY COATED)	POUND	
	2401	STRUCTURE EXCAVATION CLASS U	CU. YD.	
	2402	EXPANSION JOINT DEVICES TYPE 5	LIN. FT.	
	2402	EXPANSION JOINT DEVICES TYPE SPECIAL	LIN. FT.	
	2402	BEARING ASSEMBLY	EACH	
	2402	PRESTRESSED CONCRETE BEAMS MN54	LIN. FT.	
	2405	DIAPHRAGMS FOR TYPE MN54 PRESTRESSED BEAMS	LIN. FT.	
(6)	2411	ARCHITECTURAL CONCRETE TEXTURE (RECTANGULAR GRID)	SQ. YD.	
	2433	CEMENT GROUT	CU. YD.	
	2442	REMOVE EXISTING BRIDGE	EACH	
	2451	STRUCTURAL BACKFILL	CU. YD.	
	2452	C-I-P CONCRETE PILING DELIVERED 12"	LIN. FT.	
	2452	C-I-P CONCRETE PILING DRIVEN 12"	LIN. FT.	
	2452	STEEL H-PILING DRIVEN 12"	LIN. FT.	
	2452	STEEL H-PILING DRIVEN 14"	LIN. FT.	
	2452	STEEL H-PILING DELIVERED 12"	LIN. FT.	
	2452	STEEL H-PILING DELIVERED 14"	LIN. FT.	
	2452	C-I-P CONCRETE TEST PILE 90 LONG 12"	EACH	
	2452	STEEL H-TEST PILE 45 LONG 12"	EACH	
	2452	STEEL H-TEST PILE 50 LONG 12"	EACH	
	2452	STEEL H-TEST PILE 55 LONG 12"	EACH	
	2452	STEEL H-TEST PILE 65 LONG 12"	EACH	
	2452	STEEL H-TEST PILE 75 LONG 12"	EACH	
	2452	STEEL H-TEST PILE 65 LONG 14"	EACH	
	2452	PILE TIP PROTECTION 12"	EACH	
	2452	PILE TIP PROTECTION 14"	EACH	
	2481	MEMBRANE WATERPROOFING SYSTEM	SQ. YD.	
	2502	DRAINAGE SYSTEM TYPE (B910)	EACH	
	2545	CONDUIT SYSTEM (SYSTEM WIDE ELECTRICAL)	EACH	
(4)	2557	WIRE FENCE DESIGN SPECIAL	LIN. FT.	

NO.	DATE	BY	CHECK	DESIGN	REVISION / SUBMITTAL

DESIGNED BY: SSB | CHECKED BY: EJT
DRAWN BY: LMT | CHECKED BY: EJT

AECOM Kimley»Horn

90% SUBMISSION - 01/22/16

METROPOLITAN COUNCIL

SOUTHWEST Green Line LRT Extension

CIVIL - VOLUME 4G
LRT OVER BNSF
BRIDGE R0697
SCHEDULE OF QUANTITIES

DISCIPLINE: STRUCTURES
SHEET NAME: CBRR0697-BRG-TRN-001-1

SHEET 4 OF 118

Jan, 18 2016 01:35 pm V:\3400_ADC\CAD\SEGMENT E4\PLAN SHEETS\STRUCTURES\R0697\CBRR0697-BRG-TRN-001.dwg By: lisa.thompson

STRAY CURRENT CONTROL NOTES:

THE FOLLOWING STRAY CURRENT CONTROL NOTES ARE A SUPPLEMENT TO THE SYSTEMWIDE ELECTRICAL DRAWINGS. SEE SYSTEMS DRAWINGS, VOLUME 12 FOR ASSOCIATED DETAILS AND DOCUMENT CERTIFICATION RELATED TO STRAY CURRENT REQUIREMENTS.

1. ALL EPOXY COATED REBAR SHALL BE TIED TOGETHER USING NON-METALLIC OR NON-METALLIC COATED TIES. ALL EPOXY COATED REBAR SHALL BE ISOLATED FROM BLACK BARS. EPOXY COATED DOWELS SHALL BE USED AT ALL ABUTMENT AND PIER FOOTINGS.

2. ALL HORIZONTAL BLACK REBAR IN THE ABUTMENT FOOTINGS SHALL BE MADE ELECTRICALLY CONTINUOUS WITHIN FOOTING. STEEL SHELLS OF CIP PILES IN THE SOUTH ABUTMENT FOOTING AND H-PIILES IN THE NORTH ABUTMENT FOOTING SHALL BE MADE ELECTRICALLY CONTINUOUS WITH WELDED BLACK REBAR IN EACH FOOTING. SEE DETAILS ON SHEETS E0-SYS-CORR-DTL-001 AND 008 AND DETAIL 2 ON SHEET E0-SYS-CORR-DTL-013.

3. THE BEARINGS AT ALL PIERS SHALL PROVIDE ELECTRICAL ISOLATION OF THE STEEL ELEMENTS IN THE PRECAST BEAMS OR DECK FROM STEEL ELEMENTS IN THE PIER CAPS AND COLUMNS.

4. A ⅜" UNCOATED, GALVANIZED STEEL CABLE SHALL BE INSTALLED IN A 2" DIA. PVC CONDUIT RIPPED IN QUARTERS LONGITUDINALLY AND POSITIONED DIRECTLY BELOW EACH RUNNING RAIL. THE RIPPED PVC SHALL BE INSTALLED IN THE STRUCTURAL DECK AND BENEATH THE INFILL SLAB OR PLINTHS AND TIED TO THE TOP MAT OF REINFORCEMENT USING NON-METALLIC TIES. SEE DETAIL 3 ON SHEET E0-SYS-CORR-DTL-010.

5. AT DECK EXPANSION JOINTS THAT DO NOT HAVE A STRAY CURRENT BOND TEST STATION, ELECTRICAL CONTINUITY OF THE GALVANIZED STEEL CABLE SHALL BE MAINTAINED ACROSS THE EXPANSION JOINT. SUFFICIENT SLACK SHALL BE AVAILABLE IN THE CABLES THAT SPAN THE EXPANSION JOINT TO ACCOUNT FOR MOVEMENT OF THE JOINT. SEE DETAIL 1 ON SHEET E0-SYS-CORR-DTL-011.

6. INSTALL A STRAY CURRENT BOND TEST STATION ALONG THE BRIDGE AT EACH ABUTMENT HOUSING TWO INSULATED #1/0 AWG CABLES FROM GALVANIZED STEEL CABLES IN DECK, TWO #1/0 AWG CABLES FROM WELDED REBAR IN TRANSITION SLAB (IF PRESENT), AND 250 MCM CABLE TO GROUND ROD ARRAY AT BASE OF ABUTMENT. SEE DETAIL 1 OR 2 ON SHEET E0-SYS-CORR-DTL-003 AND SHEET E0-SYS-CORR-DTL-010. SEE NOTE 11. NO REFERENCE ELECTRODE IS TO BE INSTALLED IN THE AERIAL DECK. SUFFICIENT SLACK SHALL BE AVAILABLE IN THE CABLES THAT SPAN THE EXPANSION JOINT TO ACCOUNT FOR MOVEMENT OF THE JOINT.

STRAY CURRENT CONTROL NOTES (CONTINUED):

6. INSTALL A STRAY CURRENT BOND TEST STATION ALONG THE BRIDGE AT EACH ABUTMENT HOUSING TWO INSULATED #1/0 AWG CABLES FROM GALVANIZED STEEL CABLES IN DECK, TWO #1/0 AWG CABLES FROM WELDED REBAR IN TRANSITION SLAB (IF PRESENT), AND 250 MCM CABLE TO GROUND ROD ARRAY AT BASE OF ABUTMENT. SEE DETAIL 1 OR 2 ON SHEET E0-SYS-CORR-DTL-003 AND SHEET E0-SYS-CORR-DTL-010. SEE NOTE 11. NO REFERENCE ELECTRODE IS TO BE INSTALLED IN THE DECK. SUFFICIENT SLACK SHALL BE AVAILABLE IN THE CABLES THAT SPAN THE EXPANSION JOINT TO ACCOUNT FOR MOVEMENT AT THE JOINT.

7. AT PIERS 3 AND 7, INSTALL STRAY CURRENT BOND TEST STATION ALONG BRIDGE HOUSING TWO INSULATED #1/0 AWG CABLES FROM GALVANIZED STEEL CABLES ON EACH SIDE OF EXPANSION JOINT IN TRACK SLAB. SEE DETAIL 3 ON E0-SYS-CORR-DTL-003 AND DETAIL 1 ON SHEET E0-SYS-CORR-DTL-010. SEE NOTE 11. NO REFERENCE ELECTRODE IS TO BE INSTALLED IN THE DECK. SUFFICIENT SLACK SHALL BE AVAILABLE IN THE CABLES THAT SPAN THE EXPANSION JOINT TO ACCOUNT FOR MOVEMENT AT THE JOINT.

8. INSTALL STRAY CURRENT BOND TEST STATIONS ALONG THE EAST AND WEST SIDES OF THE SOUTH ABUTMENT HOUSING TWO #1/0 AWG CABLES FROM WELDED REBAR/STEEL PILE SHELLS IN ABUTMENT FOOTING, TWO #1/0 AWG CABLES FROM WELDED REBAR/STEEL PILE SHELLS IN RTW FOOTING AND TWO #14 HMWPE CABLES FROM COPPER/COPPER SULFATE REFERENCE CELLS INSTALLED UNDER THE ABUTMENT FOOTING AND UNDER THE RTW FOOTING. REFERENCE CELL SHALL BE INSTALLED IN SOIL WITHIN 1-FOOT OF PILE AND 1-FOOT BELOW BOTTOM OF FOOTING. SEE NOTE 11. SEE DETAIL 3 ON SHEET E0-SYS-CORR-DTL-003 AND DETAIL 3 ON SHEET E0-SYS-CORR-DTL-017.

9. INSTALL STRAY CURRENT TEST STATIONS AT THE EAST AND WEST ENDS OF THE NORTH ABUTMENT FOOTING HOUSING TWO #1/0 AWG CABLES FROM WELDED REBAR/H-PILES IN THE ABUTMENT FOOTING AND ONE #14 HMWPE CABLE FROM THE COPPER/COPPER SULFATE REFERENCE CELL INSTALLED UNDER THE ABUTMENT FOOTING. SEE NOTE 11. SEE DETAIL 4 ON SHEET E0-SYS-CORR-DTL-003, DETAIL 2 ON SHEET E0-SYS-CORR-DTL-013 AND DETAIL 2 ON SHEET E0-SYS-CORR-DTL-018.

10. INSTALL STRAY CURRENT GROUND ROD ARRAY NEAR BASE OF ABUTMENT. GROUND ROD ARRAY SHOULD EXHIBIT A MAXIMUM RESISTANCE TO EARTH OF 25 OHMS. USE 250 MCM THWN CABLE TO INTERCONNECT GROUND RODS AND AS GROUND CABLE TO STRAY CURRENT COLLECTION MAT TEST STATIONS AT END OF BRIDGE STRUCTURE. 250 MCM CABLE SHALL RUN INSIDE 2" SCH 80 PVC CONDUIT THAT IS EMBEDDED WITHIN ABUTMENT. SEE DETAIL 3 ON SHEET E0-SYS-CORR-DTL-013.

11. ALL STRAY CURRENT TEST STATIONS SHALL BE INSTALLED AT LOCATIONS WHERE THEY WILL BE ACCESSIBLE AFTER COMPLETION OF ALL CONSTRUCTION ACTIVITIES AND DURING REVENUE OPERATIONS OF THE LRT SYSTEM.

12. WELDED BLACK BAR IN RTW-E405, RTW-E407, AND RTW-E412 SHALL BE ISOLATED FROM WELDED BLACK BAR IN ABUTMENT FOOTINGS.

13. THE CONCRETE/SOIL INTERFACE ALONG EACH STEEL SLEEVE FOR THE CIP PILES UNDER THE FOOTING FOR THE SOUTH ABUTMENT AND ALONG EACH H-PILE UNDER THE FOOTINGS FOR THE NORTH ABUTMENT AND PIERS 1 THROUGH 8 SHALL BE COATED WITH A DIELECTRIC COATING OR HEAT SHRINK SLEEVE. THE COATING SHALL EXTEND INTO THE CONCRETE FOOTING AT LEAST 6 INCHES AND EXTEND A MINIMUM OF 18 INCHES INTO THE SOIL ALONG THE EXTERNAL PILE SURFACE BELOW THE BOTTOM OF THE FOOTING.

NO.	DATE	BY	CHECK	DESIGN	REVISION / SUBMITTAL

DESIGNED BY: SSB | CHECKED BY: EJT
DRAWN BY: LMT | CHECKED BY: EJT

AECOM Kimley»Horn

90% SUBMISSION - 01/22/16

METROPOLITAN COUNCIL

SOUTHWEST Green Line LRT Extension

CIVIL - VOLUME 4G
LRT OVER BNSF
BRIDGE R0697
STRAY CURRENT NOTES

DISCIPLINE: STRUCTURES
SHEET NAME: CBRR0697-BRG-TRN-001-2

SHEET 5 OF 118

Jan, 18 2016 01:35 pm v:\3400_ADC\CAD\SEGMENT E4\PLAN SHEETS\STRUCTURES\R0697\CBRR0697-BRG-TRN-001.dwg By: lisa.thompson

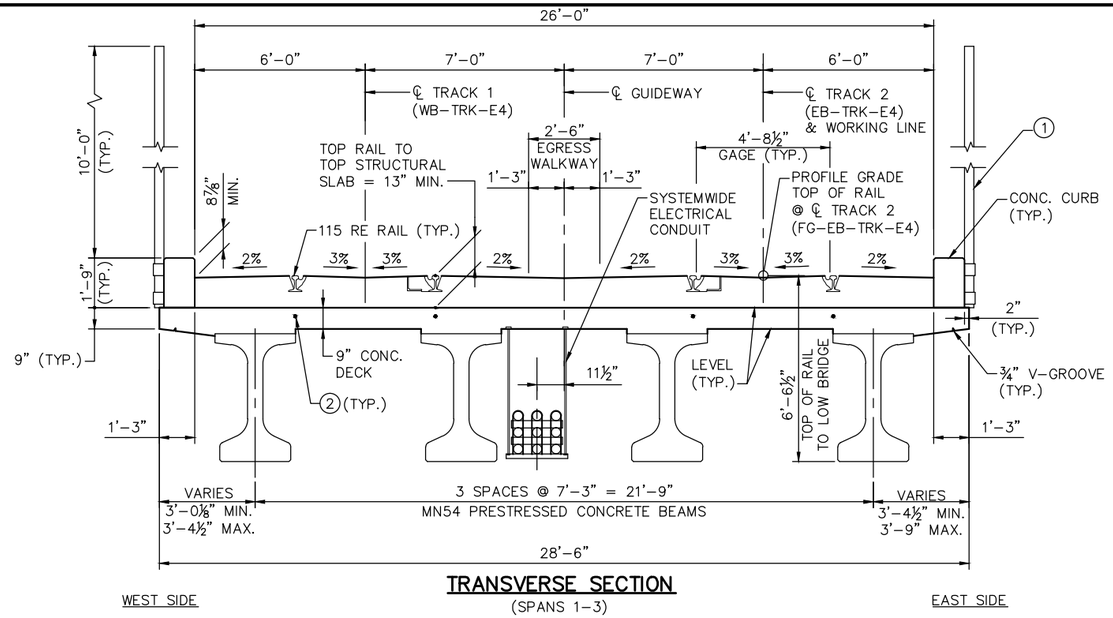

TRANSVERSE SECTION

(SPANS 1-3)

0 1.5' 3' 6'

SCALE IN FEET

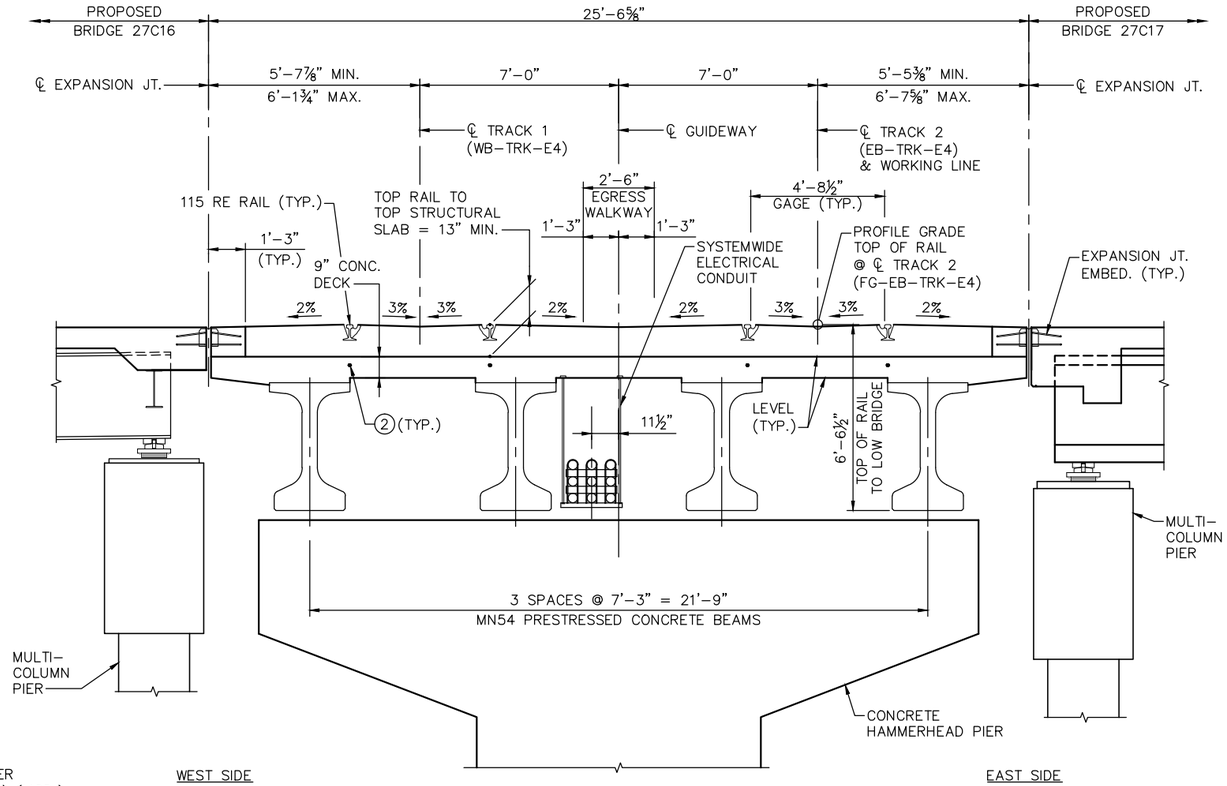

TRANSVERSE SECTION

CSAH 40 (GLENWOOD AVE)

0 1.5' 3' 6'

SCALE IN FEET

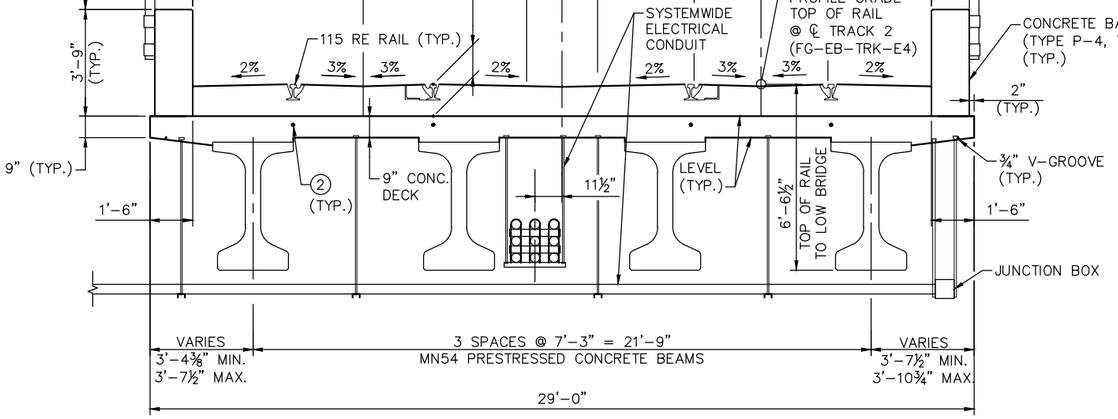

TRANSVERSE SECTION

(STA. 2933+80.29 TO 2935+03.23 AND STA. 2935+82.76 TO 2937+69.02)

0 1.5' 3' 6'

SCALE IN FEET

NOTES:

1. WIRE FENCE, SEE SHEET 89 FOR DETAILS.
2. ⅜" UNCOATED GALVANIZED STEEL CABLE. SEE STRAY CURRENT NOTE 4 ON SHEET 5 FOR ADDITIONAL DETAILS.

NO.	DATE	BY	CHECK	DESIGN	REVISION / SUBMITTAL

DESIGNED BY: KAE CHECKED BY: EJT

DRAWN BY: LMT CHECKED BY: EJT

AECOM Kimley»Horn

90% SUBMISSION - 01/22/16

METROPOLITAN COUNCIL

SOUTHWEST Green Line LRT Extension

CIVIL - VOLUME 4G
LRT OVER BNSF
BRIDGE R0697
TRANSVERSE SECTION 1

DISCIPLINE: STRUCTURES

SHEET NAME: CBRR0697-BRG-TRN-001-3

SHEET 6 OF 118

Jan, 18 2016 01:35 pm V:\3400_ADC\CAD\SEGMENT E4\PLAN SHEETS\STRUCTURES\R0697\CBRR0697-BRG-TRN-001.dwg By: lisa.thompson

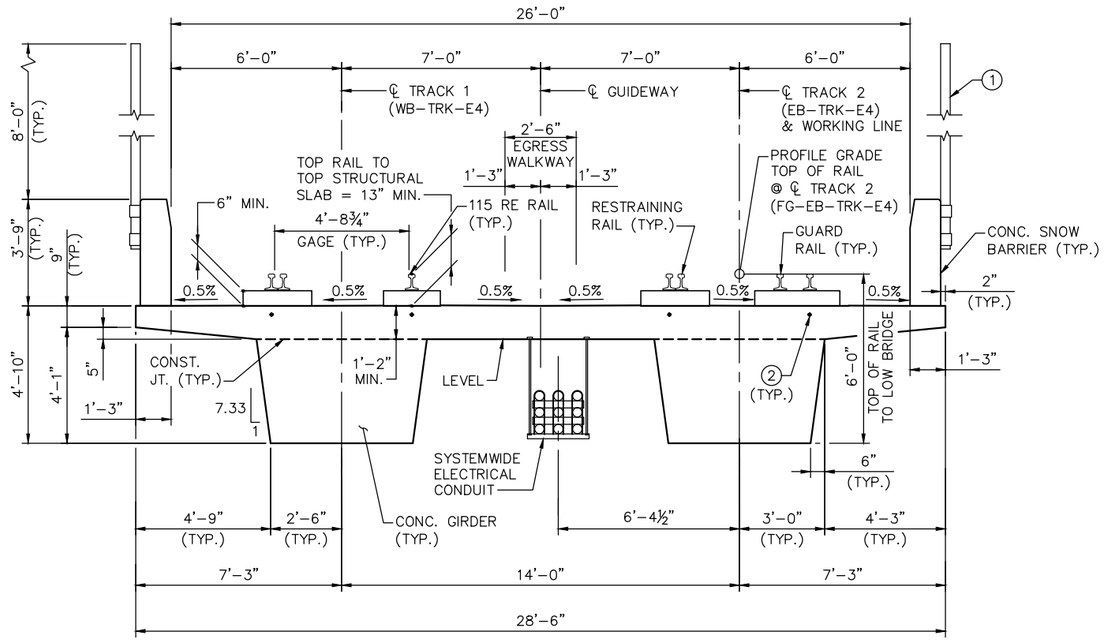

TRANSVERSE SECTION
(SPANS 9–10)

0 1.5' 3' 6'
SCALE IN FEET

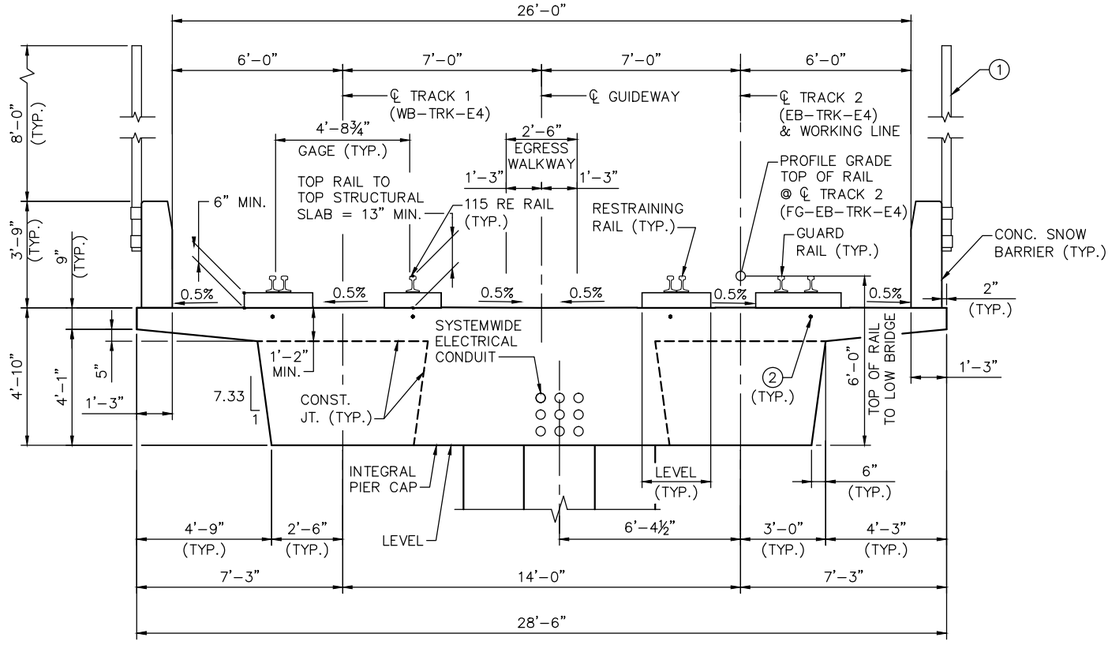

TRANSVERSE SECTION
(UNIT 2 AT PIER 9)

0 1.5' 3' 6'
SCALE IN FEET

NOTES:

1. 8'–0" HEIGHT WIRE FENCE, SEE SHEET 89 FOR DETAILS.
2. ⅜" UNCOATED GALVANIZED STEEL CABLE. SEE STRAY CURRENT NOTE 4 ON SHEET 5 FOR ADDITIONAL DETAILS.

NO.	DATE	BY	CHECK	DESIGN	REVISION / SUBMITTAL

DESIGNED BY: KAE | CHECKED BY: EJT
DRAWN BY: LMT | CHECKED BY: EJT

AECOM Kimley»Horn

90% SUBMISSION - 01/22/16

METROPOLITAN COUNCIL

SOUTHWEST Green Line LRT Extension

CIVIL - VOLUME 4G
LRT OVER BNSF
BRIDGE R0697
TRANSVERSE SECTION 2

DISCIPLINE: STRUCTURES

SHEET NAME: CBRR0697-BRG-TRN-001-4

SHEET 7 OF 118

Jan, 18 2016 01:35 pm V:\3400_ADC\CAD\SEGMENT E4\PLAN SHEETS\STRUCTURES\R0697\CBRR0697-BRG-TRN-001.dwg By: lisa.thompson

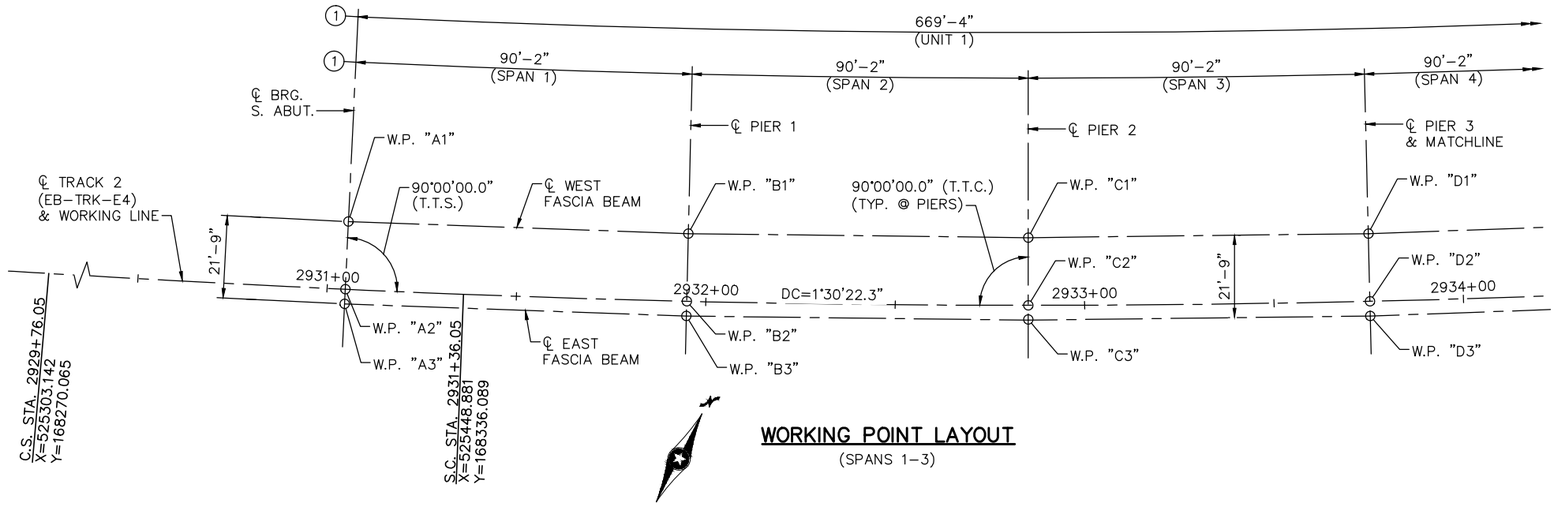

WORKING POINT LAYOUT
(SPANS 1–3)

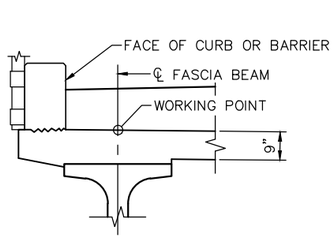

WEST SIDE

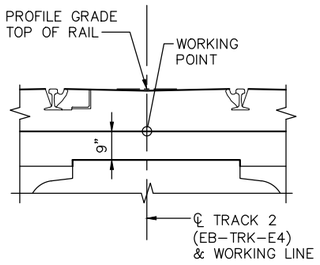

WORKING POINT LOCATIONS
(UNIT 1)

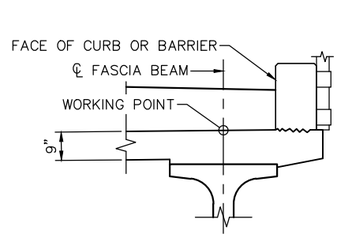

EAST SIDE

DIMENSIONS BETWEEN WORKING POINTS - UNIT 1														COORDINATES		ELEVATION				
POINT	STATION	A1	A2	A3	B1	B2	B3	C1	C2	C3	D1	D2	D3	X	Y	TOP OF RAIL	TOP OF SLAB	TOP OF SLAB TO BRIDGE SEAT	BRIDGE SEAT	POINT
A1	2931+04.79	---	17.88	---	89.76	91.73	92.61	---	---	181.31	---	---	---	525413.059	168339.135		841.35	6.31	835.04	A1
A2	2931+04.79	---	---	3.88	---	90.17	90.30	---	---	---	---	---	---	525420.543	168322.902	842.47	841.35			A2
A3	2931+04.79	---	---	---	92.59	---	90.26	181.30	---	---	---	---	---	525422.165	168319.382		841.35	6.31	835.04	A3
B1	2931+94.96	---	---	---	---	17.88	---	89.74	91.71	92.59	---	---	181.29	525494.150	168377.620		844.64	6.10	838.54	B1
B2	2931+94.96	---	---	---	---	---	3.88	---	90.16	90.29	---	---	---	525502.004	168361.563	845.76	844.64			B2
B3	2931+94.96	---	---	---	---	---	---	92.59	---	90.26	181.29	---	---	525503.707	168358.082		844.64	6.10	838.54	B3
C1	2932+85.13	---	---	---	---	---	---	---	17.87	---	89.74	91.71	92.59	525574.292	168418.001		847.12	5.99	841.13	C1
C2	2932+85.13	---	---	---	---	---	---	---	---	3.88	---	90.16	90.29	525582.524	168402.134	848.24	847.12			C2
C3	2932.85.13	---	---	---	---	---	---	---	---	---	92.59	---	90.26	525584.309	168398.695		847.12	5.99	841.13	C3
D1	2933+75.29	---	---	---	---	---	---	---	---	---	---	17.87	---	525653.455	168460.269		848.79	5.84	842.95	D1
D2	2933+75.29	---	---	---	---	---	---	---	---	---	---	---	3.88	525662.060	168444.602	849.91	848.79			D2
D3	2933+75.29	---	---	---	---	---	---	---	---	---	---	---	---	525663.926	168441.206		848.79	5.84	842.95	D3

NOTES:

1. DIMENSIONS MEASURED ALONG ℄ TRACK 2.
2. STOOL HEIGHTS AT PIERS ARE ADJUSTED TO MAKE PEDESTAL ELEVATIONS THE SAME PER SUBSTRUCTURE. VALUES GIVEN IN THE TABLE ARE AT THE CENTERLINE OF THE PIER.

TOP OF DECK TO BRIDGE SEAT						
	DECK THICKNESS	STOOL HEIGHT (2)	BEAM HEIGHT	BEARING HEIGHT	TOTAL	
					INCHES	FEET
S. ABUT.	9"	2 1/2"	54"	10 1/4"	75 3/4	6.31
PIER 1	9"	2 1/2"	54"	7 3/4"	73 1/4	6.10
PIER 2	9"	2 3/8"	54"	6 1/2"	71 7/8	5.99
PIER 3	9"	2 1/2"	54"	4 5/8"	70 1/8	5.84

NO.	DATE	BY	CHECK	DESIGN	REVISION / SUBMITTAL

DESIGNED BY: KAE | CHECKED BY: EJT
DRAWN BY: LMT | CHECKED BY: EJT

AECOM Kimley»Horn

90% SUBMISSION - 01/22/16

METROPOLITAN COUNCIL

SOUTHWEST Green Line LRT Extension

CIVIL - VOLUME 4G
LRT OVER BNSF
BRIDGE R0697
BRIDGE LAYOUT 1

DISCIPLINE: STRUCTURES
SHEET NAME: CBRR0697-BRG-SUP-001-1

SHEET 8 OF 118

Jan, 18 2016 01:36 pm V:\3400_ADC\CAD\SEGMENT E4\PLAN SHEETS\STRUCTURES\R0697\CBRR0697-BRG-SUP-001.dwg By: lisa.thompson

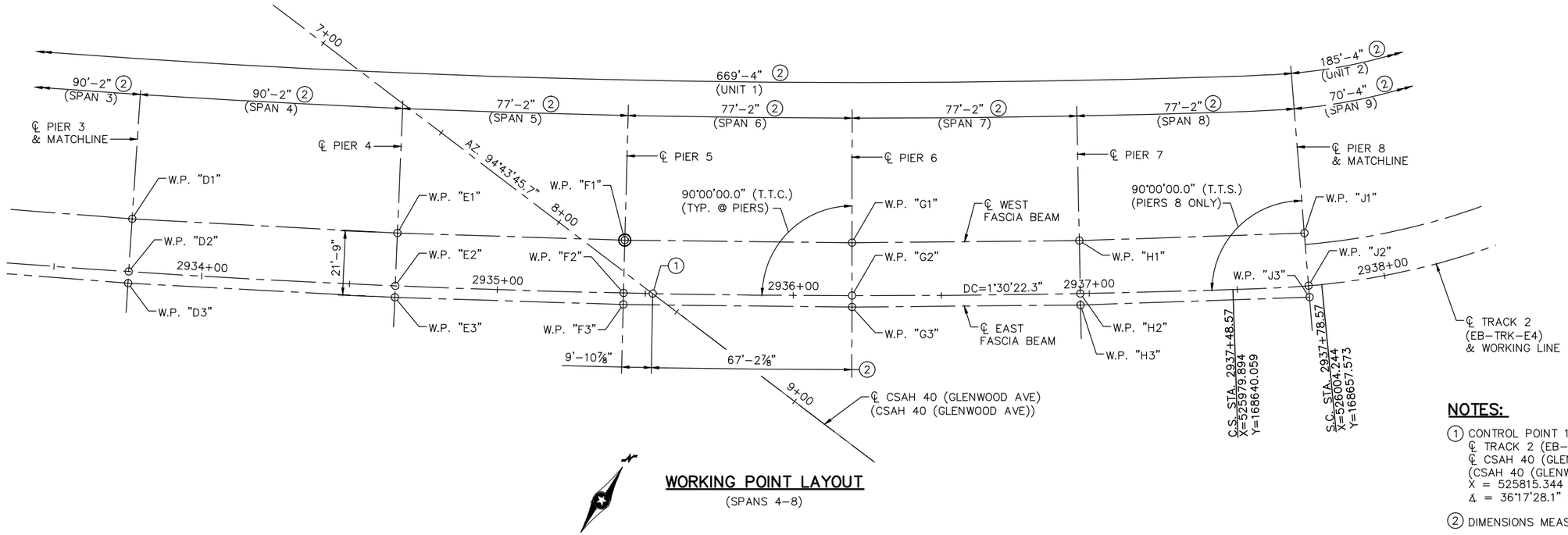

WORKING POINT LAYOUT

(SPANS 4–8)

NOTES:

1. CONTROL POINT 1
   ℄ TRACK 2 (EB-TRK-E4) P.O.C. 2935+52.51
   ℄ CSAH 40 (GLENWOOD AVE)
   (CSAH 40 (GLENWOOD AVE)) P.O.T. 8+39.83
   X = 525815.344 Y = 168533.506
   Δ = 36°17'28.1" (T.T.C.)
2. DIMENSIONS MEASURED ALONG ℄ TRACK 2.
3. STOOL HEIGHTS AT PIERS ARE ADJUSTED TO MAKE PEDESTAL ELEVATIONS THE SAME PER SUBSTRUCTURE. VALUES GIVEN IN THE TABLE ARE AT THE CENTERLINE OF THE PIER.

DIMENSIONS BETWEEN WORKING POINTS - UNIT 1 (CONTINUED)

POINT	STATION	D1	D2	D3	E1	E2	E3	F1	F2	F3	G1	G2	G3	H1	H2	H3	J1	J2	J3	COORDINATES X	COORDINATES Y	ELEVATION TOP OF RAIL	ELEVATION TOP OF SLAB	ELEVATION TOP OF SLAB TO BRIDGE SEAT	ELEVATION BRIDGE SEAT	POINT
D1	2933+75.29	---	17.87	---	89.74	91.71	92.59	---	---	168.42	---	---	---	---	---	---	---	---	---	525653.455	168460.269		848.79	5.84	842.95	D1
D2	2933+75.29	---	---	3.88	---	90.16	90.29	---	---	---	---	---	---	---	---	---	---	---	---	525662.060	168444.602	849.91	848.79			D2
D3	2933+75.29	---	---	---	92.59	---	90.26	168.42	---	---	---	---	---	---	---	---	---	---	---	525663.926	168441.206		848.79	5.84	842.95	D3
E1	2934+65.46	---	---	---	---	17.87	---	76.80	79.03	80.04	---	---	155.56	---	---	---	---	---	---	525731.593	168504.402		849.64	5.72	843.92	E1
E2	2934+65.46	---	---	---	---	---	3.88	---	77.17	77.30	---	---	---	---	---	---	---	---	---	525740.567	168488.943	850.76	849.64			E2
E3	2934+65.46	---	---	---	---	---	---	80.04	---	77.25	155.56	---	---	---	---	---	---	---	---	525742.513	168485.592		849.64	5.72	843.92	E3
F1	2935+42.63	---	---	---	---	---	---	---	17.87	---	76.80	79.03	80.03	---	---	155.56	---	---	---	525797.621	168543.635		850.06	5.75	844.31	F1
F2	2935+42.63	---	---	---	---	---	---	---	---	3.88	---	77.16	77.30	---	---	---	---	---	---	525806.907	168528.362	851.18	850.06			F2
F3	2935+42.63	---	---	---	---	---	---	---	---	---	80.03	---	77.24	155.56	---	---	---	---	---	525808.920	168525.051		850.06	5.75	844.31	F3
G1	2936+19.79	---	---	---	---	---	---	---	---	---	---	17.88	---	76.81	79.04	80.04	---	---	155.67	525862.834	168584.196		850.49	5.95	844.54	G1
G2	2936+19.79	---	---	---	---	---	---	---	---	---	---	---	3.87	---	77.17	77.31	---	---	---	525872.428	168569.114	851.61	850.49			G2
G3	2936+19.79	---	---	---	---	---	---	---	---	---	---	---	---	80.04	---	77.25	---	---	---	525874.508	168565.844		850.49	5.95	844.54	G3
H1	2936+96.96	---	---	---	---	---	---	---	---	---	---	---	---	---	17.87	---	76.05	78.95	80.09	525927.218	168626.075		850.91	6.07	844.84	H1
H2	2936+96.96	---	---	---	---	---	---	---	---	---	---	---	---	---	---	3.87	---	77.16	77.44	525937.116	168611.191	852.03	850.91			H2
H3	2936+96.96	---	---	---	---	---	---	---	---	---	---	---	---	---	---	---	79.41	---	77.40	525939.262	168607.964		850.91	6.07	844.84	H3
J1	2937+74.13	---	---	---	---	---	---	---	---	---	---	---	---	---	---	---	---	17.87	---	525989.928	168669.104		851.34	6.21	845.13	J1
J2	2937+74.13	---	---	---	---	---	---	---	---	---	---	---	---	---	---	---	---	---	3.87	526000.730	168654.862	852.46	851.34			J2
J3	2937+74.13	---	---	---	---	---	---	---	---	---	---	---	---	---	---	---	---	---	---	526003.072	168651.774		851.34	6.21	845.13	J3

TOP OF DECK TO BRIDGE SEAT

	DECK THICKNESS	STOOL HEIGHT (3)	BEAM HEIGHT	BEARING HEIGHT	TOTAL INCHES	TOTAL FEET
PIER 3	9"	2 1/2"	54"	4 5/8"	70 1/8	5.84
PIER 4	9"	2 3/8"	54"	3 1/4"	68 5/8	5.72
PIER 5	9"	2 3/4"	54"	3 1/4"	69	5.75
PIER 6	9"	2 1/2"	54"	5 7/8"	71 3/8	5.95
PIER 7	9"	2 3/4"	54"	7 1/8"	72 7/8	6.07
PIER 8 @ PCB	9"	2 5/8"	54"	8 7/8"	74 1/2	6.21

NO.	DATE	BY	CHECK	DESIGN	REVISION / SUBMITTAL

DESIGNED BY: KAE CHECKED BY: EJT
DRAWN BY: LMT CHECKED BY: EJT

AECOM Kimley»Horn

90% SUBMISSION - 01/22/16

METROPOLITAN COUNCIL

SOUTHWEST Green Line LRT Extension

CIVIL - VOLUME 4G
LRT OVER BNSF
BRIDGE R0697
BRIDGE LAYOUT 2

DISCIPLINE: STRUCTURES
SHEET NAME: CBRR0697-BRG-SUP-001-2

SHEET 9 OF 118

Jan. 18 2016 01:36 pm V:\3400_ADC\CAD\SEGMENT E4\PLAN SHEETS\STRUCTURES\R0697\CBRR0697-BRG-SUP-001.dwg By: lisa.thompson

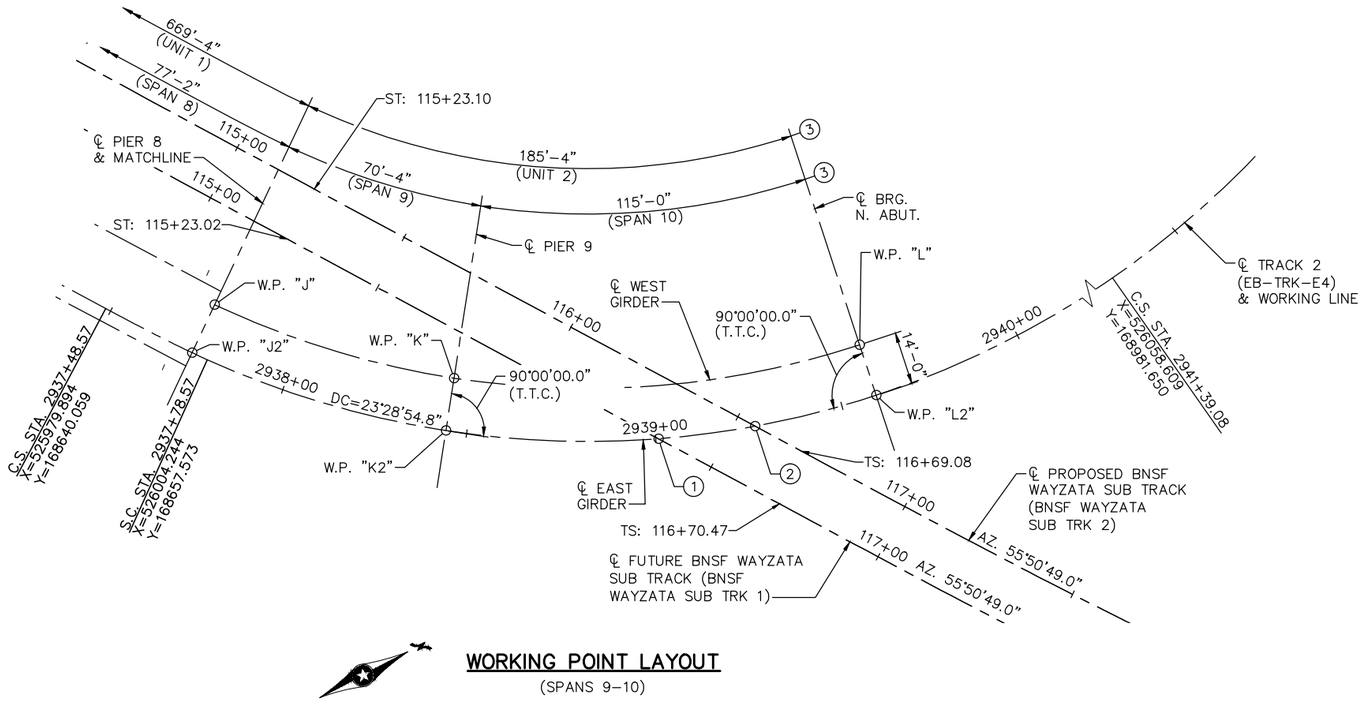

WORKING POINT LAYOUT

(SPANS 9–10)

NOTES:

1. ℄ TRACK 2 (EB–TRK–E4) P.O.C. 2939+00.75
   ℄ PROPOSED FUTURE BNSF WAYZATA SUB TRACK (BNSF WAYZATA SUB TRK 1) P.O.T. 116+34.22
   X = 526077.857 Y = 168753.486
   Δ = 32°40'49.9" (T.T.C.)
2. ℄ TRACK 2 (EB–TRK–E4) P.O.C. 2939+26.47
   ℄ PROPOSED BNSF WAYZATA SUB TRACK (BNSF WAYZATA SUB TRK 2) P.O.T. 116+55.19
   X = 526086.701 Y = 168777.597
   Δ = 38°43'10.1" (T.T.C.)
3. DIMENSIONS MEASURED ALONG ℄ TRACK 2.

DIMENSIONS BETWEEN WORKING POINTS - UNIT 2								COORDINATES		ELEVATION				
POINT	STATION	J	J2	K	K2	L	L2	X	Y	TOP OF RAIL	TOP OF SLAB	TOP OF SLAB TO BRIDGE SEAT	BRIDGE SEAT	POINT
J	2937+74.13	---	14.00	66.08	69.49	170.54	176.22	525992.270	168666.016	852.55	851.34	5.51	845.83	J
J2	2937+74.13	---	---	69.47	70.09	176.20	180.91	526000.730	168654.862	852.46	851.34	5.51	845.83	J2
K	2938+44.46	---	---	---	14.00	107.40	111.50	526038.700	168713.040	852.81	851.69			K
K2	2938+44.46	---	---	---	---	111.50	113.94	526049.972	168704.736	852.82	851.69			K2
L	2939+59.46	---	---	---	---	---	14.00	526080.451	168811.994	851.91	850.79	5.56	845.23	L
L2	2939+59.46	---	---	---	---	---	---	526094.264	168809.714	852.09	850.79	5.56	845.23	L2

TOP OF DECK TO BRIDGE SEAT					
	DECK THICKNESS	BEAM HEIGHT	BEARING HEIGHT	TOTAL	
				INCHES	FEET
PIER 8 @ GIRDER	14 1/2"	44"	7 5/8"	66 1/8	5.51
N. ABUT.	14 1/2"	44"	8 1/4"	66 3/4	5.56

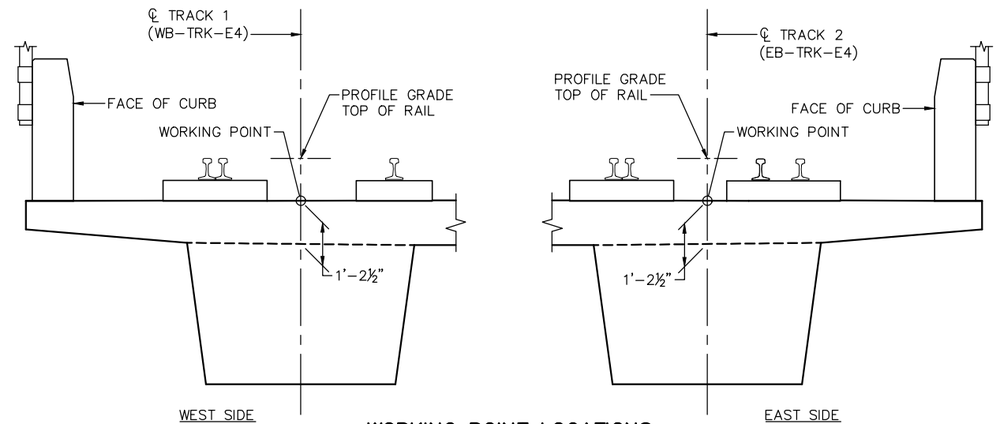

WORKING POINT LOCATIONS

(UNIT 2)

NO.	DATE	BY	CHECK	DESIGN	REVISION / SUBMITTAL

DESIGNED BY: KAE CHECKED BY: EJT
DRAWN BY: LMT CHECKED BY: EJT

AECOM Kimley»Horn

90% SUBMISSION - 01/22/16

METROPOLITAN COUNCIL

SOUTHWEST Green Line LRT Extension

CIVIL - VOLUME 4G
LRT OVER BNSF
BRIDGE R0697
BRIDGE LAYOUT 3

DISCIPLINE: STRUCTURES
SHEET NAME: CBRR0697-BRG-SUP-001-3

SHEET 10 OF 118

Jan, 18 2016 01:36 pm V:\3400_ADC\CAD\SEGMENT E4\PLAN SHEETS\STRUCTURES\R0697\CBRR0697-BRG-SUP-001.dwg By: lisa.thompson

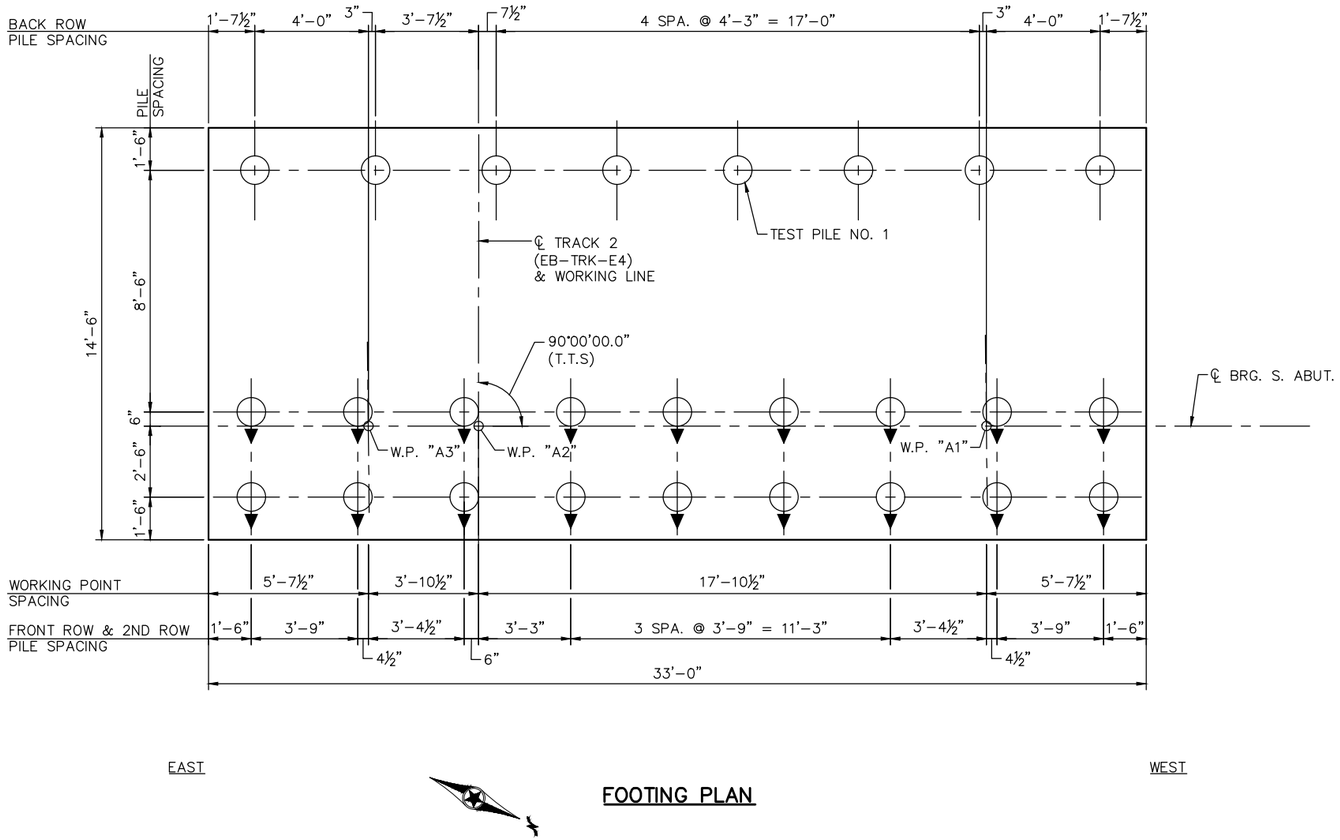

FOOTING PLAN

SOUTH ABUTMENT COMPUTED PILE LOAD - TONS/PILE	
FACTORED DEAD LOAD + EARTH PRESSURE	64.9
FACTORED LIVE LOAD	30.5
* FACTORED DESIGN LOAD	95.4

* BASED ON STRENGTH V LOAD COMBINATION.

SOUTH ABUTMENT REQUIRED NOMINAL PILE BEARING RESISTANCE FOR CIP PILES Rn - TONS/PILE		
FIELD CONTROL METHOD	φdyn	* Rn
PDA	0.65	147

* Rn = (FACTORED DESIGN LOAD) / φdyn

GENERAL PILE NOTES

1 C-I-P CONCRETE TEST PILES 90 FT. LONG
25 C-I-P CONCRETE PILES EST. 80 FT. LENGTH
26 C-I-P CONCRETE PILES REQ'D FOR SOUTH ABUTMENT

PILE SPACING SHOWN IS AT BOTTOM OF FOOTING.

PILES MARKED THUS ◯► TO BE BATTERED 3" PER FOOT IN DIRECTION SHOWN.

PILES TO HAVE A NOMINAL DIAMETER OF 12" AND MINIMUM WALL THICKNESS OF ¼".

FOR PILE SPLICE DETAILS SEE DETAIL B201.

NO.	DATE	BY	CHECK	DESIGN	REVISION / SUBMITTAL

DESIGNED BY: KAE | CHECKED BY: BLF
DRAWN BY: LMT | CHECKED BY: EJT

AECOM Kimley»Horn

90% SUBMISSION - 01/22/16

METROPOLITAN COUNCIL

SOUTHWEST Green Line LRT Extension

CIVIL - VOLUME 4G
LRT OVER BNSF
BRIDGE R0697
SOUTH ABUTMENT DETAILS 1

DISCIPLINE: STRUCTURES
SHEET NAME: CBRR0697-BRG-ABT-001-1

SHEET 11 OF 118

Jan, 18 2016 01:37 pm V:\3400_ADC\CAD\SEGMENT E4\PLAN SHEETS\STRUCTURES\R0697\CBRR0697-BRG-ABT-001.dwg By: lisa.thompson

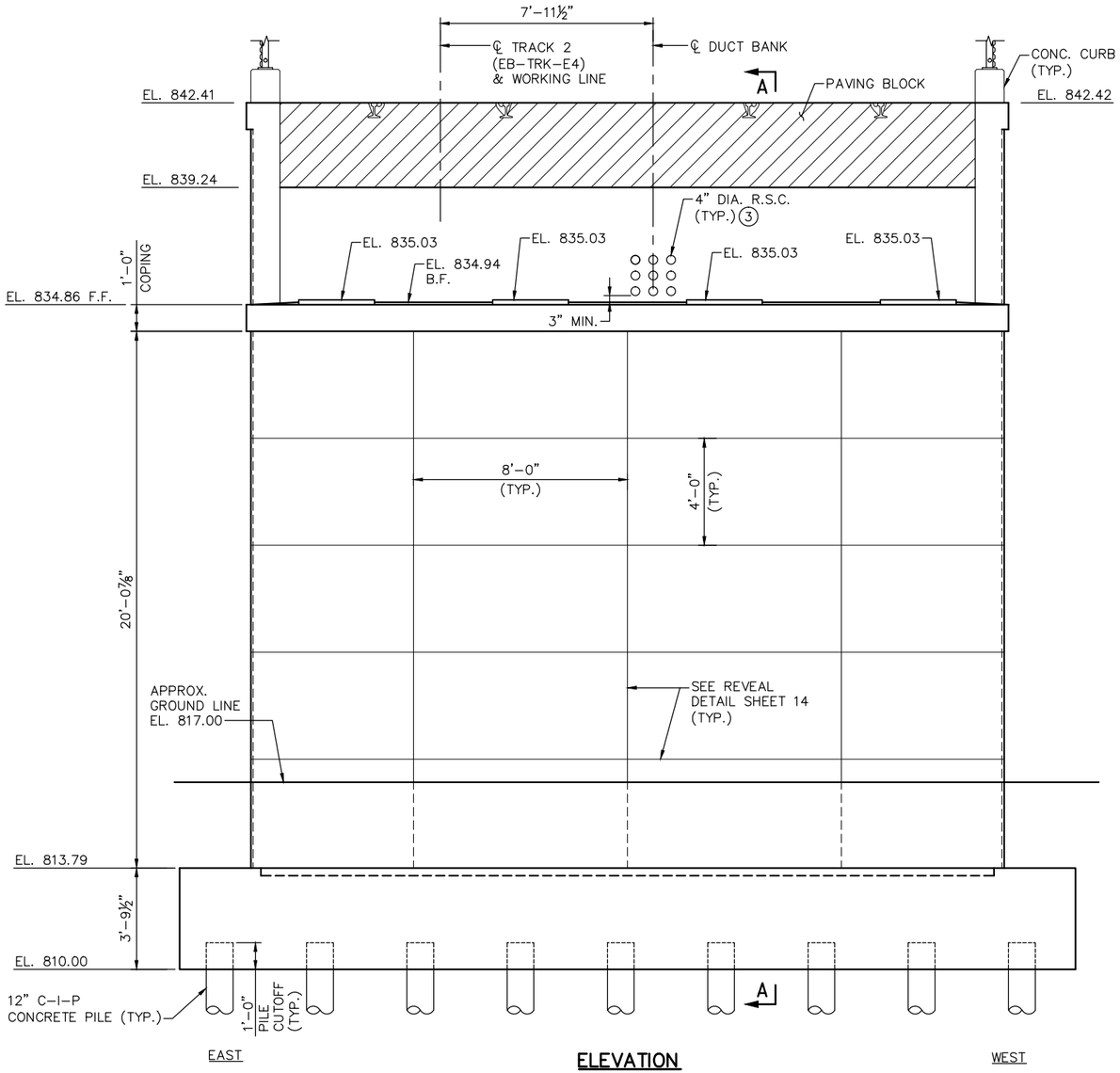

ELEVATION

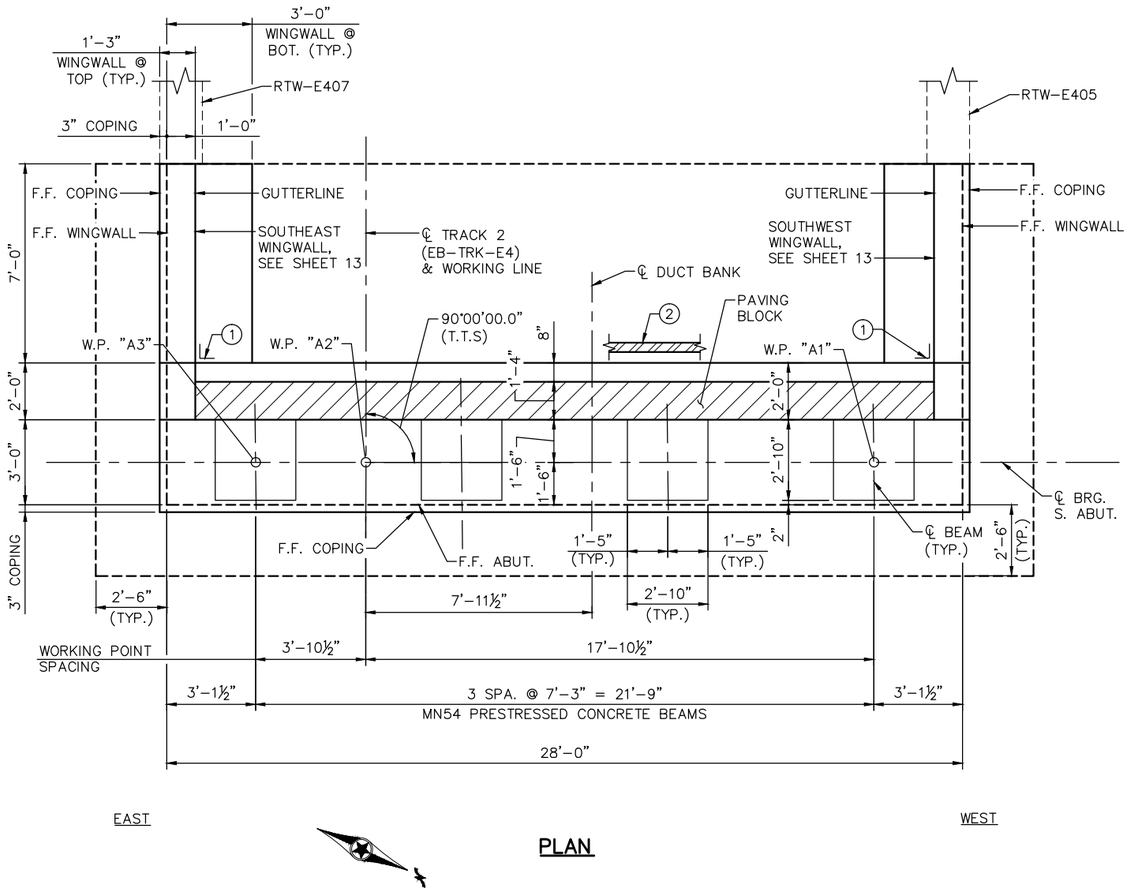

EAST WEST

PLAN

NOTES:

FOR SECTION A-A, SEE SHEET 14.

PAVING BLOCK HATCHED AREA INDICATES THAT PORTION TO BE PLACED WITH THE INFILL SLAB CONCRETE.

(1) MEMBRANE WATERPROOFING SYSTEM PER MnDOT 2481.3.B.

(2) PERFORATED PIPE, SEE DETAIL B910 FOR DRAINAGE DETAILS.

(3) SEE SHEETS 90-93 FOR SYSTEMWIDE ELECTRICAL CONDUIT SYSTEM DETAILS.

NO.	DATE	BY	CHECK	DESIGN	REVISION / SUBMITTAL

DESIGNED BY: KAE | CHECKED BY: BLF
DRAWN BY: LMT | CHECKED BY: EJT

AECOM Kimley»Horn

90% SUBMISSION - 01/22/16

METROPOLITAN COUNCIL

SOUTHWEST Green Line LRT Extension

CIVIL - VOLUME 4G
LRT OVER BNSF
BRIDGE R0697
SOUTH ABUTMENT DETAILS 2

DISCIPLINE: STRUCTURES
SHEET NAME: CBRR0697-BRG-ABT-001-2

SHEET 12 OF 118

Jan, 18 2016 01:37 pm V:\3400_ADC\CAD\SEGMENT E4\PLAN SHEETS\STRUCTURES\R0697\CBRR0697-BRG-ABT-001.dwg By: lisa.thompson

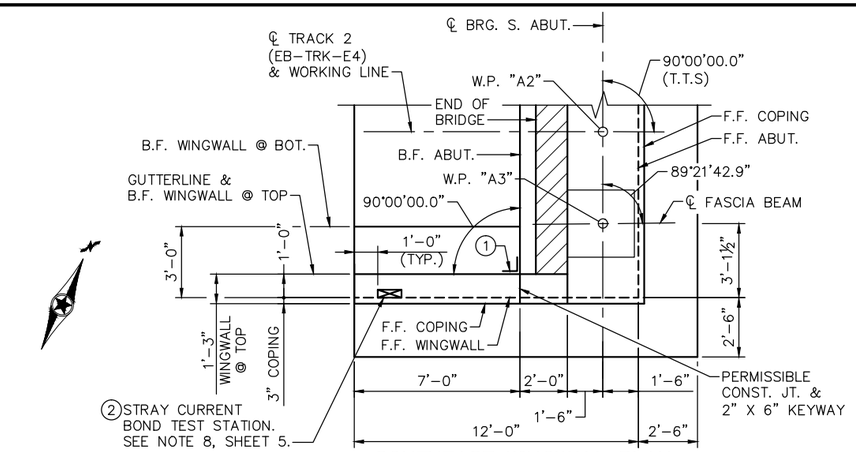

SOUTHEAST WINGWALL PLAN

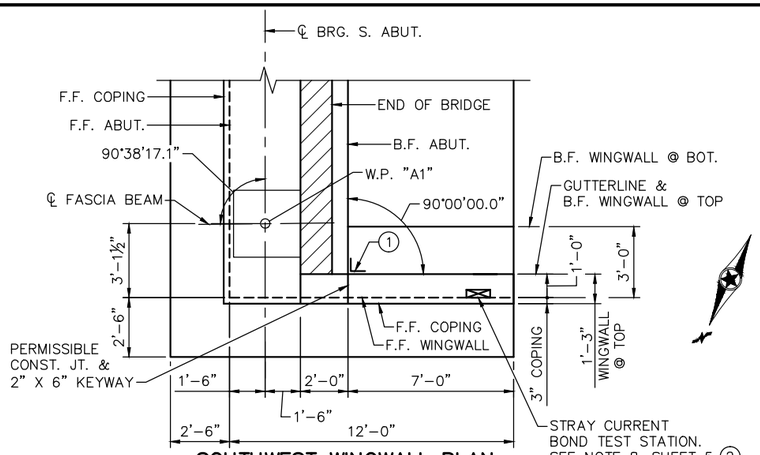

SOUTHWEST WINGWALL PLAN

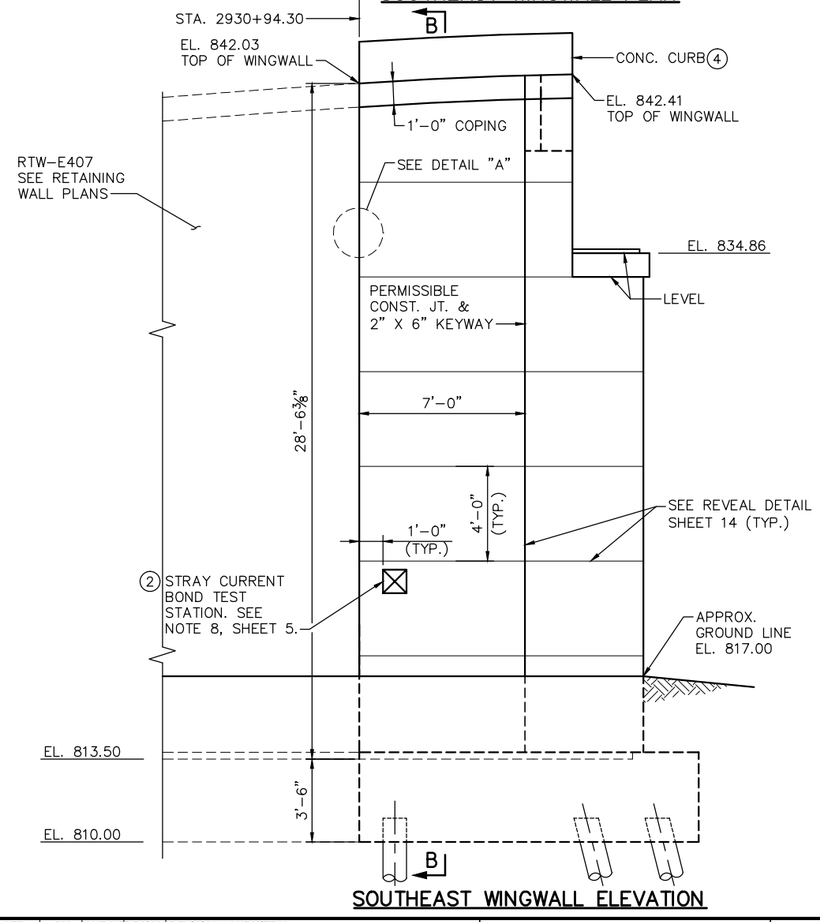

SOUTHEAST WINGWALL ELEVATION

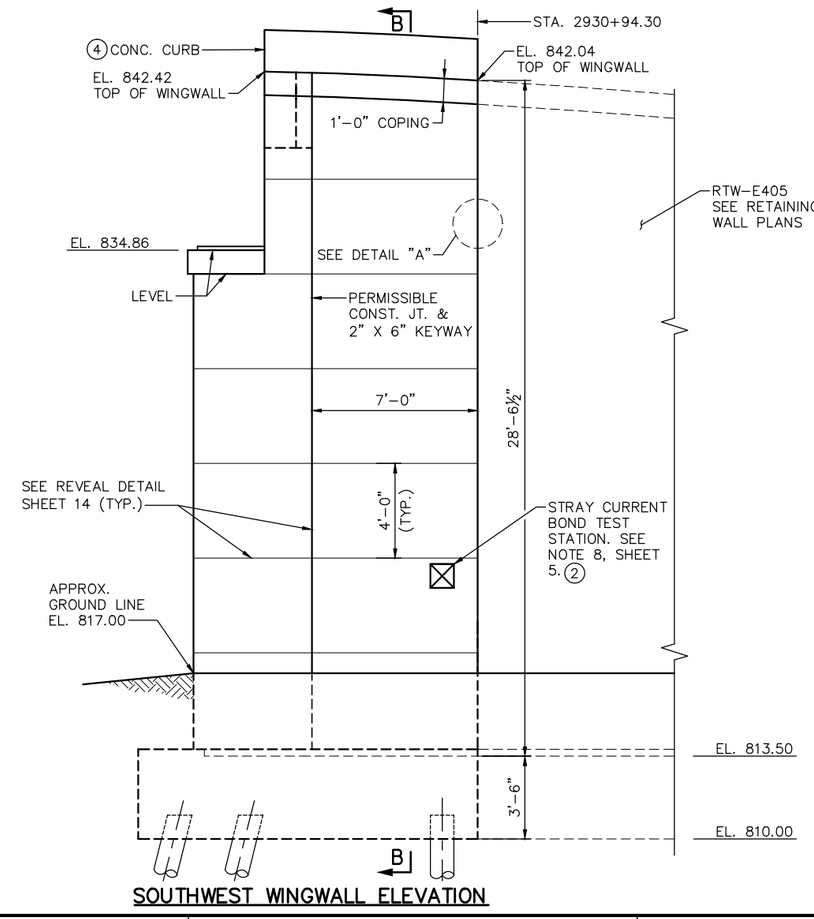

SOUTHWEST WINGWALL ELEVATION

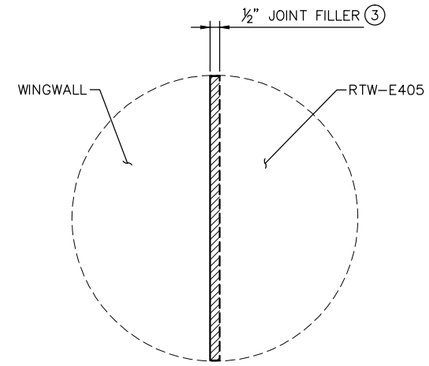

DETAIL A

(SOUTHWEST WINGWALL SHOWN)

NOTES:

PAVING BLOCK HATCHED AREA INDICATES THAT PORTION TO BE PLACED WITH THE INFILL SLAB CONCRETE.

FOR SECTION B–B, SEE SHEET 14.

1. MEMBRANE WATERPROOFING SYSTEM PER MnDOT SPEC. 2481.3.B.
2. INSTALL STRAY CURRENT JUNCTION BOX. SEE DRAWING E0–SYS–CORR–DTL–003 FOR DETAILS. CABLES WILL BE ROUTED TO JUNCTION BOXES BY CONTRACTOR. AFTER CONDUITS ARE INSTALLED, REMAINING BLOCKOUT SPACE TO BE FILLED AND SEALED WITH NON–SHRINK GROUT (TYP. FOR ALL BLOCKOUTS).
3. JOINT FILLER SHALL BE CORK PER MnDOT SPEC. 2401.3E3.
4. SEE SHEET 86 FOR CONCRETE CURB DETAILS.

NO.	DATE	BY	CHECK	DESIGN	REVISION / SUBMITTAL

DESIGNED BY: KAE | CHECKED BY: BLF
DRAWN BY: LMT | CHECKED BY: EJT

AECOM Kimley»Horn

90% SUBMISSION - 01/22/16

METROPOLITAN COUNCIL

SOUTHWEST Green Line LRT Extension

CIVIL - VOLUME 4G
LRT OVER BNSF
BRIDGE R0697
SOUTH ABUTMENT DETAILS 3

DISCIPLINE: STRUCTURES

SHEET NAME: CBRR0697-BRG-ABT-001-3

SHEET 13 OF 118

Jan, 18 2016 01:37 pm V:\3400_ADC\CAD\SEGMENT E4\PLAN SHEETS\STRUCTURES\R0697\CBRR0697-BRG-ABT-001.dwg By: lisa.thompson

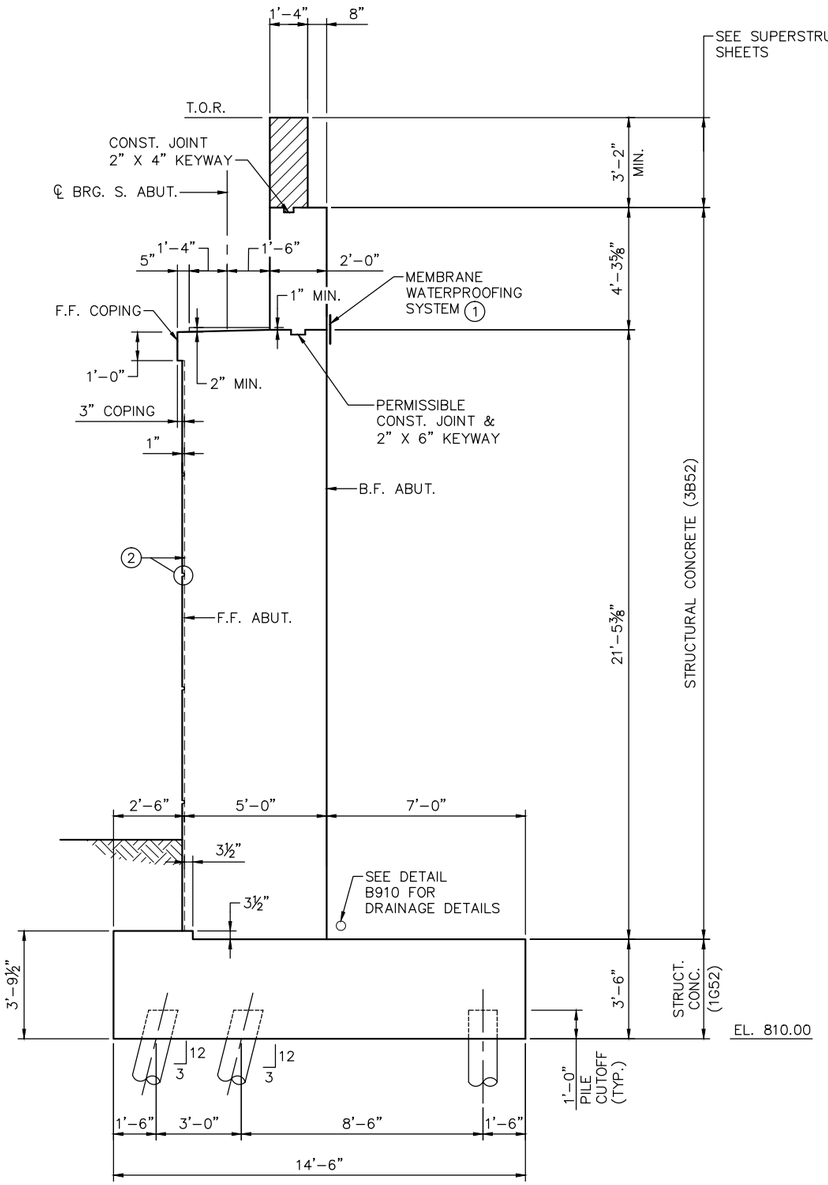

SECTION A–A

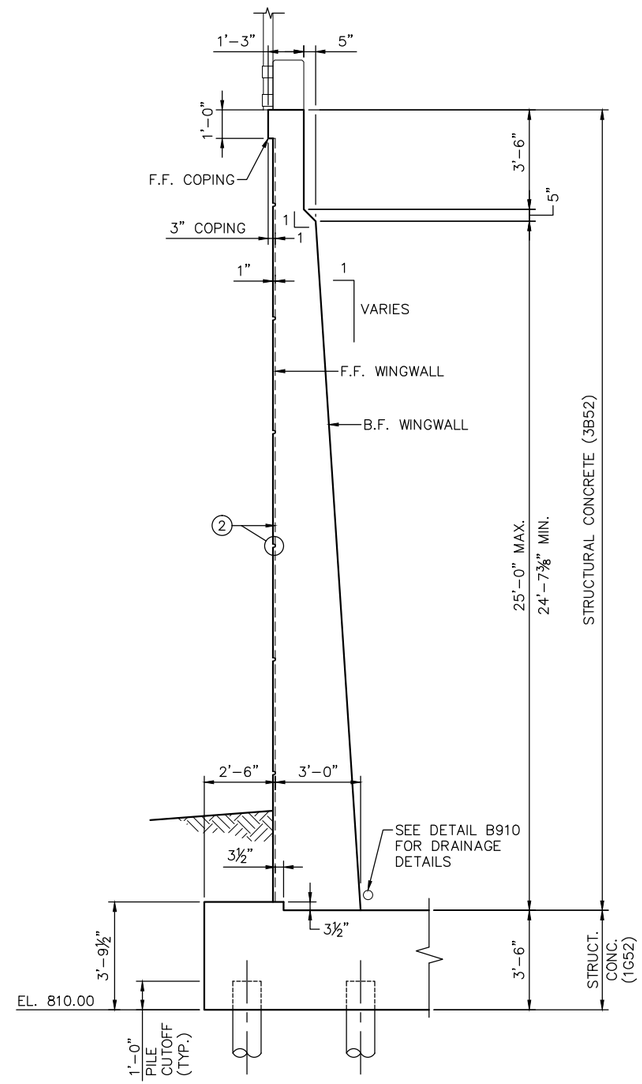

SECTION B–B

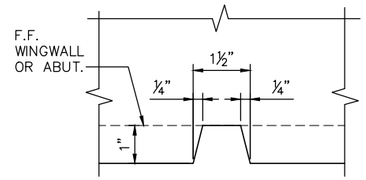

REVEAL DETAIL

NOTES:

PAVING BLOCK HATCHED AREA INDICATES THAT PORTION TO BE PLACED WITH THE INFILL SLAB CONCRETE.

SEE SHEET 12 FOR LOCATION OF SECTION A–A.

SEE SHEET 13 FOR LOCATION OF SECTION B–B.

(1) MEMBRANE WATERPROOFING SYSTEM PER MnDOT SPEC. 2481.3.B.

(2) SEE REVEAL DETAIL THIS SHEET.

NO.	DATE	BY	CHECK	DESIGN	REVISION / SUBMITTAL

DESIGNED BY: KAE | CHECKED BY: BLF
DRAWN BY: LMT | CHECKED BY: EJT

AECOM Kimley»Horn

90% SUBMISSION - 01/22/16

METROPOLITAN COUNCIL

SOUTHWEST Green Line LRT Extension

CIVIL - VOLUME 4G
LRT OVER BNSF
BRIDGE R0697
SOUTH ABUTMENT DETAILS 4

DISCIPLINE: STRUCTURES

SHEET NAME: CBRR0697-BRG-ABT-001-4

SHEET 14 OF 118

Jan, 18 2016 01:37 pm V:\3400_ADC\CAD\SEGMENT E4\PLAN SHEETS\STRUCTURES\R0697\CBRR0697-BRG-ABT-001.dwg By: lisa.thompson

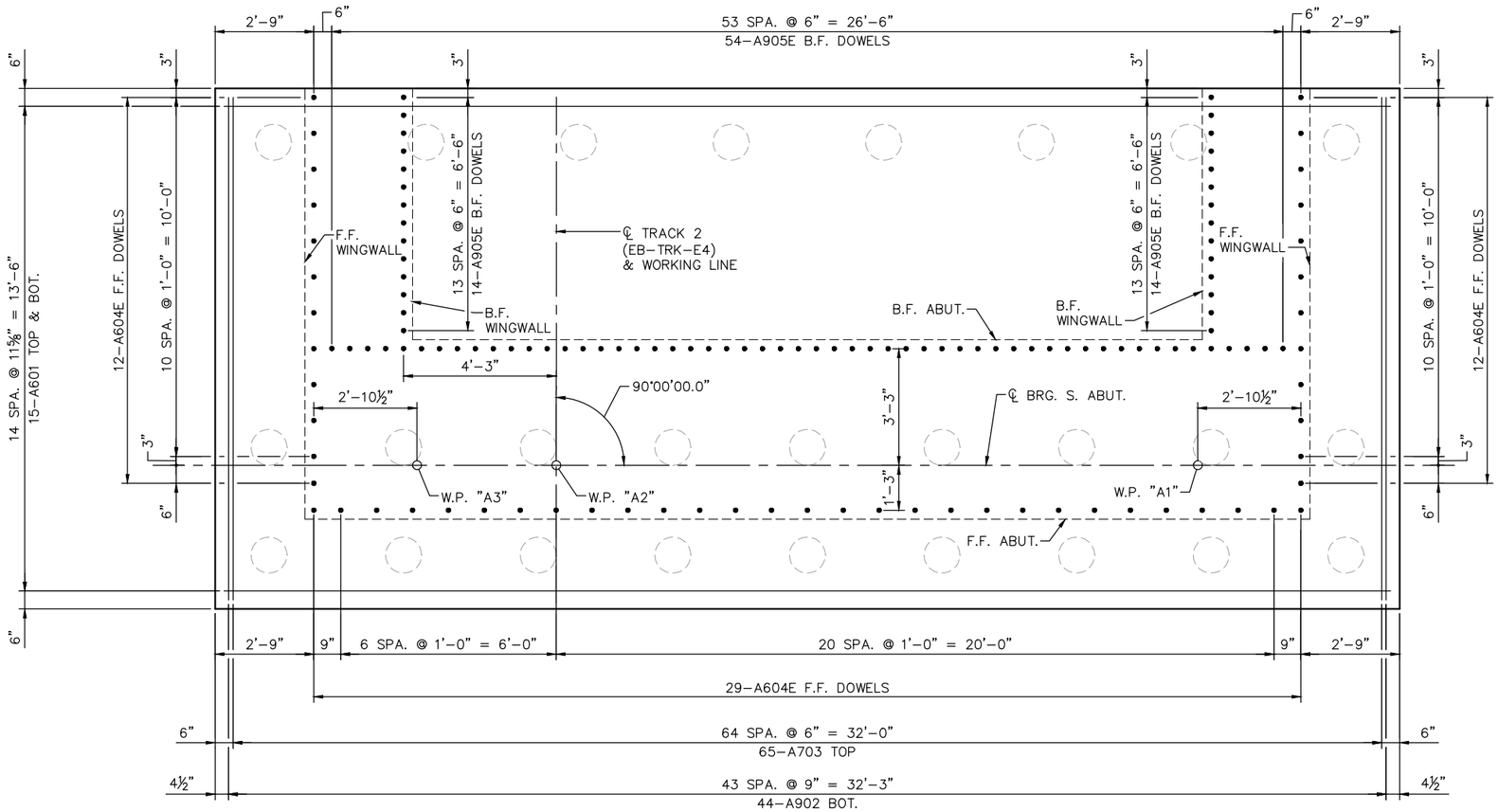

EAST

WEST

FOOTING PLAN

NOTES:

F.F. DENOTES FRONT FACE
B.F. DENOTES BACK FACE
E.F. DENOTES EACH FACE

NO.	DATE	BY	CHECK	DESIGN	REVISION / SUBMITTAL

DESIGNED BY: KAE | CHECKED BY: BLF
DRAWN BY: LMT | CHECKED BY: EJT

AECOM Kimley»Horn

90% SUBMISSION - 01/22/16

METROPOLITAN COUNCIL

SOUTHWEST Green Line LRT Extension

CIVIL - VOLUME 4G
LRT OVER BNSF
BRIDGE R0697
SOUTH ABUTMENT REINFORCEMENT 1

DISCIPLINE: STRUCTURES
SHEET NAME: CBRR0697-BRG-ABT-001-5

SHEET 15 OF 118

Jan, 18 2016 01:37 pm v:\3400_ADC\CAD\SEGMENT E4\PLAN SHEETS\STRUCTURES\R0697\CBRR0697-BRG-ABT-001.dwg By: lisa.thompson

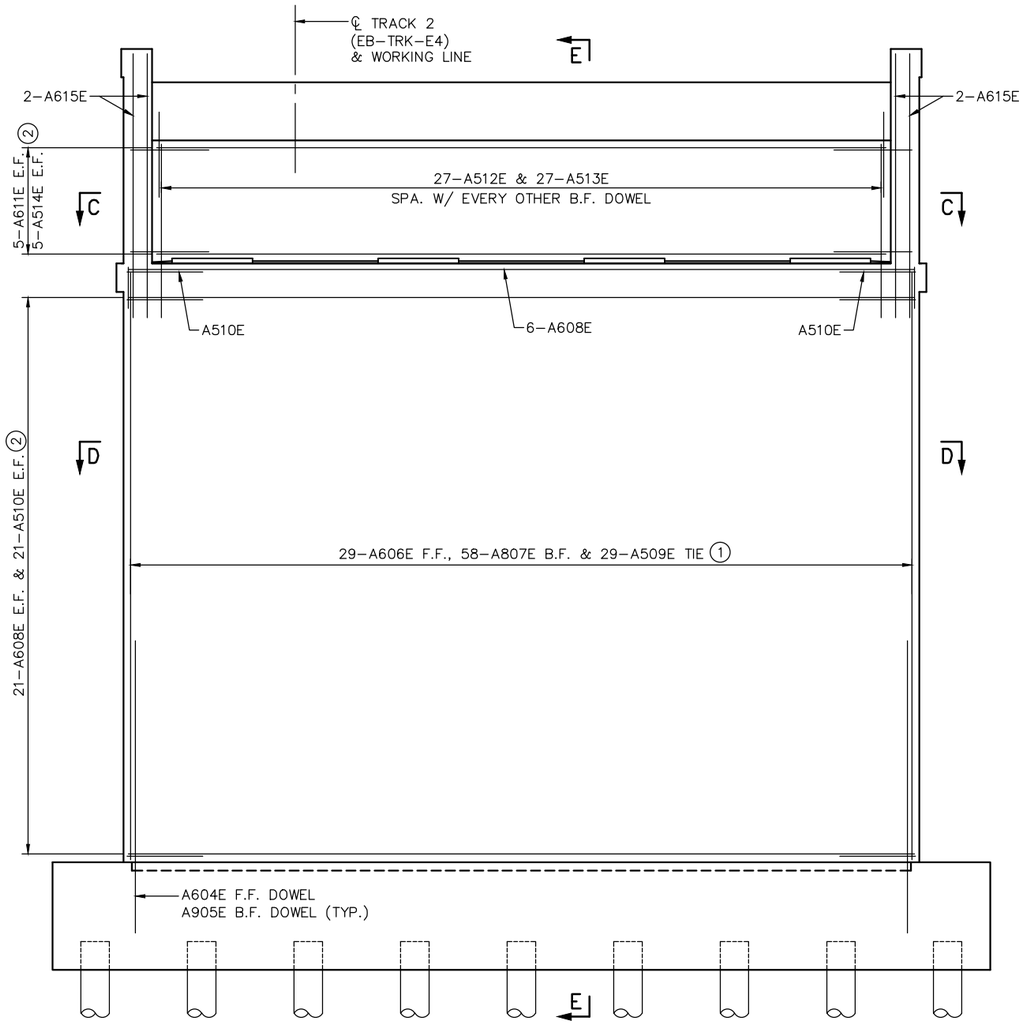

EAST WEST

ELEVATION

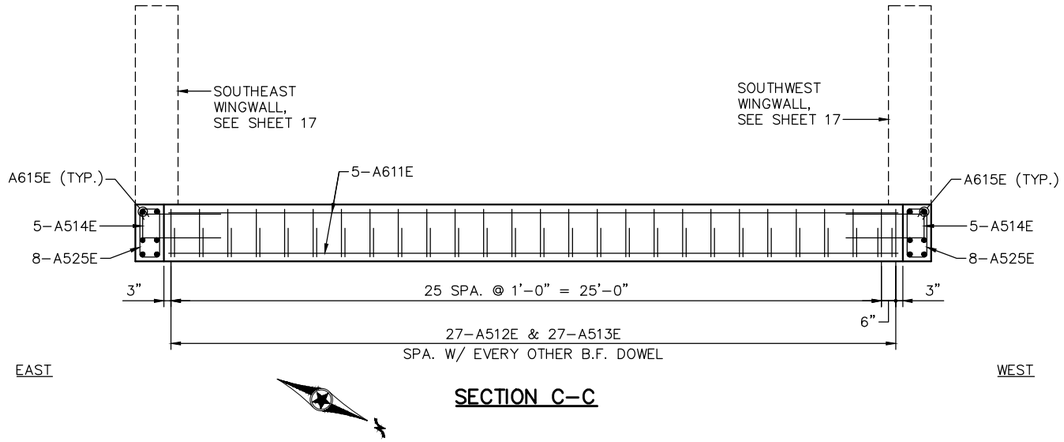

EAST WEST

SECTION C–C

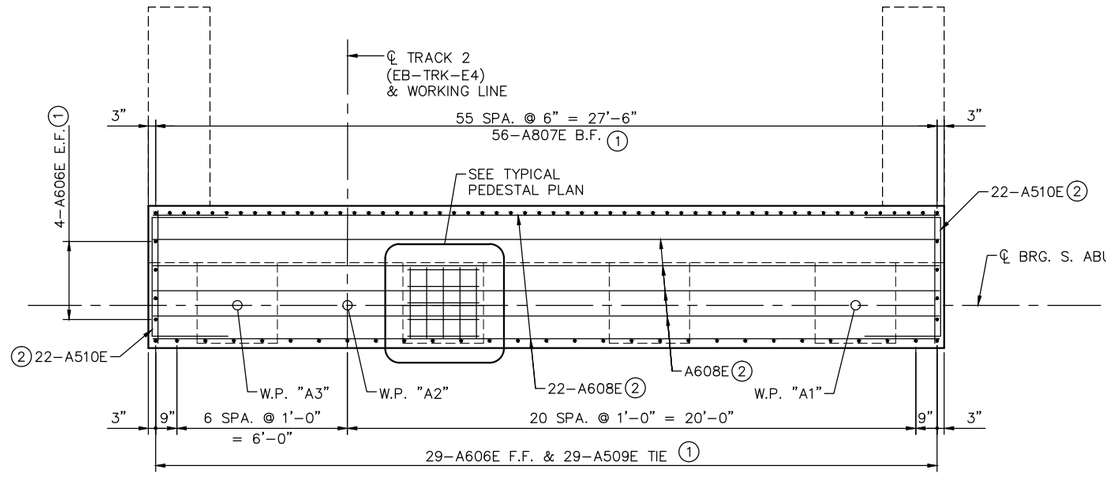

EAST WEST

SECTION D–D

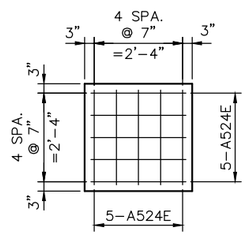

TYPICAL PEDESTAL PLAN

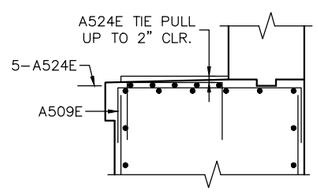

TYPICAL PEDESTAL SECTION

NOTES:

F.F. DENOTES FRONT FACE
B.F. DENOTES BACK FACE
E.F. DENOTES EACH FACE

SEE SHEET 18 FOR SECTION E–E.

1 SPACED WITH FOOTING DOWELS.

2 SPACED WITH HORIZONTAL REINFORCEMENT.

NO.	DATE	BY	CHECK	DESIGN	REVISION / SUBMITTAL

DESIGNED BY: KAE CHECKED BY: BLF
DRAWN BY: LMT CHECKED BY: EJT

AECOM Kimley»Horn

90% SUBMISSION - 01/22/16

METROPOLITAN COUNCIL

SOUTHWEST Green Line LRT Extension

CIVIL - VOLUME 4G
LRT OVER BNSF
BRIDGE R0697
SOUTH ABUTMENT REINFORCEMENT 2

DISCIPLINE: STRUCTURES

SHEET NAME: CBRR0697-BRG-ABT-001-6

SHEET 16 OF 118

Jan, 18 2016 01:37 pm V:\3400_ADC\CAD\SEGMENT E4\PLAN SHEETS\STRUCTURES\R0697\CBRR0697-BRG-ABT-001.dwg By: lisa.thompson

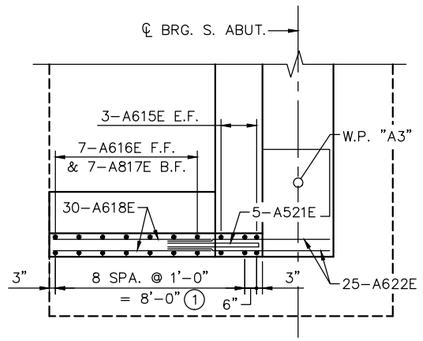

SOUTHEAST WINGWALL PLAN

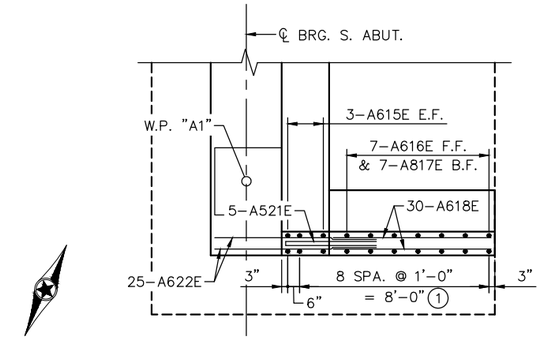

SOUTHWEST WINGWALL PLAN

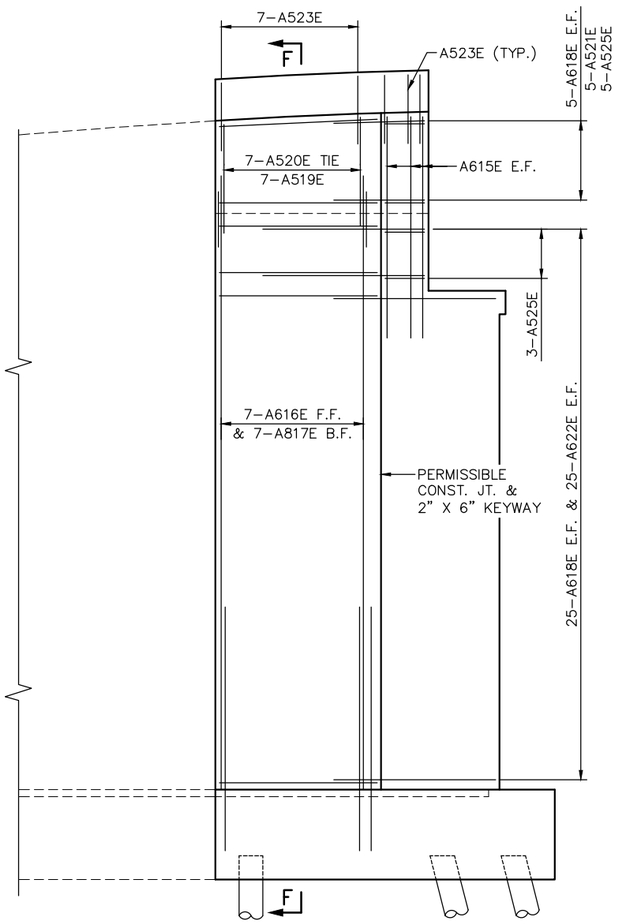

SOUTHEAST WINGWALL ELEVATION

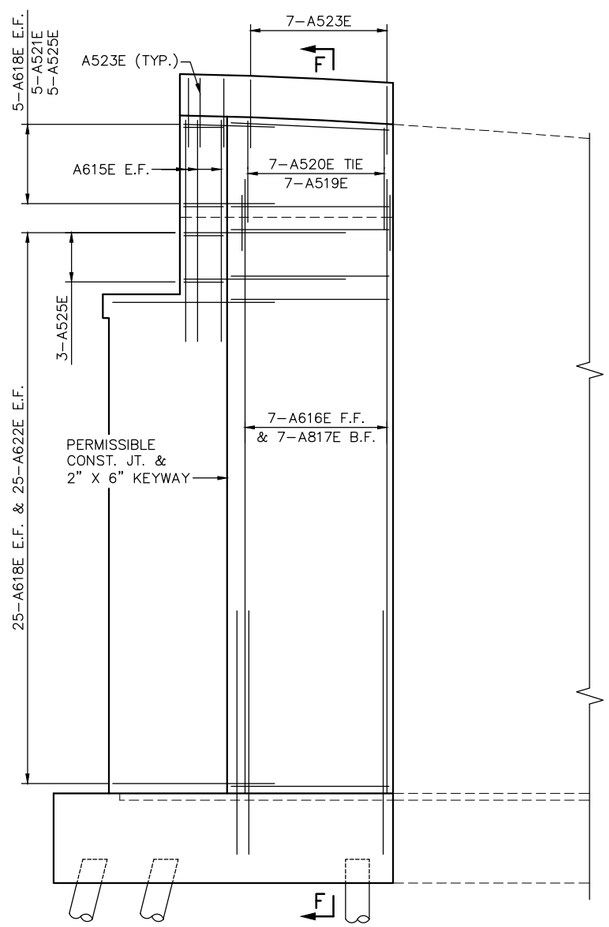

SOUTHWEST WINGWALL ELEVATION

NOTES:

F.F. DENOTES FRONT FACE
B.F. DENOTES BACK FACE
E.F. DENOTES EACH FACE

SEE SHEET 18 FOR SECTION F–F.

(1) SPACED WITH FOOTING DOWELS.

NO.	DATE	BY	CHECK	DESIGN	REVISION / SUBMITTAL

DESIGNED BY: KAE | CHECKED BY: BLF
DRAWN BY: LMT | CHECKED BY: EJT

AECOM Kimley»Horn

90% SUBMISSION - 01/22/16

METROPOLITAN COUNCIL

SOUTHWEST Green Line LRT Extension

CIVIL - VOLUME 4G
LRT OVER BNSF
BRIDGE R0697
SOUTH ABUTMENT REINFORCEMENT 3

DISCIPLINE: STRUCTURES
SHEET NAME: CBRR0697-BRG-ABT-001-7

SHEET 17 OF 118

Jan, 18 2016 01:37 pm V:\3400_ADC\CAD\SEGMENT E4\PLAN SHEETS\STRUCTURES\R0697\CBRR0697-BRG-ABT-001.dwg By: lisa.thompson

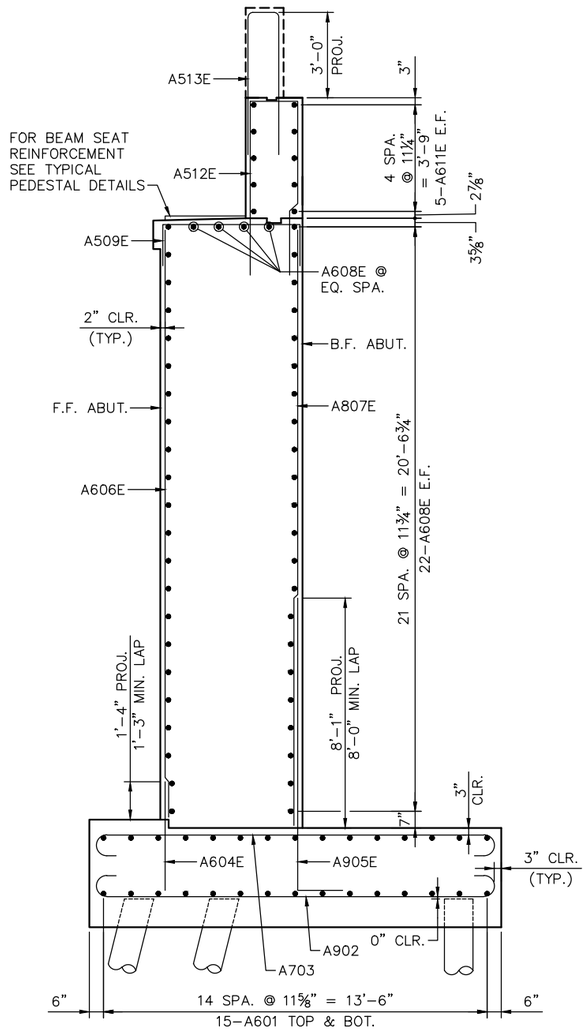

SECTION E-E

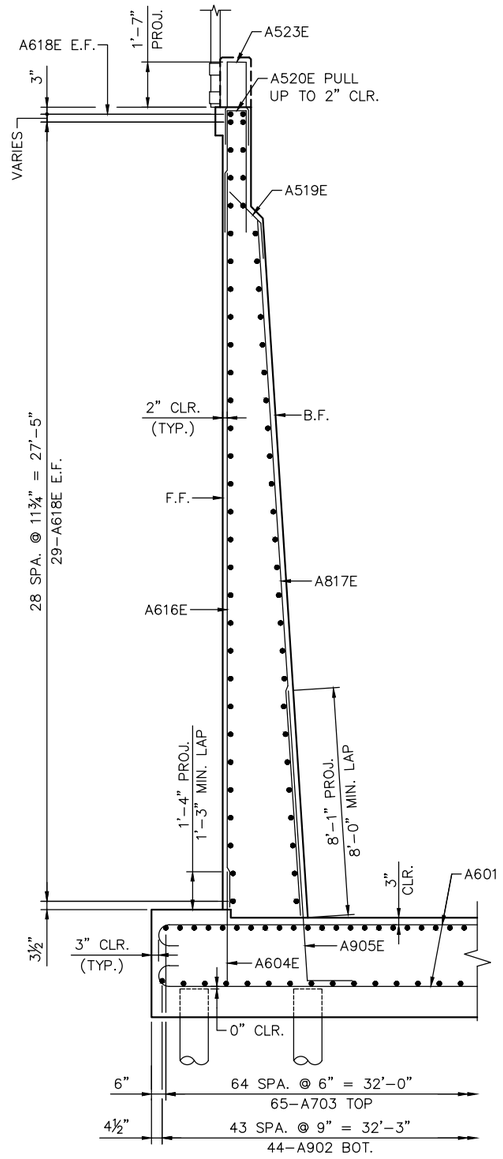

SECTION F-F

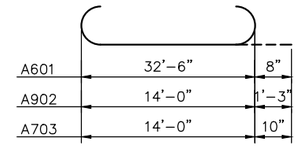

A601, A902, & A703

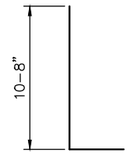

A905E

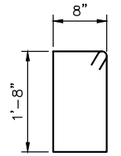

A525E

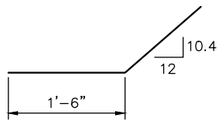

A519E

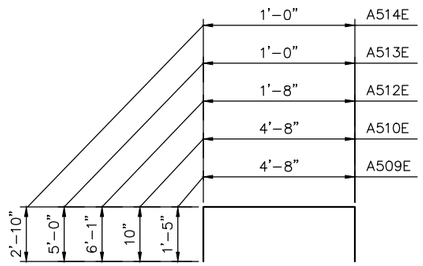

A509E, A510E, A512E, A513E, & A514E

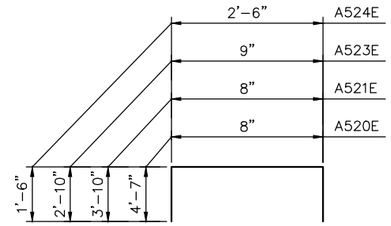

A520E, A521E, A523E, & A524E

NOTES:

F.F. DENOTES FRONT FACE
B.F. DENOTES BACK FACE
E.F. DENOTES EACH FACE

SEE SHEET 16 FOR LOCATION OF SECTION E-E.

SEE SHEET 17 FOR LOCATION OF SECTION F-F.

BILL OF REINFORCEMENT FOR SOUTH ABUTMENT

BAR	NO.	LENGTH	SHAPE	LOCATION
A601	30	33'-10"	BENT	FOOTING, LONG. TOP & BOT.
A902	44	16'-6"	BENT	FOOTING, TRANS. BOT.
A703	65	15'-8"	BENT	FOOTING, TRANS. TOP
A604E	53	4'-3"	STR.	FOOTING, DOWEL F.F.
A905E	82	12'-3"	BENT	FOOTING, DOWEL B.F.
A606E	37	20'-11"	STR.	STEM, VERT. F.F.
A807E	56	20'-11"	STR.	STEM, VERT. B.F.
A608E	48	27'-8"	STR.	STEM, LONG.
A509E	29	7'-6"	BENT	STEM, TIE
A510E	44	6'-4"	BENT	STEM, TIE
A611E	10	25'-8"	STR.	BACKWALL, HORZ. E.F.
A512E	27	13'-10"	BENT	BACKWALL, TIE
A513E	27	11'-0"	BENT	BACKWALL, TIE
A514E	10	6'-8"	BENT	WINGWALL, TIE
A615E	12	9'-4"	STR.	WINGWALL, VERT.
A616E	14	25'-11"	STR.	WINGWALL, VERT. F.F.
A817E	14	24'-6"	STR.	WINGWALL, VERT. B.F.
A618E	120	6'-8"	STR.	WINGWALL, HORZ. E.F.
A519E	14	2'-9"	BENT	WINGWALL, VERT.
A520E	14	9'-10"	BENT	WINGWALL, VERT. TIE
A521E	10	8'-4"	BENT	WINGWALL, HORZ. TIE
A622E	100	6'-10"	STR.	WINGWALL, HORZ. E.F.
A523E	20	6'-5"	BENT	CURB, VERT. TIE
A524E	40	5'-6"	BENT	PEDESTAL, TIE
A525E	16	5'-4"	BENT	WINGWALL, STIRRUP

NO.	DATE	BY	CHECK	DESIGN	REVISION / SUBMITTAL

DESIGNED BY: KAE | CHECKED BY: BLF
DRAWN BY: LMT | CHECKED BY: EJT

AECOM Kimley»Horn

90% SUBMISSION - 01/22/16

METROPOLITAN COUNCIL

SOUTHWEST Green Line LRT Extension

CIVIL - VOLUME 4G
LRT OVER BNSF
BRIDGE R0697
SOUTH ABUTMENT REINFORCEMENT 4

DISCIPLINE: STRUCTURES
SHEET NAME: CBRR0697-BRG-ABT-001-8

SHEET 18 OF 118

Jan, 18 2016 01:37 pm V:\3400_ADC\CAD\SEGMENT E4\PLAN SHEETS\STRUCTURES\R0697\CBRR0697-BRG-ABT-001.dwg By: lisa.thompson

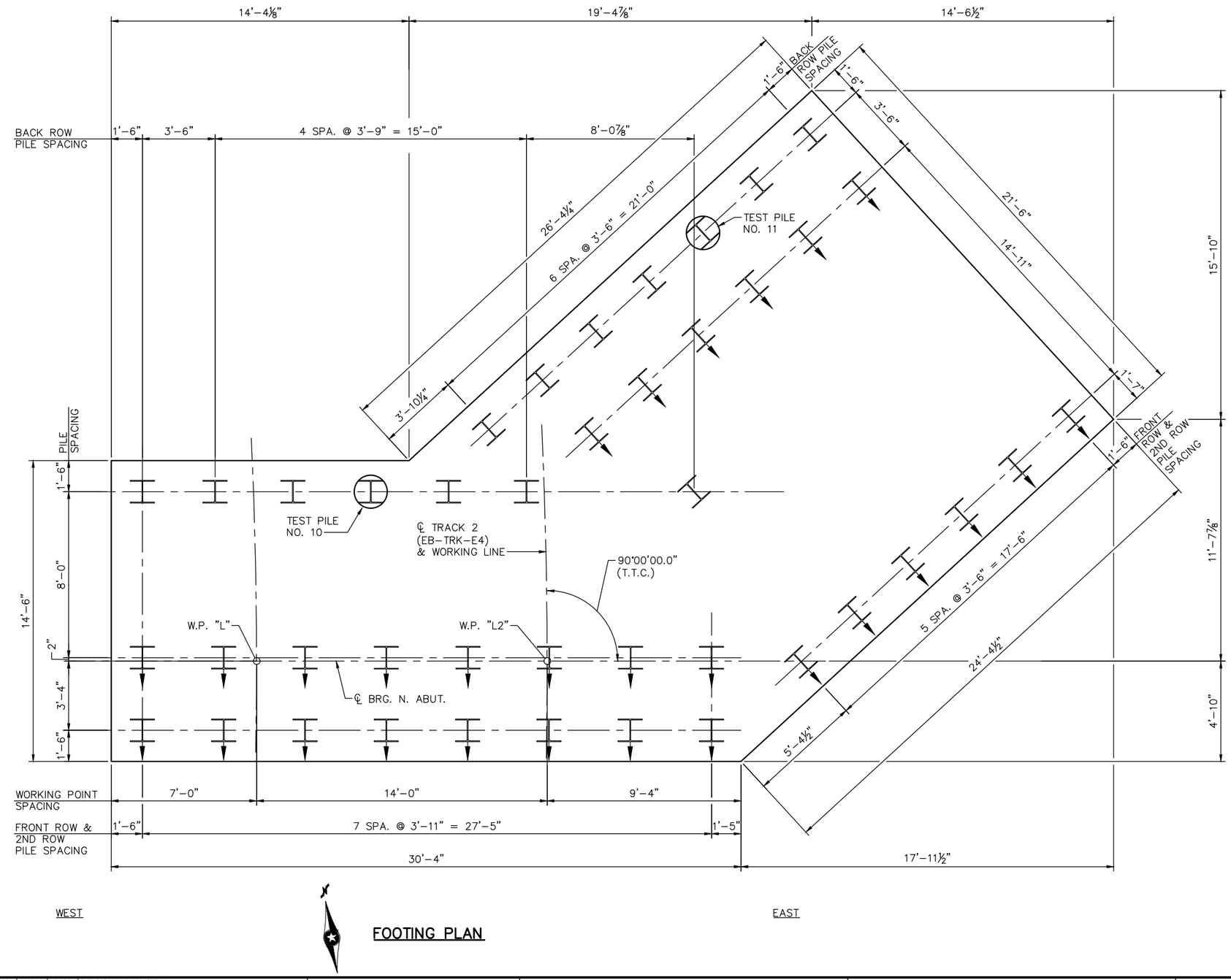

FOOTING PLAN

NORTH ABUTMENT COMPUTED PILE LOAD - TONS/PILE	
FACTORED DEAD LOAD	97.4
FACTORED LIVE LOAD	45.7
* FACTORED DESIGN LOAD	143.1

* BASED ON STRENGTH V LOAD COMBINATION.

NORTH ABUTMENT REQUIRED NOMINAL PILE BEARING RESISTANCE FOR H-PILES Rn - TONS/PILE		
FIELD CONTROL METHOD	φdyn	* Rn
MN/DOT PILE FORMULA 2012 (MPF12) $R_n = 20\sqrt{\frac{W \times H}{1000}} \times log\left(\frac{10}{S}\right)$	0.60	239

* Rn = (FACTORED DESIGN LOAD) / φdyn

GENERAL PILE NOTES

1 STEEL HP14x73 TEST PILES 65 FT. LONG
22 STEEL HP14x73 PILES EST. LENGTH 65 FT.
23 STEEL HP14x73 PILES REQ'D FOR NORTH ABUTMENT

NORTHEAST WINGWALL COMPUTED PILE LOAD - TONS/PILE	
FACTORED DEAD LOAD	149.4
FACTORED LIVE LOAD	24.4
* FACTORED DESIGN LOAD	173.8

* BASED ON STRENGTH I LOAD COMBINATION.

NORTHEAST WINGWALL REQUIRED NOMINAL PILE BEARING RESISTANCE FOR H-PILES Rn - TONS/PILE		
FIELD CONTROL METHOD	φdyn	* Rn
MN/DOT PILE FORMULA 2012 (MPF12) $R_n = 20\sqrt{\frac{W \times H}{1000}} \times log\left(\frac{10}{S}\right)$	0.60	290

* Rn = (FACTORED DESIGN LOAD) / φdyn

GENERAL PILE NOTES

1 STEEL HP14x73 TEST PILES 65 FT. LONG
18 STEEL HP14x73 PILES EST. LENGTH 65 FT.
19 STEEL HP14x73 PILES REQ'D FOR NORTHEAST WINGWALL

NOTES:

PILES TO BE HP14x73 WITH PILE TIP PROTECTION.

PILE SPACING SHOWN IS AT BOTTOM OF FOOTING.

PILES MARKED THUS ⊢⊣ TO BE BATTERED 3" PER FOOT IN DIRECTION SHOWN.

FOR PILE SPLICE DETAILS SEE DETAIL B202.

PILES MUST EXTEND A MINIMUM OF 62 FEET FOR UPLIFT RESISTANCE.

NO.	DATE	BY	CHECK	DESIGN	REVISION / SUBMITTAL

DESIGNED BY: BAW CHECKED BY: EJT
DRAWN BY: LMT CHECKED BY: EJT

AECOM Kimley»Horn

90% SUBMISSION - 01/22/16

METROPOLITAN COUNCIL

SOUTHWEST Green Line LRT Extension

CIVIL - VOLUME 4G
LRT OVER BNSF
BRIDGE R0697
NORTH ABUTMENT DETAILS 1

DISCIPLINE: STRUCTURES
SHEET NAME: CBRR0697-BRG-ABT-002-1

SHEET 19 OF 118

Jan, 18 2016 01:38 pm V:\3400_ADC\CAD\SEGMENT E4\PLAN SHEETS\STRUCTURES\R0697\CBRR0697-BRG-ABT-002.dwg By: lisa.thompson

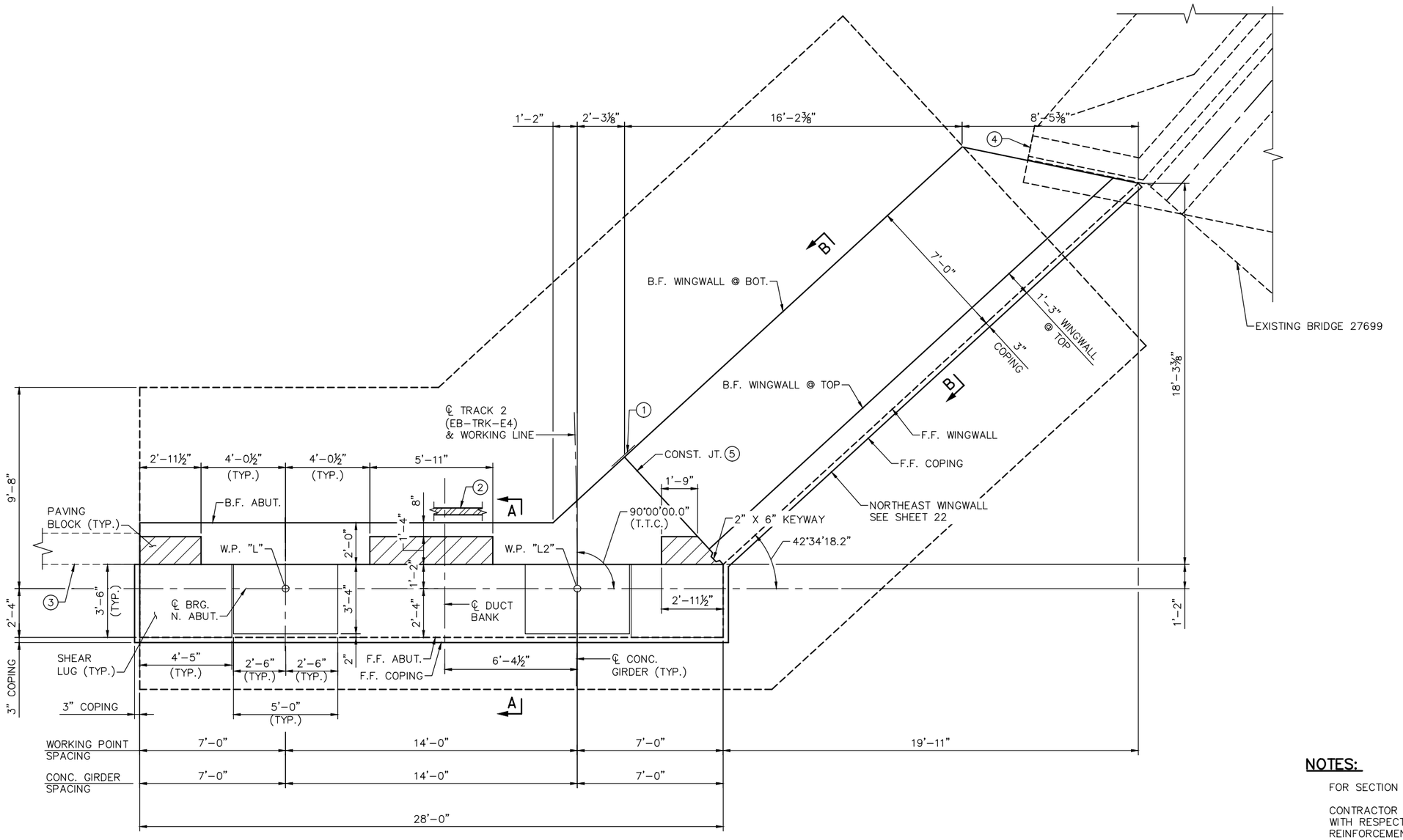

PLAN

NOTES:

FOR SECTION A–A & B–B, SEE SHEET 23.

CONTRACTOR TO FIELD VERIFY NORTHEAST WINGWALL DIMENSIONS WITH RESPECT TO EXISTING BRIDGE 27699 AND MODIFY REINFORCEMENT AND DIMENSIONS AS NECESSARY.

(1) MEMBRANE WATERPROOFING SYSTEM PER MnDOT 2481.3.B.

(2) PERFORATED PIPE, SEE DETAIL B910 FOR DRAINAGE DETAILS.

(3) RETAINING WALL RTW–E412, SEE RETAINING WALL PLANS.

(4) SEE SHEET FOR EXISTING BRIDGE 27699 WINGWALL REMOVAL DETAILS.

(5) A MINIMUM OF 72 HOURS MUST BE PROVIDED BETWEEN ADJACENT POURS.

NO.	DATE	BY	CHECK	DESIGN	REVISION / SUBMITTAL

DESIGNED BY: BAW | CHECKED BY: EJT
DRAWN BY: LMT | CHECKED BY: EJT

AECOM Kimley»Horn

90% SUBMISSION - 01/22/16

METROPOLITAN COUNCIL

SOUTHWEST Green Line LRT Extension

CIVIL - VOLUME 4G
LRT OVER BNSF
BRIDGE R0697
NORTH ABUTMENT DETAILS 2

DISCIPLINE: STRUCTURES

SHEET NAME: CBRR0697-BRG-ABT-002-2

SHEET 20 OF 118

Jan, 18 2016 01:38 pm V:\3400_ADC\CAD\SEGMENT E4\PLAN SHEETS\STRUCTURES\R0697\CBRR0697-BRG-ABT-002.dwg By: lisa.thompson

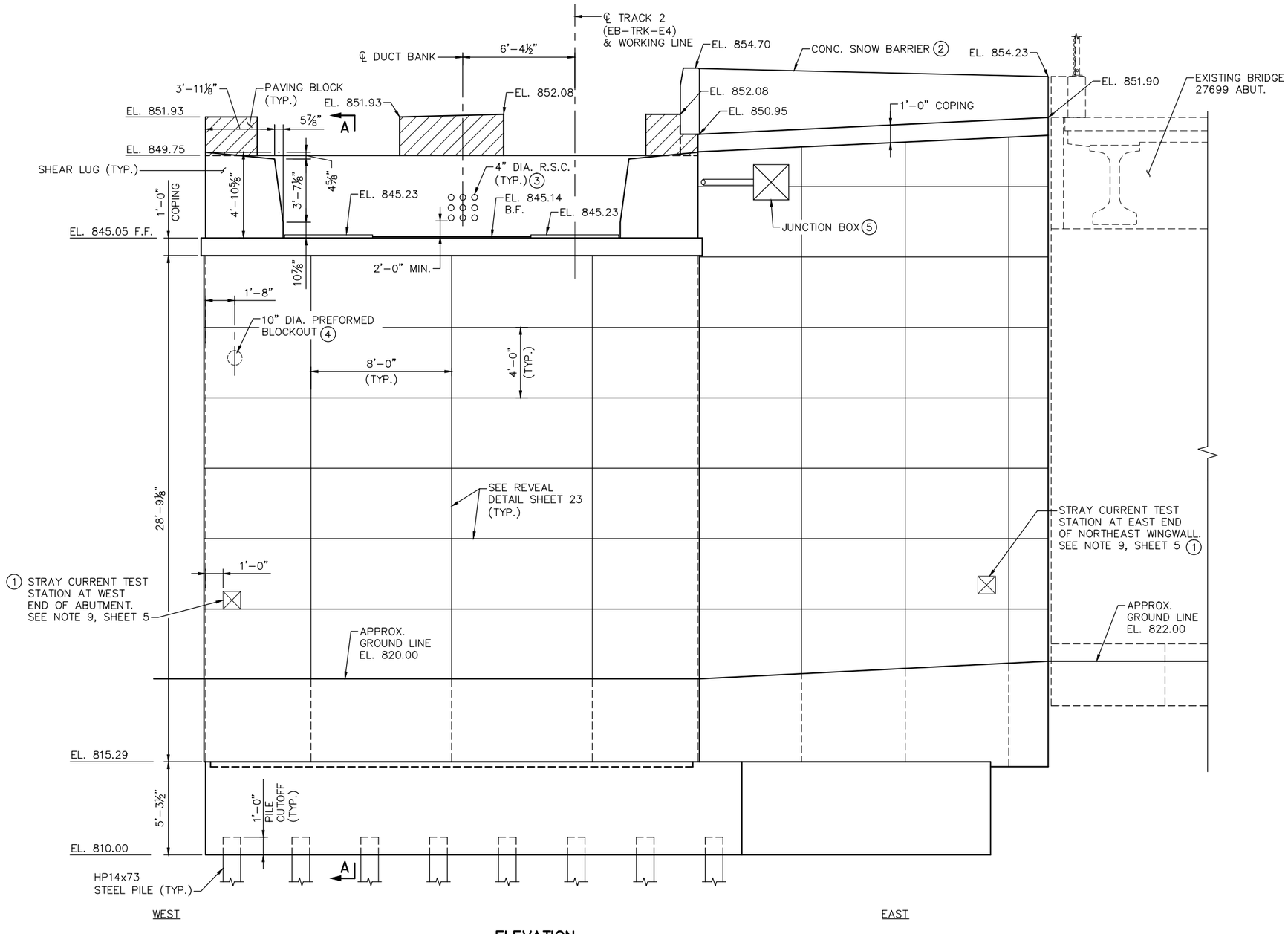

ELEVATION

NOTES:

FOR SECTION A–A, SEE SHEET 23.

PAVING BLOCK HATCHED AREA INDICATES THAT PORTION TO BE PLACED WITH THE INFILL SLAB CONCRETE.

(1) INSTALL STRAY CURRENT JUNCTION BOX. SEE DRAWINGS E0–SYS–CORR–DTL–003 TO 013 FOR DETAILS. CABLES WILL BE ROUTED TO JUNCTION BOXES BY CONTRACTOR. AFTER CONDUITS ARE INSTALLED, REMAINING BLOCKOUT SPACE TO BE FILLED AND SEALED WITH NON–SHRINK GROUT (TYP. FOR ALL BLOCKOUTS).

(2) SEE SHEET 88 FOR SNOW BARRIER DETAILS.

(3) SEE SHEETS 90–93 OR FOR SYSTEM WIDE ELECTRICAL CONDUIT SYSTEM DETAILS.

(4) SEE SHEETS 94–96 FOR DRAINAGE DETAILS.

(5) MOUNT JUNCTION BOX TO FACE OF NE WINGWALL ACCORDING TO MANUFACTURER'S RECOMMENDATIONS. SEE SYSTEMWIDE ELECTRICAL PLANS.

NO.	DATE	BY	CHECK	DESIGN	REVISION / SUBMITTAL

DESIGNED BY: BAW | CHECKED BY: EJT
DRAWN BY: LMT | CHECKED BY: EJT

AECOM Kimley»Horn

90% SUBMISSION - 01/22/16

METROPOLITAN COUNCIL

SOUTHWEST Green Line LRT Extension

CIVIL - VOLUME 4G
LRT OVER BNSF
BRIDGE R0697
NORTH ABUTMENT DETAILS 3

DISCIPLINE: STRUCTURES

SHEET NAME: CBRR0697-BRG-ABT-002-3

SHEET 21 OF 118

Jan, 18 2016 01:38 pm V:\3400_ADC\CAD\SEGMENT E4\PLAN SHEETS\STRUCTURES\R0697\CBRR0697-BRG-ABT-002.dwg By: lisa.thompson

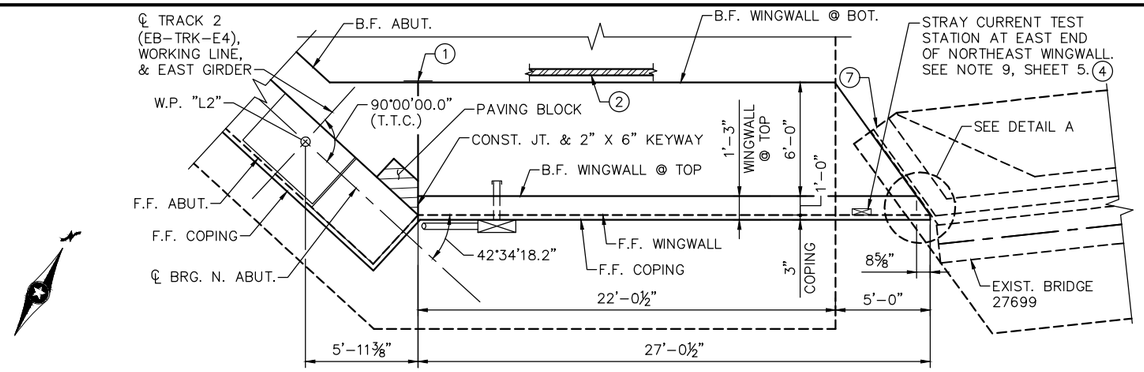

NORTHEAST WINGWALL PLAN

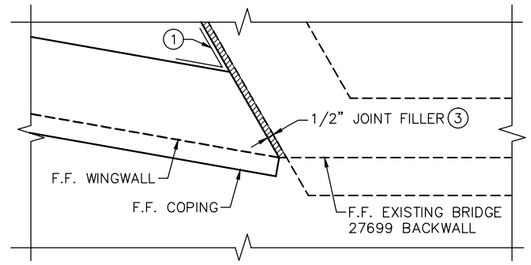

DETAIL A

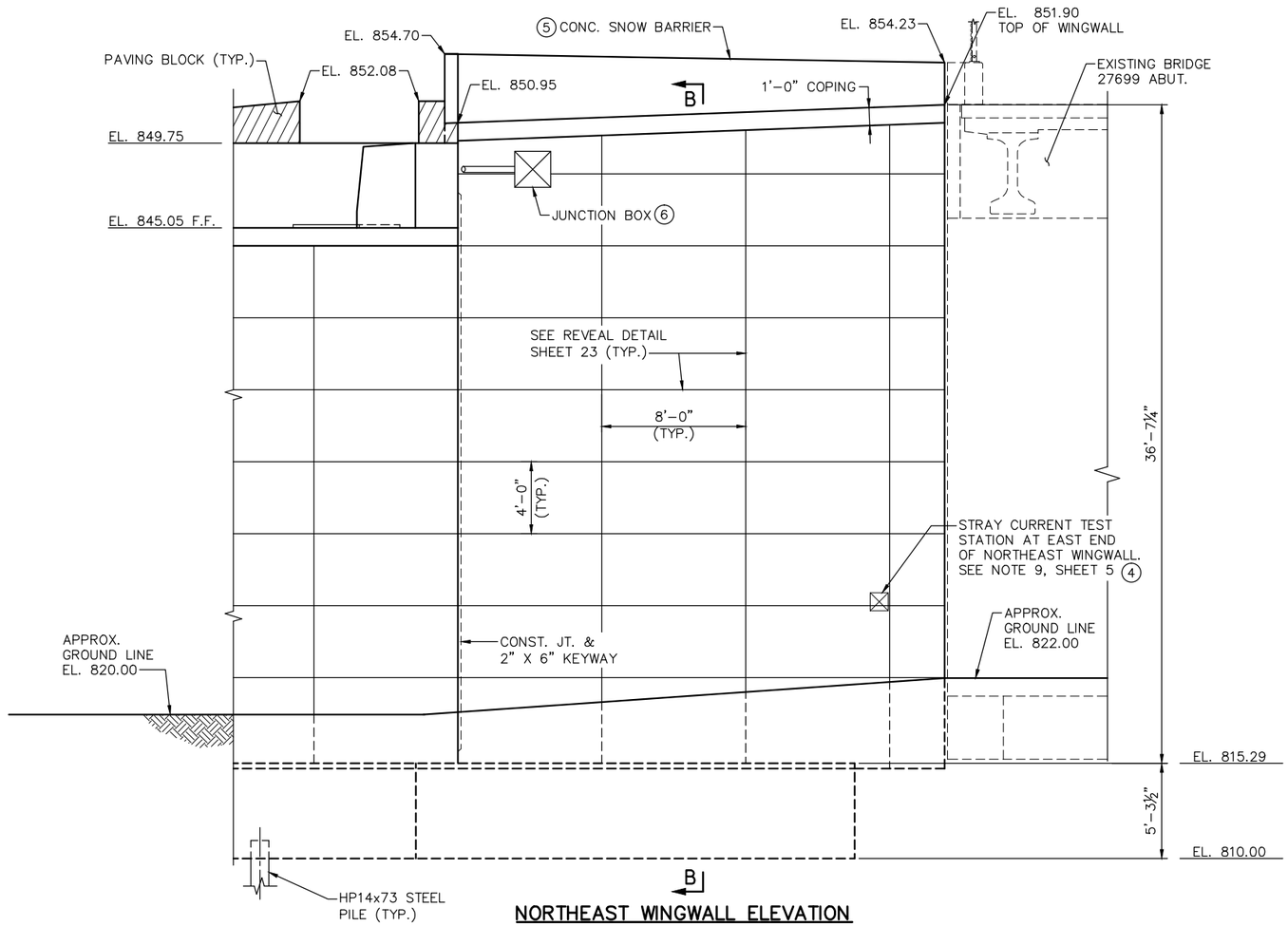

NORTHEAST WINGWALL ELEVATION

NOTES:

PAVING BLOCK HATCHED AREA INDICATES THAT PORTION TO BE PLACED WITH THE INFILL SLAB CONCRETE.

ARCHITECTURAL CONCRETE TEXTURE SHALL BE CONTINUOUS FROM EXISTING BRIDGE 27699 ABUTMENT ACROSS NE WINGWALL AND NORTH ABUTMENT.

FOR SECTION B–B, SEE SHEET 23.

1. MEMBRANE WATERPROOFING SYSTEM PER MnDOT 2481.3.B.
2. PERFORATED PIPE, SEE DETAIL B910 FOR DRAINAGE DETAILS.
3. JOINT FILLER SHALL BE CORK PER MnDOT SPEC. 2401.3E3.
4. INSTALL STRAY CURRENT JUNCTION BOX. SEE DRAWINGS EO–SYS–CORR–DTL–003 TO 013 FOR DETAILS. CABLES WILL BE ROUTED TO JUNCTION BOXES BY CONTRACTOR. AFTER CONDUITS ARE INSTALLED, REMAINING BLOCKOUT SPACE TO BE FILLED AND SEALED WITH NON–SHRINK GROUT (TYP. FOR ALL BLOCKOUTS).
5. SEE SHEET 88 FOR CONCRETE SNOW BARRIER DETAILS.
6. MOUNT JUNCTION BOX TO FACE OF NE WINGWALL ACCORDING TO MANUFACTURER'S RECOMMENDATIONS. SEE SYSTEMWIDE ELECTRICAL PLANS.
7. SEE SHEET 24 FOR EXISTING BRIDGE 27699 WINGWALL REMOVAL DETAILS.

NO.	DATE	BY	CHECK	DESIGN	REVISION / SUBMITTAL

DESIGNED BY: BAW | CHECKED BY: EJT
DRAWN BY: LMT | CHECKED BY: EJT

AECOM Kimley»Horn

90% SUBMISSION - 01/22/16

METROPOLITAN COUNCIL

SOUTHWEST Green Line LRT Extension

CIVIL - VOLUME 4G
LRT OVER BNSF
BRIDGE R0697
NORTH ABUTMENT DETAILS 4

DISCIPLINE: STRUCTURES
SHEET NAME: CBRR0697-BRG-ABT-002-4

SHEET 22 OF 118

Jan, 18 2016 01:38 pm V:\3400_ADC\CAD\SEGMENT E4\PLAN SHEETS\STRUCTURES\R0697\CBRR0697-BRG-ABT-002.dwg By: lisa.thompson

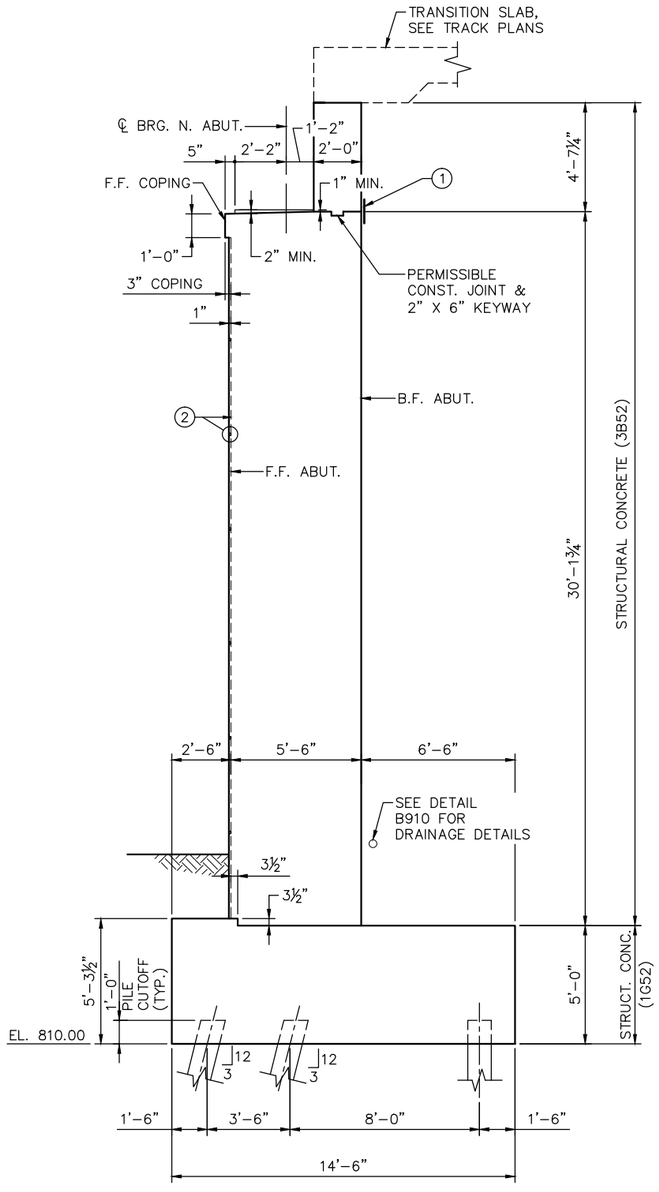

SECTION A–A

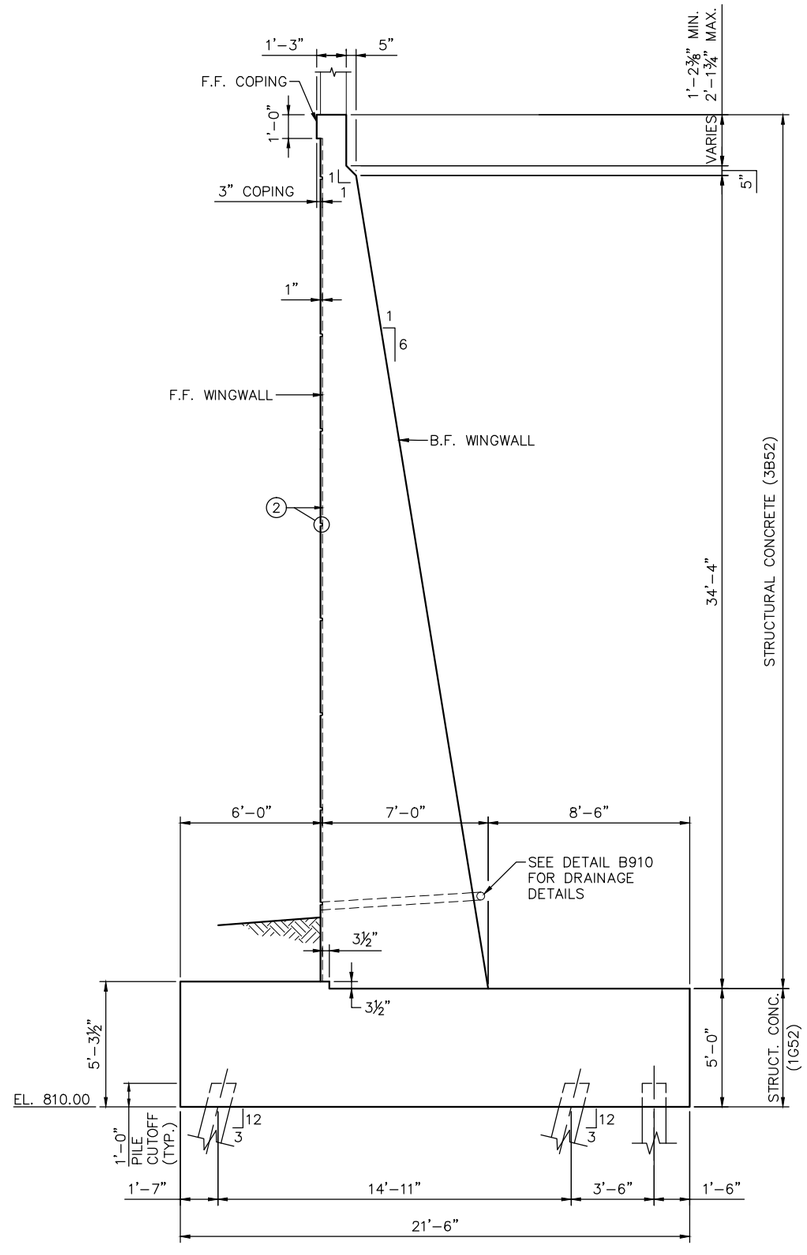

SECTION B–B

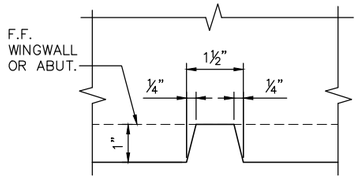

REVEAL DETAIL

NOTES:

SEE SHEETS 20–22 FOR LOCATION OF SECTION A–A & B–B.

(1) MEMBRANE WATERPROOFING SYSTEM PER MnDOT SPEC. 2481.3.B.

(2) SEE REVEAL DETAIL THIS SHEET.

NO.	DATE	BY	CHECK	DESIGN	REVISION / SUBMITTAL

DESIGNED BY: BAW | CHECKED BY: EJT
DRAWN BY: LMT | CHECKED BY: EJT

AECOM Kimley»Horn

90% SUBMISSION - 01/22/16

METROPOLITAN COUNCIL

SOUTHWEST Green Line LRT Extension

CIVIL - VOLUME 4G
LRT OVER BNSF
BRIDGE R0697
NORTH ABUTMENT DETAILS 5

DISCIPLINE: STRUCTURES
SHEET NAME: CBRR0697-BRG-ABT-002-5

SHEET 23 OF 118

Jan, 18 2016 01:38 pm V:\3400_ADC\CAD\SEGMENT E4\PLAN SHEETS\STRUCTURES\R0697\CBRR0697-BRG-ABT-002.dwg By: lisa.thompson

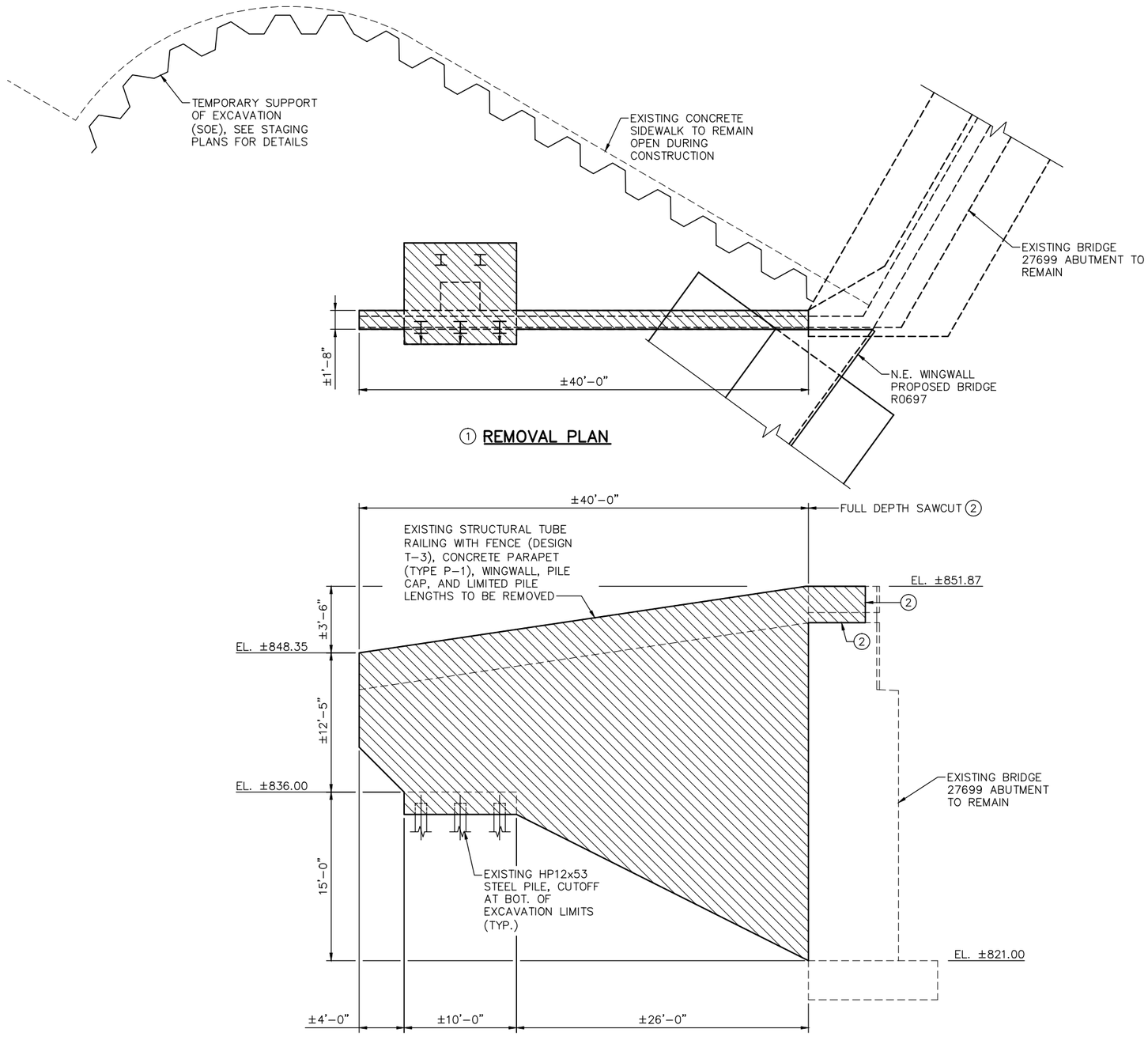

① REMOVAL PLAN

① REMOVAL ELEVATION

NOTES:

CONTRACTOR TO FIELD VERIFY REMOVAL LIMITS.

COORDINATE MODIFICATIONS TO NE WINGWALL WITH ENGINEER PRIOR TO BEGINNING CONSTRUCTION.

① EXISTING BRIDGE 27699 REMOVAL DETAILS

② CONTRACTOR TO GRIND SAWED CONCRETE SURFACE SMOOTH, AND SHALL APPLY CORROSION INHIBITOR TO ALL EXPOSED REINFORCEMENT ENDS.

LEGEND

REMOVAL LIMITS

NO.	DATE	BY	CHECK	DESIGN	REVISION / SUBMITTAL

DESIGNED BY: BAW | CHECKED BY: EJT
DRAWN BY: LMT | CHECKED BY: EJT

AECOM Kimley»Horn

90% SUBMISSION - 01/22/16

METROPOLITAN COUNCIL

SOUTHWEST Green Line LRT Extension

CIVIL - VOLUME 4G
LRT OVER BNSF
BRIDGE R0697
NORTH ABUTMENT DETAILS 6

DISCIPLINE: STRUCTURES

SHEET NAME: CBRR0697-BRG-ABT-002-6

SHEET 24 OF 118

Jan, 18 2016 01:38 pm V:\3400_ADC\CAD\SEGMENT E4\PLAN SHEETS\STRUCTURES\R0697\CBRR0697-BRG-ABT-002.dwg By: lisa.thompson

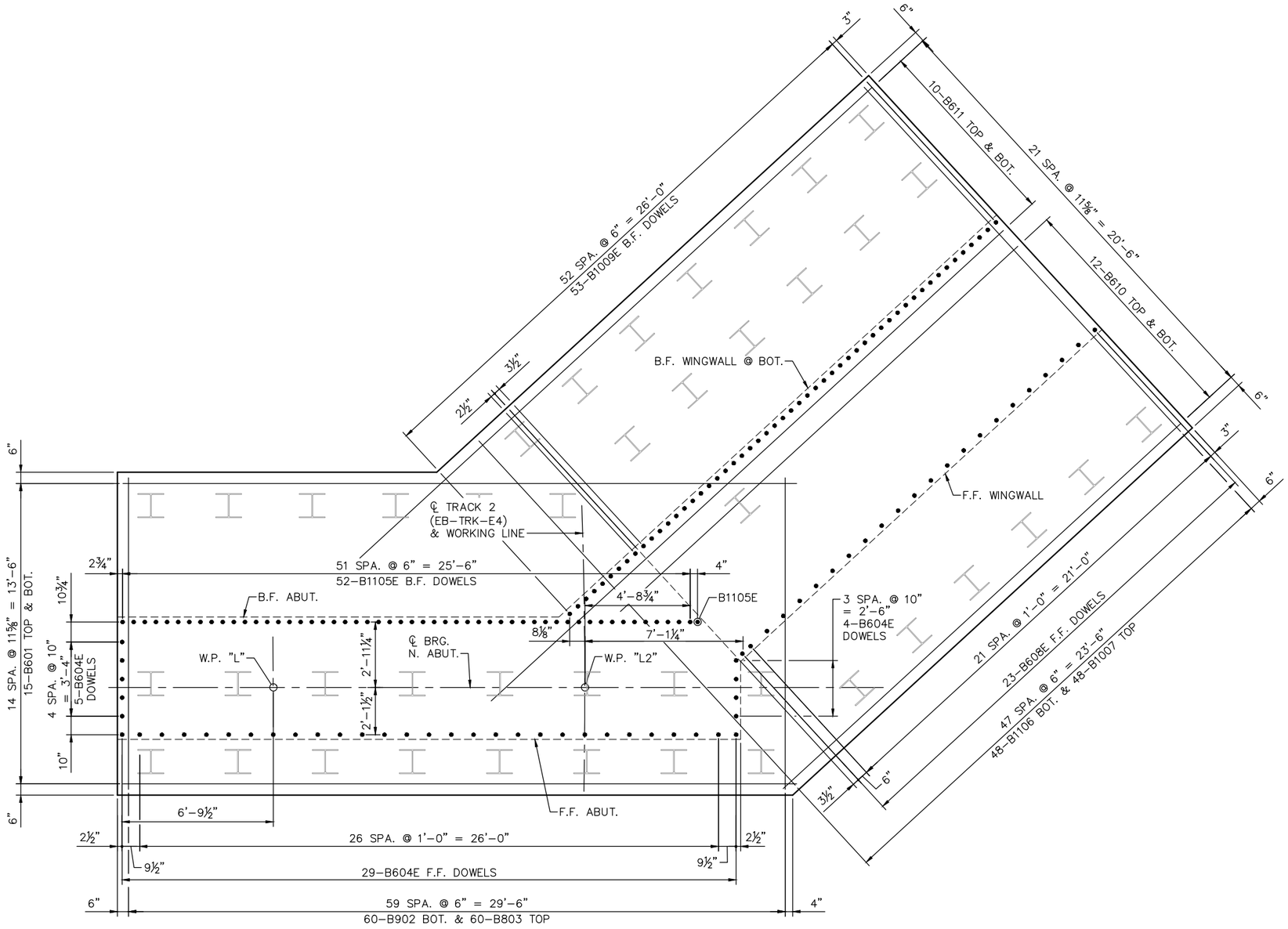

FOOTING PLAN

NOTES:

F.F. DENOTES FRONT FACE
B.F. DENOTES BACK FACE
E.F. DENOTES EACH FACE

NO.	DATE	BY	CHECK	DESIGN	REVISION / SUBMITTAL

DESIGNED BY: BAW | CHECKED BY: EJT
DRAWN BY: LMT | CHECKED BY: EJT

AECOM Kimley»Horn

90% SUBMISSION - 01/22/16

METROPOLITAN COUNCIL

SOUTHWEST Green Line LRT Extension

CIVIL - VOLUME 4G
LRT OVER BNSF
BRIDGE R0697
NORTH ABUTMENT REINFORCEMENT 1

DISCIPLINE: STRUCTURES

SHEET NAME: CBRR0697-BRG-ABT-002-7

SHEET 25 OF 118

Jan, 18 2016 01:38 pm v:\3400_ADC\CAD\SEGMENT E4\PLAN SHEETS\STRUCTURES\R0697\CBRR0697-BRG-ABT-002.dwg By: lisa.thompson

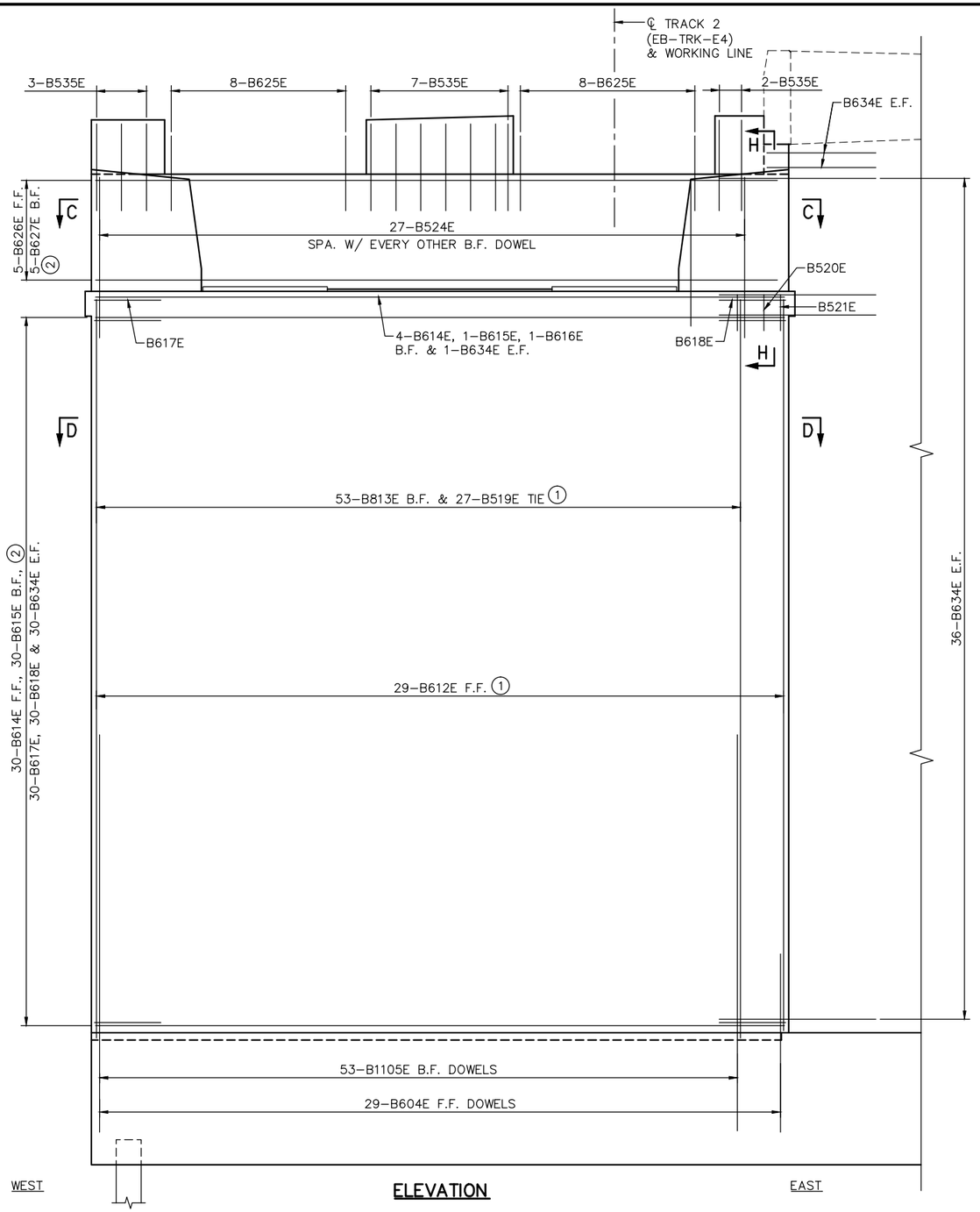

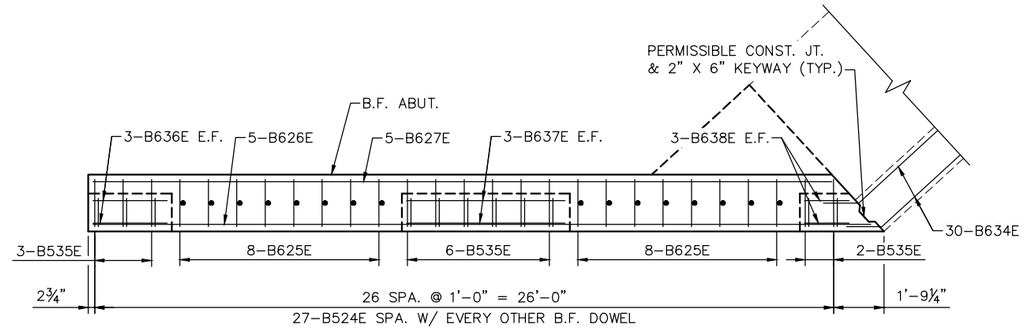

WEST

SECTION C–C

EAST

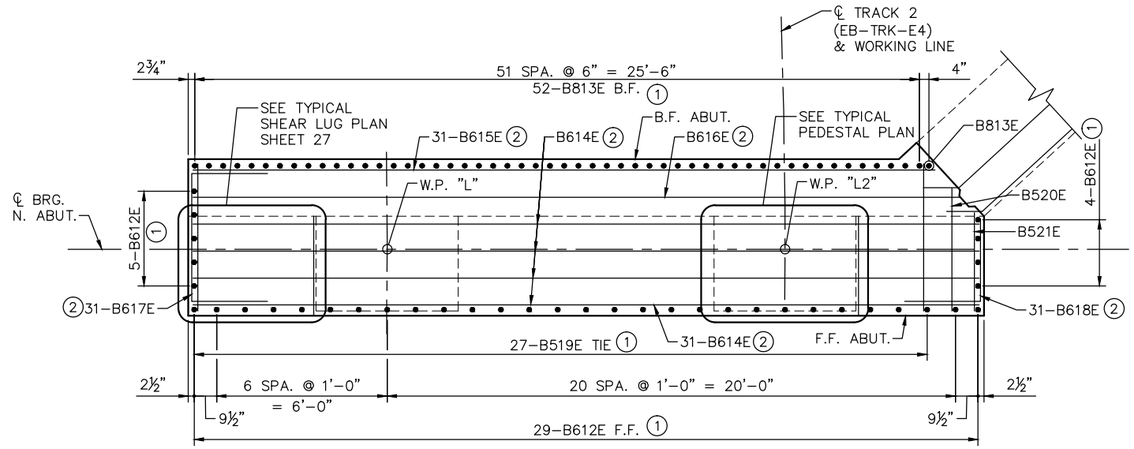

WEST

SECTION D–D

EAST

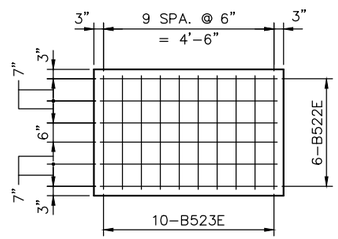

TYPICAL PEDESTAL PLAN

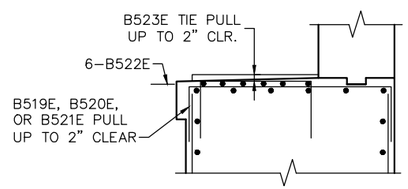

TYPICAL PEDESTAL SECTION

NOTES:

F.F. DENOTES FRONT FACE
B.F. DENOTES BACK FACE
E.F. DENOTES EACH FACE

SEE SHEET 28 FOR SECTION E–E.

SEE SHEET 27 FOR SECTION H–H.

① SPACED WITH FOOTING DOWELS.

② SPACED WITH HORIZONTAL REINFORCEMENT.

NO.	DATE	BY	CHECK	DESIGN	REVISION / SUBMITTAL

DESIGNED BY: BAW | CHECKED BY: EJT
DRAWN BY: LMT | CHECKED BY: EJT

AECOM Kimley»Horn

90% SUBMISSION - 01/22/16

METROPOLITAN COUNCIL

SOUTHWEST Green Line LRT Extension

CIVIL - VOLUME 4G
LRT OVER BNSF
BRIDGE R0697
NORTH ABUTMENT REINFORCEMENT 2

DISCIPLINE: STRUCTURES
SHEET NAME: CBRR0697-BRG-ABT-002-8

SHEET 26 OF 118

Jan, 18 2016 01:38 pm v:\3400_ADC\CAD\SEGMENT E4\PLAN SHEETS\STRUCTURES\R0697\CBRR0697-BRG-ABT-002.dwg By: lisa.thompson

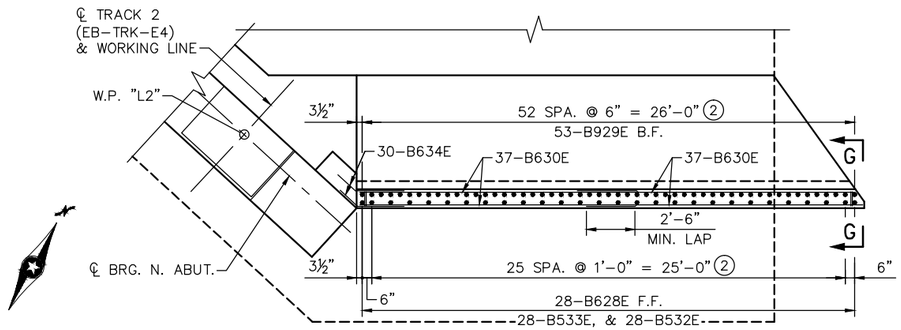

PLAN

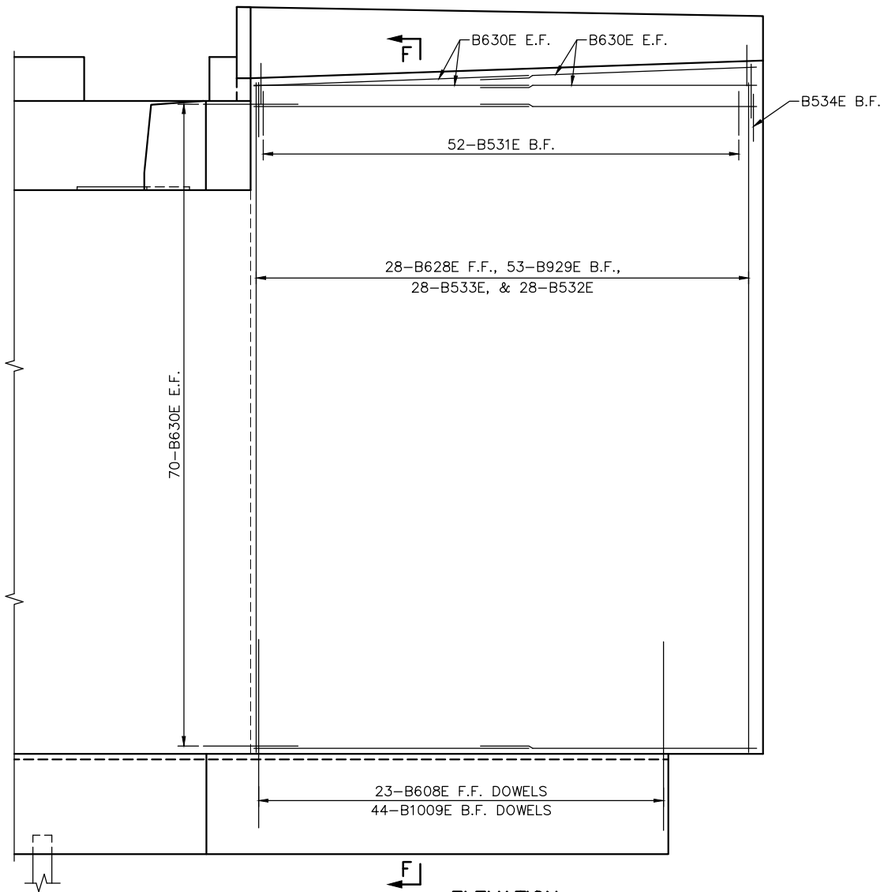

ELEVATION

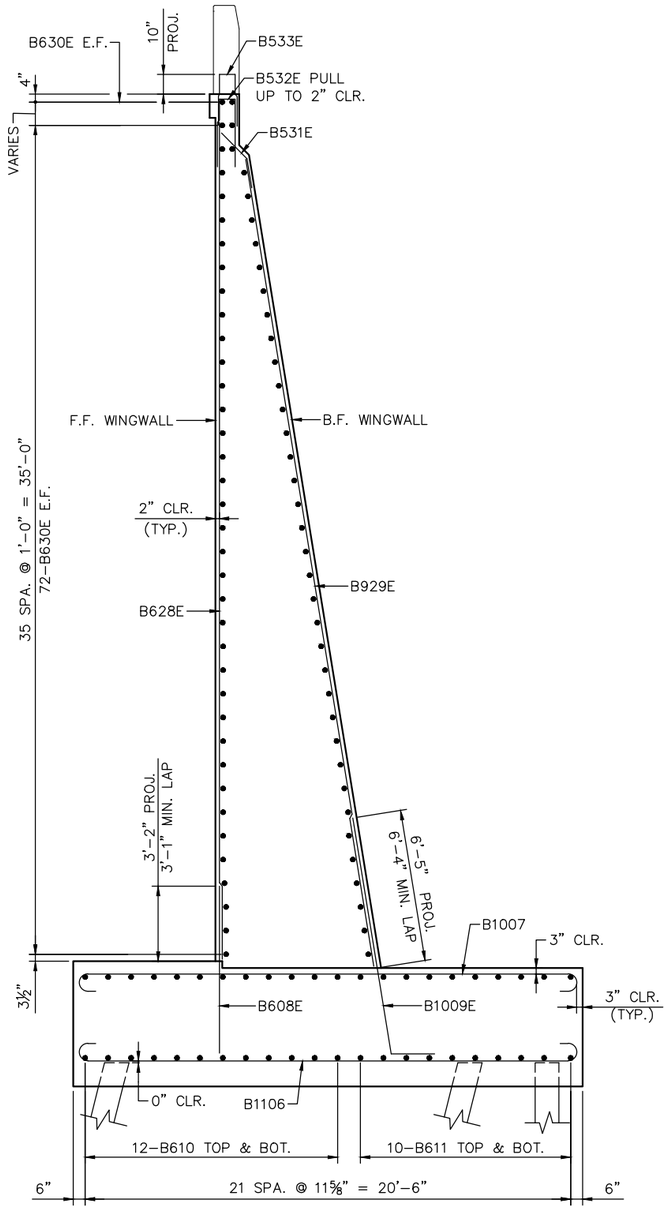

SECTION F–F

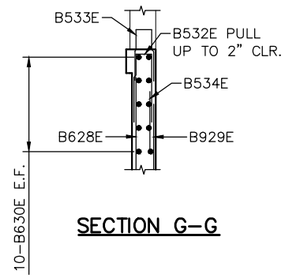

SECTION G–G

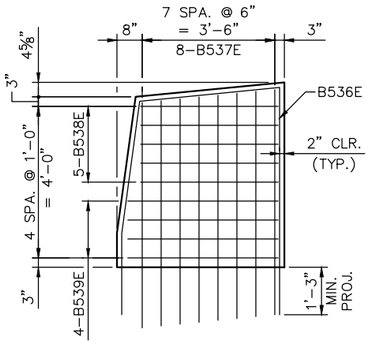

SECTION H–H

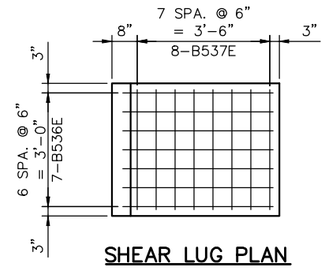

SHEAR LUG PLAN

NOTES:

F.F. DENOTES FRONT FACE
B.F. DENOTES BACK FACE
E.F. DENOTES EACH FACE

SEE SHEET 26 FOR LOCATION OF SECTION H–H.

NO.	DATE	BY	CHECK	DESIGN	REVISION / SUBMITTAL

DESIGNED BY: BAW | CHECKED BY: EJT
DRAWN BY: LMT | CHECKED BY: EJT

AECOM Kimley»Horn

90% SUBMISSION - 01/22/16

METROPOLITAN COUNCIL

SOUTHWEST Green Line LRT Extension

CIVIL - VOLUME 4G
LRT OVER BNSF
BRIDGE R0697
NORTH ABUTMENT REINFORCEMENT 3

DISCIPLINE: STRUCTURES
SHEET NAME: CBRR0697-BRG-ABT-002-9

SHEET 27 OF 118

Jan, 18 2016 01:38 pm v:\3400_ADC\CAD\SEGMENT E4\PLAN SHEETS\STRUCTURES\R0697\CBRR0697-BRG-ABT-002.dwg By: lisa.thompson

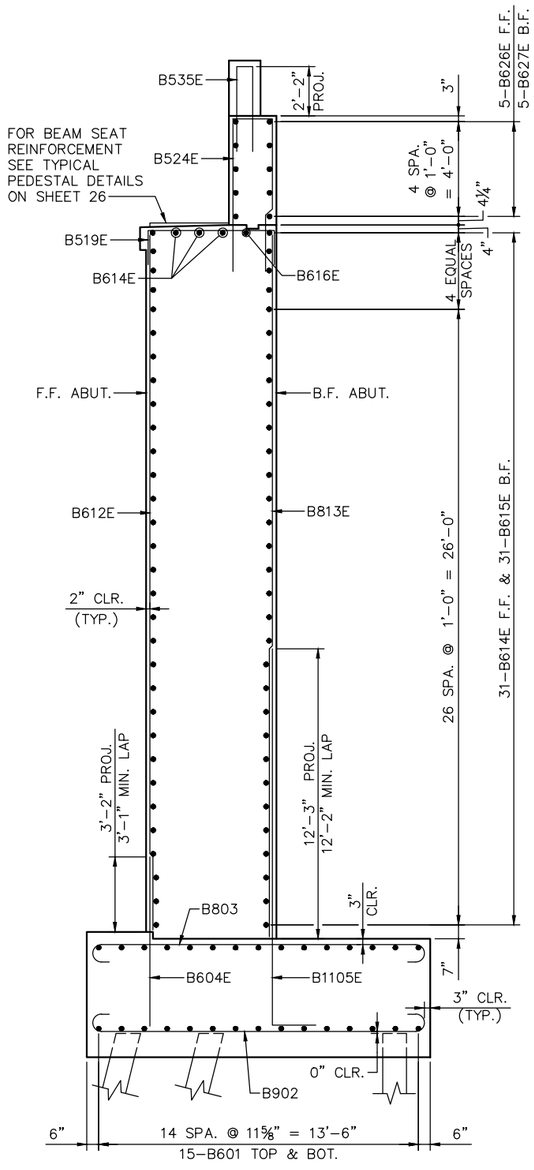

SECTION E-E

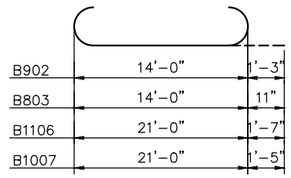

B902, B803, B1106, & B1007

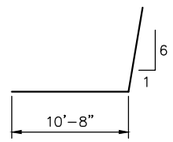

B1009E

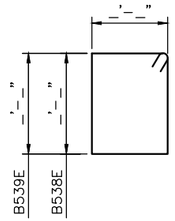

B538E & B539E

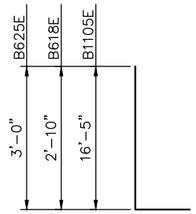

B1105E, B618E, & B625E

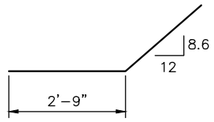

B531E

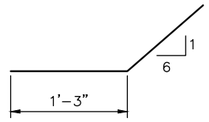

B634E

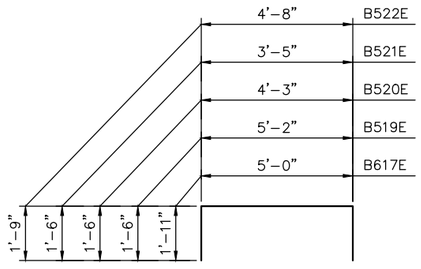

B617E, B519E, B520E, B521E, & B522E

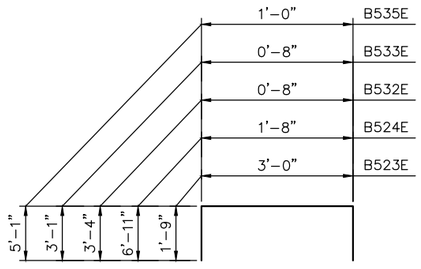

B523E, B524E, B532E, B533E, & B535E

BILL OF REINFORCEMENT FOR NORTH ABUTMENT

BAR	NO.	LENGTH	SHAPE	LOCATION
B601	30	30'-3"	STR.	FOOTING, LONG. TOP & BOT.
B902	60	16'-6"	BENT	FOOTING, TRANS. BOT.
B803	60	15'-10"	BENT	FOOTING, TRANS. TOP
B604E	38	5'-10"	STR.	FOOTING, DOWEL F.F.
B1105E	53	18'-5"	BENT	FOOTING, DOWEL B.F.
B1106	48	24'-2"	BENT	FOOTING, TRANS. BOT.
B1007	48	23'-10"	BENT	FOOTING, TRANS. TOP
B608E	23	7'-8"	STR.	FOOTING, DOWEL F.F.
B1009E	53	12'-6"	BENT	FOOTING, DOWEL B.F.
B610	24	24'-3"	STR.	FOOTING, LONG. TOP & BOT.
B611	20	28'-10"	STR.	FOOTING, LONG. TOP & BOT.
B612E	38	29'-5"	STR.	STEM, VERT. F.F.
B813E	53	29'-10"	STR.	STEM, VERT. B.F.
B614E	34	27'-8"	STR.	STEM, HORZ.
B615E	31	26'-1"	STR.	STEM, HORZ. B.F.
B616E	1	26'-11"	STR.	STEM, HORZ.
B617E	31	8'-10"	BENT	STEM, TIE
B618E	31	4'-10"	BENT	STEM, TIE
B519E	27	8'-2"	BENT	STEM, TIE
B520E	1	7'-3"	BENT	STEM, TIE
B521E	1	6'-5"	BENT	STEM, TIE
B522E	12	8'-2"	BENT	PEDESTAL, TIE
B523E	20	6'-6"	BENT	PEDESTAL, TIE
B524E	27	15'-6"	BENT	BACKWALL, TIE
B625E	16	4'-0"	BENT	BACKWALL, VERT.
B626E	5	27'-4"	STR.	BACKWALL, HORZ. F.F.
B627E	5	26'-0"	STR.	BACKWALL, HORZ. B.F.
B628E	28	35'-3"	STR.	WINGWALL, VERT. F.F.
B929E	53	24'-6"	STR.	WINGWALL, VERT. B.F.
B630E	148	14'-8"	STR.	WINGWALL, HORZ. E.F.
B531E	53	4'-3"	BENT	WINGWALL, TIE B.F.
B532E	28	7'-4"	BENT	WINGWALL, TIE
B533E	28	6'-10"	BENT	BARRIER, TIE
B634E	71	7'-0"	BENT	WINGWALL, TIE B.F.
B535E	11	11'-2"	BENT	PAVING BLOCK, TIE
B536E	0	'-"	BENT	SHEAR LUG, TIE
B537E	0	'-"	BENT	SHEAR LUG, TIE
B538E	0	'-"	BENT	SHEAR LUG, STIRRUP
B539E	0	'-"	BENT	SHEAR LUG, STIRRUP

NOTES:

F.F. DENOTES FRONT FACE
B.F. DENOTES BACK FACE
E.F. DENOTES EACH FACE

SEE SHEET 26 FOR LOCATION OF SECTION E-E.

NO.	DATE	BY	CHECK	DESIGN	REVISION / SUBMITTAL

DESIGNED BY: BAW | CHECKED BY: EJT
DRAWN BY: LMT | CHECKED BY: EJT

AECOM Kimley»Horn

90% SUBMISSION - 01/22/16

METROPOLITAN COUNCIL

SOUTHWEST Green Line LRT Extension

CIVIL - VOLUME 4G
LRT OVER BNSF
BRIDGE R0697
NORTH ABUTMENT REINFORCEMENT 4

DISCIPLINE: STRUCTURES

SHEET NAME: CBRR0697-BRG-ABT-002-10

SHEET 28 OF 118

Jan, 18 2016 01:38 pm V:\3400_ADC\CAD\SEGMENT E4\PLAN SHEETS\STRUCTURES\R0697\CBRR0697-BRG-ABT-002.dwg By: lisa.thompson

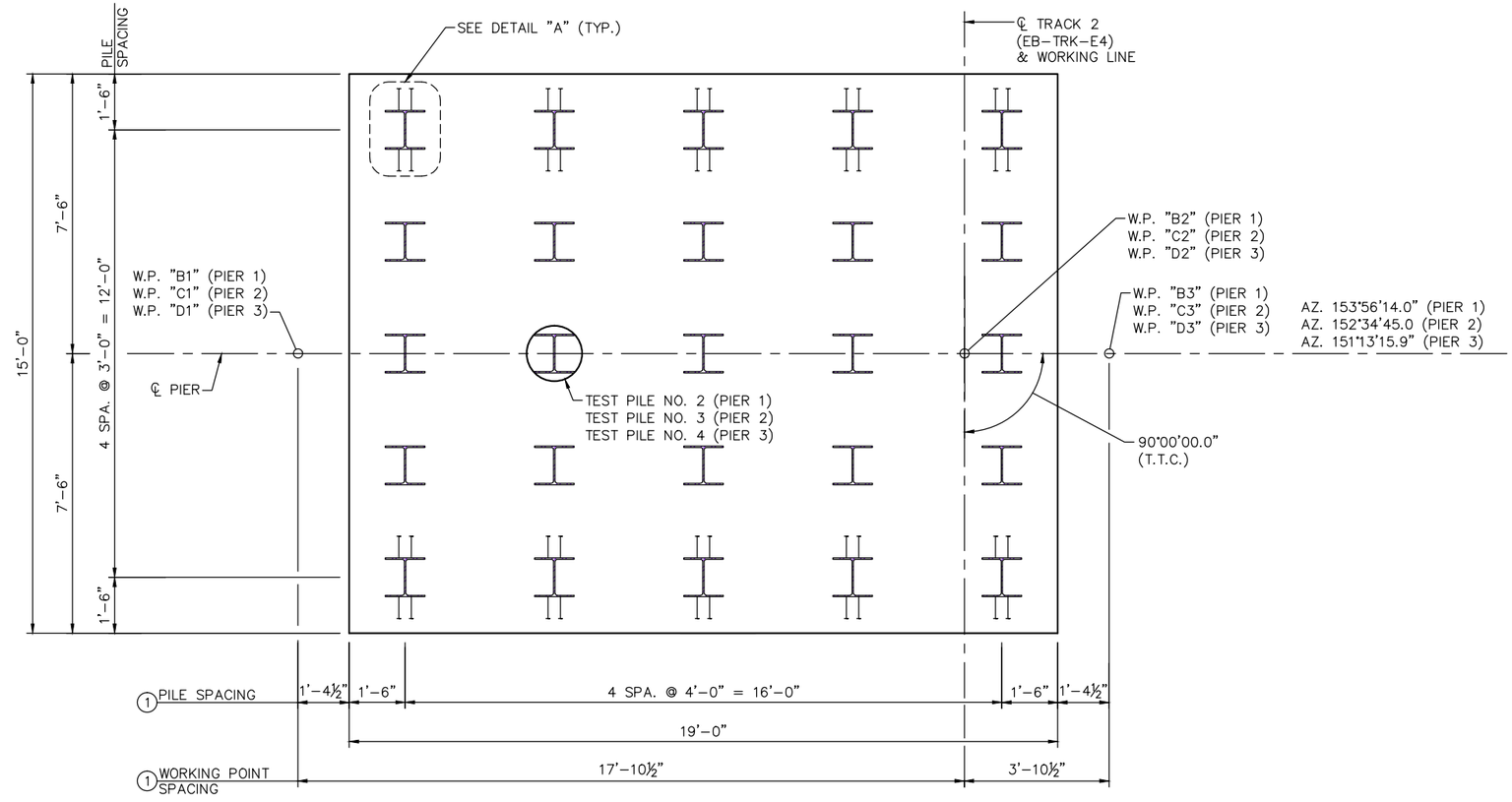

FOOTING PLAN
(PIER 1, 2, & 3)

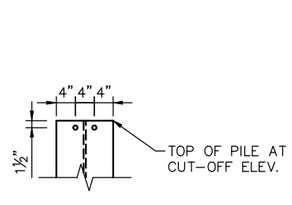

PILE ELEVATION

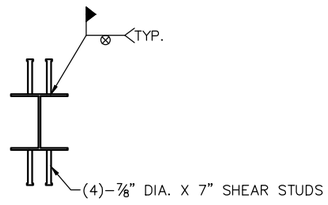

PILE PLAN

DETAIL "A"

PIER 1, 2, & 3 COMPUTED PILE LOAD - TONS/PILE	
FACTORED DEAD LOAD	43.8
FACTORED LIVE LOAD	6.6
FACTORED OVERTURNING	51.9
* FACTORED DESIGN LOAD	102.3

* BASED ON STRENGTH V LOAD COMBINATION.

PIER 1, 2 & 3 REQUIRED NOMINAL PILE BEARING RESISTANCE FOR H-PILES Rn - TONS/PILE		
FIELD CONTROL METHOD	φdyn	* Rn
MN/DOT PILE FORMULA 2012 (MPF12) $R_n = 20\sqrt{\frac{W\,x\,H}{1000}}\,x\log\left(\frac{10}{S}\right)$	0.60	171

* Rn = (FACTORED DESIGN LOAD) / φdyn

GENERAL PILE NOTES (PIER 1)

1 STEEL HP12x53–TEST PILES 75 FT. LONG
24 STEEL HP12x53–PILES EST. LENGTH 75 FT.
25 STEEL HP12x53–PILES REQ'D FOR PIER 1

GENERAL PILE NOTES (PIER 2)

1 STEEL HP12x53–TEST PILES 65 FT. LONG
24 STEEL HP12x53–PILES EST. LENGTH 65 FT.
25 STEEL HP12x53–PILES REQ'D FOR PIER 2

GENERAL PILE NOTES (PIER 3)

1 STEEL HP12x53–TEST PILES 55 FT. LONG
24 STEEL HP12x53–PILES EST. LENGTH 55 FT.
25 STEEL HP12x53–PILES REQ'D FOR PIER 3

PILE NOTES:

PIER PILES ARE TO BE HP12x53 WITH PILE TIP PROTECTION.

PILE SPACING SHOWN IS AT BOTTOM OF FOOTING.

FOR PILE SPLICE DETAILS SEE DETAIL B202.

NOTES:

1 DIMENSIONS MEASURED ALONG ℄ OF PIER.

NO.	DATE	BY	CHECK	DESIGN	REVISION / SUBMITTAL

DESIGNED BY: RHK CHECKED BY: JBW
DRAWN BY: LMT CHECKED BY: EJT

AECOM Kimley»Horn

90% SUBMISSION - 01/22/16

METROPOLITAN COUNCIL

SOUTHWEST Green Line LRT Extension

CIVIL - VOLUME 4G
LRT OVER BNSF
BRIDGE R0697
PIER 1, 2, AND 3 DETAILS 1

DISCIPLINE: STRUCTURES
SHEET NAME: CBRR0697-BRG-PIR-001-1

SHEET 29 OF 118

Jan, 18 2016 01:39 pm V:\3400_ADC\CAD\SEGMENT E4\PLAN SHEETS\STRUCTURES\R0697\CBRR0697-BRG-PIR-001.dwg By: lisa.thompson

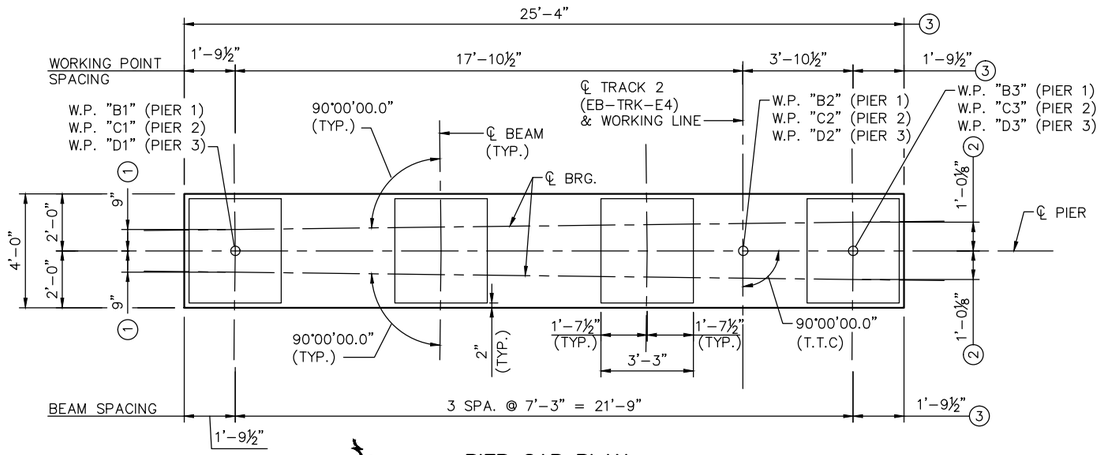

PIER CAP PLAN
(PIER 1, 2, & 3)

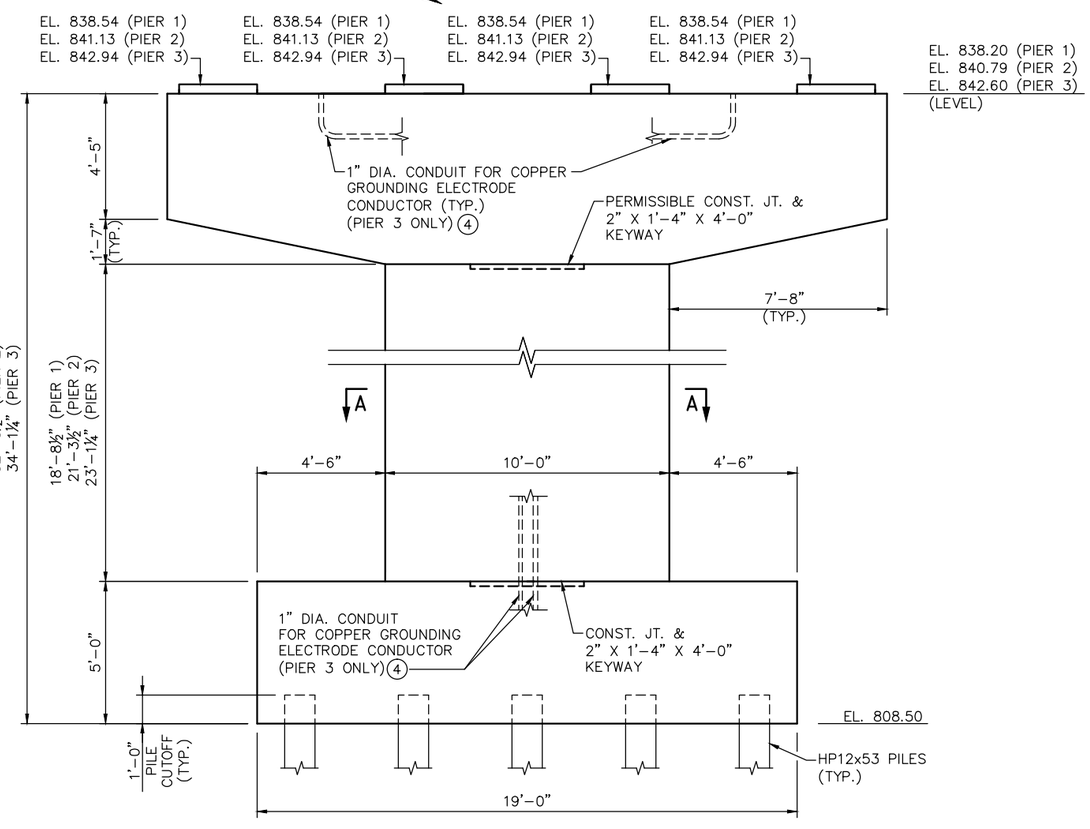

ELEVATION
(PIER 1, 2, & 3)

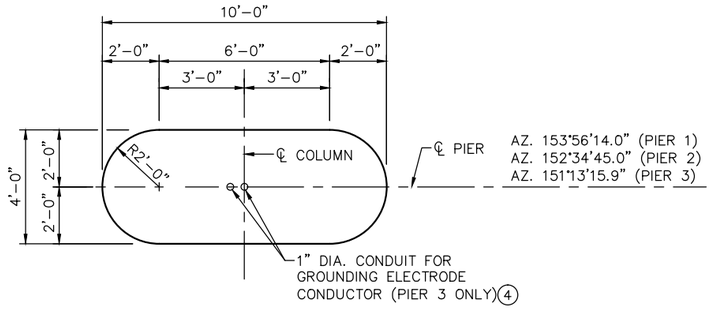

SECTION A-A
(PIER 1, 2, & 3)

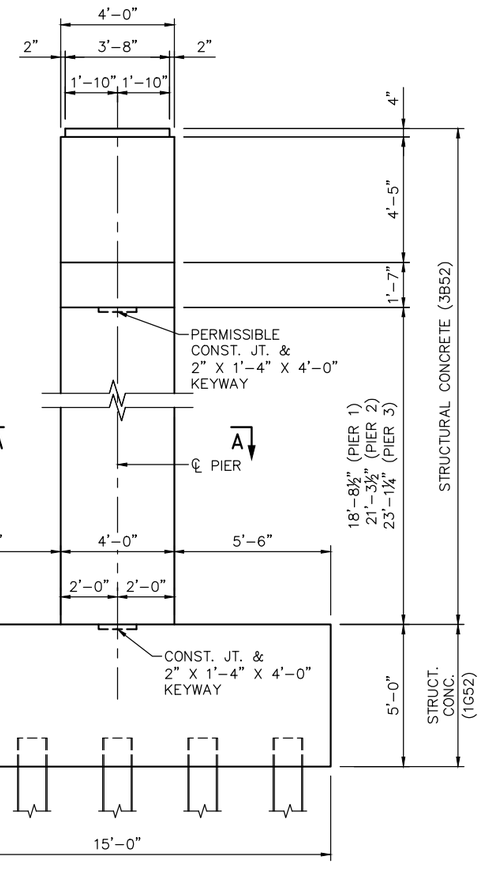

END ELEVATION
(PIER 1, 2, & 3)

NOTES:

1. DIMENSIONS MEASURED ALONG ℄ OF BEAM @ W.P. "B1" (PIER 1), W.P. "C1" (PIER 2), AND W.P. "D1" (PIER 3).
2. DIMENSIONS MEASURED ALONG ℄ OF BEAM @ W.P. "B3" (PIER 1), W.P. "C3" (PIER 2), AND W.P. "D3" (PIER 3).
3. DIMENSIONS MEASURED ALONG ℄ OF PIER.
4. GROUNDING SYSTEM, SEE SYSTEMWIDE ELECTRICAL FOR DETAILS.

NO.	DATE	BY	CHECK	DESIGN	REVISION / SUBMITTAL

DESIGNED BY: RHK | CHECKED BY: JBW
DRAWN BY: LMT | CHECKED BY: EJT

AECOM Kimley»Horn

90% SUBMISSION - 01/22/16

METROPOLITAN COUNCIL

SOUTHWEST Green Line LRT Extension

CIVIL - VOLUME 4G
LRT OVER BNSF
BRIDGE R0697
PIER 1, 2, AND 3 DETAILS 2

DISCIPLINE: STRUCTURES
SHEET NAME: CBRR0697-BRG-PIR-001-2

SHEET 30 OF 118

Jan, 18 2016 01:39 pm V:\3400_ADC\CAD\SEGMENT E4\PLAN SHEETS\STRUCTURES\R0697\CBRR0697-BRG-PIR-001.dwg By: lisa.thompson

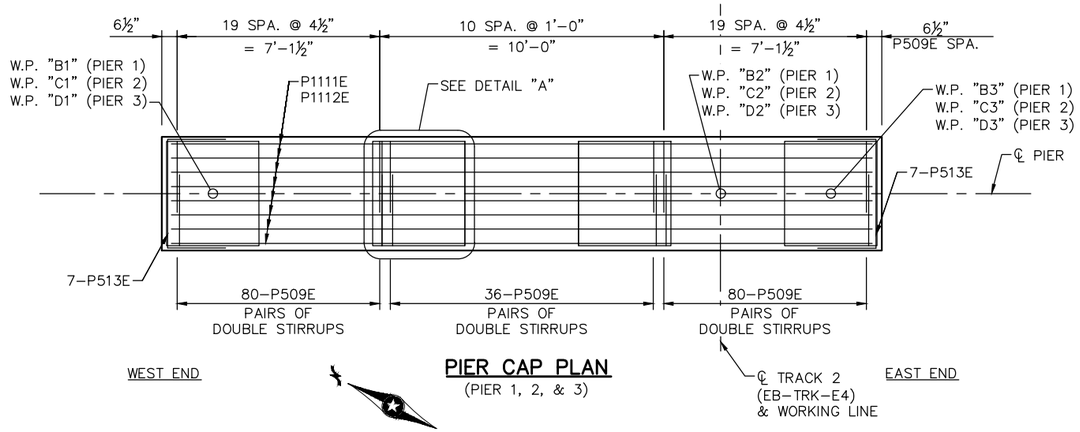

PIER CAP PLAN
(PIER 1, 2, & 3)

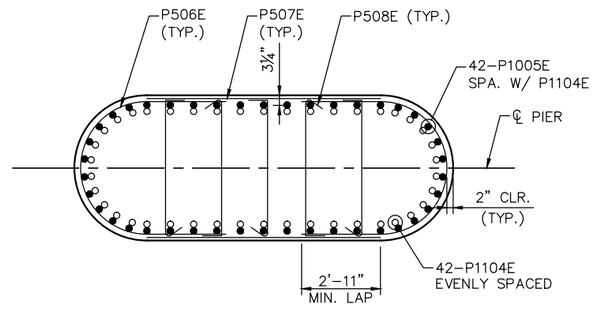

SECTION A-A
(PIER 1, 2, & 3)

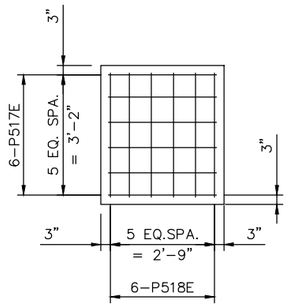

DETAIL A
(PIER 1, 2, & 3)

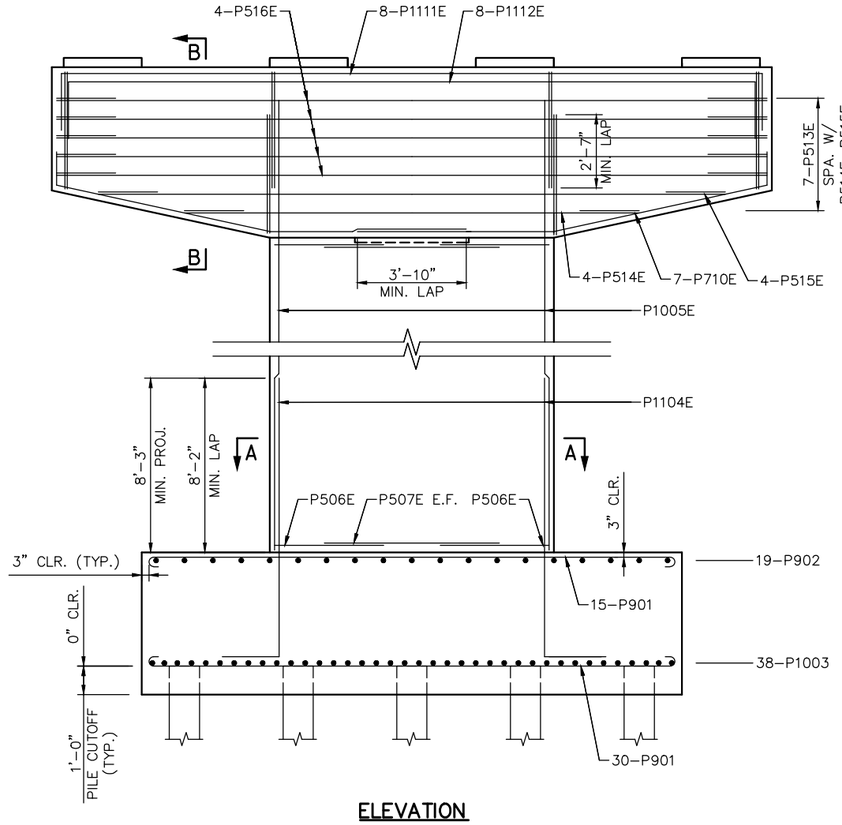

ELEVATION
(PIER 1, 2, & 3)

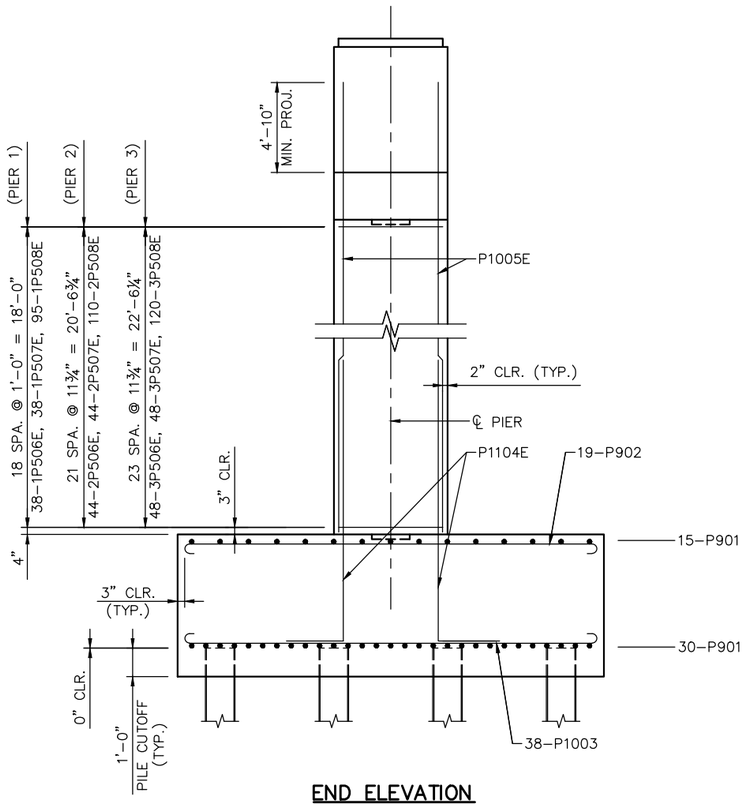

END ELEVATION
(PIER 1, 2, & 3)

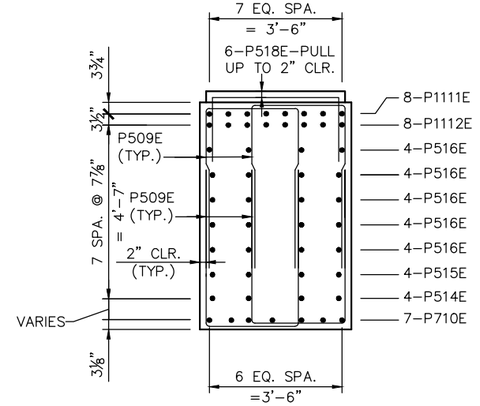

SECTION B-B
(PIER 1, 2, & 3)

NO.	DATE	BY	CHECK	DESIGN	REVISION / SUBMITTAL

DESIGNED BY: RHK | CHECKED BY: JBW
DRAWN BY: LMT | CHECKED BY: EJT

AECOM Kimley»Horn

90% SUBMISSION - 01/22/16

METROPOLITAN COUNCIL

SOUTHWEST Green Line LRT Extension

CIVIL - VOLUME 4G
LRT OVER BNSF
BRIDGE R0697
PIER 1, 2, AND 3 REINFORCEMENT 1

DISCIPLINE: STRUCTURES
SHEET NAME: CBRR0697-BRG-PIR-001-3

SHEET 31 OF 118

Jan, 18 2016 01:39 pm V:\3400_ADC\CAD\SEGMENT E4\PLAN SHEETS\STRUCTURES\R0697\CBRR0697-BRG-PIR-001.dwg By: lisa.thompson

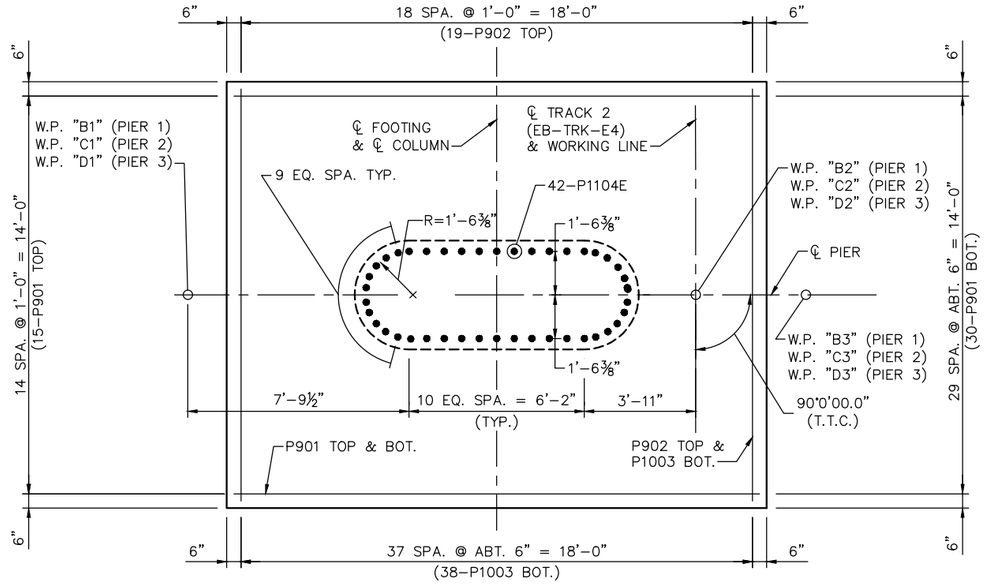

WEST END

FOOTING REINFORCEMENT PLAN
(PIER 1, 2, & 3)

EAST END

BILL OF REINFORCEMENT FOR PIER 1

BAR	NO.	LENGTH	SHAPE	LOCATION
1P901	45	21'-0"	BENT	FOOTING, TRANS. TOP & BOT.
1P902	19	17'-0"	BENT	FOOTING, LONG. TOP
1P1003	38	17'-4"	BENT	FOOTING, LONG. BOT
1P1104E	42	14'-4"	BENT	FOOTING, DOWEL
1P1005E	42	23'-7"	STR.	COLUMN, VERT.
1P506E	40	9'-11"	BENT	COLUMN, TIE
1P507E	40	6'-0"	STR.	COLUMN, TIE
1P508E	100	4'-8"	BENT	COLUMN, TIE
1P509E	196	10'-10"	BENT	CAP, STIRRUPS
1P710E	14	15'-9"	BENT	CAP, LONG. BOT.
1P1111E	8	28'-8"	BENT	CAP, LONG. TOP (TOP)
1P1112E	8	28'-2"	BENT	CAP, LONG. TOP (BOT.)
1P513E	10	7'-8"	BENT	CAP, END TIE
1P514E	4	16'-10"	STR.	CAP, T&S BOT.
1P515E	4	23'-2"	STR.	CAP, T&S BOT.
1P516E	20	25'-0"	STR.	CAP, T&S
1P517E	24	5'-7"	BENT	PEDESTAL, TIE
1P518E	24	6'-2"	BENT	PEDESTAL, TIE

BILL OF REINFORCEMENT FOR PIER 2

BAR	NO.	LENGTH	SHAPE	LOCATION
2P901	45	21'-0"	BENT	FOOTING, TRANS. TOP & BOT.
2P902	19	17'-0"	BENT	FOOTING LONG. TOP
2P1003	38	17'-4"	BENT	FOOTING LONG. BOT
2P1104E	42	14'-4"	BENT	FOOTING DOWELS
2P1005E	42	26'-2"	STR.	COLUMN VERTS
2P506E	44	9'-11"	BENT	COLUMN TIES
2P507E	44	6'-0"	STR.	COLUMN TIES
2P508E	115	4'-8"	BENT	COLUMN TIES
2P509E	196	10'-10"	BENT	CAP STIRRUPS
2P710E	14	15'-9"	BENT	CAP LONG. BOT.
2P1111E	8	28'-8"	BENT	CAP LONG. TOP (TOP)
2P1112E	8	28'-2"	BENT	CAP LONG. TOP (BOT.)
2P513E	10	7'-8"	BENT	CAP END TIES
2P514E	4	16'-10"	STR.	CAP T&S BOT.
2P515E	4	23'-2"	STR.	CAP T&S BOT.
2P516E	20	25'-0"	STR.	CAP T&S
2P517E	24	5'-7"	BENT	PEDESTAL TIES
2P518E	24	6'-2"	BENT	PEDESTAL TIES

BILL OF REINFORCEMENT FOR PIER 3

BAR	NO.	LENGTH	SHAPE	LOCATION
3P901	45	21'-0"	BENT	FOOTING, TRANS. TOP & BOT.
3P902	19	17'-0"	BENT	FOOTING LONG. TOP
3P1003	38	17'-4"	BENT	FOOTING LONG. BOT
3P1104E	42	14'-4"	BENT	FOOTING DOWELS
3P1005E	42	28'-0"	STR.	COLUMN VERTS
3P506E	48	9'-11"	BENT	COLUMN TIES
3P507E	48	6'-0"	STR.	COLUMN TIES
3P508E	125	4'-8"	BENT	COLUMN TIES
3P509E	196	10'-10"	BENT	CAP STIRRUPS
3P710E	14	15'-9"	BENT	CAP LONG. BOT.
3P1111E	8	28'-8"	BENT	CAP LONG. TOP (TOP)
3P1112E	8	28'-2"	BENT	CAP LONG. TOP (BOT.)
3P513E	10	7'-8"	BENT	CAP END TIES
3P514E	4	16'-10"	STR.	CAP T&S BOT.
3P515E	4	23'-2"	STR.	CAP T&S BOT.
3P516E	20	25'-0"	STR.	CAP T&S
3P517E	24	5'-7"	BENT	PEDESTAL TIES
3P518E	24	6'-2"	BENT	PEDESTAL TIES

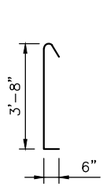

P508E

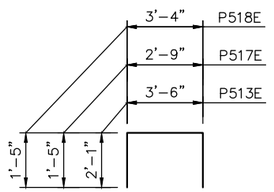

P513E, P517E, P518E



P1104E

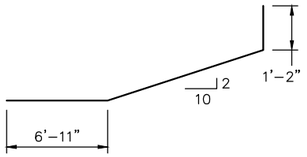

P710E

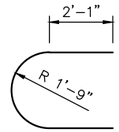

P506E

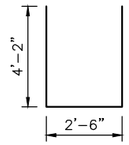

P509E

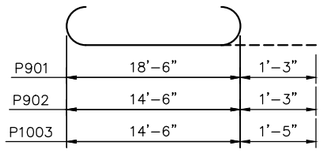

P901, P902, P1003

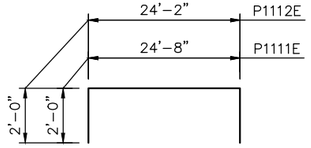

P1111E, P1112E

NOTES:

PILES NOT SHOWN IN FOOTING REINFORCEMENT PLAN FOR CLARITY.

NO.	DATE	BY	CHECK	DESIGN	REVISION / SUBMITTAL

DESIGNED BY: RHK | CHECKED BY: JBW
DRAWN BY: LMT | CHECKED BY: EJT

AECOM Kimley»Horn

90% SUBMISSION - 01/22/16

METROPOLITAN COUNCIL

SOUTHWEST Green Line LRT Extension

CIVIL - VOLUME 4G
LRT OVER BNSF
BRIDGE R0697
PIER 1, 2, AND 3 REINFORCEMENT 2

DISCIPLINE: STRUCTURES
SHEET NAME: CBRR0697-BRG-PIR-001-4

SHEET 32 OF 118

Jan, 18 2016 01:39 pm V:\3400_ADC\CAD\SEGMENT E4\PLAN SHEETS\STRUCTURES\R0697\CBRR0697-BRG-PIR-001.dwg By: lisa.thompson

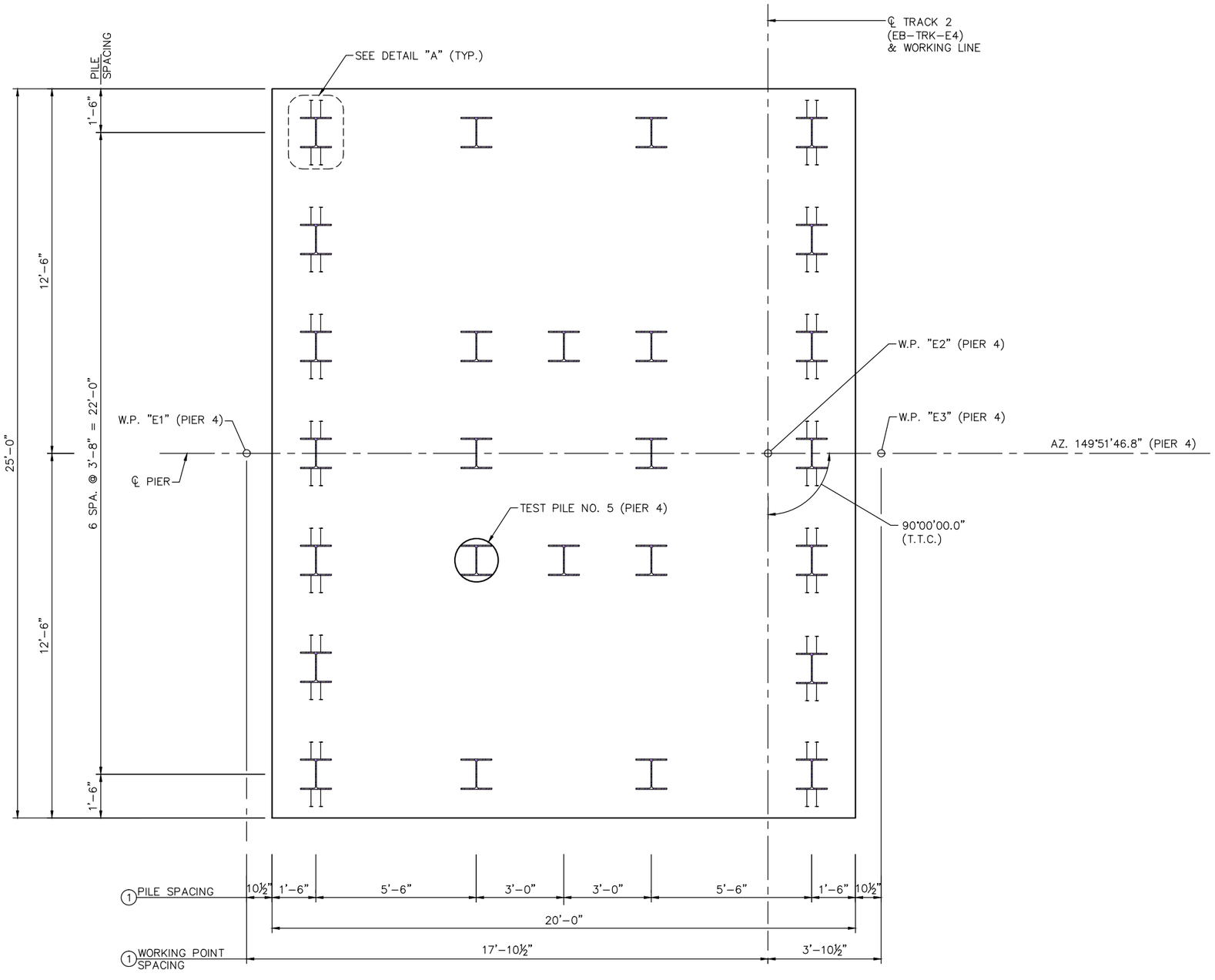

FOOTING PLAN
(PIER 4)

PIER 4 COMPUTED PILE LOAD - TONS/PILE	
FACTORED DEAD LOAD	45.0
FACTORED LIVE LOAD	12.4
FACTORED OVERTURNING	45.8
* FACTORED DESIGN LOAD	103.2

* BASED ON STRENGTH V LOAD COMBINATION.

PIER 4 REQUIRED NOMINAL PILE BEARING RESISTANCE FOR H-PILES Rn - TONS/PILE		
FIELD CONTROL METHOD	φdyn	* Rn
MN/DOT PILE FORMULA 2012 (MPF12) $R_n = 20\sqrt{\frac{W \times H}{1000}} x log\left(\frac{10}{S}\right)$	0.60	172

* Rn = (FACTORED DESIGN LOAD) / φdyn

GENERAL PILE NOTES (PIER 4)

1 STEEL HP12x53–TEST PILES 50 FT. LONG
25 STEEL HP12x53–PILES EST. LENGTH 50 FT.
26 STEEL HP12x53–PILES REQ'D FOR PIER 4

PIER PILES ARE TO BE HP12x53 WITH PILE TIP PROTECTION.

PILE SPACING SHOWN IS AT BOTTOM OF FOOTING.

FOR PILE SPLICE DETAILS SEE DETAIL B202.

NOTES:

SEE SHEET 29 FOR DETAIL "A".

(1) DIMENSIONS MEASURED ALONG ℄ OF PIER.

NO.	DATE	BY	CHECK	DESIGN	REVISION / SUBMITTAL

DESIGNED BY: RHK CHECKED BY: JBW
DRAWN BY: LMT CHECKED BY: EJT

AECOM Kimley»Horn

90% SUBMISSION - 01/22/16

METROPOLITAN COUNCIL

SOUTHWEST Green Line LRT Extension

CIVIL - VOLUME 4G
LRT OVER BNSF
BRIDGE BRIDGE R0697
PIER 4 AND 5 DETAILS 1

DISCIPLINE: STRUCTURES
SHEET NAME: CBRR0697-BRG-PIR-001-5

SHEET 33 OF 118

Jan, 18 2016 01:39 pm V:\3400_ADC\CAD\SEGMENT E4\PLAN SHEETS\STRUCTURES\R0697\CBRR0697-BRG-PIR-001.dwg By: lisa.thompson

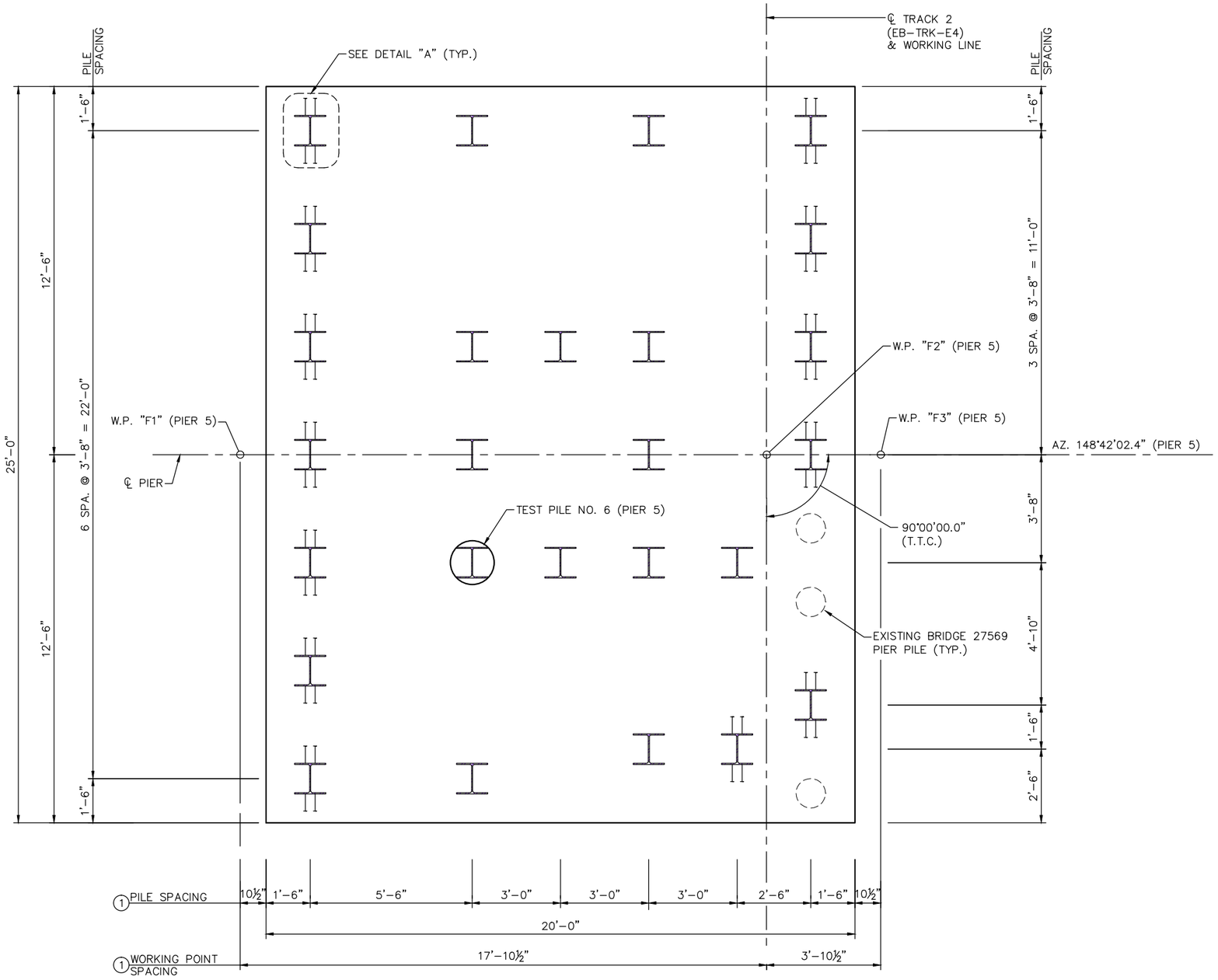

WEST END

FOOTING PLAN
(PIER 5)

EAST END

PIER 5 COMPUTED PILE LOAD - TONS/PILE	
FACTORED DEAD LOAD	45.0
FACTORED LIVE LOAD	12.4
FACTORED OVERTURNING	47.1
* FACTORED DESIGN LOAD	104.5

* BASED ON STRENGTH V LOAD COMBINATION.

PIER 5 REQUIRED NOMINAL PILE BEARING RESISTANCE FOR H-PILES Rn - TONS/PILE		
FIELD CONTROL METHOD	φdyn	* Rn
MN/DOT PILE FORMULA 2012 (MPF12) $R_n = 20\sqrt{\frac{W\,x\,H}{1000}}\,x\log\left(\frac{10}{S}\right)$	0.60	174

* Rn = (FACTORED DESIGN LOAD) / φdyn

GENERAL PILE NOTES (PIER 5)

1 STEEL HP12x53–TEST PILES 50 FT. LONG
25 STEEL HP12x53–PILES EST. LENGTH 50 FT.
26 STEEL HP12x53–PILES REQ'D FOR PIER 5

PIER PILES ARE TO BE HP12x53 WITH PILE TIP PROTECTION.

PILE SPACING SHOWN IS AT BOTTOM OF FOOTING.

FOR PILE SPLICE DETAILS SEE DETAIL B202.

NOTES:

SEE SHEET 29 FOR DETAIL "A".

① DIMENSIONS MEASURED ALONG ℄ OF PIER.

NO.	DATE	BY	CHECK	DESIGN	REVISION / SUBMITTAL

DESIGNED BY: RHK CHECKED BY: JBW
DRAWN BY: LMT CHECKED BY: EJT

AECOM Kimley»Horn

90% SUBMISSION - 01/22/16

METROPOLITAN COUNCIL

SOUTHWEST Green Line LRT Extension

CIVIL - VOLUME 4G
LRT OVER BNSF
BRIDGE BRIDGE R0697
PIER 4 AND 5 DETAILS 2

DISCIPLINE: STRUCTURES
SHEET NAME: CBRR0697-BRG-PIR-001-6

SHEET 34 OF 118

Jan. 18 2016 01:39 pm V:\3400_ADC\CAD\SEGMENT E4\PLAN SHEETS\STRUCTURES\R0697\CBRR0697-BRG-PIR-001.dwg By: lisa.thompson

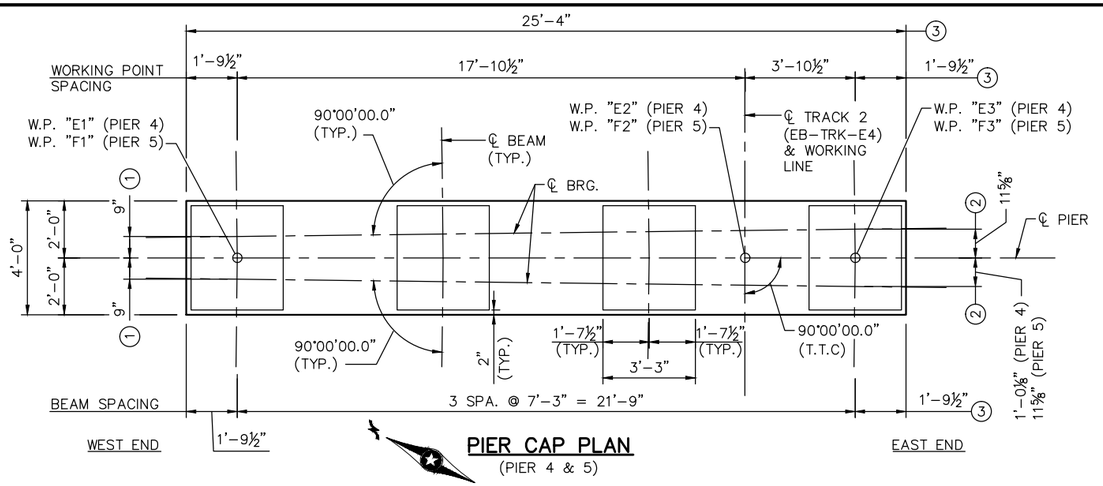

PIER CAP PLAN
(PIER 4 & 5)

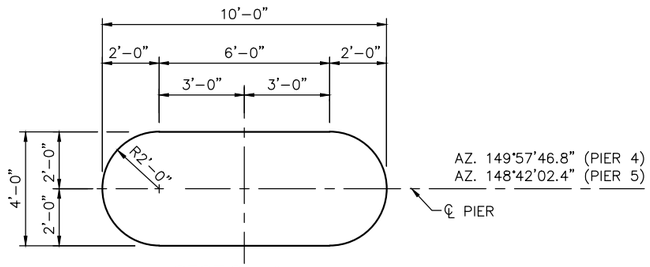

SECTION A-A
(PIER 4 & 5)

NOTES:

1. DIMENSIONS MEASURED ALONG ℄ OF BEAM @ W.P. "E1" (PIER 4) AND W.P. "F1" (PIER 5).
2. DIMENSIONS MEASURED ALONG ℄ OF BEAM @ W.P. "E3" (PIER 4) AND W.P. "F3" (PIER 5).
3. DIMENSIONS MEASURED ALONG ℄ OF PIER.

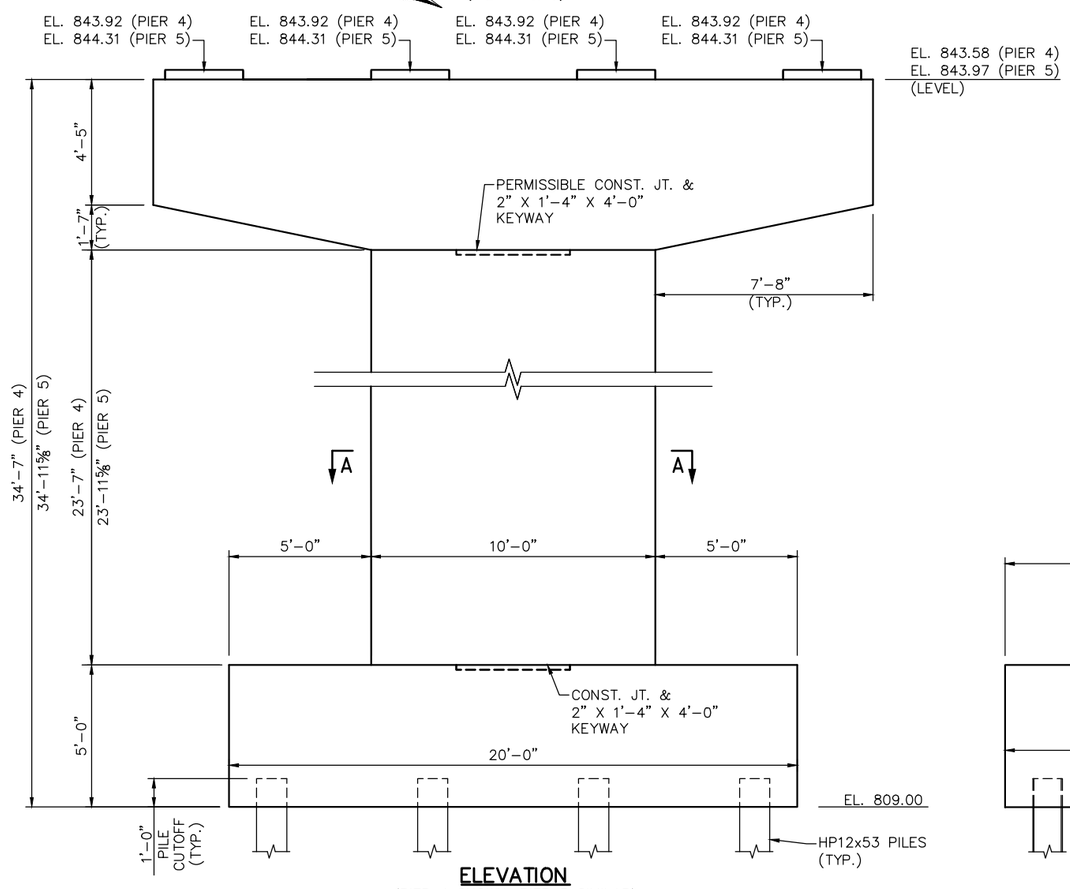

ELEVATION
(PIER 4 SHOWN, PIER 5 SIMILAR)

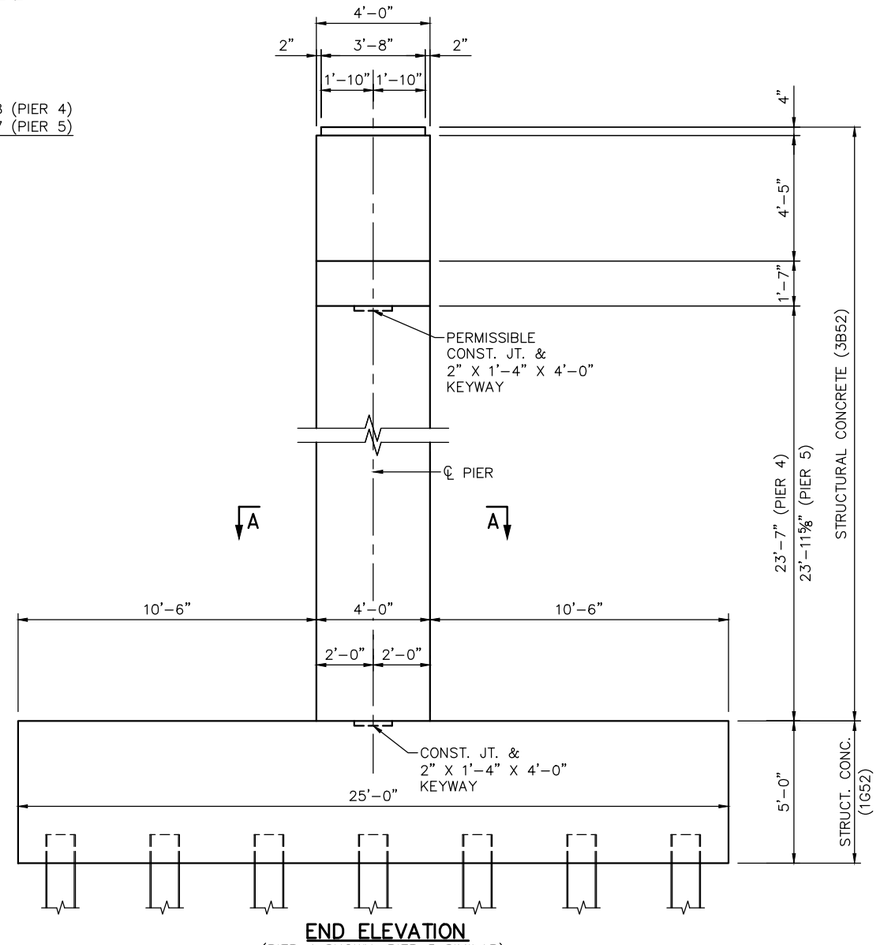

END ELEVATION
(PIER 4 SHOWN, PIER 5 SIMILAR)

NO.	DATE	BY	CHECK	DESIGN	REVISION / SUBMITTAL

DESIGNED BY: RHK | CHECKED BY: JBW
DRAWN BY: LMT | CHECKED BY: EJT

AECOM Kimley»Horn

90% SUBMISSION - 01/22/16

METROPOLITAN COUNCIL

SOUTHWEST Green Line LRT Extension

CIVIL - VOLUME 4G
LRT OVER BNSF
BRIDGE BRIDGE R0697
PIER 4 AND 5 DETAILS 3

DISCIPLINE: STRUCTURES
SHEET NAME: CBRR0697-BRG-PIR-001-7

SHEET 35 OF 118

Jan. 18 2016 01:39 pm V:\3400_ADC\CAD\SEGMENT E4\PLAN SHEETS\STRUCTURES\R0697\CBRR0697-BRG-PIR-001.dwg By: lisa.thompson

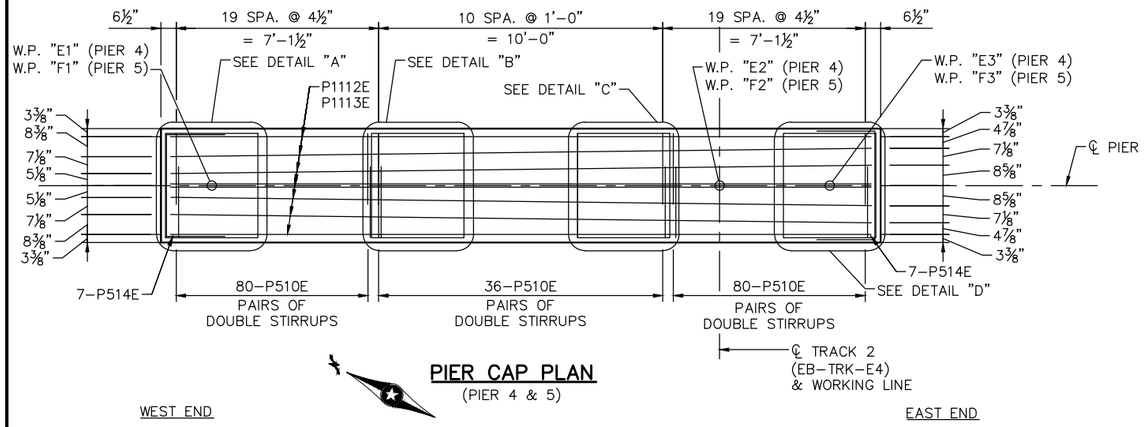

PIER CAP PLAN
(PIER 4 & 5)

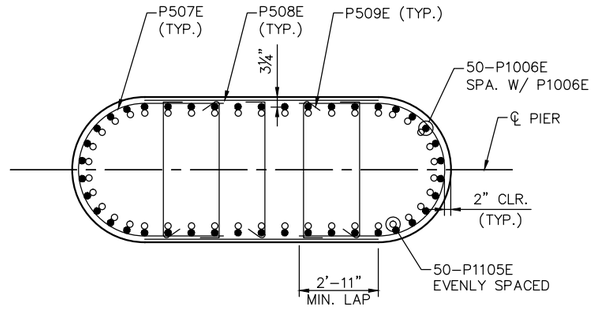

SECTION A-A
(PIER 4 & 5)

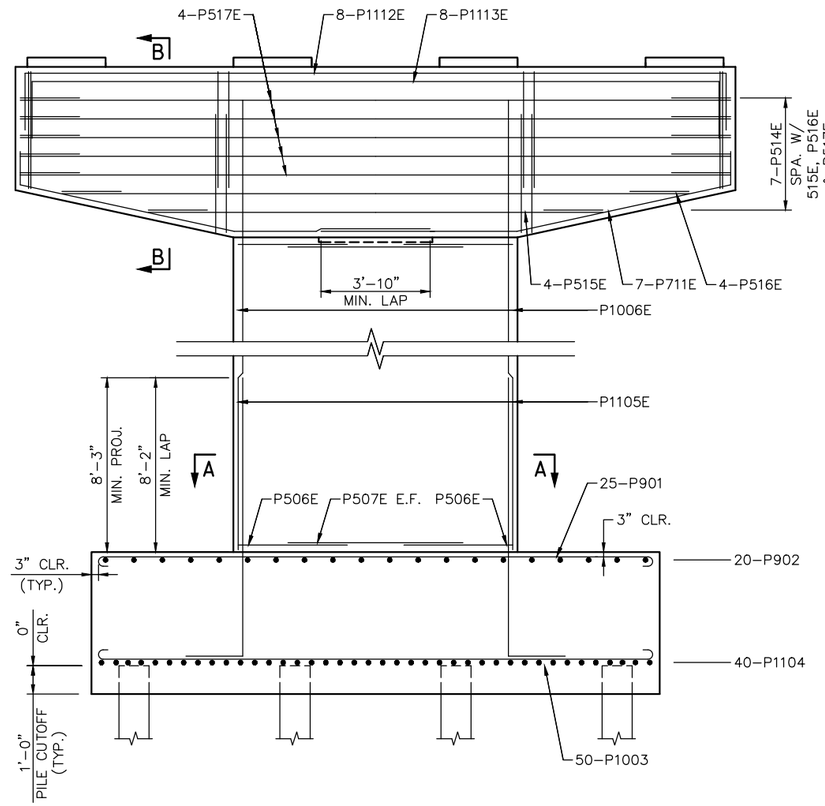

ELEVATION
(PIER 4 SHOWN, PIER 5 SIMILAR)

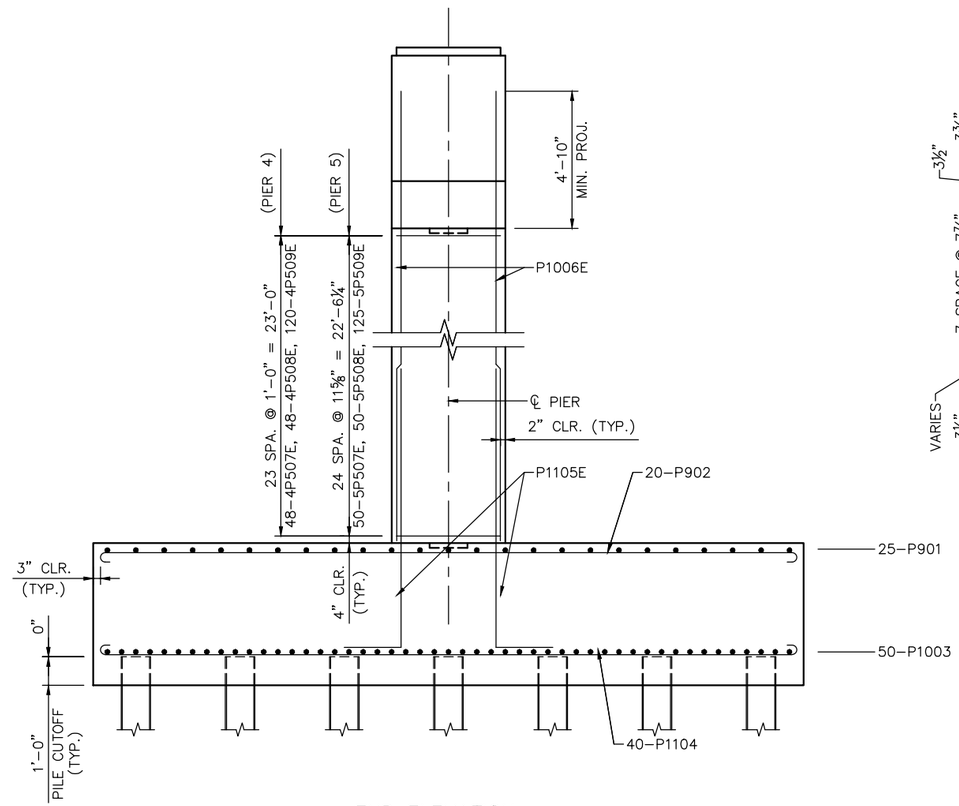

END ELEVATION
(PIER 4 SHOWN, PIER 5 SIMILAR)

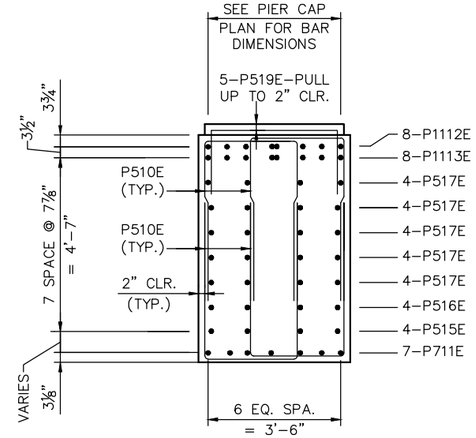

SECTION B-B
(PIER 4 & 5)

NOTES:

SEE SHEET 37 FOR BEAM SEAT DETAILS.

1. DIMENSIONS MEASURED ALONG ℄ OF BEAM @ W.P. "E1" (PIER 4) AND W.P. "F1" (PIER 5).
2. DIMENSIONS MEASURED ALONG ℄ OF BEAM @ W.P. "E3" (PIER 4) AND W.P. "F3" (PIER 5).
3. DIMENSIONS MEASURED ALONG ℄ OF PIER.

NO.	DATE	BY	CHECK	DESIGN	REVISION / SUBMITTAL

DESIGNED BY: RHK | CHECKED BY: JBW
DRAWN BY: LMT | CHECKED BY: EJT

AECOM Kimley»Horn

90% SUBMISSION - 01/22/16

METROPOLITAN COUNCIL

SOUTHWEST Green Line LRT Extension

CIVIL - VOLUME 4G
LRT OVER BNSF
BRIDGE BRIDGE R0697
PIER 4 AND 5 REINFORCEMENT 1

DISCIPLINE: STRUCTURES
SHEET NAME: CBRR0697-BRG-PIR-001-8

SHEET 36 OF 118

Jan. 18 2016 01:39 pm V:\3400_ADC\CAD\SEGMENT E4\PLAN SHEETS\STRUCTURES\R0697\CBRR0697-BRG-PIR-001.dwg By: lisa.thompson

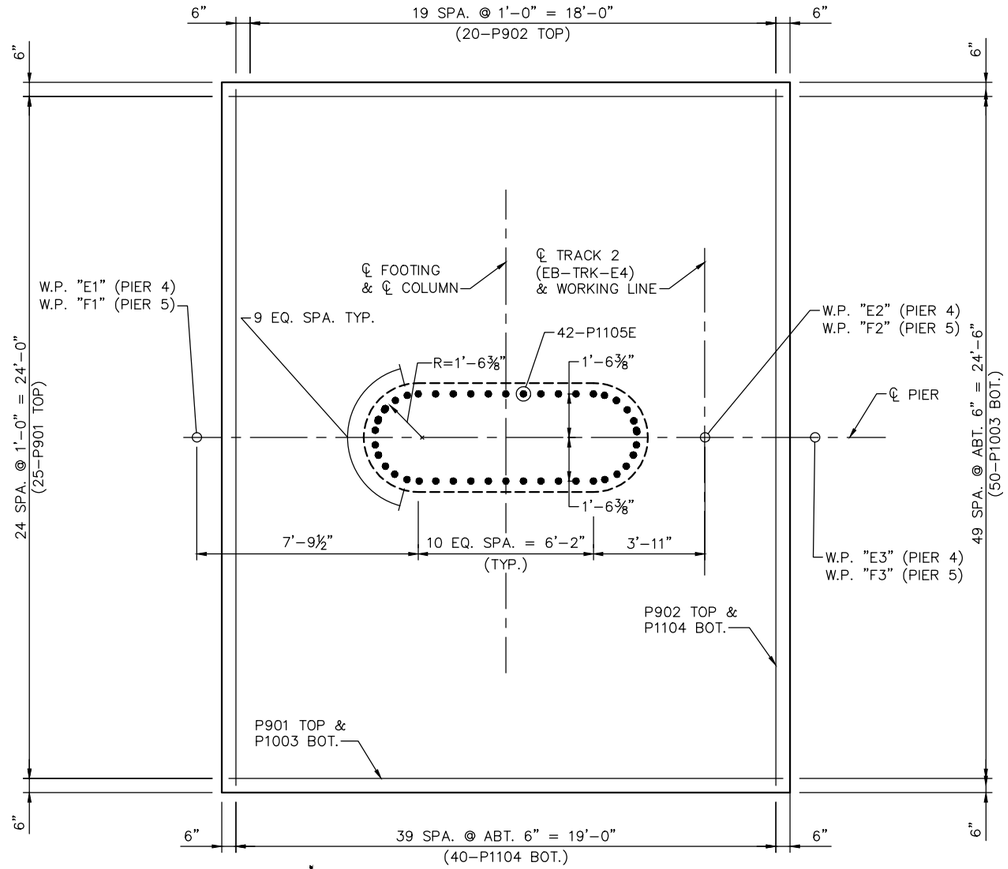

FOOTING PLAN
(PIER 4 & 5)

BILL OF REINFORCEMENT FOR PIER 4				
BAR	NO.	LENGTH	SHAPE	LOCATION
4P901	25	22'-0"	BENT	FOOTING, TRANS. TOP
4P902	20	27'-0"	BENT	FOOTING LONG. TOP
4P1003	50	22'-4"	BENT	FOOTING TRANS. BOT.
4P1104	40	27'-8"	BENT	FOOTING LONG. BOT.
4P1105E	50	14'-4"	BENT	FOOTING DOWELS
4P1006E	50	28'-5"	STR.	COLUMN VERTS
4P507E	48	9'-11"	STR.	COLUMN TIES
4P508E	48	6'-0"	BENT	COLUMN TIES
4P509E	120	4'-8"	BENT	COLUMN TIES
4P510E	192	10'-10"	BENT	CAP STIRRUPS
4P711E	14	15'-9"	BENT	CAP LONG. BOT.
4P1112E	8	28'-8"	BENT	CAP LONG. TOP (TOP)
4P1113E	8	28'-2"	BENT	CAP LONG. TOP (BOT.)
4P514E	10	7'-8"	BENT	CAP END TIES
4P515E	4	17'-8"	STR.	CAP T&S BOT.
4P516E	4	24'-4"	STR.	CAP T&S BOT.
4P517E	20	25'-0"	STR.	CAP T&S
4P518E	32	5'-7"	BENT	PEDESTAL TIES
4P519E	20	6'-2"	BENT	PEDESTAL TIES

BILL OF REINFORCEMENT FOR PIER 5				
BAR	NO.	LENGTH	SHAPE	LOCATION
5P901	25	22'-0"	BENT	FOOTING, TRANS. TOP
5P902	20	27'-0"	BENT	FOOTING LONG. TOP
5P1003	50	22'-4"	BENT	FOOTING TRANS. BOT.
5P1104	40	27'-8"	BENT	FOOTING LONG. BOT.
5P1105E	50	14'-4"	BENT	FOOTING DOWELS
5P1006E	50	28'-10"	STR.	COLUMN VERTS
5P507E	48	9'-11"	STR.	COLUMN TIES
5P508E	48	6'-0"	BENT	COLUMN TIES
5P509E	120	4'-8"	BENT	COLUMN TIES
5P510E	196	10'-10"	BENT	CAP STIRRUPS
5P711E	14	15'-9"	BENT	CAP LONG. BOT.
5P1112E	8	28'-8"	BENT	CAP LONG. TOP (TOP)
5P1113E	8	28'-2"	BENT	CAP LONG. TOP (BOT.)
5P514E	10	7'-8"	BENT	CAP END TIES
5P515E	4	17'-8"	STR.	CAP T&S BOT.
5P516E	4	24'-4"	STR.	CAP T&S BOT.
5P517E	20	25'-0"	STR.	CAP T&S
5P518E	32	5'-7"	BENT	PEDESTAL TIES
5P519E	20	6'-2"	BENT	PEDESTAL TIES

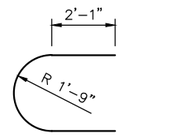

P507E

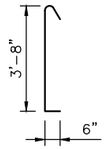

P509E

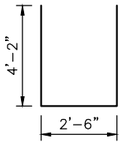

P510E



P1105E

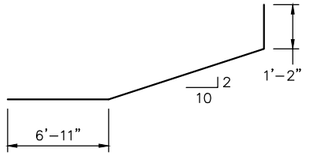

P711E

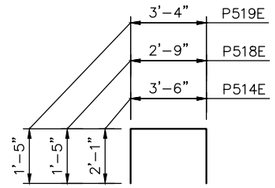

P514E, P518E, P519E

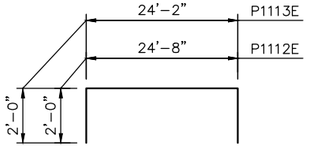

P1112E, P1113E

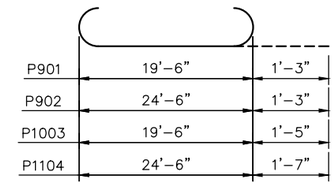

P901, P902, P1003, P1104

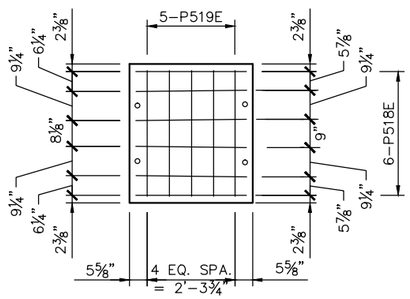

DETAIL A
(PIER 4 & 5)

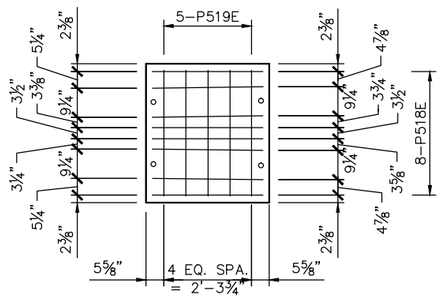

DETAIL B
(PIER 4 & 5)

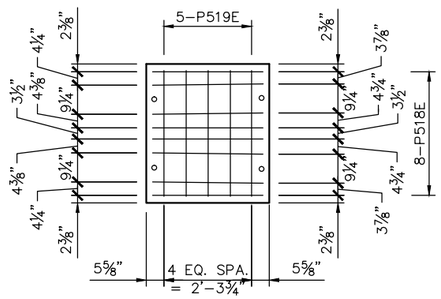

DETAIL C
(PIER 4 & 5)

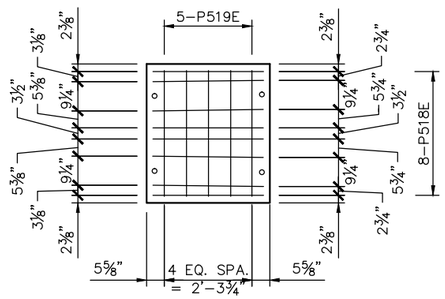

DETAIL D
(PIER 4 & 5)

NO.	DATE	BY	CHECK	DESIGN	REVISION / SUBMITTAL

DESIGNED BY: RHK | CHECKED BY: JBW
DRAWN BY: LMT | CHECKED BY: EJT

AECOM Kimley»Horn

90% SUBMISSION - 01/22/16

METROPOLITAN COUNCIL

SOUTHWEST Green Line LRT Extension

CIVIL - VOLUME 4G
LRT OVER BNSF
BRIDGE BRIDGE R0697
PIER 4 AND 5 REINFORCEMENT 2

DISCIPLINE: STRUCTURES

SHEET NAME: CBRR0697-BRG-PIR-001-9

SHEET 37 OF 118

Jan, 18 2016 01:39 pm V:\3400_ADC\CAD\SEGMENT E4\PLAN SHEETS\STRUCTURES\R0697\CBRR0697-BRG-PIR-001.dwg By: lisa.thompson

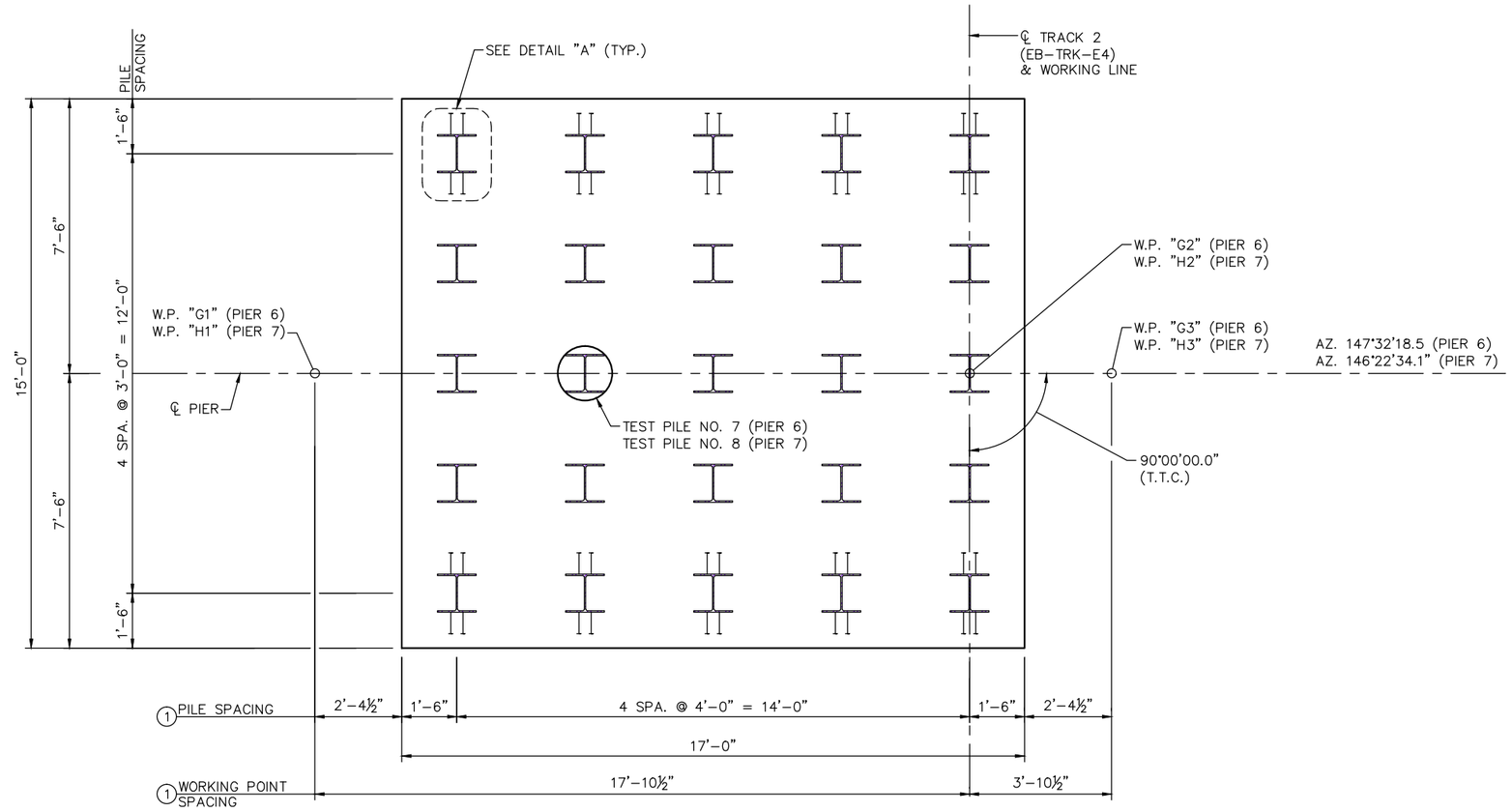

WEST END

FOOTING PLAN
(PIER 6 & 7)

EAST END

PIER 6 & 7 COMPUTED PILE LOAD - TONS/PILE	
FACTORED DEAD LOAD	40.4
FACTORED LIVE LOAD	6.0
FACTORED OVERTURNING	48.5
* FACTORED DESIGN LOAD	94.9

* BASED ON STRENGTH V LOAD COMBINATION.

PIER 6 & 7 REQUIRED NOMINAL PILE BEARING RESISTANCE FOR H-PILES Rn - TONS/PILE		
FIELD CONTROL METHOD	φdyn	* Rn
MN/DOT PILE FORMULA 2012 (MPF12) $R_n = 20\sqrt{\frac{W\,x\,H}{1000}}\,x\log\left(\frac{10}{S}\right)$	0.60	159

* Rn = (FACTORED DESIGN LOAD) / φdyn

GENERAL PILE NOTES (PIER 6)

1 STEEL HP12x53–TEST PILES 45 FT. LONG
23 STEEL HP12x53–PILES EST. LENGTH 45 FT.
24 STEEL HP12x53–PILES REQ'D FOR PIER 6

GENERAL PILE NOTES (PIER 7)

1 STEEL HP12x53–TEST PILES 45 FT. LONG
23 STEEL HP12x53–PILES EST. LENGTH 45 FT.
24 STEEL HP12x53–PILES REQ'D FOR PIER 7

PILE NOTES:

PIER PILES ARE TO BE HP12x53 WITH PILE TIP PROTECTION.

PILE SPACING SHOWN IS AT BOTTOM OF FOOTING.

FOR PILE SPLICE DETAILS SEE DETAIL B202.

NOTES:

SEE SHEET 29 FOR DETAIL "A".

(1) DIMENSIONS MEASURED ALONG ℄ OF PIER.

NO.	DATE	BY	CHECK	DESIGN	REVISION / SUBMITTAL

DESIGNED BY: RHK | CHECKED BY: JBW
DRAWN BY: LMT | CHECKED BY: EJT

AECOM Kimley»Horn

90% SUBMISSION - 01/22/16

METROPOLITAN COUNCIL

SOUTHWEST Green Line LRT Extension

CIVIL - VOLUME 4G
LRT OVER BNSF
BRIDGE R0697
PIER 6 AND 7 DETAILS 1

DISCIPLINE: STRUCTURES
SHEET NAME: CBRR0697-BRG-PIR-001-10

SHEET 38 OF 118

Jan, 18 2016 01:39 pm V:\3400_ADC\CAD\SEGMENT E4\PLAN SHEETS\STRUCTURES\R0697\CBRR0697-BRG-PIR-001.dwg By: lisa.thompson

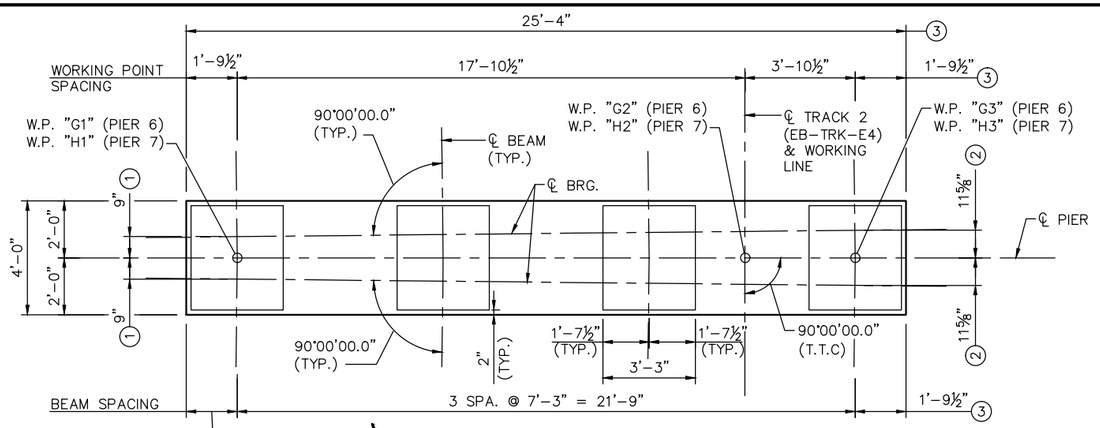

PIER CAP PLAN
(PIER 6 & 7)

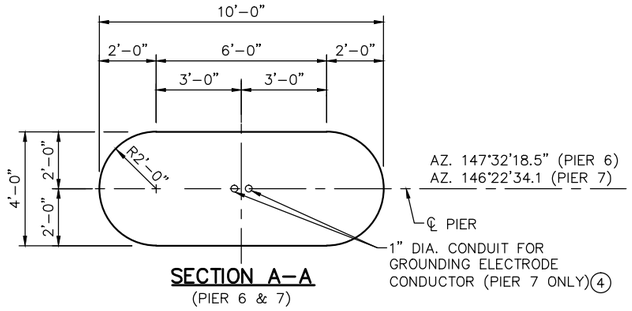

SECTION A-A
(PIER 6 & 7)

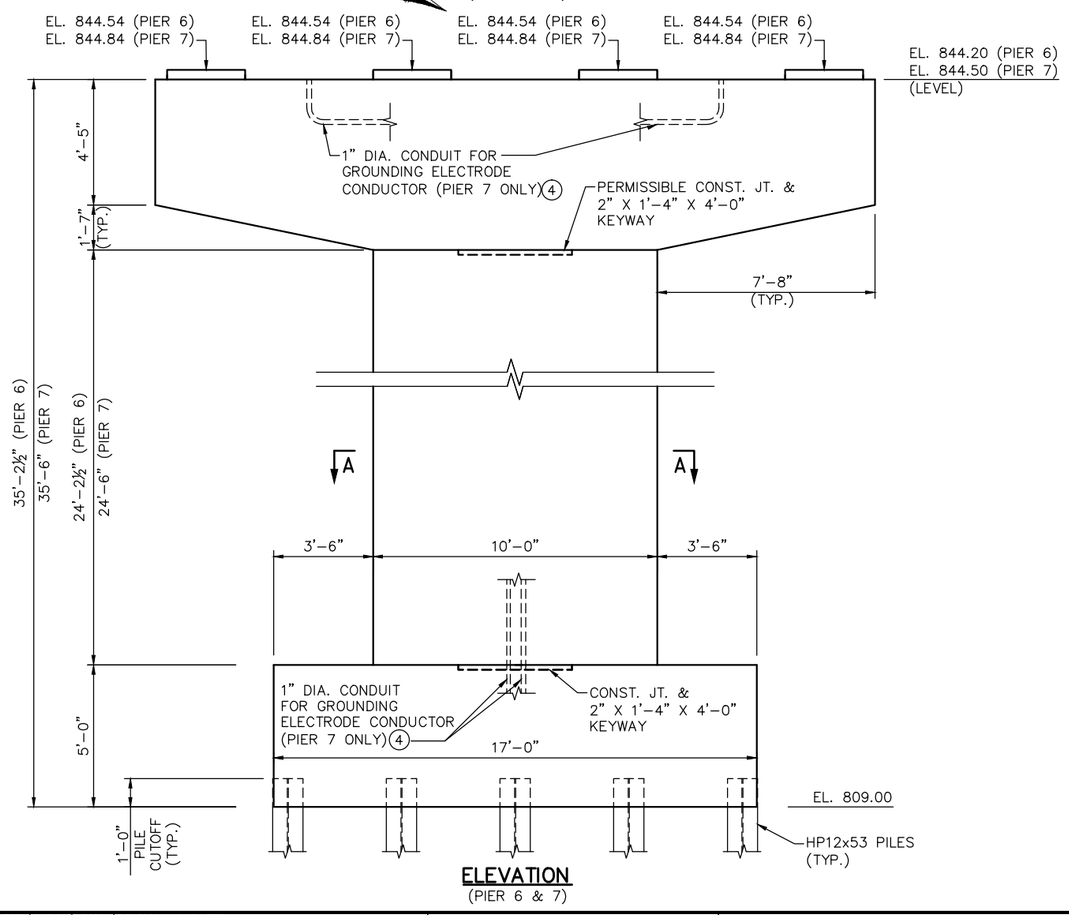

ELEVATION
(PIER 6 & 7)

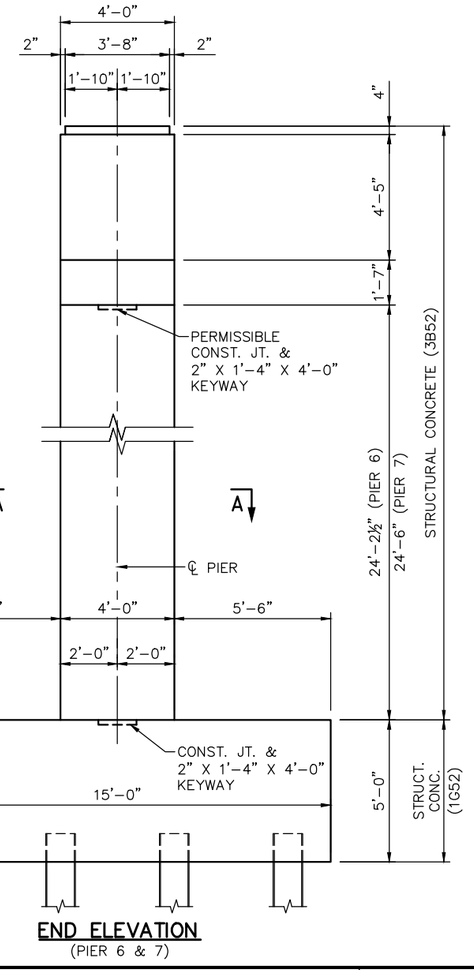

END ELEVATION
(PIER 6 & 7)

NOTES:

1. DIMENSIONS MEASURED ALONG ℄ OF BEAM @ W.P. "G1" (PIER 6) AND W.P. "H1" (PIER 7).
2. DIMENSIONS MEASURED ALONG ℄ OF BEAM @ W.P. "G3" (PIER 6) AND W.P. "H3" (PIER 7).
3. DIMENSIONS MEASURED ALONG ℄ OF PIER.
4. GROUNDING SYSTEM, SEE SYSTEM WIDE ELECTRICAL FOR DETAILS.

NO.	DATE	BY	CHECK	DESIGN	REVISION / SUBMITTAL

DESIGNED BY: RHK | CHECKED BY: JBW
DRAWN BY: LMT | CHECKED BY: EJT

AECOM Kimley»Horn

90% SUBMISSION - 01/22/16

METROPOLITAN COUNCIL

SOUTHWEST Green Line LRT Extension

CIVIL - VOLUME 4G
LRT OVER BNSF
BRIDGE R0697
PIER 6 & 7 DETAILS 2

DISCIPLINE: STRUCTURES
SHEET NAME: CBRR0697-BRG-PIR-001-11

SHEET 39 OF 118

Jan, 18 2016 01:39 pm V:\3400_ADC\CAD\SEGMENT E4\PLAN SHEETS\STRUCTURES\R0697\CBRR0697-BRG-PIR-001.dwg By: lisa.thompson

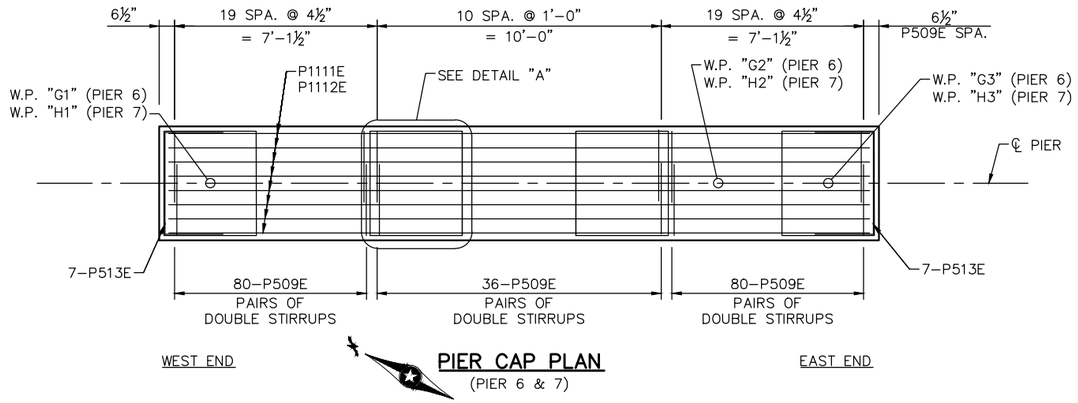

PIER CAP PLAN
(PIER 6 & 7)

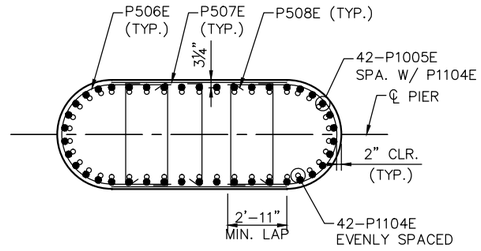

SECTION A–A
(PIER 6 & 7)

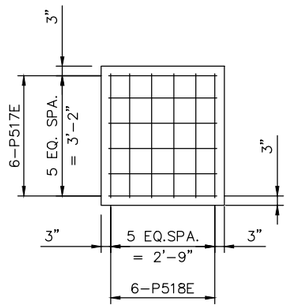

DETAIL A
(PIER 6 & 7)

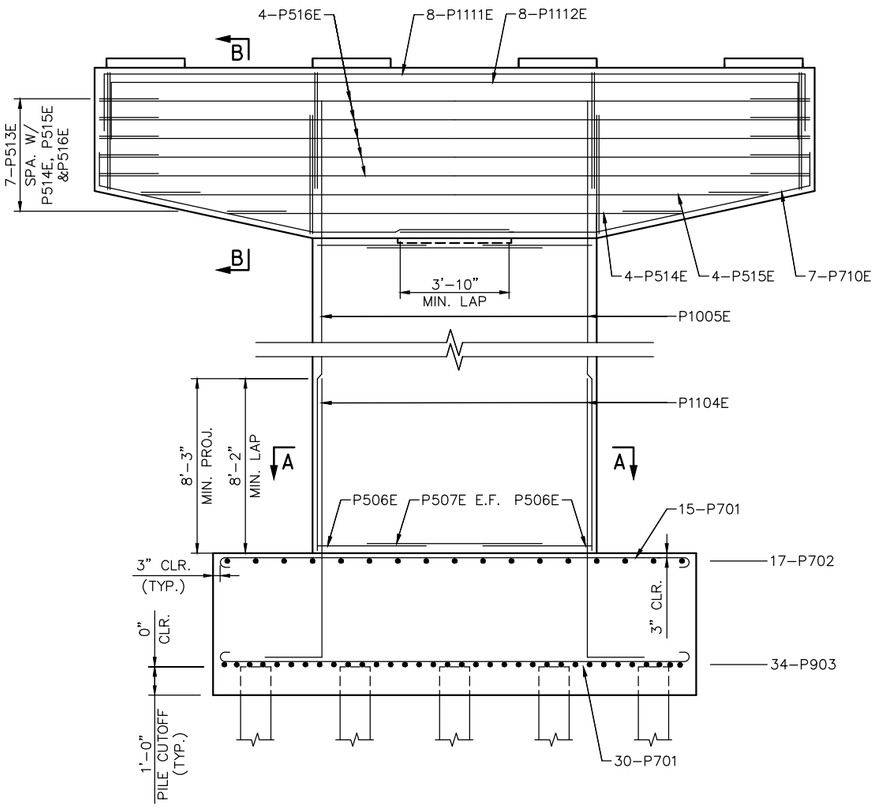

ELEVATION
(PIER 6 & 7)

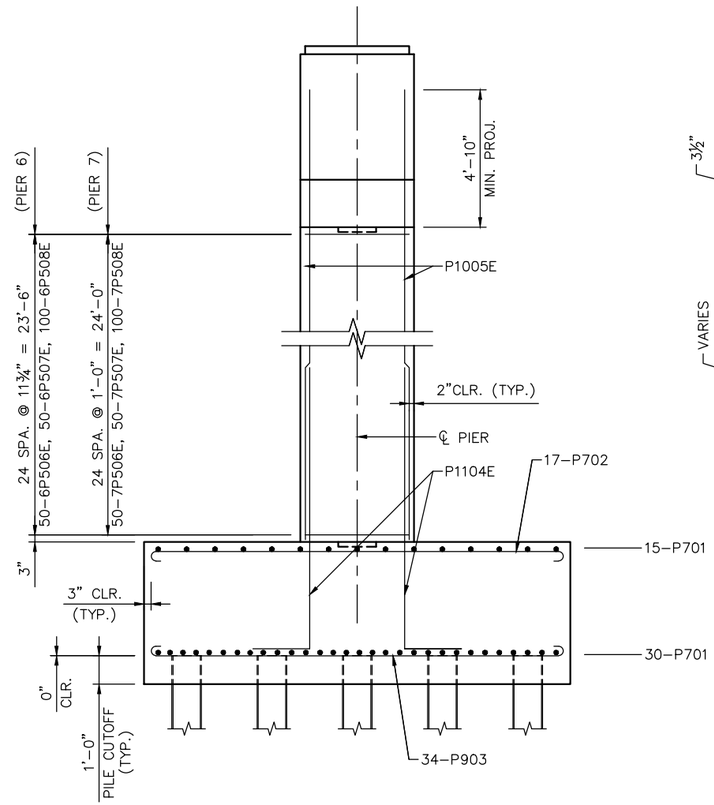

END ELEVATION
(PIER 6 & 7)

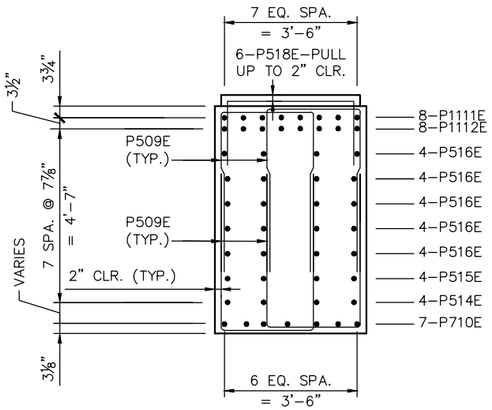

SECTION B–B
(PIER 6 & 7)

NOTES:

1. DIMENSIONS MEASURED ALONG ℄ OF BEAM @ W.P. "G1" (PIER 6) AND W.P. "H1" (PIER 7).
2. DIMENSIONS MEASURED ALONG ℄ OF BEAM @ W.P. "G3" (PIER 6) AND W.P. "H3" (PIER 7).
3. DIMENSIONS MEASURED ALONG ℄ OF PIER.

NO.	DATE	BY	CHECK	DESIGN	REVISION / SUBMITTAL

DESIGNED BY: RHK | CHECKED BY: JBW
DRAWN BY: LMT | CHECKED BY: EJT

AECOM Kimley»Horn

90% SUBMISSION - 01/22/16

METROPOLITAN COUNCIL

SOUTHWEST Green Line LRT Extension

CIVIL - VOLUME 4G
LRT OVER BNSF
BRIDGE R0697
PIER 6 & 7 REINFORCEMENT 1

DISCIPLINE: STRUCTURES

SHEET NAME: CBRR0697-BRG-PIR-001-12

SHEET 40 OF 118

Jan, 18 2016 01:40 pm V:\3400_ADC\CAD\SEGMENT E4\PLAN SHEETS\STRUCTURES\R0697\CBRR0697-BRG-PIR-001.dwg By: lisa.thompson

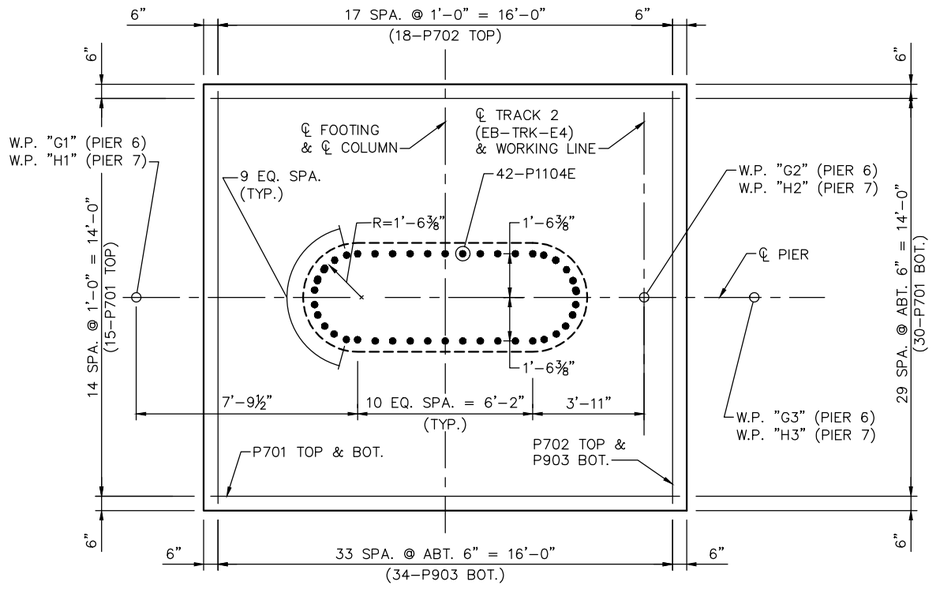

FOOTING PLAN
(PIER 6 & 7)

BILL OF REINFORCEMENT FOR PIER 6				
BAR	NO.	LENGTH	SHAPE	LOCATION
6P701	45	18'-2"	BENT	FOOTING, TRANS. TOP & BOT.
6P702	17	16'-2"	BENT	FOOTING LONG. TOP
6P903	34	17'-0"	BENT	FOOTING LONG. BOT
6P1104E	42	14'-4"	BENT	FOOTING DOWELS
6P1005E	42	29'-1"	STR.	COLUMN VERTS
6P506E	50	9'-11"	BENT	COLUMN TIES
6P507E	50	6'-0"	STR.	COLUMN TIES
6P508E	125	4'-8"	BENT	COLUMN TIES
6P509E	196	10'-10"	BENT	CAP STIRRUPS
6P710E	14	15'-9"	BENT	CAP LONG. BOT.
6P1111E	8	28'-8"	BENT	CAP LONG. TOP (TOP)
6P1112E	8	28'-2"	BENT	CAP LONG. TOP (BOT.)
6P513E	10	7'-8"	BENT	CAP END TIES
6P514E	4	17'-8"	STR.	CAP T&S BOT.
6P515E	4	24'-4"	STR.	CAP T&S BOT.
6P516E	20	25'-0"	STR.	CAP T&S
6P517E	24	5'-7"	BENT	PEDESTAL TIES
6P518E	24	6'-2"	BENT	PEDESTAL TIES

BILL OF REINFORCEMENT FOR PIER 7				
BAR	NO.	LENGTH	SHAPE	LOCATION
7P701	45	18'-2"	BENT	FOOTING, TRANS. TOP & BOT.
7P702	17	16'-2"	BENT	FOOTING LONG. TOP
7P903	34	17'-0"	BENT	FOOTING LONG. BOT
7P1104E	42	14'-4"	BENT	FOOTING DOWELS
7P1005E	42	29'-4"	STR.	COLUMN VERTS
7P506E	50	9'-11"	BENT	COLUMN TIES
7P507E	50	6'-0"	STR.	COLUMN TIES
7P508E	125	4'-8"	BENT	COLUMN TIES
7P509E	192	10'-10"	BENT	CAP STIRRUPS
7P710E	14	15'-9"	BENT	CAP LONG. BOT.
7P1111E	8	28'-8"	BENT	CAP LONG. TOP (TOP)
7P1112E	8	28'-2"	BENT	CAP LONG. TOP (BOT.)
7P513E	10	7'-8"	BENT	CAP END TIES
7P514E	4	17'-8"	STR.	CAP T&S BOT.
7P515E	4	24'-4"	STR.	CAP T&S BOT.
7P516E	20	25'-0"	STR.	CAP T&S
7P517E	24	5'-7"	BENT	PEDESTAL TIES
7P518E	24	6'-2"	BENT	PEDESTAL TIES

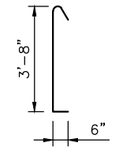

P508E

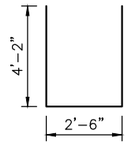

P509E

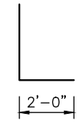

P1104E

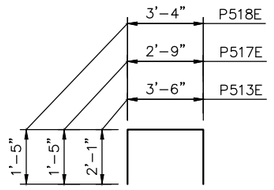

P513E, P517E, P518E

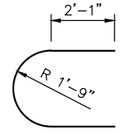

P506E

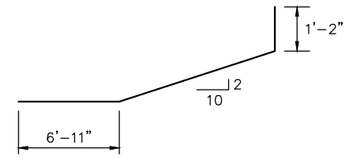

P710E

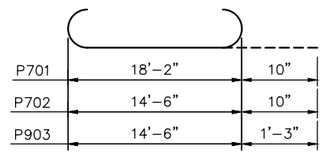

P701, P702, P903

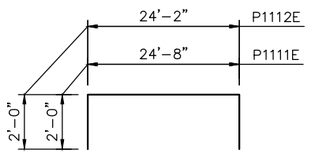

P1111E, P1112E

NO.	DATE	BY	CHECK	DESIGN	REVISION / SUBMITTAL

DESIGNED BY: RHK | CHECKED BY: JBW
DRAWN BY: LMT | CHECKED BY: EJT

AECOM Kimley»Horn

90% SUBMISSION - 01/22/16

METROPOLITAN COUNCIL

SOUTHWEST Green Line LRT Extension

CIVIL - VOLUME 4G
LRT OVER BNSF
BRIDGE R0697
PIER 6 & 7 REINFORCEMENT 2

DISCIPLINE: STRUCTURES
SHEET NAME: CBRR0697-BRG-PIR-001-11

SHEET 41 OF 118

Jan. 18 2016 01:40 pm V:\3400_ADC\CAD\SEGMENT E4\PLAN SHEETS\STRUCTURES\R0697\CBRR0697-BRG-PIR-001.dwg By: lisa.thompson

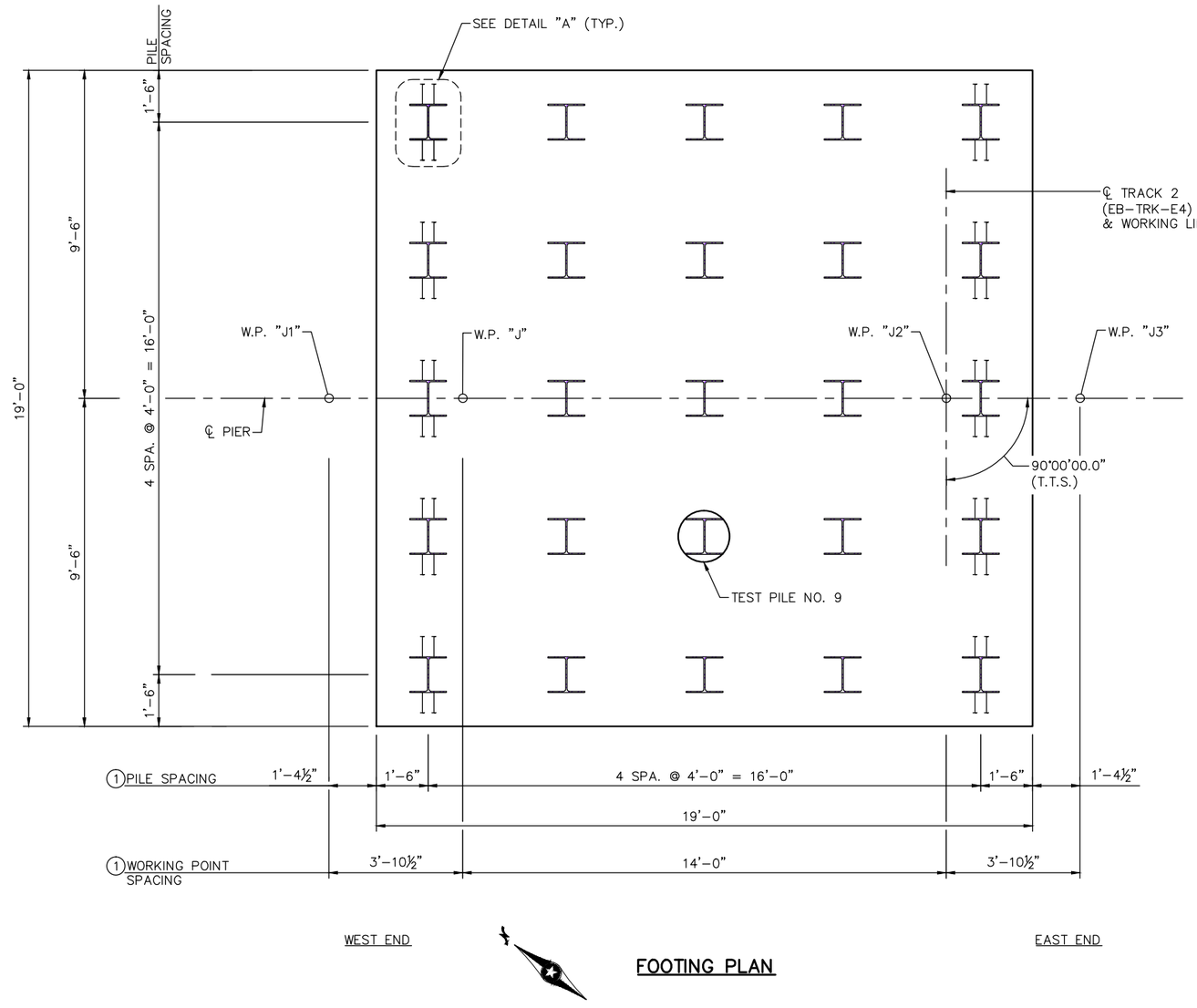

FOOTING PLAN

PIER 8 COMPUTED PILE LOAD - TONS/PILE	
FACTORED DEAD LOAD	35.1
FACTORED LIVE LOAD	5.6
FACTORED OVERTURNING	35.7
* FACTORED DESIGN LOAD	76.4

* BASED ON STRENGTH V LOAD COMBINATION.

PIER 8 REQUIRED NOMINAL PILE BEARING RESISTANCE FOR H-PILES Rn - TONS/PILE		
FIELD CONTROL METHOD	φdyn	* Rn
MN/DOT PILE FORMULA 2012 (MPF12) $R_n = 20\sqrt{\frac{W\,x\,H}{1000}} x log\left(\frac{10}{S}\right)$	0.60	128

* Rn = (FACTORED DESIGN LOAD) / φdyn

GENERAL PILE NOTES

1 STEEL HP12x53–TEST PILES 50 FT. LONG
15 STEEL HP12x53–PILES EST. LENGTH 50 FT.
16 STEEL HP12x53–PILES REQ'D FOR PIER 8

PIER PILES ARE TO BE HP12x53 WITH PILE TIP PROTECTION.

PILE SPACING SHOWN IS AT BOTTOM OF FOOTING.

FOR PILE SPLICE DETAILS SEE DETAIL B202.

NOTES:

SEE SHEET 29 FOR DETAIL "A".

① DIMENSIONS MEASURED ALONG ℄ OF PIER.

NO.	DATE	BY	CHECK	DESIGN	REVISION / SUBMITTAL

DESIGNED BY: RHK CHECKED BY: JBW
DRAWN BY: LMT CHECKED BY: EJT

AECOM Kimley»Horn

90% SUBMISSION - 01/22/16

METROPOLITAN COUNCIL

SOUTHWEST Green Line LRT Extension

CIVIL - VOLUME 4G
LRT OVER BNSF
BRIDGE R0697
PIER 8 DETAILS 1

DISCIPLINE: STRUCTURES
SHEET NAME: CBRR0697-BRG-PIR-001-12

SHEET 42 OF 118

Jan, 18 2016 01:40 pm V:\3400_ADC\CAD\SEGMENT E4\PLAN SHEETS\STRUCTURES\R0697\CBRR0697-BRG-PIR-001.dwg By: lisa.thompson

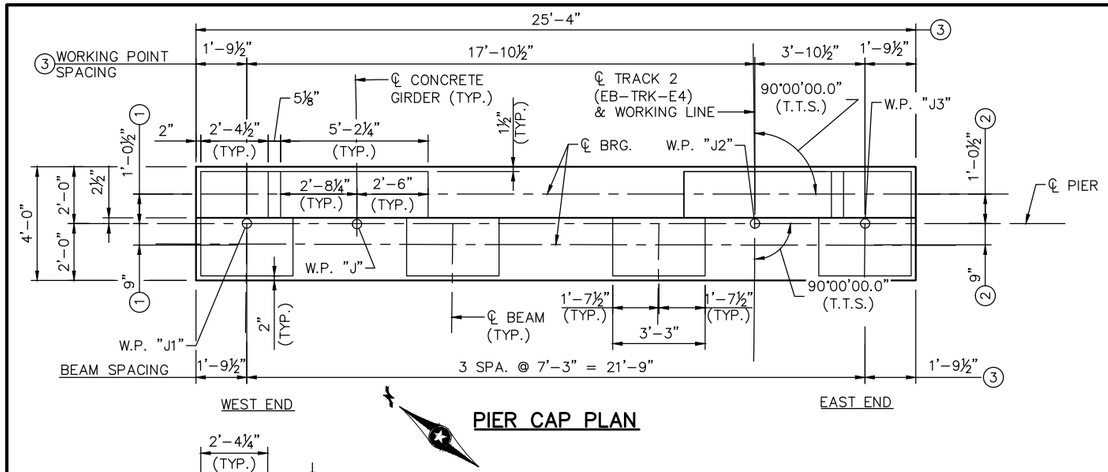

PIER CAP PLAN

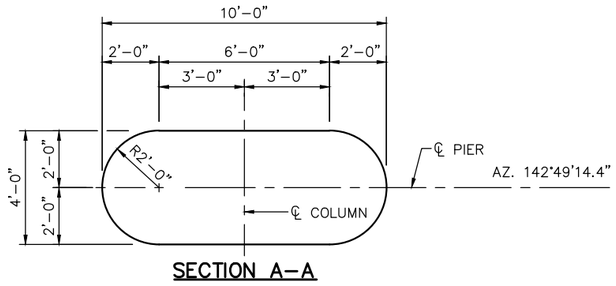

SECTION A-A

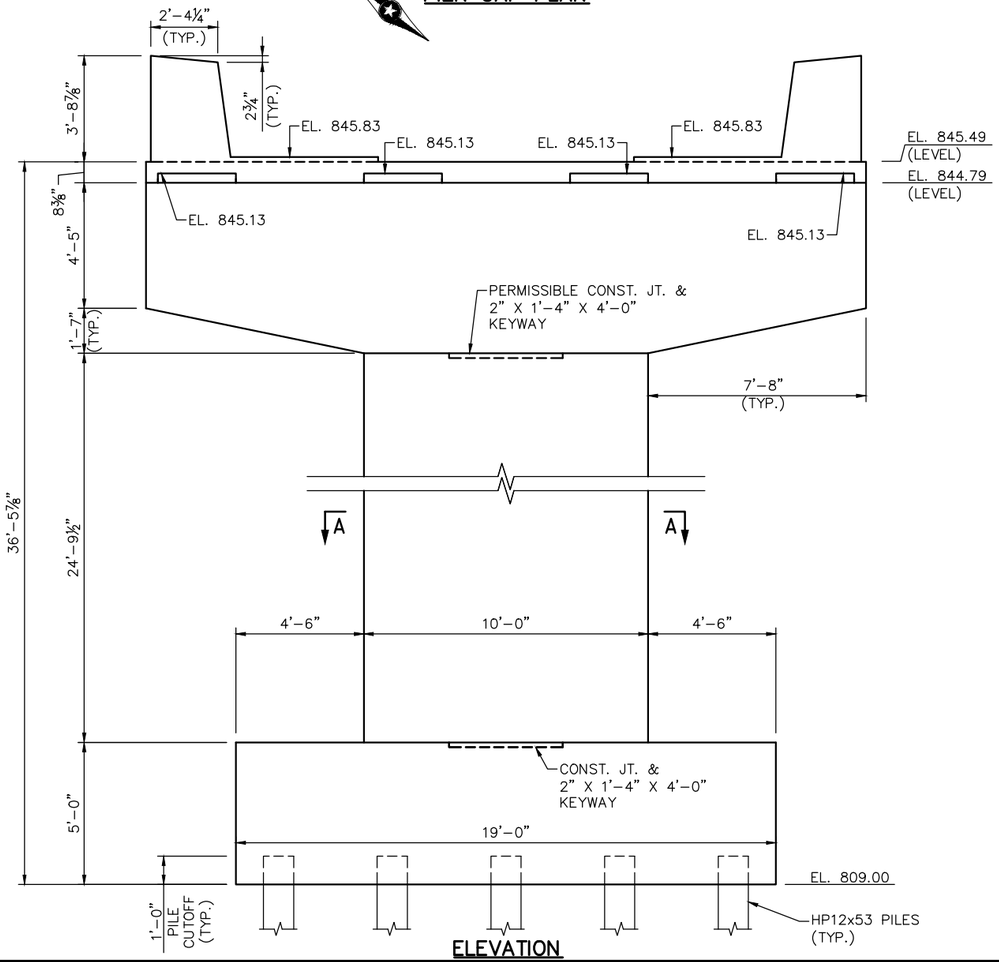

ELEVATION

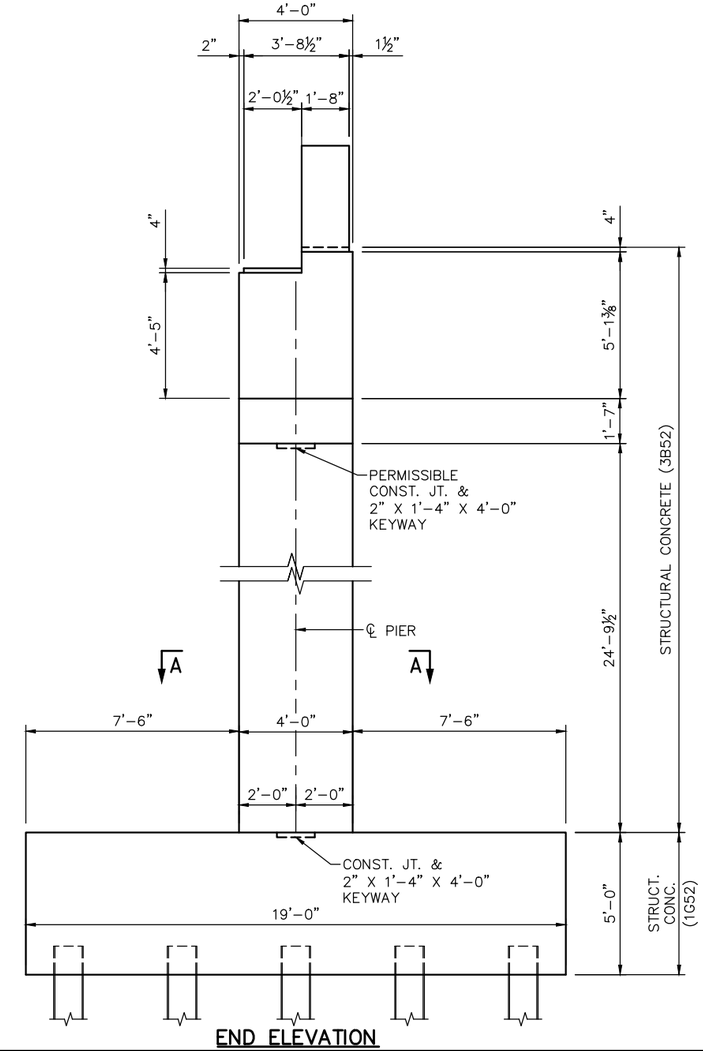

END ELEVATION

NOTES:

1. DIMENSIONS MEASURED ALONG ℄ OF BEAM @ W.P. "J1" (PIER 8).
2. DIMENSIONS MEASURED ALONG ℄ OF BEAM @ W.P. "J3" (PIER 8).
3. DIMENSIONS MEASURED ALONG ℄ OF PIER.

NO.	DATE	BY	CHECK	DESIGN	REVISION / SUBMITTAL

DESIGNED BY: RHK | CHECKED BY: JBW
DRAWN BY: LMT | CHECKED BY: EJT

AECOM Kimley»Horn

90% SUBMISSION - 01/22/16

METROPOLITAN COUNCIL

SOUTHWEST Green Line LRT Extension

CIVIL - VOLUME 4G
LRT OVER BNSF
BRIDGE R0697
PIER 8 DETAILS 2

DISCIPLINE: STRUCTURES
SHEET NAME: CBRR0697-BRG-PIR-001-13

SHEET 43 OF 118

Jan, 18 2016 01:40 pm V:\3400_ADC\CAD\SEGMENT E4\PLAN SHEETS\STRUCTURES\R0697\CBRR0697-BRG-PIR-001.dwg By: lisa.thompson

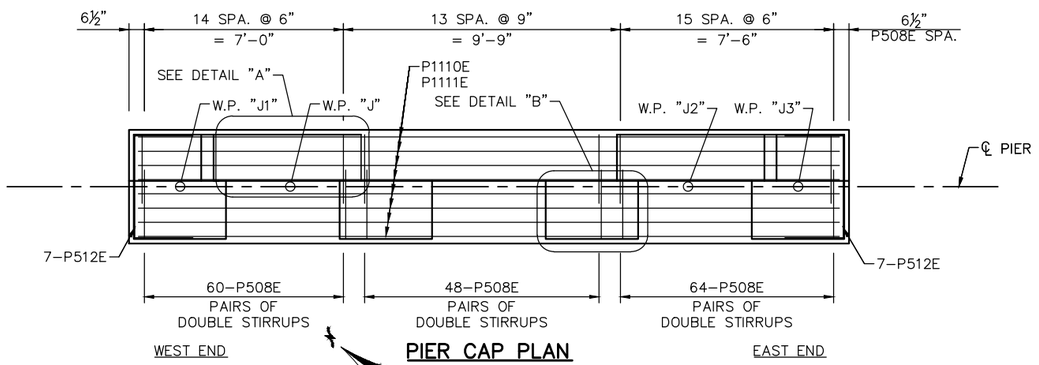

PIER CAP PLAN

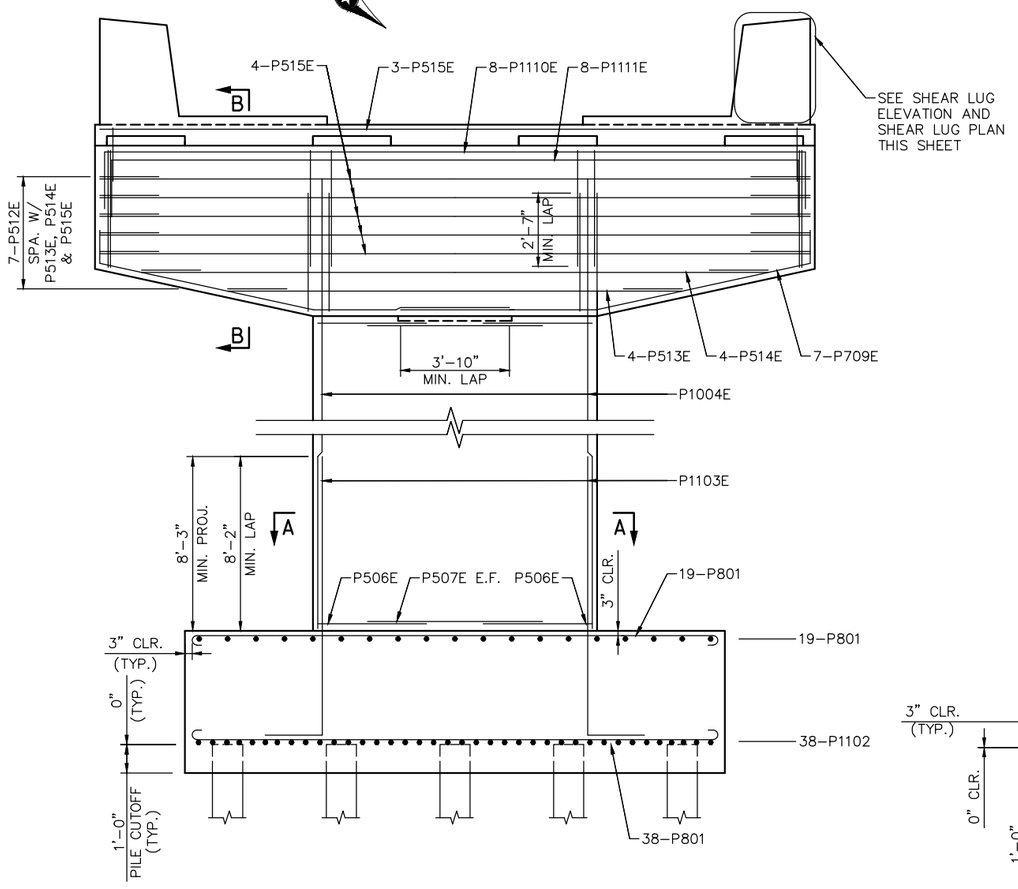

ELEVATION

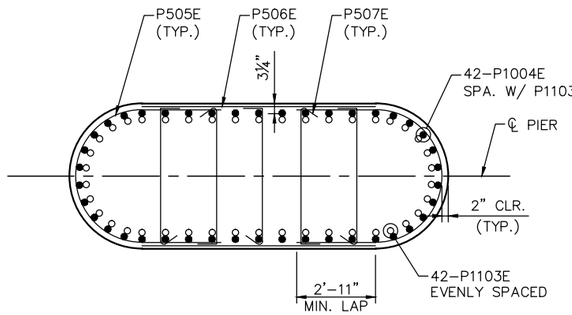

SECTION A-A

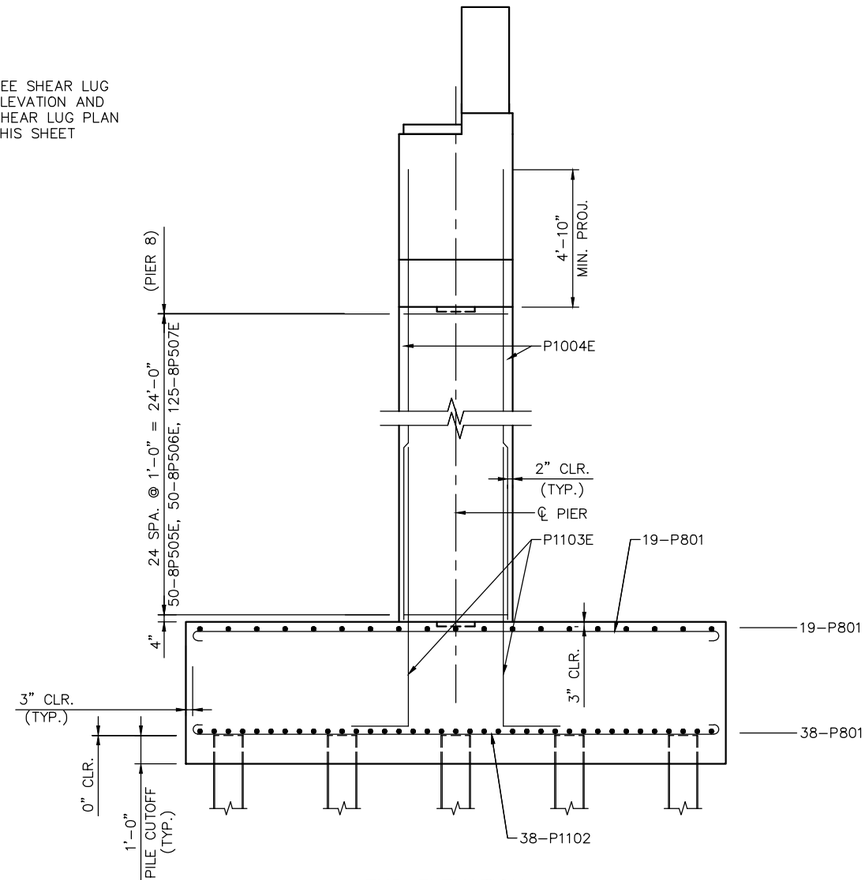

END ELEVATION

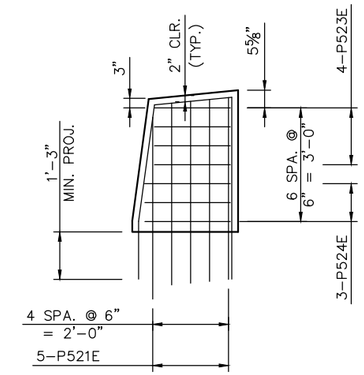

SHEAR LUG ELEVATION

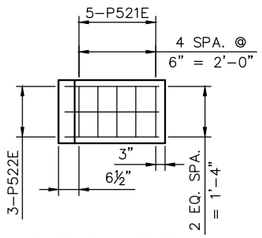

SHEAR LUG PLAN

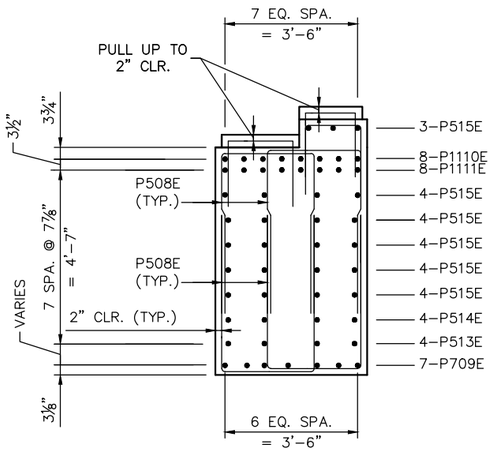

SECTION B-B

NOTES:

SEE SHEET 45 FOR DETAIL "A" AND DETAIL "B".

NO.	DATE	BY	CHECK	DESIGN	REVISION / SUBMITTAL

DESIGNED BY: RHK | CHECKED BY: JBW
DRAWN BY: LMT | CHECKED BY: EJT

AECOM Kimley»Horn

90% SUBMISSION - 01/22/16

METROPOLITAN COUNCIL

SOUTHWEST Green Line LRT Extension

CIVIL - VOLUME 4G
LRT OVER BNSF
BRIDGE R0697
PIER 8 REINFORCEMENT 1

DISCIPLINE: STRUCTURES

SHEET NAME: CBRR0697-BRG-PIR-001-14

SHEET 44 OF 118

Jan, 18 2016 01:40 pm V:\3400_ADC\CAD\SEGMENT E4\PLAN SHEETS\STRUCTURES\R0697\CBRR0697-BRG-PIR-001.dwg By: lisa.thompson

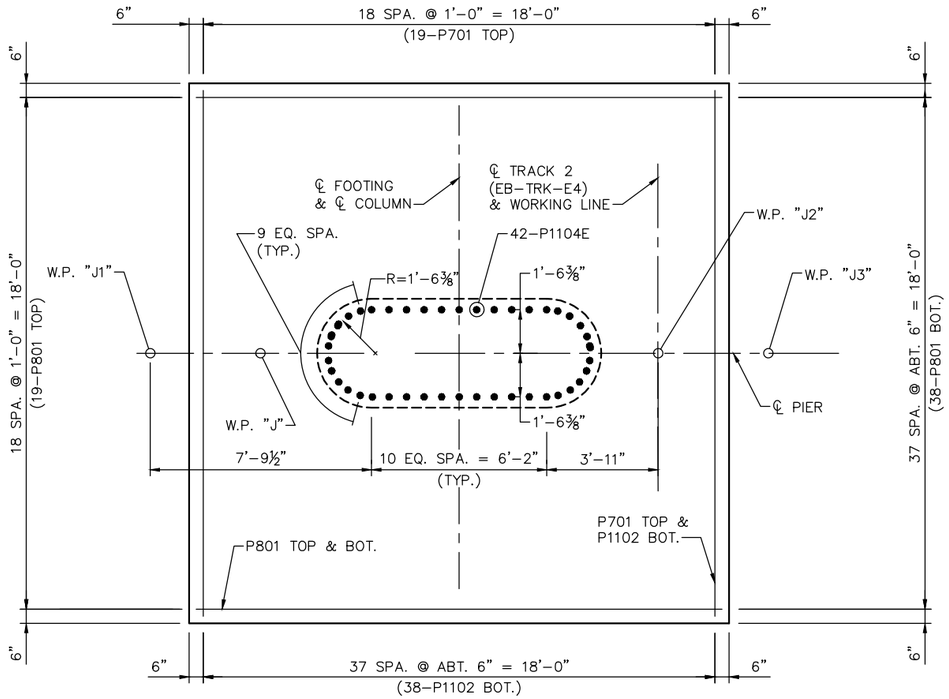

FOOTING PLAN

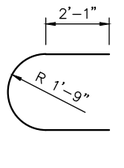

8P505E

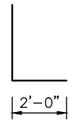

8P1103E

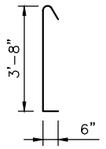

8P507E

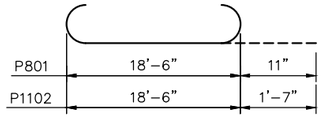

8P801, 8P1102

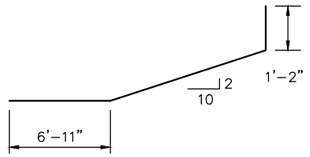

8P709E

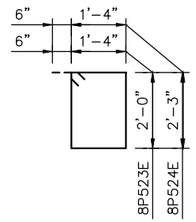

8P523E, 8P524E

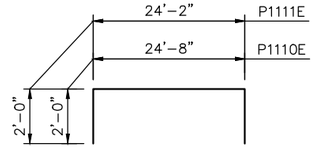

8P1101E, 8P1111E

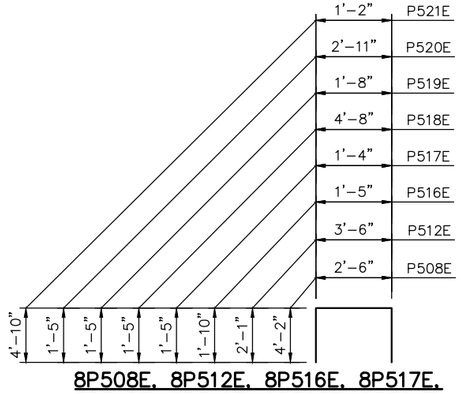

8P508E, 8P512E, 8P516E, 8P517E,
8P518E, 8P519E, 8P520E, 8P521E

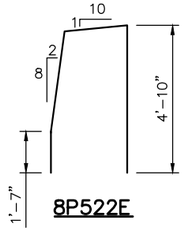

8P522E

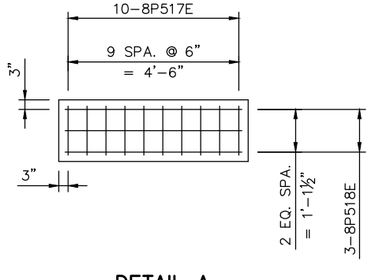

DETAIL A

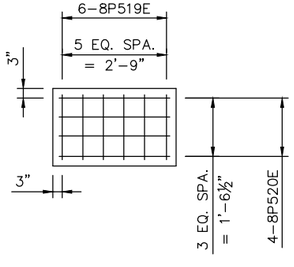

DETAIL B

BILL OF REINFORCEMENT FOR PIER 8				
BAR	NO.	LENGTH	SHAPE	LOCATION
8P801	76	20'-4"	BENT	FOOTING, TRANS.\LONG.
8P1102	38	21'-8"	BENT	FOOTING LONG. BOT.
8P1103E	42	14'-4"	BENT	FOOTING DOWELS
8P1004E	42	29'-8"	STR.	COLUMN VERTS
8P505E	52	9'-11"	BENT	COLUMN TIES
8P506E	52	6'-0"	STR.	COLUMN TIES
8P507E	130	4'-8"	BENT	COLUMN TIES
8P508E	172	10'-10"	BENT	CAP STIRRUPS
8P709E	14	15'-9"	BENT	CAP LONG. BOT.
8P1110E	8	28'-8"	BENT	CAP LONG. TOP (TOP)
8P1111E	8	28'-2"	BENT	CAP LONG. TOP (BOT.)
8P512E	10	5'-8"	BENT	CAP END TIES
8P513E	4	16'-10"	STR.	CAP T&S BOT.
8P514E	4	23'-2"	STR.	CAP T&S BOT.
8P515E	20	25'-0"	STR.	CAP T&S
8P516E	43	5'-1"	BENT	CAP TOP STIRRUPS
8P517E	20	4'-2"	BENT	BOX PEDESTAL TIE
8P518E	6	7'-6"	BENT	BOX PEDESTAL TIE
8P519E	24	4'-6"	BENT	BEAM PEDESTAL TIE
8P520E	16	5'-9"	BENT	BEAM PEDESTAL TIE
8P521E	10	10'-10"	BENT	SHEAR LUG TIE
8P522E	6	11'-6"	BENT	SHEAR LUG TIE
8P523E	8	7'-8"	BENT	SHEAR LUG TIE
8P524E	6	8'-2"	BENT	SHEAR LUG TIE

NO.	DATE	BY	CHECK	DESIGN	REVISION / SUBMITTAL

DESIGNED BY: RHK CHECKED BY: JBW
DRAWN BY: LMT CHECKED BY: EJT

AECOM Kimley»Horn

90% SUBMISSION - 01/22/16

METROPOLITAN COUNCIL

SOUTHWEST Green Line LRT Extension

CIVIL - VOLUME 4G
LRT OVER BNSF
BRIDGE R0697
PIER 8 REINFORCEMENT 2

DISCIPLINE: STRUCTURES
SHEET NAME: CBRR0697-BRG-PIR-001-17

SHEET 45 OF 118

Jan, 18 2016 01:40 pm V:\3400_ADC\CAD\SEGMENT E4\PLAN SHEETS\STRUCTURES\R0697\CBRR0697-BRG-PIR-001.dwg By: lisa.thompson

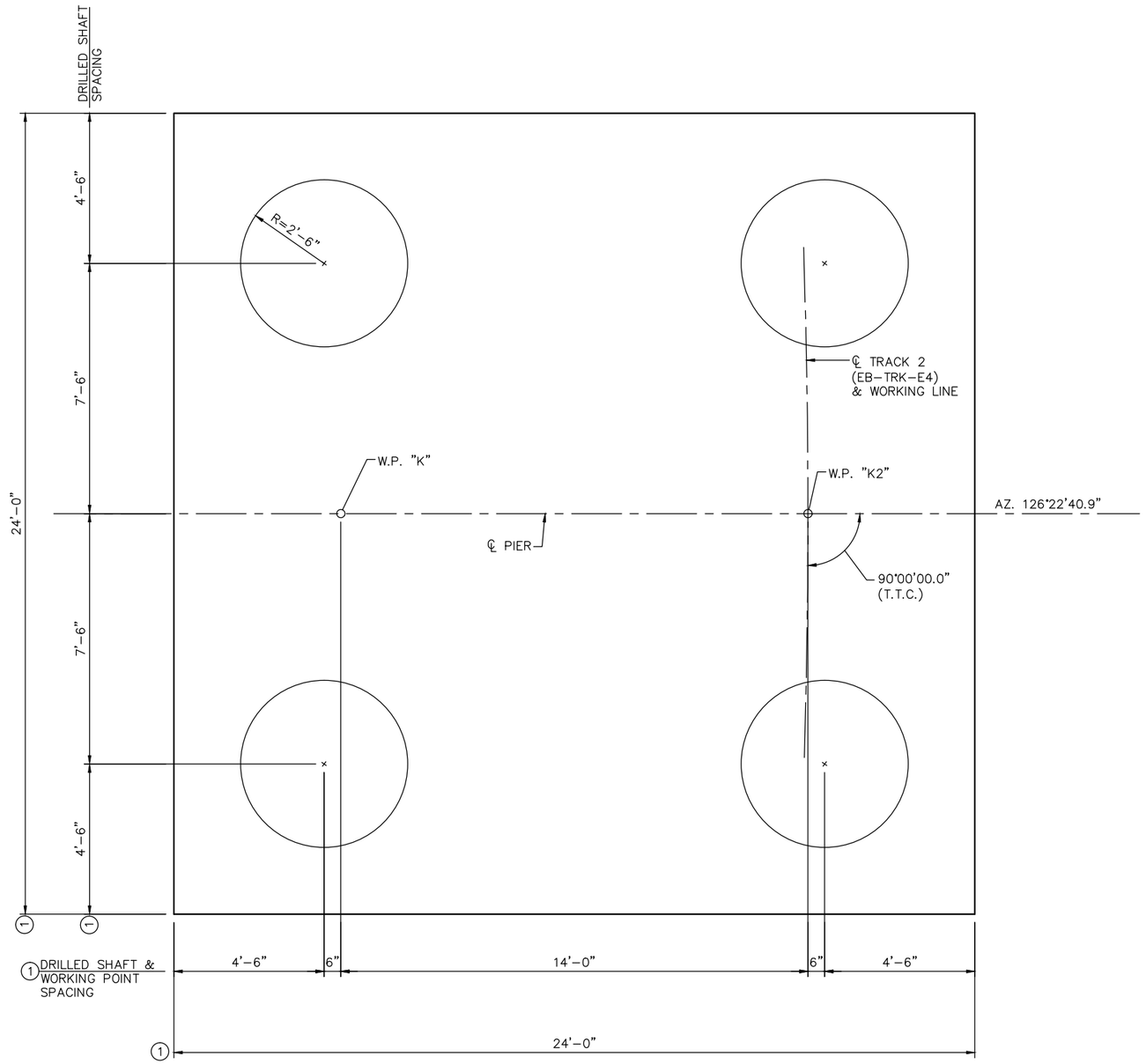

FOOTING PLAN

DRILLED SHAFT NOTES:

DRILLED SHAFT SHALL BE SOCKETED A MINIMUM OF 20 FEET INTO BEDROCK.

DRILLED SHAFT SHALL HAVE A DIAMETER OF 5'-0" ABOVE BEDROCK AND MINIMUM DIAMETER OF 4'-6" WITHIN BEDROCK.

CONCRETE FOR DRILLED SHAFT SHALL HAVE A MINIMUM COMPRESSIVE STRENGTH OF 5 KSI.

NOTES:

(1) DIMENSIONS MEASURED ALONG ℄ OF PIER.

NO.	DATE	BY	CHECK	DESIGN	REVISION / SUBMITTAL

DESIGNED BY: RHK | CHECKED BY: EJT
DRAWN BY: LMT | CHECKED BY: EJT

AECOM Kimley»Horn

90% SUBMISSION - 01/22/16

METROPOLITAN COUNCIL

SOUTHWEST Green Line LRT Extension

CIVIL - VOLUME 4G
LRT OVER BNSF
BRIDGE R0697
PIER 9 DETAILS 1

DISCIPLINE: STRUCTURES

SHEET NAME: CBRR0697-BRG-PIR-001-18

SHEET 46 OF 118

Jan, 18 2016 01:40 pm v:\3400_ADC\CAD\SEGMENT E4\PLAN SHEETS\STRUCTURES\R0697\CBRR0697-BRG-PIR-001.dwg By: lisa.thompson

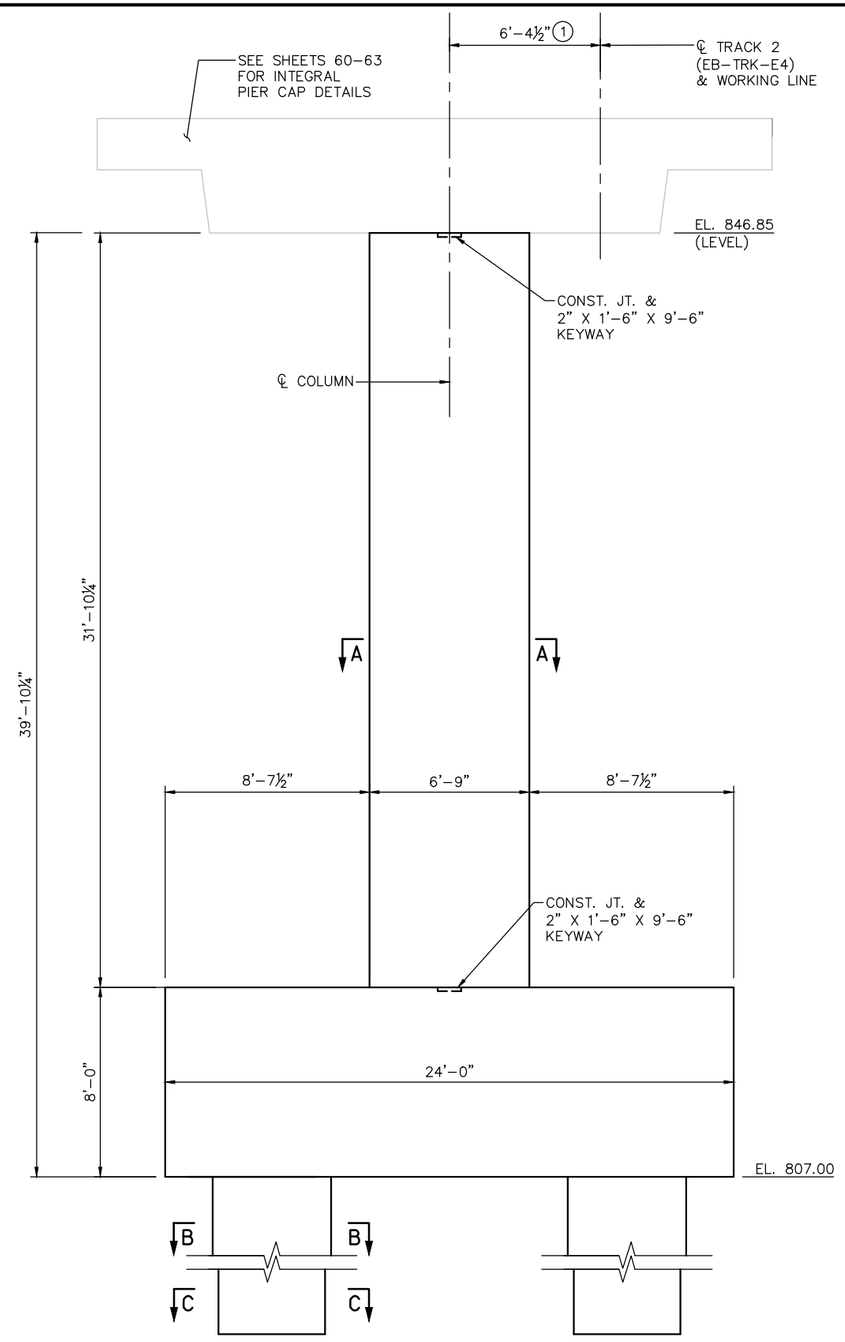

ELEVATION AT CENTERLINE OF PIER

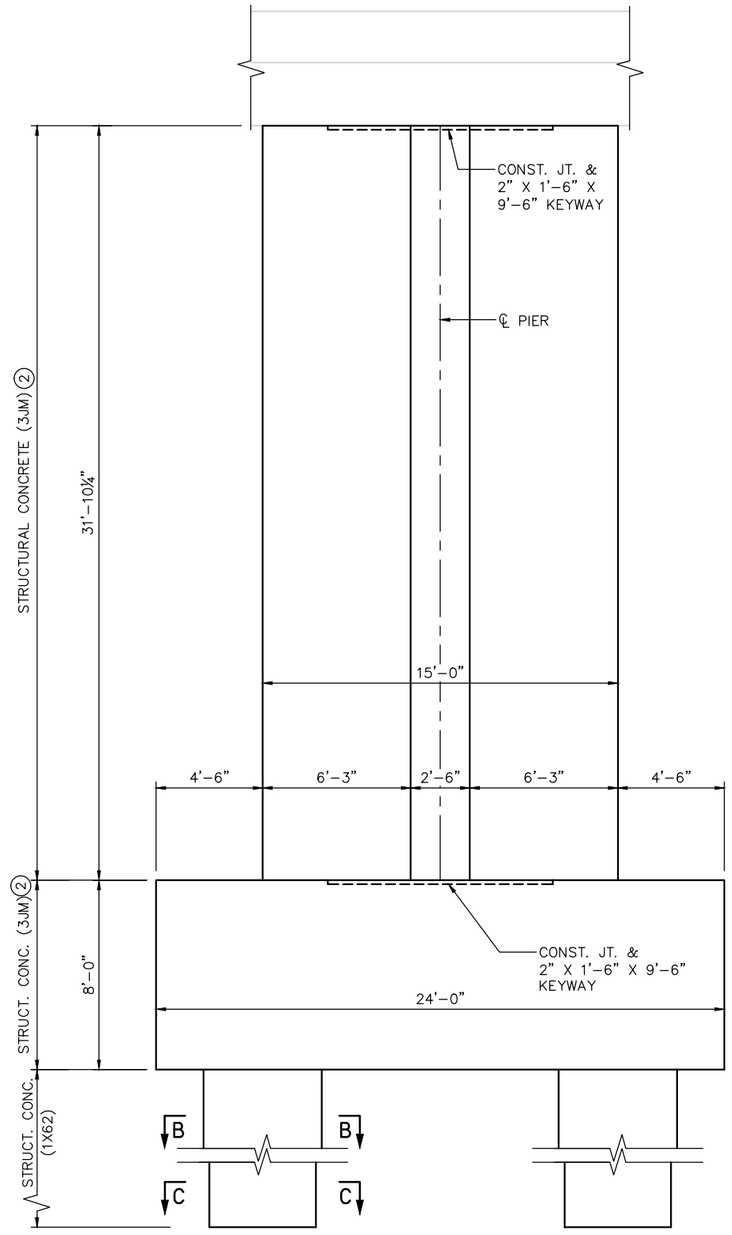

END ELEVATION

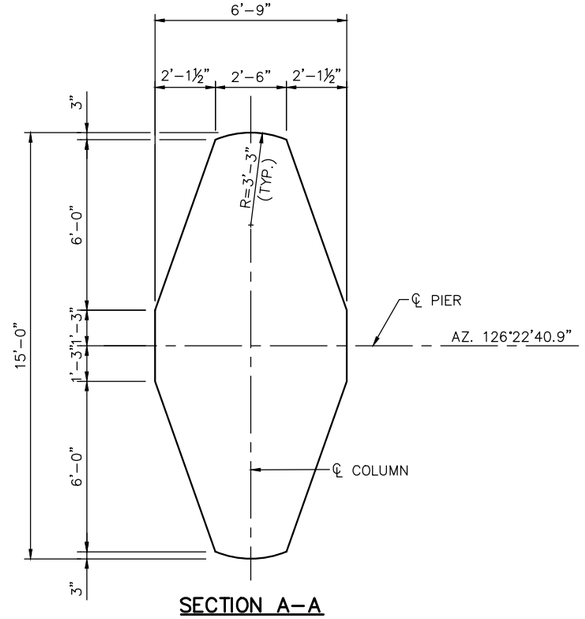

SECTION A-A

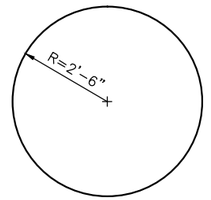

SECTION B-B

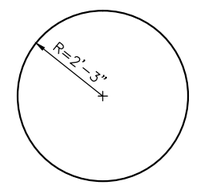

SECTION C-C

NOTES:

(1) DIMENSIONS MEASURED ALONG ℄ OF PIER 9.

(2) CONCRETE SHALL HAVE A MINIMUM COMPRESSIVE STRENGTH OF 6 KSI.

NO.	DATE	BY	CHECK	DESIGN	REVISION / SUBMITTAL

DESIGNED BY: RHK | CHECKED BY: EJT
DRAWN BY: LMT | CHECKED BY: EJT

AECOM Kimley»Horn

90% SUBMISSION - 01/22/16

METROPOLITAN COUNCIL

SOUTHWEST Green Line LRT Extension

CIVIL - VOLUME 4G
LRT OVER BNSF
BRIDGE R0697
PIER 9 DETAILS 2

DISCIPLINE: STRUCTURES

SHEET NAME: CBRR0697-BRG-PIR-001-19

SHEET 47 OF 118

Jan, 18 2016 01:40 pm V:\3400_ADC\CAD\SEGMENT E4\PLAN SHEETS\STRUCTURES\R0697\CBRR0697-BRG-PIR-001.dwg By: lisa.thompson

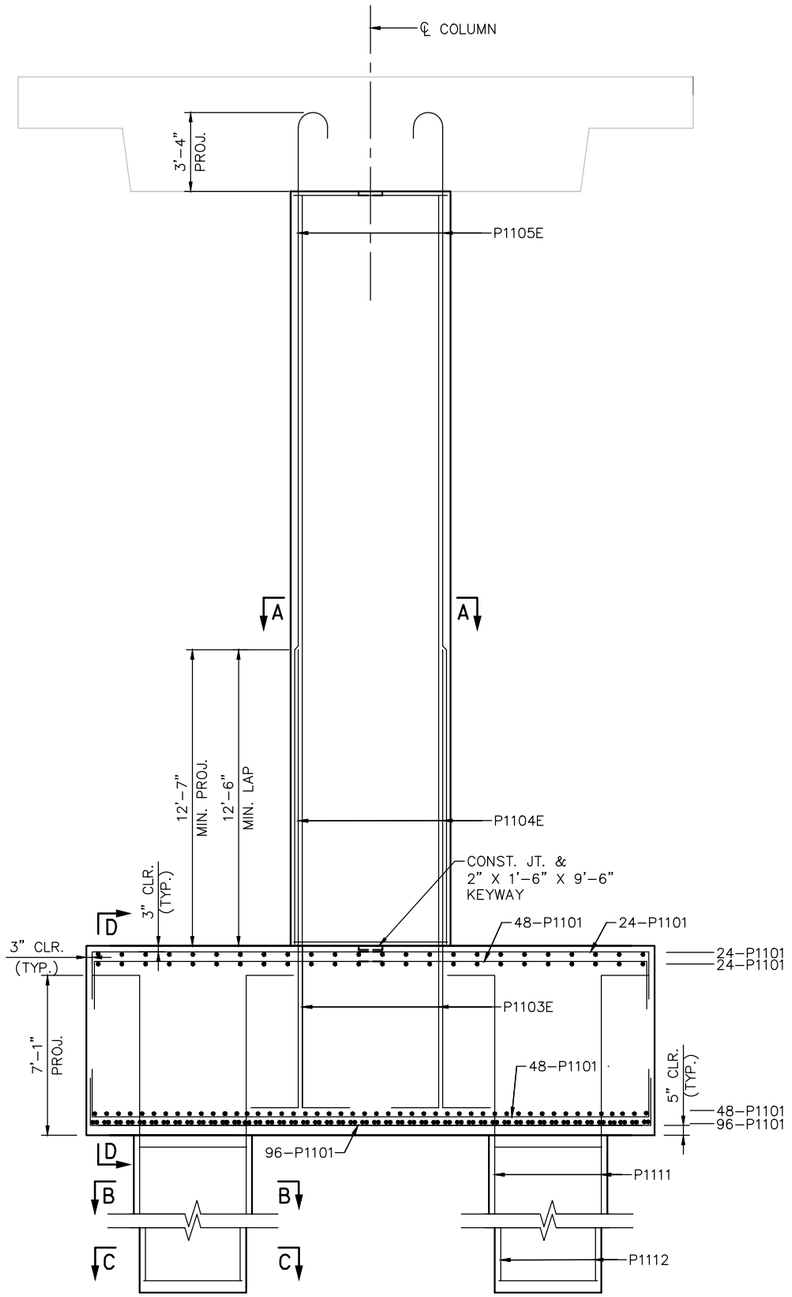

ELEVATION

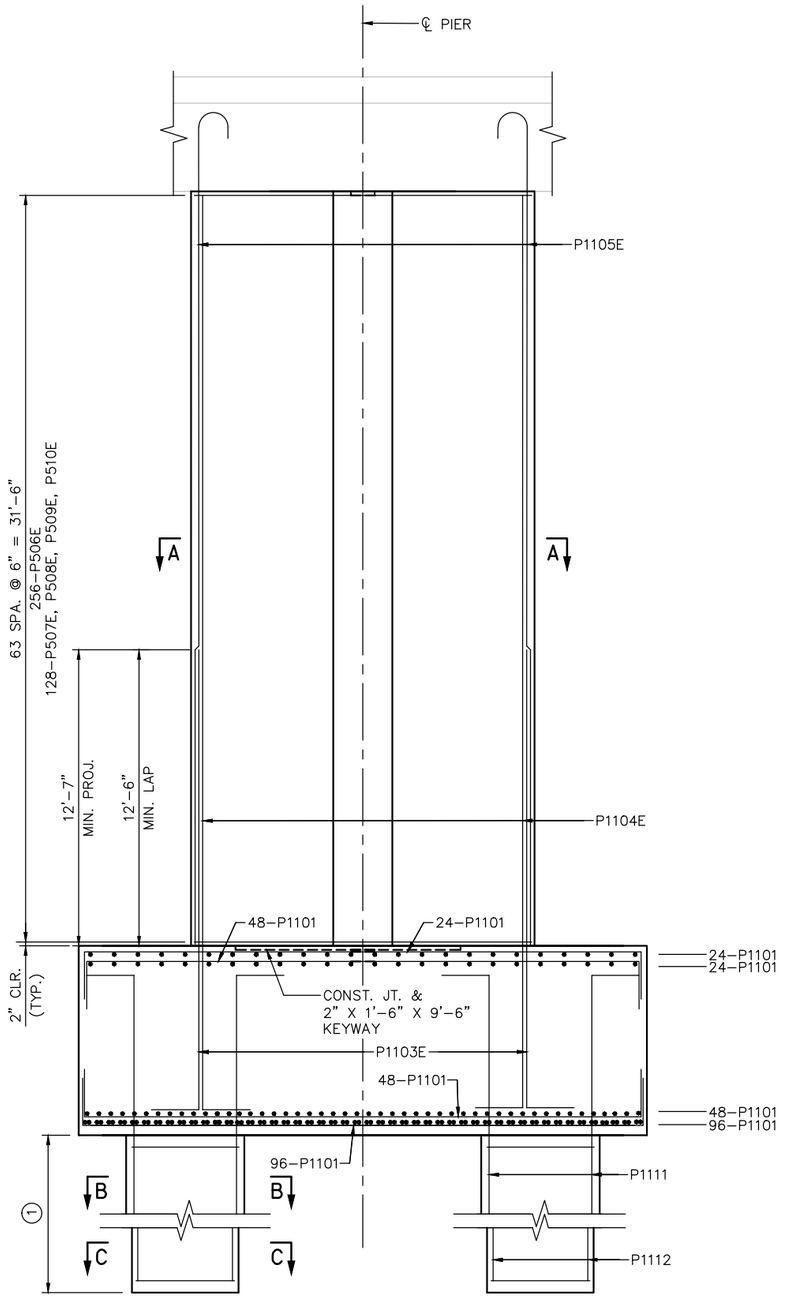

END ELEVATION

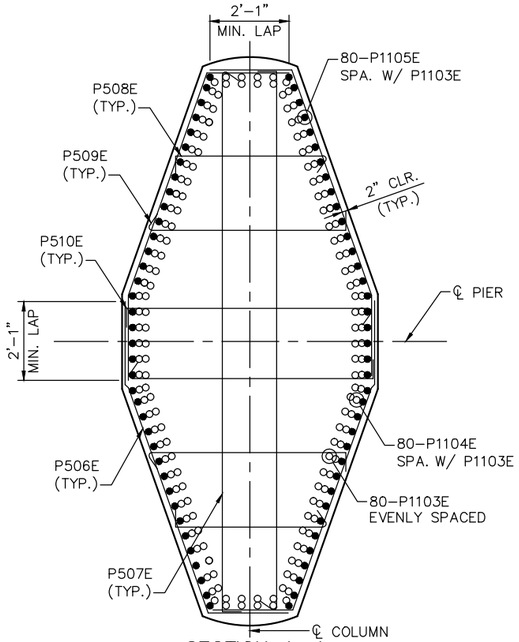

SECTION A-A

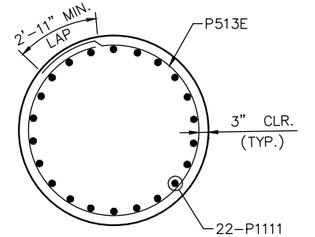

SECTION B-B

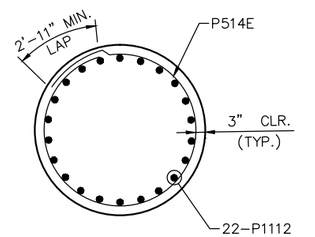

SECTION C-C

NOTES:

SEE SHEET 49 FOR SECTION D-D.

(1) SEE SHEET 49 FOR DRILLED SHAFT REINFORCEMENT.

NO.	DATE	BY	CHECK	DESIGN	REVISION / SUBMITTAL

DESIGNED BY: RHK | CHECKED BY: EJT

DRAWN BY: LMT | CHECKED BY: EJT

AECOM Kimley»Horn

90% SUBMISSION - 01/22/16

METROPOLITAN COUNCIL

SOUTHWEST Green Line LRT Extension

CIVIL - VOLUME 4G
LRT OVER BNSF
BRIDGE R0697
PIER 9 REINFORCEMENT 1

DISCIPLINE: STRUCTURES

SHEET NAME: CBRR0697-BRG-PIR-001-20

SHEET 48 OF 118

Jan, 18 2016 01:40 pm V:\3400_ADC\CAD\SEGMENT E4\PLAN SHEETS\STRUCTURES\R0697\CBRR0697-BRG-PIR-001.dwg By: lisa.thompson

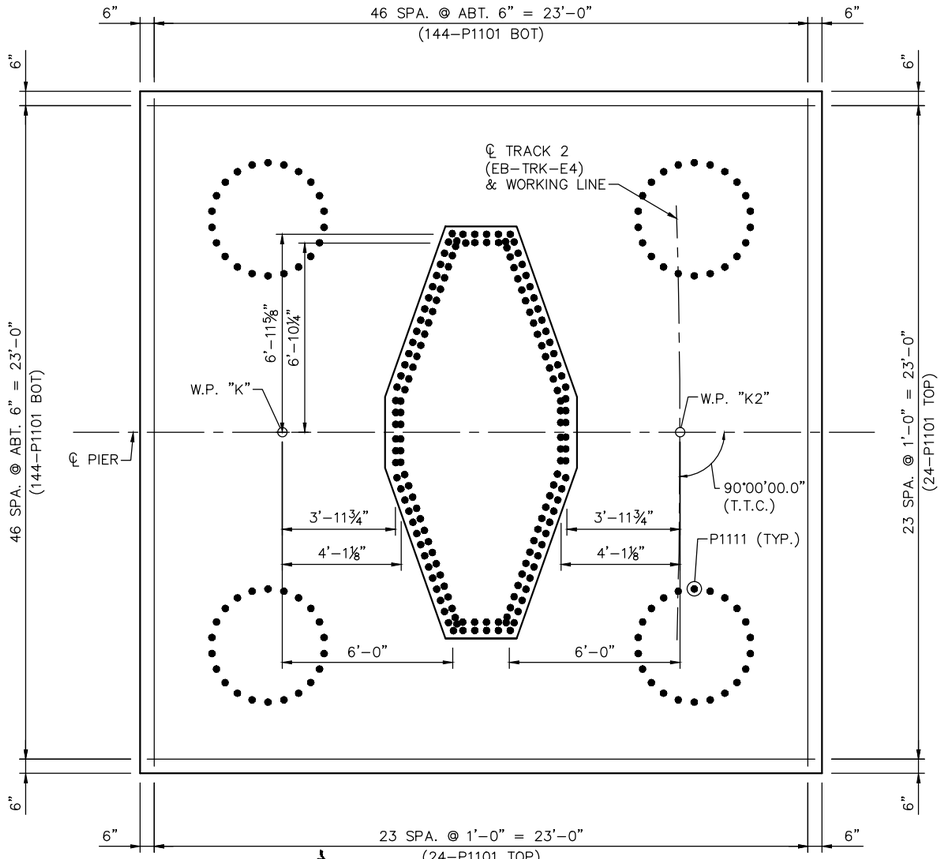

FOOTING PLAN

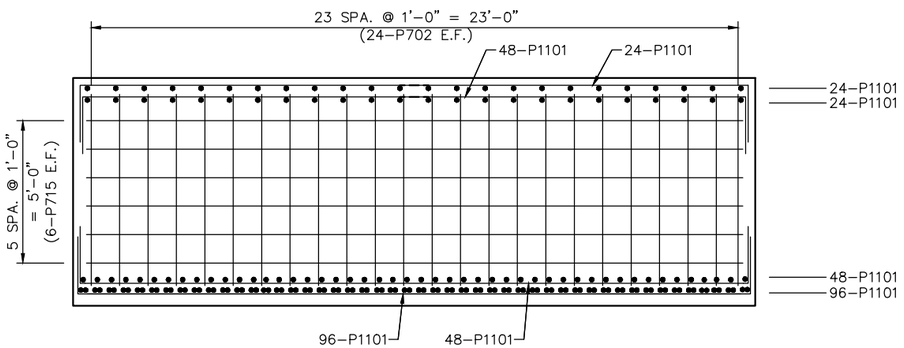

SECTION D-D

NOTES:

SEE SHEET 48 FOR LOCATION OF SECTION D-D.

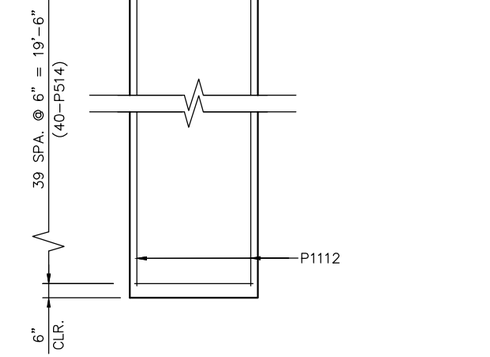

DRILLED SHAFT DETAIL

BILL OF REINFORCEMENT FOR PIER 9

BAR	NO.	LENGTH	SHAPE	LOCATION
9P1101	384	27'-6"	BENT	FOOTING, TRANS. & LONG.
9P702	24	8'-11"	BENT	FOOTING MASS CONC. VERT.
9P1103E	76	22'-3"	BENT	COLUMN DOWEL
9P1104E	80	40'-8"	BENT	COLUMN DOWEL
9P1105E	80	36'-2"	BENT	COLUMN VERT
9P506E	256	10'-4"	BENT	COLUMN TIE
9P507E	128	15'-2"	BENT	COLUMN TIE
9P508E	128	4'-10"	BENT	COLUMN TIE
9P509E	128	6'-1"	BENT	COLUMN TIE
9P510E	128	7'-4"	BENT	COLUMN TIE
9P1111	88	38'-3"	BENT	DRILLED SHAFT DOWEL
9P1112	88	38'-6"	STR.	DRILLED SHAFT VERT
9P513	360	16'-4"	BENT	DRILLED SHAFT TIE
9P514	160	15'-3"	BENT	DRILLED SHAFT TIE
9P715	96	23'-6"	STR.	FOOTING MASS CONC. HORIZ.

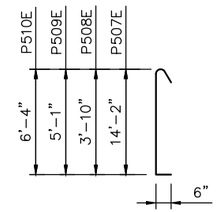

P507E, P508E, P509E, & P510E

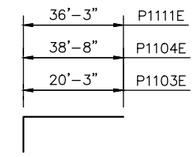

P1103E, P1104E, & P1111E

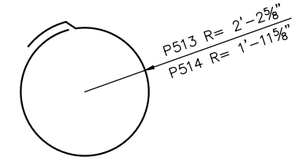

P513 & P514

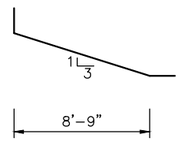

A506E

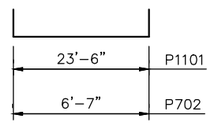

P1101 & P702

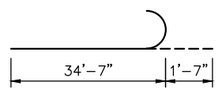

P1105

NO.	DATE	BY	CHECK	DESIGN	REVISION / SUBMITTAL

DESIGNED BY: RHK | CHECKED BY: EJT
DRAWN BY: LMT | CHECKED BY: EJT

AECOM Kimley»Horn

90% SUBMISSION - 01/22/16

METROPOLITAN COUNCIL

SOUTHWEST Green Line LRT Extension

CIVIL - VOLUME 4G
LRT OVER BNSF
BRIDGE R0697
PIER 9 REINFORCEMENT 2

DISCIPLINE: STRUCTURES
SHEET NAME: CBRR0697-BRG-PIR-001-21

SHEET 49 OF 118

Jan, 18 2016 01:40 pm V:\3400_ADC\CAD\SEGMENT E4\PLAN SHEETS\STRUCTURES\R0697\CBRR0697-BRG-PIR-001.dwg By: lisa.thompson

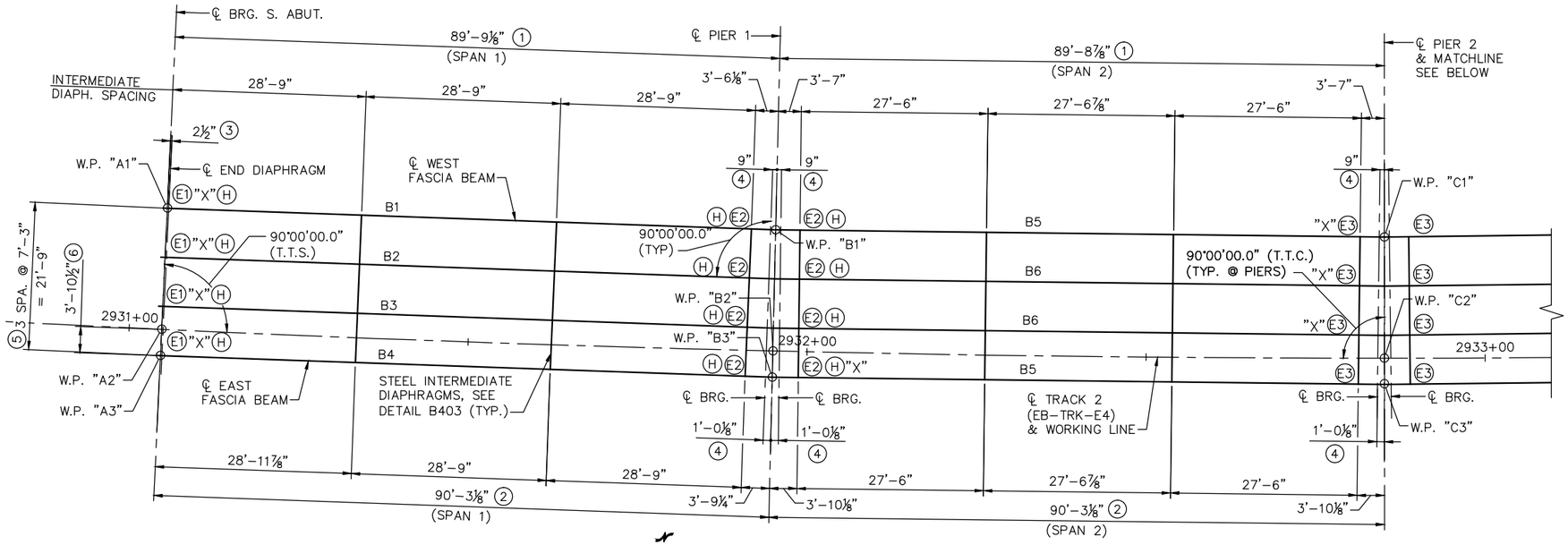

FRAMING PLAN

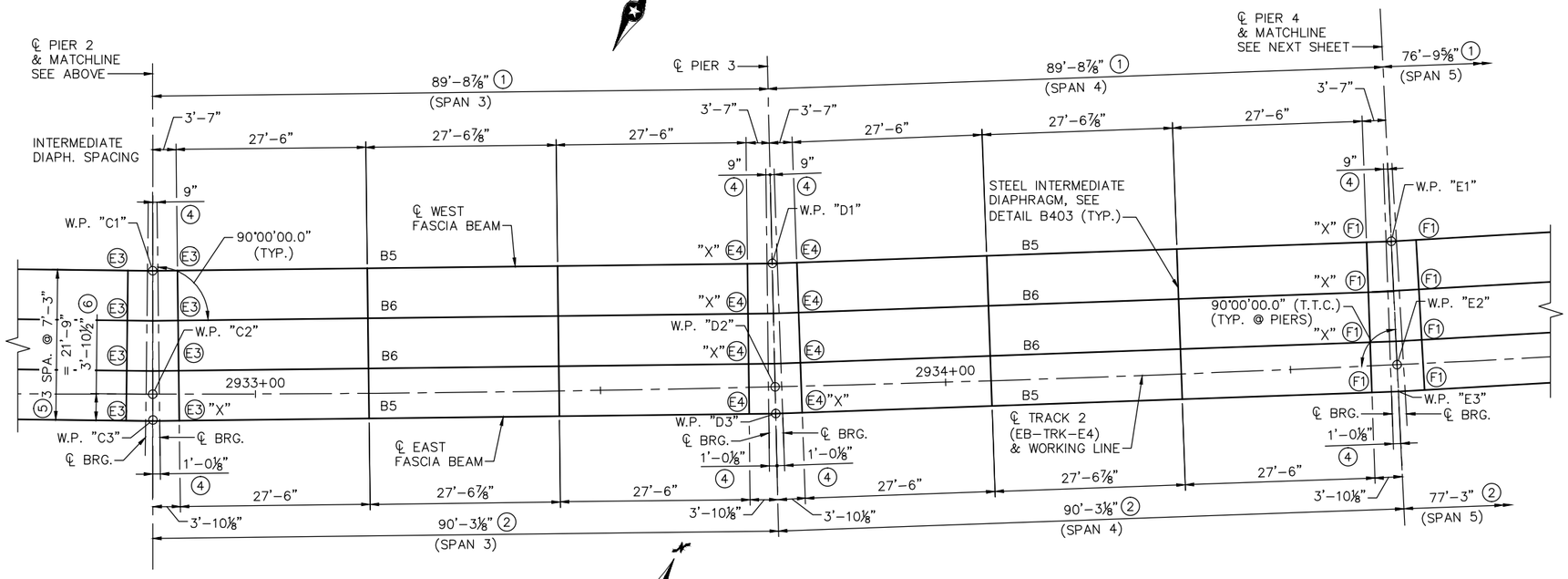

FRAMING PLAN

NOTES:

ALL STEEL INTERMEDIATE DIAPHRAGMS SHALL BE SET PERPENDICULAR TO BEAMS.

SEE SHEETS NO. 53 & 54 FOR PRESTRESSED CONCRETE BEAM DETAILS.

(E1) DENOTES EXPANSION CURVED PLATE BEARING ASSEMBLY TYPE 1. SEE DETAIL B311.

(E2) DENOTES EXPANSION CURVED PLATE BEARING ASSEMBLY TYPE 2. SEE DETAIL B311.

(E3) DENOTES EXPANSION CURVED PLATE BEARING ASSEMBLY TYPE 3. SEE DETAIL B311.

(E4) DENOTES EXPANSION CURVED PLATE BEARING ASSEMBLY TYPE 4. SEE DETAIL B311.

(F1) DENOTES FIXED CURVED PLATE ASSEMBLY TYPE 1. SEE DETAIL B310.

(H) DENOTES TAPERED BEARING PLATE. INSTALL THICKER SIDE OF BEARING PLATE ON UPHILL SIDE OF CENTERLINE BEARING. SEE DETAIL B311.

"X" INDICATES END OF BEAM.

(1) WORKING POINT DIMENSIONS MEASURED ALONG WEST FASCIA BEAM.

(2) WORKING POINT DIMENSIONS MEASURED ALONG EAST FASCIA BEAM.

(3) CONCRETE END DIAPHRAGM SHALL BE PARALLEL TO CENTERLINE BEARING. SEE DETAIL B814.

(4) DIMENSIONS ALONG CENTERLINE OF FASCIA BEAM TO WORKING POINT.

(5) MN54 PRESTRESSED CONCRETE BEAMS.

(6) DIMENSION MEASURED BETWEEN WORKING POINTS AT SUBSTRUCTURE.

NO.	DATE	BY	CHECK	DESIGN	REVISION / SUBMITTAL

DESIGNED BY: BAW | CHECKED BY: BLF
DRAWN BY: LMT | CHECKED BY: EJT

AECOM Kimley»Horn

90% SUBMISSION - 01/22/16

METROPOLITAN COUNCIL

SOUTHWEST Green Line LRT Extension

CIVIL - VOLUME 4G
LRT OVER BNSF
BRIDGE R0697
FRAMING PLAN 1

DISCIPLINE: STRUCTURES
SHEET NAME: CBRR0697-BRG-SUP-002-1

SHEET 50 OF 118

Jan. 18 2016 01:41 pm V:\3400_ADC\CAD\SEGMENT E4\PLAN SHEETS\STRUCTURES\R0697\CBRR0697-BRG-SUP-002.dwg By: lisa.thompson

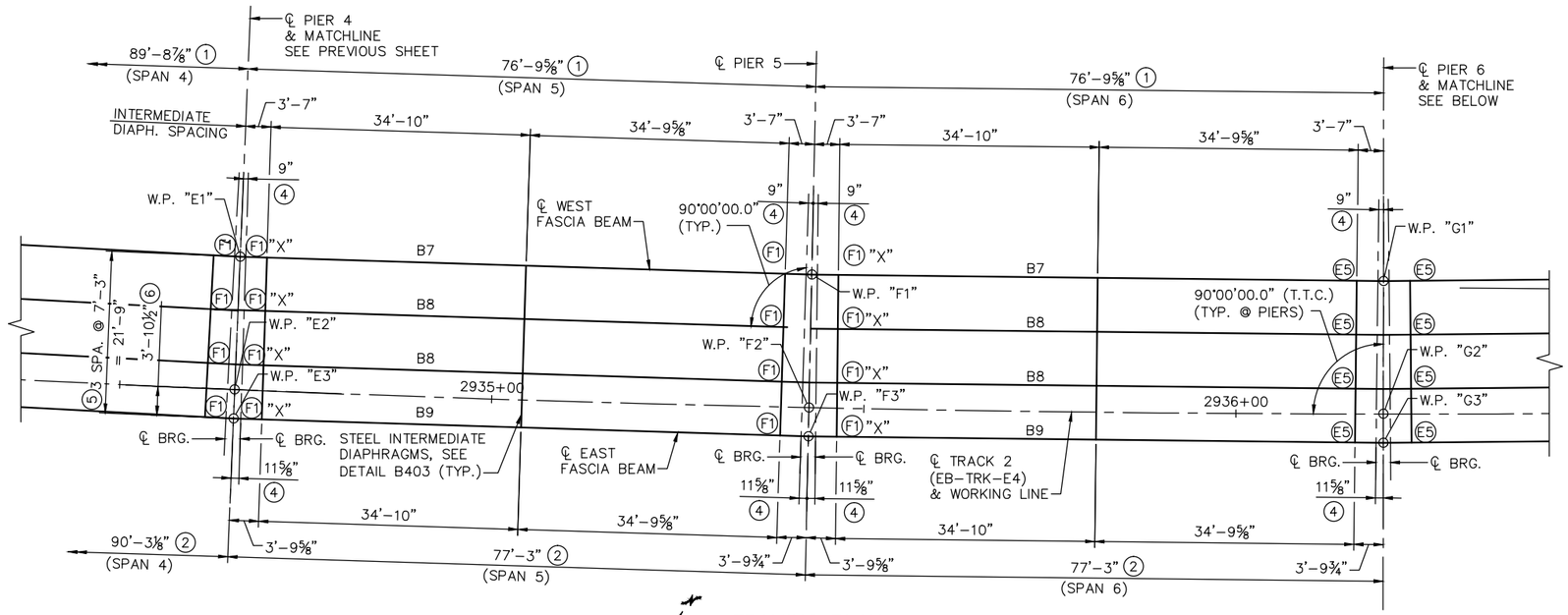

FRAMING PLAN

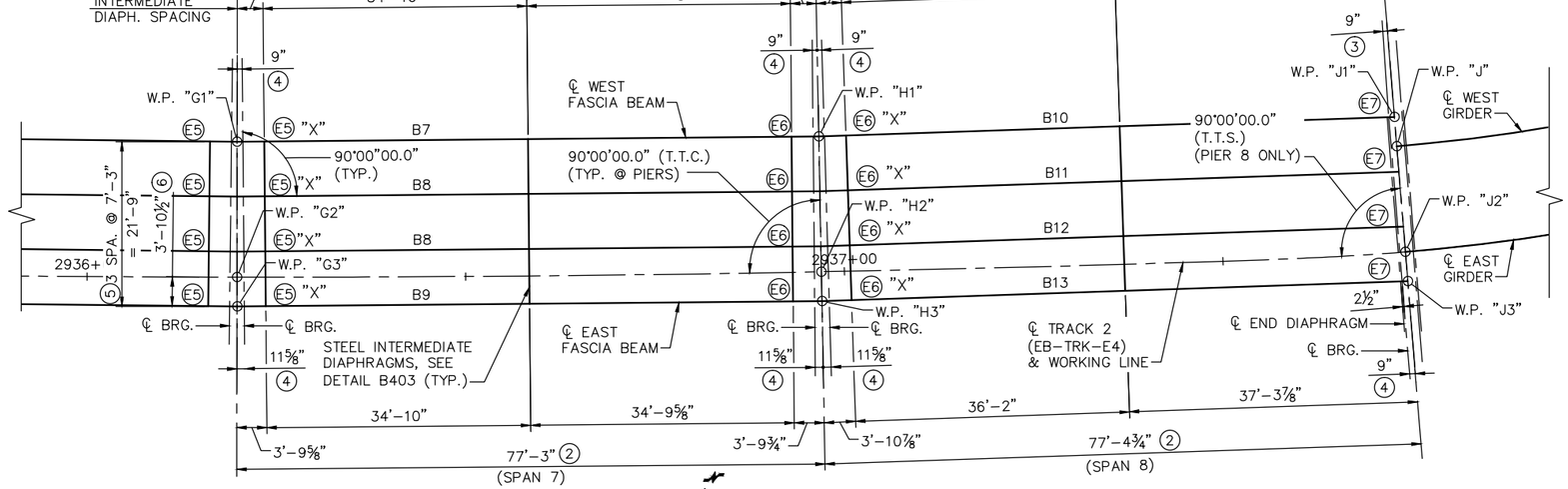

FRAMING PLAN

NOTES:

ALL STEEL INTERMEDIATE DIAPHRAGMS SHALL BE SET PERPENDICULAR TO BEAMS.

SEE SHEETS NO. 55 & 56 FOR PRESTRESSED CONCRETE BEAM DETAILS.

(E5) DENOTES EXPANSION CURVED PLATE BEARING ASSEMBLY TYPE 5. SEE DETAIL B311.

(E6) DENOTES EXPANSION CURVED PLATE BEARING ASSEMBLY TYPE 6. SEE DETAIL B311.

(E7) DENOTES EXPANSION CURVED PLATE BEARING ASSEMBLY TYPE 7. SEE DETAIL B311.

(F1) DENOTES FIXED CURVED PLATE ASSEMBLY TYPE 1. SEE DETAIL B310.

"X" INDICATES END OF BEAM.

(1) WORKING POINT DIMENSIONS MEASURED ALONG WEST FASCIA BEAM.

(2) WORKING POINT DIMENSIONS MEASURED ALONG EAST FASCIA BEAM.

(3) CONCRETE END DIAPHRAGM SHALL BE PARALLEL TO CENTERLINE BEARING. SEE DETAIL B814.

(4) DIMENSION ALONG CENTERLINE OF FASCIA BEAM TO WORKING POINT.

(5) MN54 PRESTRESSED CONCRETE BEAMS.

(6) DIMENSION MEASURED BETWEEN WORKING POINTS AT SUBSTRUCTURE.

NO.	DATE	BY	CHECK	DESIGN	REVISION / SUBMITTAL

DESIGNED BY: BAW | CHECKED BY: BLF
DRAWN BY: LMT | CHECKED BY: EJT

AECOM Kimley»Horn

90% SUBMISSION - 01/22/16

METROPOLITAN COUNCIL

SOUTHWEST Green Line LRT Extension

CIVIL - VOLUME 4G
LRT OVER BNSF
BRIDGE R0697
FRAMING PLAN 2

DISCIPLINE: STRUCTURES
SHEET NAME: CBRR0697-BRG-SUP-002-2

SHEET 51 OF 118

Jan, 18 2016 01:41 pm V: \3400_ADC\CAD\SEGMENT E4\PLAN SHEETS\STRUCTURES\R0697\CBRR0697-BRG-SUP-002.dwg By: lisa.thompson

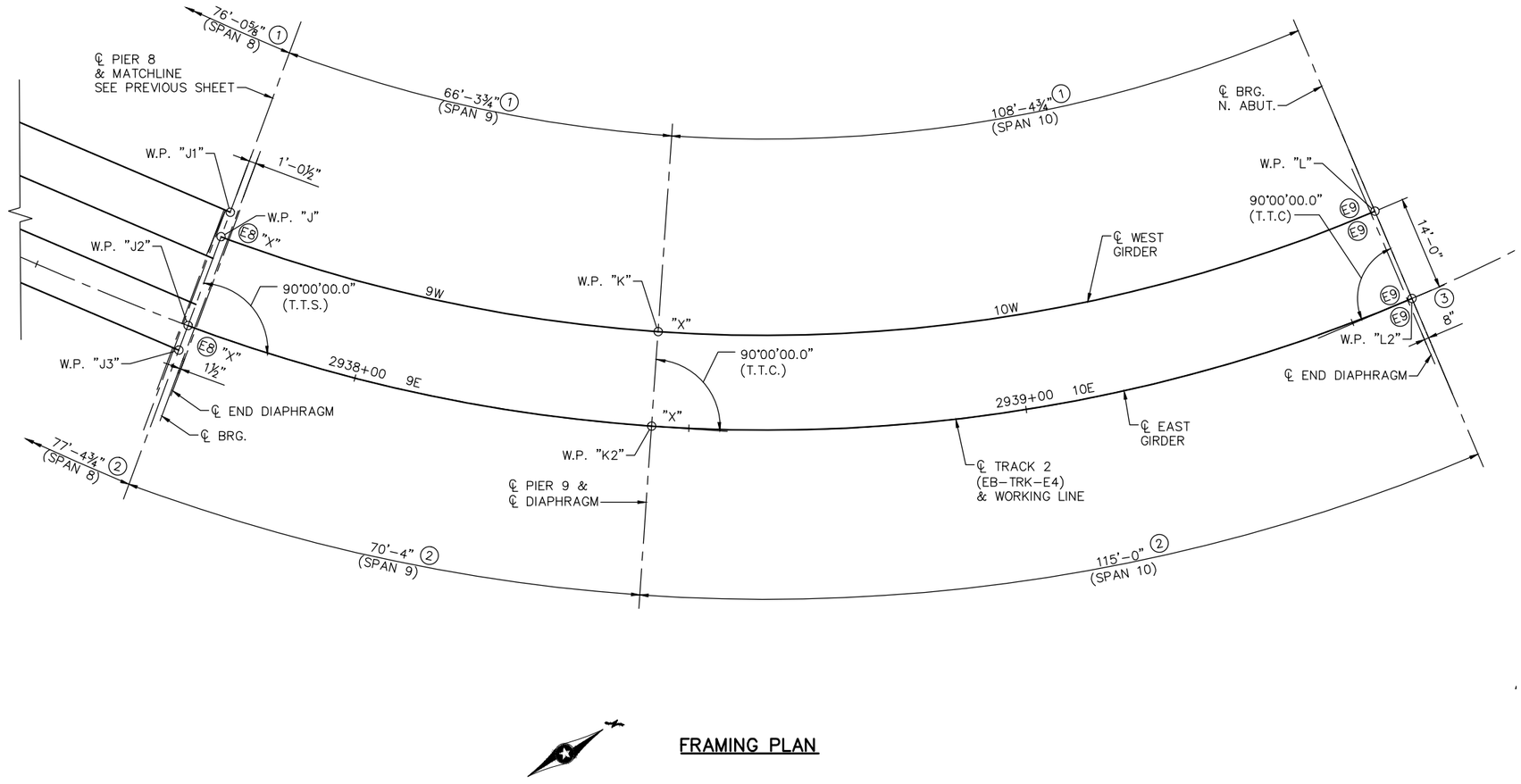

FRAMING PLAN

NOTES:

SEE SHEETS 57–60 FOR GIRDER DETAILS.

(E8) DENOTES EXPANSION CURVED PLATE BEARING ASSEMBLY TYPE 8. SEE DETAIL B311.

(E9) DENOTES EXPANSION CURVED PLATE BEARING ASSEMBLY TYPE 9. SEE DETAIL B311.

"X" INDICATES END OF BEAM.

(1) DIMENSIONS MEASURED ALONG ℄ WEST GIRDERS.

(2) DIMENSIONS MEASURED ALONG ℄ EAST GIRDERS.

(3) CONCRETE GIRDER.

NO.	DATE	BY	CHECK	DESIGN	REVISION / SUBMITTAL

DESIGNED BY: BAW | CHECKED BY: BLF
DRAWN BY: LMT | CHECKED BY: EJT

AECOM Kimley»Horn

90% SUBMISSION - 01/22/16

METROPOLITAN COUNCIL

SOUTHWEST Green Line LRT Extension

CIVIL - VOLUME 4G
LRT OVER BNSF
BRIDGE R0697
FRAMING PLAN 3

DISCIPLINE: STRUCTURES
SHEET NAME: CBRR0697-BRG-SUP-002-3

SHEET 52 OF 118

Jan. 18 2016 01:41 pm V:\3400_ADC\CAD\SEGMENT E4\PLAN SHEETS\STRUCTURES\R0697\CBRR0697-BRG-SUP-002.dwg By: lisa.thompson

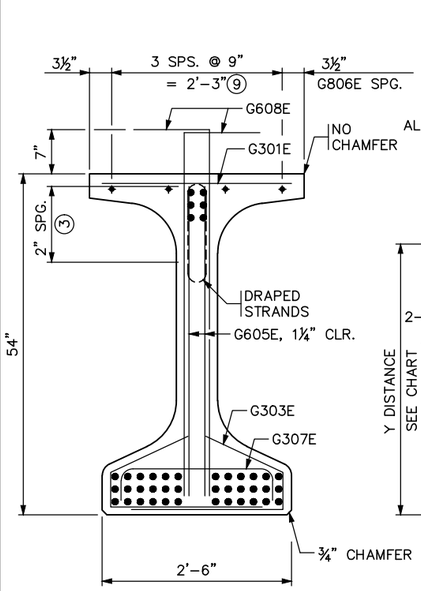

END VIEW

CUT STRANDS FLUSH WITH CONCRETE. COVER ENDS WITH SEALANT PER APPROVED PRODUCTS LIST "BRIDGE-PRESTRESSED BEAMS-CUT STRAND SEALANT."

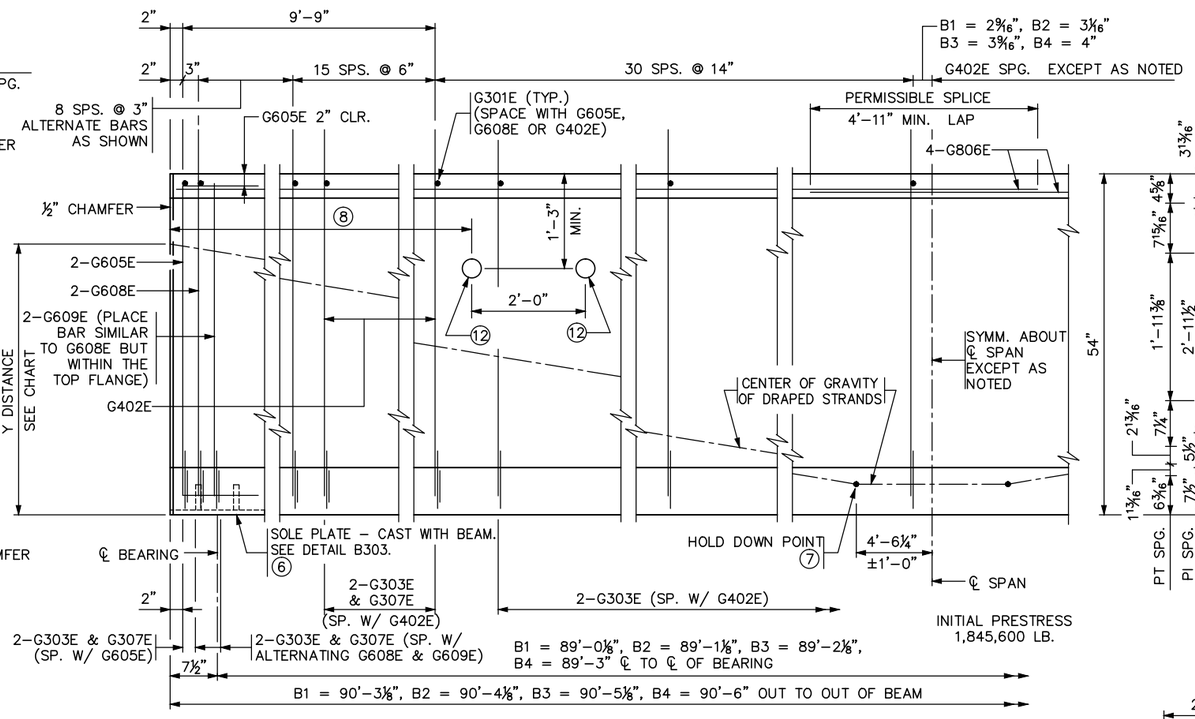

BEAM ELEVATION

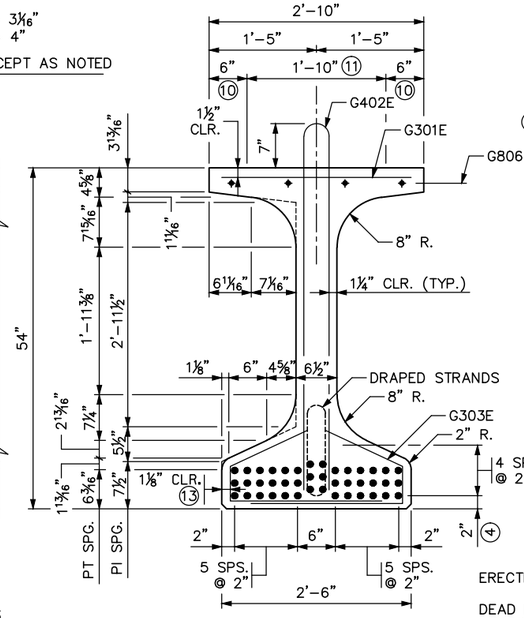

SECTION AT ℄ SPAN

Y DISTANCES (INCHES)	NO.	℄ SPAN	END
STRAIGHT STRANDS	36	4	
DRAPED STRANDS	6	5	49.00 ▫
(5) TOTAL STRANDS	42	4.14	

Y = DISTANCE TO CENTER OF GRAVITY OF STRANDS FROM BOTTOM OF BEAM. ALL STRANDS SPACED 2" CENTER TO CENTER, HORIZONTALLY AND VERTICALLY, EXCEPT AS NOTED.

▫ A TOLERANCE OF ±1" WILL BE PERMITTED IN THIS DIMENSION.

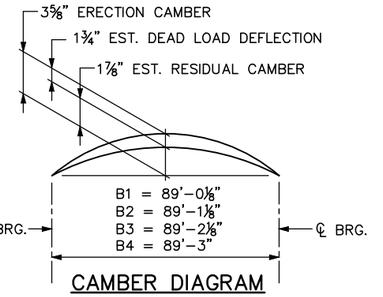

CAMBER DIAGRAM

ERECTION CAMBER SHOWN IS AFTER DIAPHRAGMS ARE IN PLACE.

DEAD LOAD DEFLECTION SHOWN IS FOR WEIGHT OF SLAB, WEARING COURSE, BARRIER, SIDEWALK AND MEDIAN WHERE APPLICABLE.

CONTRACTOR WILL TAKE ELEVATIONS AT TOP OF BEAMS AFTER ERECTION AND WILL ALLOW FOR DEFLECTION SHOWN TO ENABLE BUILDING FORMS TO CORRECT GRADE AND SPECIFIED SLAB THICKNESS. PROVIDE COPY OF ELEVATIONS TO THE ENGINEER.

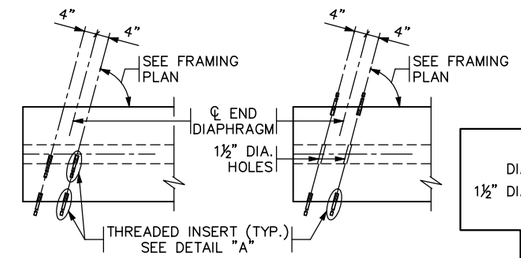

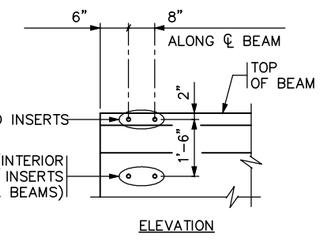

CONCRETE END DIAPHRAGM

PARAPET ABUTMENT
(SEE DETAIL B814 FOR DIAPHRAGM DETAILS)

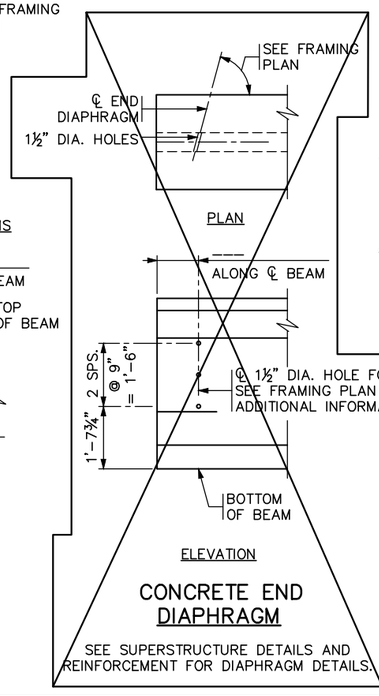

CONCRETE END DIAPHRAGM

SEE SUPERSTRUCTURE DETAILS AND REINFORCEMENT FOR DIAPHRAGM DETAILS.

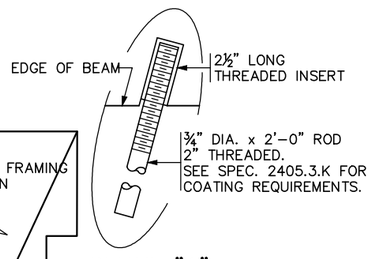

DETAIL "A"

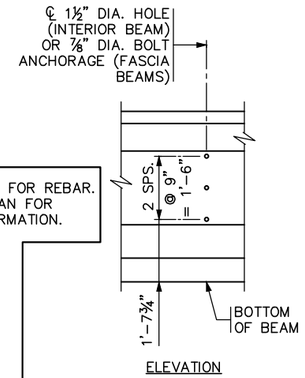

STEEL INTERMEDIATE DIAPHRAGM

(SEE DETAIL B403 FOR DIAPHRAGM DETAILS)

CALCULATED PRESTRESS LOSSES	
ELASTIC SHORTENING LOSS	25.12 KSI
LONG TERM LOSSES	24.62 KSI
TOTAL LOSSES	49.74 KSI

MINIMUM CONCRETE STRENGTH - K.S.I.	
① f'ci	② f'c
7.0 KSI	8.0 KSI

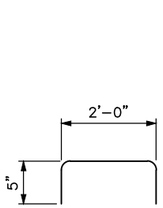

G307E

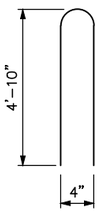

G402E

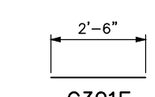

G301E

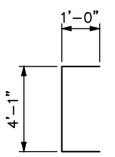

G605E

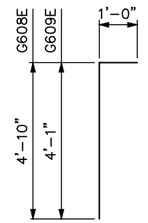

G608E & G609E

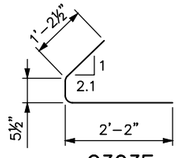

G303E

GENERAL NOTES

PROVIDE HANDLING HOOKS OR DEVICES AS REQUIRED BY CONTRACTOR.

MARK EACH BEAM SHOWING BRIDGE NUMBER, CASTING DATE, AND INDIVIDUAL IDENTIFICATION LETTERS AND NUMBERS ON THE FACE OF THE BEAM, NEAR THE END, SO LOCATED THAT THEY WILL BE EXPOSED AFTER THE END DIAPHRAGMS HAVE BEEN CAST. MARK FASCIA BEAMS ON THE INSIDE FACE. ENSURE ALL MARKINGS ARE STENCILLED AND CLEARLY LEGIBLE. FOR LOCATION OF BEAMS, SEE FRAMING PLAN.

~~ALL MATERIAL AND WORK SHOWN OR NOTED ON THIS SHEET IS INCLUDED IN UNIT PRICE BID FOR PRESTRESSED CONCRETE BEAMS. SEE SPEC. 2405.~~

SEE FRAMING PLAN FOR BEAM END MARKED "X" AND DIAPHRAGM SPACING.

AS AN ALTERNATE TO THE END DIAPHRAGM ANCHORAGES SHOWN, THE CONTRACTOR MAY SUBMIT DETAILS OF A CAST-IN-PLACE ANCHORAGE TO THE ENGINEER FOR APPROVAL. ANCHORAGE MUST PROVIDE AN ULTIMATE PULL OUT STRENGTH OF 15 KIPS PER ANCHORAGE.

APPLY AN APPROVED SEALER TO THE SIDES OF THE BEAM NEAR EACH END PER THE SPECIAL PROVISIONS.

① MINIMUM CONCRETE STRENGTH AT TIME OF PRESTRESS TRANSFER.

② MINIMUM CONCRETE STRENGTH WHEN BEAM CAN BE TRANSPORTED AND INSTALLED.

③ DRAPED STRANDS.

④ STRAIGHT STRANDS.

⑤ USE 0.6" DIA. 7-WIRE LOW RELAXATION PRESTRESSING STRAND, CONFORMING TO ASTM A416, GRADE 270.

⑥ ~~FOR INTEGRAL ABUTMENT, SOLE PLATE CAN BE ELIMINATED OR REPLACED WITH AN APPROVED PROTECTION PLATE. BEAMS DETAILED TO INCLUDE A TAPERED PLATE PER STANDARD FIGURE B309 MUST INCLUDE SOLE PLATE.~~

⑦ CENTER OF GRAVITY OF HOLD DOWNS WHEN MULTIPLE HOLD DOWNS ARE USED.

⑧ DIMENSION DETERMINED BY CONTRACTOR. MAINTAIN 2" MINIMUM CLEAR FROM STRANDS.

⑨ TWO INSIDE BARS MAY BE PLACED ADJACENT TO VERTICAL STIRRUP FOR TYING CONVENIENCE.

⑩ STEEL TROWEL TO SMOOTH FINISH AND APPLY BOND BREAKER PER APPROVED PRODUCTS LIST.

⑪ ROUGH FLOAT AND BROOM TRANSVERSELY FOR BOND PER SPEC. 2405.3.D.

⑫ OPTIONAL: 3" MAX. DIA. SLEEVE FOR HAULING (AFTER INSTALLATION, COAT WITH APPROVED EPOXY BONDING AGENT & FILL WITH APPROVED NON-SHRINK GROUT).

⑬ TYP. CLR. FOR ENTIRE BOTTOM FLANGE.

DRAFT-WORK IN PROCESS

REVISED: DECEMBER 02, 2015

APPROVED: JANUARY 13, 2015

Nancy Daubenberger
STATE BRIDGE ENGINEER

CERTIFIED BY _____ LICENSED PROFESSIONAL ENGINEER ___ DATE

NAME: ENGINEER _____ LIC. NO. ---

TITLE: MN54" PRESTRESSED CONCRETE BEAM (PRETENSIONED) MN54-91

BEAM B1-B4

FIG. 5-397.508

DES: BAW	DR: LMT	APPROVED:
CHK: BLF	CHK: BLF	

SHEET NO. 53 OF 118 SHEETS

BRIDGE NO. R0697

Jan, 18 2016 01:42 pm V:\3400_ADC\CAD\SEGMENT E4\PLAN SHEETS\STRUCTURES\R0697\CBRR0697-BRG-PCB-001.dwg By: lisa.thompson

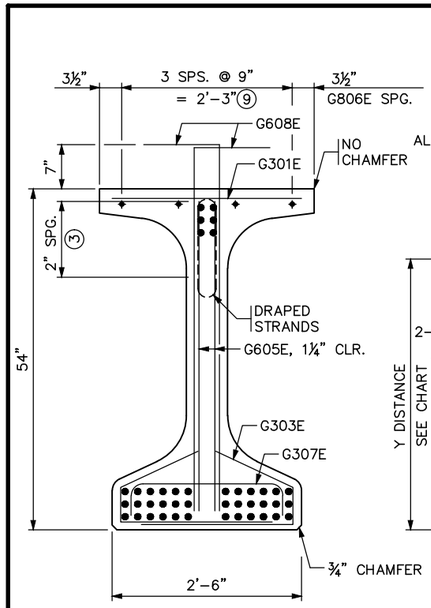

END VIEW

CUT STRANDS FLUSH WITH CONCRETE. COVER ENDS WITH SEALANT PER APPROVED PRODUCTS LIST "BRIDGE-PRESTRESSED BEAMS-CUT STRAND SEALANT."

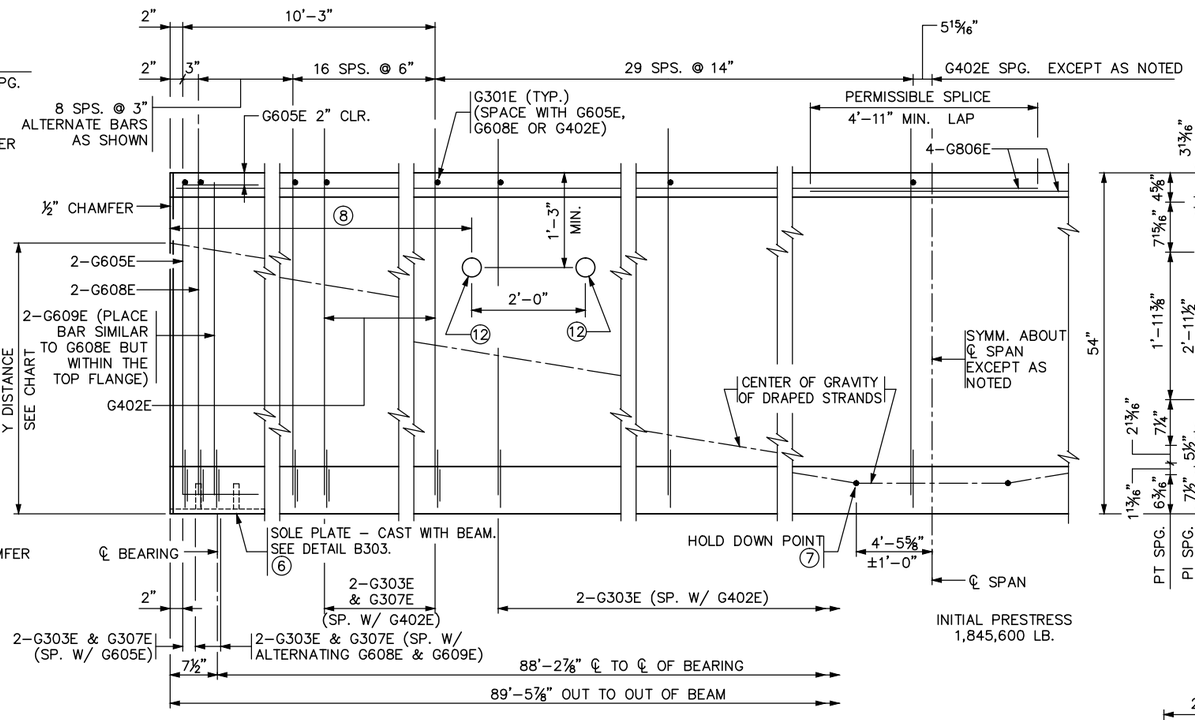

BEAM ELEVATION

INITIAL PRESTRESS 1,845,600 LB.

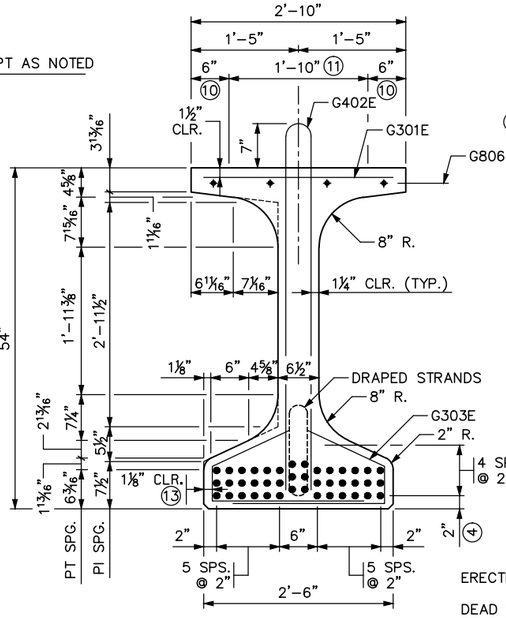

SECTION AT ℄ SPAN

Y DISTANCES (INCHES)	NO.	℄ SPAN	END
STRAIGHT STRANDS	36	4	
DRAPED STRANDS	6	5	49.00 ▫
(5) TOTAL STRANDS	42	4.14	

Y = DISTANCE TO CENTER OF GRAVITY OF STRANDS FROM BOTTOM OF BEAM. ALL STRANDS SPACED 2" CENTER TO CENTER, HORIZONTALLY AND VERTICALLY, EXCEPT AS NOTED.

▫ A TOLERANCE OF ±1" WILL BE PERMITTED IN THIS DIMENSION.

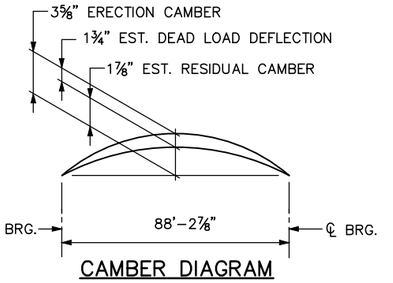

CAMBER DIAGRAM

ERECTION CAMBER SHOWN IS AFTER DIAPHRAGMS ARE IN PLACE.

DEAD LOAD DEFLECTION SHOWN IS FOR WEIGHT OF SLAB, WEARING COURSE, BARRIER, SIDEWALK AND MEDIAN WHERE APPLICABLE.

CONTRACTOR WILL TAKE ELEVATIONS AT TOP OF BEAMS AFTER ERECTION AND WILL ALLOW FOR DEFLECTION SHOWN TO ENABLE BUILDING FORMS TO CORRECT GRADE AND SPECIFIED SLAB THICKNESS. PROVIDE COPY OF ELEVATIONS TO THE ENGINEER.

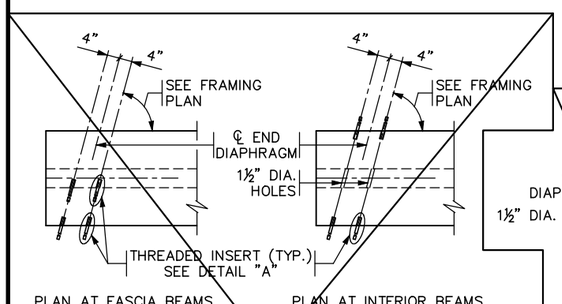

CONCRETE END DIAPHRAGM

PARAPET ABUTMENT
(SEE DETAIL B814 FOR DIAPHRAGM DETAILS)

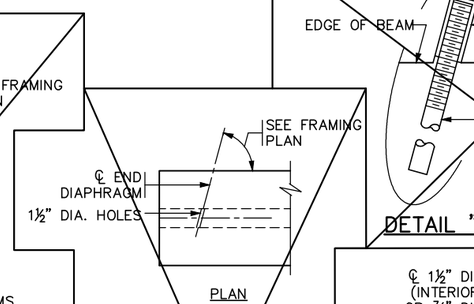

CONCRETE END DIAPHRAGM

SEE SUPERSTRUCTURE DETAILS AND REINFORCEMENT FOR DIAPHRAGM DETAILS

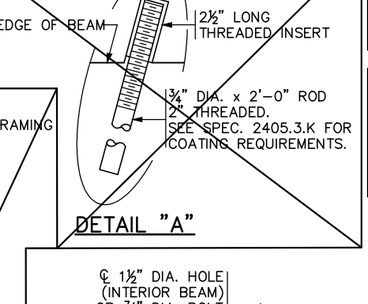

DETAIL "A"

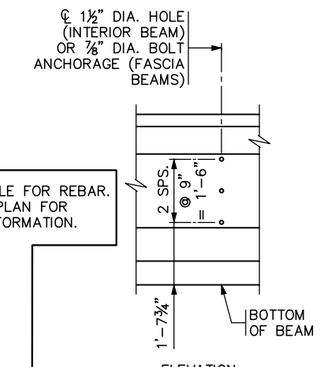

STEEL INTERMEDIATE DIAPHRAGM

(SEE DETAIL B403 FOR DIAPHRAGM DETAILS)

CALCULATED PRESTRESS LOSSES	
ELASTIC SHORTENING LOSS	25.12 KSI
LONG TERM LOSSES	24.62 KSI
TOTAL LOSSES	49.74 KSI

MINIMUM CONCRETE STRENGTH - K.S.I.	
① f'ci	② f'c
7.0 KSI	8.0 KSI

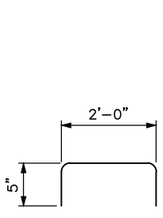

G307E

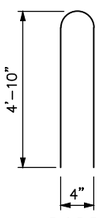

G402E

G301E

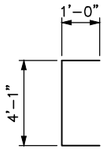

G605E

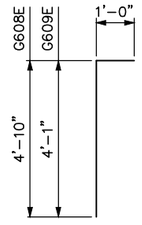

G608E & G609E

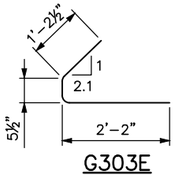

G303E

GENERAL NOTES

PROVIDE HANDLING HOOKS OR DEVICES AS REQUIRED BY CONTRACTOR.

MARK EACH BEAM SHOWING BRIDGE NUMBER, CASTING DATE, AND INDIVIDUAL IDENTIFICATION LETTERS AND NUMBERS ON THE FACE OF THE BEAM, NEAR THE END, SO LOCATED THAT THEY WILL BE EXPOSED AFTER THE END DIAPHRAGMS HAVE BEEN CAST. MARK FASCIA BEAMS ON THE INSIDE FACE. ENSURE ALL MARKINGS ARE STENCILLED AND CLEARLY LEGIBLE. FOR LOCATION OF BEAMS, SEE FRAMING PLAN.

~~ALL MATERIAL AND WORK SHOWN OR NOTED ON THIS SHEET IS INCLUDED IN UNIT PRICE BID FOR PRESTRESSED CONCRETE BEAMS. SEE SPEC. 2405.~~

SEE FRAMING PLAN FOR BEAM END MARKED "X" AND DIAPHRAGM SPACING.

AS AN ALTERNATE TO THE END DIAPHRAGM ANCHORAGES SHOWN, THE CONTRACTOR MAY SUBMIT DETAILS OF A CAST-IN-PLACE ANCHORAGE TO THE ENGINEER FOR APPROVAL. ANCHORAGE MUST PROVIDE AN ULTIMATE PULL OUT STRENGTH OF 15 KIPS PER ANCHORAGE.

APPLY AN APPROVED SEALER TO THE SIDES OF THE BEAM NEAR EACH END PER THE SPECIAL PROVISIONS.

① MINIMUM CONCRETE STRENGTH AT TIME OF PRESTRESS TRANSFER.

② MINIMUM CONCRETE STRENGTH WHEN BEAM CAN BE TRANSPORTED AND INSTALLED.

③ DRAPED STRANDS.

④ STRAIGHT STRANDS.

⑤ USE 0.6" DIA. 7-WIRE LOW RELAXATION PRESTRESSING STRAND, CONFORMING TO ASTM A416, GRADE 270.

⑥ ~~FOR INTEGRAL ABUTMENT, SOLE PLATE CAN BE ELIMINATED OR REPLACED WITH AN APPROVED PROTECTION PLATE. BEAMS DETAILED TO INCLUDE A TAPERED PLATE PER STANDARD FIGURE B309 MUST INCLUDE SOLE PLATE.~~

⑦ CENTER OF GRAVITY OF HOLD DOWNS WHEN MULTIPLE HOLD DOWNS ARE USED.

⑧ DIMENSION DETERMINED BY CONTRACTOR. MAINTAIN 2" MINIMUM CLEAR FROM STRANDS.

⑨ TWO INSIDE BARS MAY BE PLACED ADJACENT TO VERTICAL STIRRUP FOR TYING CONVENIENCE.

⑩ STEEL TROWEL TO SMOOTH FINISH AND APPLY BOND BREAKER PER APPROVED PRODUCTS LIST.

⑪ ROUGH FLOAT AND BROOM TRANSVERSELY FOR BOND PER SPEC. 2405.3.D.

⑫ OPTIONAL: 3" MAX. DIA. SLEEVE FOR HAULING (AFTER INSTALLATION, COAT WITH APPROVED EPOXY BONDING AGENT & FILL WITH APPROVED NON-SHRINK GROUT).

⑬ TYP. CLR. FOR ENTIRE BOTTOM FLANGE.

DRAFT-WORK IN PROCESS

REVISED: DECEMBER 02, 2015

APPROVED: JANUARY 13, 2015
Nancy Daubenberger
STATE BRIDGE ENGINEER

CERTIFIED BY _____ LICENSED PROFESSIONAL ENGINEER ---- DATE

NAME: ENGINEER _____ LIC. NO. ---

TITLE: MN54" PRESTRESSED CONCRETE BEAM (PRETENSIONED) MN54-90

BEAM B5-B6

FIG. 5-397.508

DES: BAW	DR: LMT	APPROVED:
CHK: BLF	CHK: BLF	

SHEET NO. 54 OF 118 SHEETS

BRIDGE NO. R0697

Jan, 18 2016 01:42 pm V:\3400_ADC\CAD\SEGMENT E4\PLAN SHEETS\STRUCTURES\R0697\CBRR0697-BRG-PCB-001.dwg By: lisa.thompson

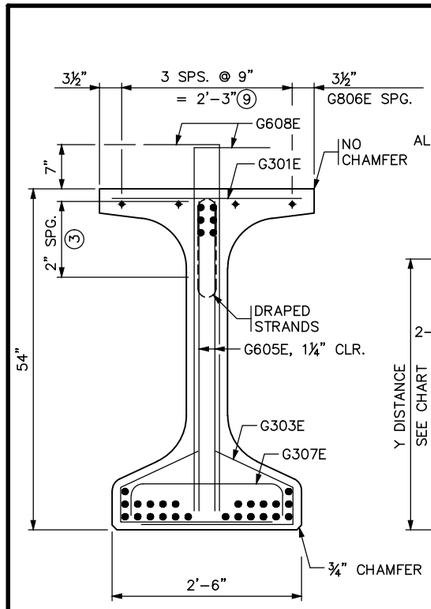

END VIEW

CUT STRANDS FLUSH WITH CONCRETE. COVER ENDS WITH SEALANT PER APPROVED PRODUCTS LIST "BRIDGE-PRESTRESSED BEAMS-CUT STRAND SEALANT."

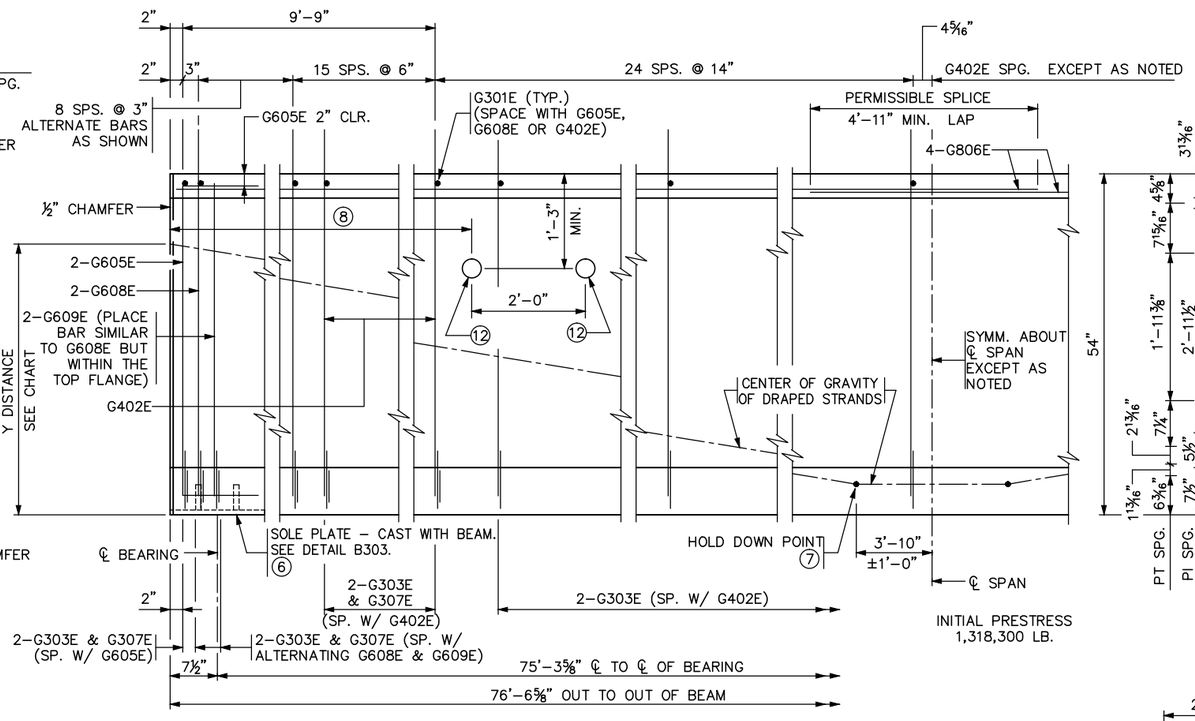

BEAM ELEVATION

INITIAL PRESTRESS 1,318,300 LB.

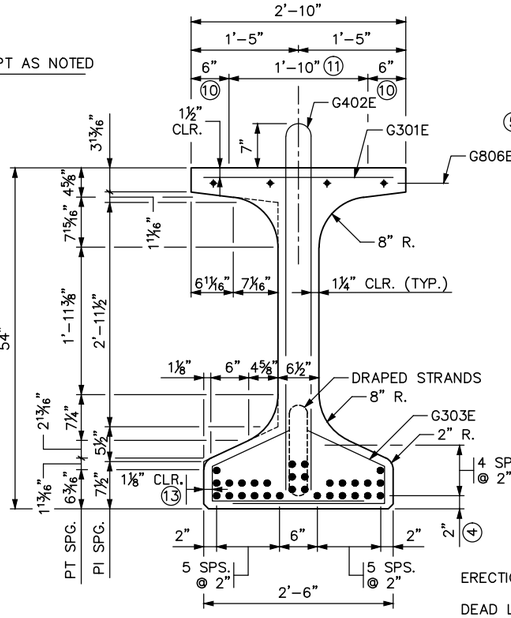

SECTION AT ℄ SPAN

Y DISTANCES (INCHES)	NO.	℄ SPAN	END
STRAIGHT STRANDS	24	3.17	
DRAPED STRANDS	6	5	49.00 ▫
(5) TOTAL STRANDS	30	3.53	

Y = DISTANCE TO CENTER OF GRAVITY OF STRANDS FROM BOTTOM OF BEAM. ALL STRANDS SPACED 2" CENTER TO CENTER, HORIZONTALLY AND VERTICALLY, EXCEPT AS NOTED.

▫ A TOLERANCE OF ±1" WILL BE PERMITTED IN THIS DIMENSION.

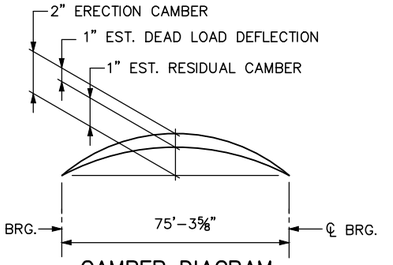

CAMBER DIAGRAM

ERECTION CAMBER SHOWN IS AFTER DIAPHRAGMS ARE IN PLACE.

DEAD LOAD DEFLECTION SHOWN IS FOR WEIGHT OF SLAB, WEARING COURSE, BARRIER, SIDEWALK AND MEDIAN WHERE APPLICABLE.

CONTRACTOR WILL TAKE ELEVATIONS AT TOP OF BEAMS AFTER ERECTION AND WILL ALLOW FOR DEFLECTION SHOWN TO ENABLE BUILDING FORMS TO CORRECT GRADE AND SPECIFIED SLAB THICKNESS. PROVIDE COPY OF ELEVATIONS TO THE ENGINEER.

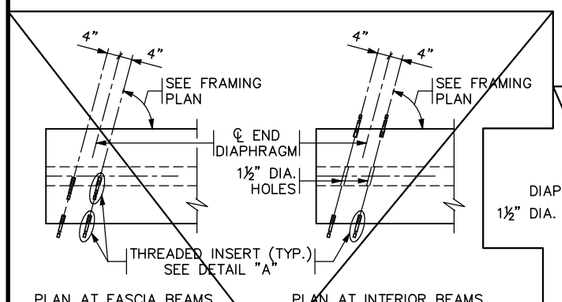

CONCRETE END DIAPHRAGM

PARAPET ABUTMENT
(SEE DETAIL B814 FOR DIAPHRAGM DETAILS)

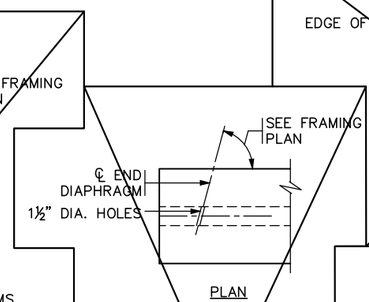

CONCRETE END DIAPHRAGM

SEE SUPERSTRUCTURE DETAILS AND REINFORCEMENT FOR DIAPHRAGM DETAILS

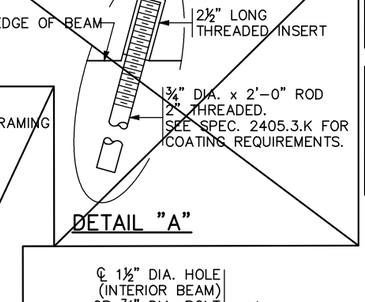

DETAIL "A"

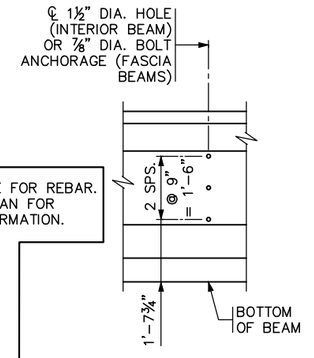

STEEL INTERMEDIATE DIAPHRAGM

(SEE DETAIL B403 FOR DIAPHRAGM DETAILS)

CALCULATED PRESTRESS LOSSES	
ELASTIC SHORTENING LOSS	19.21 KSI
LONG TERM LOSSES	20.35 KSI
TOTAL LOSSES	39.56 KSI

MINIMUM CONCRETE STRENGTH - K.S.I.	
① f'ci	② f'c
7.0 KSI	8.0 KSI

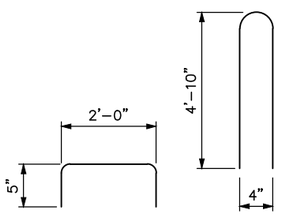

G307E G402E

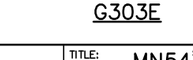

G301E

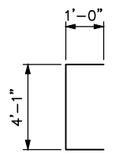

G605E

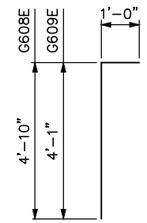

G608E & G609E

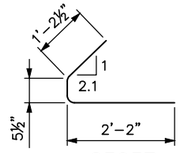

G303E

GENERAL NOTES

PROVIDE HANDLING HOOKS OR DEVICES AS REQUIRED BY CONTRACTOR.

MARK EACH BEAM SHOWING BRIDGE NUMBER, CASTING DATE, AND INDIVIDUAL IDENTIFICATION LETTERS AND NUMBERS ON THE FACE OF THE BEAM, NEAR THE END, SO LOCATED THAT THEY WILL BE EXPOSED AFTER THE END DIAPHRAGMS HAVE BEEN CAST. MARK FASCIA BEAMS ON THE INSIDE FACE. ENSURE ALL MARKINGS ARE STENCILLED AND CLEARLY LEGIBLE. FOR LOCATION OF BEAMS, SEE FRAMING PLAN.

~~ALL MATERIAL AND WORK SHOWN OR NOTED ON THIS SHEET IS INCLUDED IN UNIT PRICE BID FOR PRESTRESSED CONCRETE BEAMS. SEE SPEC. 2405.~~

SEE FRAMING PLAN FOR BEAM END MARKED "X" AND DIAPHRAGM SPACING.

AS AN ALTERNATE TO THE END DIAPHRAGM ANCHORAGES SHOWN, THE CONTRACTOR MAY SUBMIT DETAILS OF A CAST-IN-PLACE ANCHORAGE TO THE ENGINEER FOR APPROVAL. ANCHORAGE MUST PROVIDE AN ULTIMATE PULL OUT STRENGTH OF 15 KIPS PER ANCHORAGE.

APPLY AN APPROVED SEALER TO THE SIDES OF THE BEAM NEAR EACH END PER THE SPECIAL PROVISIONS.

① MINIMUM CONCRETE STRENGTH AT TIME OF PRESTRESS TRANSFER.

② MINIMUM CONCRETE STRENGTH WHEN BEAM CAN BE TRANSPORTED AND INSTALLED.

③ DRAPED STRANDS.

④ STRAIGHT STRANDS.

⑤ USE 0.6" DIA. 7-WIRE LOW RELAXATION PRESTRESSING STRAND, CONFORMING TO ASTM A416, GRADE 270.

⑥ ~~FOR INTEGRAL ABUTMENT, SOLE PLATE CAN BE ELIMINATED OR REPLACED WITH AN APPROVED PROTECTION PLATE. BEAMS DETAILED TO INCLUDE A TAPERED PLATE PER STANDARD FIGURE B309 MUST INCLUDE SOLE PLATE.~~

⑦ CENTER OF GRAVITY OF HOLD DOWNS WHEN MULTIPLE HOLD DOWNS ARE USED.

⑧ DIMENSION DETERMINED BY CONTRACTOR. MAINTAIN 2" MINIMUM CLEAR FROM STRANDS.

⑨ TWO INSIDE BARS MAY BE PLACED ADJACENT TO VERTICAL STIRRUP FOR TYING CONVENIENCE.

⑩ STEEL TROWEL TO SMOOTH FINISH AND APPLY BOND BREAKER PER APPROVED PRODUCTS LIST.

⑪ ROUGH FLOAT AND BROOM TRANSVERSELY FOR BOND PER SPEC. 2405.3.D.

⑫ OPTIONAL: 3" MAX. DIA. SLEEVE FOR HAULING (AFTER INSTALLATION, COAT WITH APPROVED EPOXY BONDING AGENT & FILL WITH APPROVED NON-SHRINK GROUT).

⑬ TYP. CLR. FOR ENTIRE BOTTOM FLANGE.

DRAFT-WORK IN PROCESS

REVISED: DECEMBER 02, 2015

APPROVED: JANUARY 13, 2015

Nancy Daubenberger
STATE BRIDGE ENGINEER

CERTIFIED BY _____ LICENSED PROFESSIONAL ENGINEER ___ DATE

NAME: ENGINEER _____ LIC. NO. ---

TITLE: MN54" PRESTRESSED CONCRETE BEAM (PRETENSIONED) MN54-77

BEAM B7-B9

FIG. 5-397.508

DES: BAW	DR: LMT	APPROVED:
CHK: BLF	CHK: BLF	

SHEET NO. 55 OF 118 SHEETS

BRIDGE NO. R0697

Jan, 18 2016 01:42 pm V:\3400_ADC\CAD\SEGMENT E4\PLAN SHEETS\STRUCTURES\R0697\CBRR0697-BRG-PCB-001.dwg By: lisa.thompson

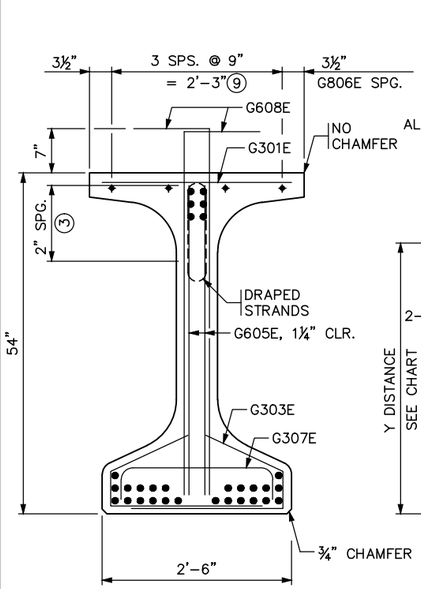

END VIEW

CUT STRANDS FLUSH WITH CONCRETE. COVER ENDS WITH SEALANT PER APPROVED PRODUCTS LIST "BRIDGE-PRESTRESSED BEAMS-CUT STRAND SEALANT."

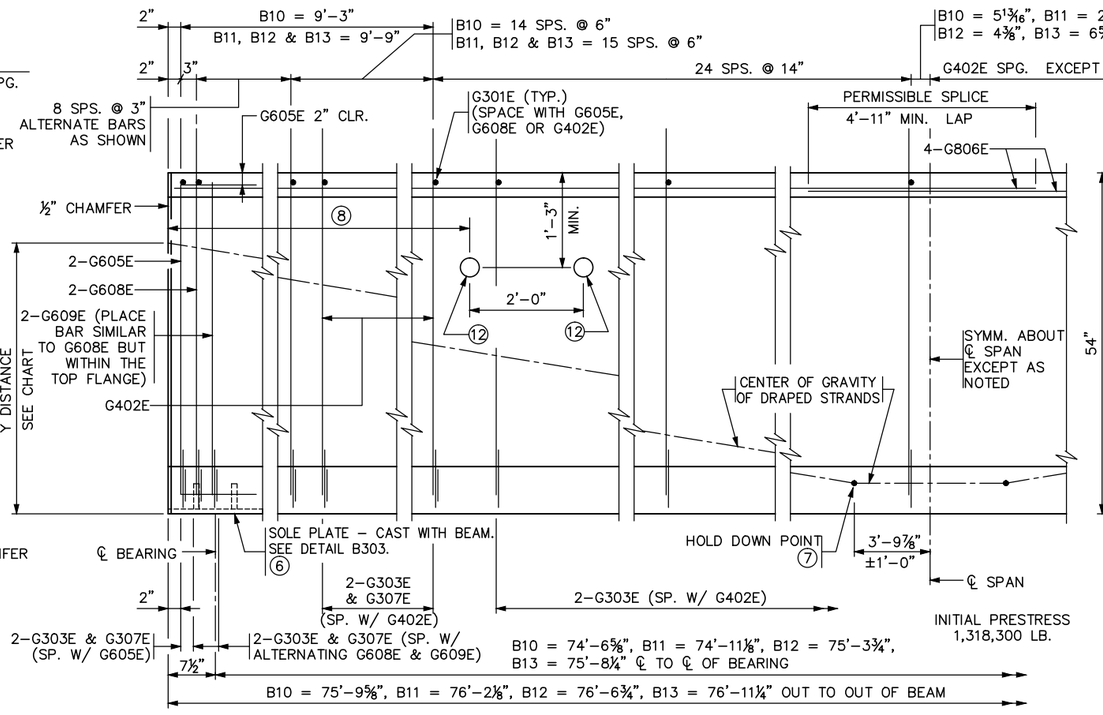

BEAM ELEVATION

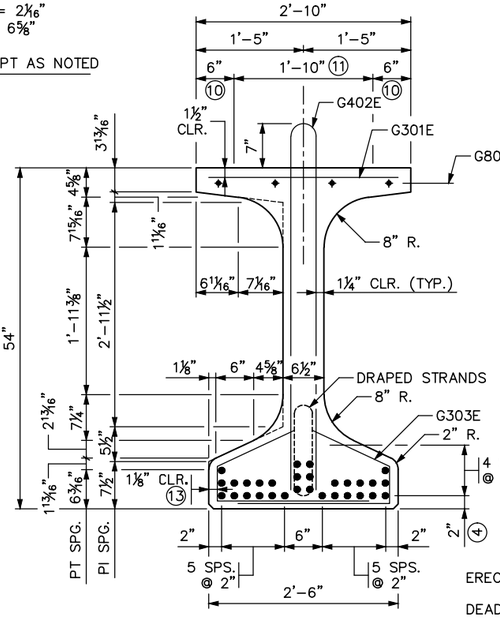

SECTION AT ℄ SPAN

Y DISTANCES (INCHES)	NO.	℄ SPAN	END
STRAIGHT STRANDS	24	3.17	
DRAPED STRANDS	6	5	49.00 ▫
(5) TOTAL STRANDS	30	3.53	

Y = DISTANCE TO CENTER OF GRAVITY OF STRANDS FROM BOTTOM OF BEAM. ALL STRANDS SPACED 2" CENTER TO CENTER, HORIZONTALLY AND VERTICALLY, EXCEPT AS NOTED.

▫ A TOLERANCE OF ±1" WILL BE PERMITTED IN THIS DIMENSION.

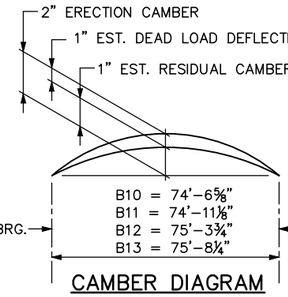

CAMBER DIAGRAM

ERECTION CAMBER SHOWN IS AFTER DIAPHRAGMS ARE IN PLACE.

DEAD LOAD DEFLECTION SHOWN IS FOR WEIGHT OF SLAB, WEARING COURSE, BARRIER, SIDEWALK AND MEDIAN WHERE APPLICABLE.

CONTRACTOR WILL TAKE ELEVATIONS AT TOP OF BEAMS AFTER ERECTION AND WILL ALLOW FOR DEFLECTION SHOWN TO ENABLE BUILDING FORMS TO CORRECT GRADE AND SPECIFIED SLAB THICKNESS. PROVIDE COPY OF ELEVATIONS TO THE ENGINEER.

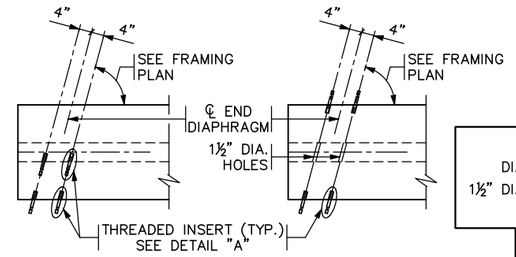

PLAN AT FASCIA BEAMS

PLAN AT INTERIOR BEAMS

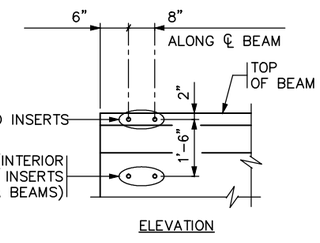

ELEVATION

CONCRETE END DIAPHRAGM

PARAPET ABUTMENT
(SEE DETAIL B814 FOR DIAPHRAGM DETAILS)

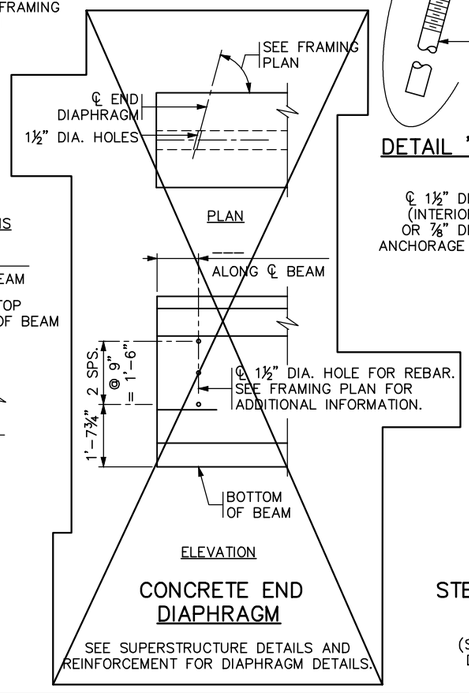

ELEVATION

CONCRETE END DIAPHRAGM

SEE SUPERSTRUCTURE DETAILS AND REINFORCEMENT FOR DIAPHRAGM DETAILS.

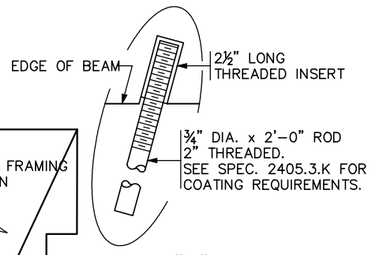

DETAIL "A"

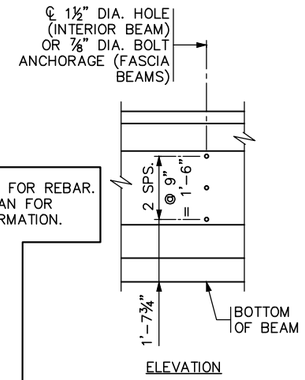

ELEVATION

STEEL INTERMEDIATE DIAPHRAGM

(SEE DETAIL B403 FOR DIAPHRAGM DETAILS)

CALCULATED PRESTRESS LOSSES	
ELASTIC SHORTENING LOSS	19.21 KSI
LONG TERM LOSSES	20.35 KSI
TOTAL LOSSES	39.56 KSI

MINIMUM CONCRETE STRENGTH - K.S.I.	
① f'ci	② f'c
7.0 KSI	8.0 KSI

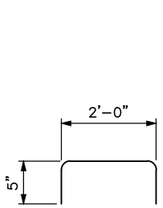

G307E

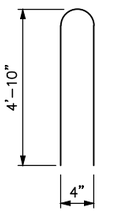

G402E

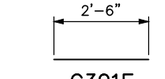

G301E

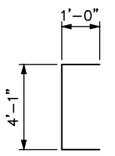

G605E

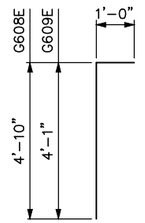

G608E & G609E

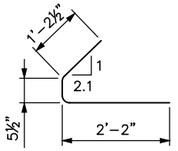

G303E

GENERAL NOTES

PROVIDE HANDLING HOOKS OR DEVICES AS REQUIRED BY CONTRACTOR.

MARK EACH BEAM SHOWING BRIDGE NUMBER, CASTING DATE, AND INDIVIDUAL IDENTIFICATION LETTERS AND NUMBERS ON THE FACE OF THE BEAM, NEAR THE END, SO LOCATED THAT THEY WILL BE EXPOSED AFTER THE END DIAPHRAGMS HAVE BEEN CAST. MARK FASCIA BEAMS ON THE INSIDE FACE. ENSURE ALL MARKINGS ARE STENCILLED AND CLEARLY LEGIBLE. FOR LOCATION OF BEAMS, SEE FRAMING PLAN.

~~ALL MATERIAL AND WORK SHOWN OR NOTED ON THIS SHEET IS INCLUDED IN UNIT PRICE BID FOR PRESTRESSED CONCRETE BEAMS. SEE SPEC. 2405.~~

SEE FRAMING PLAN FOR BEAM END MARKED "X" AND DIAPHRAGM SPACING.

AS AN ALTERNATE TO THE END DIAPHRAGM ANCHORAGES SHOWN, THE CONTRACTOR MAY SUBMIT DETAILS OF A CAST-IN-PLACE ANCHORAGE TO THE ENGINEER FOR APPROVAL. ANCHORAGE MUST PROVIDE AN ULTIMATE PULL OUT STRENGTH OF 15 KIPS PER ANCHORAGE.

APPLY AN APPROVED SEALER TO THE SIDES OF THE BEAM NEAR EACH END PER THE SPECIAL PROVISIONS.

① MINIMUM CONCRETE STRENGTH AT TIME OF PRESTRESS TRANSFER.

② MINIMUM CONCRETE STRENGTH WHEN BEAM CAN BE TRANSPORTED AND INSTALLED.

③ DRAPED STRANDS.

④ STRAIGHT STRANDS.

⑤ USE 0.6" DIA. 7-WIRE LOW RELAXATION PRESTRESSING STRAND, CONFORMING TO ASTM A416, GRADE 270.

⑥ ~~FOR INTEGRAL ABUTMENT, SOLE PLATE CAN BE ELIMINATED OR REPLACED WITH AN APPROVED PROTECTION PLATE. BEAMS DETAILED TO INCLUDE A TAPERED PLATE PER STANDARD FIGURE B309 MUST INCLUDE SOLE PLATE.~~

⑦ CENTER OF GRAVITY OF HOLD DOWNS WHEN MULTIPLE HOLD DOWNS ARE USED.

⑧ DIMENSION DETERMINED BY CONTRACTOR. MAINTAIN 2" MINIMUM CLEAR FROM STRANDS.

⑨ TWO INSIDE BARS MAY BE PLACED ADJACENT TO VERTICAL STIRRUP FOR TYING CONVENIENCE.

⑩ STEEL TROWEL TO SMOOTH FINISH AND APPLY BOND BREAKER PER APPROVED PRODUCTS LIST.

⑪ ROUGH FLOAT AND BROOM TRANSVERSELY FOR BOND PER SPEC. 2405.3.D.

⑫ OPTIONAL: 3" MAX. DIA. SLEEVE FOR HAULING (AFTER INSTALLATION, COAT WITH APPROVED EPOXY BONDING AGENT & FILL WITH APPROVED NON-SHRINK GROUT).

⑬ TYP. CLR. FOR ENTIRE BOTTOM FLANGE.

DRAFT-WORK IN PROCESS

REVISED: DECEMBER 02, 2015

APPROVED: JANUARY 13, 2015

Nancy Dorbenberger
STATE BRIDGE ENGINEER

CERTIFIED BY _____ LICENSED PROFESSIONAL ENGINEER ---- DATE

NAME: ENGINEER _____ LIC. NO. ---

TITLE: MN54" PRESTRESSED CONCRETE BEAM (PRETENSIONED) MN54-77

BEAM B10-B13

FIG. 5-397.508

DES: BAW	DR: LMT	APPROVED:
CHK: BLF	CHK: BLF	

SHEET NO. 56 OF 118 SHEETS

BRIDGE NO. R0697

Jan, 18 2016 01:42 pm V:\3400_ADC\CAD\SEGMENT E4\PLAN SHEETS\STRUCTURES\R0697\CBRR0697-BRG-PCB-001.dwg By: lisa.thompson

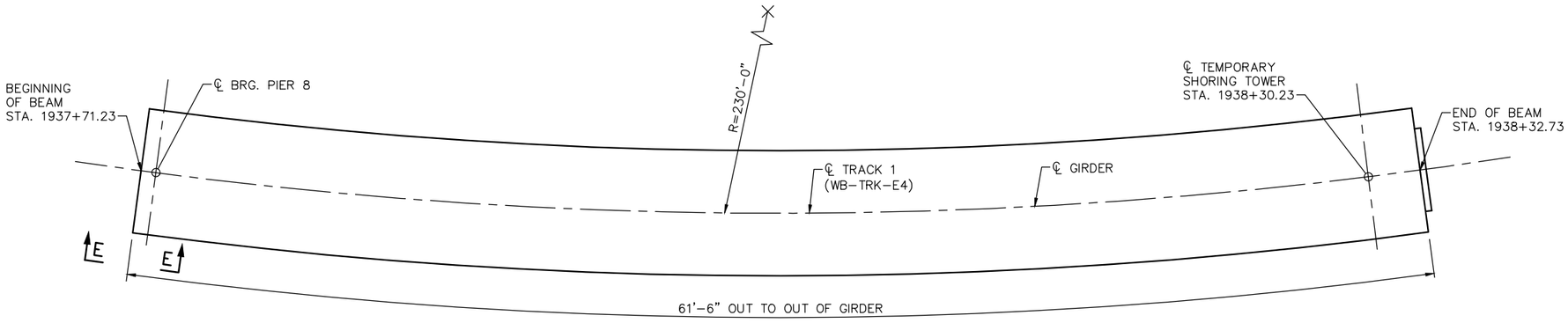

WEST GIRDER PLAN

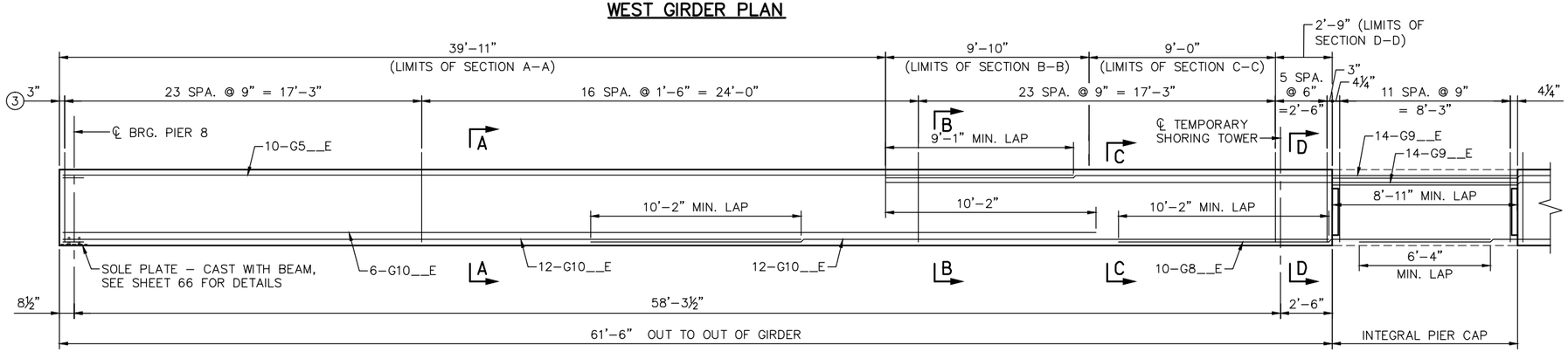

WEST GIRDER ELEVATION AT CENTERLINE ④

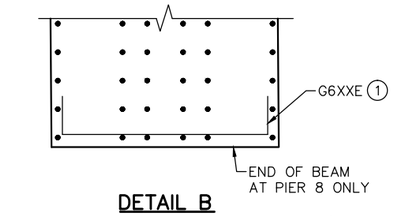

DETAIL B
(PLAN VIEW SHOWING PLACEMENT OF XX BAR)

NOTES:

GIRDER 9W TO BE CAST-IN-PLACE.

FOR LOCATIONS OF BEAMS, SEE FRAMING PLAN.

6 KSI MINIMUM CONCRETE STRENGTH.

CAMBER GIRDER FORM ACCORDING TO CAMBER DIAGRAM TO PROVIDE FOR ALL DEAD LOAD LOAD DEFLECTIONS. SEE SHEET 61 FOR CAMBER DIAGRAM.

SEE SHEET 62 FOR SECTION E-E.

SEE SHEET 66 FOR GIRDER END VIEW.

① PROVIDE 2" CLEARANCE AT END OF BEAM AT PIER 8.

② ROUGH FLOAT AND BROOM TRANSVERSELY FOR BOND PER MnDOT SPEC. 2405.3.D.

③ G601E, G602E, G603E, AND G604E STIRRUP SPACING.

④ SKIN REINFORCING NOT SHOWN. 2'-4" MIN. LAP.

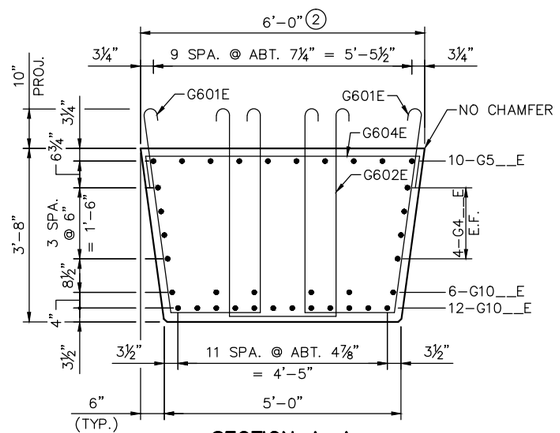

SECTION A-A

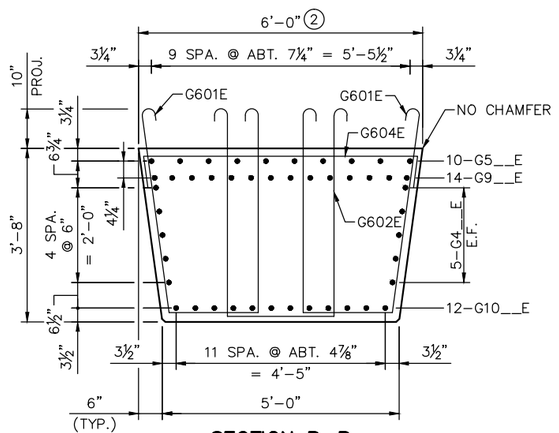

SECTION B-B

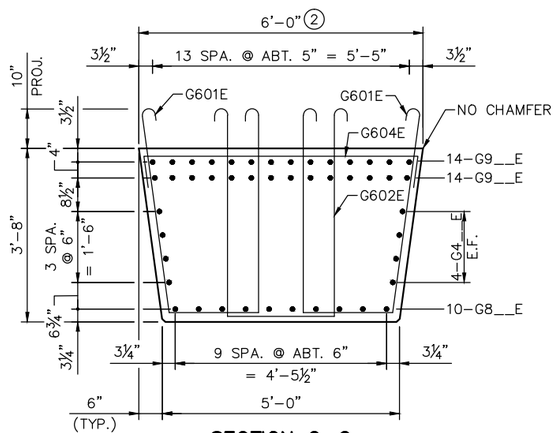

SECTION C-C

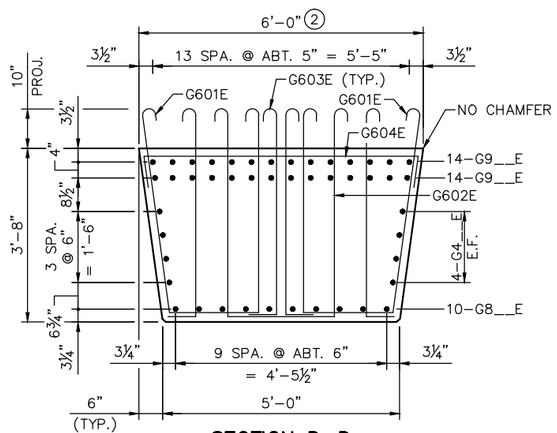

SECTION D-D

BEAM 9W

NO.	DATE	BY	CHECK	DESIGN	REVISION / SUBMITTAL

DESIGNED BY: TDR | CHECKED BY: EJT
DRAWN BY: LMT | CHECKED BY: EJT

AECOM Kimley»Horn

90% SUBMISSION - 01/22/16

METROPOLITAN COUNCIL

SOUTHWEST Green Line LRT Extension

CIVIL - VOLUME 4G
LRT OVER BNSF
BRIDGE R0697
CONCRETE GIRDER DETAILS 1

DISCIPLINE: STRUCTURES
SHEET NAME: CBRR0697-BRG-GIR-001-1

SHEET 57 OF 118

Jan, 18 2016 01:42 pm v:\3400_ADC\CAD\SEGMENT E4\PLAN SHEETS\STRUCTURES\R0697\CBRR0697-BRG-GIR-001.dwg By: lisa.thompson

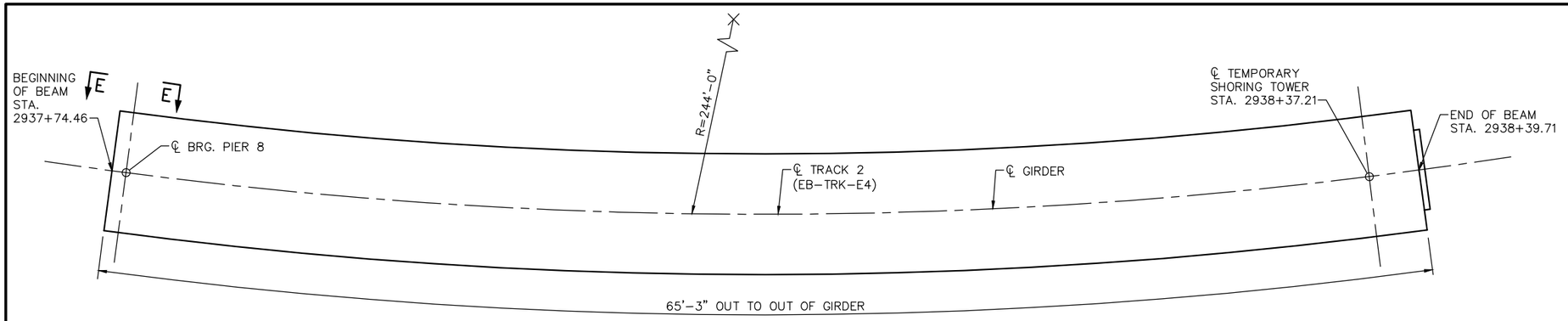

EAST GIRDER PLAN

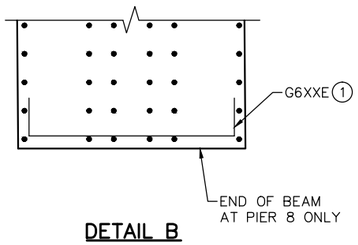

DETAIL B

(PLAN VIEW SHOWING PLACEMENT OF XX BAR)

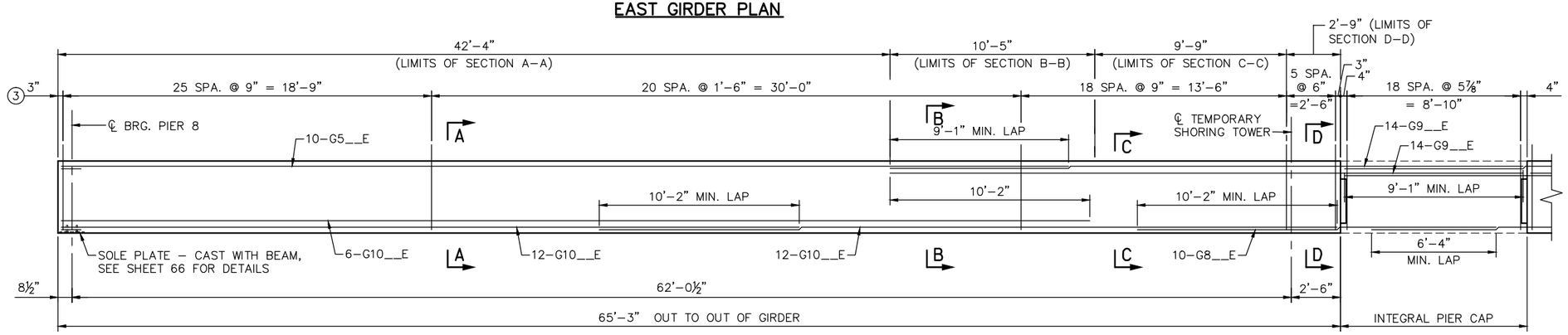

EAST GIRDER ELEVATION AT CENTERLINE (4)

NOTES:

GIRDER 9E TO BE CAST-IN-PLACE.

FOR LOCATIONS OF BEAMS, SEE FRAMING PLAN.

6 KSI MINIMUM CONCRETE STRENGTH.

CAMBER GIRDER FORM ACCORDING TO CAMBER DIAGRAM TO PROVIDE FOR ALL DEAD LOAD LOAD DEFLECTIONS. SEE SHEET 61 FOR CAMBER DIAGRAM.

SEE SHEET 62 FOR SECTION E-E.

SEE SHEET 66 FOR GIRDER END VIEW.

(1) PROVIDE 2" CLEARANCE AT END OF BEAM AT PIER 8.

(2) ROUGH FLOAT AND BROOM TRANSVERSELY FOR BOND PER MnDOT SPEC. 2405.3.D.

(3) G601E, G602E, G603E, AND G604E STIRRUP SPACING.

(4) SKIN REINFORCING NOT SHOWN. 2'-4" MIN. LAP.

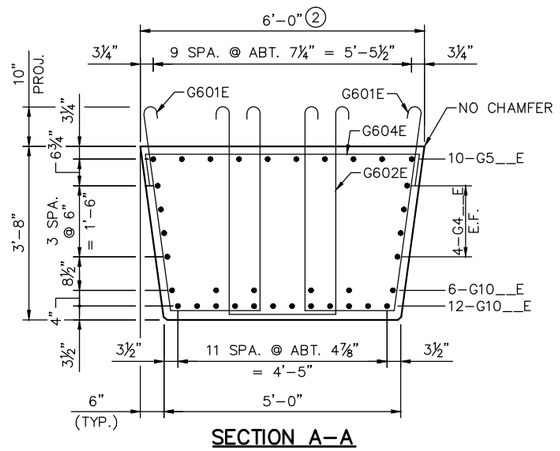

SECTION A-A

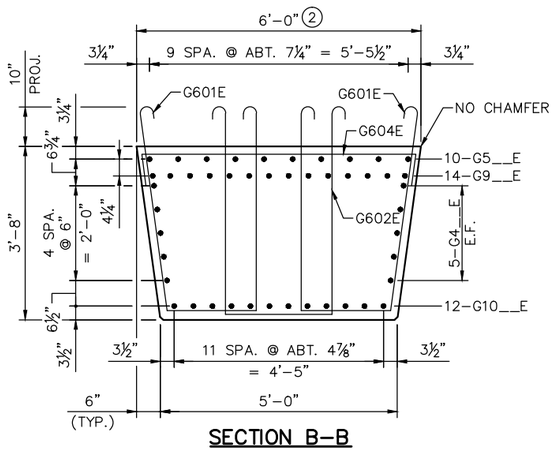

SECTION B-B

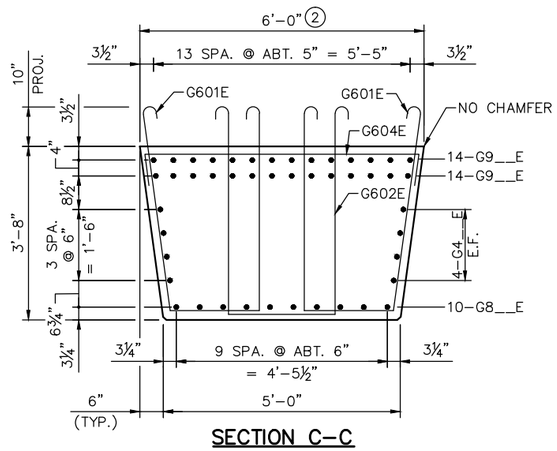

SECTION C-C

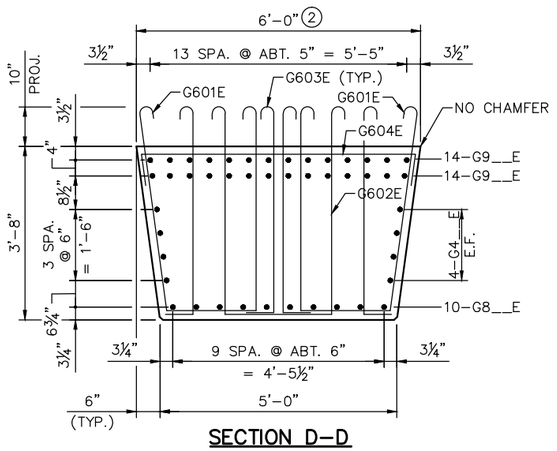

SECTION D-D

BEAM 9E

NO.	DATE	BY	CHECK	DESIGN	REVISION / SUBMITTAL

DESIGNED BY: TDR | CHECKED BY: EJT
DRAWN BY: LMT | CHECKED BY: EJT

AECOM Kimley»Horn

90% SUBMISSION - 01/22/16

METROPOLITAN COUNCIL

SOUTHWEST Green Line LRT Extension

CIVIL - VOLUME 4G
LRT OVER BNSF
BRIDGE R0697
CONCRETE GIRDER DETAILS 2

DISCIPLINE: STRUCTURES
SHEET NAME: CBRR0697-BRG-GIR-001-2

SHEET 58 OF 118

Jan, 18 2016 01:42 pm v:\3400_ADC\CAD\SEGMENT E4\PLAN SHEETS\STRUCTURES\R0697\CBRR0697-BRG-GIR-001.dwg By: lisa.thompson

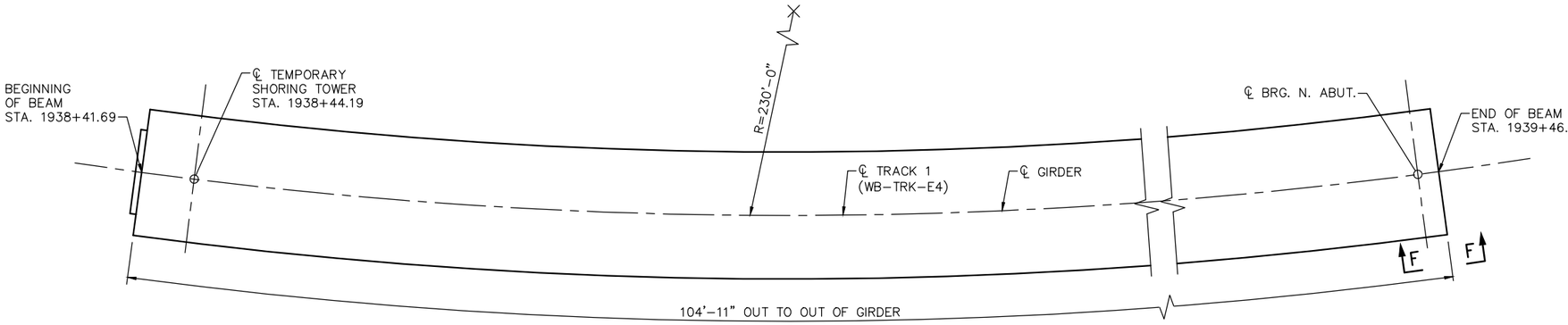

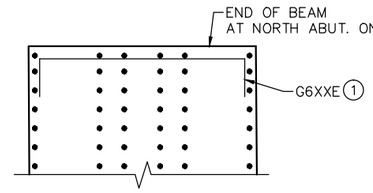

DETAIL B
(PLAN VIEW SHOWING PLACEMENT OF XX BAR)

WEST GIRDER PLAN

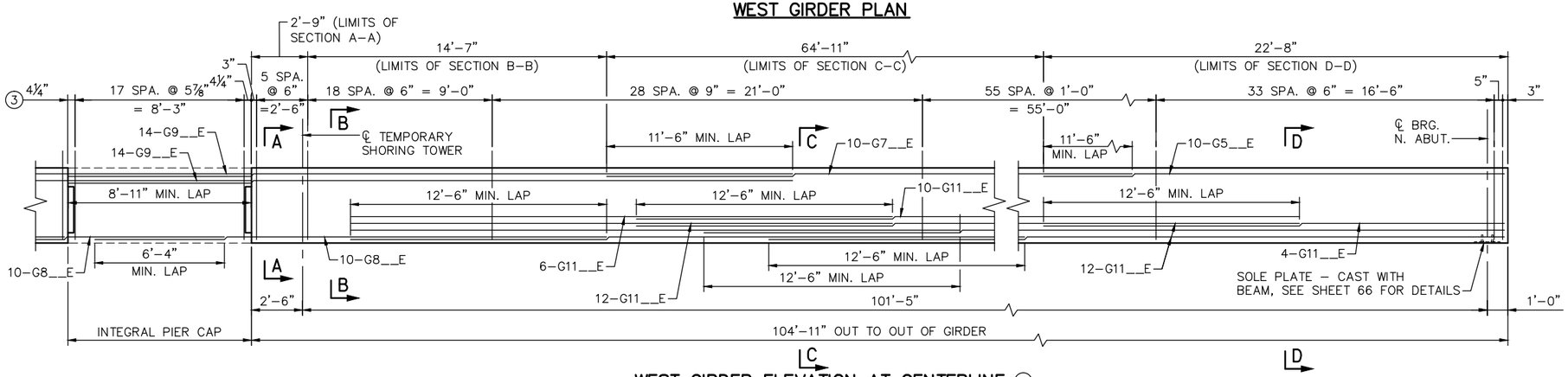

WEST GIRDER ELEVATION AT CENTERLINE ④

NOTES:

GIRDER 10W TO BE PRECAST ON-SITE. SEE STAGING PLANS FOR PROPOSED CASTING LOCATION.

PROVIDE HANDLING STRAPS TO LIFT GIRDER INTO PLACE.

FOR LOCATIONS OF BEAMS, SEE FRAMING PLAN.

6 KSI MINIMUM CONCRETE STRENGTH.

CAMBER GIRDER FORM ACCORDING TO CAMBER DIAGRAM TO PROVIDE FOR ALL DEAD LOAD LOAD DEFLECTIONS. SEE SHEET 61 FOR CAMBER DIAGRAM.

SEE SHEET 65 FOR SECTION F-F.

SEE SHEET 66 FOR GIRDER END VIEW.

(1) PROVIDE 2" CLEARANCE AT END OF BEAM AT NORTH ABUTMENT.

(2) ROUGH FLOAT AND BROOM TRANSVERSELY FOR BOND PER MnDOT SPEC. 2405.3.D.

(3) G601E, G602E, G603E, AND G604E STIRRUP SPACING.

(4) SKIN REINFORCING NOT SHOWN. 2'-4" MIN. LAP.

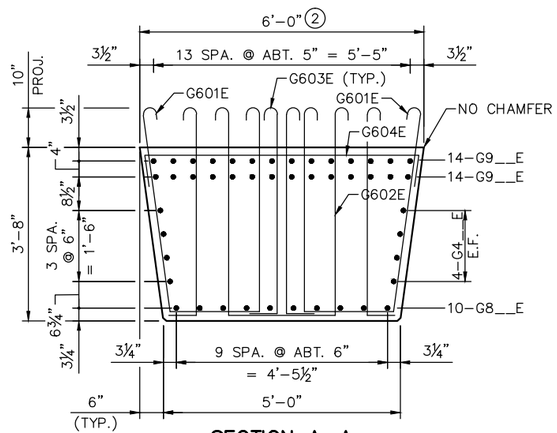

SECTION A-A

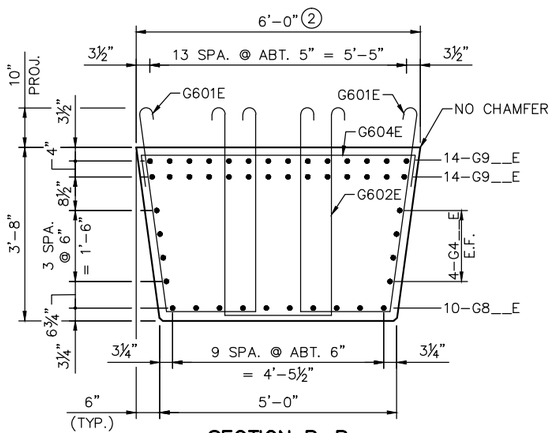

SECTION B-B

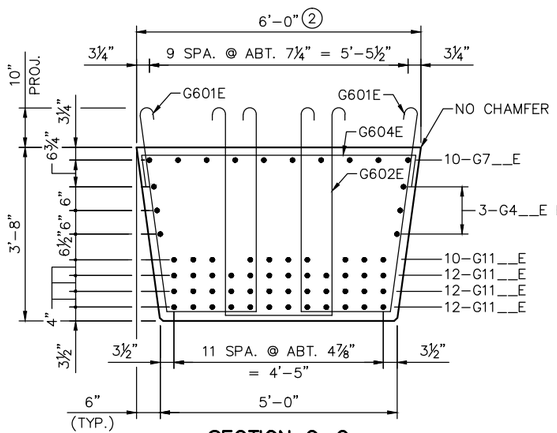

SECTION C-C

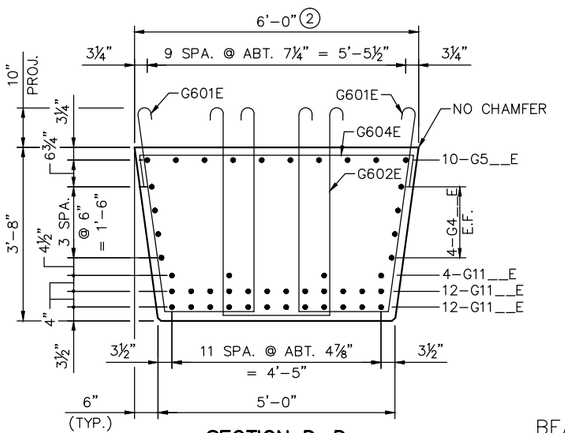

SECTION D-D

BEAM 10W

NO.	DATE	BY	CHECK	DESIGN	REVISION / SUBMITTAL

DESIGNED BY: TDR | CHECKED BY: EJT
DRAWN BY: LMT | CHECKED BY: EJT

AECOM Kimley»Horn

90% SUBMISSION - 01/22/16

METROPOLITAN COUNCIL

SOUTHWEST Green Line LRT Extension

CIVIL - VOLUME 4G
LRT OVER BNSF
BRIDGE R0697
CONCRETE GIRDER DETAILS 3

DISCIPLINE: STRUCTURES
SHEET NAME: CBRR0697-BRG-GIR-001-3

SHEET 59 OF 118

Jan, 18 2016 01:42 pm V:\3400_ADC\CAD\SEGMENT E4\PLAN SHEETS\STRUCTURES\R0697\CBRR0697-BRG-GIR-001.dwg By: lisa.thompson

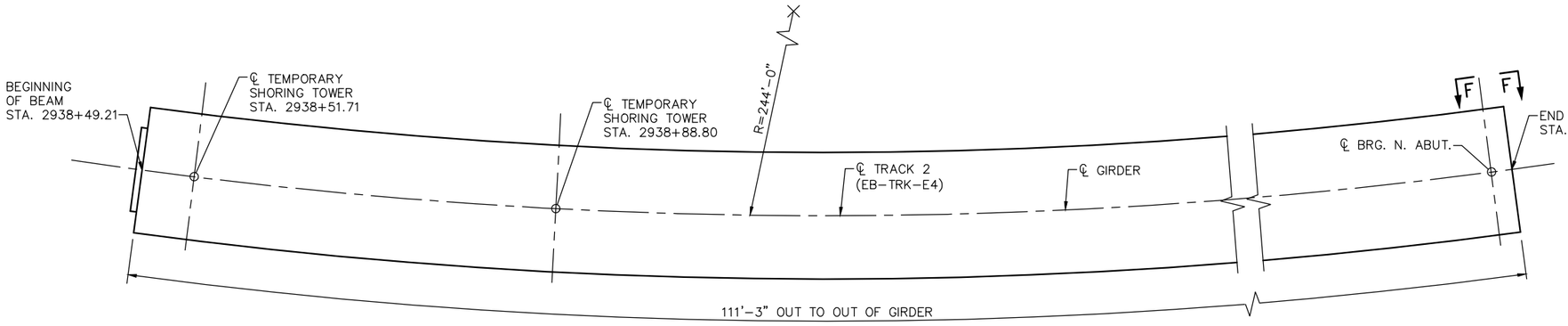

EAST GIRDER PLAN

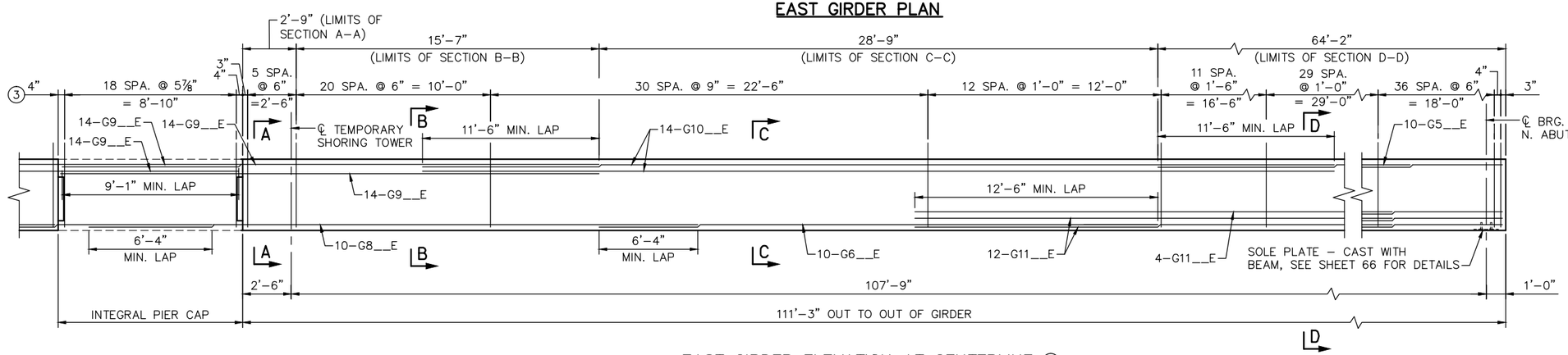

EAST GIRDER ELEVATION AT CENTERLINE ④

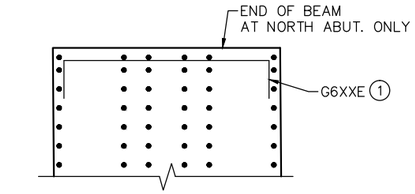

DETAIL B

(PLAN VIEW SHOWING PLACEMENT OF XX BAR)

NOTES:

GIRDER 10E TO BE PRECAST ON-SITE. SEE STAGING PLANS FOR PROPOSED CASTING LOCATION.

PROVIDE HANDLING STRAPS TO LIFT GIRDER INTO PLACE.

FOR LOCATIONS OF BEAMS, SEE FRAMING PLAN.

6 KSI MINIMUM CONCRETE STRENGTH.

CAMBER GIRDER FORM ACCORDING TO CAMBER DIAGRAM TO PROVIDE FOR ALL DEAD LOAD LOAD DEFLECTIONS. SEE SHEET 61 FOR CAMBER DIAGRAM.

SEE SHEET 65 FOR SECTION F-F.

SEE SHEET 66 FOR GIRDER END VIEW.

① PROVIDE 2" CLEARANCE AT END OF BEAM AT NORTH ABUTMENT.

② ROUGH FLOAT AND BROOM TRANSVERSELY FOR BOND PER MnDOT SPEC. 2405.3.D.

③ G601E, G602E, G603E, AND G604E STIRRUP SPACING.

④ SKIN REINFORCING NOT SHOWN. 2'-4" MIN. LAP.

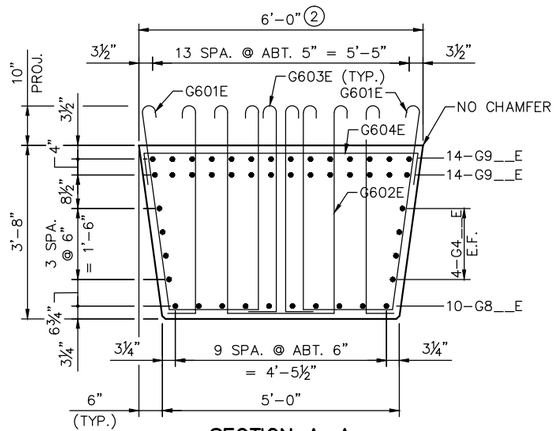

SECTION A-A

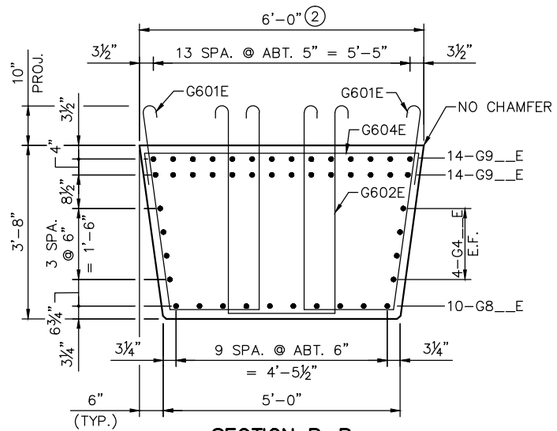

SECTION B-B

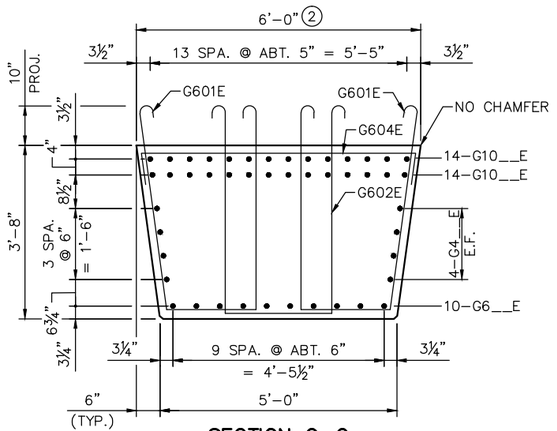

SECTION C-C

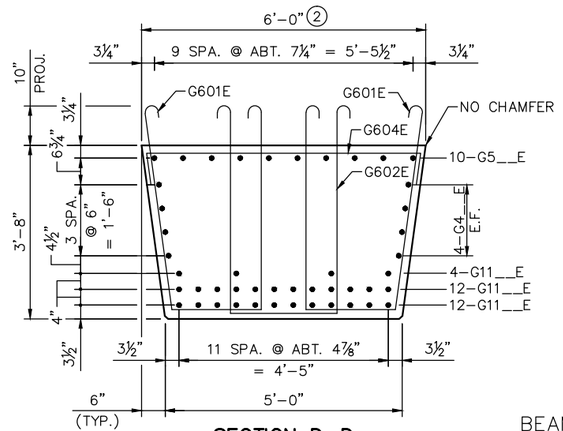

SECTION D-D

BEAM 10E

NO.	DATE	BY	CHECK	DESIGN	REVISION / SUBMITTAL

DESIGNED BY: TDR | CHECKED BY: EJT
DRAWN BY: LMT | CHECKED BY: EJT

AECOM Kimley»Horn

90% SUBMISSION - 01/22/16

METROPOLITAN COUNCIL

SOUTHWEST Green Line LRT Extension

CIVIL - VOLUME 4G
LRT OVER BNSF
BRIDGE R0697
CONCRETE GIRDER DETAILS 4

DISCIPLINE: STRUCTURES
SHEET NAME: CBRR0697-BRG-GIR-001-4

SHEET 60 OF 118

Jan. 18 2016 01:43 pm v:\3400_ADC\CAD\SEGMENT E4\PLAN SHEETS\STRUCTURES\R0697\CBRR0697-BRG-GIR-001.dwg By: lisa.thompson

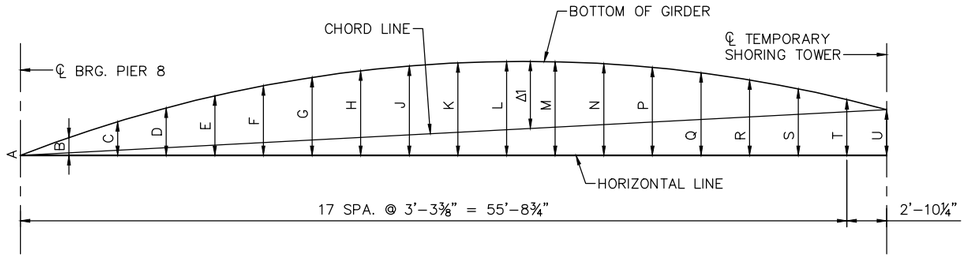

SPAN 9 CAMBER DIAGRAM

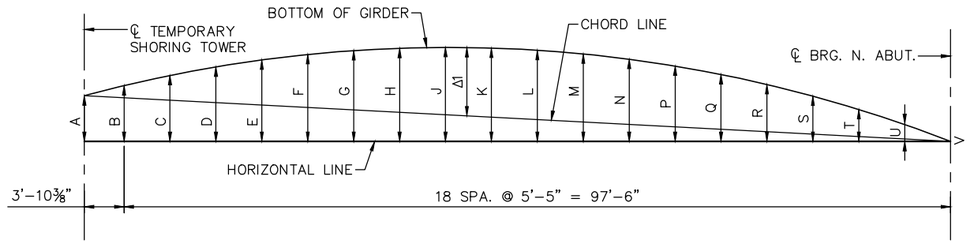

SPAN 10 CAMBER DIAGRAM

DIMENSIONS (SHOWN IN INCHES)																			
GIRDER	A	B	C	D	E	F	G	H	J	K	L	M	N	P	Q	R	S	T	U
9W	0	1/2	1	1 3/8	1 7/8	2 1/4	2 5/8	3	3 1/4	3 1/2	3 5/8	3 7/8	3 7/8	4	4 1/8	4 1/8	4 1/8	4 1/8	4
9E	0	1/2	1	1 1/2	2	2 3/8	2 3/4	3 1/8	3 3/8	3 5/8	3 7/8	4	4 1/8	4 1/8	4 1/8	4 1/4	4 1/8	4 1/8	4

MAXIMUM CAMBER IN SEGMENT	
GIRDER	Δ 1
9W	1 1/2
9E	1 5/8
10W	9 1/2
10E	7

DIMENSIONS (SHOWN IN INCHES)																				
GIRDER	A	B	C	D	E	F	G	H	J	K	L	M	N	P	Q	R	S	T	U	V
10W	11 1/8	11 5/8	12 3/8	13 1/8	13 7/8	14 1/2	15	15 1/4	15 3/8	15 1/4	14 7/8	14 1/8	13 1/4	12	10 1/2	8 3/4	6 3/4	4 5/8	2 3/8	0
10E	11 1/8	11 3/8	11 5/8	12	12 1/8	12 3/8	12 3/8	12 1/2	12 1/2	12 3/8	12 1/8	11 3/4	11 1/8	10 1/8	9	7 5/8	6	4 1/4	2 1/8	0

NOTES:

ENDS OF BEAMS SHALL BE VERTICAL.

CAMBER DIAGRAM FOR GIRDER FORMS SHOWN IS FOR BEAMS IN UNLOADED POSITION AND PROVIDES FOR ALL DEAD LOAD DEFLECTIONS.

CAMBER DIAGRAM CHORD LINES ARE STRAIGHT LINES FROM END TO END OF BEAM SEGMENTS AT BOTTOM OF GIRDER.

CAMBER DIAGRAM HORIZONTAL DIMENSIONS ARE SHOWN IN FEET. VERTICAL DIMENSIONS ARE SHOWN IN INCHES AND FRACTIONS OF INCHES.

NO.	DATE	BY	CHECK	DESIGN	REVISION / SUBMITTAL

DESIGNED BY: TDR | CHECKED BY: EJT
DRAWN BY: LMT | CHECKED BY: EJT

AECOM Kimley»Horn

90% SUBMISSION - 01/22/16

METROPOLITAN COUNCIL

SOUTHWEST Green Line LRT Extension

CIVIL - VOLUME 4G
LRT OVER BNSF
BRIDGE R0697
CONCRETE GIRDER DETAILS 5

DISCIPLINE: STRUCTURES
SHEET NAME: CBRR0697-BRG-GIR-001-5

SHEET 61 OF 118

Jan, 18 2016 01:43 pm V:\3400_ADC\CAD\SEGMENT E4\PLAN SHEETS\STRUCTURES\R0697\CBRR0697-BRG-GIR-001.dwg By: lisa.thompson

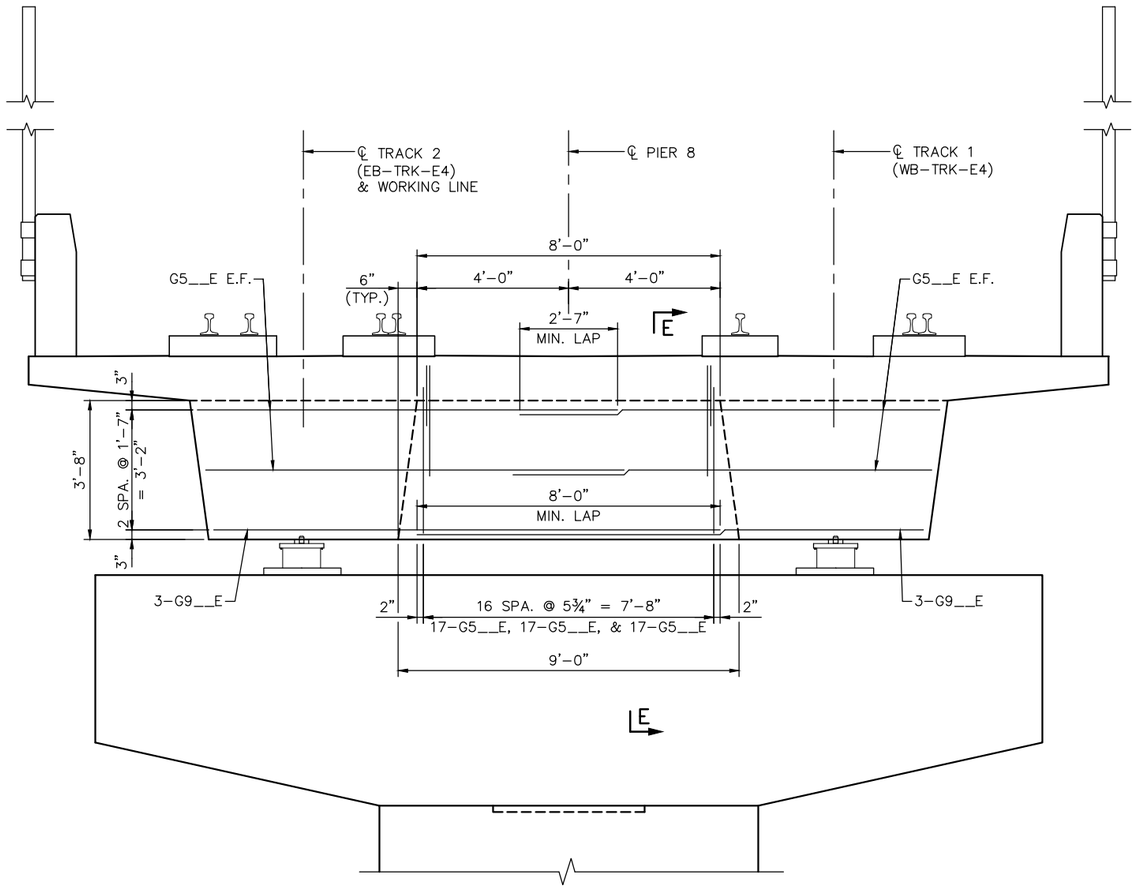

PIER 8 ELEVATION
(LOOKING DOWNSTATION)

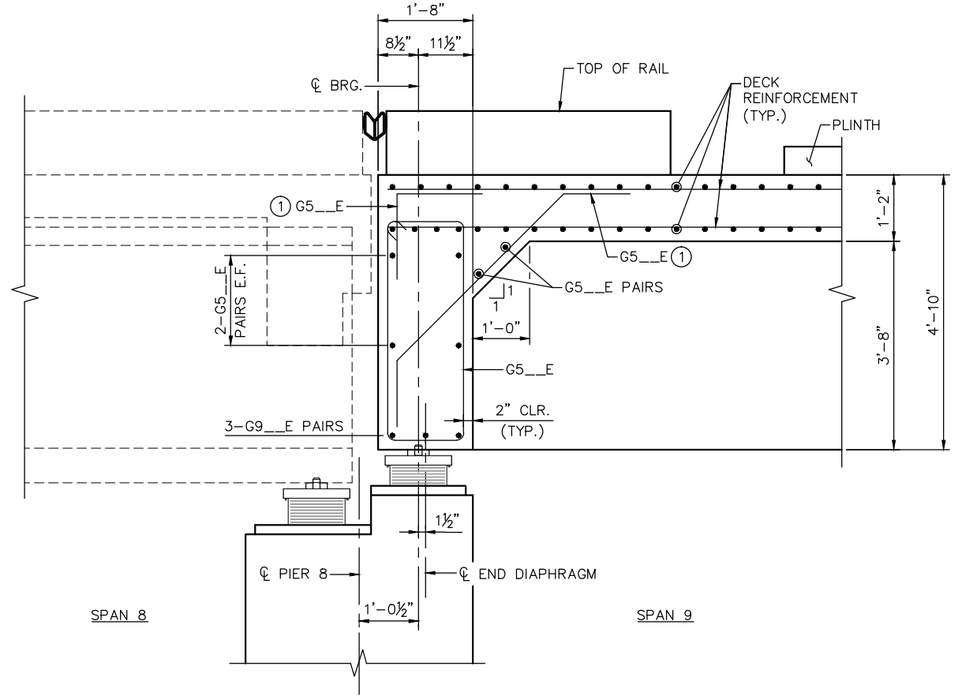

SECTION E–E

NOTES:

SEE SHEETS 57–58 FOR LOCATION OF SECTION E–E.

(1) TIE BAR TO TOP MAT.

NO.	DATE	BY	CHECK	DESIGN	REVISION / SUBMITTAL

DESIGNED BY: TDR | CHECKED BY: EJT
DRAWN BY: LMT | CHECKED BY: EJT

AECOM Kimley»Horn

90% SUBMISSION - 01/22/16

METROPOLITAN COUNCIL

SOUTHWEST Green Line LRT Extension

CIVIL - VOLUME 4G
LRT OVER BNSF
BRIDGE R0697
CONCRETE GIRDER DETAILS 6

DISCIPLINE: STRUCTURES
SHEET NAME: CBRR0697-BRG-GIR-001-6

SHEET 62 OF 118

Jan. 18 2016 01:43 pm v:\3400_ADC\CAD\SEGMENT E4\PLAN SHEETS\STRUCTURES\R0697\CBRR0697-BRG-GIR-001.dwg By: lisa.thompson

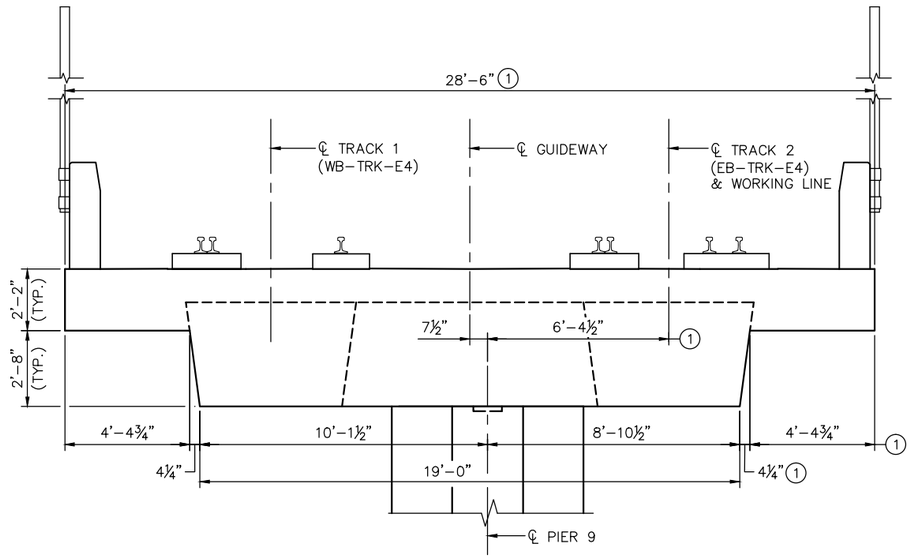

INTEGRAL CAP ELEVATION
(LOOKING UPSTATION)

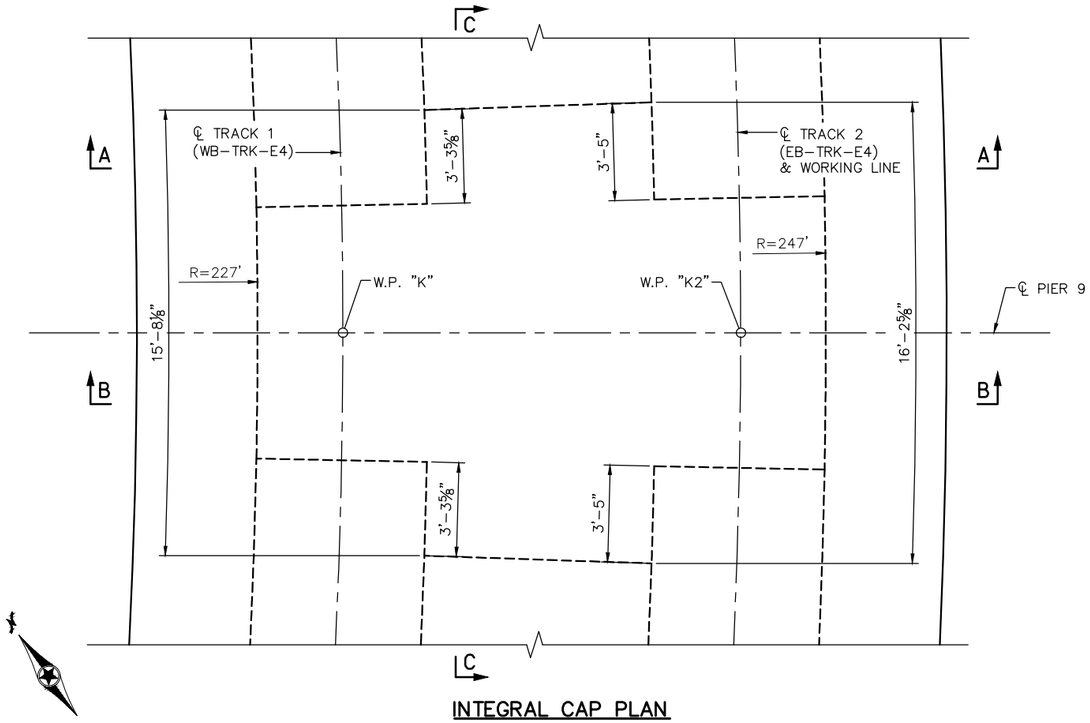

INTEGRAL CAP PLAN

NOTES:

SEE SHEETS 67-69 FOR SECTION A-A, B-B, & C-C.

(1) MEASURED ALONG CENTERLINE OF PIER 9.

NO.	DATE	BY	CHECK	DESIGN	REVISION / SUBMITTAL

DESIGNED BY: TDR | CHECKED BY: EJT
DRAWN BY: LMT | CHECKED BY: EJT

AECOM Kimley»Horn

90% SUBMISSION - 01/22/16

METROPOLITAN COUNCIL

SOUTHWEST Green Line LRT Extension

CIVIL - VOLUME 4G
LRT OVER BNSF
BRIDGE R0697
CONCRETE GIRDER DETAILS 7

DISCIPLINE: STRUCTURES
SHEET NAME: CBRR0697-BRG-GIR-001-7

SHEET 63 OF 118

Jan, 18 2016 01:43 pm V:\3400_ADC\CAD\SEGMENT E4\PLAN SHEETS\STRUCTURES\R0697\CBRR0697-BRG-GIR-001.dwg By: lisa.thompson

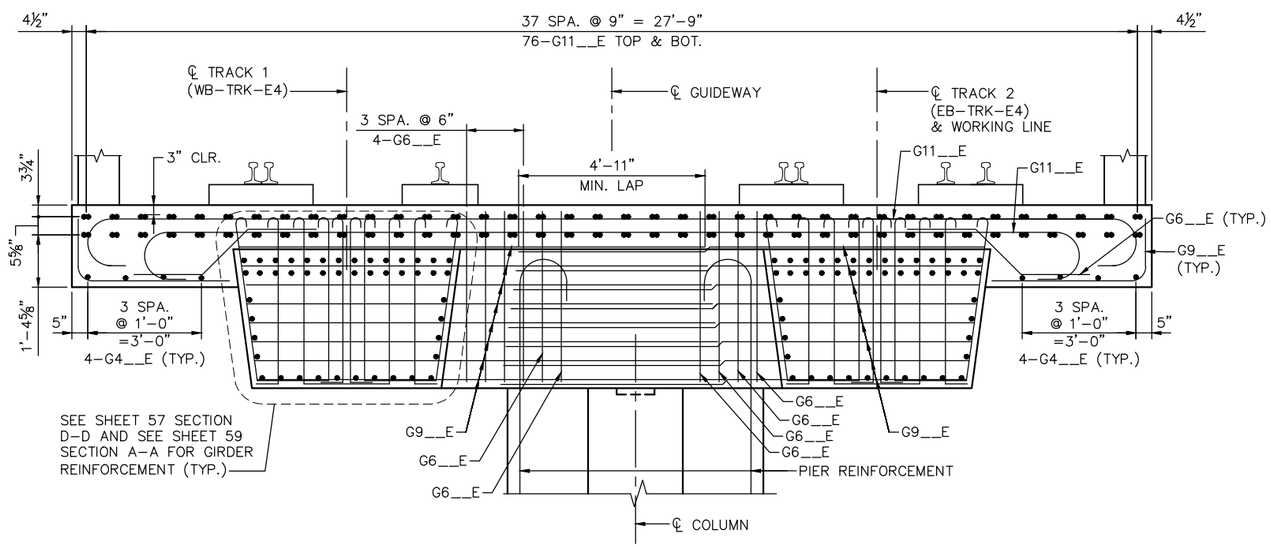

SECTION A-A

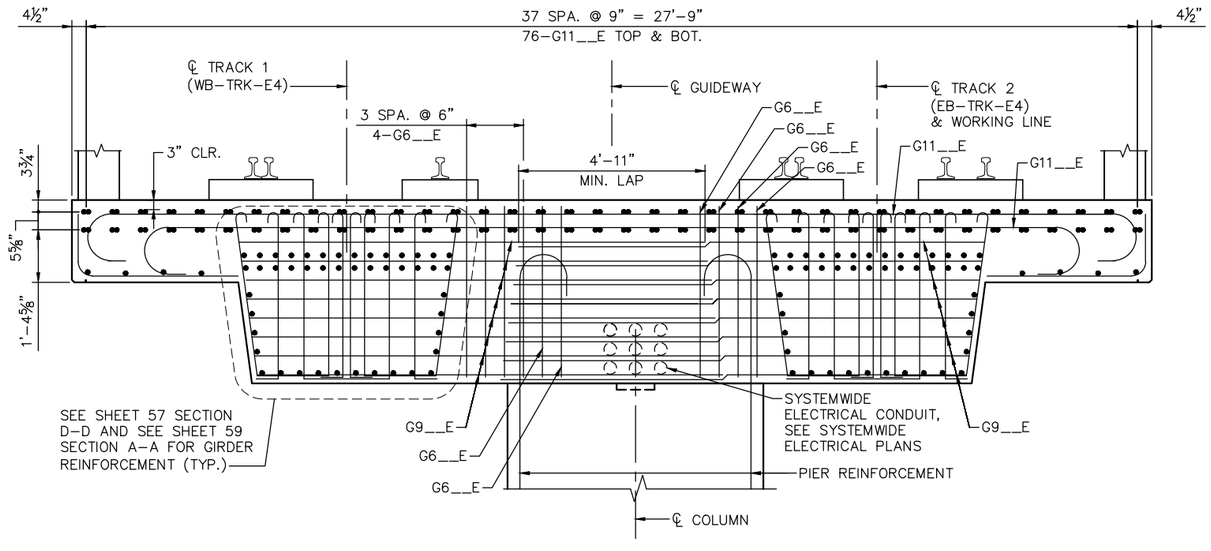

SECTION B-B

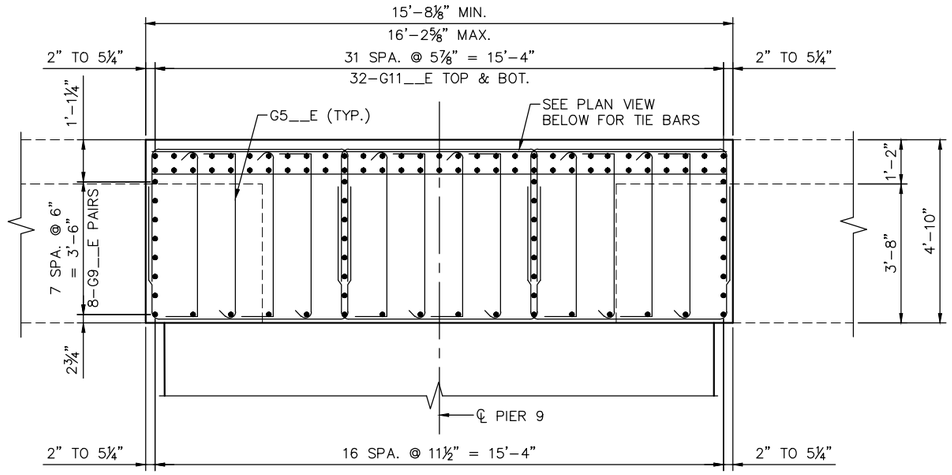

SECTION C-C

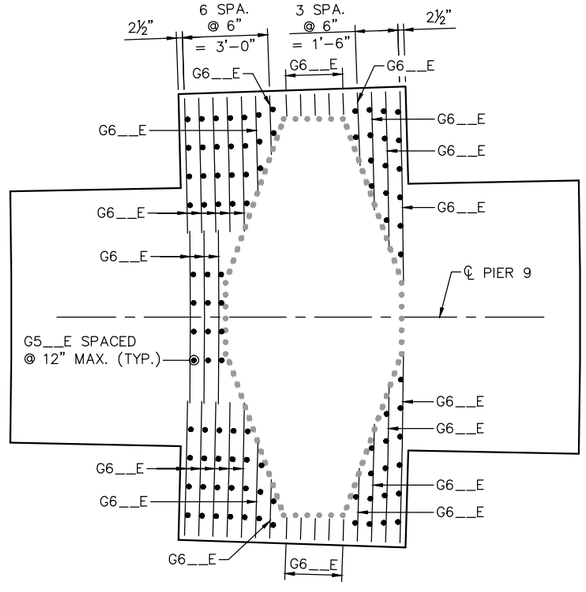

PLAN

NOTES:

SEE SHEETS 67-69 FOR LOCATION OF SECTION A-A, B-B, & C-C.

NO.	DATE	BY	CHECK	DESIGN	REVISION / SUBMITTAL

DESIGNED BY: TDR | CHECKED BY: EJT
DRAWN BY: LMT | CHECKED BY: EJT

AECOM Kimley»Horn

90% SUBMISSION - 01/22/16

METROPOLITAN COUNCIL

SOUTHWEST Green Line LRT Extension

CIVIL - VOLUME 4G
LRT OVER BNSF
BRIDGE R0697
CONCRETE GIRDER DETAILS 8

DISCIPLINE: STRUCTURES
SHEET NAME: CBRR0697-BRG-GIR-001-8

SHEET 64 OF 118

Jan, 18 2016 01:43 pm V:\3400_ADC\CAD\SEGMENT E4\PLAN SHEETS\STRUCTURES\R0697\CBRR0697-BRG-GIR-001.dwg By: lisa.thompson

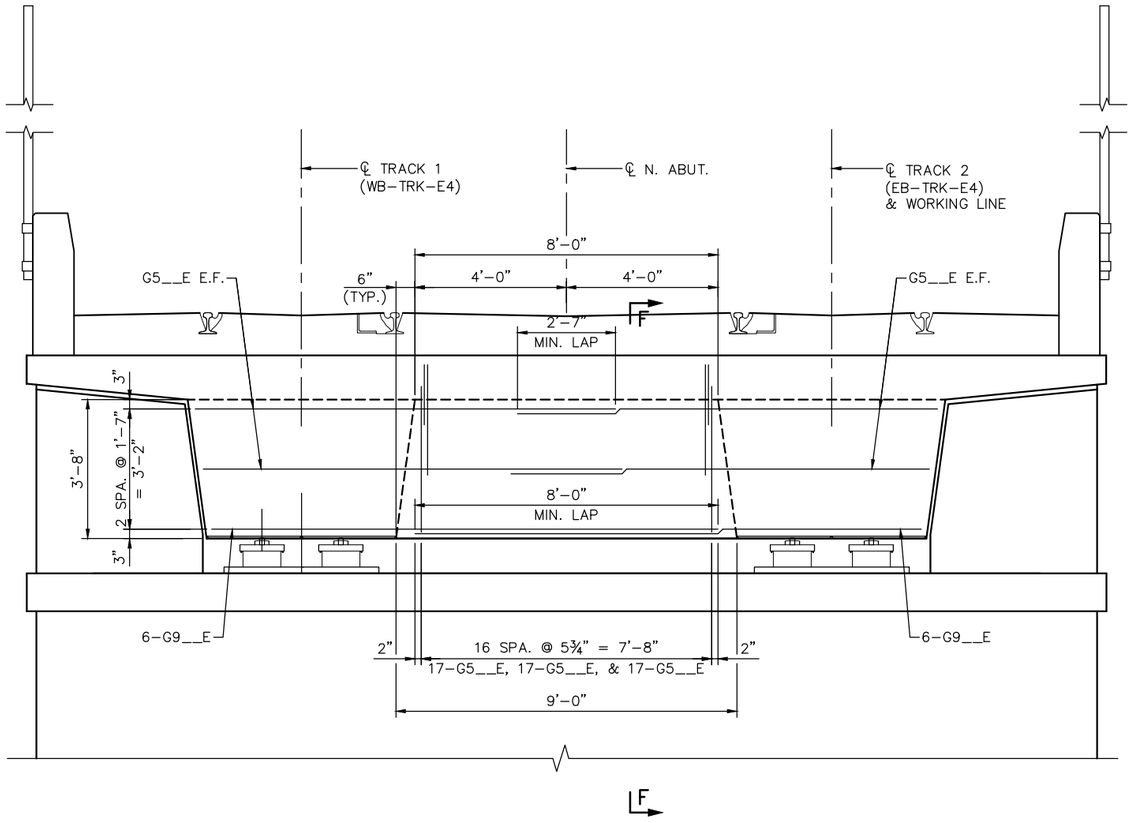

NORTH ABUTMENT ELEVATION
(LOOKING UPSTATION)

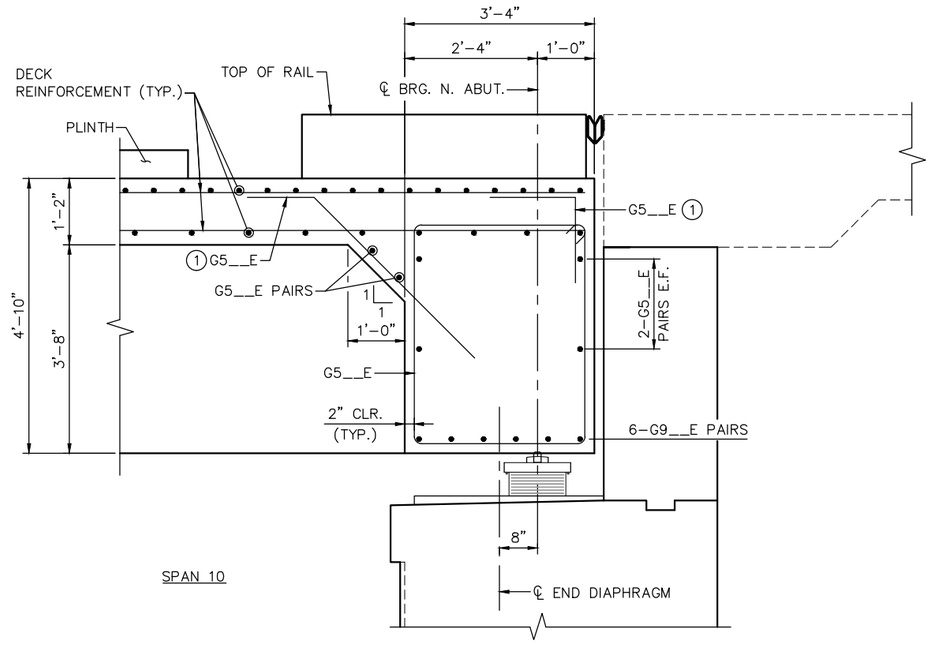

SPAN 10

SECTION F–F

NOTES:

SEE SHEETS 59–60 FOR LOCATION OF SECTION F–F.

① TIE BAR TO TOP MAT.

NO.	DATE	BY	CHECK	DESIGN	REVISION / SUBMITTAL

DESIGNED BY: TDR | CHECKED BY: EJT
DRAWN BY: LMT | CHECKED BY: EJT

AECOM Kimley»Horn

90% SUBMISSION - 01/22/16

METROPOLITAN COUNCIL

SOUTHWEST Green Line LRT Extension

CIVIL - VOLUME 4G
LRT OVER BNSF
BRIDGE R0697
CONCRETE GIRDER DETAILS 9

DISCIPLINE: STRUCTURES
SHEET NAME: CBRR0697-BRG-GIR-001-9

SHEET 65 OF 118

Jan, 18 2016 01:43 pm V:\3400_ADC\CAD\SEGMENT E4\PLAN SHEETS\STRUCTURES\R0697\CBRR0697-BRG-GIR-001.dwg By: lisa.thompson

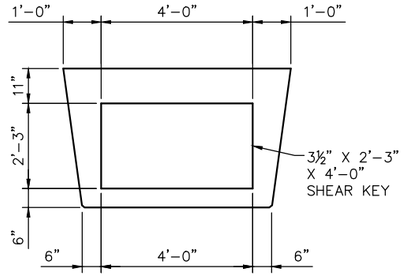

END VIEW

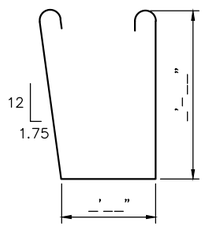

G601E

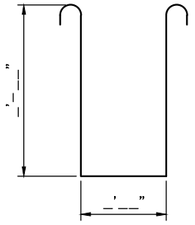

G602E

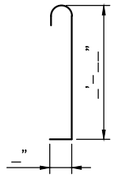

G603E

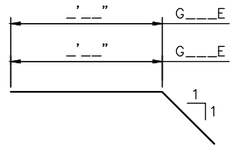

G__E & G__E

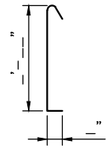

G5__E

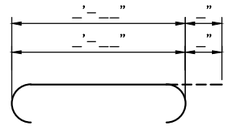

G__E & G__E

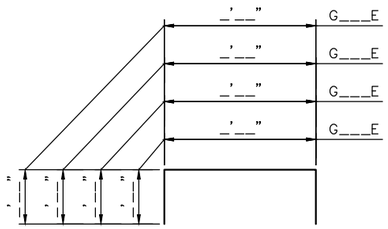

G6__E, G6__E
G6__E & G6__E

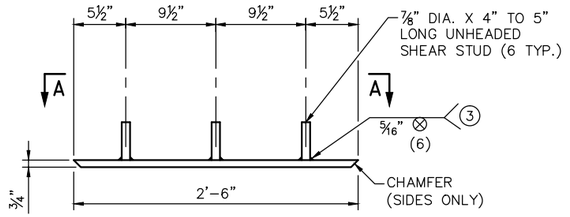

DECK GIRDER SOLE PLATE

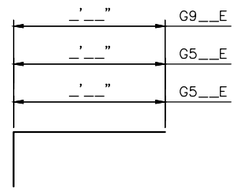

G5__E, G5__E
& G9__E



G11__E

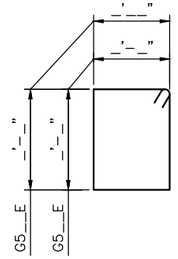

G5__E & G5__E

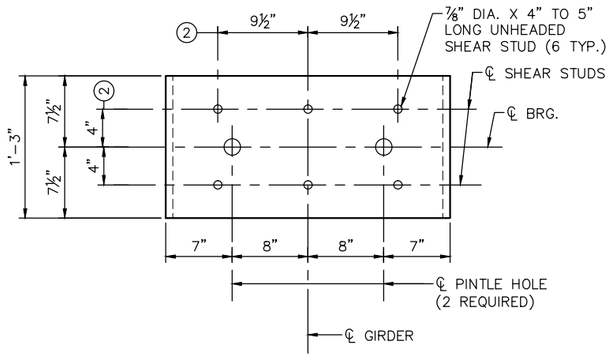

SECTION A–A

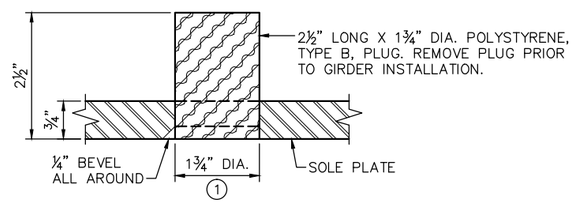

PINTLE HOLE DETAIL

BILL OF REINFORCEMENT FOR GIRDERS

BAR	NO.	LENGTH	SHAPE	LOCATION
G01E	0	'-"	BENT	0
G02E	0	'-"	0	0
G03E	0	'-"	0	0
G04E	0	'-"	0	0
G05E	0	'-"	0	0
G06E	0	'-"	0	0
G07E	0	'-"	0	0
G08E	0	'-"	0	0
G09E	0	'-"	0	0
G10E	0	'-"	0	0
G11E	0	'-"	0	0
G12E	0	'-"	0	0
G13E	0	'-"	0	0
G14E	0	'-"	0	0
G15E	0	'-"	0	0
G16E	0	'-"	0	0
G17E	0	'-"	0	0
G18E	0	'-"	0	0
G19E	0	'-"	0	0
G20E	0	'-"	0	0
G21E	0	'-"	0	0
G22E	0	'-"	0	0
G23E	0	'-"	0	0
G24E	0	'-"	0	0
G25E	0	'-"	0	0
G26E	0	'-"	0	0
G27E	0	'-"	0	0
G28E	0	'-"	0	0
G29E	0	'-"	0	0
G30E	0	'-"	0	0

SOLE PLATE NOTES:

MATERIAL TO BE STRUCTURAL STEEL PER MnDOT SPEC. 3306.

WELDED STUDS TO BE WELDABLE CARBON STEEL PER MnDOT SPEC. 3391.2.D.

SOLE PLATE FOR BEARING ASSEMBLY TO BE GALVANIZED PER MnDOT SPEC. 3394 AFTER FABRICATION.

PINTLE HOLES SHALL BE FREE OF ZINC BUILD UP FROM GALVANIZING.

(1) FOR 1½" DIA. PINTLES.

(2) THESE DIMENSIONS MAY BE MODIFIED TO CLEAR REINFORCING BARS. HOWEVER, CHANGES MUST BE APPROVED BY THE ENGINEER.

(3) THE REQUIREMENTS FOR WELDING STUDS SHALL COMPLY WITH AASHTO/AWS D1.1.

NO.	DATE	BY	CHECK	DESIGN	REVISION / SUBMITTAL

DESIGNED BY: TDR | CHECKED BY: EJT
DRAWN BY: LMT | CHECKED BY: EJT

AECOM Kimley»Horn

90% SUBMISSION - 01/22/16

METROPOLITAN COUNCIL

SOUTHWEST Green Line LRT Extension

CIVIL - VOLUME 4G
LRT OVER BNSF
BRIDGE R0697
CONCRETE GIRDER DETAILS 10

DISCIPLINE: STRUCTURES
SHEET NAME: CBRR0697-BRG-GIR-001-10

SHEET 66 OF 118

Jan, 18 2016 01:43 pm V:\3400_ADC\CAD\SEGMENT E4\PLAN SHEETS\STRUCTURES\R0697\CBRR0697-BRG-GIR-001.dwg By: lisa.thompson

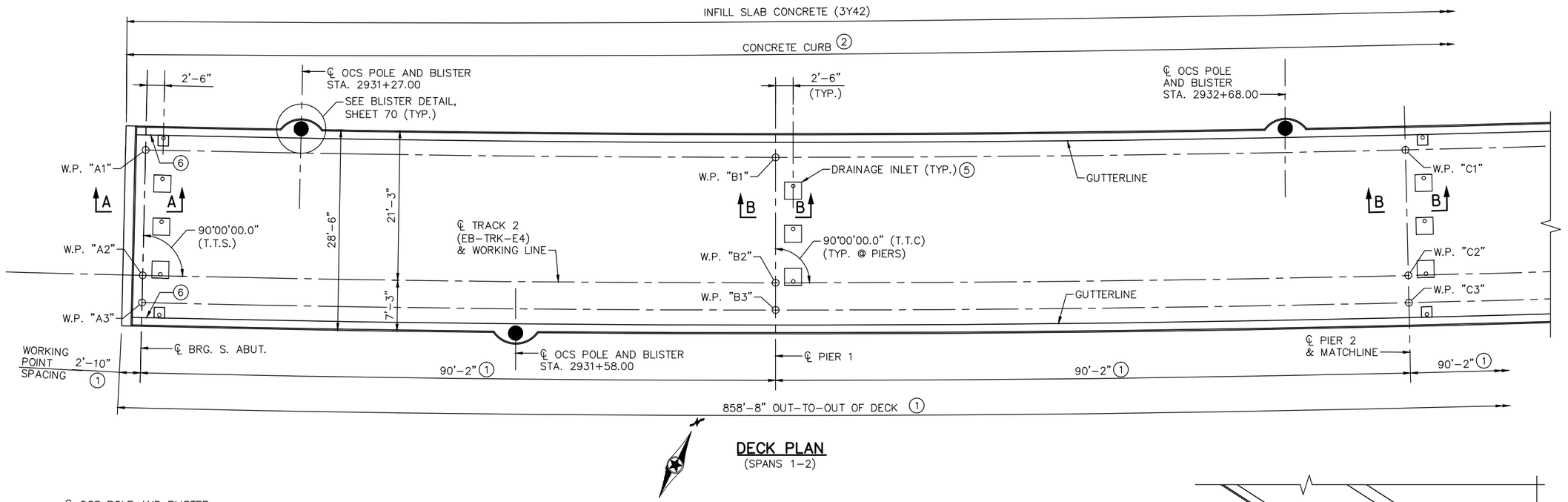

DECK PLAN
(SPANS 1-2)

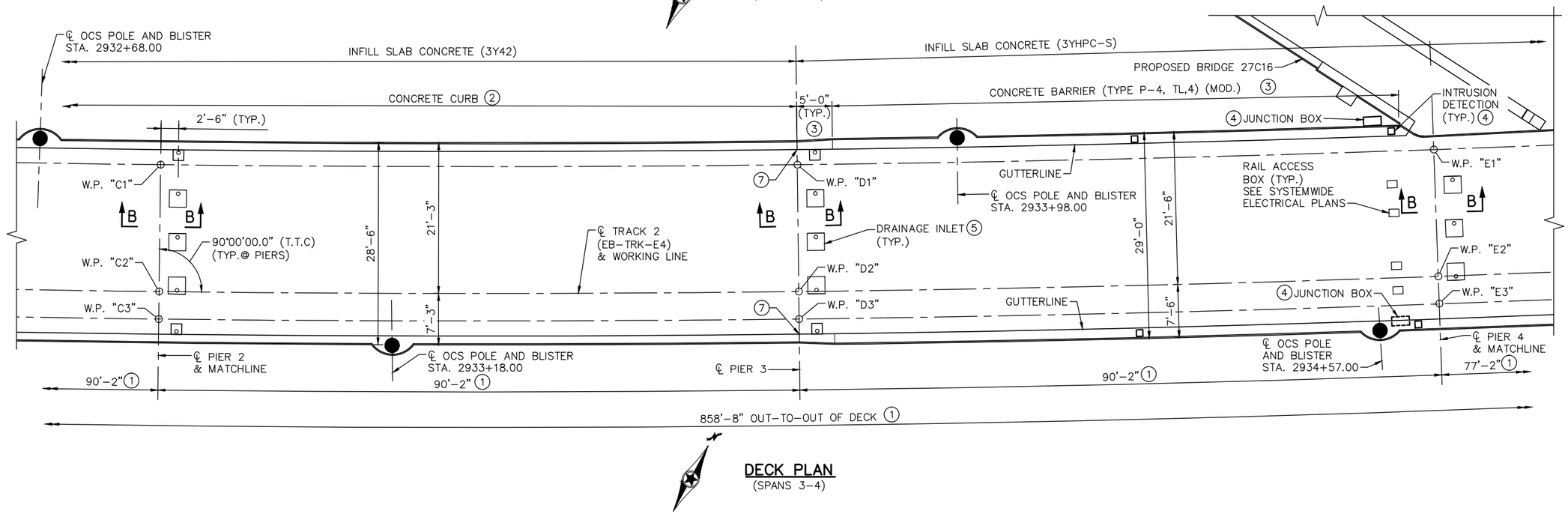

DECK PLAN
(SPANS 3-4)

NOTES:

SEE SHEET 72 FOR SECTION A-A & B-B.

SEE SHEET 72 FOR TRANSVERSE SECTION THRU DECK.

(1) DIMENSIONS MEASURED ALONG CENTERLINE TRACK 2.

(2) SEE SHEET 86 FOR CONCRETE CURB DETAILS.

(3) SEE SHEET 87 FOR CONCRETE BARRIER (TYPE P-4,TL-4) (MOD.) DETAILS.

(4) SEE SHEETS 90-93 FOR CONDUIT SYSTEM DETAILS.

(5) SEE SHEETS 94-96 FOR DECK DRAIN DETAILS.

(6) STRAY CURRENT TEST STATION. SEE STRAY CURRENT NOTE 6 ON SHEET 5.

(7) STRAY CURRENT TEST STATION. SEE STRAY CURRENT NOTE 7 ON SHEET 5.

NO.	DATE	BY	CHECK	DESIGN	REVISION / SUBMITTAL

DESIGNED BY: BAW | CHECKED BY: EJT
DRAWN BY: LMT | CHECKED BY: EJT

AECOM Kimley»Horn

90% SUBMISSION - 01/22/16

METROPOLITAN COUNCIL

SOUTHWEST Green Line LRT Extension

CIVIL - VOLUME 4G
LRT OVER BNSF
BRIDGE R0697
SUPERSTRUCTURE DETAILS 1

DISCIPLINE: STRUCTURES

SHEET NAME: CBRR0697-BRG-SUP-003-1

SHEET 67 OF 118

Jan. 18 2016 01:44 pm v:\3400_ADC\CAD\SEGMENT E4\PLAN SHEETS\STRUCTURES\R0697\CBRR0697-BRG-SUP-003.dwg By: lisa.thompson

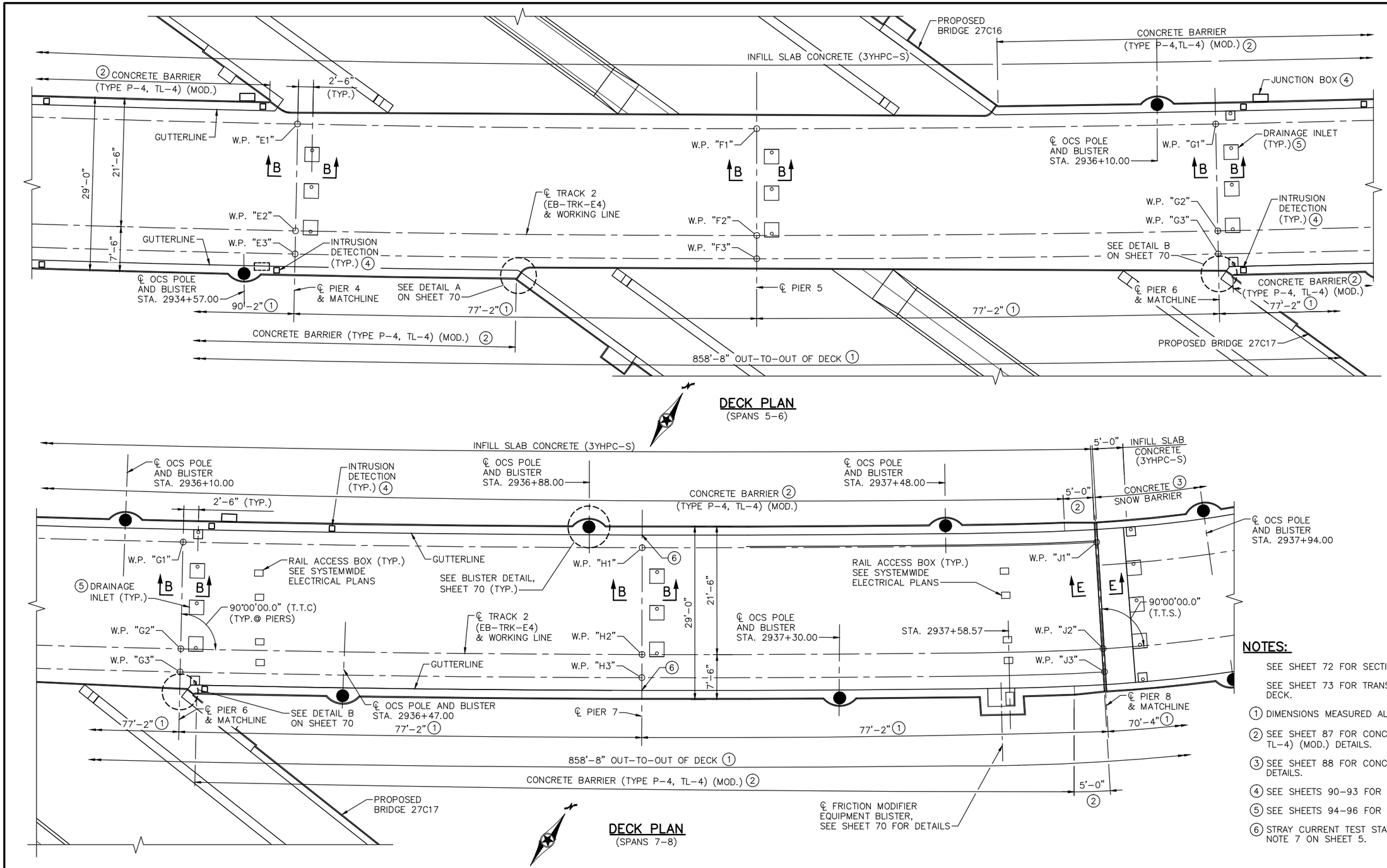

NOTES:

SEE SHEET 72 FOR SECTIONS B-B & C-C.

SEE SHEET 73 FOR TRANSVERSE SECTION THRU DECK.

(1) DIMENSIONS MEASURED ALONG CENTERLINE TRACK 2.

(2) SEE SHEET 87 FOR CONCRETE BARRIER (TYPE P-4, TL-4) (MOD.) DETAILS.

(3) SEE SHEET 88 FOR CONCRETE SNOW BARRIER DETAILS.

(4) SEE SHEETS 90-93 FOR CONDUIT SYSTEM DETAILS.

(5) SEE SHEETS 94-96 FOR DECK DRAIN DETAILS.

(6) STRAY CURRENT TEST STATION. SEE STRAY CURRENT NOTE 7 ON SHEET 5.

NO.	DATE	BY	CHECK	DESIGN	REVISION / SUBMITTAL

DESIGNED BY: BAW | CHECKED BY: EJT
DRAWN BY: LMT | CHECKED BY: EJT

AECOM Kimley»Horn

90% SUBMISSION - 01/22/16

METROPOLITAN COUNCIL

SOUTHWEST Green Line LRT Extension

CIVIL - VOLUME 4G
LRT OVER BNSF
BRIDGE R0697
SUPERSTRUCTURE DETAILS 2

DISCIPLINE: STRUCTURES

SHEET NAME: CBRR0697-BRG-SUP-003-2

SHEET 68 OF 118

Jan, 18 2016 01:44 pm V:\3400_ADC\CAD\SEGMENT E4\PLAN SHEETS\STRUCTURES\R0697\CBRR0697-BRG-SUP-003.dwg By: lisa.thompson

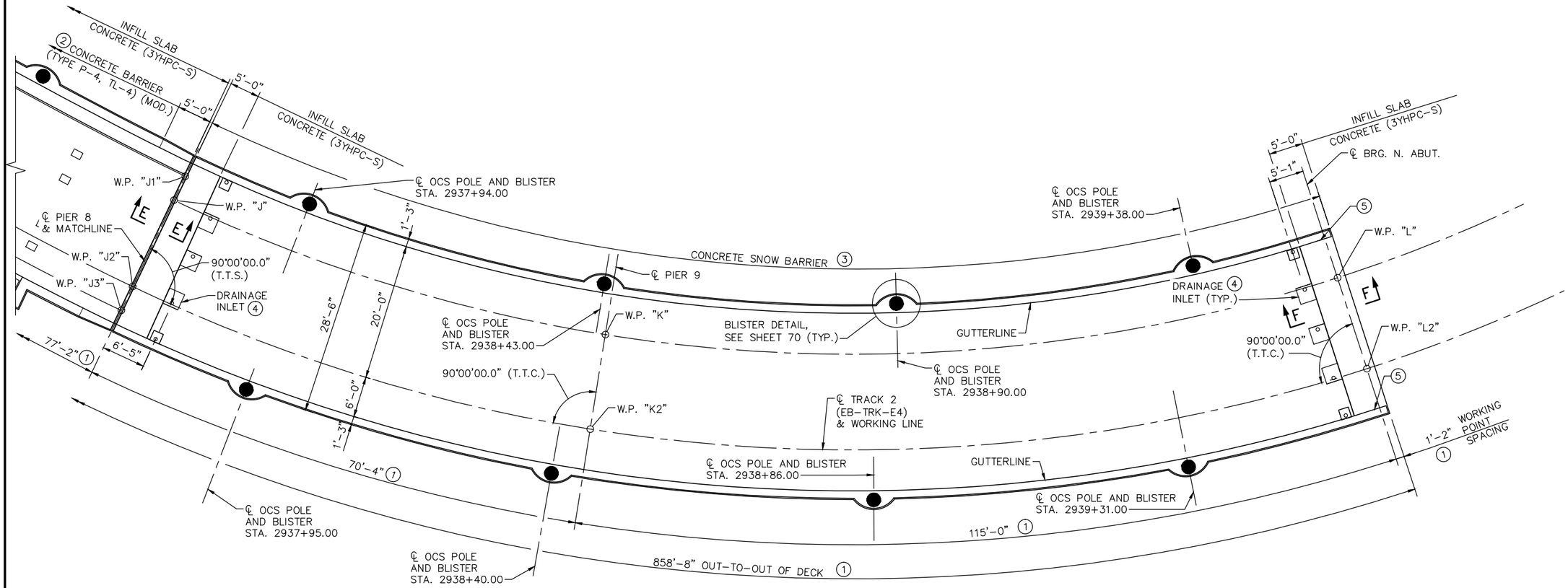

DECK PLAN
(SPANS 9-10)

NOTES:

SEE SHEET 62 FOR SECTION E-E.

SEE SHEET 65 FOR SECTION F-F.

SEE SHEET 74 FOR TRANSVERSE SECTION THRU DECK.

(1) DIMENSIONS MEASURED ALONG CENTERLINE TRACK 2.

(2) SEE SHEET 87 FOR CONCRETE BARRIER (TYPE P-4, TL-4) (MOD.) DETAILS.

(3) SEE SHEET 88 FOR CONCRETE SNOW BARRIER DETAILS.

(4) SEE SHEETS 94-96 FOR DECK DRAIN DETAILS.

(5) STRAY CURRENT TEST STATION. SEE STRAY CURRENT NOTE 6 ON SHEET 5.

NO.	DATE	BY	CHECK	DESIGN	REVISION / SUBMITTAL

DESIGNED BY: BAW | CHECKED BY: EJT
DRAWN BY: LMT | CHECKED BY: EJT

AECOM Kimley»Horn

90% SUBMISSION - 01/22/16

METROPOLITAN COUNCIL

SOUTHWEST Green Line LRT Extension

CIVIL - VOLUME 4G
LRT OVER BNSF
BRIDGE R0697
SUPERSTRUCTURE DETAILS 3

DISCIPLINE: STRUCTURES

SHEET NAME: CBRR0697-BRG-SUP-003-3

SHEET 69 OF 118

Jan. 18 2016 01:44 pm v:\3400_ADC\CAD\SEGMENT E4\PLAN SHEETS\STRUCTURES\R0697\CBRR0697-BRG-SUP-003.dwg By: lisa.thompson

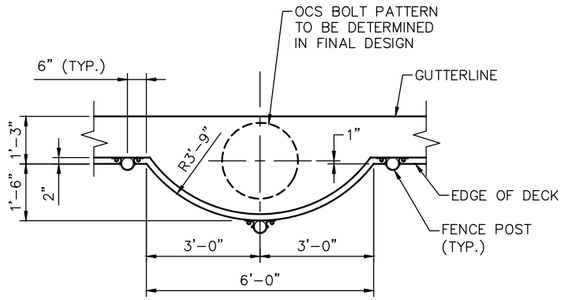

OCS BLISTER AT CURB & SNOW BARRIER

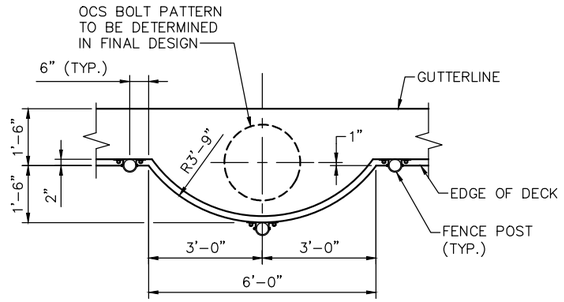

OCS BLISTER AT CONCRETE BARRIER
(TYPE P-4, TL-4) (MOD.) BLISTER

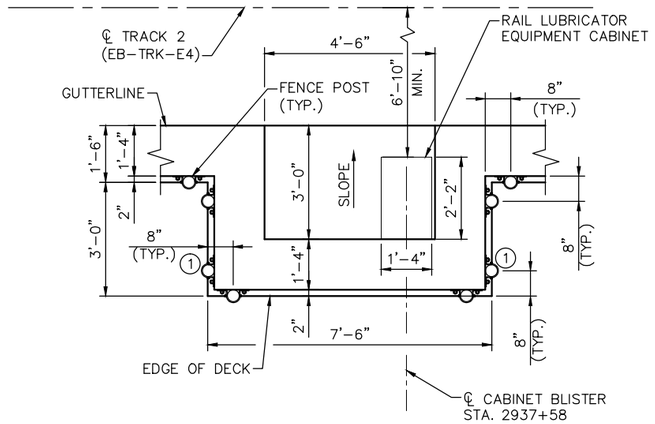

FRICTION MODIFIER BLISTER

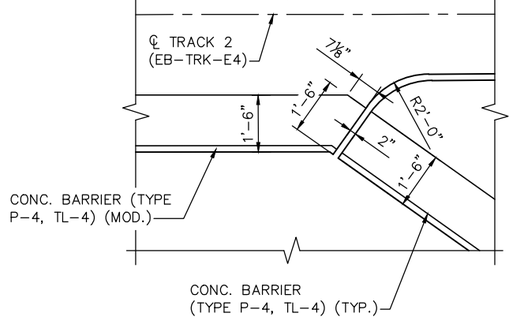

DETAIL A

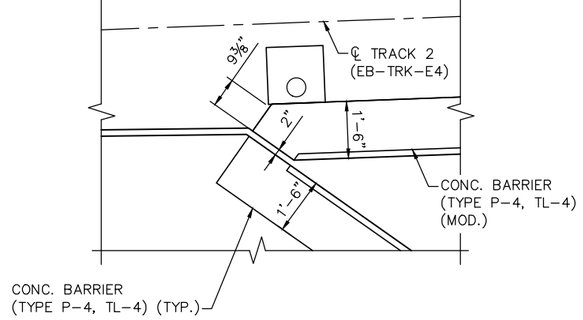

DETAIL B

NOTES:

A MINIMUM OF 72 HOURS MUST BE PROVIDED BETWEEN ADJACENT DECK POURS.

(1) CONTRACTOR SHALL VERTICALLY OFFSET ANCHOR BOLTS BY 1" TO AVOID ANCHOR BOLT CONFLICT

NO.	DATE	BY	CHECK	DESIGN	REVISION / SUBMITTAL

DESIGNED BY: BAW | CHECKED BY: EJT
DRAWN BY: LMT | CHECKED BY: EJT

AECOM Kimley»Horn

90% SUBMISSION - 01/22/16

METROPOLITAN COUNCIL

SOUTHWEST Green Line LRT Extension

CIVIL - VOLUME 4G
LRT OVER BNSF
BRIDGE R0697
SUPERSTRUCTURE DETAILS 4

DISCIPLINE: STRUCTURES

SHEET NAME: CBRR0697-BRG-SUP-003-4

SHEET 70 OF 118

Jan, 18 2016 01:44 pm V:\3400_ADC\CAD\SEGMENT E4\PLAN SHEETS\STRUCTURES\R0697\CBRR0697-BRG-SUP-003.dwg By: lisa.thompson

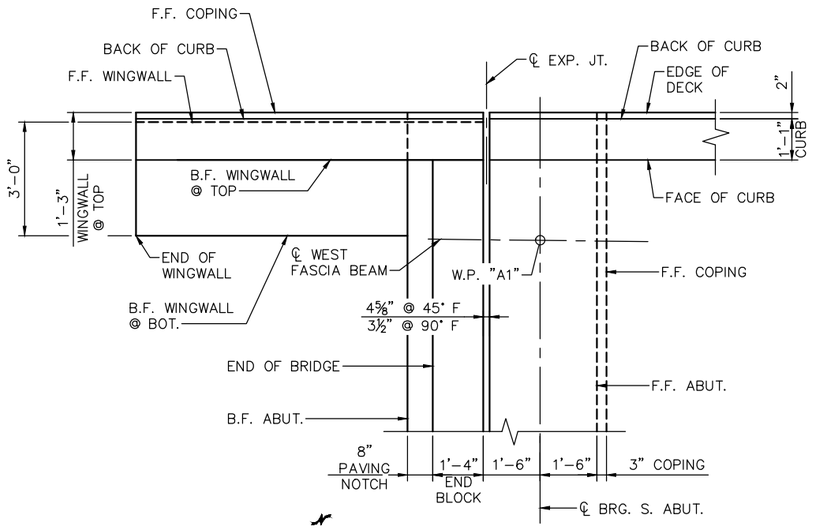

S.W. CORNER DETAIL

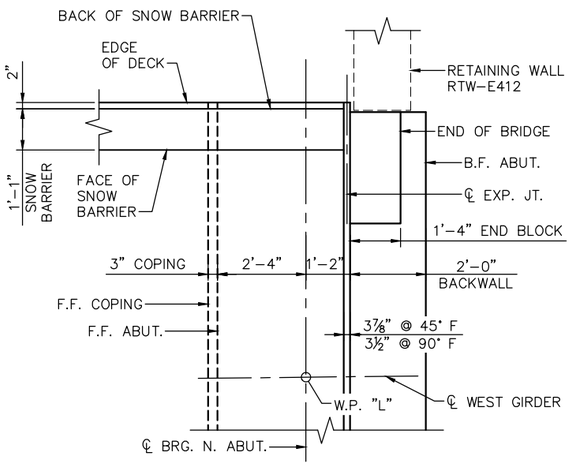

N.W. CORNER DETAIL

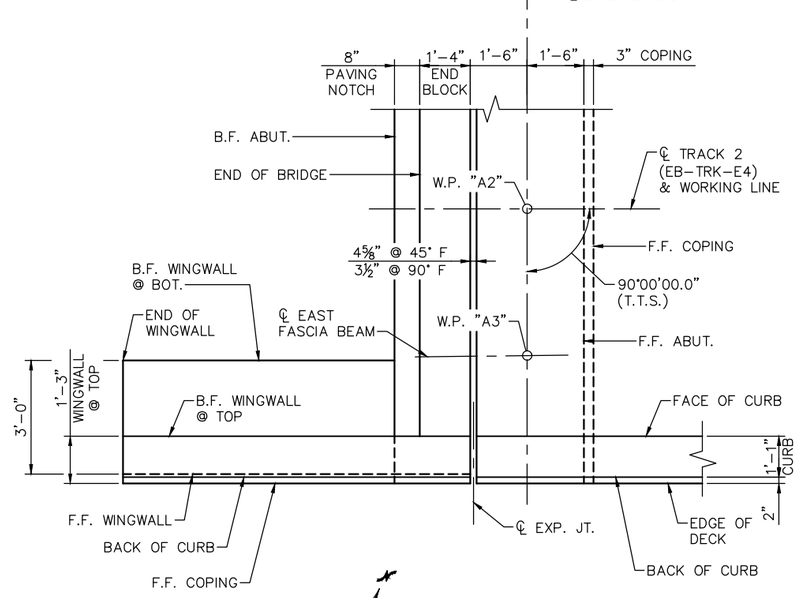

S.E. CORNER DETAIL

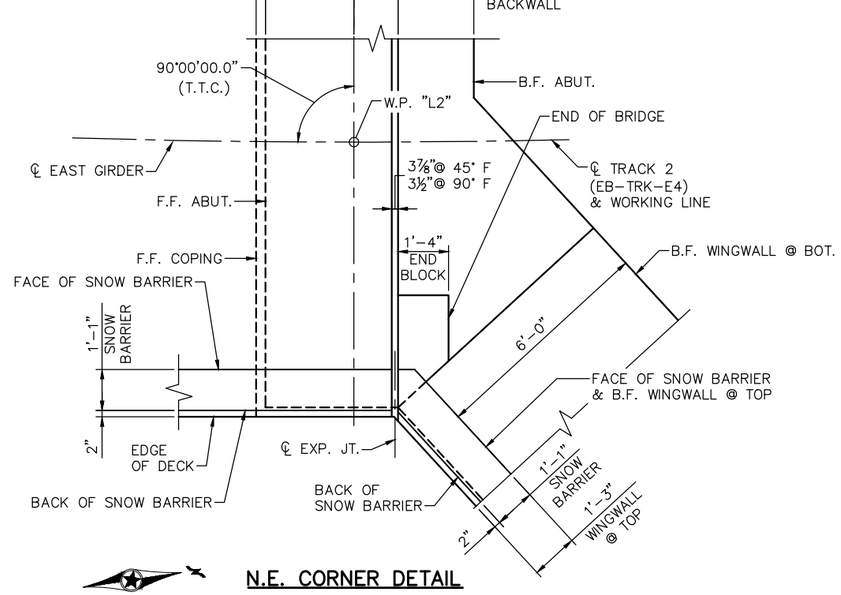

N.E. CORNER DETAIL

NO.	DATE	BY	CHECK	DESIGN	REVISION / SUBMITTAL

DESIGNED BY: BAW | CHECKED BY: EJT
DRAWN BY: LMT | CHECKED BY: EJT

AECOM Kimley»Horn

90% SUBMISSION - 01/22/16

METROPOLITAN COUNCIL

SOUTHWEST Green Line LRT Extension

CIVIL - VOLUME 4G
LRT OVER BNSF
BRIDGE R0697
SUPERSTRUCTURE DETAILS 5

DISCIPLINE: STRUCTURES

SHEET NAME: CBRR0697-BRG-SUP-003-5

SHEET 71 OF 118

Jan. 18 2016 01:44 pm V:\3400_ADC\CAD\SEGMENT E4\PLAN SHEETS\STRUCTURES\R0697\CBRR0697-BRG-SUP-003.dwg By: lisa.thompson

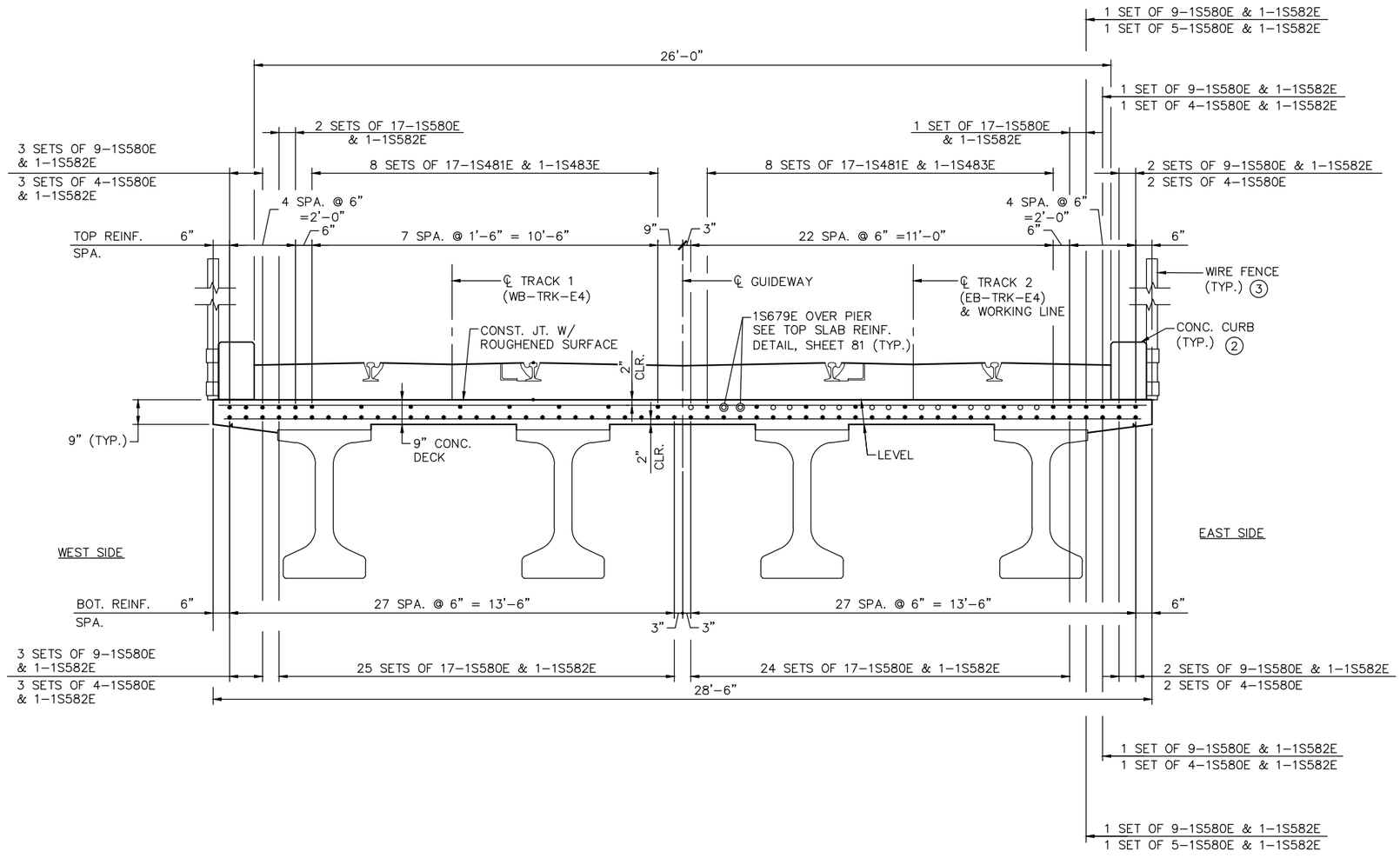

HALF SECTION AT MID–SPAN

HALF SECTION AT PIERS

TRANSVERSE SECTION THRU DECK
(UNIT 1, SPANS 1–3)

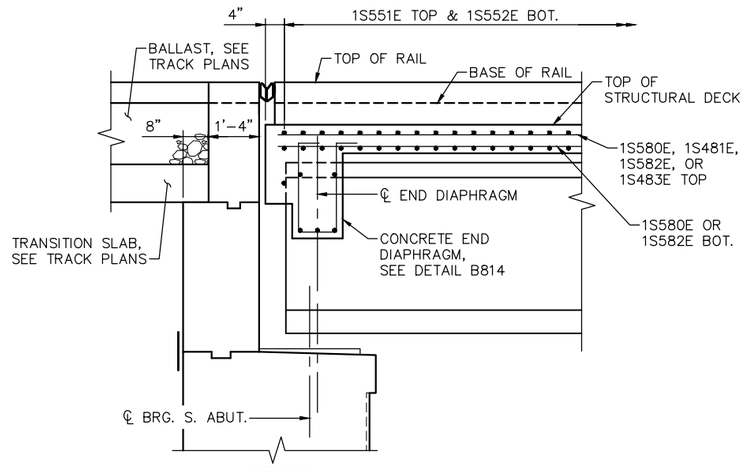

SECTION A–A

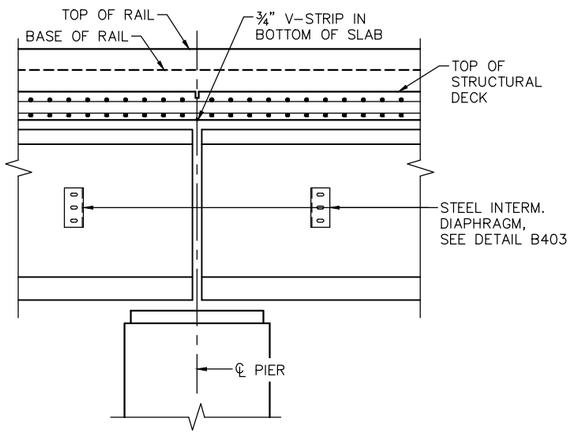

SECTION B–B

NOTES:

SEE SHEETS 75 & 76 FOR LOCATIONS OF SECTIONS A–A AND B–B.

(1) SEE SHEET 67–69 FOR INFILL SLAB CONCRETE.

(2) SEE SHEET 86 FOR CONCRETE CURB DETAILS.

(3) SEE SHEET 89 FOR WIRE FENCE DETAILS.

NO.	DATE	BY	CHECK	DESIGN	REVISION / SUBMITTAL

DESIGNED BY: BAW | CHECKED BY: EJT
DRAWN BY: LMT | CHECKED BY: EJT

AECOM Kimley»Horn

90% SUBMISSION - 01/22/16

METROPOLITAN COUNCIL

SOUTHWEST Green Line LRT Extension

CIVIL - VOLUME 4G
LRT OVER BNSF
BRIDGE R0697
SUPERSTRUCTURE DETAILS 6

DISCIPLINE: STRUCTURES
SHEET NAME: CBRR0697-BRG-SUP-004-1

SHEET 72 OF 118

Jan. 18 2016 01:44 pm V:\3400_ADC\CAD\SEGMENT E4\PLAN SHEETS\STRUCTURES\R0697\CBRR0697-BRG-SUP-004.dwg By: lisa.thompson

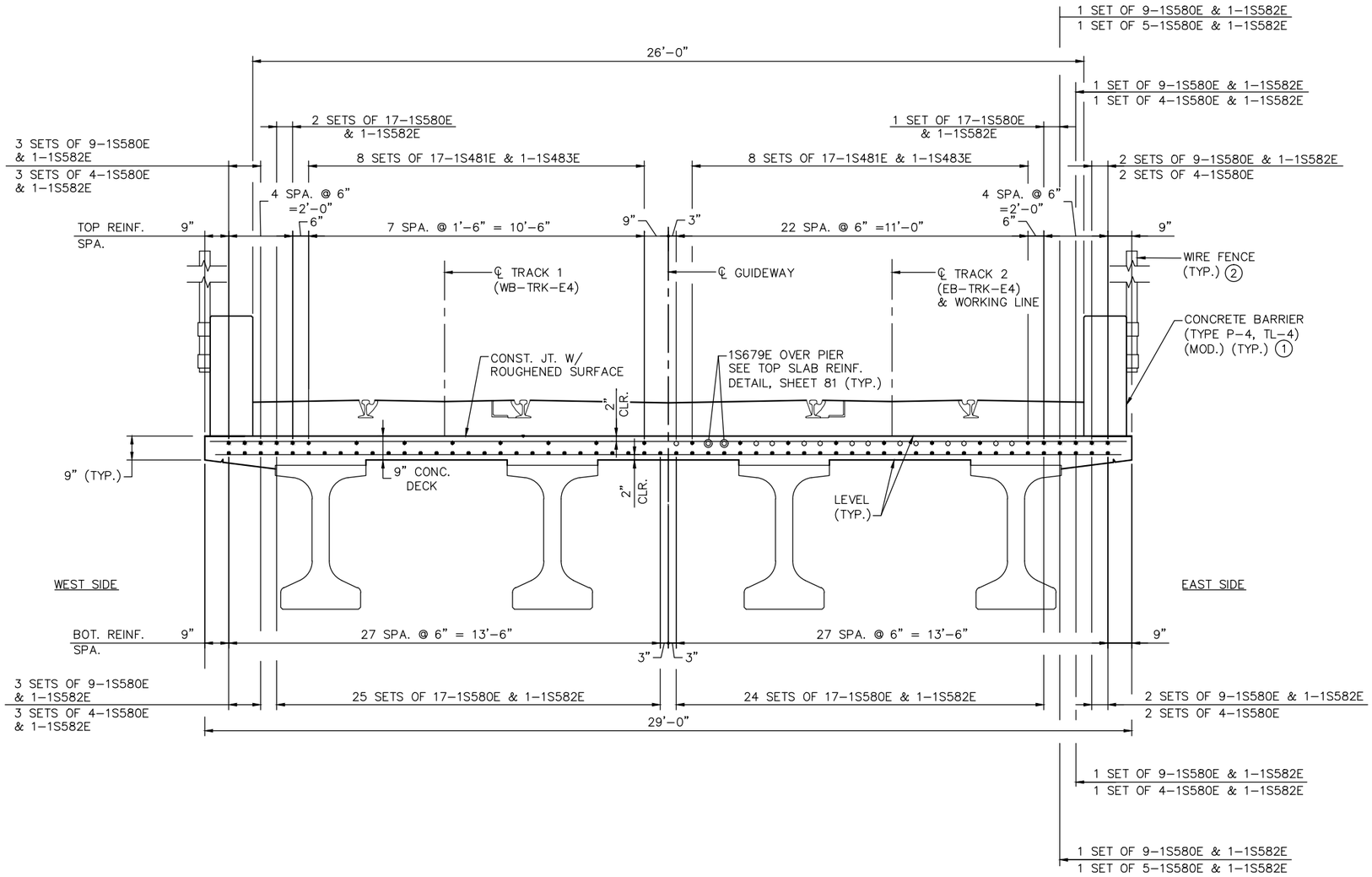

HALF SECTION AT MID–SPAN

HALF SECTION AT PIERS

TRANSVERSE SECTION THRU DECK
(UNIT 1, SPANS 4–8)

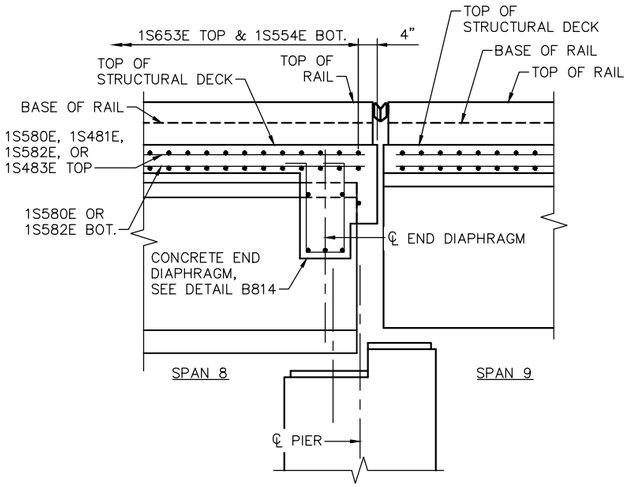

SECTION C–C

NOTES:

SEE SHEETS 76 & 77 FOR LOCATION OF SECTION C–C.

(1) SEE SHEET 87 FOR CONCRETE BARRIER (TYPE P–4, TL–4) (MOD.) DETAILS.

(2) SEE SHEET 89 FOR WIRE FENCE DETAILS.

NO.	DATE	BY	CHECK	DESIGN	REVISION / SUBMITTAL

DESIGNED BY: BAW | CHECKED BY: EJT
DRAWN BY: LMT | CHECKED BY: EJT

AECOM Kimley»Horn

90% SUBMISSION - 01/22/16

METROPOLITAN COUNCIL

SOUTHWEST Green Line LRT Extension

CIVIL - VOLUME 4G
LRT OVER BNSF
BRIDGE R0697
SUPERSTRUCTURE DETAILS 7

DISCIPLINE: STRUCTURES

SHEET NAME: CBRR0697-BRG-SUP-004-2

SHEET 73 OF 118

Jan, 18 2016 01:45 pm V:\3400_ADC\CAD\SEGMENT E4\PLAN SHEETS\STRUCTURES\R0697\CBRR0697-BRG-SUP-004.dwg By: lisa.thompson

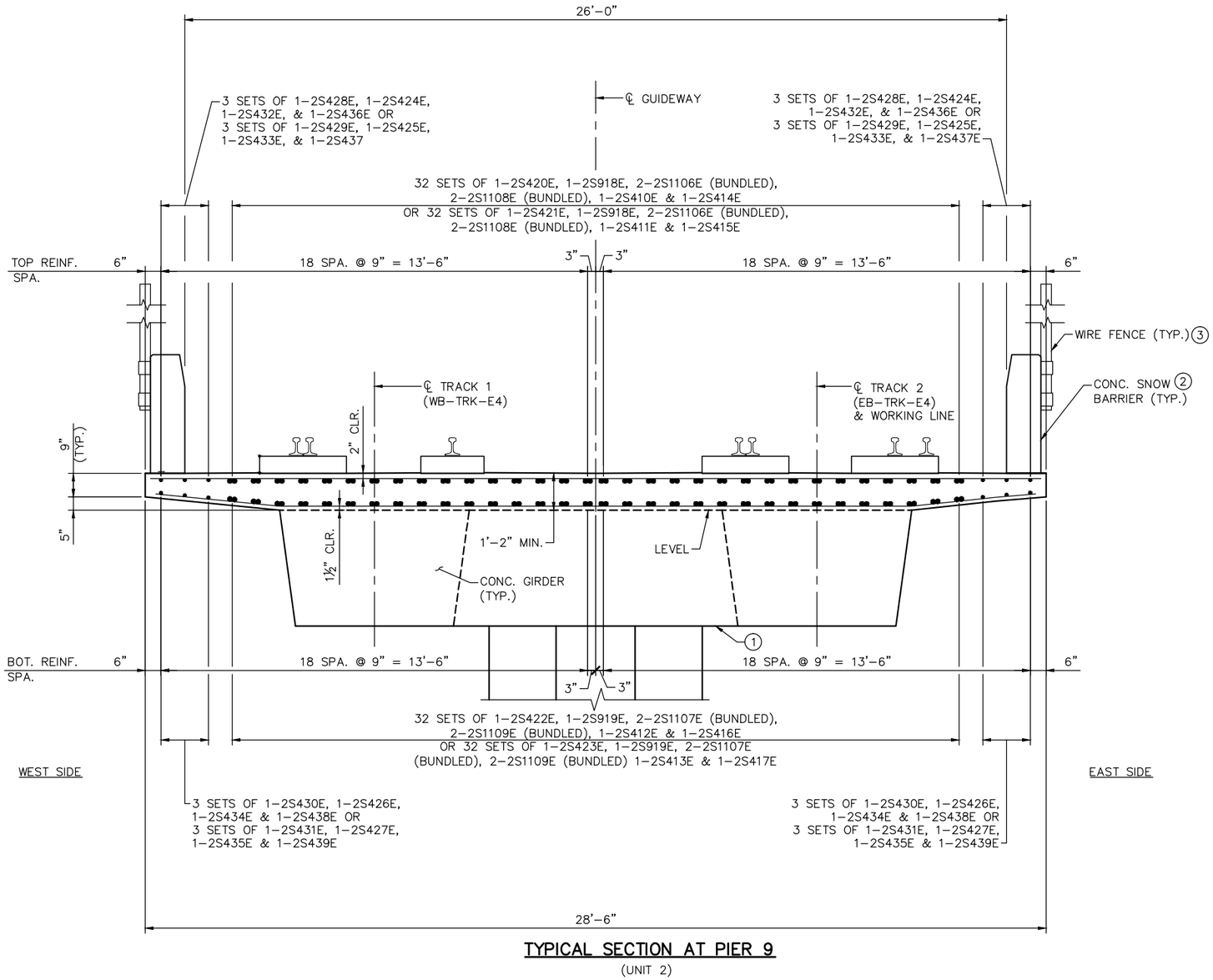

TYPICAL SECTION AT PIER 9

(UNIT 2)

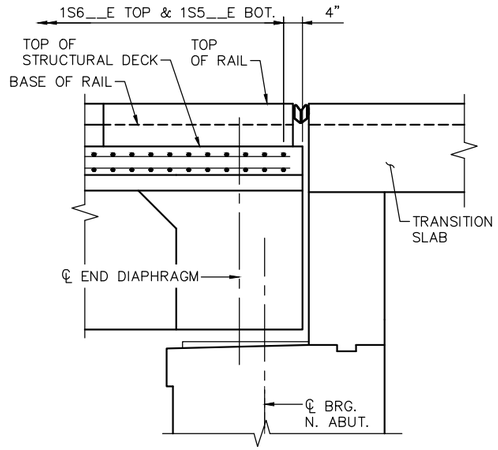

SECTION D-D

NOTES:

1. SEE SHEET 63 FOR INTEGRAL PIER CAP LIMITS AT PIER 9.
2. SEE SHEET 88 FOR CONCRETE SNOW BARRIER DETAILS.
3. SEE SHEET 89 FOR WIRE FENCE DETAILS.

NO.	DATE	BY	CHECK	DESIGN	REVISION / SUBMITTAL

DESIGNED BY: BAW | CHECKED BY: EJT
DRAWN BY: LMT | CHECKED BY: EJT

AECOM Kimley»Horn

90% SUBMISSION - 01/22/16

METROPOLITAN COUNCIL

SOUTHWEST Green Line LRT Extension

CIVIL - VOLUME 4G
LRT OVER BNSF
BRIDGE R0697
SUPERSTRUCTURE DETAILS 8

DISCIPLINE: STRUCTURES
SHEET NAME: CBRR0697-BRG-SUP-004-3

SHEET 74 OF 118

Jan, 18 2016 03:12 pm V:\3400_ADC\CAD\SEGMENT E4\PLAN SHEETS\STRUCTURES\R0697\CBRR0697-BRG-SUP-004.dwg By: lisa.thompson

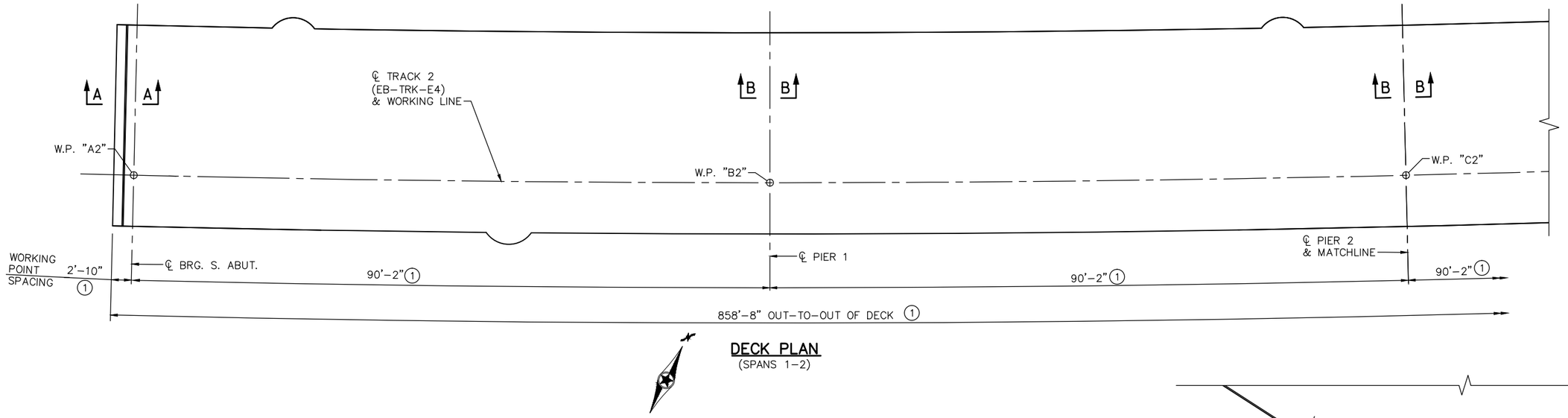

DECK PLAN
(SPANS 1–2)

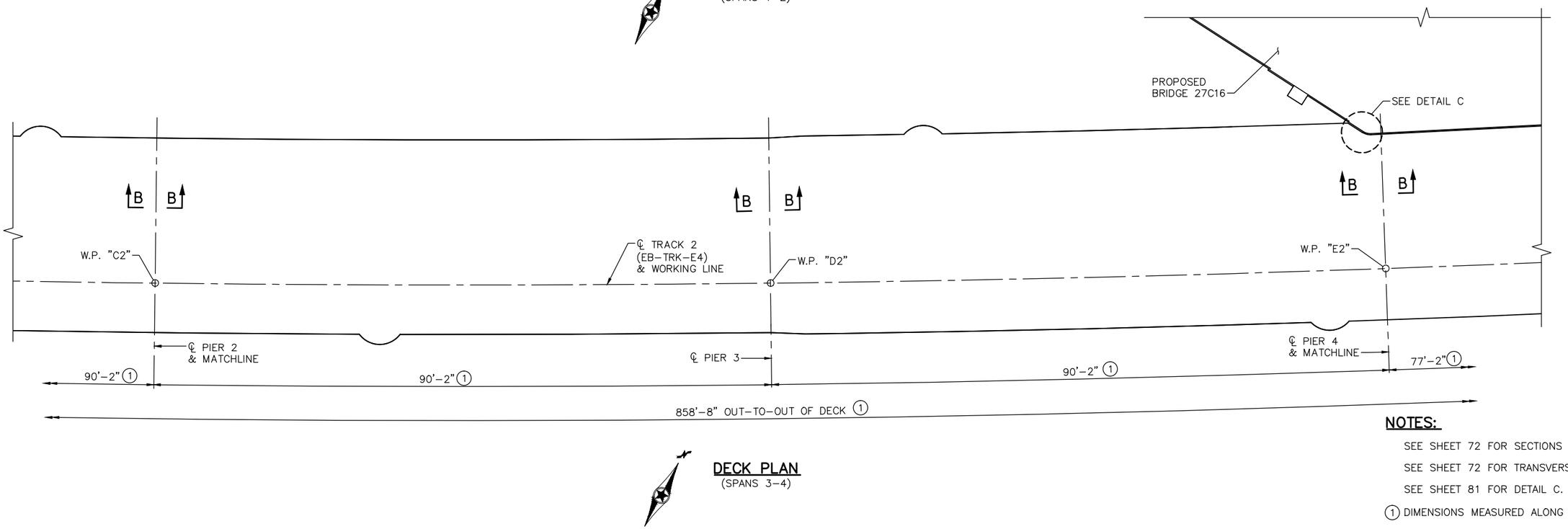

DECK PLAN
(SPANS 3–4)

NOTES:

SEE SHEET 72 FOR SECTIONS A–A & B–B.

SEE SHEET 72 FOR TRANSVERSE SECTION THRU DECK.

SEE SHEET 81 FOR DETAIL C.

1 DIMENSIONS MEASURED ALONG ℄ TRACK 2.

NO.	DATE	BY	CHECK	DESIGN	REVISION / SUBMITTAL

DESIGNED BY: BAW | CHECKED BY: EJT
DRAWN BY: LMT | CHECKED BY: EJT

AECOM Kimley»Horn

90% SUBMISSION - 01/22/16

METROPOLITAN COUNCIL

SOUTHWEST Green Line LRT Extension

CIVIL - VOLUME 4G
LRT OVER BNSF
BRIDGE R0697
SUPERSTRUCTURE DETAILS 9

DISCIPLINE: STRUCTURES

SHEET NAME: CBRR0697-BRG-SUP-004-4

SHEET 75 OF 118

Jan, 18 2016 01:45 pm v:\3400_ADC\CAD\SEGMENT E4\PLAN SHEETS\STRUCTURES\R0697\CBRR0697-BRG-SUP-004.dwg By: lisa.thompson

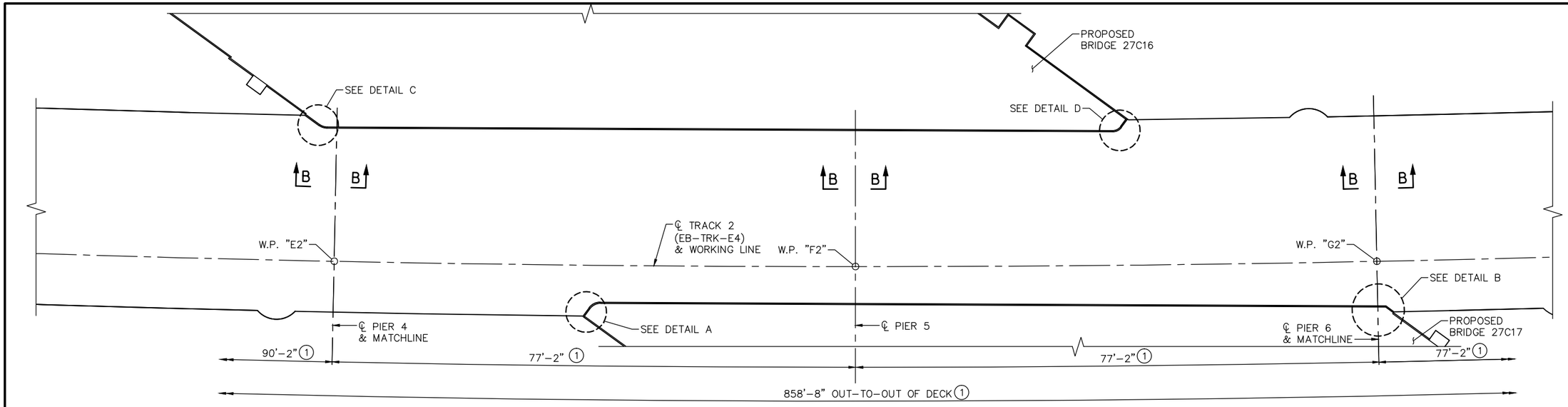

DECK PLAN
(SPANS 5–6)

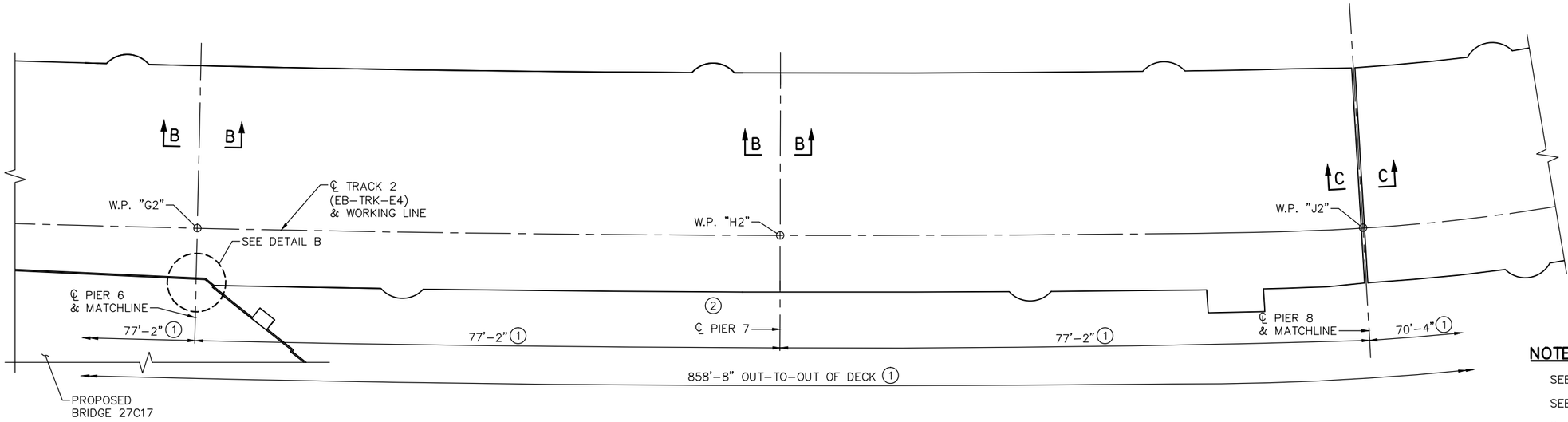

DECK PLAN
(SPANS 7–8)

NOTES:

SEE SHEET 72 FOR SECTION B–B.

SEE SHEET 73 FOR SECTION C–C.

SEE SHEET 81 FOR DETAILS A THRU D.

SEE SHEET 73 FOR TRANSVERSE SECTION THRU DECK.

(1) DIMENSIONS MEASURED ALONG ℄ TRACK 2.

NO.	DATE	BY	CHECK	DESIGN	REVISION / SUBMITTAL

DESIGNED BY: BAW | CHECKED BY: EJT
DRAWN BY: LMT | CHECKED BY: EJT

AECOM Kimley»Horn

90% SUBMISSION - 01/22/16

METROPOLITAN COUNCIL

SOUTHWEST Green Line LRT Extension

CIVIL - VOLUME 4G
LRT OVER BNSF
BRIDGE R0697
SUPERSTRUCTURE DETAILS 10

DISCIPLINE: STRUCTURES

SHEET NAME: CBRR0697-BRG-SUP-004-5

SHEET 76 OF 118

Jan, 18 2016 01:45 pm v:\3400_ADC\CAD\SEGMENT E4\PLAN SHEETS\STRUCTURES\R0697\CBRR0697-BRG-SUP-004.dwg By: lisa.thompson

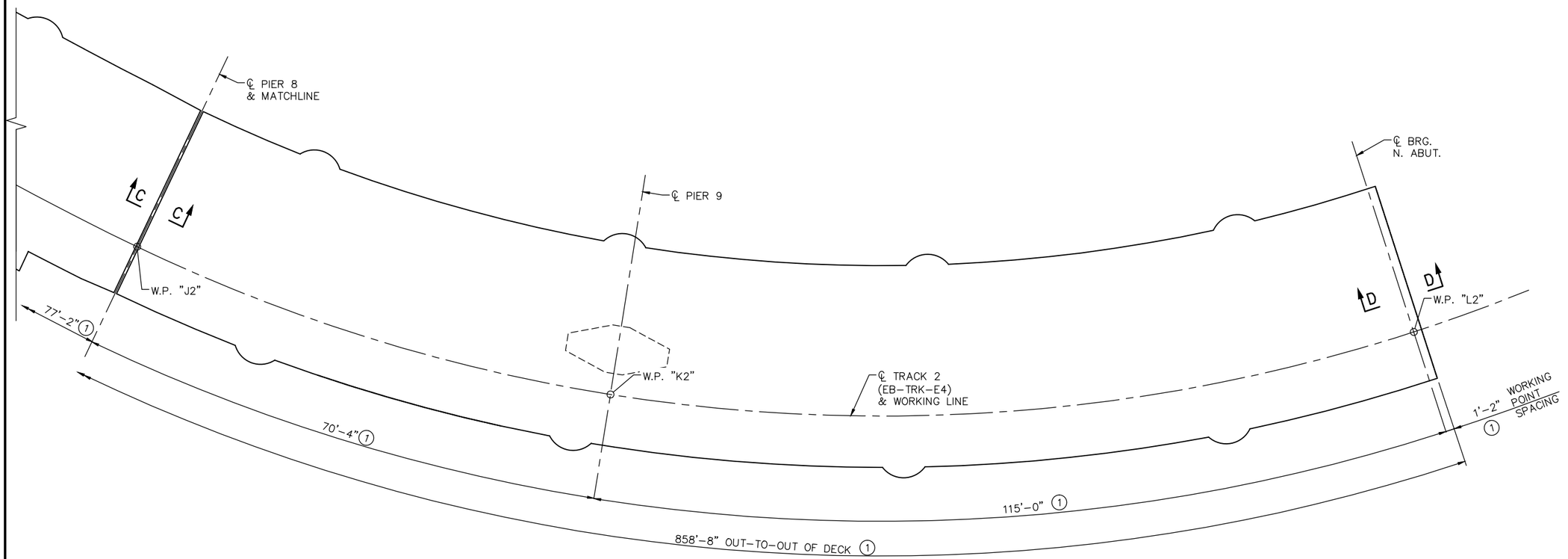

DECK PLAN
(SPANS 9-10)

NOTES:

SEE SHEET 73 FOR SECTION C-C.

SEE SHEET 74 FOR SECTION D-D.

SEE SHEET 74 FOR TRANSVERSE SECTION THRU DECK.

(1) DIMENSIONS MEASURED ALONG ℄ TRACK 2.

NO.	DATE	BY	CHECK	DESIGN	REVISION / SUBMITTAL

DESIGNED BY: BAW | CHECKED BY: EJT

DRAWN BY: LMT | CHECKED BY: EJT

AECOM Kimley»Horn

90% SUBMISSION - 01/22/16

METROPOLITAN COUNCIL

SOUTHWEST Green Line LRT Extension

CIVIL - VOLUME 4G
LRT OVER BNSF
BRIDGE R0697
SUPERSTRUCTURE DETAILS 11

DISCIPLINE: STRUCTURES

SHEET NAME: CBRR0697-BRG-SUP-004-6

SHEET 77 OF 118

Jan. 18 2016 01:45 pm V:\3400_ADC\CAD\SEGMENT E4\PLAN SHEETS\STRUCTURES\R0697\CBRR0697-BRG-SUP-004.dwg By: lisa.thompson

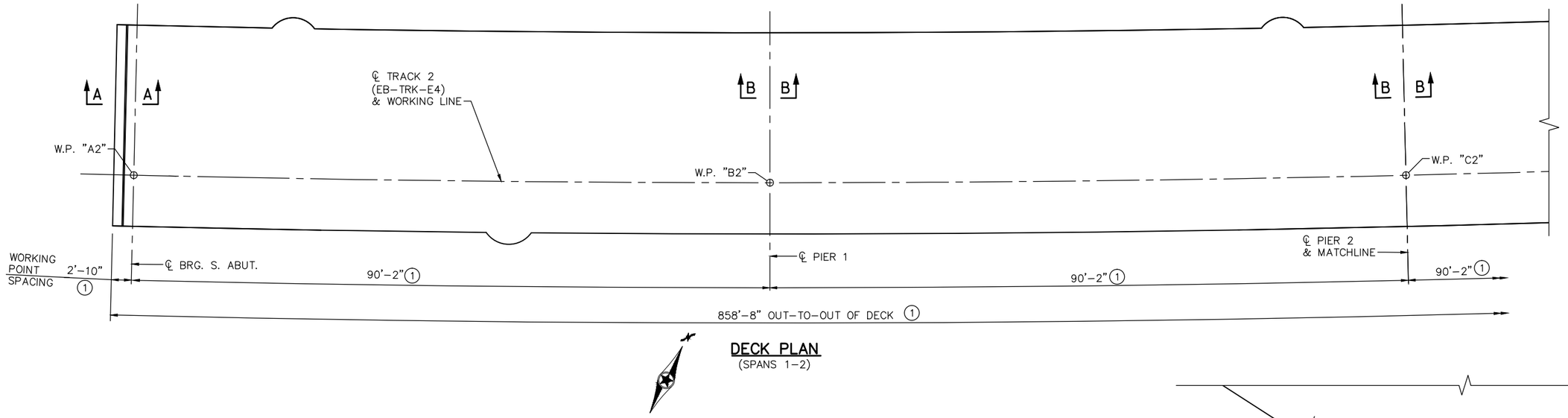

DECK PLAN
(SPANS 1–2)

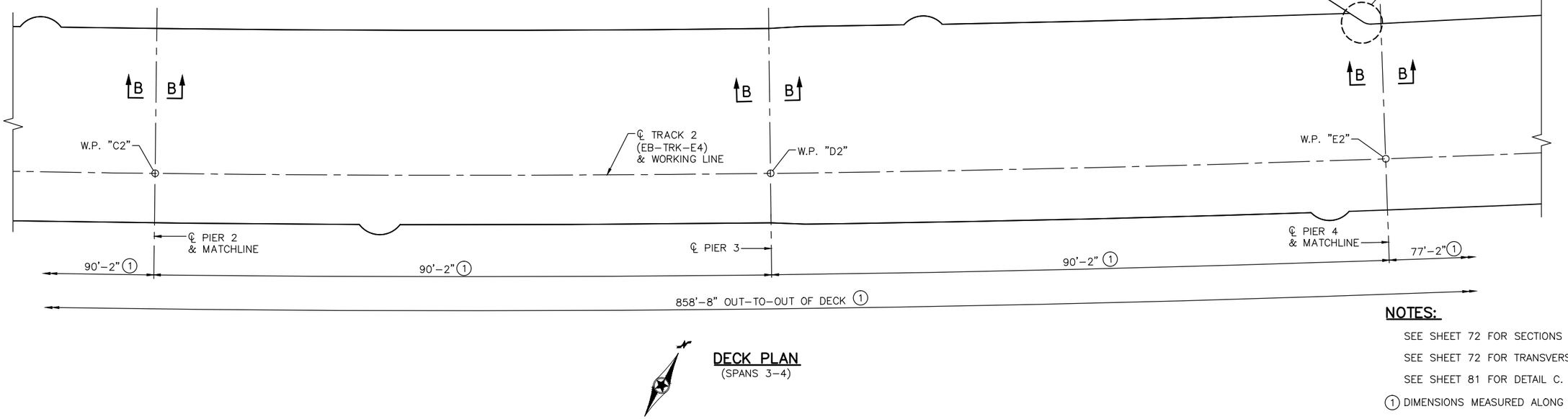

DECK PLAN
(SPANS 3–4)

NOTES:

SEE SHEET 72 FOR SECTIONS A–A & B–B.

SEE SHEET 72 FOR TRANSVERSE SECTION THRU DECK.

SEE SHEET 81 FOR DETAIL C.

1 DIMENSIONS MEASURED ALONG ℄ TRACK 2.

NO.	DATE	BY	CHECK	DESIGN	REVISION / SUBMITTAL

DESIGNED BY: BAW | CHECKED BY: EJT
DRAWN BY: LMT | CHECKED BY: EJT

AECOM Kimley»Horn

90% SUBMISSION - 01/22/16

METROPOLITAN COUNCIL

SOUTHWEST Green Line LRT Extension

CIVIL - VOLUME 4G
LRT OVER BNSF
BRIDGE R0697
SUPERSTRUCTURE DETAILS 12

DISCIPLINE: STRUCTURES

SHEET NAME: CBRR0697-BRG-SUP-005-1

SHEET 78 OF 118

Jan. 18 2016 03:39 pm V:\3400_ADC\CAD\SEGMENT E4\PLAN SHEETS\STRUCTURES\R0697\CBRR0697-BRG-SUP-005.dwg By: lisa.thompson

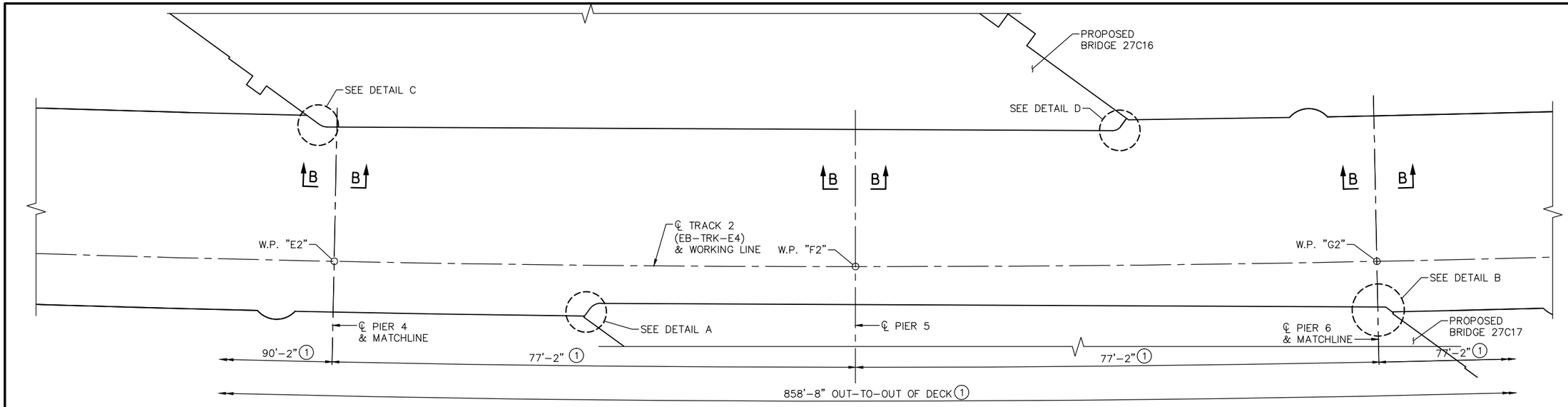

DECK PLAN
(SPANS 5–6)

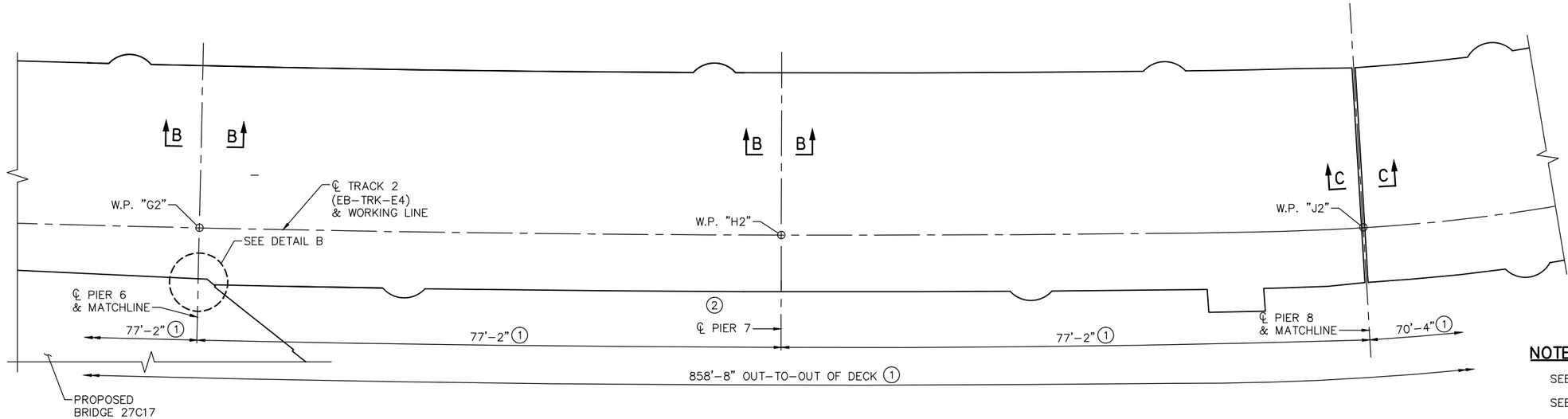

DECK PLAN
(SPANS 7–8)

NOTES:

SEE SHEET 72 FOR SECTION B–B.

SEE SHEET 73 FOR SECTION C–C.

SEE SHEET 81 FOR DETAILS A THRU D.

SEE SHEET 73 FOR TRANSVERSE SECTION THRU DECK.

(1) DIMENSIONS MEASURED ALONG ℄ TRACK 2.

NO.	DATE	BY	CHECK	DESIGN	REVISION / SUBMITTAL

DESIGNED BY: BAW | CHECKED BY: EJT
DRAWN BY: LMT | CHECKED BY: EJT

AECOM Kimley»Horn

90% SUBMISSION - 01/22/16

METROPOLITAN COUNCIL

SOUTHWEST Green Line LRT Extension

CIVIL - VOLUME 4G
LRT OVER BNSF
BRIDGE R0697
SUPERSTRUCTURE DETAILS 13

DISCIPLINE: STRUCTURES

SHEET NAME: CBRR0697-BRG-SUP-005-2

SHEET 79 OF 118

Jan, 18 2016 03:39 pm v:\3400_ADC\CAD\SEGMENT E4\PLAN SHEETS\STRUCTURES\R0697\CBRR0697-BRG-SUP-005.dwg By: lisa.thompson

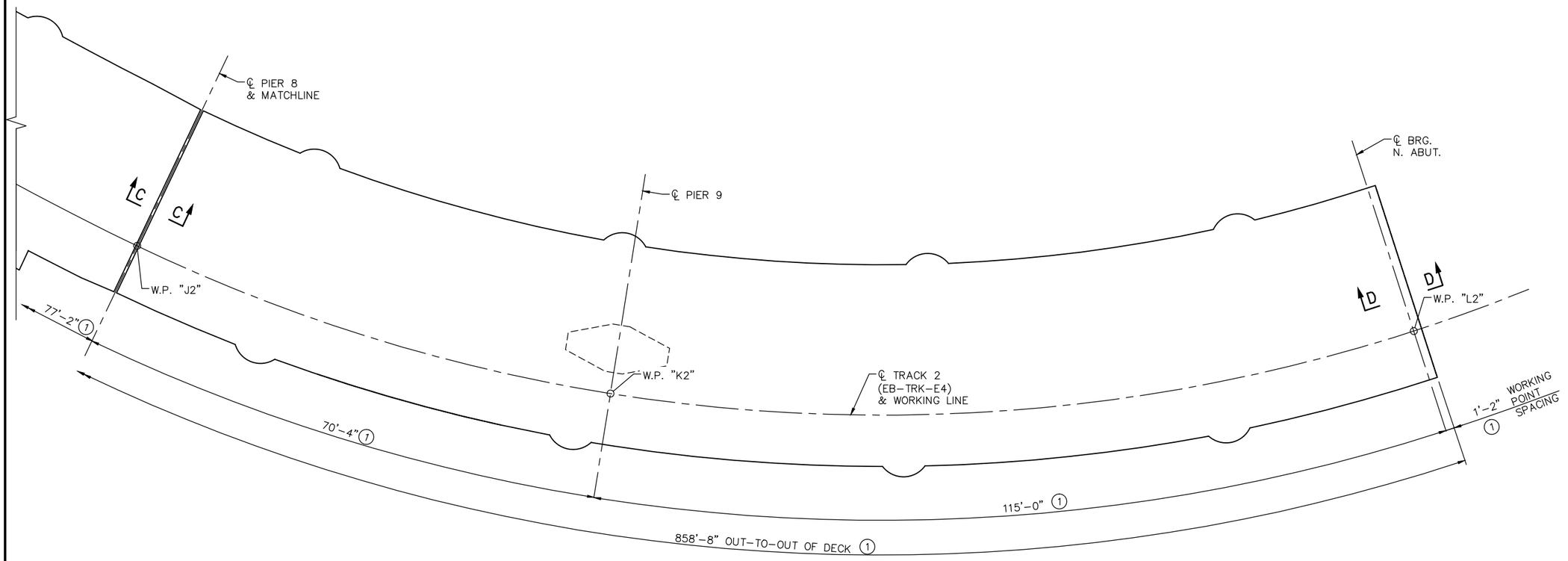

DECK PLAN
(SPANS 9-10)

NOTES:

SEE SHEET 73 FOR SECTION C-C.

SEE SHEET 74 FOR SECTION D-D.

SEE SHEET 74 FOR TRANSVERSE SECTION THRU DECK.

(1) DIMENSIONS MEASURED ALONG ℄ TRACK 2.

NO.	DATE	BY	CHECK	DESIGN	REVISION / SUBMITTAL

DESIGNED BY: BAW | CHECKED BY: EJT
DRAWN BY: LMT | CHECKED BY: EJT

AECOM Kimley»Horn

90% SUBMISSION - 01/22/16

METROPOLITAN COUNCIL

SOUTHWEST Green Line LRT Extension

CIVIL - VOLUME 4G
LRT OVER BNSF
BRIDGE R0697
SUPERSTRUCTURE DETAILS 14

DISCIPLINE: STRUCTURES
SHEET NAME: CBRR0697-BRG-SUP-005-3

SHEET 80 OF 118

Jan, 18 2016 03:39 pm V:\3400_ADC\CAD\SEGMENT E4\PLAN SHEETS\STRUCTURES\R0697\CBRR0697-BRG-SUP-005.dwg By: lisa.thompson

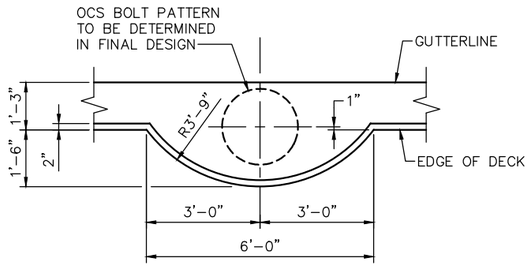

OCS BLISTER AT CURB

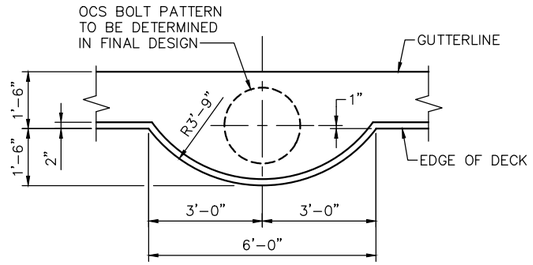

OCS BLISTER AT TYPE P-4 BLISTER

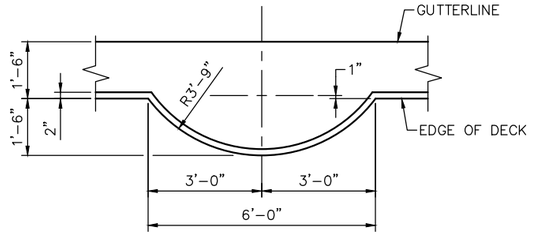

RAIL LUBRICATOR BLISTER

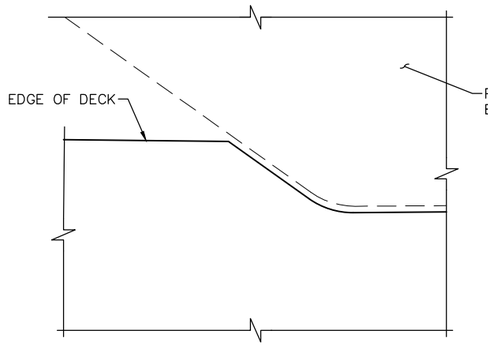

DETAIL C

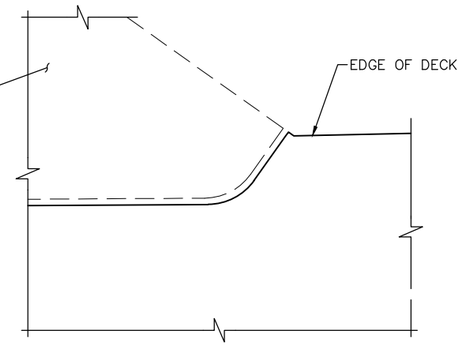

DETAIL D

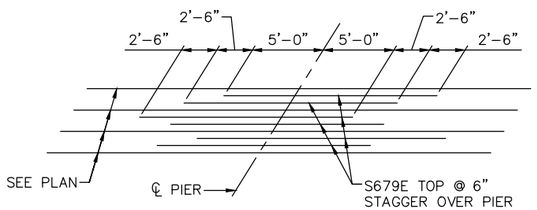

TOP SLAB REINFORCEMENT AT PIER

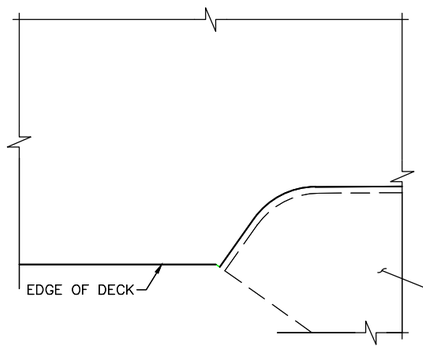

DETAIL A

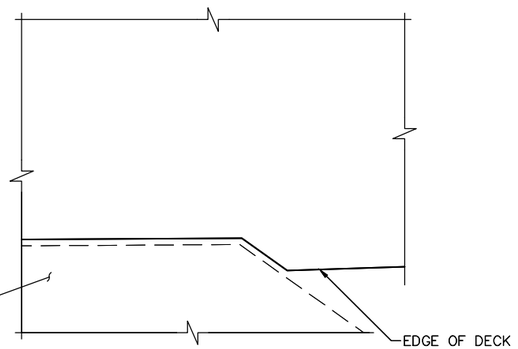

DETAIL B

NO.	DATE	BY	CHECK	DESIGN	REVISION / SUBMITTAL

DESIGNED BY: BAW | CHECKED BY: EJT
DRAWN BY: LMT | CHECKED BY: EJT

AECOM Kimley»Horn

90% SUBMISSION - 01/22/16

METROPOLITAN COUNCIL

SOUTHWEST Green Line LRT Extension

CIVIL - VOLUME 4G
LRT OVER BNSF
BRIDGE R0697
SUPERSTRUCTURE DETAILS 15

DISCIPLINE: STRUCTURES
SHEET NAME: CBRR0697-BRG-SUP-004-7

SHEET 81 OF 118

Jan, 18 2016 03:39 pm V:\3400_ADC\CAD\SEGMENT E4\PLAN SHEETS\STRUCTURES\R0697\CBRR0697-BRG-SUP-004.dwg By: lisa.thompson

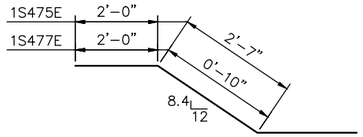

1S475E & 1S477E

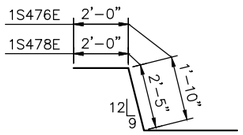

1S476E & 1S478E

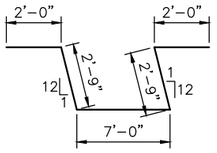

1S474E

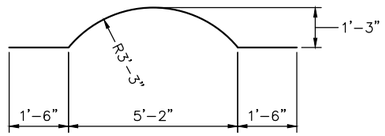

1S473E & 2S405E

BILL OF REINFORCEMENT FOR SUPERSTRUCTURE (UNIT 1)

BAR	NO.	LENGTH	SHAPE	LOCATION
1SE	0	'-"	0	0
1SE	0	'-"	0	0
1SE	0	'-"	0	0

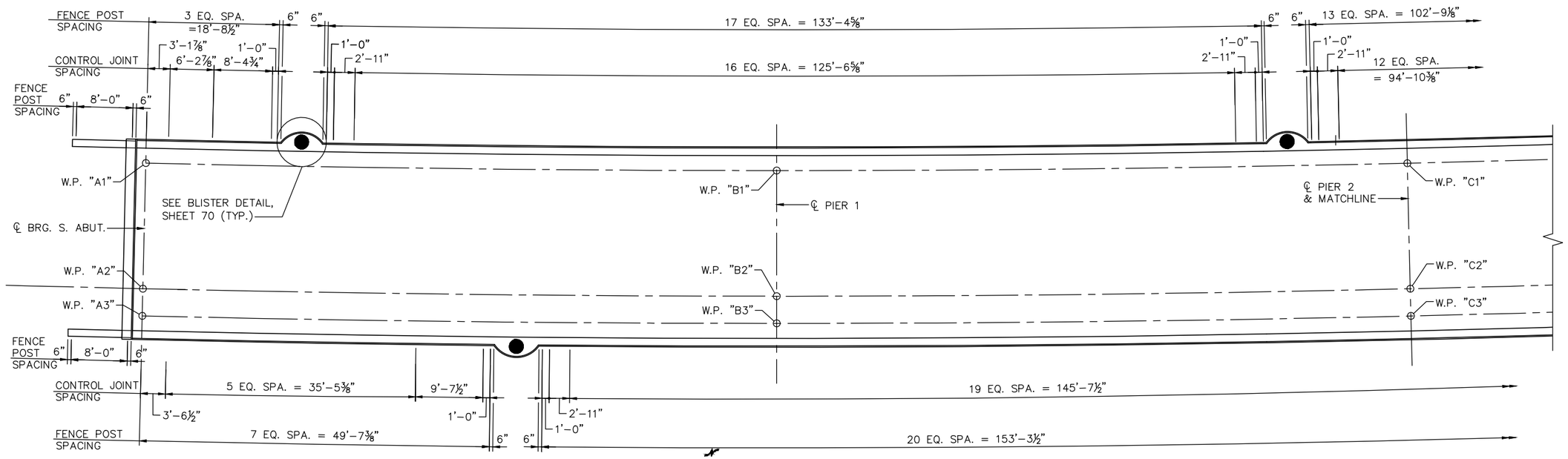

DECK PLAN
(SPANS 1–2)

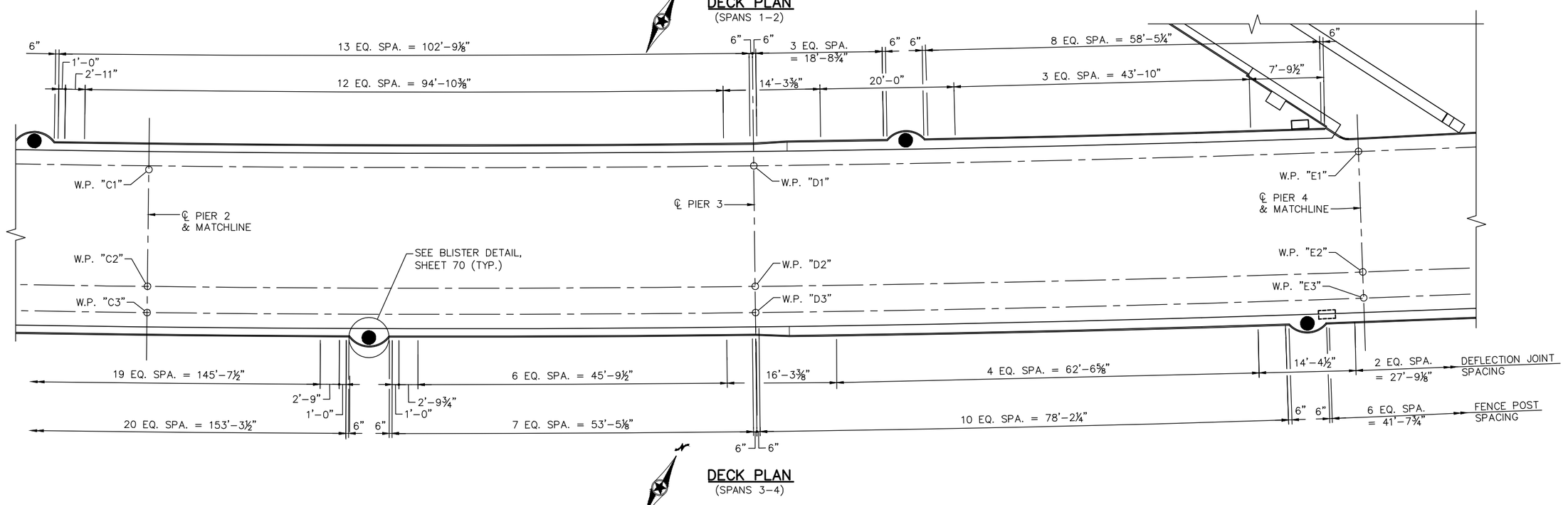

DECK PLAN
(SPANS 3–4)

NO.	DATE	BY	CHECK	DESIGN	REVISION / SUBMITTAL

DESIGNED BY: SSB | CHECKED BY: EJT
DRAWN BY: LMT | CHECKED BY: EJT

AECOM Kimley»Horn

90% SUBMISSION - 01/22/16

METROPOLITAN COUNCIL

SOUTHWEST Green Line LRT Extension

CIVIL - VOLUME 4G
LRT OVER BNSF
BRIDGE R0697
RAILING DETAILS 1

DISCIPLINE: STRUCTURES

SHEET NAME: CBRR0697-BRG-SUP-006-1

SHEET 83 OF 118

Jan, 18 2016 01:46 pm V:\3400_ADC\CAD\SEGMENT E4\PLAN SHEETS\STRUCTURES\R0697\CBRR0697-BRG-SUP-006.dwg By: lisa.thompson

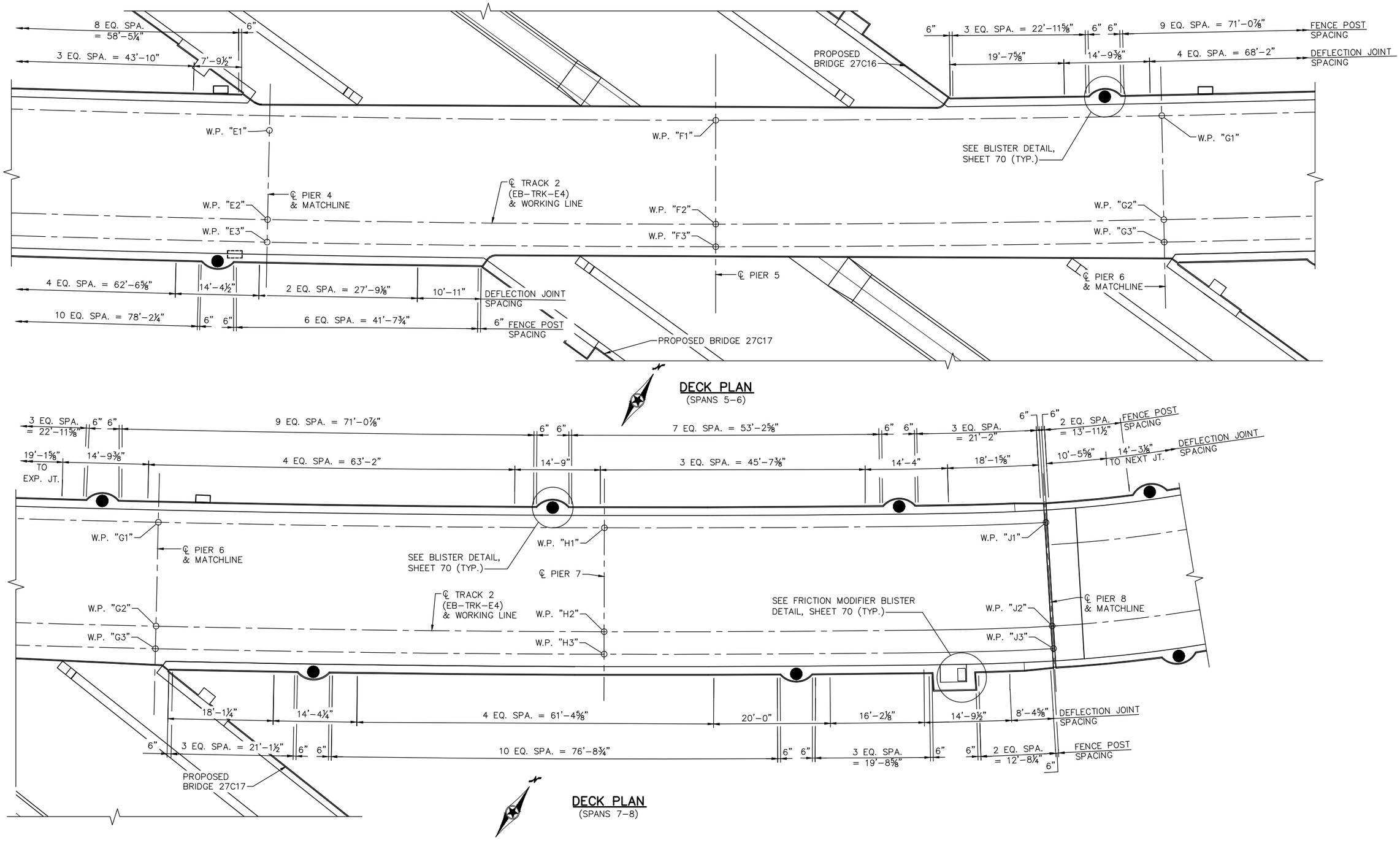

NO.	DATE	BY	CHECK	DESIGN	REVISION / SUBMITTAL

DESIGNED BY: SSB | CHECKED BY: EJT
DRAWN BY: LMT | CHECKED BY: EJT

AECOM Kimley»Horn

90% SUBMISSION - 01/22/16

METROPOLITAN COUNCIL

SOUTHWEST Green Line LRT Extension

CIVIL - VOLUME 4G
LRT OVER BNSF
BRIDGE R0697
RAILING DETAILS 2

DISCIPLINE: STRUCTURES

SHEET NAME: CBRR0697-BRG-SUP-006-2

SHEET 84 OF 118

Jan. 18 2016 01:46 pm V:\3400_ADC\CAD\SEGMENT E4\PLAN SHEETS\STRUCTURES\R0697\CBRR0697-BRG-SUP-006.dwg By: lisa.thompson

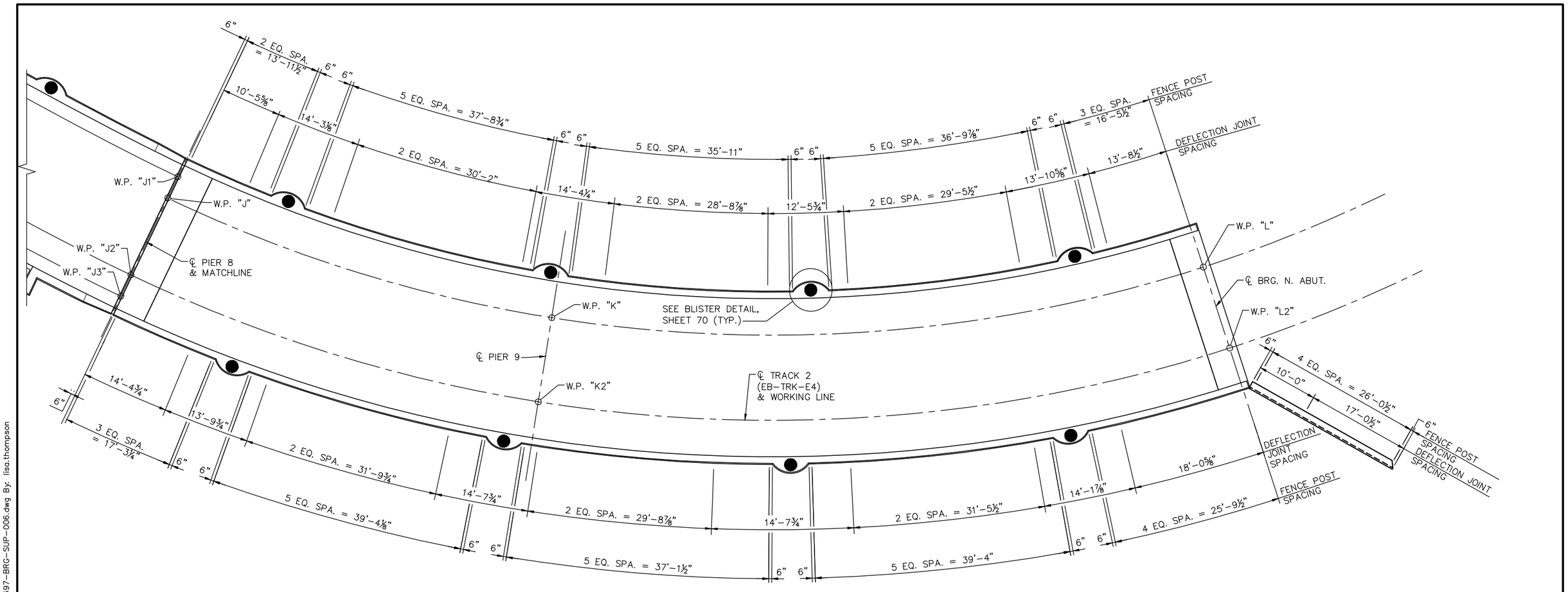

DECK PLAN
(SPANS 9–10)

NO.	DATE	BY	CHECK	DESIGN	REVISION / SUBMITTAL

DESIGNED BY: SSB | CHECKED BY: EJT
DRAWN BY: LMT | CHECKED BY: EJT

AECOM Kimley»Horn

90% SUBMISSION - 01/22/16

METROPOLITAN COUNCIL

SOUTHWEST Green Line LRT Extension

CIVIL - VOLUME 4G
LRT OVER BNSF
BRIDGE R0697
RAILING DETAILS 3

DISCIPLINE: STRUCTURES
SHEET NAME: CBRR0697-BRG-SUP-006-3

SHEET 85 OF 118

Jan, 18 2016 01:47 pm V:\3400_ADC\CAD\SEGMENT E4\PLAN SHEETS\STRUCTURES\R0697\CBRR0697-BRG-SUP-006.dwg By: lisa.thompson

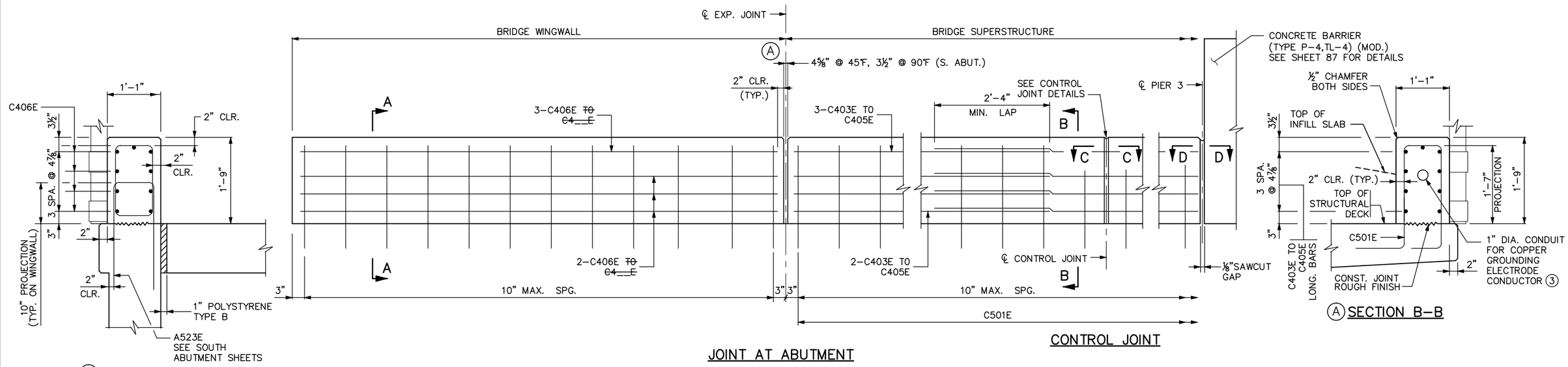

CURB DOES NOT MEET CRASH TEST REQUIREMENTS OF NCHRP REPORT 350

BILL OF REINFORCEMENT FOR CURB				
BAR	NO.	LENGTH	SHAPE	LOCATION
C501E	654	5'-3"	⊔	CURB BASE VERTICAL
~~C502E~~	~~—~~	~~5'-5"~~	⊔	~~CURB BASE VERTICAL~~
C403E	72	60'-0"	——	CURB BASE LONGIT.
C404E	9	39'-6"	——	CURB BASE LONGIT.
C405E	9	41'-4"	——	CURB BASE LONGIT.
C406E	18	8'-8"	——	CURB BASE LONGIT.

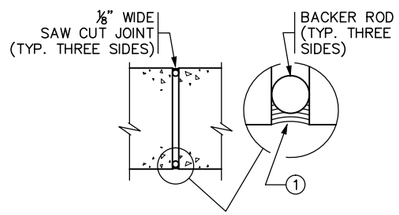

SECTION D-D

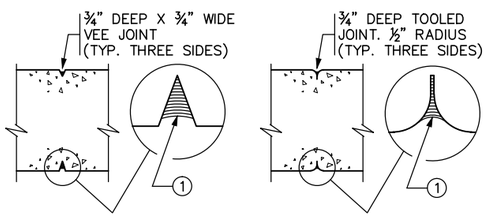

SECTION C-C
CONTRACTOR OPTION 1

SECTION C-C
CONTRACTOR OPTION 2

CONTROL JOINT DETAILS

WHEN USING SLIP FORM METHOD TO PLACE THE CONCRETE, CUT JOINT 3 INCHES DEEP USING MARGIN TROWEL OR SIMILAR MEANS IMMEDIATELY AFTER CONCRETE PLACEMENT (TYP. THREE SIDES)

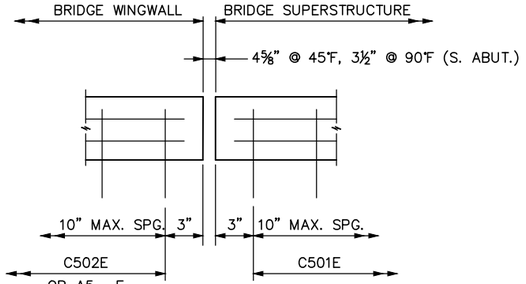

DETAIL "A" (2)(A)

~~(USE ONLY WITH STRIP SEAL EXPANSION DEVICE) (EXPANSION DEVICE NOT SHOWN)~~

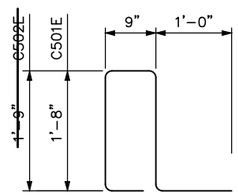

A C501E, ~~C502E~~

SHEET MODIFICATION:
A DENOTES MODIFICATION TO STANDARD SHEET

GENERAL NOTES

CONTINUOUSLY GROUND ALL METAL RAILINGS; SEE THE SPECIAL PROVISIONS. REFER TO THE ELECTRICAL PLANS AND ELECTRICAL SPECIAL PROVISIONS FOR DETAILS REGARDING BONDING MULTIPLE ELECTRICAL GROUNDING SYSTEMS.

~~PAYMENT LENGTH SHALL BE MEASURED BETWEEN THE OUTSIDE FACES OF THE CONCRETE CURB.~~

(A) CONCRETE CURB = 284 LBS./FT. (0.070 CU. YDS./FT.)

FINISH ALL EDGES OF CURB WITH ½" CHAMFER, EXCEPT WHERE OTHERWISE NOTED.

MAXIMUM SPACING OF CONTROL JOINTS ON SUPERSTRUCTURE, APPROACH AND WINGWALL SHALL BE 10 FT. SEE SUPERSTRUCTURE SHEET FOR JOINT SPACING.

~~CONCRETE CURB QUANTITIES ARE LISTED IN SUMMARY OF QUANTITIES FOR SUPERSTRUCTURE.~~

(1) JOINT SEALANT PER MnDOT APPROVED/QUALIFIED PRODUCTS LIST – CRACK AND JOINT MATERIALS – SILICONE JOINT SEALERS.

(2) REFER TO STANDARD FIGURE 5-397.632 FOR COVER PLATE DETAILS.

(3) GROUNDING SYSTEM, SEE SYSTEMWIDE ELECTRICAL FOR DETAILS.

REVISION:

APPROVED: NOVEMBER 6, 2013
Nancy Daubenberger
STATE BRIDGE ENGINEER

CERTIFIED BY _____ LICENSED PROFESSIONAL ENGINEER — DATE
NAME: ENGINEER LIC. NO. #####

TITLE: CONCRETE CURB ~~FOR USE WITH ORNAMENTAL RAILING~~

DES: SSB	DR: LMT	APPROVED:
CHK: EJT	CHK: EJT	

SHEET NO. 86 OF 118 SHEETS

FIG. 5-397.167 (MOD.)

BRIDGE NO. R0697

Jan. 18 2016 01:47 pm V:\3400_ADC\CAD\SEGMENT E4\PLAN SHEETS\STRUCTURES\R0697\CBRR0697-BRG-RAL-001.dwg By: lisa.thompson

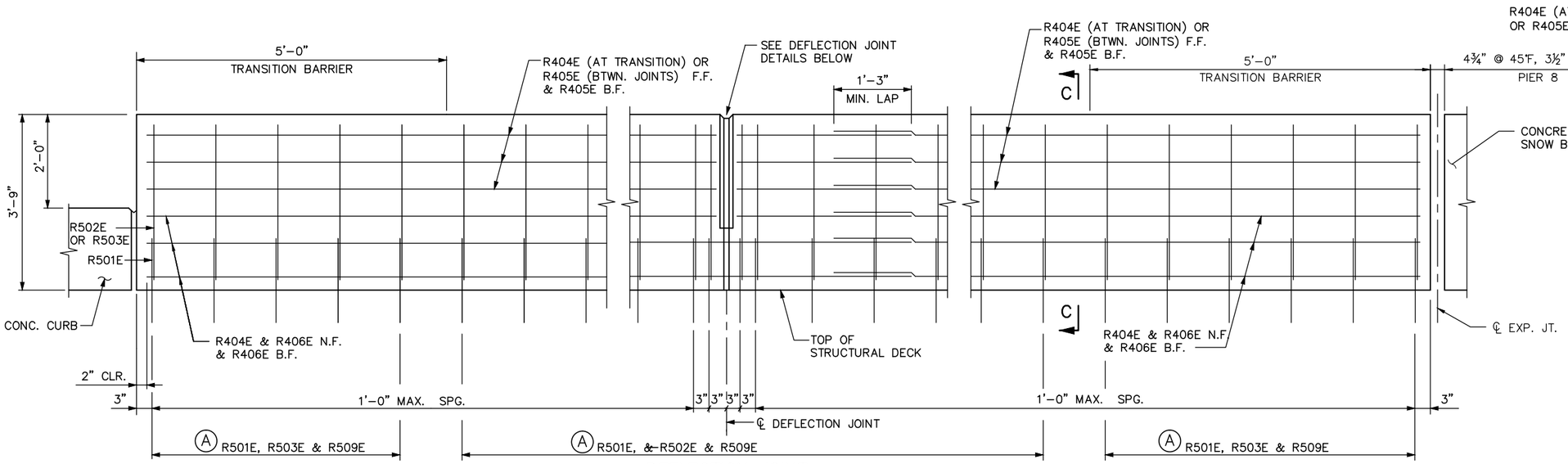

DEFLECTION JOINT

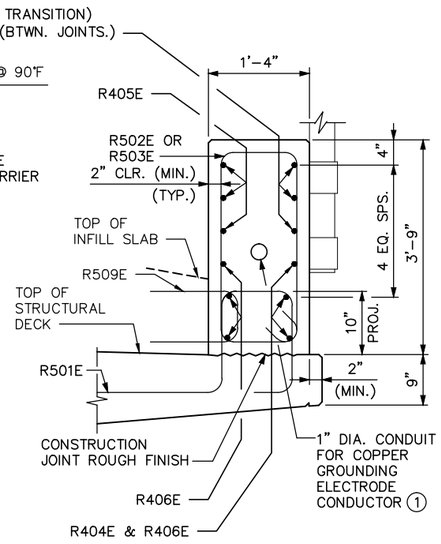

Ⓐ SECTION C–C

Ⓐ INSIDE ELEVATION OF BARRIER

~~BARRIER MEETS TEST LEVEL 4 REQUIREMENTS OF NCHRP REPORT 350~~

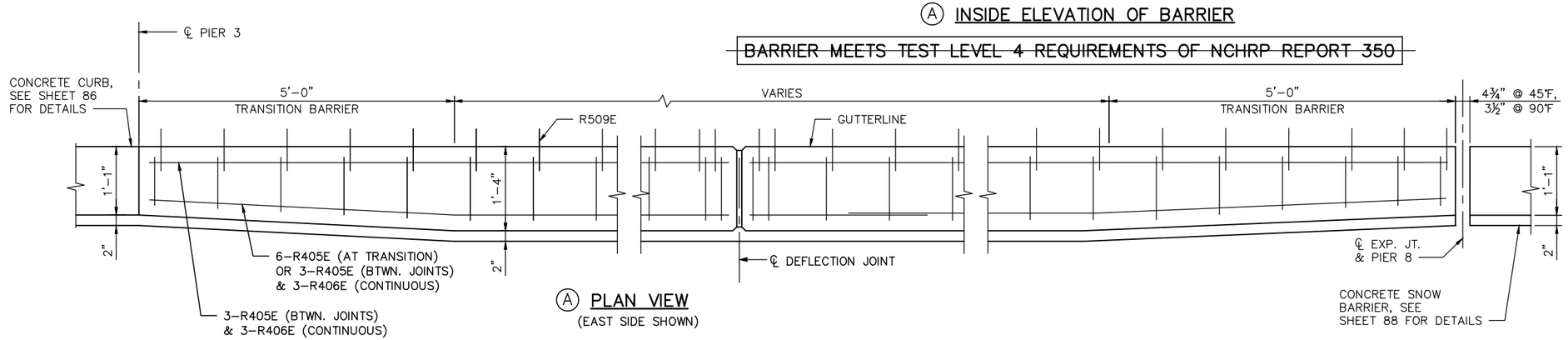

Ⓐ PLAN VIEW
(EAST SIDE SHOWN)

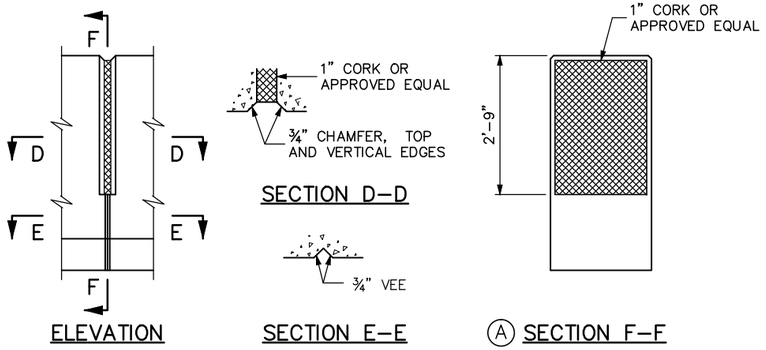

ELEVATION — SECTION D–D — SECTION E–E — Ⓐ SECTION F–F

DEFLECTION JOINT DETAILS

ESTIMATED QUANTITY OF CORK PER JOINT = 2.15 SQ. FT.

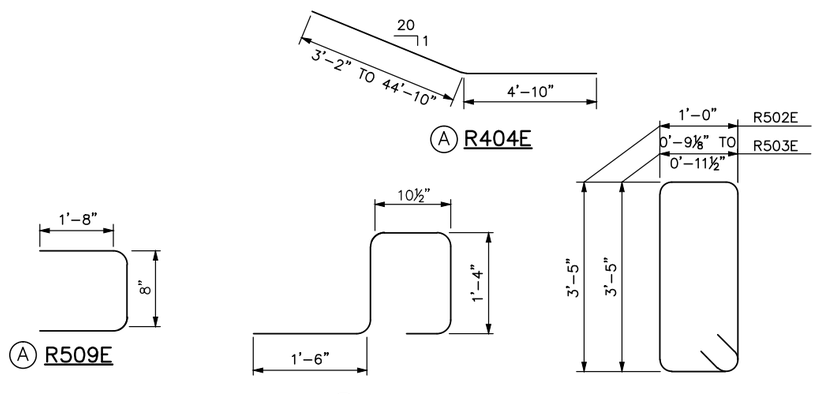

SHEET MODIFICATION:
Ⓐ DENOTES MODIFICATION TO STANDARD SHEET

BILL OF REINFORCEMENT FOR BARRIER

BAR	NO.	LENGTH	SHAPE	LOCATION
R501E	573	5'-7"	BENT	BARRIER, VERTICAL
R502E	553	9'-9"	BENT	BARRIER, VERTICAL
R503E	4 SETS OF 5	9'-4" TO 9'-8"	BENT	BARRIER, VERTICAL
R404E	24	8'-0" TO 49'-8"	BENT	BARRIER END LONGIT.
R405E	210	8'-4" TO 20'-1"	STR.	BARRIER LONGIT.
R406E	60	41'-1" TO 51'-7"	STR.	BARRIER, LONGIT.
~~R407E~~	~~0~~	~~'-"~~	~~STR.~~	~~BARRIER, LONGIT.~~
~~R408E~~	~~0~~	~~'-"~~	~~STR.~~	~~BARRIER, LONGIT.~~
R509E	573	4'-0"	BENT	INFILL SLAB

GENERAL NOTES

~~LENGTH OF "TYPE P-4 (TL-4) RAILING CONCRETE (3Y46 OR 3Y46A)" FOR PAYMENT SHALL BE MEASURED BETWEEN THE OUTSIDE FACES OF THE CONCRETE BARRIER.~~

CONCRETE BARRIER = 750 LBS./FT. (0.185 CU. YDS./FT.)

FINISH ALL EDGES OF BARRIER WITH ½" VEE, EXCEPT WHERE OTHERWISE NOTED.

MAXIMUM SPACING OF CONCRETE DEFLECTION JOINTS SHALL BE 20 FT.

SEE SUPERSTRUCTURE SHEET FOR JOINT SPACING.

~~GUARDRAIL CONNECTION TO BE STRUCTURAL STEEL, Mn/DOT SPEC. 3306.~~

GALVANIZE STRUCTURAL STEEL PER Mn/DOT SPEC. 3394 AFTER FABRICATION.

~~GUARDRAIL CONNECTION, CORK, AND NAME PLATE TO BE CONSIDERED INCIDENTAL TO "TYPE P-4 (TL-4) RAILING CONCRETE (3Y46 OR 3Y46A)".~~

~~BARRIER QUANTITIES ARE LISTED IN SUMMARY OF QUANTITIES FOR SUPERSTRUCTURE.~~

(1) GROUNDING SYSTEM, SEE SYSTEM WIDE ELECTRICAL FOR DETAILS.

FIG. 5-397.173 (MOD.)

REVISED: 04-17-2013

APPROVED: JULY 25, 2005
Daniel L Morgan
STATE BRIDGE ENGINEER

CERTIFIED BY _____ 1/22/16
LICENSED PROFESSIONAL ENGINEER — DATE
NAME: ENGINEER LIC. NO. #####

TITLE: CONCRETE BARRIER (TYPE P-4, TL-4) ~~WITH INTEGRAL END POST (WITH CONC. WEARING COURSE)~~

DES: HLR	DR: LMT	APPROVED:
CHK: EJT	CHK: EJT	

SHEET NO. 87 OF 118 SHEETS

BRIDGE NO. R0697

Jan. 18 2016 01:47 pm V:\3400_ADC\CAD\SEGMENT E4\PLAN SHEETS\STRUCTURES\R0697\CBRR0697-BRG-RAL-001.dwg By: lisa.thompson

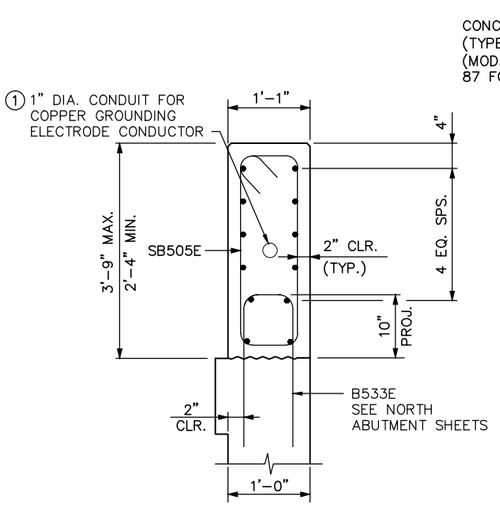

SECTION A–A

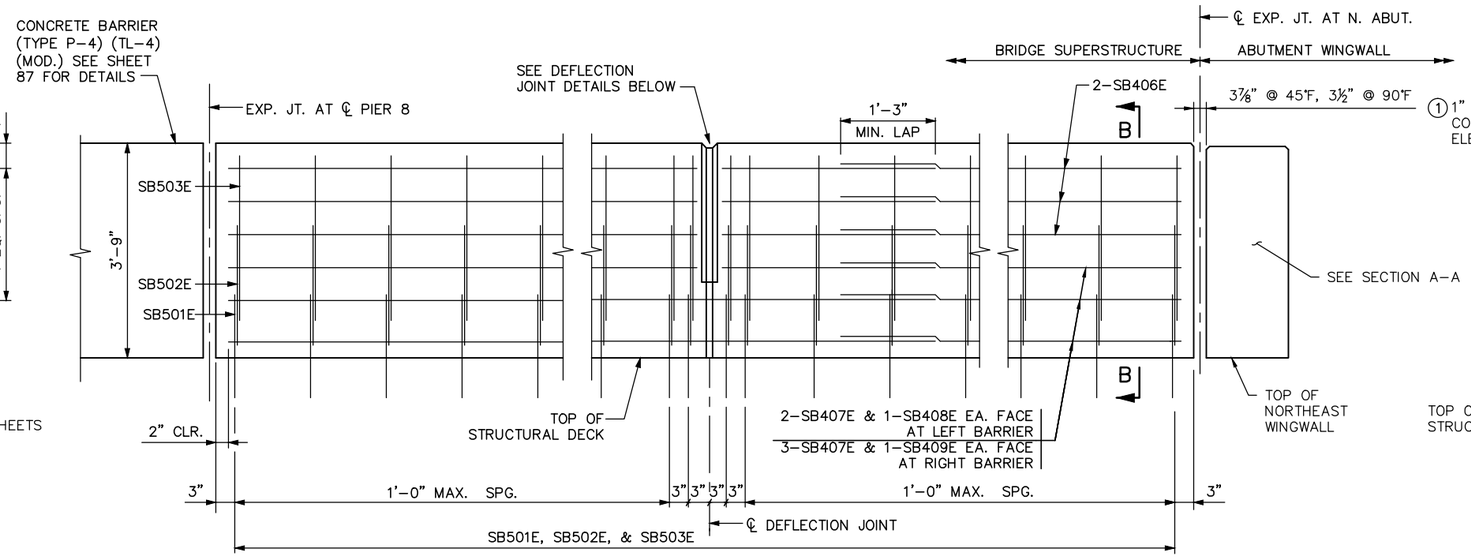

INSIDE ELEVATION OF BARRIER

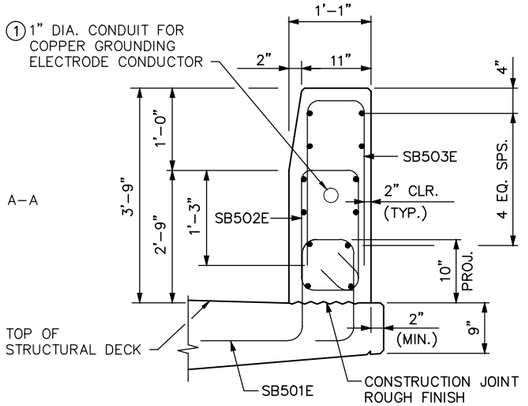

SECTION B–B

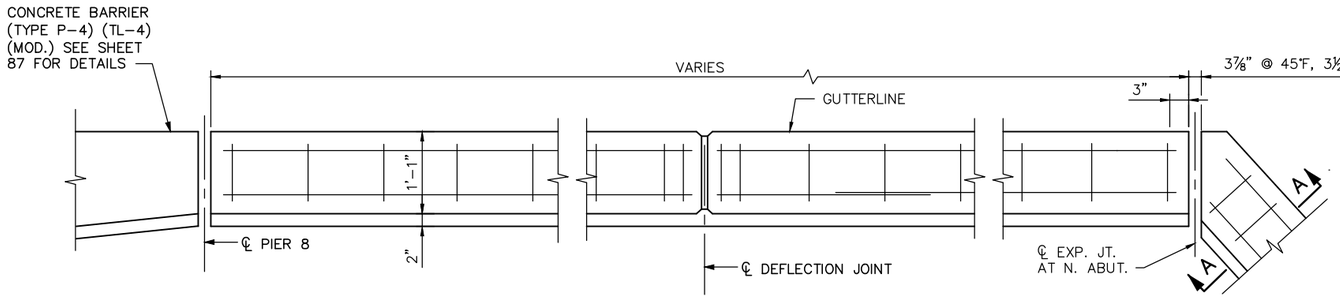

PLAN VIEW

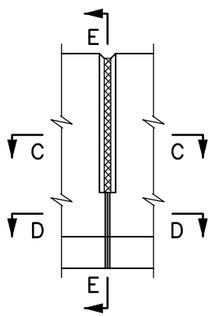

ELEVATION

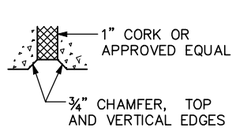

SECTION C–C

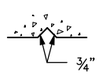

SECTION D–D

DEFLECTION JOINT DETAILS

ESTIMATED QUANTITY OF CORK PER JOINT = 2.55 SQ. FT.

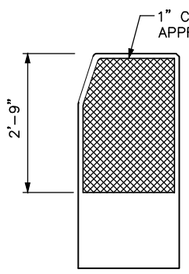

SECTION E–E

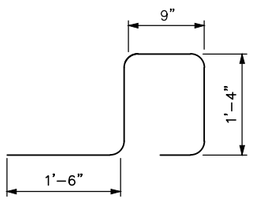

SB501E

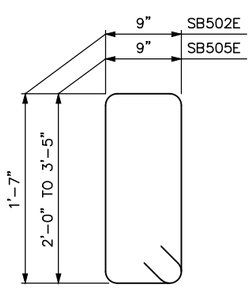

SB502E & SB505E

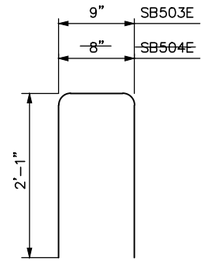

SB503E ~~& SB504E~~

BILL OF REINFORCEMENT FOR BARRIER				
BAR	NO.	LENGTH	SHAPE	LOCATION
SB501E	390	5'-6"	BENT	BARRIER VERTICAL
SB502E	390	5'-7"	BENT	BARRIER VERTICAL
SB503E	390	4'-11"	BENT	BARRIER VERTICAL
~~SB504E~~	~~———~~	~~———~~	~~BENT~~	~~BARRIER VERTICAL~~
SB505E	27	6'-5" TO 9'-3"	BENT	BARRIER VERTICAL
SB406E	144	10'-0" TO 18'-7"	———	BARRIER LONGITUDINAL
SB407E	30	60'-0"	———	BARRIER LONGITUDINAL
SB408E	6	53'-6"	———	BARRIER LONGITUDINAL
SB409E	9	14'-6"	———	BARRIER LONGITUDINAL

GENERAL NOTES

CONCRETE SNOW BARRIER = 597 LBS./FT. (0.147 CU. YDS./FT.)

FINISH ALL EDGES OF BARRIER WITH ½" VEE, EXCEPT WHERE OTHERWISE NOTED.

MAXIMUM SPACING OF CONCRETE DEFLECTION JOINTS SHALL BE 20 FT.

SEE SUPERSTRUCTURE SHEET FOR JOINT SPACING.

① GROUNDING SYSTEM, SEE SYSTEM WIDE ELECTRICAL FOR DETAILS.

NO.	DATE	BY	CHECK	DESIGN	REVISION / SUBMITTAL

DESIGNED BY: HLR CHECKED BY: EJT
DRAWN BY: HLR CHECKED BY: EJT

AECOM Kimley»Horn

90% SUBMISSION - 01/22/16

METROPOLITAN COUNCIL

SOUTHWEST Green Line LRT Extension

CIVIL - VOLUME 4G
LRT OVER BNSF
BRIDGE R0697
CONCRETE SNOW BARRIER

DISCIPLINE: STRUCTURES

SHEET NAME: CBRR0697-BRG-RAL-002

SHEET 88 OF 118

Jan, 18 2016 01:47 pm V:\3400_ADC\CAD\SEGMENT E4\PLAN SHEETS\STRUCTURES\R0697\CBRR0697-BRG-RAL-002.dwg By: lisa.thompson

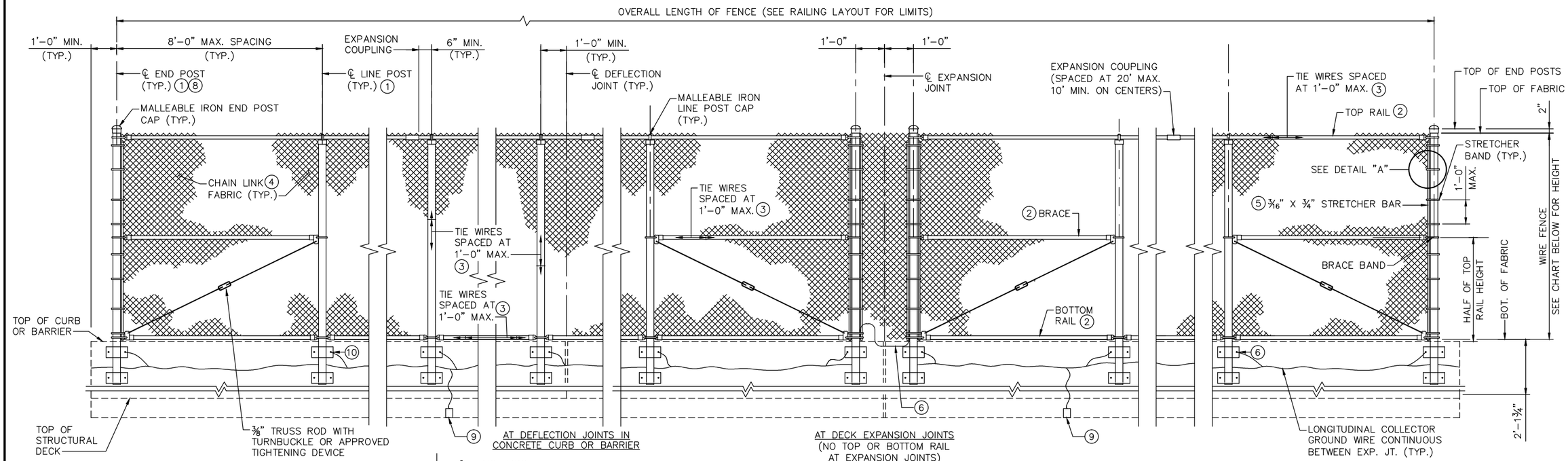

OUTSIDE ELEVATION OF WIRE FENCE

SPANS	WIRE FENCE HEIGHT
1–3	10'–0"
4–10	8'–0"

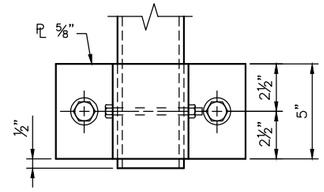

ELEVATION

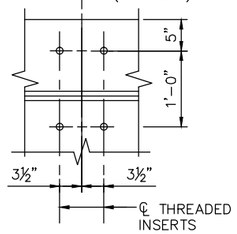

BOLT SETTING DETAIL

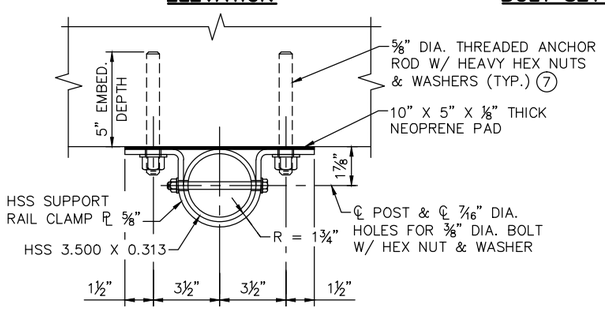

HSS CLAMP CONNECTION DETAIL

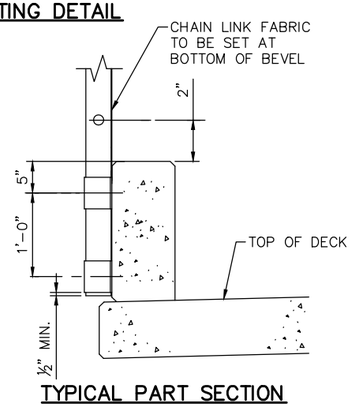

TYPICAL PART SECTION

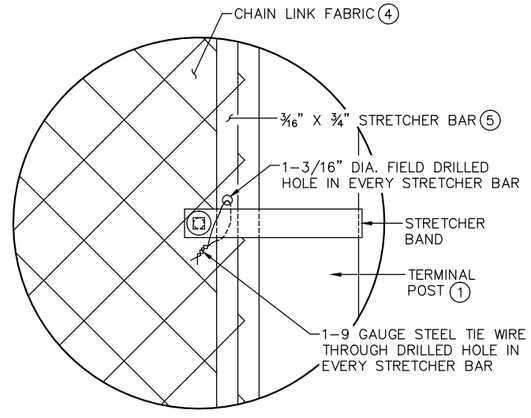

DETAIL "A"

NOTES:

1. GALVANIZED HSS 3.500 X 0.313 PER MNDOT SPEC. 3306.
2. GALVANIZED HSS 1.660 X 0.140 PER MNDOT SPEC. 3306.
3. 9 GAUGE GALVANIZED STEEL TIE WIRES ATTACH CHAIN LINK FABRIC TO HSS.
4. 9 GAUGE GALVANIZED STEEL CHAIN LINK FABRIC, 2" MESH, KNUCKLE SELVAGE TOP AND BOTTOM.
5. CONTRACTOR MUST FIELD DRILL ONE 3/16" DIA. HOLE IN EVERY STRETCHER BAR AND USE A 9 GALVANIZED GAUGE STEEL TIE WIRE TO TIE ON STRETCHER BAND AND CHAIN LINK FABRIC TOGETHER. LOCATE DRILLED HOLE FOR TIE WIRE AT APPROXIMATE MID–HEIGHT OF FENCE.
6. AT ALL SLAB EXPANSION JOINTS, BOND THE POSTS TOGETHER. ATTACH 6 AWG COPPER STRANDED WIRE TO STEEL POSTS WITH UL LISTED HARDWARE AS SHOWN WITH 6" EXCESS OF WIRE TO ALLOW FOR EXPANSION.
7. 5/8" DIA THREADED ANCHOR RODS MUST BE ASTM–A36. EMBED THREADED RODS INTO PARAPET WALL WITH AN APPROVED EPOXY ANCHORAGE SYSTEM. MINIMUM EMBEDMENT DEPTH IS 5". ANCHORAGE SYSTEM CHOSEN MUST BE ABLE TO ACHIEVE AN ULTIMATE TENSILE RESISTANCE OF 3.5 KIPS PER BOLT. THE CONTRACTOR MUST PROVIDE EVIDENCE THAT THIS CAN BE ACHIEVED. EVIDENCE OF ADEQUATE TENSILE RESISTANCE CAN BE BASED ON THE MANUFACTURER'S PUBLISHED VALUES OF ULTIMATE TENSILE STRENGTH (ANCHOR SPACING AND EDGE DISTANCE MUST BE ACCOUNTED FOR). ANCHOR INSTALLATION, INCLUDING HOLE SIZE, DRILLING, AND CLEAN–OUT, MUST BE IN ACCORDANCE WITH THE MANUFACTURER'S INSTRUCTIONS.
8. END POSTS AND BRACING SHALL BE AT 500 FT. MAXIMUM INTERVALS
9. GROUND WIRE PLACED IN 1" DIA. PVC CONDUIT AT PIERS 3 AND 7 AT LOCATIONS SHOWN ON PIER DETAILS.
10. GROUND WIRE PIGTAIL PLACED WITHIN 6" OF EACH FENCE POST ANCHORAGE. CONTRACTOR SHALL COORDINATE LOCATIONS WITH FENCE SUB CONTRACTOR.
11. GROUND WIRE PIGTAIL CONNECTION TO EXPANSION JOINT DEVICE AND EXPANSION JOINT COVER PLATES (NOT SHOWN).

NO.	DATE	BY	CHECK	DESIGN	REVISION / SUBMITTAL

DESIGNED BY: HLR | CHECKED BY: EJT
DRAWN BY: LMT | CHECKED BY: EJT

AECOM Kimley»Horn

90% SUBMISSION - 01/22/16

METROPOLITAN COUNCIL

SOUTHWEST Green Line LRT Extension

CIVIL - VOLUME 4G
LRT OVER BNSF
BRIDGE R0697
WIRE FENCE DESIGN SPECIAL

DISCIPLINE: STRUCTURES
SHEET NAME: CBRR0697-BRG-RAL-003

SHEET 89 OF 118

Jan, 18 2016 01:47 pm V:\3400_ADC\CAD\SEGMENT E4\PLAN SHEETS\STRUCTURES\R0697\CBRR0697-BRG-RAL-003.dwg By: lisa.thompson

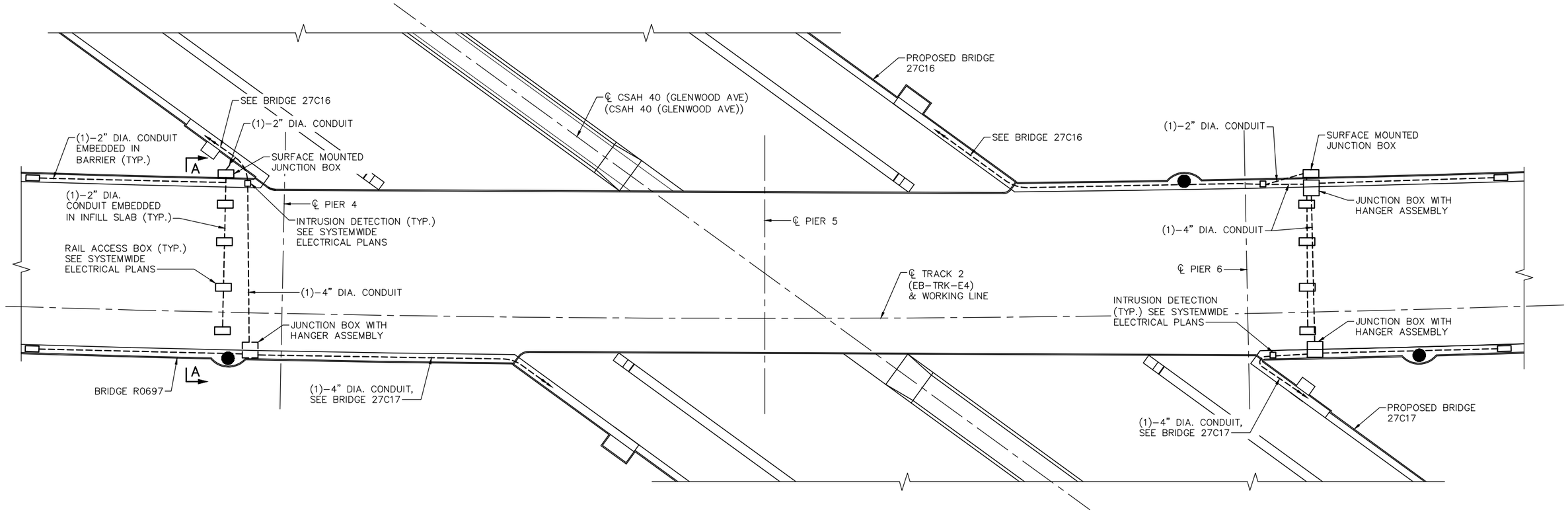

PLAN

NOTES:

SEE SHEET 92 FOR SECTION A–A.

NO.	DATE	BY	CHECK	DESIGN	REVISION / SUBMITTAL

DESIGNED BY: KAE | CHECKED BY: EJT
DRAWN BY: LMT | CHECKED BY: EJT

AECOM Kimley»Horn

90% SUBMISSION - 01/22/16

METROPOLITAN COUNCIL

SOUTHWEST Green Line LRT Extension

CIVIL - VOLUME 4G
LRT OVER BNSF
BRIDGE R0697
CONDUIT SYSTEM 1

DISCIPLINE: STRUCTURES

SHEET NAME: CBRR0697-BRG-SYS-001-1

SHEET 90 OF 118

Jan, 18 2016 01:48 pm V:\3400_ADC\CAD\SEGMENT E4\PLAN SHEETS\STRUCTURES\R0697\CBRR0697-BRG-SYS-001.dwg By: lisa.thompson

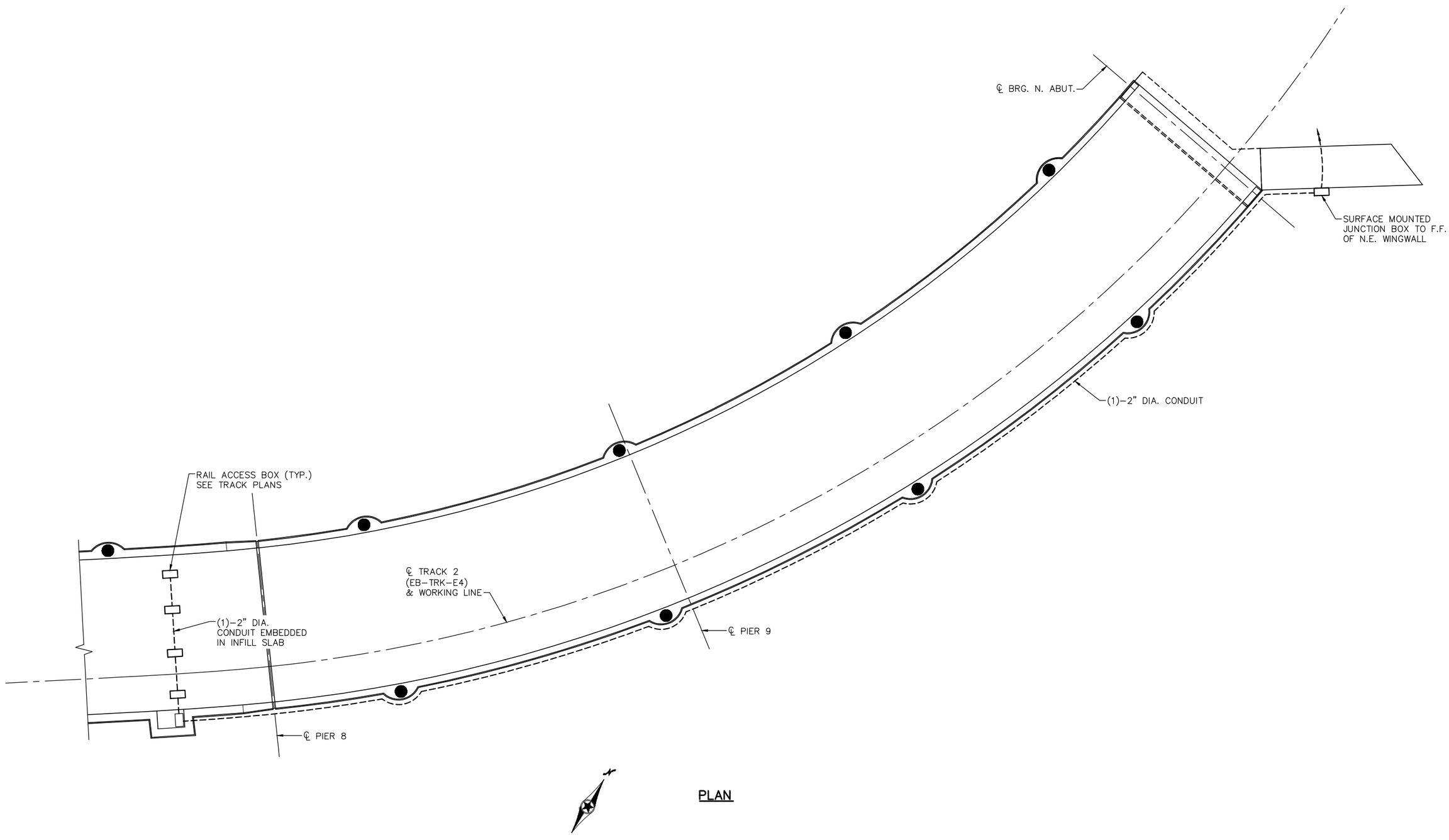

PLAN

NO.	DATE	BY	CHECK	DESIGN	REVISION / SUBMITTAL

DESIGNED BY: KAE CHECKED BY: EJT
DRAWN BY: LMT CHECKED BY: EJT

AECOM Kimley»Horn

90% SUBMISSION - 01/22/16

METROPOLITAN COUNCIL

SOUTHWEST Green Line LRT Extension

CIVIL - VOLUME 4G
LRT OVER BNSF
BRIDGE R0697
CONDUIT SYSTEM 2

DISCIPLINE: STRUCTURES

SHEET NAME: CBRR0697-BRG-SYS-001-2

SHEET 91 OF 118

Jan, 18 2016 01:48 pm V:\3400_ADC\CAD\SEGMENT E4\PLAN SHEETS\STRUCTURES\R0697\CBRR0697-BRG-SYS-001.dwg By: lisa.thompson

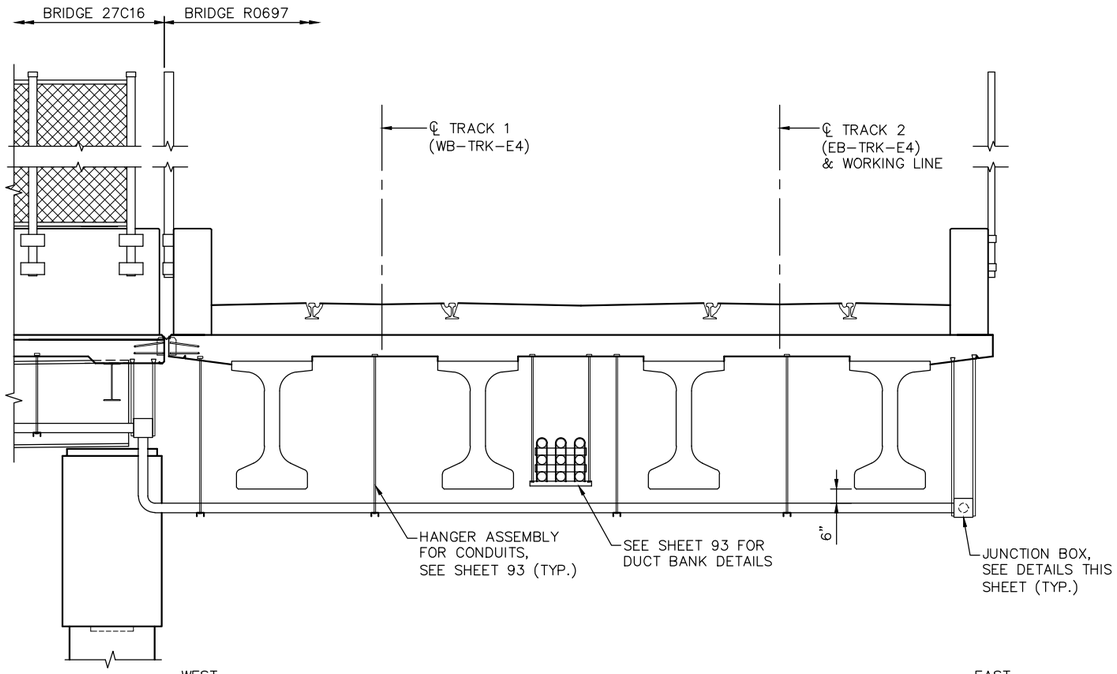

SECTION A–A

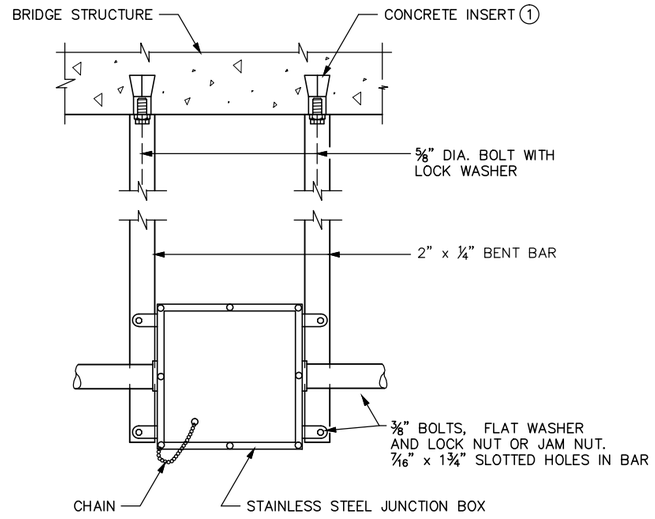

JUNCTION BOX DETAILS

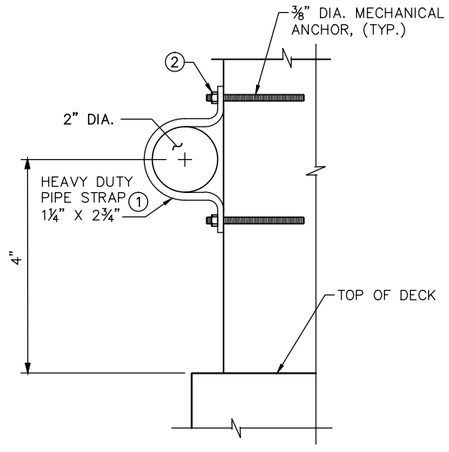

DETAIL "A"
(4" DIA. SIMILAR)

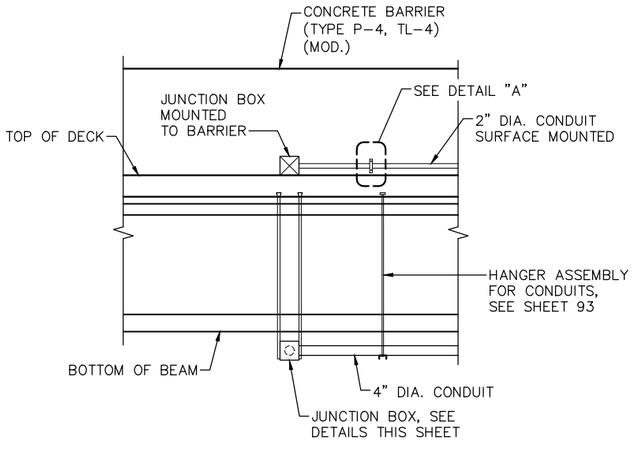

OUTSIDE RAILING ELEVATION

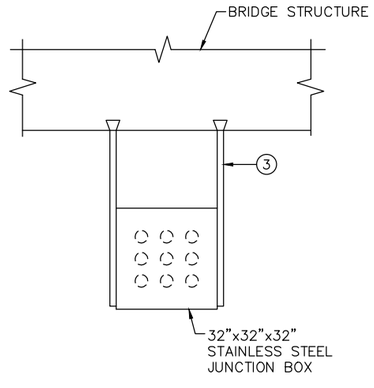

DUCT BANK JUNCTION BOX DETAILS

NOTES:

ALL CONDUIT, JUNCTION BOXES, AND SUPPORTING ELEMENTS SHALL BE PAINTED TO MATCH ADJACENT CONCRETE STRUCTURE.

(1) SPACE PIPE STRAPS OR INSERTS AT 10'–0" MAXIMUM CENTERS.

(2) DOUBLE NUTS OR JAM NUTS OR LOCK NUT.

(3) PROVIDE HANGING SYSTEM FOR STAINLESS STEEL JUNCTION BOX PER MANUFACTURER'S RECOMMENDATIONS.

NO.	DATE	BY	CHECK	DESIGN	REVISION / SUBMITTAL

DESIGNED BY: KAE | CHECKED BY: EJT
DRAWN BY: LMT | CHECKED BY: EJT

AECOM Kimley»Horn

90% SUBMISSION - 01/22/16

METROPOLITAN COUNCIL

SOUTHWEST Green Line LRT Extension

CIVIL - VOLUME 4G
LRT OVER BNSF
BRIDGE R0697
CONDUIT SYSTEM 3

DISCIPLINE: STRUCTURES

SHEET NAME: CBRR0697-BRG-SYS-001-3

SHEET 92 OF 118

Jan, 18 2016 01:48 pm V:\3400_ADC\CAD\SEGMENT E4\PLAN SHEETS\STRUCTURES\R0697\CBRR0697-BRG-SYS-001.dwg By: lisa.thompson

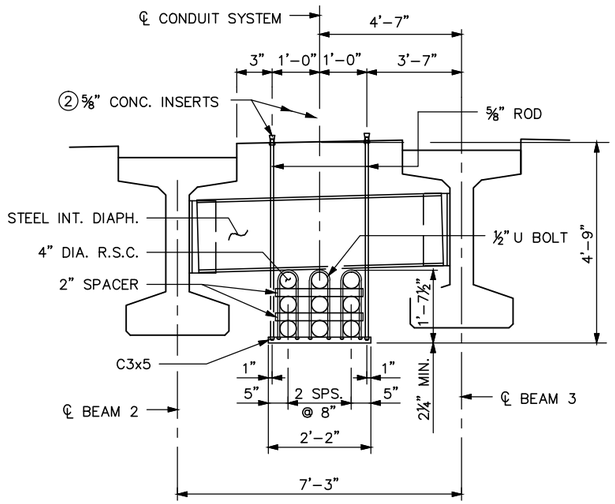

UNIT 1 TRANSVERSE SECTION

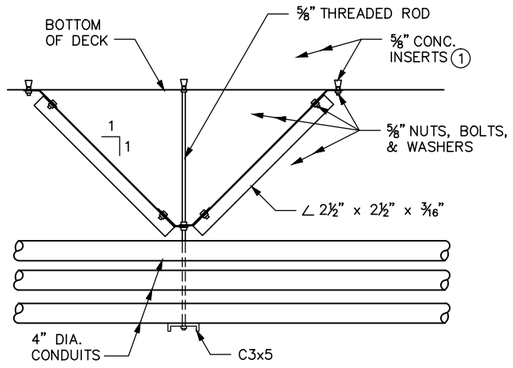

CENTERING DEVICE DETAIL – SIDE VIEW

(LOCATED ONLY ON A HANGER ADJACENT TO PIER)

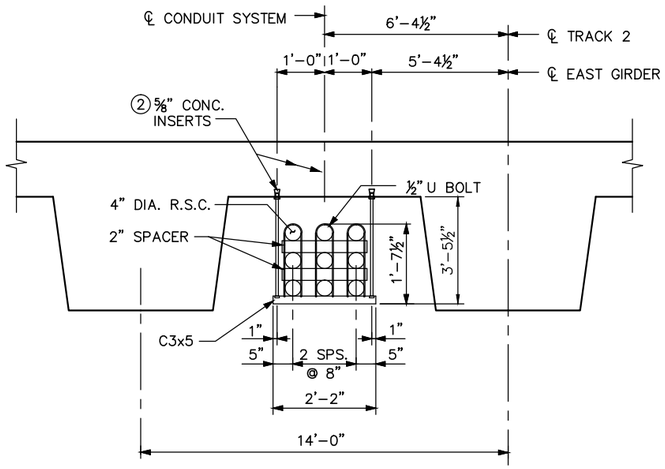

UNIT 2 TRANSVERSE SECTION

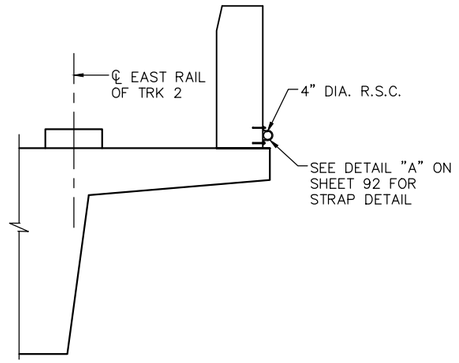

UNIT 2 FRICTION MODIFIER POWER CONDUIT DETAIL

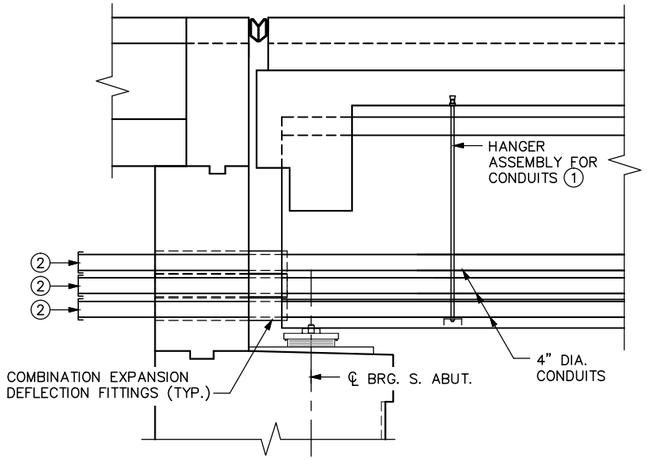

LONGITUDINAL SECTION @ S. ABUT.

(FOR SYSTEMWIDE ELECTRICAL CONDUIT SYSTEM)

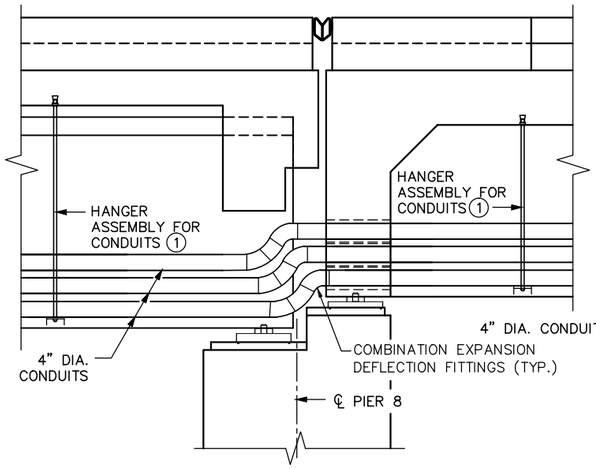

LONGITUDINAL SECTION @ PIER 8

(FOR SYSTEMWIDE ELECTRICAL CONDUIT SYSTEM)

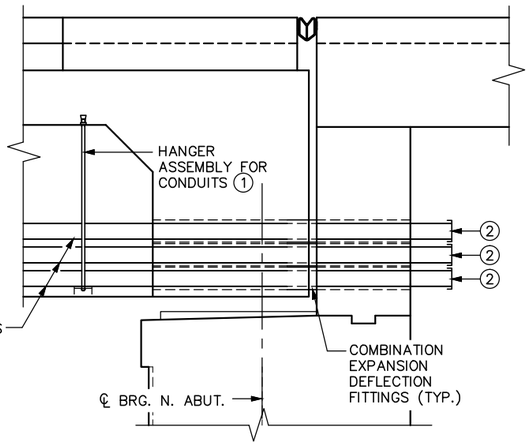

LONGITUDINAL SECTION @ N. ABUT.

(FOR SYSTEMWIDE ELECTRICAL CONDUIT SYSTEM)

NOTES:

RODS, EYE BOLTS AND PIPE CLAMPS SHALL COMPLY WITH MnDOT SPEC. 3313, TYPE I.

TURNBUCKLES AND EYE BOLTS SHALL COMPLY WITH A.S.T.M. A235 CLASS A MINIMUM REQUIREMENTS.

FLAT BARS AND ANCHORAGES SHALL COMPLY WITH SPEC. 3306.

CONCRETE INSERTS SHALL BE APPROVED TYPE MALLEABLE IRON. MATERIAL AS PER SPEC. 3324, GRADE 35018. TAP AFTER GALVANIZING.

GALVANIZE BOLTS, NUTS, WASHERS, TURNBUCKLES, RODS, EYE BOLTS, AND INSERTS AS PER SPEC. 3392. GALVANIZE OTHER MATERIAL AS PER SPEC. 3394 AFTER FABRICATION.

PIPE SLEEVES SHALL COMPLY WITH SPEC. 3362.

PROVIDE INSULATED SLEEVE AT ALL HANGERS AND SPACERS.

ALL CONDUIT, JUNCTION BOXES, AND SUPPORTING ELEMENTS SHALL BE PAINTED TO MATCH ADJACENT CONCRETE STRUCTURE.

① SPACE INSERTS AT 10'–0" MAXIMUM CENTERS.

② CAP ENDS.

③ DOUBLE NUTS OR JAM NUTS OR LOCK NUT.

NO.	DATE	BY	CHECK	DESIGN	REVISION / SUBMITTAL

DESIGNED BY: KAE CHECKED BY: EJT

DRAWN BY: LMT CHECKED BY: EJT

AECOM Kimley»Horn

90% SUBMISSION - 01/22/16

METROPOLITAN COUNCIL

SOUTHWEST Green Line LRT Extension

CIVIL - VOLUME 4G
LRT OVER BNSF
BRIDGE R0697
CONDUIT SYSTEM 4

DISCIPLINE: STRUCTURES

SHEET NAME: CBRR0697-BRG-SYS-002

SHEET 93 OF 118

Jan, 18 2016 01:48 pm V:\3400_ADC\CAD\SEGMENT E4\PLAN SHEETS\STRUCTURES\R0697\CBRR0697-BRG-SYS-002.dwg By: lisa.thompson

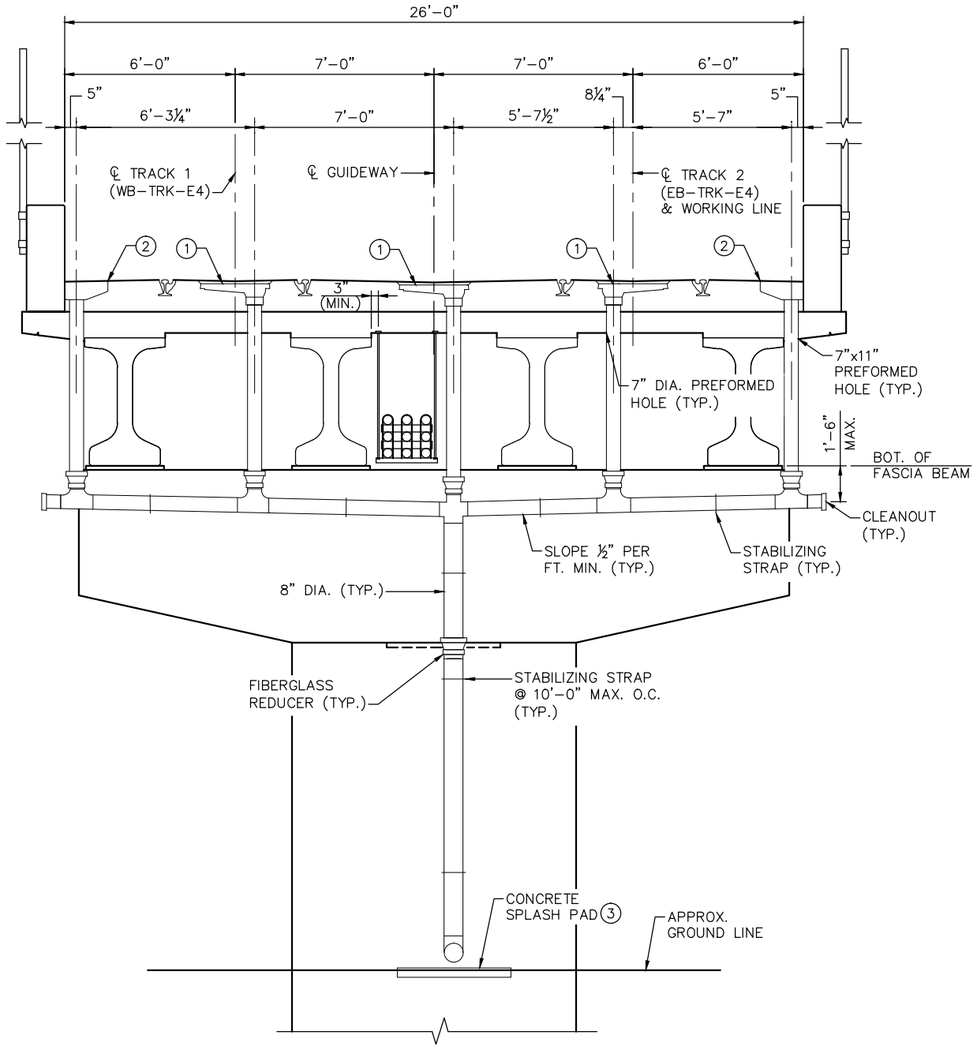

DRAIN AT PIERS
(NORTH FACE OF PIER 2 SHOWN)

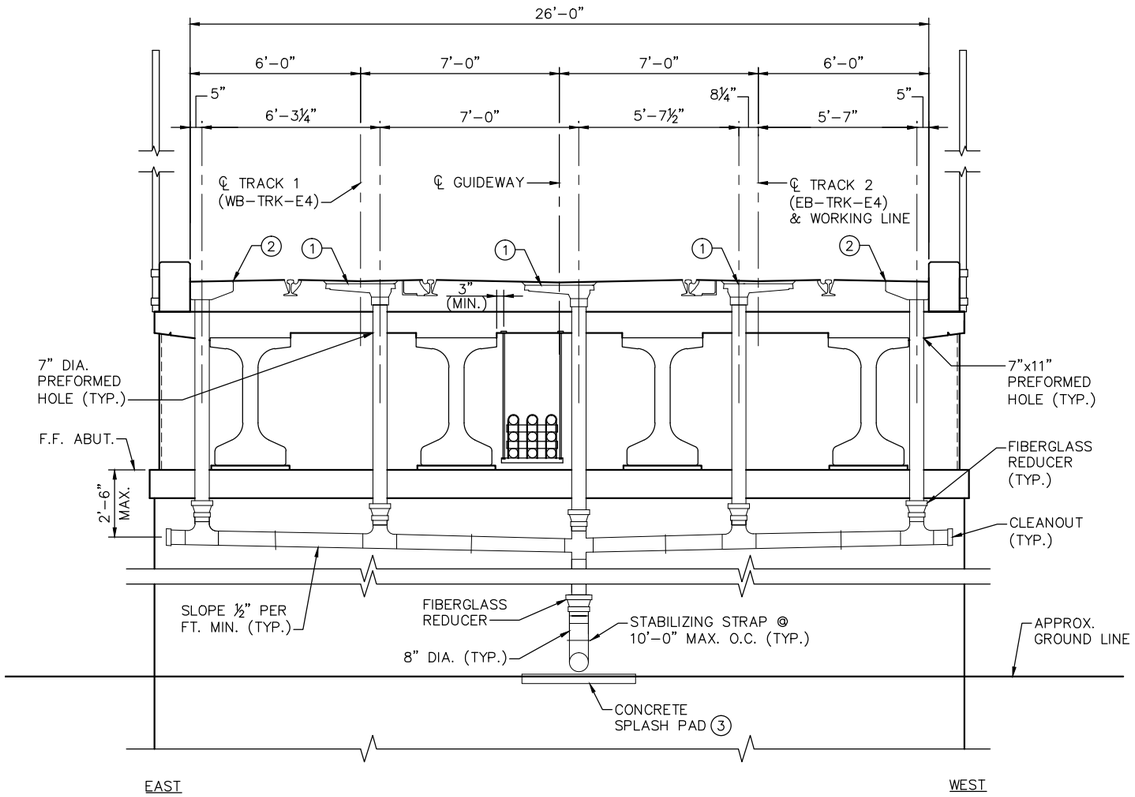

DRAIN AT SOUTH ABUTMENT

NOTES:

ALL DRAINAGE PIPES AND FITTINGS SHALL BE PIGMENTED FIBERGLASS REINFORCED THERMOSETTING RESIN PIPE, SEE SPECIAL PROVISIONS. PIGMENT OF EXPOSED PIPING SHALL MATCH ADJACENT CONCRETE STRUCTURE.

(1) NEENAH TYPE R-3956 OR APPROVED EQUAL DRAIN INLET. SEE SHEET 95 FOR DETAILS.

(2) MNDOT STANDARD B701 DRAIN INLET. SEE SHEET 104 FOR DETAILS.

(3) SEE CIVIL PLANS FOR DETAILS OF SPLASH PAD.

NO.	DATE	BY	CHECK	DESIGN	REVISION / SUBMITTAL

DESIGNED BY: KAE | CHECKED BY: EJT
DRAWN BY: LMT | CHECKED BY: EJT

AECOM Kimley»Horn

90% SUBMISSION - 01/22/16

METROPOLITAN COUNCIL

SOUTHWEST Green Line LRT Extension

CIVIL - VOLUME 4G
LRT OVER BNSF
BRIDGE R0697
DRAINAGE SYSTEM DETAILS 1

DISCIPLINE: STRUCTURES

SHEET NAME: CBRR0697-BRG-DRN-001-1

SHEET 94 OF 118

Jan, 18 2016 01:49 pm V:\3400_ADC\CAD\SEGMENT E4\PLAN SHEETS\STRUCTURES\R0697\CBRR0697-BRG-DRN-001.dwg By: lisa.thompson

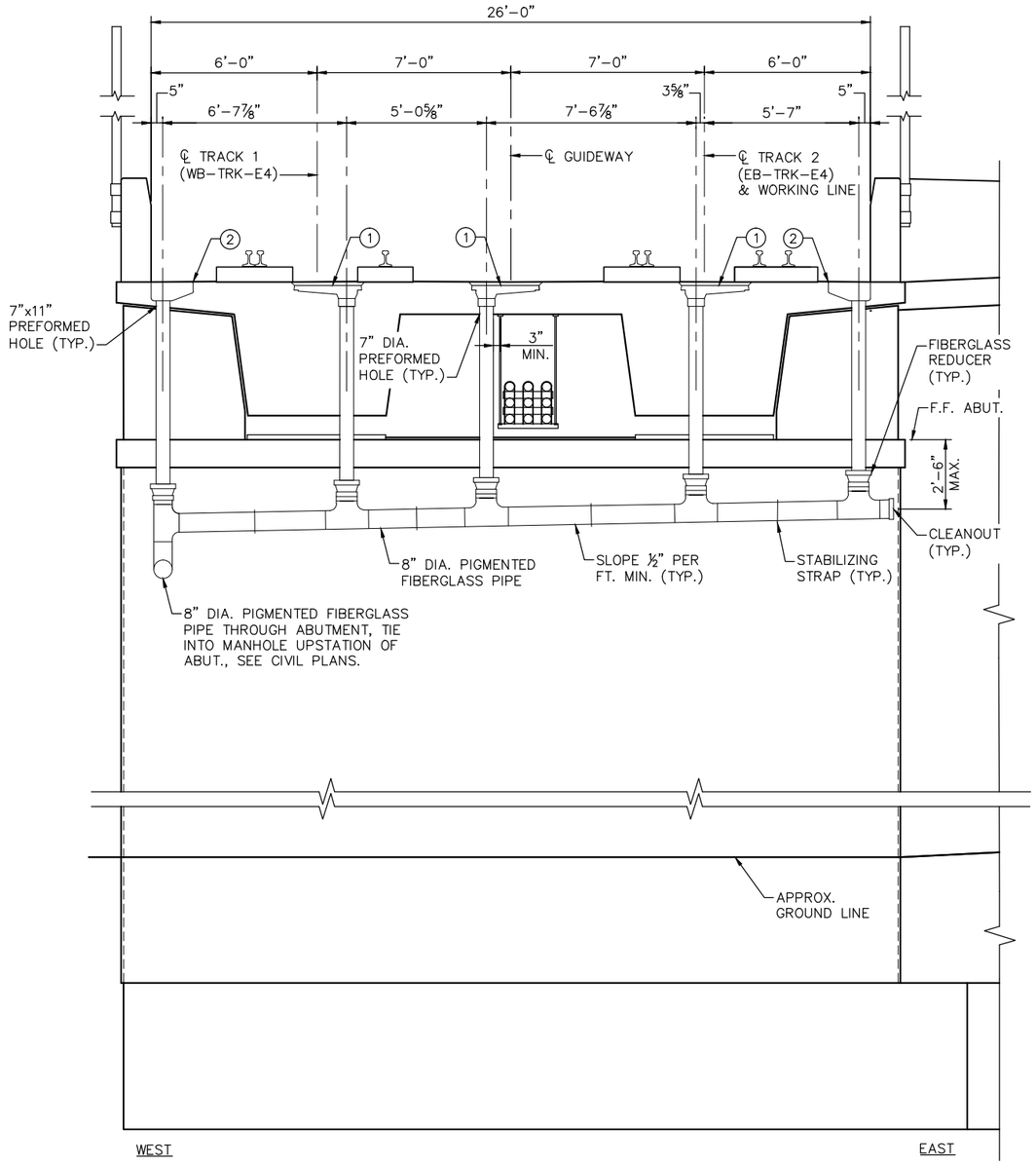

DRAIN AT NORTH ABUTMENT

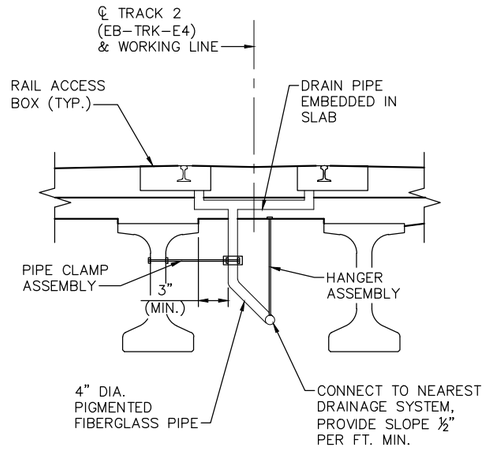

RAIL ACCESS BOX DRAINAGE
(TRACK 2 SHOWN, TRACK 1 SIMILAR)

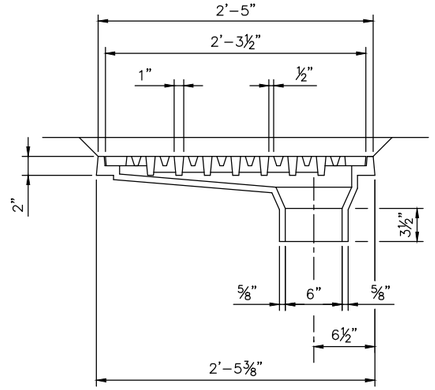

ELEVATION

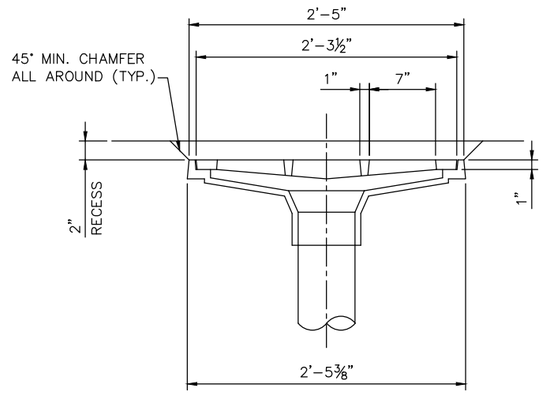

SECTION

DRAINAGE INLET DETAILS

NOTES:

ALL DRAINAGE PIPES AND FITTINGS SHALL BE PIGMENTED FIBERGLASS REINFORCED THERMOSETTING RESIN PIPE, SEE SPECIAL PROVISIONS. PIGMENT OF EXPOSED PIPING SHALL MATCH ADJACENT CONCRETE STRUCTURE.

(1) NEENAH TYPE R-3956 OR APPROVED EQUAL DRAIN INLET.

(2) MNDOT STANDARD B701 DRAIN INLET. SEE SHEET 104 FOR DETAILS.

(3) SEE CIVIL PLANS FOR DETAILS OF SPLASH PAD.

NO.	DATE	BY	CHECK	DESIGN	REVISION / SUBMITTAL

DESIGNED BY: KAE | CHECKED BY: EJT
DRAWN BY: LMT | CHECKED BY: EJT

AECOM Kimley»Horn

90% SUBMISSION - 01/22/16

METROPOLITAN COUNCIL

SOUTHWEST Green Line LRT Extension

CIVIL - VOLUME 4G
LRT OVER BNSF
BRIDGE R0697
DRAINAGE SYSTEM DETAILS 2

DISCIPLINE: STRUCTURES
SHEET NAME: CBRR0697-BRG-DRN-001-2

SHEET 95 OF 118

Jan, 18 2016 01:49 pm V:\3400_ADC\CAD\SEGMENT E4\PLAN SHEETS\STRUCTURES\R0697\CBRR0697-BRG-DRN-001.dwg By: lisa.thompson

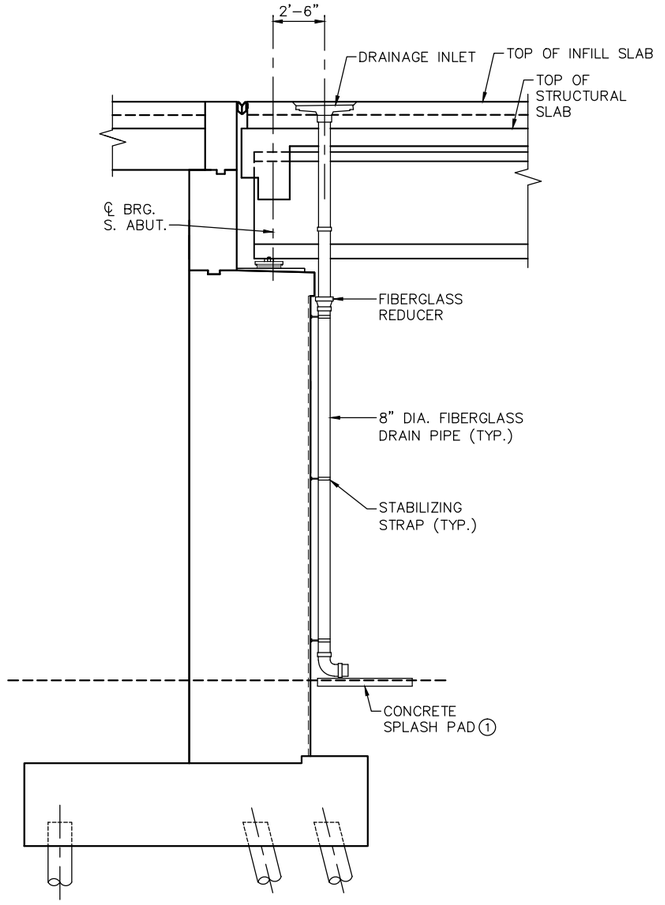

SECTION THRU SOUTH ABUTMENT

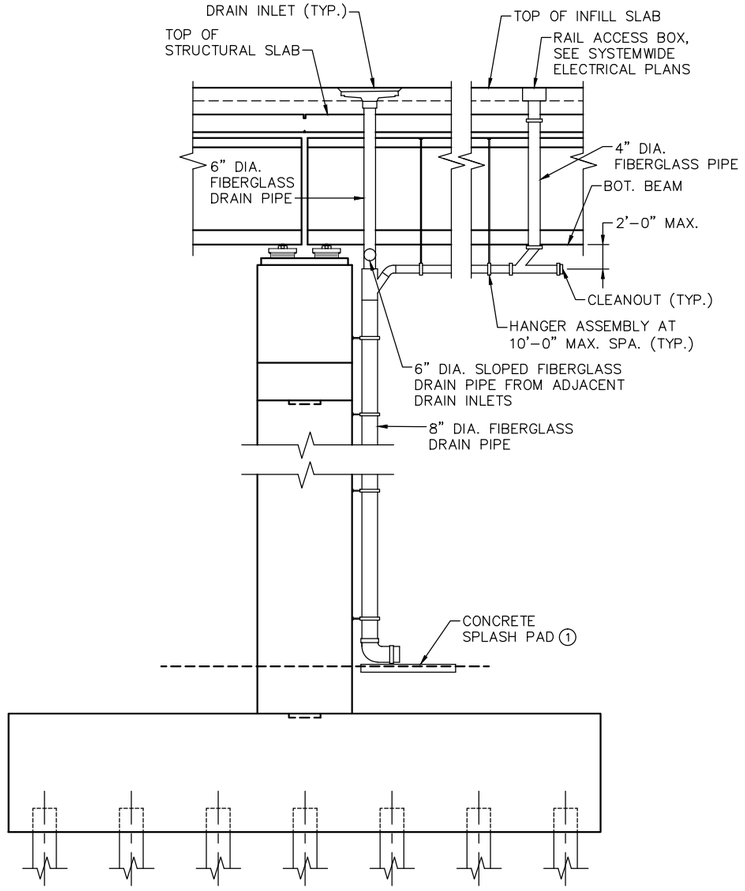

RAIL ACCESS BOX DRAIN PIPE ELEVATION
(PIER 4 SHOWN)

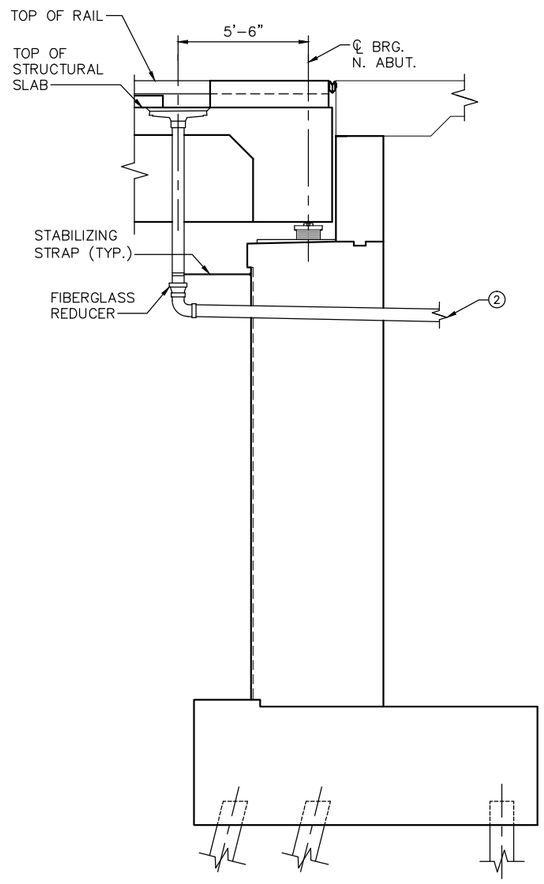

SECTION THRU NORTH ABUTMENT

NOTES:

ALL DRAINAGE PIPES AND FITTINGS SHALL BE PIGMENTED FIBERGLASS REINFORCED THERMOSETTING RESIN PIPE, SEE SPECIAL PROVISIONS. PIGMENT OF EXPOSED PIPING SHALL MATCH ADJACENT CONCRETE STRUCTURE.

(1) SEE CIVIL PLANS FOR DETAILS OF SPLASH PAD.

(2) TIE PIPE INTO MANHOLE UPSTATION OF NORTH ABUT., SEE CIVIL PLANS

NO.	DATE	BY	CHECK	DESIGN	REVISION / SUBMITTAL

DESIGNED BY: KAE | CHECKED BY: EJT
DRAWN BY: LMT | CHECKED BY: EJT

AECOM Kimley»Horn

90% SUBMISSION - 01/22/16

METROPOLITAN COUNCIL

SOUTHWEST Green Line LRT Extension

CIVIL - VOLUME 4G
LRT OVER BNSF
BRIDGE R0697
DRAINAGE SYSTEM DETAILS 3

DISCIPLINE: STRUCTURES

SHEET NAME: CBRR0697-BRG-DRN-001-3

SHEET 96 OF 118

Jan. 18 2016 01:49 pm V:\3400_ADC\CAD\SEGMENT E4\PLAN SHEETS\STRUCTURES\R0697\CBRR0697-BRG-DRN-001.dwg By: lisa.thompson

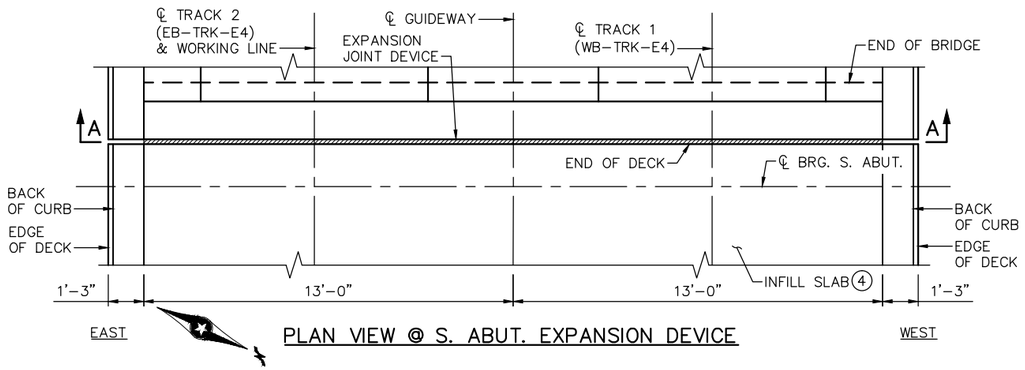

PLAN VIEW @ S. ABUT. EXPANSION DEVICE

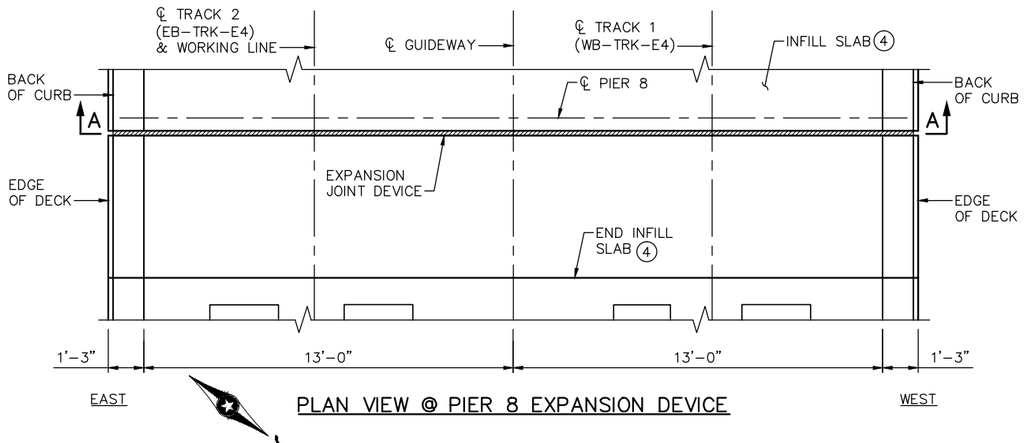

PLAN VIEW @ PIER 8 EXPANSION DEVICE

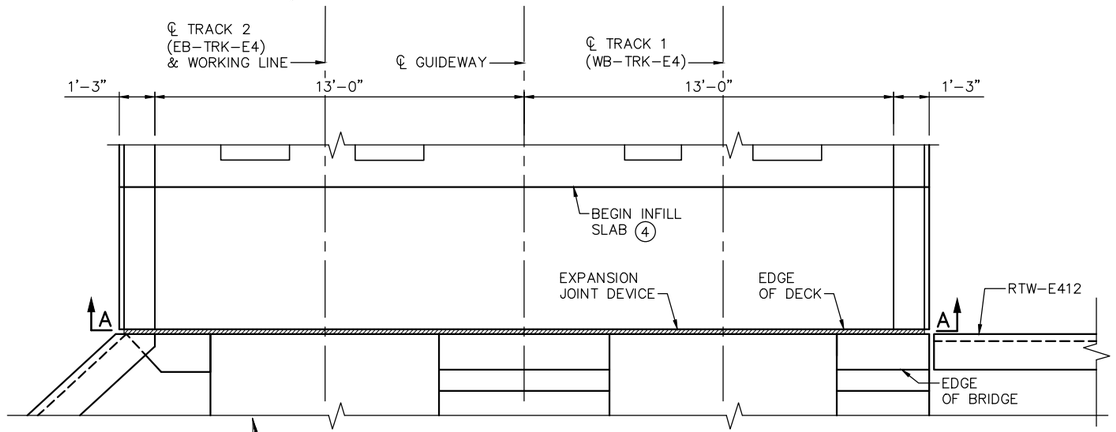

PLAN VIEW @ N. ABUT. EXPANSION DEVICE

EXPANSION JOINT ELEVATIONS				
SUBSTRUCTURE		SOUTH ABUTMENT	PIER 8	NORTH ABUTMENT
EAST GUTTERLINE		842.40	852.39	851.84
TRACK 2	EAST RAIL	842.47	852.46	851.91
	CENTERLINE	842.42	852.41	851.86
	WEST RAIL	842.47	852.46	851.91
GUIDEWAY		842.38	852.37	851.82
TRACK 1	EAST RAIL	842.48	852.55	852.09
	CENTERLINE	842.43	852.50	852.04
	WEST RAIL	842.48	852.55	852.09
WEST GUTTERLINE		842.41	852.48	852.02

EXPANSION JOINT OPENING DIMENSIONS						
	SOUTH ABUTMENT		PIER 8		NORTH ABUTMENT	
SLAB	STRUCTURAL	INFILL	STRUCTURAL	INFILL	STRUCTURAL	INFILL
45° F	2 5/8"	4 5/8"	2 3/4"	4 3/4"	1 7/8"	3 7/8"
90° F	1 1/2"	3 1/2"	1 1/2"	3 1/2"	1 1/2"	3 1/2"

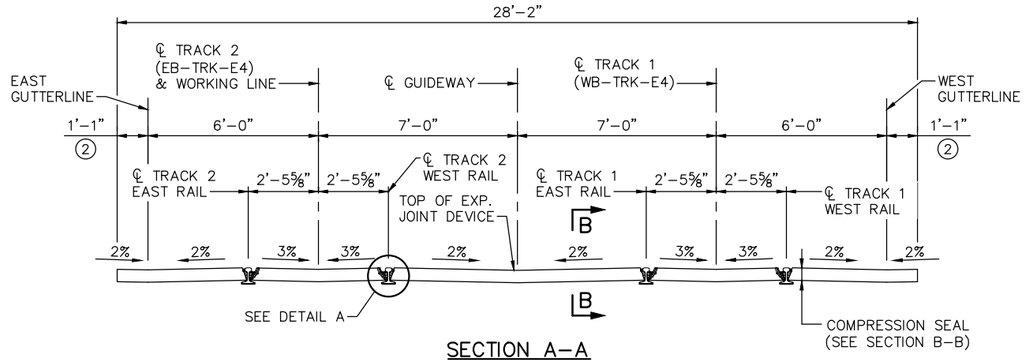

SECTION A–A

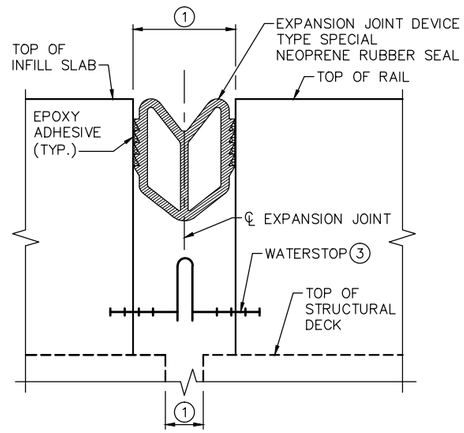

SECTION B–B

(PIER 8 SHOWN)
(SEE SPECIAL PROVISIONS)

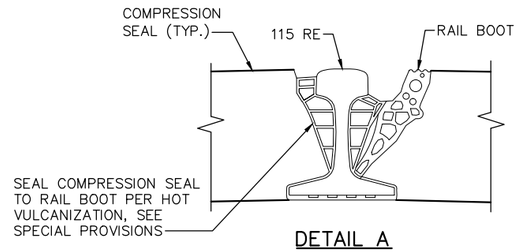

DETAIL A

NOTES:

1. SEE EXPANSION JOINT OPENING TABLE.
2. SLOPE EXPANSION JOINT TOWARDS GUTTERLINE.
3. INSTALL EXPANSION WATERSTOP BELOW COMPRESSION SEAL EXPANSION JOINTS AT THE SOUTH ABUTMENT, PIER 8, AND NORTH ABUTMENT. WATERSTOP SHALL ALLOW A MINIMUM OF 4¾" OF ANTICIPATED MOVEMENT. INSTALL WATERSTOP WITHIN INFILL SLAB ⅛" PER FOOT TOWARDS EAST SIDE OF THE BRIDGE.
4. SEE SUPERSTRUCTURE SHEETS 78–80 FOR INFILL SLAB LIMITS.

NO.	DATE	BY	CHECK	DESIGN	REVISION / SUBMITTAL

DESIGNED BY: JBW | CHECKED BY: EJT
DRAWN BY: LMT | CHECKED BY: EJT

AECOM Kimley»Horn

90% SUBMISSION - 01/22/16

METROPOLITAN COUNCIL

SOUTHWEST Green Line LRT Extension

CIVIL - VOLUME 4G
LRT OVER BNSF
BRIDGE R0697
WATERPROOF EXPANSION DEVICE 1

DISCIPLINE: STRUCTURES

SHEET NAME: CBRR0697-BRG-EXP-001-1

SHEET 97 OF 118

Jan, 18 2016 01:49 pm V:\3400_ADC\CAD\SEGMENT E4\PLAN SHEETS\STRUCTURES\R0697\CBRR0697-BRG-EXP-001.dwg By: lisa.thompson

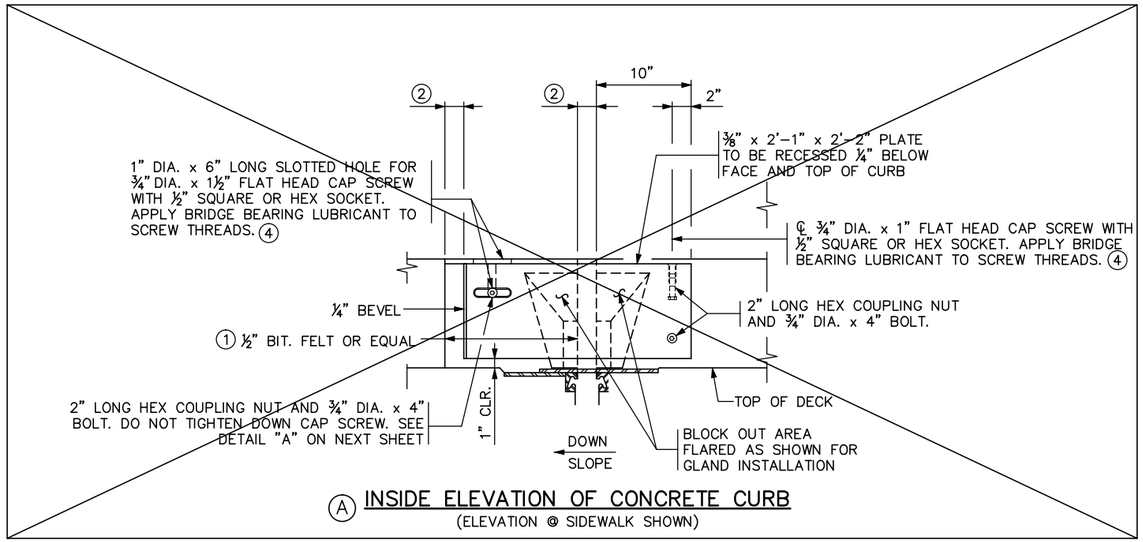

Ⓐ INSIDE ELEVATION OF CONCRETE CURB
(ELEVATION @ SIDEWALK SHOWN)

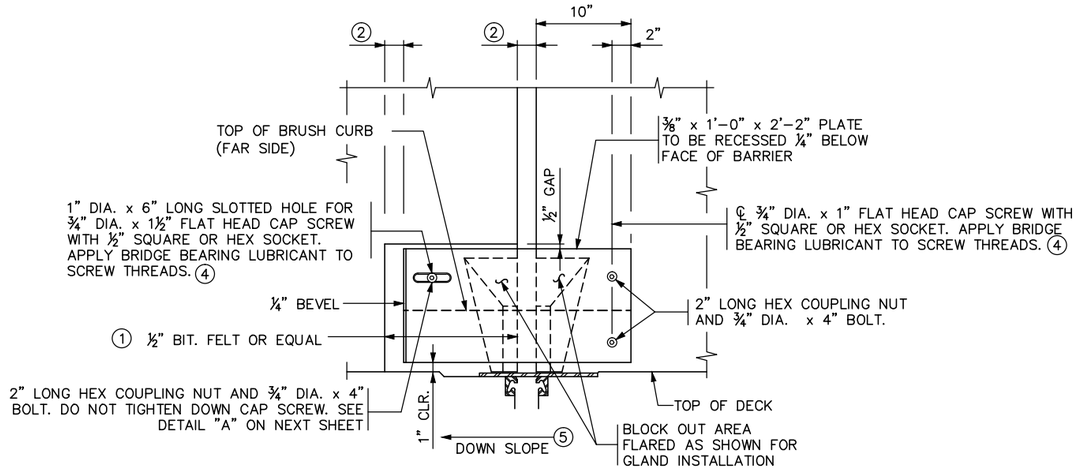

Ⓐ FRONT FACE ELEVATION OF CONCRETE BARRIER

NOTE:
TRANSVERSE DECK REINFORCEMENT MAY BE SHIFTED THE MINIMUM DISTANCE REQUIRED FOR EXPANSION DEVICE PLACEMENT

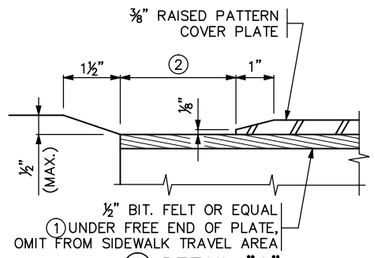

Ⓐ DETAIL "A"

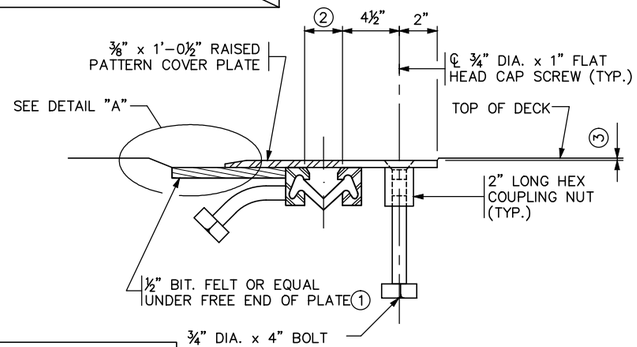

SECTION D-D

GENERAL NOTES

Ⓐ SEE SHEET 99 FOR ADDITIONAL DETAILS AND NOTES.

¾" DIA. X 1" FLAT HEAD CAP SCREW WITH ½" SQUARE OR HEX SOCKET PER SPEC 3391. CAP SCREWS SHALL BE COUNTERSUNK 1/16" BELOW TOP OF PLATE. APPLY BRIDGE BEARING LUBRICANT TO SCREW THREADS. ④

① USE LARGEST SINGLE PIECE POSSIBLE. USE OF SMALL PIECES OR SCRAPS SECURED TOGETHER IS PROHIBITED.

Ⓐ ② 2" @ 90° F, 2¾16" @ 45° F @ EAST PIER.
2" @ 90° F, 2¾16" @ 45° F @ WEST PIER

③ ⅛" (¼" MAX.).

④ LUBRICANT PER MnDOT APPROVED/QUALIFIED PRODUCTS LIST: BRIDGE – BRIDGE BEARING LUBRICANT.

Ⓐ ⑤ DOWN SLOPE DIRECTION APPLIES TO ⅜" x 1'-0½" RAISED COVER PLATE

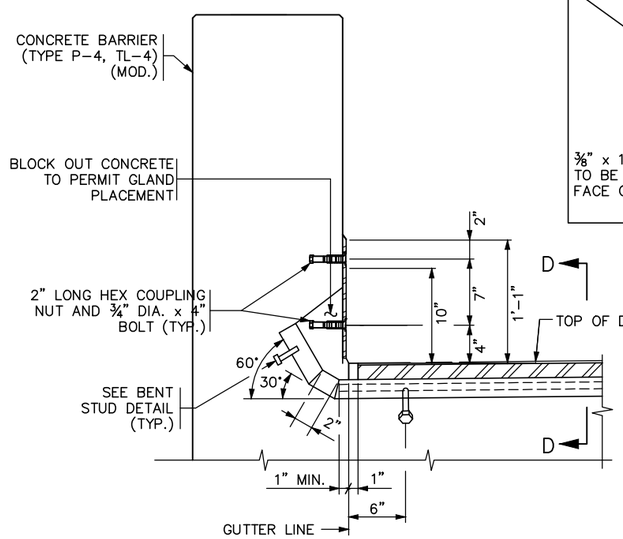

Ⓐ CONCRETE BARRIER

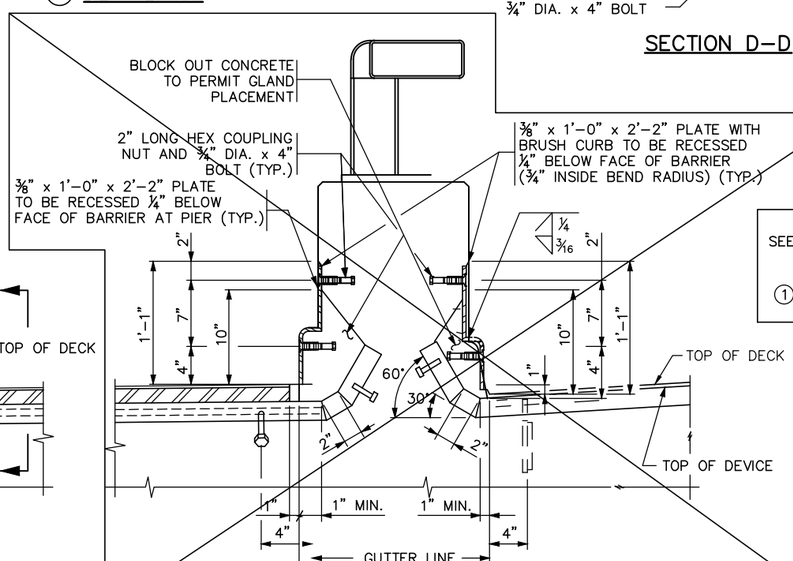

TYPE P-2 PARAPET

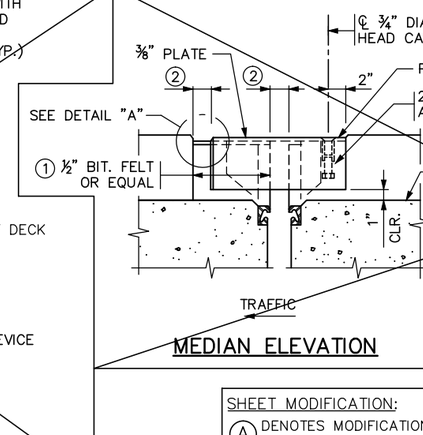

MEDIAN ELEVATION

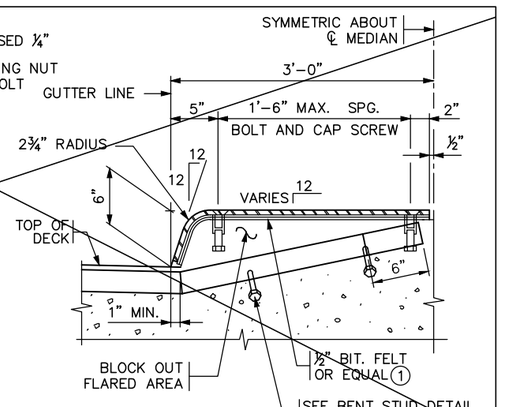

MEDIAN SECTION

SHEET MODIFICATION:
Ⓐ DENOTES MODIFICATION TO STANDARD SHEET

SECTION THROUGH PARAPET AND CURB – INTEGRAL SIDEWALK Ⓐ

(BENT STUDS MAY BE USED ON EAST ABUTMENT EXPANSION JOINT IN SIDEWALK AREA.)
(ALL OTHER LOCATIONS SHALL BE BAR-RODS.)

DRAFT-WORK IN PROCESS

REVISION:

APPROVED: NOVEMBER 6, 2013
Nancy Daubenberger
STATE BRIDGE ENGINEER

CERTIFIED BY _____ 01/22/16
LICENSED PROFESSIONAL ENGINEER — DATE
NAME: **ENGINEER** LIC. NO. #####

TITLE: WATERPROOF EXPANSION DEVICE
Ⓐ ~~(RAISED MEDIAN OR INTEGRAL SIDEWALK WITH CURB)~~

DES: JBW	DR: LMT
CHK: EJT	CHK: EJT

SHEET NO. **98** OF **118** SHEETS

APPROVED:

FIG. 5-397.632 (MOD.)

BRIDGE NO. **R0697**

Jan. 18 2016 01:50 pm V:\3400_ADC\CAD\SEGMENT E4\PLAN SHEETS\STRUCTURES\R0697\CBRR0697-BRG-EXP-002.dwg By: lisa.thompson

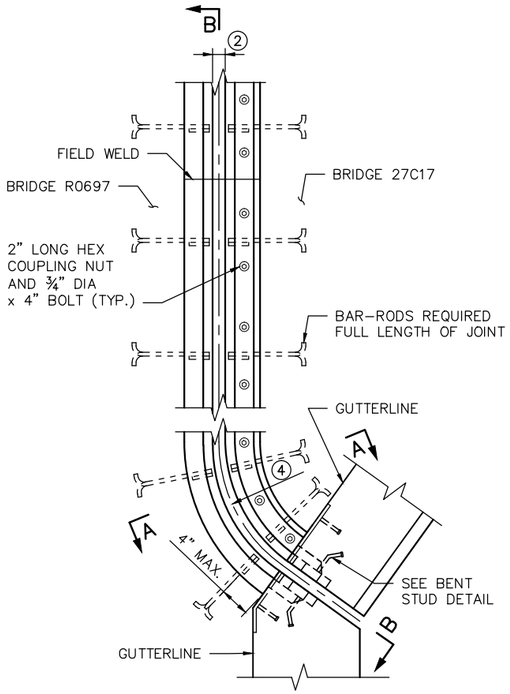

PLAN VIEW @ EXPANSION DEVICE

(SOUTHEAST CORNER SHOWN, NORTHEAST CORNER SIMILAR)

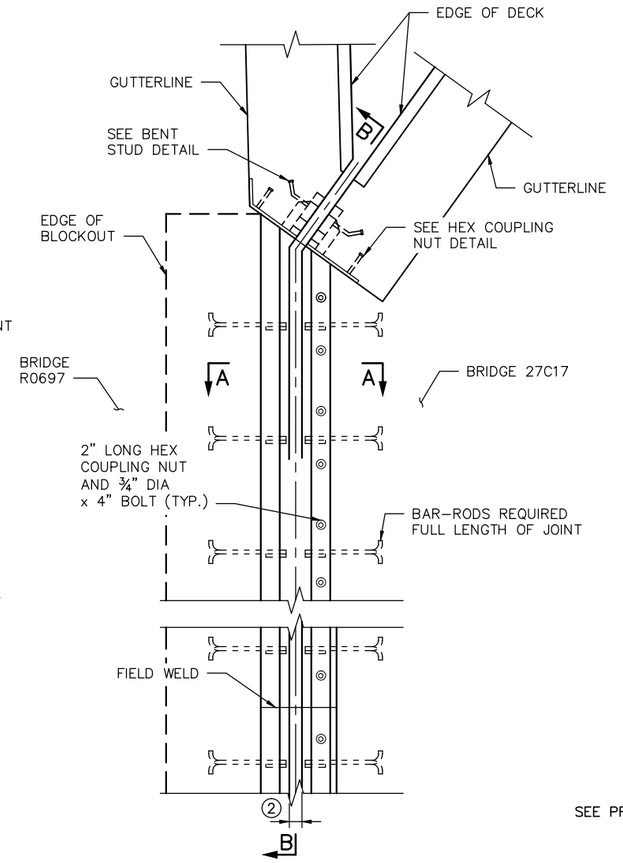

PLAN VIEW @ EXPANSION DEVICE

(NORTHEAST CORNER SHOW, SOUTHWEST CORNER SIMILAR)

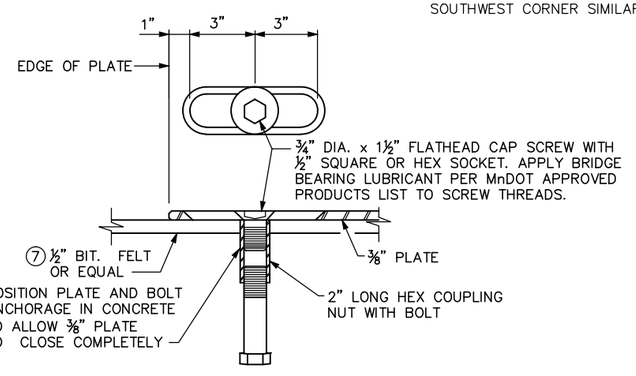

DETAIL "A"

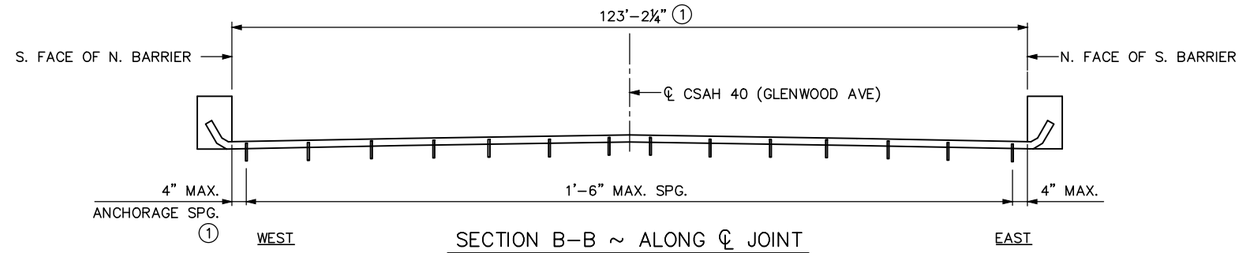

SECTION B-B ~ ALONG ℄ JOINT

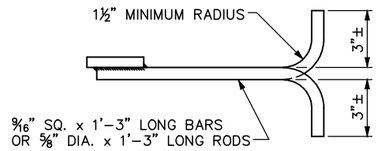

BAR-ROD DETAIL ⑤

(SEE SECTION D-D ON PREVIOUS SHEET FOR COVER PLATE SCREW DETAIL)

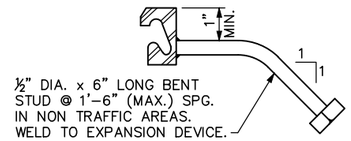

BENT STUD DETAIL

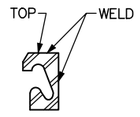

SECTION C-C

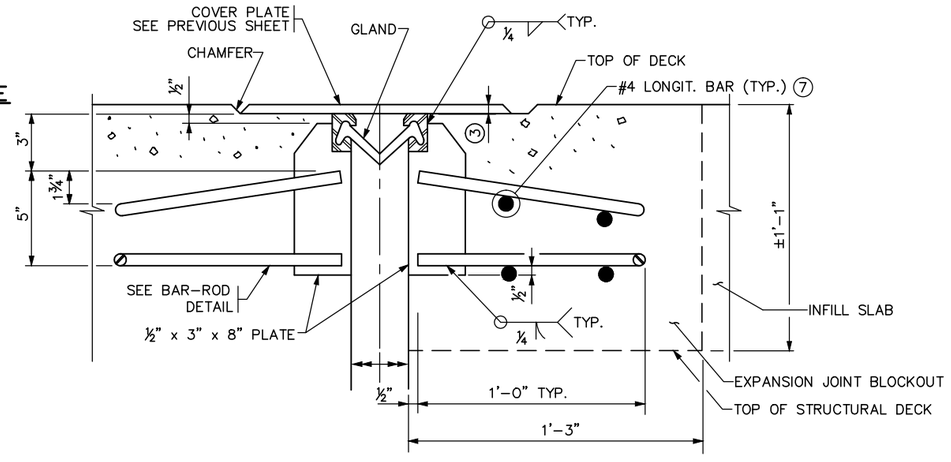

SECTION A-A

(SECTION @ SIDEWALK SHOWN W/COVER PLATE. OMIT COVER PLATE IN ROADWAY) (WEST JOINT SHOWN, EAST JOINT SIMILAR)

⑥ ELEVATIONS		
LOCATION	WEST PIER	EAST PIER
S. FACE OF N. BARRIER	851.39	851.48
CL CSAH 40 (GLENWOOD AVE)	851.10	851.22
N. FACE OF S. BARRIER	850.74	850.85

NOTES:

GALVANIZE STRUCTURAL STEEL AFTER FABRICATION AS PER MnDOT SPEC. 3394. GALVANIZE FASTENERS AS PER MnDOT SPEC. 3392.

JOINTS IN EXTRUSION SHALL BE LOCATED AT BREAKS IN TRANSVERSE PROFILE AND AS OTHERWISE REQUIRED. JOINTS SHALL BE CLOSE FIT AND WELDED. REPAIR AFTER WELDING AS PER MnDOT SPEC. 2471.3.L.

STRUCTURAL STEEL SHALL COMPLY WITH MnDOT SPEC. 3306 OR MnDOT SPEC. 3309.

EXPANSION DEVICE SHALL BE STRAIGHTENED TO A TOLERANCE OF ⅛" IN 10 FT.

¾" DIA. X 1½" FLATHEAD CAP SCREW WITH ½" SQUARE OR HEX SOCKET PER MnDOT SPEC 3391. CAP SCREWS SHALL BE COUNTERSUNK 1/16" BELOW TOP OF PLATE. APPLY BRIDGE BEARING LUBRICANT PER MnDOT APPROVED PRODUCTS LIST TO SCREW THREADS.

① DIMENSIONS ARE ALONG CENTERLINE OF JOINT. SEE SHEET 68 FOR ADDITIONAL DIMENSIONS.

② 2" @ 90° F, 2 3/16" @ 45° F @ EAST PIER.
2" @ 90° F, 2 3/16" @ 45° F @ WEST PIER.

③ ⅛" (¼" MAX.).

④ SEE SHEET 70 FOR RADIUS.

⑤ PLACE BAR-ROD NORMAL TO JOINT.

⑥ ELEVATIONS SHOWN ARE ⅛" BELOW TOP OF SLAB @ ℄ JOINT ELEVATIONS SHOWN ARE ½" BELOW TOP OF SLAB @ ℄ JOINT WITH COVER PLATE.

⑦ SEE SUPERSTRUCTURE SHEETS 78-80 FOR DETAILS

NO.	DATE	BY	CHECK	DESIGN	REVISION / SUBMITTAL

DESIGNED BY: JBW CHECKED BY: EJT
DRAWN BY: LMT CHECKED BY: EJT

AECOM Kimley»Horn

90% SUBMISSION - 01/22/16

METROPOLITAN COUNCIL

SOUTHWEST Green Line LRT Extension

CIVIL - VOLUME 4G
LRT OVER BNSF
BRIDGE R0697
WATERPROOF EXPANSION DEVICE 3

DISCIPLINE: STRUCTURES
SHEET NAME: CBRR0697-BRG-EXP-002-3

SHEET 99 OF 118

Jan. 18 2016 01:50 pm v:\3400_ADC\CAD\SEGMENT E4\PLAN SHEETS\STRUCTURES\R0697\CBRR0697-BRG-EXP-002.dwg By: lisa.thompson

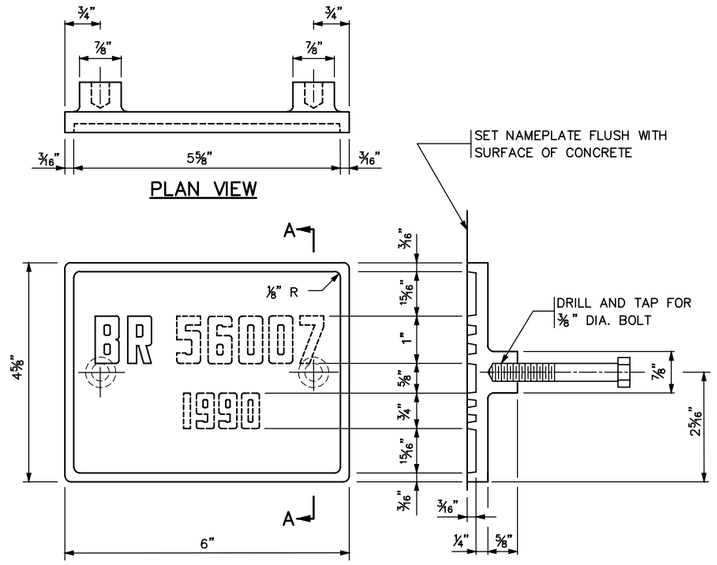

THE DASHED NUMBERS SHOWN ABOVE ARE FOR ILLUSTRATION.
DATA TO BE SHOWN ON NAMEPLATE IS AS FOLLOWS:

BRIDGE R0697

YEAR ①



NUMBERS FOR NAMEPLATE

NOTES:

MATERIAL SHALL COMPLY WITH SPEC. 3327.

LETTERS AND NUMBERS SHALL CONFORM TO THOSE SHOWN.

DRAFT ON LETTERS AND NUMBERS SHALL NOT BE MORE THAN 3" IN 12".

HORIZONTAL SPACING OF LETTERS AND NUMBERS SHALL PRODUCE A BALANCED LAYOUT IN PROPORTION TO SPACING SHOWN.

TOP SURFACE OF LETTERS, NUMBERS AND FRAMES SHALL BE BURNISHED.

FURNISH 2 STEEL BOLTS ⅜ " DIA. x 3" LONG WITH EACH PLATE.

ALL DIMENSIONS FOR ¾" HIGH LETTERS AND NUMBERS SHALL BE IN DIRECT PROPORTION TO THOSE SHOWN FOR THE 1" HIGH LETTERS AND NUMBERS.

① YEAR OF CONSTRUCTION.

APPROVED: NOVEMBER 22, 2002	STATE OF MINNESOTA DEPARTMENT OF TRANSPORTATION	REVISION 09–11–2014	DETAIL NO.
Daniel L Hougan STATE BRIDGE ENGINEER	BRIDGE NAMEPLATE (FOR NEW BRIDGES)		B101

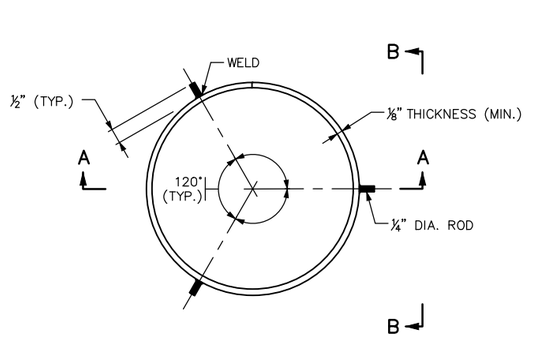

PLAN VIEW – SPLICE BACK–UP RING

PILE NOT SHOWN

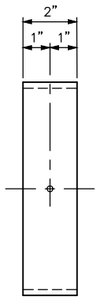

SECTION B–B

PILE NOT SHOWN

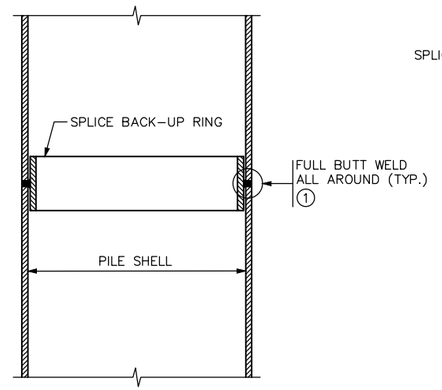

SECTION A–A

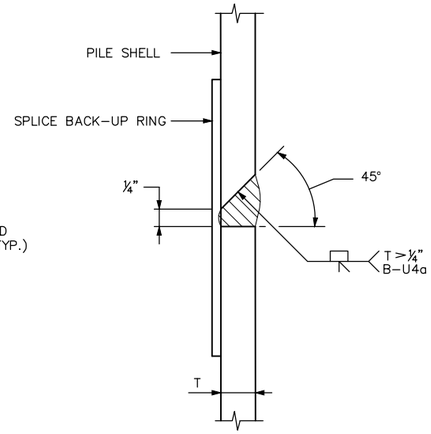

DETAIL "A" ①

NOTES:

APPROVED COMMERCIAL PILE SPLICE BACK–UP RING MAY BE USED IN LIEU OF THE TYPE DETAILED, PROVIDED THAT ¼" ROOT IS MAINTAINED. BACK–UP RING SHALL HAVE A TIGHT FIT.

WELDING ELECTRODES SHALL BE CELLULOSIC TYPE ELECTRODES E–6010 OR E–6011.

ELECTRODES WHICH HAVE BECOME WET, SOILED OR DAMAGED SHALL NOT BE USED.

WELDING SHALL NOT BE DONE WHEN THE AMBIENT TEMPERATURE IS LOWER THAN 0° F. OR WHEN THE PILE IS WET OR EXPOSED TO FALLING RAIN OR SNOW. WHEN THE PILE METAL TEMPERATURE IS BELOW 32° F., THE PILE METAL IN THE AREA OF THE WELD SHALL BE HEATED TO A MINIMUM TEMPERATURE OF 70° F. AND MAINTAINED AT THIS TEMPERATURE DURING WELDING.

① FOR PILE SHELL THICKNESSES GREATER THAN ¼", USE A B–U4a WELD CONFIGURATION. SEE DETAIL "A".

APPROVED: NOVEMBER 22, 2002	STATE OF MINNESOTA DEPARTMENT OF TRANSPORTATION	REVISION: 11–06–2013	DETAIL NO.
Daniel L Hougan STATE BRIDGE ENGINEER	PILE SPLICE (CAST–IN–PLACE CONCRETE PILES)		B201

NO.	DATE	BY	CHECK	DESIGN	REVISION / SUBMITTAL

DESIGNED BY: BAW CHECKED BY: EJT

DRAWN BY: LMT CHECKED BY: EJT

AECOM Kimley»Horn

90% SUBMISSION - 01/22/16

METROPOLITAN COUNCIL

SOUTHWEST Green Line LRT Extension

CIVIL - VOLUME 4G
LRT OVER BNSF
BRIDGE R0697
BRIDGE DETAILS 1

DISCIPLINE: STRUCTURES

SHEET NAME: CBRR0697-BRG-DTL-001-1

SHEET 100 OF 118

Jan. 18 2016 01:50 pm V:\3400_ADC\CAD\SEGMENT E4\PLAN SHEETS\STRUCTURES\R0697\CBRR0697-BRG-DTL-001.dwg By: lisa.thompson

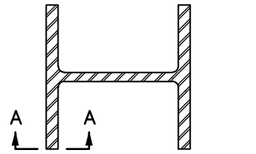

SECTION AT SPLICE

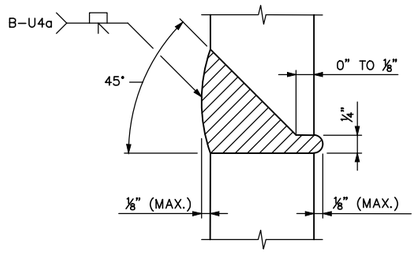

SECTION A-A

100% BUTT WELDED PILE SPLICE

NOTES:

CELLULOSIC TYPE ELECTRODES E-6010 OR E-6011 SHALL BE USED FOR 100% BUTT WELDED SPLICES.

ELECTRODES WHICH HAVE BECOME WET, SOILED OR DAMAGED SHALL NOT BE USED.

WELDING SHALL NOT BE DONE WHEN THE AMBIENT TEMPERATURE IS LOWER THAN 0° F. OR WHEN THE PILE IS WET OR EXPOSED TO FALLING RAIN OR SNOW. WHEN THE PILE METAL TEMPERATURE IS BELOW 32° F., THE PILE METAL IN THE AREA OF THE WELD SHALL BE HEATED TO A MINIMUM TEMPERATURE OF 70° F. AND MAINTAINED AT THIS TEMPERATURE DURING WELDING.

APPROVED: NOVEMBER 22, 2002	STATE OF MINNESOTA DEPARTMENT OF TRANSPORTATION	REVISION: 11-06-2013	DETAIL NO.
Daniel L. Worgan STATE BRIDGE ENGINEER	PILE SPLICE (STEEL H BEARING PILES 10" TO 14")		B202

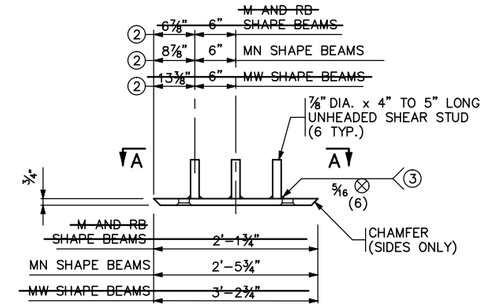

FRONT ELEVATION

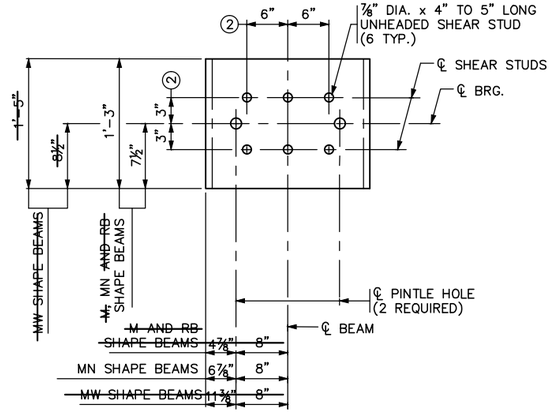

SECTION A-A

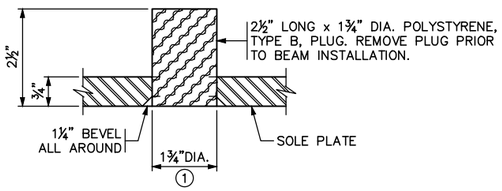

PINTLE HOLE DETAIL

NOTES:

MATERIAL TO BE STRUCTURAL STEEL PER MnDOT SPEC. 3306.

WELDED STUDS TO BE WELDABLE CARBON STEEL PER MnDOT SPEC. 3391.2D.

SOLE PLATE FOR BEARING ASSEMBLY TO BE GALVANIZED PER MnDOT SPEC. 3394 AFTER FABRICATION.

PINTLE HOLES SHALL BE FREE OF ZINC BUILD UP FROM GALVANIZING.

SOLE PLATES ARE INCIDENTAL TO PRESTRESSED CONCRETE BEAMS.

(1) FOR 1½" DIA. PINTLES.

(2) THESE DIMENSIONS MAY BE MODIFIED TO CLEAR PRESTRESSED STRANDS. HOWEVER, CHANGES MUST BE APPROVED BY THE ENGINEER.

(3) THE REQUIREMENTS FOR WELDING STUDS SHALL COMPLY WITH AASHTO/AWS D1.1.

APPROVED: SEPTEMBER 22, 2011	STATE OF MINNESOTA DEPARTMENT OF TRANSPORTATION	REVISED	DETAIL NO.
Nancy Daubenberger STATE BRIDGE ENGINEER	SOLE PLATE (PRESTRESSED CONCRETE BEAMS) (FOR BEARINGS WITH PINTLES)		B303

NO.	DATE	BY	CHECK	DESIGN	REVISION / SUBMITTAL

DESIGNED BY: BAW CHECKED BY: EJT
DRAWN BY: LMT CHECKED BY: EJT

AECOM Kimley»Horn

90% SUBMISSION - 01/22/16

METROPOLITAN COUNCIL

SOUTHWEST Green Line LRT Extension

CIVIL - VOLUME 4G
LRT OVER BNSF
BRIDGE R0697
BRIDGE DETAILS 2

DISCIPLINE: STRUCTURES
SHEET NAME: CBRR0697-BRG-DTL-001-2

SHEET 101 OF 118

Jan, 18 2016 01:50 pm V:\3400_ADC\CAD\SEGMENT E4\PLAN SHEETS\STRUCTURES\R0697\CBRR0697-BRG-DTL-001.dwg By: lisa.thompson

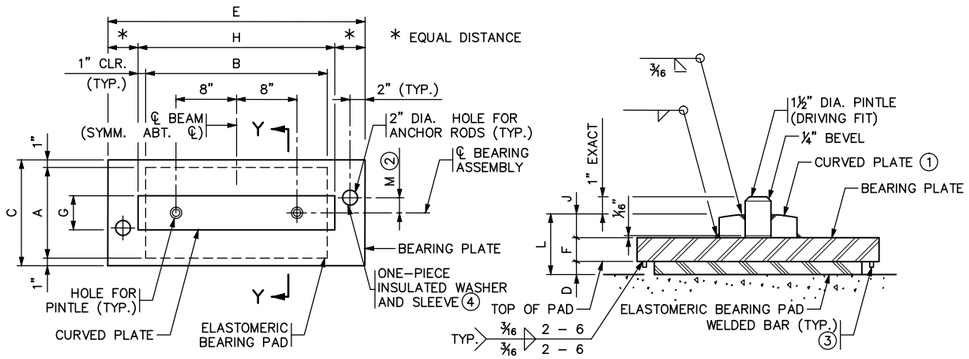

PLAN

SECTION Y–Y

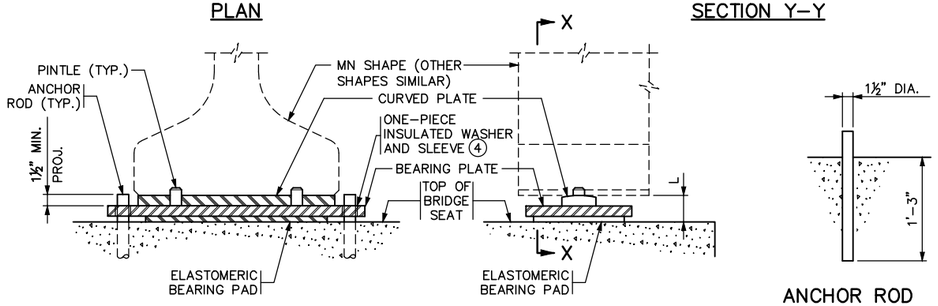

SECTION X–X

SIDE ELEVATION

ANCHOR RODS NOT SHOWN

ANCHOR ROD DETAIL ⑤

TABLE															
ASSEMBLY TYPE	LOCATION	BEAM SIZE	BEARING PAD SIZE			SHAPE FACTOR	BEARING PLATE SIZE			CURVED PLATE SIZE			ANCHOR ROD OFFSET		ASSY. HEIGHT	CURVED PLATE
			A	B	D		C	E	F	G	H	J	+/–②	M	L	R ①
F1	PIER 4 & PIER 5	MN54	12"	24"	½"	8.0	14"	38"	1½"	4½"	26"	1¼"	+	0"	3¼"	16"
~~——~~	~~——~~	~~MW~~	~~16"~~	~~36"~~	~~½"~~	~~11.1~~	~~18"~~	~~——~~	~~1½"~~	~~4½"~~	~~38"~~	~~1¼"~~	~~——~~	~~——~~	~~3¼"~~	~~——~~

NOTES:

PROVIDE ELASTOMERIC MATERIALS AND PAD CONSTRUCTION PER SPEC. 3741.

PROVIDE STEEL PLATES PER SPEC. 3306.

PROVIDE ANCHOR RODS PER SPEC. 3385, TYPE A. GALVANIZE PER SPEC. 3392.

PROVIDE PINTLES PER SPEC. 3309.

GALVANIZE STRUCTURAL STEEL BEARING ASSEMBLY AFTER FABRICATION PER SPEC. 3394, EXCEPT AS NOTED.

~~PAYMENT FOR BEARING ASSEMBLY INCLUDES ALL MATERIAL ON THIS DETAIL.~~

ALL BEARINGS SHALL PROVIDE ELECTRICAL ISOLATION OF EMBEDDED STEEL ELEMENTS LOCATED ABOVE THE BEARING ASSEMBLIES FROM EMBEDDED STEEL ELEMENTS LOCATED BELOW THE BEARING ASSEMBLIES.

① THE MIN. RADIUS IS 16" UNLESS OTHERWISE SPECIFIED IN THE TABLE. THE MAX. RADIUS IS 24". FINISH TO 250 MICRO. THE FINISHED THICKNESS OF THE PLATE MAY BE 1/16" LESS THAN SHOWN.

② "+" DENOTES OFFSET AS SHOWN.
"–" DENOTES OFFSET OPPOSITE OF SHOWN.

③ ⅜" X ⅜" BAR INSTALLED ON BEARING PLATE AROUND PERIMETER OF BEARING PAD. BAR LENGTH IS 2" LESS THAN ADJACENT PAD DIMENSION, CENTERED ON PAD. CENTERLINE OF BAR TO EDGE OF PAD DIMENSION = ½".

④ INSULATED SLEEVE SHALL EXTEND A MINIMUM OF ½" BELOW BOTTOM OF BEARING PLATE

⑤ PLACE ANCHOR BOLTS USING APPROVED ELASTOMERIC GROUT.

DESIGN DATA:
MAXIMUM HORIZONTAL LOAD IS 70 KIPS FOR 1½" PINTLES.

APPROVED: SEPTEMBER 22, 2011	STATE OF MINNESOTA DEPARTMENT OF TRANSPORTATION	REVISED	DETAIL NO.
Nancy Daubenberger STATE BRIDGE ENGINEER	CURVED PLATE BEARING ASSEMBLY (PRESTRESSED CONCRETE BEAMS) (FIXED)	11–06–2013 11–03–2015	B310

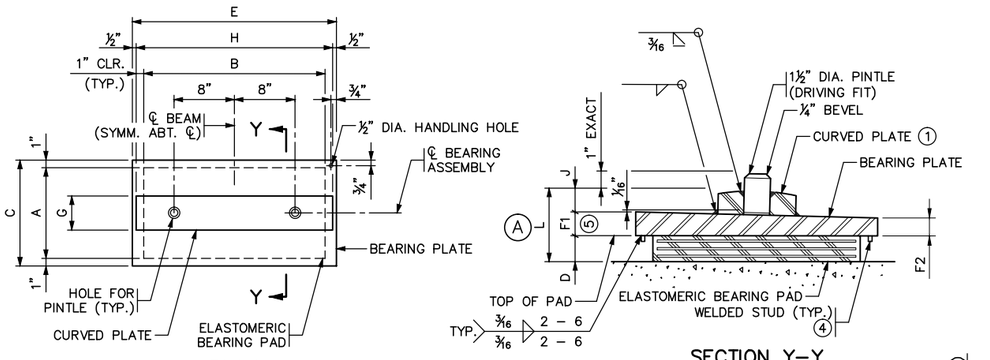

PLAN

SECTION Y–Y

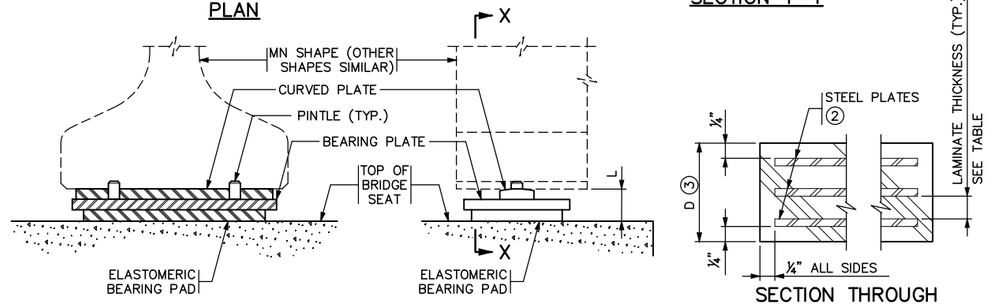

SECTION X–X

SIDE ELEVATION

SECTION THROUGH ELASTOMERIC BEARING PAD

TABLE																			
ASSEMBLY TYPE	LOCATION	BEAM SIZE	BEARING PAD SIZE			STEEL PLATES		LAMINATES		SHAPE FACTOR	BEARING PLATE SIZE					CURVED PLATE SIZE			ASSY. HEIGHT	CURVED PLATE
			A	B	D	NO.	THICK.	NO.	THICK.		C	E	F1	F ⑥	F2	G	H	J	L ⑥	R ①
E1	S. ABUT.	MN54	20"	24"	6¾"	8	⅛"	7	¾"	7.3	22"	27"	2¾"	2¾"	1¾"	8"	26"	1¼"	10¼"	18"
E2	PIER 1	MN54	12"	24"	5"	8	⅛"	7	½"	8.0	14"	27"	1¾"	1½"	1¼"	4½"	26"	1¼"	7¾"	16"
E3	PIER 2	MN54	12"	24"	3¾"	6	⅛"	5	½"	8.0	14"	27"	——	1½"	——	4½"	26"	1¼"	6½"	16"
E4	PIER 3	MN54	12"	24"	1⅞"	3	⅛"	2	½"	8.0	14"	27"	——	1½"	——	4½"	26"	1¼"	4⅝"	16"
E5	PIER 6	MN54	12"	24"	3⅛"	5	⅛"	4	½"	8.0	14"	27"	——	1½"	——	4½"	26"	1¼"	5⅞"	16"
E6	PIER 7	MN54	12"	24"	4⅜"	7	⅛"	6	½"	8.0	14"	27"	——	1½"	——	4½"	26"	1¼"	7⅛"	16"
E7	PIER 8	MN54	16"	24"	5⅝"	9	⅛"	8	½"	9.6	18"	27"	——	2"	——	6"	26"	1¼"	8⅞"	16"
E8	PIER 8	GIRDER	14"	24"	4⅜"	7	⅜"	6	½"	8.8	16"	27"	——	2"	——	4½"	26"	1¼"	7⅜"	16"
E9	N. ABUT.	GIRDER	16"	24"	5"	8	⅛"	7	½"	9.6	18"	27"	——	2"	——	6"	26"	1¼"	8¼"	16"

NOTES:

PROVIDE ELASTOMERIC MATERIALS AND PAD CONSTRUCTION PER SPEC. 3741.

PROVIDE STEEL PLATES PER SPEC. 3306.

PROVIDE PINTLES PER SPEC. 3309.

GALVANIZE STRUCTURAL STEEL BEARING ASSEMBLY AFTER FABRICATION PER SPEC. 3394, EXCEPT AS NOTED.

~~PAYMENT FOR BEARING ASSEMBLY INCLUDES ALL MATERIAL ON THIS DETAIL.~~

① THE MIN. RADIUS IS 16" UNLESS OTHERWISE SPECIFIED IN THE TABLE. THE MAX. RADIUS IS 24". FINISH TO 250 MICRO. THE FINISHED THICKNESS OF THE PLATE MAY BE 1/16" LESS THAN SHOWN.

② DO NOT GALVANIZE THESE PLATES.

③ THE TOTAL THICKNESS SHOWN INCLUDES THE STEEL PLATES.

④ ⅜" X ⅜" BAR INSTALLED ON BEARING PLATE AROUND PERIMETER OF BEARING PAD. BAR LENGTH IS 2" LESS THAN ADJACENT PAD DIMENSION, CENTERED ON PAD. CENTERLINE OF BAR TO EDGE OF PAD DIMENSION = ½".

⑤ MARK THICKER SIDE OF SLOPED PLATES WITH AN "H" FOR PLACEMENT. SEE FRAMING PLAN SHEET NO. 48.

⑥ THICKNESS AT ℄ BEARING.

SHEET MODIFICATION:
(A) DENOTES MODIFICATION TO STANDARD SHEET

DESIGN DATA:
MAXIMUM HORIZONTAL LOAD IS 70 KIPS FOR 1½" PINTLES.

APPROVED: SEPTEMBER 22, 2011	STATE OF MINNESOTA DEPARTMENT OF TRANSPORTATION	REVISED	DETAIL NO.
Nancy Daubenberger STATE BRIDGE ENGINEER	CURVED PLATE BEARING ASSEMBLY (PRESTRESSED CONCRETE BEAMS) (EXPANSION)	11–03–2015	B311 (MOD)

NO.	DATE	BY	CHECK	DESIGN	REVISION / SUBMITTAL

DESIGNED BY: HLR | CHECKED BY: JBW
DRAWN BY: LMT | CHECKED BY: EJT

AECOM Kimley»Horn

90% SUBMISSION - 01/22/16

METROPOLITAN COUNCIL

SOUTHWEST Green Line LRT Extension

CIVIL - VOLUME 4G
LRT OVER BNSF
BRIDGE R0697
BRIDGE DETAILS 3

DISCIPLINE: STRUCTURES
SHEET NAME: CBRR0697-BRG-DTL-001-3

SHEET 102 OF 118

Jan. 18 2016 01:50 pm V:\3400_ADC\CAD\SEGMENT E4\PLAN SHEETS\STRUCTURES\R0697\CBRR0697-BRG-DTL-001.dwg By: lisa.thompson

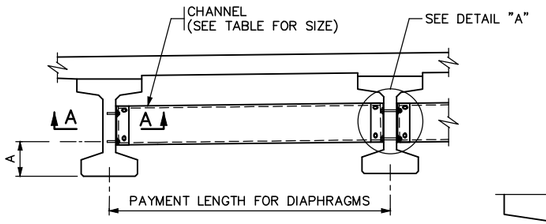

PART TRANSVERSE SECTION AT DIAPHRAGM

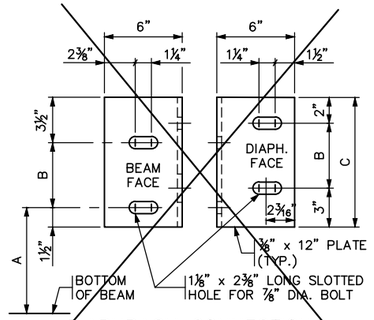

DIAPHRAGM CONNECTION

FOR 36M AND MN45 BEAMS

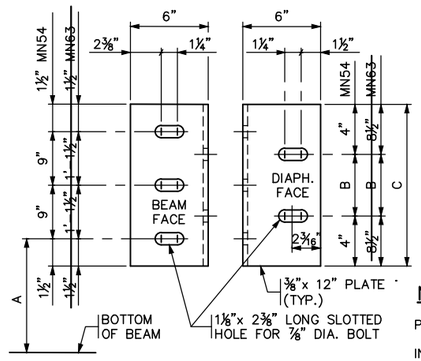

DIAPHRAGM CONNECTION

FOR MN54 AND MN63 BEAMS

TABLE				
BEAM HEIGHT	DISTANCE			CHANNEL SIZE
	A	B	C	
~~36M~~	~~1' 3"~~	~~7"~~	~~1' 0"~~	~~C12x20.7~~
~~MN45~~	~~1'-7¾"~~	~~7"~~	~~1'-0"~~	~~C12x20.7~~
MN54	1'-7¾"	1'-1"	1'-9"	MC18x42.7
~~MN63~~	~~1'-7¾"~~	~~1' 1"~~	~~2' 6"~~	~~MC18x42.7~~

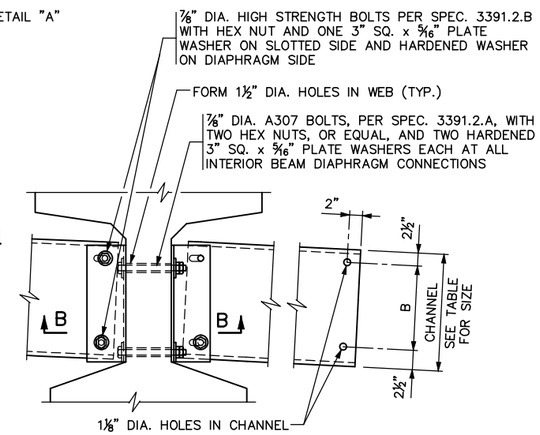

DETAIL "A"

INTERIOR BEAM WITH CONTINUOUS LINE OF DIAPHRAGMS

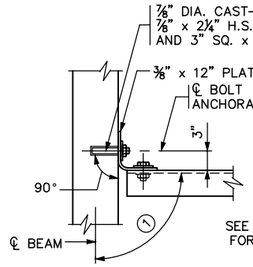

SECTION A–A

TYPICAL SECTION AT ALL FASCIA BEAMS

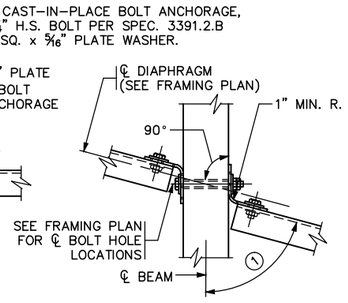

SECTION B–B

TYPICAL SECTION AT INTERIOR BEAM WITH CONTINUOUS OR STAGGERED INTERMEDIATE DIAPHRAGMS

NOTES:

PROVIDE STEEL PER SPEC. 3306.

INSTALL PER SPEC. 2405.3.K.

TORQUE ALL BOLTS, INCLUDING ANCHOR BOLTS TO 80 FT.–LBS.

SHOP BEND THE LEG OF THE 12" PLATE TO CONFORM TO THE DIAPHRAGM. A ⅜" x 6" x 6" ANGLE MAY BE USED FOR DIAPHRAGMS PERPENDICULAR TO BEAMS.

~~INCLUDE ALL STRUCTURAL STEEL SHOWN ON THIS DETAIL, INCLUDING BOLTS AND WASHERS, IN UNIT PRICE BID FOR DIAPHRAGMS FOR PRESTRESSED BEAMS.~~

BENT PLATES MAY BE USED IN PLACE OF CHANNELS IF THE BENT PLATES HAVE THE SAME HEIGHT AS THE CHANNELS THEY REPLACE, ARE 5⁄16" IN THICKNESS, AND HAVE LEGS 5" LONG.

GALVANIZE STEEL PLATES AND SHAPES PER SPEC. 3394.

GALVANIZE BOLTS, NUTS AND WASHERS PER SPEC. 3392.

① FOR SKEW ANGLES UNDER 20°, USE 90° LESS THE SKEW ANGLE. FOR SKEW ANGLES OVER 20°, USE 90°.

APPROVED: NOVEMBER 03, 2015	STATE OF MINNESOTA DEPARTMENT OF TRANSPORTATION		DETAIL NO.
STATE BRIDGE ENGINEER	STEEL INTERMEDIATE DIAPHRAGM (FOR 36M, MN45 – MN63 PRESTRESSED CONCRETE BEAMS)		B403

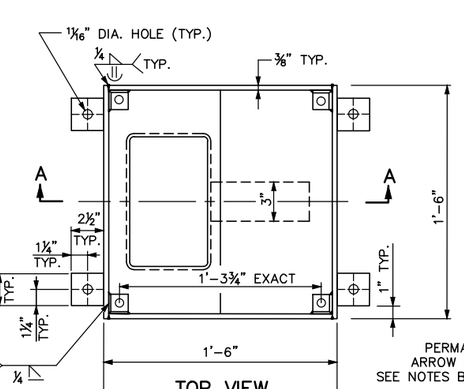

TOP VIEW

SCUPPER

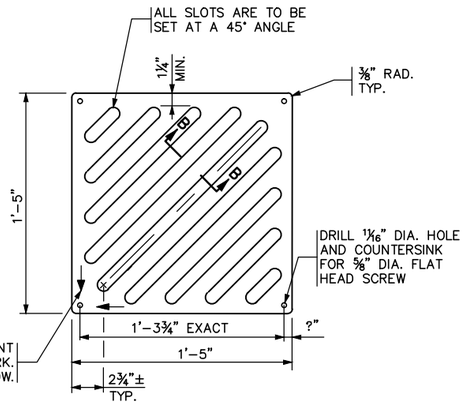

TOP VIEW

GRATE

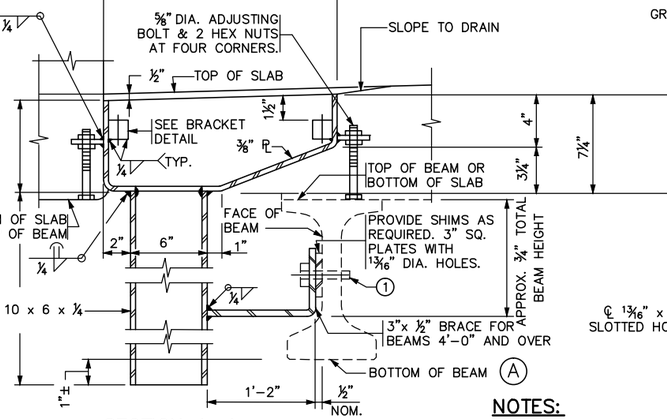

SECTION A–A

~~STEEL BEAM SHOWN~~ (A)

BRACKET DETAIL

SECTION B–B

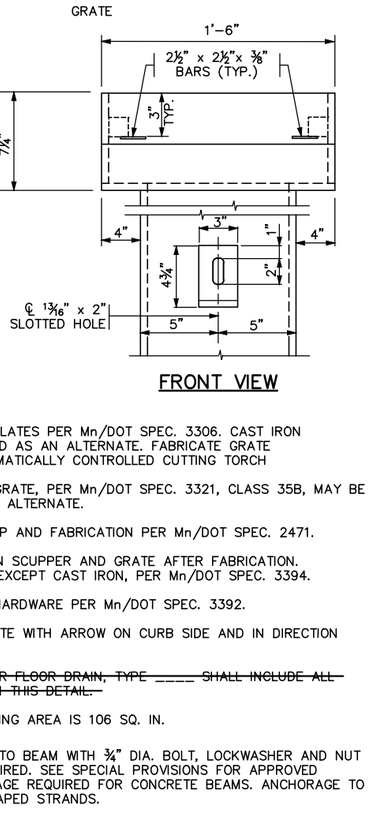

FRONT VIEW

NOTES:

ALL STEEL PLATES PER Mn/DOT SPEC. 3306. CAST IRON MAY BE USED AS AN ALTERNATE. FABRICATE GRATE USING AUTOMATICALLY CONTROLLED CUTTING TORCH

CAST IRON GRATE, PER Mn/DOT SPEC. 3321, CLASS 35B, MAY BE USED AS AN ALTERNATE.

WORKMANSHIP AND FABRICATION PER Mn/DOT SPEC. 2471.

BLAST CLEAN SCUPPER AND GRATE AFTER FABRICATION. GALVANIZE, EXCEPT CAST IRON, PER Mn/DOT SPEC. 3394.

GALVANIZE HARDWARE PER Mn/DOT SPEC. 3392.

INSTALL GRATE WITH ARROW ON CURB SIDE AND IN DIRECTION OF FLOW.

~~PAYMENT FOR FLOOR DRAIN, TYPE _____ SHALL INCLUDE ALL MATERIAL ON THIS DETAIL.~~

GRATE OPENING AREA IS 106 SQ. IN.

① ATTACH TO BEAM WITH ¾" DIA. BOLT, LOCKWASHER AND NUT AS REQUIRED. SEE SPECIAL PROVISIONS FOR APPROVED ANCHORAGE REQUIRED FOR CONCRETE BEAMS. ANCHORAGE TO MISS DRAPED STRANDS.

SHEET MODIFICATION:
(A) DENOTES MODIFICATION TO STANDARD SHEET

APPROVED: NOVEMBER 22, 2002	STATE OF MINNESOTA DEPARTMENT OF TRANSPORTATION	REVISION	DETAIL NO.
STATE BRIDGE ENGINEER	BRIDGE FLOOR DRAIN (WELDED BOX)		B701 (MOD.)

NO.	DATE	BY	CHECK	DESIGN	REVISION / SUBMITTAL

DESIGNED BY: BAW CHECKED BY: EJT
DRAWN BY: LMT CHECKED BY: EJT

AECOM Kimley»Horn

90% SUBMISSION - 01/22/16

METROPOLITAN COUNCIL

SOUTHWEST Green Line LRT Extension

CIVIL - VOLUME 4G
LRT OVER BNSF
BRIDGE R0697
BRIDGE DETAILS 4

DISCIPLINE: STRUCTURES
SHEET NAME: CBRR0697-BRG-DTL-001-4

SHEET 103 OF 118

Jan, 18 2016 01:50 pm V:\3400_ADC\CAD\SEGMENT E4\PLAN SHEETS\STRUCTURES\R0697\CBRR0697-BRG-DTL-001.dwg By: lisa.thompson

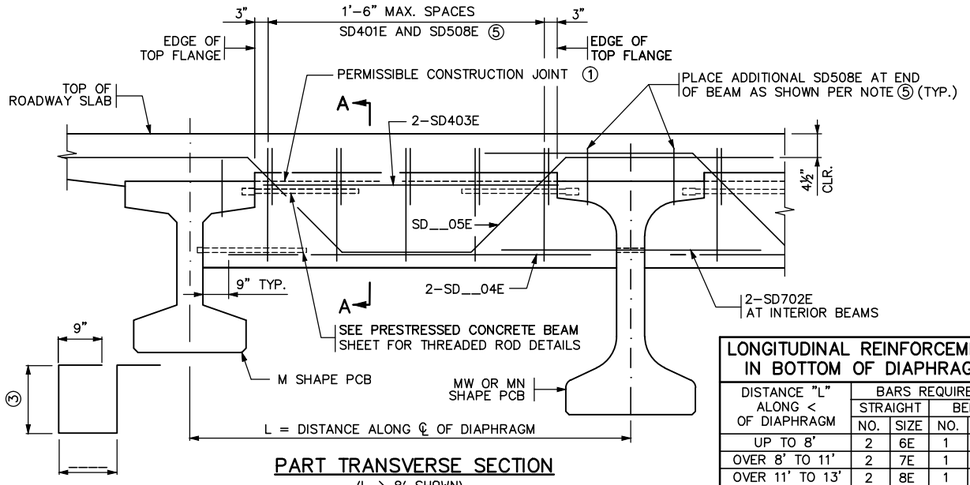

PART TRANSVERSE SECTION

(L > 8' SHOWN)

SD401E

LONGITUDINAL REINFORCEMENT IN BOTTOM OF DIAPHRAGM				
DISTANCE "L" ALONG < OF DIAPHRAGM	BARS REQUIRED			
	STRAIGHT		BENT	
	NO.	SIZE	NO.	SIZE
UP TO 8'	2	6E	1	5E
OVER 8' TO 11'	2	7E	1	6E
OVER 11' TO 13'	2	8E	1	8E
OVER 13' TO 15'	2	9E	1	10E
OVER 15' TO 18'	2	11E	1	11E

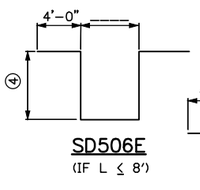

SD506E

(IF L ≤ 8')

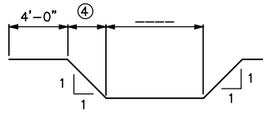

SD_05E

(IF L > 8')

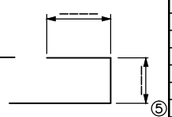

SD508E ⑤

BILL OF REINFORCEMENT FOR END DIAPHRAGM				
BAR	NO.	LENGTH	SHAPE	LOCATION
SD401E				VERTICAL TIE
SD702E		5'-0"		LONG. THRU BEAM
SD403E				LONG. TOP
SD_04E				LONG. BOTTOM
SD_05E				LONGITUDINAL
SD506E				LONGITUDINAL
⑤ SD507E				LONGITUDINAL
⑤ SD508E				VERTICAL TIE

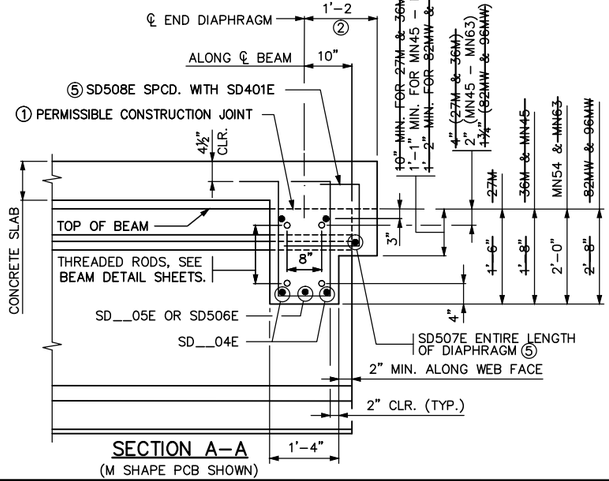

SECTION A-A

(M SHAPE PCB SHOWN)

NOTES:

CONCRETE FOR END DIAPHRAGMS SHALL BE THE SAME MIX AS USED IN DECK.

~~QUANTITIES FOR END DIAPHRAGM CONCRETE AND REINFORCEMENT SHOWN ON THIS DETAIL SHALL BE LISTED IN SUPERSTRUCTURE QUANTITIES.~~

THREADED RODS ARE INCIDENTAL TO PRESTRESSED CONCRETE BEAMS.

① USE OF CONSTRUCTION JOINT REQUIRES CLEARANCE FOR EXPANSION DEVICE. WHEN CONSTRUCTION JOINT IS USED AT THIS LOCATION, DIAPHRAGM FALSEWORK SHALL REMAIN INPLACE UNTIL COMPLETION OF SLAB CURING PERIOD.

② PERPENDICULAR TO CENTERLINE OF DIAPHRAGM.

③ 1'-11" (27M); 2'-1" (36M AND MN45); 2'-5" (MN54 AND MN63); 3'-1" (82MW AND 96MW). BASED ON 3" STOOL AND 9" DECK.

④ 1'-10" (27M); 2'-0" (36M AND MN45); 2'-4" (MN54 AND MN63); 3'-0" (82MW AND 96MW). BASED ON NOTE ③.

⑤ ADD SD507E AND SD508E ONLY IF NO. OF BARS AND LENGTHS ARE INCLUDED IN BILL OF REINFORCEMENT. SPACE SD508E AT 1'-6" MAX. FOR ENTIRE LENGTH OF DIAPHRAGM. REFER TO "PART TRANSVERSE SECTION" ABOVE.

APPROVED: SEPTEMBER 22, 2011	STATE OF MINNESOTA DEPARTMENT OF TRANSPORTATION	REVISED 04-17-2013 11-06-2013	DETAIL NO.
Nancy Daubenberger STATE BRIDGE ENGINEER	CONCRETE END DIAPHRAGM (27M & 36M, MN45 - MN63, 82MW & 96MW PRESTRESSED CONCRETE BEAMS) (PARAPET ABUTMENT)		B814

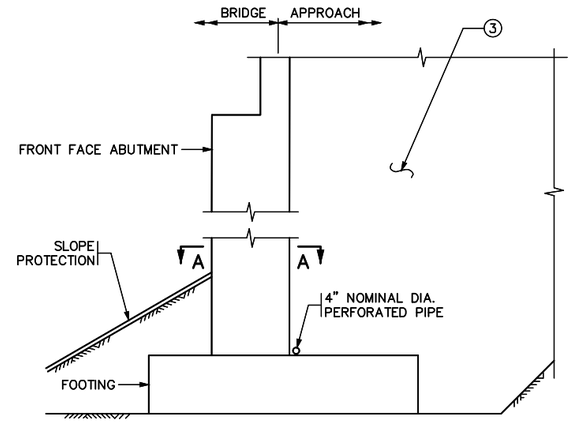

SECTION THROUGH PARAPET AND ~~SEMI-INTEGRAL~~ ABUTMENTS

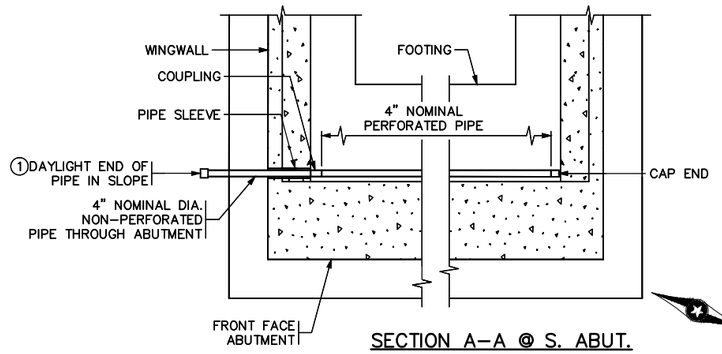

SECTION A-A @ S. ABUT.

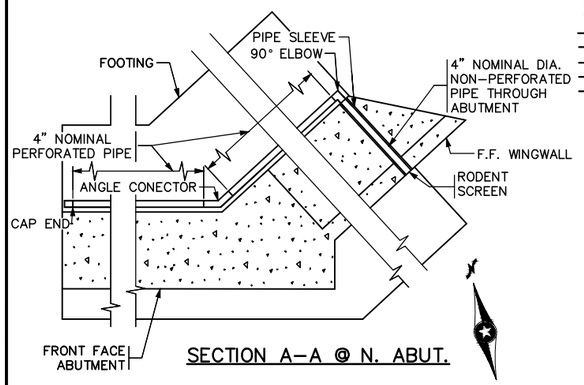

SECTION A-A @ N. ABUT.

NOTES:

~~PAYMENT WILL BE INCLUDED IN THE SINGLE LUMP SUM PRICE FOR "DRAINAGE SYSTEM TYPE (B910)", INCLUDES BUT IS NOT LIMITED TO 4" DIAMETER PERFORATED AND NON PERFORATED PIPE, ELBOWS, END CAPS, COUPLINGS, SLEEVES AND PRECAST CONCRETE HEADWALLS.~~

ALL PIPE TO COMPLY WITH SPEC. 3245.

WRAP PERFORATED PIPE WITH GEOTEXTILE PER SPEC. 3733, TYPE 1. ATTACH TO PIPE PER SPEC. 2502.

① AT CONTRACTOR'S OPTION, MAY TIE APPROACH PANEL DRAINAGE SYSTEM AND ABUTMENT DRAINAGE SYSTEM INTO A SINGLE PRECAST CONCRETE HEADWALL OR INTO A CATCH BASIN AS LONG AS A MINIMUM OF 1% POSITIVE SLOPE CAN BE MANTAINED.

USE PRECAST CONCRETE HEADWALL WITH RODENT SCREEN. SEE STANDARD PLATE 3131 FOR DETAILS.

② ⅛" PER FT. MINIMUM SLOPE.

③ REFER TO GRADING PLANS FOR ABUTMENT BACKFILL REQUIREMENTS.

APPROVED: JANUARY 13, 2015	STATE OF MINNESOTA DEPARTMENT OF TRANSPORTATION	REVISED 12-02-2015	DETAIL NO.
Nancy Daubenberger STATE BRIDGE ENGINEER	DRAINAGE SYSTEM		B910 (MOD)

NO.	DATE	BY	CHECK	DESIGN	REVISION / SUBMITTAL

DESIGNED BY: BAW CHECKED BY: EJT

DRAWN BY: LMT CHECKED BY: EJT

AECOM Kimley»Horn

90% SUBMISSION - 01/22/16

METROPOLITAN COUNCIL

SOUTHWEST Green Line LRT Extension

CIVIL - VOLUME 4G
LRT OVER BNSF
BRIDGE R0697
BRIDGE DETAILS 5

DISCIPLINE: STRUCTURES

SHEET NAME: CBRR0697-BRG-DTL-001-5

SHEET 104 OF 118

Jan. 18 2016 01:50 pm V:\3400_ADC\CAD\SEGMENT E4\PLAN SHEETS\STRUCTURES\R0697\CBRR0697-BRG-DTL-001.dwg By: lisa.thompson

CONCRETE WEARING COURSE

☐ LOW SLUMP

☐ OTHER _____
TYPE OR MANUFACTURER

EXPANSION JOINTS

JOINT MANUFACTURER

MANUFACTURER'S IDENTIFICATION _____
MFR'S No. AND/OR LETTER DESIGNATION FOR JOINT USED

GLAND MANUFACTURER _____
NAME AND ADDRESS (CITY, STATE)

SIZE OF GLAND _____

MANUFACTURER'S IDENTIFICATION _____
MFR'S No. AND/OR LETTER DESIGNATION FOR GLAND USED

ELASTOMERIC BEARING PADS

PAD MANUFACTURER _____
NAME AND ADDRESS (CITY, STATE)

SPECIAL SURFACE FINISH

SYSTEM: _____ COLOR: _____

FINISHING ROADWAY FACES OF BARRIER RAILING

TYPE: _____ COLOR: _____

ANTI-GRAFFITI COATING

MANUFACTURER _____
NAME AND ADDRESS (CITY, STATE)

PRODUCT NAME: _____ LOCATION: _____

PAINT SYSTEM

Mn/DOT SPECIFICATION NUMBER _____
2478 OR 2479 OR OTHER

MANUFACTURER _____
NAME AND ADDRESS (CITY, STATE)

PRIME COAT _____
Mn/DOT MATERIAL SPECIFICATION NUMBER

INTERMEDIATE COAT _____
Mn/DOT MATERIAL SPECIFICATION NUMBER

FINISH COAT _____ _____
Mn/DOT MATERIAL SPECIFICATION NUMBER COLOR

PLAN QUALITY

RATE 1 (AGREE), 2 (NEUTRAL), OR 3 (DISAGREE, PLEASE COMMENT BELOW)

DIMENSIONING AND DETAILING ADEQUATELY DESCRIBED REQUIRED CONSTRUCTION. _____
BAR LISTS AND QUANTITIES WERE TYPICALLY COMPLETE AND FREE OF ERRORS. _____
SCALE OF DRAWINGS AND OVERALL LEGIBILITY OF LINES AND TEXT WAS GOOD. _____
(SB) SPECIAL PROVISIONS ADEQUATELY DESCRIBED SPECIAL WORK AND PAYMENT. _____

COMMENTS: _____

NUMBER OF BRIDGE SUPPLEMENTAL AGREEMENTS: _____ COST: $ _____

LIST SIGNIFICANT ERRORS OR OMISSIONS IN PLAN DETAILS OR PAY QUANTITIES IN THE SPACE PROVIDED AT RIGHT.

BRIDGE REMOVAL / BRIDGE OPENING

NUMBER OF AND DATE OLD BRIDGE WAS REMOVED (IF APPLICABLE):

BRIDGE NUMBER _____ DATE REMOVED _____

DATE NEW BRIDGE WAS OPENED TO TRAFFIC _____

NOTIFY THE BRIDGE OFFICE BRIDGE MANAGEMENT UNIT WITH THIS INFORMATION AS SOON AS POSSIBLE. (651) 366-4557

OTHER ITEMS ①

① UTILITIES ADDED DURING CONSTRUCTION AND SPECIALTY ITEMS.

FINAL QUANTITIES ENTERED ON SCHEDULE OF QUANTITIES: YES ☐ NO ☐

SUMMARY OF SIGNIFICANT AS-BUILT CHANGES

THE AS-BUILT INFORMATION WAS ADDED TO THE PLAN BY:

_____ _____
INSPECTOR(S) SIGNATURE DATE

CHECKED BY: _____ _____
PROJECT ENGINEER/SUPERVISOR SIGNATURE DATE

AT THE TIME OF THE FINAL, THIS COMPLETED AS-BUILT BRIDGE DATA SHEET MUST BE SUBMITTED TO THE BRIDGE OFFICE – ATTN: REGIONAL CONSTRUCTION ENGINEER (MS610).

REVISION: 10-28-2008

APPROVED: SEPTEMBER 26, 2003

Daniel L. Dorgan
STATE BRIDGE ENGINEER

AS-BUILT DETAILS
(AS NEEDED)

DRAFT-WORK IN PROCESS

FIG. 5-397.900

TITLE: AS-BUILT BRIDGE DATA

DES: DR: CHK: CHK:

APPROVED:

SHEET NO. 105 OF 118 SHEETS

BRIDGE NO. R0697

Jan, 18 2016 01:51 pm V:\3400_ADC\CAD\SEGMENT E4\PLAN SHEETS\STRUCTURES\R0697\CBRR0697-BRG-DTL-002.dwg By: lisa.thompson

CONTRACTED PROFILE

SCALE HOR: 0 100'

SCALE VER: 0 20'

PROFILE GRADE TOP OF RAIL @ ℄ TRACK 2 (FG–EB–TRK–E4)

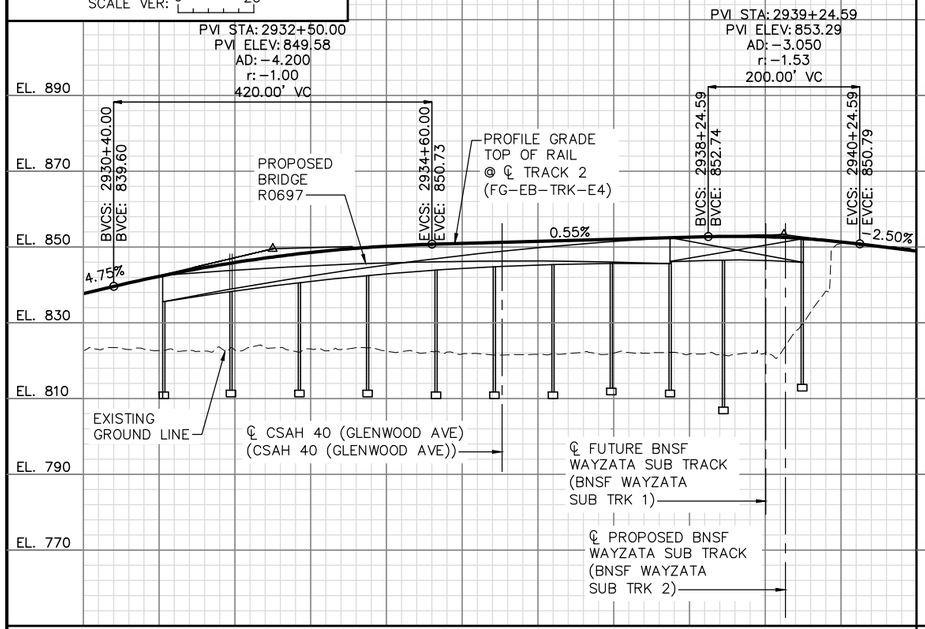

PROFILE GRADE TOP OF RAIL @ ℄ TRACK 1 (FG–WB–TRK–E4)

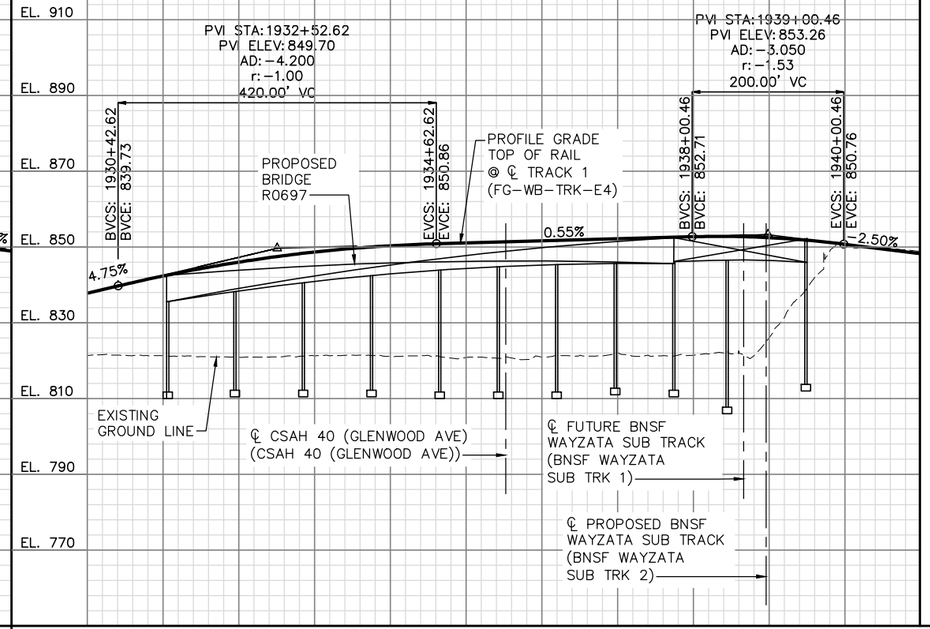

PLAT

SCALE: 0 100'

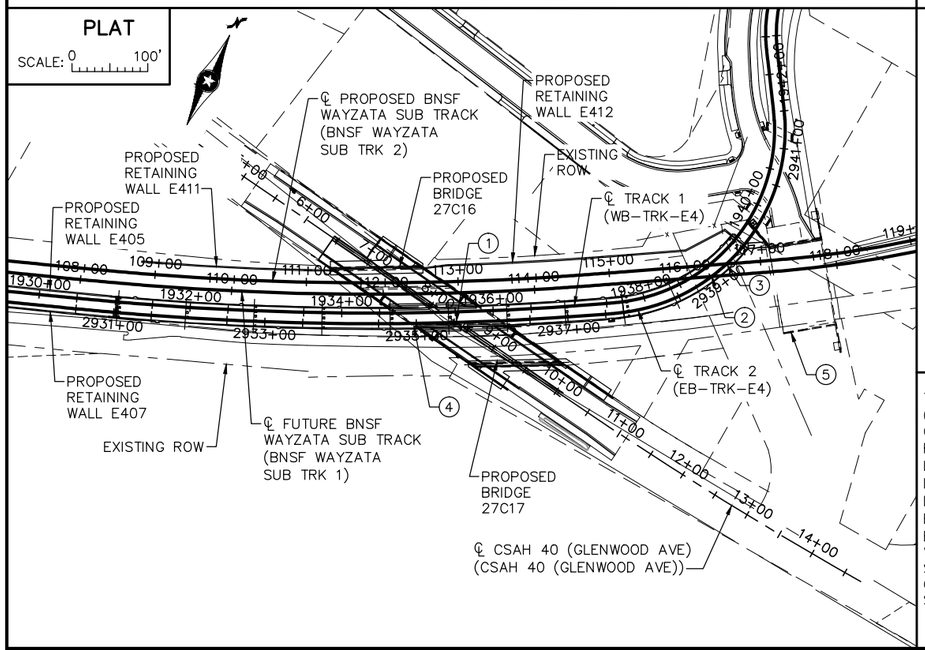

NOTES:

1. ℄ CONTROL POINT
   ℄ TRACK 2 (EB–TRK–E4) P.O.C. 2935+52.51
   ℄ CSAH 40 (GLENWOOD AVE)
   (CSAH 40 (GLENWOOD AVE)) P.O.T. 8+39.83
   X = 525815.344 Y = 168533.506
   Δ = 36°17'28.1" (T.T.C.)

2. ℄ TRACK 2 (EB–TRK–E4) P.O.C. 2939+00.72
   ℄ FUTURE BNSF WAYZATA SUB TRACK
   (BNSF WAYZATA SUB TRK 1) P.O.T. 116+34.22
   X = 526077.848 Y = 168753.465
   Δ = 32°40'49.9" (T.T.C.)

3. ℄ TRACK 2 (EB–TRK–E4) P.O.C. 2939+26.44
   ℄ PROPOSED BNSF WAYZATA SUB TRACK
   (BNSF WAYZATA SUB TRK 2) P.O.T. 116+55.17
   X = 526086.701 Y = 168777.597
   Δ = 38°43'10.1" (T.T.C.)

4. EXISTING BRIDGE NO. 27569 TO BE REMOVED, 181.9' LONG AND 70.4' WIDE, TWO STEEL CONT. BEAM SPANS BUILT IN 1988.

5. EXISTING BRIDGE NO. 27699 TO REMAIN, 116.7' LONG & 70.4' WIDE, ONE PCB SPAN BUILT IN 2000.

TRACK 2 (FG–EB–TRK–E4) CURVE NO. E4–209A	TRACK 2 (FG–EB–TRK–E4) CURVE NO. E4–209B	TRACK 1 (FG–WB–TRK–E4) CURVE NO. E4–109A	TRACK 1 (FG–WB–TRK–E4) CURVE NO. E4–109B
R = 3804.00'	R = 244.00'	R = 3790.00'	R = 230.00'
Lc = 612.52'	Lc = 360.51'	Lc = 609.91'	Lc = 338.11'
Ls1 = 160.00'	Ls = 30.00'	Ls1 = 160.00'	Ls = 30.00'
Ls2 = 30.00'	Ea = 0.00"	Ls2 = 30.00'	Ea = 0.00"
Ea = 0.00"	Eu = 1.62"	Ea = 0.00"	Eu = 1.72"
Eu = 2.60"–0.10"	V = 10 MPH	Eu = 2.61"–0.10"	V = 10 MPH
V = 50–10 MPH	SC: 2937+78.57	V = 50–10 MPH	SC: 1937+75.95
SC: 2931+36.05	CS: 2941+39.08	SC: 1931+36.05	CS: 1941+14.06
CS: 2937+48.57	ST: 2941+69.08	CS: 1937+45.95	ST: 1941+69.09
SC: 2937+75.57		SC: 1937+75.95	

INDEX MAP

SEC 22 T 29 N R 24 W

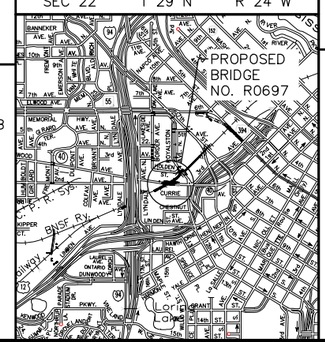

LOCATION ENGINEER'S OBSERVATIONS AT BRIDGE SITE

1. SPECIAL FEATURES: WATERFALLS, DAMS, FLOODS, ICE, DEBRIS SLIDING BANKS, RECREATIONAL BOATING.
2. OTHER BRIDGES OR CULVERTS OVER THE SAME STREAM (PARTICULARY STRUCTURES WHICH CARRY HIGH WATER WITHOUT OVERFLOW OF ROADWAY): GIVEN LOCATION, TYPE, LENGTH, HEIGHT ABOVE HIGH WATER, CROSS–SECTIONAL AREA ETC.
3. APPARENT HIGHWATER ELEVATION OBTAINED FROM:
4. OTHER DATA: APPROX. VELOCITY OF WATER AT TIME OF SURVEY.

HYDRAULIC ENGINEER'S RECOMMENDATION

DATE:

STREAM OR DITCH DESIGNATION:

DRAINAGE AREA: SQ. MI.

MAX FLOOD ON RECORD:

DESIGN FLOOD (YR. FREQ.): C.F.S.
HEADWATER ELEVATION: FT.
DESIGN MEAN VELOCITY THROUGH STRUCTURE F.P.S.
TOTAL STAGE INCREASE FT.
LOW MEMBER AT OR ABOVE ELEVATION FT.

WATERWAY AREA REQUIRED BELOW ELEV. = SQ. FT.
AT RIGHT ANGLES TO CHANNEL

BASIC FLOOD (100 YR. FREQ.) C.F.S.
HEADWATER ELEVATION: FT.
TOTAL STAGE INCREASE FT.
MEAN VELOCITY THROUGH STRUCTURE F.P.S.

FLOWLINE ELEVATION: FT. SKEW ANGLE:

ESTIMATED PRELIMINARY TOTAL SCOUR AT PIER EL.
(500 YR. FREQ.)

SCOUR CONFIRMATION RECOMMENDATION

DATE:

TOTAL SCOUR AT PIER EL. (500 OR OT YR. FREQ.)
SCOUR CODE: OBTAIN FROM HYDRAULIC ENGINEER

BRIDGE SURVEY SHEETS MADE FROM 2014 MFRA SURVEYS

1ST BENCH MARK (NAVD 88)
BENCHMARK ID PT. 78
ELEVATION = 851.67
X = 526108.98, Y = 168845.25
DESCRIPTION = ½" PIPE W/ CAP

2ND BENCH MARK (NAVD 88)
BENCHMARK ID PT. 77
ELEVATION = 849.53
X = 526300.32, Y = 168719.56
DESCRIPTION = ½" PIPE W/ CAP

BRIDGE SURVEY 1

PROPOSED BRIDGE LOCATED:
0.1 MI. S.E. OF JCT. CSAH 40 (GLENWOOD AVENUE) AND INTERSTATE 94 IN MINNEAPOLIS.

SEC 22 T 29 N R 24 W

CITY OF MINNEAPOLIS HENNEPIN COUNTY

BRIDGE NO. R0697

NO.	DATE	BY	CHECK	DESIGN	REVISION / SUBMITTAL

DESIGNED BY: KAE CHECKED BY: EJT
DRAWN BY: LMT CHECKED BY: EJT

AECOM Kimley»Horn

90% SUBMISSION - 01/22/16

METROPOLITAN COUNCIL

SOUTHWEST Green Line LRT Extension

CIVIL - VOLUME 4G
LRT OVER BNSF
BRIDGE R0697
BRIDGE SURVEY 1

DISCIPLINE: STRUCTURES

SHEET NAME: CBRR0697-BRG-SUR-001-1

SHEET 106 OF 118

Jan. 18 2016 01:52 pm V:\3400_ADC\CAD\SEGMENT E4\PLAN SHEETS\STRUCTURES\R0697\CBRR0697-BRG-SUR-001.dwg By: lisa.thompson

CONTRACTED PROFILE

SCALE HOR: 0 50'

SCALE VER: 0 10'

PROFILE GRADE ℄ CSAH 40 (GLENWOOD AVE) (CSAH 40 (GLENWOOD AVE))

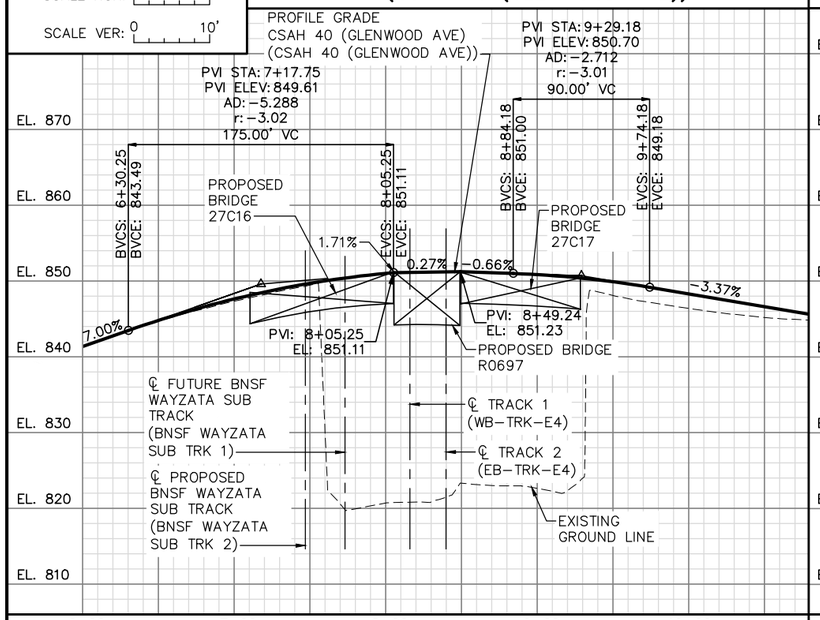

PROFILE GRADE ℄ PROPOSED BNSF WAYZATA SUB TRACK (BNSF WAYZATA SUB TRK 2)

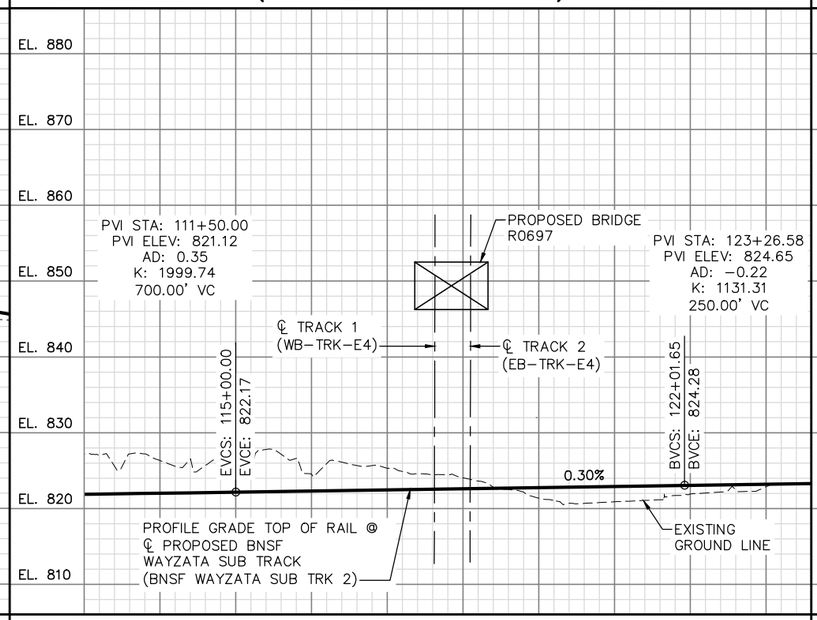

PROFILE GRADE ℄ FUTURE BNSF WAYZATA SUB TRACK (BNSF WAYZATA SUB TRK 1)

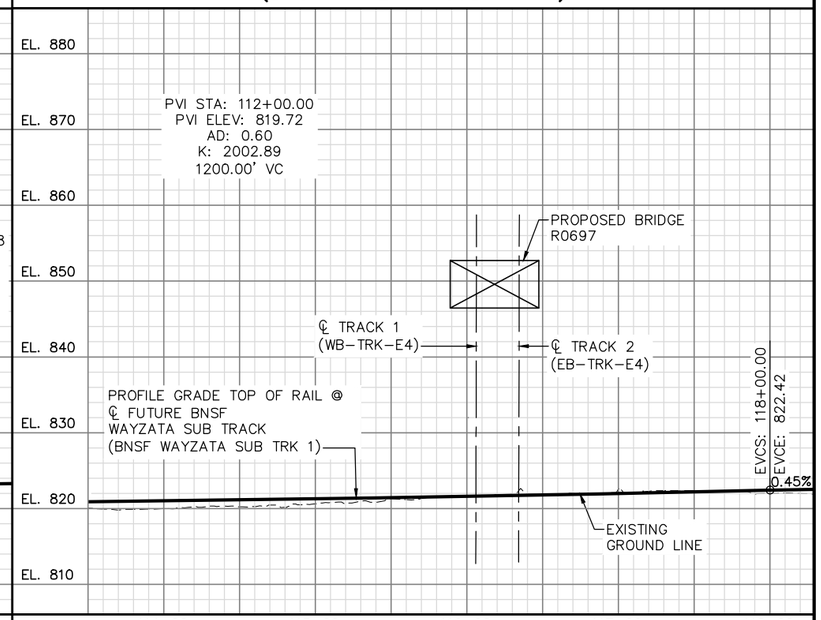

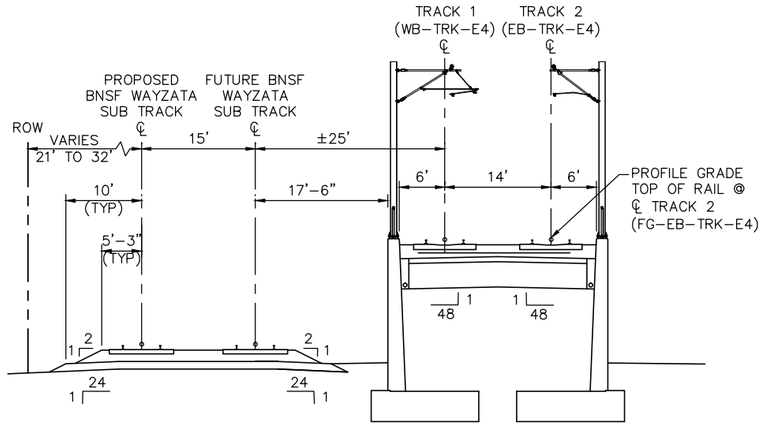

TYPICAL APPROACH SECTION

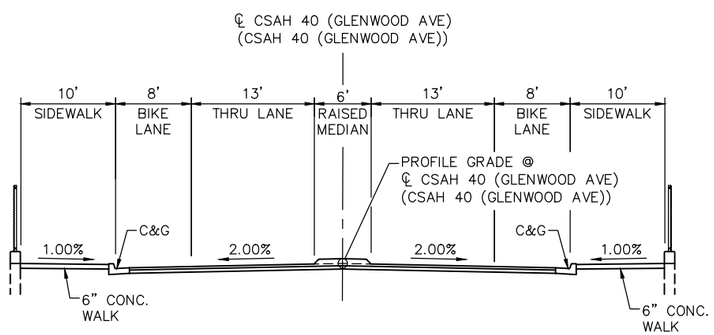

TYPICAL SECTION
CSAH 40 (GLENWOOD AVE)

NO.	DATE	BY	CHECK	DESIGN	REVISION / SUBMITTAL

DESIGNED BY: KAE CHECKED BY: EJT

DRAWN BY: LMT CHECKED BY: EJT

AECOM Kimley»Horn

90% SUBMISSION - 01/22/16

METROPOLITAN COUNCIL

SOUTHWEST Green Line LRT Extension

CIVIL - VOLUME 4G
LRT OVER BNSF
BRIDGE R0697
BRIDGE SURVEY 2

DISCIPLINE: STRUCTURES

SHEET NAME: CBRR0697-BRG-SUR-001-2

SHEET 107 OF 118

Jan, 18 2016 01:52 pm V:\3400_ADC\CAD\SEGMENT E4\PLAN SHEETS\STRUCTURES\R0697\CBRR0697-BRG-SUR-001.dwg By: lisa.thompson

℄ CSAH 40 (GLENWOOD AVE)
(CSAH 40 (GLENWOOD AVE))

℄ PROPOSED BNSF
WAYZATA SUB TRACK
(BNSF WAYZATA SUB TRK 2)

℄ FUTURE BNSF
WAYZATA SUB TRACK
(BNSF WAYZATA SUB TRK 1)

1158 SB
STA. 2934+20.00
67' LT. OF ℄ TRACK 2

ST-3
STA. 7+42
40' LT. OF ℄ CSAH 40

ST-4
STA. 8+80
26' LT. OF ℄ CSAH 40

℄ TRACK 2
(EB-TRK-E4)
& WORKING LINE

℄ TRACK 1
(WB-TRK-E4)

1204 SB
STA. 2938+42.29
3' LT. OF ℄ TRACK 2

1008 SB
STA. 2940+00.01
34' LT. OF ℄ TRACK 2

ST-1
STA. 6+40
33' RT. OF ℄ CSAH 40

TEST PILE 1
TEST PILE 2
TEST PILE 3
TEST PILE 4
TEST PILE 5
TEST PILE 6
TEST PILE 7
TEST PILE 8
TEST PILE 9
TEST PILE 10
TEST PILE 11

℄ BRG.
S. ABUT.

℄ BRG.
N. ABUT.

℄ PIER 1
℄ PIER 2
℄ PIER 3
℄ PIER 4
℄ PIER 5
℄ PIER 6
℄ PIER 7
℄ PIER 8
℄ PIER 9

1163 CW
STA. 2931+02.36
20' LT. OF ℄ TRACK 2

1164 CW
STA. 2932+01.73
18' LT. OF ℄ TRACK 2

1165 CW
STA. 2933+03.26
16' LT. OF ℄ TRACK 2

1136 SW
STA. 2934+01.93
11' LT. OF ℄ TRACK 2

ST-5
STA. 7+66
51' RT. OF ℄ CSAH 40

ST-6
STA. 9+35
17' LT. OF ℄ CSAH 40

1021 SB
STA. 2936+86.00
74' RT. OF ℄ TRACK 2

1159 SB
STA. 2936+21.27
77' RT. OF ℄ TRACK 2

ST-2
STA. 8+94
66' RT. OF ℄ CSAH 40

ST-2A
STA. 8+97
66' RT. OF ℄ CSAH 40

BASSETT
CREEK TUNNEL

NOTES:

THE SUBSURFACE UTILITY INFORMATION IN THIS PLAN IS UTILITY QUALITY LEVEL D. THIS UTILITY QUALITY LEVEL WAS DETERMINED ACCORDING TO THE GUIDELINES OF CI/ASCE 38-02, ENTITLED "STANDARD GUIDELINES FOR THE COLLECTION AND DEPICTION OF EXISTING SUBSURFACE UTILITY DATA."

EXISTING UTILITIES WILL BE RELOCATED BY OTHERS.

NO.	DATE	BY	CHECK	DESIGN	REVISION / SUBMITTAL

DESIGNED BY: KAE | CHECKED BY: EJT
DRAWN BY: LMT | CHECKED BY: EJT

AECOM Kimley»Horn

90% SUBMISSION - 01/22/16

METROPOLITAN COUNCIL

SOUTHWEST Green Line LRT Extension

CIVIL - VOLUME 4G
LRT OVER BNSF
BRIDGE R0697
BRIDGE SURVEY PLAN

DISCIPLINE: STRUCTURES

SHEET NAME: CBRR0697-BRG-BOR-001-1

SHEET 108 OF 118

Jan, 18 2016 01:53 pm V:\3400_ADC\CAD\SEGMENT E4\PLAN SHEETS\STRUCTURES\R0697\CBRR0697-BRG-BOR-001.dwg By: lisa.thompson

PVI STA: 2932+50.00
PVI ELEV: 849.58
AD: −4.200
r: −1.00
420.00' VC

PROFILE GRADE
TOP OF RAIL @
℄ TRACK 2
(FG-EB-TRK-E4)

℄ BRG.
S. ABUT.

℄ PIER 1

℄ PIER 2

EXISTING
GROUND LINE

1163 CW
Elevation 821.2

1164 CW
Elevation 821.0

1165 CW
Elevation 821.5

Pore Pressure (psi) 0 40 80 120 160
Tip Resistance (psi) 0 1600 3200 4800 6400 8000
Friction Ratio (%) 0 2 4 6 8 10

EL. 810.00

EL. 808.50

EL. 808.50

EL. 808.50

12" C-I-P
TEST PILE
90 FEET LONG

HP12x53
TEST PILE
75 FEET LONG

HP12x53
TEST PILE
65 FEET LONG

EL. 721.2

APPROX. TIP
EL. 720.00

APPROX. TIP
EL. 733.50

EL. 738.5

APPROX. TIP
EL. 743.50

EL. 748.4

NOTES:

THE MATERIAL DESCRIPTIONS ARE CLASSIFIED ACCORDING TO THE UNIFIED SOIL CLASSIFICATION SYSTEM. DETAILS ON THE SYSTEM CAN BE FOUND IN THE FADR AND IN ASTM:D2488. THE SOIL GROUP CATEGORY PER THE AASHTO SOIL CLASSIFICATION SYSTEM IS ALSO SHOWN.

2931+00 2932+00 2933+00

NO.	DATE	BY	CHECK	DESIGN	REVISION / SUBMITTAL

DESIGNED BY: KAE CHECKED BY: EJT
DRAWN BY: LMT CHECKED BY: EJT

AECOM Kimley»Horn

90% SUBMISSION - 01/22/16

METROPOLITAN COUNCIL

SOUTHWEST Green Line LRT Extension

CIVIL - VOLUME 4G
LRT OVER BNSF
BRIDGE R0697
BRIDGE SURVEY PROFILE 1

DISCIPLINE: STRUCTURES
SHEET NAME: CBRR0697-BRG-BOR-002-1

SHEET 109 OF 118

Jan, 18 2016 01:54 pm V:\3400_ADC\CAD\SEGMENT E4\PLAN SHEETS\STRUCTURES\R0697\CBRR0697-BRG-BOR-002.dwg By: lisa.thompson

PVI STA: 2932+50.00
PVI ELEV: 849.58
AD: −4.200
r: −1.00
420.00' VC

PROFILE GRADE
TOP OF RAIL @
℄ TRACK 2
(FG−EB−TRK−E4)

EVCS: 2934+60.00
EVCE: 850.73

℄ PIER 2 — EL. 808.50

℄ PIER 3 — EL. 808.50

℄ PIER 4 — EL. 809.00

℄ PIER 5 — EL. 809.00

0.55%

EXISTING
GROUND LINE

1158 SB
Elevation 847.3

1136 SW
Elevation 821.3

HP12x53
TEST PILE
55 FEET LONG

HP12x53
TEST PILE
50 FEET LONG

HP12x53
TEST PILE
50 FEET LONG

APPROX. TIP
EL. 753.50

APPROX. TIP
EL. 759.00

APPROX. TIP
EL. 759.00

EL. 752.1

EL. 722.6

	N60	Coh
11.5" Bituminous pavement	*	
Sand with silt and gravel, apparent cobbles, pieces of brick around 20', brown, a little dark brown (A−1−b) fill	27 38 21 27 33 29 50/.4	
Gravelly sand with silt, a little fat clay brown (A−1−b, A−7−6) fill	27 20 17 9	7 8
LEAN CLAY, gray and brown mottled, a little brown, soft (CL/CH) (A−7−6) alluvium	16	3
FAT CLAY, brownish gray, a little gray and brown mottled, lenses of waterbearing sand below 33½', laminations of silt (CH) (A−7−6) alluvium	17	1375 7
Sand, a little gravel, light brown and light grayish brown (A−1−b, A−3) fill	16	
FAT CLAY, grayish brown to dark brownish gray, a little light brownish gray, firm to soft, laminations of silt (CH) (A−7−6) alluvium	24	580 3
SAND WITH SILT, fine grained, brown to brownish gray, moist, medium dense, a lens of clayey sand (SP−SM) (A−3) alluvium	17 9	1080 2 24
FAT CLAY, brownish gray to brown, a little dark brownish gray, stiff, laminations of silt (CH) (A−7−6) alluvium	18	1615 17
SAND, medium to fine grained, brown, waterbearing, dense (SP) (A−1−b) alluvium	16	33
SAND, a little gravel, medium grained, brown, waterbearing, dense (SP) (A−1−b) alluvium	14	1395 33
SANDY LEAN CLAY, a little gravel, brown and gray mottled to brown to brownish gray, stiff to hard (CL) (A−6) till	34	1790
SAND WITH GRAVEL, medium grained, brown, waterbearing, medium dense (SP) (A−1−b) alluvium	16	1705 22
CLAYEY SAND, a little gravel, brown to brown and gray mottled, very stiff (SC) (A−6) till		14
FAT CLAY, dark gray and brownish gray mottled, stiff (CH) (A−7−6) alluvium	12	11
SANDY LEAN CLAY, a little gravel, dark gray, stiff (CL) (A−6) till		11
SAND WITH SILT, fine grained, brown and light gray, waterbearing, medium dense (SP−SM) (A−3) alluvium	23	
SANDY LEAN CLAY, a little gravel, brown, very stiff (CL) (A−6) till		18
SAND, fine grained, light gray, waterbearing, dense (SP) (A−3) alluvium	35	
SAND WITH SILT, a little gravel, fine to medium grained, grayish brown, waterbearing, very dense (SP−SM) (A−3) alluvium	62	11
CLAYEY SAND, a little gravel, brown, stiff to very stiff (SC) (A−6) till		19 23
Top of Bedrock		
SANDSTONE, weathered to fresh, light gray	*	
END OF BORING	100/.2	
SANDY LEAN CLAY, a little gravel, dark brownish gray, stiff, a lamination of waterbearing fine grained sand (CL) (A−6) till		17 13
SAND WITH SILT, a little gravel, fine to medium grained, brown, waterbearing, medium dense (SP−SM) (A−1−b) alluvium		15
GRAVEL WITH SILT AND SAND, possible cobbles/ boulders around 112½', brown, waterbearing, very dense (GP−GM) alluvium or colluvium		60
Top of Bedrock		
SANDSTONE, fresh, light gray and gray		100/.3
END OF BORING		100/.2

* 4/.5 + 75/.5

* 8/.5 + 13/.5

2933+00 2934+00 2935+00

880 870 860 850 840 830 820 810 800 790 780 770 760 750 740 730 720 710

NOTES:

THE MATERIAL DESCRIPTIONS ARE CLASSIFIED ACCORDING TO THE UNIFIED SOIL CLASSIFICATION SYSTEM. DETAILS ON THE SYSTEM CAN BE FOUND IN THE FADR AND IN ASTM:D2488. THE SOIL GROUP CATEGORY PER THE AASHTO SOIL CLASSIFICATION SYSTEM IS ALSO SHOWN.

NO.	DATE	BY	CHECK	DESIGN	REVISION / SUBMITTAL

DESIGNED BY: KAE CHECKED BY: EJT
DRAWN BY: LMT CHECKED BY: EJT

AECOM Kimley»Horn

90% SUBMISSION - 01/22/16

METROPOLITAN COUNCIL

SOUTHWEST Green Line LRT Extension

CIVIL - VOLUME 4G
LRT OVER BNSF
BRIDGE R0697
BRIDGE SURVEY PROFILE 2

DISCIPLINE: STRUCTURES
SHEET NAME: CBRR0697-BRG-BOR-002-2

SHEET 110 OF 118

Jan. 18 2016 01:54 pm V:\3400_ADC\CAD\SEGMENT E4\PLAN SHEETS\STRUCTURES\R0697\CBRR0697-BRG-BOR-002.dwg By: lisa.thompson

PROFILE GRADE
TOP OF RAIL @
℄ TRACK 2
(FG-EB-TRK-E4)

℄ PIER 5

℄ PIER 6

℄ PIER 7

℄ PIER 8

1159 SB
Elevation 848.2

1021 SB
Elevation 846.5

0.55%

EXISTING
GROUND LINE

EL. 809.00

EL. 809.00

EL. 809.00

EL. 809.00

HP12x53
TEST PILE
50 FEET LONG

HP12x53
TEST PILE
45 FEET LONG

HP12x53
TEST PILE
45 FEET LONG

HP12x53
TEST PILE
50 FEET LONG

APPROX. TIP
EL. 759.00

APPROX. TIP
EL. 764.00

APPROX. TIP
EL. 764.00

APPROX. TIP
EL. 759.00

N60	Coh	Material
	*	12" Bituminous pavement Silty sand with gravel, dark brown (A-1-b) fill *13/.5 + 30/.5
24		
41		
33		Mixture of sand with silt and silty sand, with gravel, possible cobbles from 3" to 4½", pieces of brick around 18", brown and dark brown (A-1-b) fill
38		
18		
27		
24		
15		Mixture of sand with silt, clayey sand and sand, with gravel, dark brown and light brown, a little brownish gray (A-1-b) fill
9		
6		
5		FAT CLAY, gray and dark brownish gray mottled, firm to stiff (CH) (A-7-6) alluvium
13		
43		GRAVEL WITH SILT AND SAND, brown, moist, dense (GP-GM) (A-1-b) alluvium
36		SILT, brown, a little light grayish brown, moist, dense, lenses and laminations of sand (ML) (A-4) alluvium
25		
55		GRAVELLY SAND, medium to coarse grained, brown, moist, medium dense (SP) (A-1-b) alluvium
**		SILT WITH SAND, brown, a little gray, moist, very dense, lenses of sand with silt, laminations of fat clay (ML) (A-4) alluvium
146		
59		GRAVELLY SAND, possible cobbles, medium grained, brown, moist, very dense (SP) (A-1-b) alluvium
***		SILTY SAND WITH GRAVEL, fine to medium grained, brown, moist, very dense (SP) (A-1-b) alluvium or till
100/.4		SAND WITH SILT AND GRAVEL, fine grained, brown, a little dark brown, light brown and gray, moist, very dense, laminations of sandy lean clay and lean clay (SP-SM) (A-1-b) alluvium
		SANDY SHALE, weathered, light brown and gray
		SANDSTONE, weathered to fresh, light gray, a little brown to light tan, a little brown
		END OF BORING

EL. 788.3

* 13/.5 + 30/.5
** 11/.5 + 71/.5 + 100/.4
*** 72/.5 + 100/.25

N60	Coh	Material
	*	11.5" Bituminous pavement
27		Sand with silt and gravel, pieces of concrete and wood (A-1-b) fill
35		Sand with silt, a little gravel, pieces of concrete, brown (A-1-b) fill
26		
25		Sand with silt, a little gravel and clayey sand, a piece of wood around 15', brown, a little black (A-1-b) fill
18		
25		
25		
9		Sand with gravel, light brown (A-1-b) fill
8		
6		Mixture of organic clay and clayey sand, pieces of brick and glass, trace roots, black and brown (A-6) fill
5		LEAN CLAY, brown and gray mottled, a little brown, firm, laminations of sand (CL) (A-7-6) alluvium
760		
10		FAT CLAY, dark grayish brown, a little light grayish brown, laminations of silt (CH) (A-7-6) alluvium
1140		FAT CLAY, gray to grayish brown, a little light grayish brown, stiff to very stiff, laminations of silt (CH) (A-7-6) alluvium
19		SAND WITH SILT, a little gravel, brown, a little grayish brown, moist, medium dense, lenses of clayey sand (SM) (A-2-4) alluvium
15		
53		SILTY SAND WITH GRAVEL, fine to medium grained, brown, a little light brown, moist, medium dense, a lens of sand (SM) (A-2-4) alluvium
**		
70		GRAVELLY SAND WITH SILT, fine to medium grained, brown, moist, very dense (SP-SM) (A-1-b) alluvium
100/.1		SAND WITH SILT AND GRAVEL, fine to medium grained, light brown, moist, very dense (SP-SM) (A-1-b) alluvium
		Top of Bedrock
		DOLOSTONE, weathered, light brown
		END OF BORING - HSA Obstructed

EL. 796.5

* 10/.5 + 13/.5
** 4/.5 + 75/.5 + 50/.1

2935+00

2936+00

2937+00

NOTES:

THE MATERIAL DESCRIPTIONS ARE CLASSIFIED ACCORDING TO THE UNIFIED SOIL CLASSIFICATION SYSTEM. DETAILS ON THE SYSTEM CAN BE FOUND IN THE FADR AND IN ASTM:D2488. THE SOIL GROUP CATEGORY PER THE AASHTO SOIL CLASSIFICATION SYSTEM IS ALSO SHOWN.

NO.	DATE	BY	CHECK	DESIGN	REVISION / SUBMITTAL

DESIGNED BY: KAE | CHECKED BY: EJT
DRAWN BY: LMT | CHECKED BY: EJT

AECOM Kimley»Horn

90% SUBMISSION - 01/22/16

METROPOLITAN COUNCIL

SOUTHWEST Green Line LRT Extension

CIVIL - VOLUME 4G
LRT OVER BNSF
BRIDGE R0697
BRIDGE SURVEY PROFILE 3

DISCIPLINE: STRUCTURES

SHEET NAME: CBRR0697-BRG-BOR-002-3

SHEET 111 OF 118

Jan. 18 2016 01:54 pm V:\3400_ADC\CAD\SEGMENT E4\PLAN SHEETS\STRUCTURES\R0697\CBRR0697-BRG-BOR-002.dwg By: lisa.thompson

PVI STA: 2939+24.59
PVI ELEV: 853.29
AD: −3.050
r: −1.53
200.00' VC

PROFILE GRADE
TOP OF RAIL @
℄ TRACK 2
(FG-EB-TRK-E4)

℄ PIER 9

℄ BRG.
N. ABUT.

BVCS: 2938+24.59
BVCE: 852.74

EVCS: 2940+24.59
EVCE: 850.79

0.55%

−2.50%

EXISTING
GROUND LINE

EL. 810.00

EL. 807.00

HP14x73
TEST PILE
65 FEET LONG

HP14x73
TEST PILE
65 FEET LONG

APPROX. TIP
EL. 745.00

APPROX. TIP
EL. 745.00

EL. 756.6

EL. 730.2

1204 SB
Elevation 821.5

Coh	N60	
	21	Gravel with clay and sand, dark brown (A-1-b) fill
	9	
	11	
980	11	
1830	9	FAT CLAY, grayish brown, a little light grayish brown, brown and gray, mottled and brownish gray, stiff, laminations of silt (CH) (A-7-6) alluvium
1295	13	
1730	9	
	11	
1380 ▼	14	
1850	15	
	16	LEAN CLAY, grayish brown, a little brown and light grayish brown, very stiff, laminations of sand and silt (CL/CH) (A-7-6) alluvium
	20	CLAYEY SAND, grayish brown, very stiff (SC) (A-2-6) alluvium
	25	GRAVELLY SAND, medium to coarse grained, brown, waterbearing, medium dense (SP) (A-1-b) alluvium
	24	SAND WITH GRAVEL, medium to fine grained, brown, waterbearing, medium dense (SP) (A-1-b) alluvium
	89	SANDY LEAN CLAY, a little gravel, brownish gray, hard (CL) (A-6) till
	100	GRAVELLY SAND, medium to fine grained, brown, waterbearing, very dense, lenses of clayey sand (SP) (A-1-b) alluvium
	100/.4	Top of Bedrock SANDSTONE, weathered to fresh, light gray to light brown END OF BORING

1008 SB
Elevation 849.8

Coh	N60	
	5	
	9	Clayey sand, a little gravel, sandy lean clay, silty sand and sand, pieces of concrete, brick, bituminous and mortar, trace roots, dark brown, a little black, brown and light gray (A-6) fill
	21	
	13	
	14	
	16	
	9	Mixture of sand with silt and sand, a little gravel, brown and grayish brown (A-3, A-1-b) fill
	7	
	8	
	15	SAND WITH SILT, fine to medium grained, grayish brown, a little brown, moist, loose (SP-SM) (A-3) alluvium or fill
	11	SAND, a little gravel, medium to fine grained, light brown, a little brown, moist, medium dense (SP) (A-1-b) alluvium or fill
	12	
1670	11	LEAN CLAY, brownish gray, a little grayish brown and gray, stiff (CL) (A-7-6) alluvium
1950	10	LEAN CLAY, brownish gray, lenses and laminations of silty sand (CL) (A-7-6) alluvium
1840	12	LEAN CLAY, dark brownish gray, a little brownish gray and brown, stiff, laminations of silt and silty sand (CL) (A-7-6) alluvium
2560	15	FAT CLAY, brownish gray, a little light brown (CH/CL) (A-7-6) alluvium
1200	14	
	13	FAT CLAY, dark brownish gray to dark grayish brown, a little light tan and gray, stiff, laminations of silt (CH) (A-7-6) alluvium
	15	
	18	SANDY LEAN CLAY, a little gravel, brownish gray, stiff (CL) (A-6) till
	19	LEAN CLAY WITH SAND, brownish gray, very stiff (CL) (A-6) till
	23	CLAYEY SAND WITH GRAVEL, grayish brown, very stiff (SC) (A-6) till
▼	14	
	16	SANDY LEAN CLAY, grayish brown, very stiff (CL) (A-6) till
	44	LEAN CLAY, grayish brown, stiff to very stiff (CL) (A-6) alluvium
	25	
		SILTY SAND, possible cobbles, fine to medium grained, grayish brown, wet, dense (SM) (A-2-4) alluvium
		GRAVEL WITH SAND, gray, waterbearing (GP) (A-1-b) till or colluvium
	50/.4	CLAYEY SAND, a little gravel, apparent cobbles, grayish brown, very stiff (SC) (A-6) till and colluvium Top of Bedrock
	60/.1	SANDSTONE, weathered to fresh, light gray
		END OF BORING

NOTES:

THE MATERIAL DESCRIPTIONS ARE CLASSIFIED ACCORDING TO THE UNIFIED SOIL CLASSIFICATION SYSTEM. DETAILS ON THE SYSTEM CAN BE FOUND IN THE FADR AND IN ASTM:D2488. THE SOIL GROUP CATEGORY PER THE AASHTO SOIL CLASSIFICATION SYSTEM IS ALSO SHOWN.

880 870 860 850 840 830 820 810 800 790 780 770 760 750 740 730 720 710

2938+00 2939+00 2940+00

NO.	DATE	BY	CHECK	DESIGN	REVISION / SUBMITTAL

DESIGNED BY: KAE CHECKED BY: EJT
DRAWN BY: LMT CHECKED BY: EJT

AECOM Kimley»Horn

90% SUBMISSION - 01/22/16

METROPOLITAN COUNCIL

SOUTHWEST Green Line LRT Extension

CIVIL - VOLUME 4G
LRT OVER BNSF
BRIDGE R0697
BRIDGE SURVEY PROFILE 4

DISCIPLINE: STRUCTURES
SHEET NAME: CBRR0697-BRG-BOR-002-4

SHEET 112 OF 118

Jan, 18 2016 01:55 pm V:\3400_ADC\CAD\SEGMENT E4\PLAN SHEETS\STRUCTURES\R0697\CBRR0697-BRG-BOR-002.dwg By: lisa.thompson

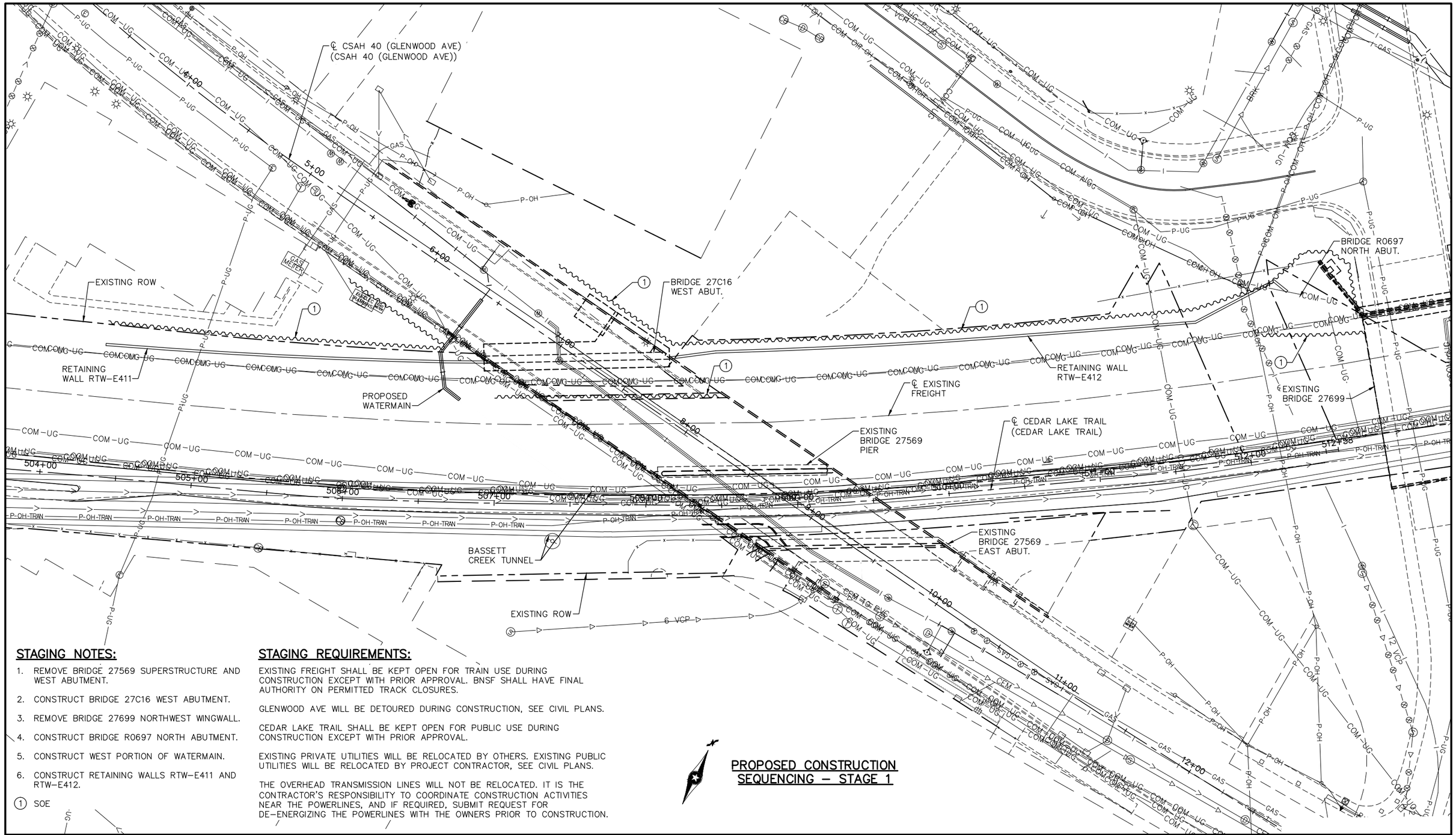

STAGING NOTES:

1. REMOVE BRIDGE 27569 SUPERSTRUCTURE AND WEST ABUTMENT.
2. CONSTRUCT BRIDGE 27C16 WEST ABUTMENT.
3. REMOVE BRIDGE 27699 NORTHWEST WINGWALL.
4. CONSTRUCT BRIDGE R0697 NORTH ABUTMENT.
5. CONSTRUCT WEST PORTION OF WATERMAIN.
6. CONSTRUCT RETAINING WALLS RTW–E411 AND RTW–E412.

(1) SOE

STAGING REQUIREMENTS:

EXISTING FREIGHT SHALL BE KEPT OPEN FOR TRAIN USE DURING CONSTRUCTION EXCEPT WITH PRIOR APPROVAL. BNSF SHALL HAVE FINAL AUTHORITY ON PERMITTED TRACK CLOSURES.

GLENWOOD AVE WILL BE DETOURED DURING CONSTRUCTION, SEE CIVIL PLANS.

CEDAR LAKE TRAIL SHALL BE KEPT OPEN FOR PUBLIC USE DURING CONSTRUCTION EXCEPT WITH PRIOR APPROVAL.

EXISTING PRIVATE UTILITIES WILL BE RELOCATED BY OTHERS. EXISTING PUBLIC UTILITIES WILL BE RELOCATED BY PROJECT CONTRACTOR, SEE CIVIL PLANS.

THE OVERHEAD TRANSMISSION LINES WILL NOT BE RELOCATED. IT IS THE CONTRACTOR'S RESPONSIBILITY TO COORDINATE CONSTRUCTION ACTIVITIES NEAR THE POWERLINES, AND IF REQUIRED, SUBMIT REQUEST FOR DE–ENERGIZING THE POWERLINES WITH THE OWNERS PRIOR TO CONSTRUCTION.

PROPOSED CONSTRUCTION SEQUENCING – STAGE 1

NO.	DATE	BY	CHECK	DESIGN	REVISION / SUBMITTAL

DESIGNED BY: BAW | CHECKED BY: EJT
DRAWN BY: LMT | CHECKED BY: EJT

AECOM Kimley»Horn

90% SUBMISSION - 01/22/16

METROPOLITAN COUNCIL

SOUTHWEST Green Line LRT Extension

CIVIL - VOLUME 4G
LRT OVER BNSF
BRIDGE R0697
STAGING PLAN 1

DISCIPLINE: STRUCTURES

SHEET NAME: CBRR0697-BRG-STG-001-1

SHEET 113 OF 118

Jan, 18 2016 01:56 pm V:\3400_ADC\CAD\SEGMENT E4\PLAN SHEETS\STRUCTURES\R0697\CBRR0697-BRG-STG-001.dwg By: lisa.thompson

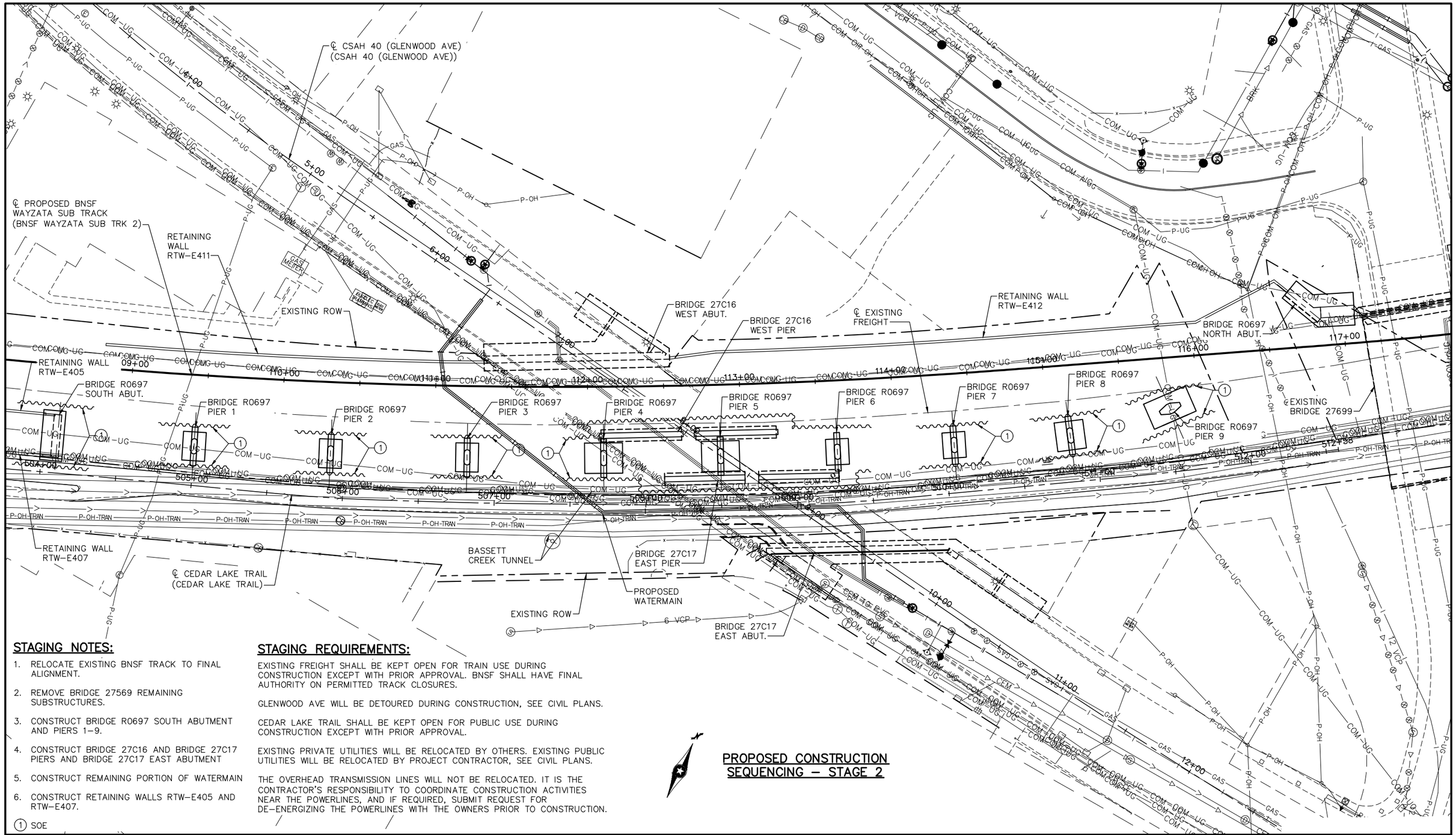

STAGING NOTES:

1. RELOCATE EXISTING BNSF TRACK TO FINAL ALIGNMENT.
2. REMOVE BRIDGE 27569 REMAINING SUBSTRUCTURES.
3. CONSTRUCT BRIDGE R0697 SOUTH ABUTMENT AND PIERS 1–9.
4. CONSTRUCT BRIDGE 27C16 AND BRIDGE 27C17 PIERS AND BRIDGE 27C17 EAST ABUTMENT
5. CONSTRUCT REMAINING PORTION OF WATERMAIN
6. CONSTRUCT RETAINING WALLS RTW–E405 AND RTW–E407.

(1) SOE

STAGING REQUIREMENTS:

EXISTING FREIGHT SHALL BE KEPT OPEN FOR TRAIN USE DURING CONSTRUCTION EXCEPT WITH PRIOR APPROVAL. BNSF SHALL HAVE FINAL AUTHORITY ON PERMITTED TRACK CLOSURES.

GLENWOOD AVE WILL BE DETOURED DURING CONSTRUCTION, SEE CIVIL PLANS.

CEDAR LAKE TRAIL SHALL BE KEPT OPEN FOR PUBLIC USE DURING CONSTRUCTION EXCEPT WITH PRIOR APPROVAL.

EXISTING PRIVATE UTILITIES WILL BE RELOCATED BY OTHERS. EXISTING PUBLIC UTILITIES WILL BE RELOCATED BY PROJECT CONTRACTOR, SEE CIVIL PLANS.

THE OVERHEAD TRANSMISSION LINES WILL NOT BE RELOCATED. IT IS THE CONTRACTOR'S RESPONSIBILITY TO COORDINATE CONSTRUCTION ACTIVITIES NEAR THE POWERLINES, AND IF REQUIRED, SUBMIT REQUEST FOR DE–ENERGIZING THE POWERLINES WITH THE OWNERS PRIOR TO CONSTRUCTION.

PROPOSED CONSTRUCTION SEQUENCING – STAGE 2

NO.	DATE	BY	CHECK	DESIGN	REVISION / SUBMITTAL

DESIGNED BY: BAW | CHECKED BY: EJT
DRAWN BY: LMT | CHECKED BY: EJT

AECOM Kimley»Horn

90% SUBMISSION - 1/22/16

METROPOLITAN COUNCIL

SOUTHWEST Green Line LRT Extension

CIVIL - VOLUME 4G
LRT OVER BNSF
BRIDGE R0697
STAGING PLAN 2

DISCIPLINE: STRUCTURES

SHEET NAME: CBRR0697-BRG-STG-001-2

SHEET 114 OF 118

Jan, 18 2016 01:56 pm V:\3400_ADC\CAD\SEGMENT E4\PLAN SHEETS\STRUCTURES\R0697\CBRR0697-BRG-STG-001.dwg By: lisa.thompson

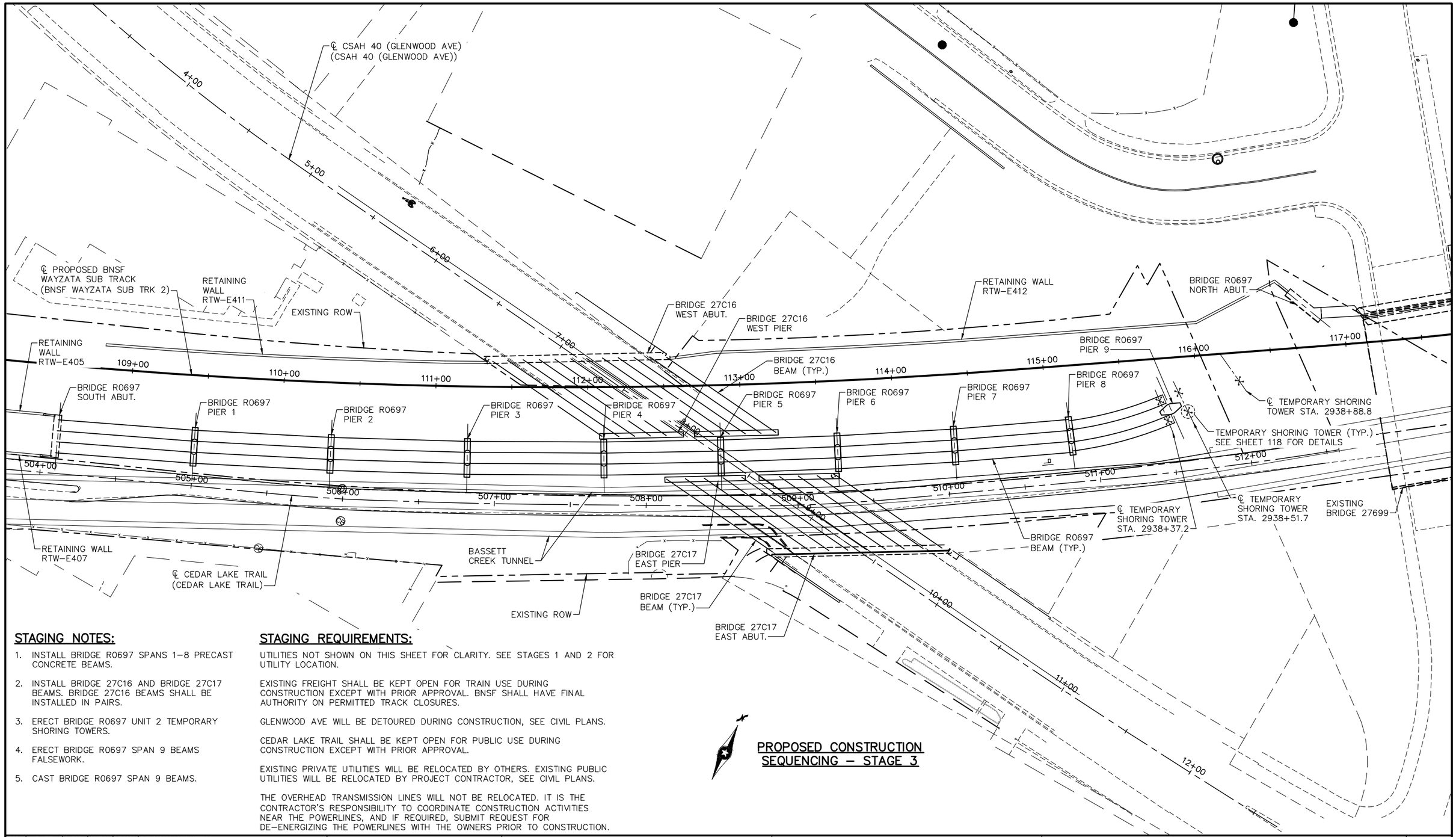

STAGING NOTES:

1. INSTALL BRIDGE R0697 SPANS 1–8 PRECAST CONCRETE BEAMS.
2. INSTALL BRIDGE 27C16 AND BRIDGE 27C17 BEAMS. BRIDGE 27C16 BEAMS SHALL BE INSTALLED IN PAIRS.
3. ERECT BRIDGE R0697 UNIT 2 TEMPORARY SHORING TOWERS.
4. ERECT BRIDGE R0697 SPAN 9 BEAMS FALSEWORK.
5. CAST BRIDGE R0697 SPAN 9 BEAMS.

STAGING REQUIREMENTS:

UTILITIES NOT SHOWN ON THIS SHEET FOR CLARITY. SEE STAGES 1 AND 2 FOR UTILITY LOCATION.

EXISTING FREIGHT SHALL BE KEPT OPEN FOR TRAIN USE DURING CONSTRUCTION EXCEPT WITH PRIOR APPROVAL. BNSF SHALL HAVE FINAL AUTHORITY ON PERMITTED TRACK CLOSURES.

GLENWOOD AVE WILL BE DETOURED DURING CONSTRUCTION, SEE CIVIL PLANS.

CEDAR LAKE TRAIL SHALL BE KEPT OPEN FOR PUBLIC USE DURING CONSTRUCTION EXCEPT WITH PRIOR APPROVAL.

EXISTING PRIVATE UTILITIES WILL BE RELOCATED BY OTHERS. EXISTING PUBLIC UTILITIES WILL BE RELOCATED BY PROJECT CONTRACTOR, SEE CIVIL PLANS.

THE OVERHEAD TRANSMISSION LINES WILL NOT BE RELOCATED. IT IS THE CONTRACTOR'S RESPONSIBILITY TO COORDINATE CONSTRUCTION ACTIVITIES NEAR THE POWERLINES, AND IF REQUIRED, SUBMIT REQUEST FOR DE–ENERGIZING THE POWERLINES WITH THE OWNERS PRIOR TO CONSTRUCTION.

PROPOSED CONSTRUCTION SEQUENCING – STAGE 3

NO.	DATE	BY	CHECK	DESIGN	REVISION / SUBMITTAL

DESIGNED BY: BAW | CHECKED BY: EJT
DRAWN BY: LMT | CHECKED BY: EJT

AECOM Kimley»Horn

90% SUBMISSION - 1/22/16

METROPOLITAN COUNCIL

SOUTHWEST Green Line LRT Extension

CIVIL - VOLUME 4G
LRT OVER BNSF
BRIDGE R0697
STAGING PLAN 3

DISCIPLINE: STRUCTURES

SHEET NAME: CBRR0697-BRG-STG-001-3

SHEET 115 OF 118

Jan, 18 2016 01:57 pm V:\3400_ADC\CAD\SEGMENT E4\PLAN SHEETS\STRUCTURES\R0697\CBRR0697-BRG-STG-001.dwg By: lisa.thompson

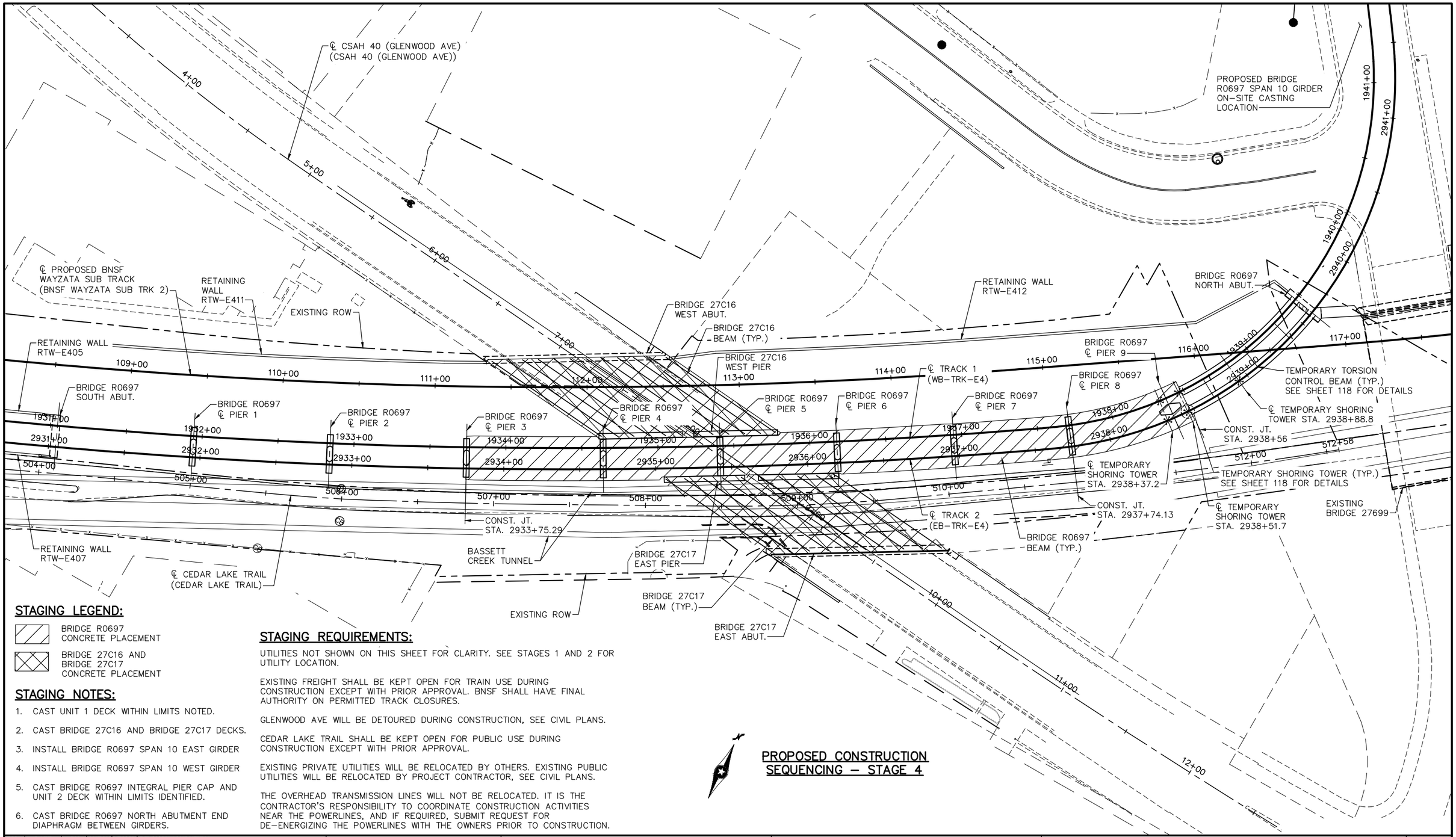

STAGING LEGEND:

BRIDGE R0697
CONCRETE PLACEMENT

BRIDGE 27C16 AND
BRIDGE 27C17
CONCRETE PLACEMENT

STAGING NOTES:

1. CAST UNIT 1 DECK WITHIN LIMITS NOTED.
2. CAST BRIDGE 27C16 AND BRIDGE 27C17 DECKS.
3. INSTALL BRIDGE R0697 SPAN 10 EAST GIRDER
4. INSTALL BRIDGE R0697 SPAN 10 WEST GIRDER
5. CAST BRIDGE R0697 INTEGRAL PIER CAP AND UNIT 2 DECK WITHIN LIMITS IDENTIFIED.
6. CAST BRIDGE R0697 NORTH ABUTMENT END DIAPHRAGM BETWEEN GIRDERS.

STAGING REQUIREMENTS:

UTILITIES NOT SHOWN ON THIS SHEET FOR CLARITY. SEE STAGES 1 AND 2 FOR UTILITY LOCATION.

EXISTING FREIGHT SHALL BE KEPT OPEN FOR TRAIN USE DURING CONSTRUCTION EXCEPT WITH PRIOR APPROVAL. BNSF SHALL HAVE FINAL AUTHORITY ON PERMITTED TRACK CLOSURES.

GLENWOOD AVE WILL BE DETOURED DURING CONSTRUCTION, SEE CIVIL PLANS.

CEDAR LAKE TRAIL SHALL BE KEPT OPEN FOR PUBLIC USE DURING CONSTRUCTION EXCEPT WITH PRIOR APPROVAL.

EXISTING PRIVATE UTILITIES WILL BE RELOCATED BY OTHERS. EXISTING PUBLIC UTILITIES WILL BE RELOCATED BY PROJECT CONTRACTOR, SEE CIVIL PLANS.

THE OVERHEAD TRANSMISSION LINES WILL NOT BE RELOCATED. IT IS THE CONTRACTOR'S RESPONSIBILITY TO COORDINATE CONSTRUCTION ACTIVITIES NEAR THE POWERLINES, AND IF REQUIRED, SUBMIT REQUEST FOR DE–ENERGIZING THE POWERLINES WITH THE OWNERS PRIOR TO CONSTRUCTION.

PROPOSED CONSTRUCTION SEQUENCING – STAGE 4

NO.	DATE	BY	CHECK	DESIGN	REVISION / SUBMITTAL

DESIGNED BY: BAW | CHECKED BY: EJT
DRAWN BY: LMT | CHECKED BY: EJT

AECOM Kimley»Horn

90% SUBMISSION - 1/22/16

METROPOLITAN COUNCIL

SOUTHWEST Green Line LRT Extension

CIVIL - VOLUME 4G
LRT OVER BNSF
BRIDGE R0697
STAGING PLAN 4

DISCIPLINE: STRUCTURES

SHEET NAME: CBRR0697-BRG-STG-001-4

SHEET 116 OF 118

Jan, 18 2016 01:57 pm V:\3400_ADC\CAD\SEGMENT E4\PLAN SHEETS\STRUCTURES\R0697\CBRR0697-BRG-STG-001.dwg By: lisa.thompson

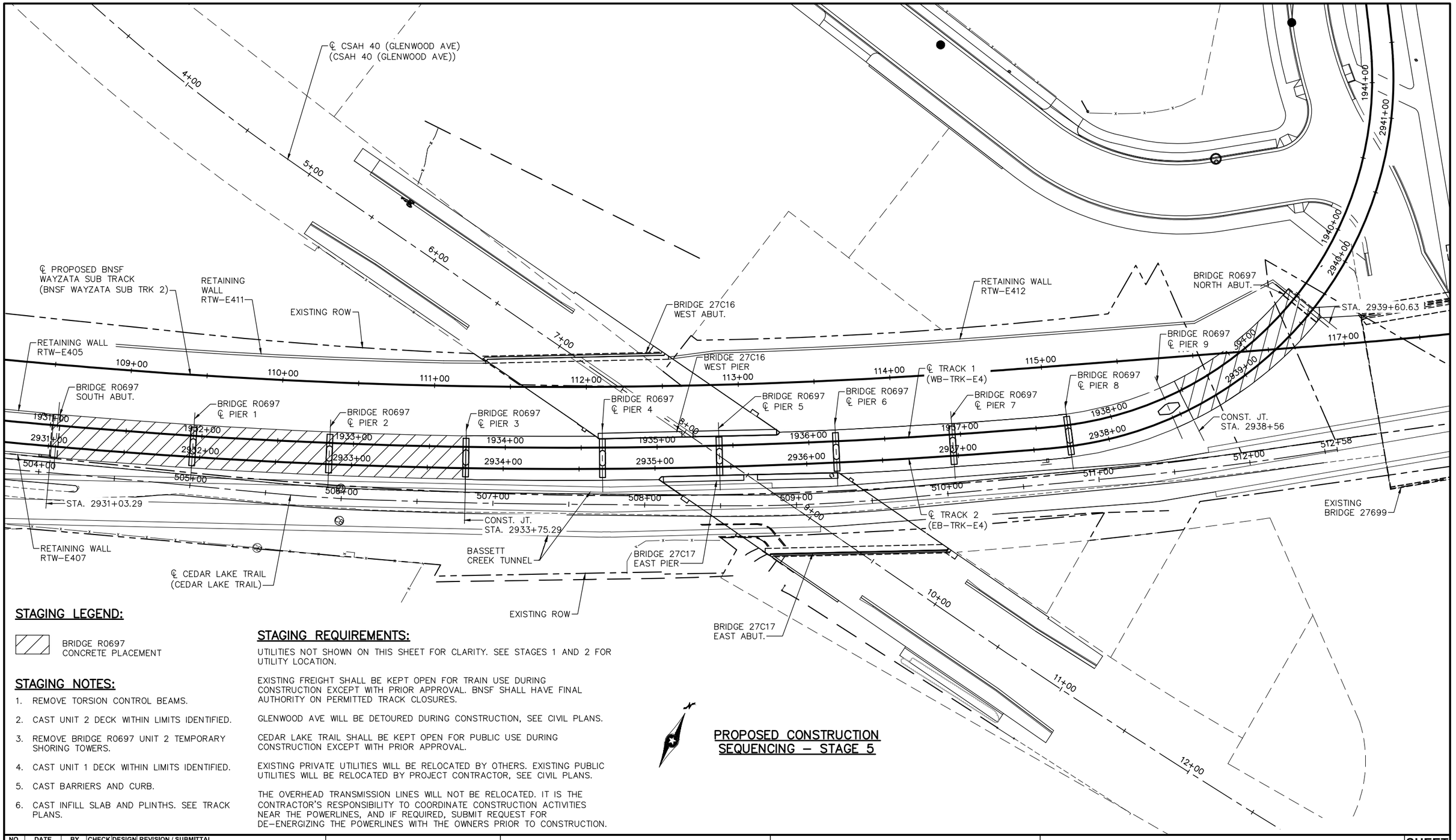

STAGING LEGEND:

BRIDGE R0697 CONCRETE PLACEMENT

STAGING NOTES:

1. REMOVE TORSION CONTROL BEAMS.
2. CAST UNIT 2 DECK WITHIN LIMITS IDENTIFIED.
3. REMOVE BRIDGE R0697 UNIT 2 TEMPORARY SHORING TOWERS.
4. CAST UNIT 1 DECK WITHIN LIMITS IDENTIFIED.
5. CAST BARRIERS AND CURB.
6. CAST INFILL SLAB AND PLINTHS. SEE TRACK PLANS.

STAGING REQUIREMENTS:

UTILITIES NOT SHOWN ON THIS SHEET FOR CLARITY. SEE STAGES 1 AND 2 FOR UTILITY LOCATION.

EXISTING FREIGHT SHALL BE KEPT OPEN FOR TRAIN USE DURING CONSTRUCTION EXCEPT WITH PRIOR APPROVAL. BNSF SHALL HAVE FINAL AUTHORITY ON PERMITTED TRACK CLOSURES.

GLENWOOD AVE WILL BE DETOURED DURING CONSTRUCTION, SEE CIVIL PLANS.

CEDAR LAKE TRAIL SHALL BE KEPT OPEN FOR PUBLIC USE DURING CONSTRUCTION EXCEPT WITH PRIOR APPROVAL.

EXISTING PRIVATE UTILITIES WILL BE RELOCATED BY OTHERS. EXISTING PUBLIC UTILITIES WILL BE RELOCATED BY PROJECT CONTRACTOR, SEE CIVIL PLANS.

THE OVERHEAD TRANSMISSION LINES WILL NOT BE RELOCATED. IT IS THE CONTRACTOR'S RESPONSIBILITY TO COORDINATE CONSTRUCTION ACTIVITIES NEAR THE POWERLINES, AND IF REQUIRED, SUBMIT REQUEST FOR DE-ENERGIZING THE POWERLINES WITH THE OWNERS PRIOR TO CONSTRUCTION.

PROPOSED CONSTRUCTION SEQUENCING – STAGE 5

NO.	DATE	BY	CHECK	DESIGN	REVISION / SUBMITTAL

DESIGNED BY: BAW CHECKED BY: EJT
DRAWN BY: LMT CHECKED BY: EJT

AECOM Kimley»Horn

90% SUBMISSION - 1/22/16

METROPOLITAN COUNCIL

SOUTHWEST Green Line LRT Extension

CIVIL - VOLUME 4G
LRT OVER BNSF
BRIDGE R0697
STAGING PLAN 5

DISCIPLINE: STRUCTURES

SHEET NAME: CBRR0697-BRG-STG-001-5

SHEET 117 OF 118

Jan, 18 2016 01:57 pm V:\3400_ADC\CAD\SEGMENT E4\PLAN SHEETS\STRUCTURES\R0697\CBRR0697-BRG-STG-001.dwg By: lisa.thompson

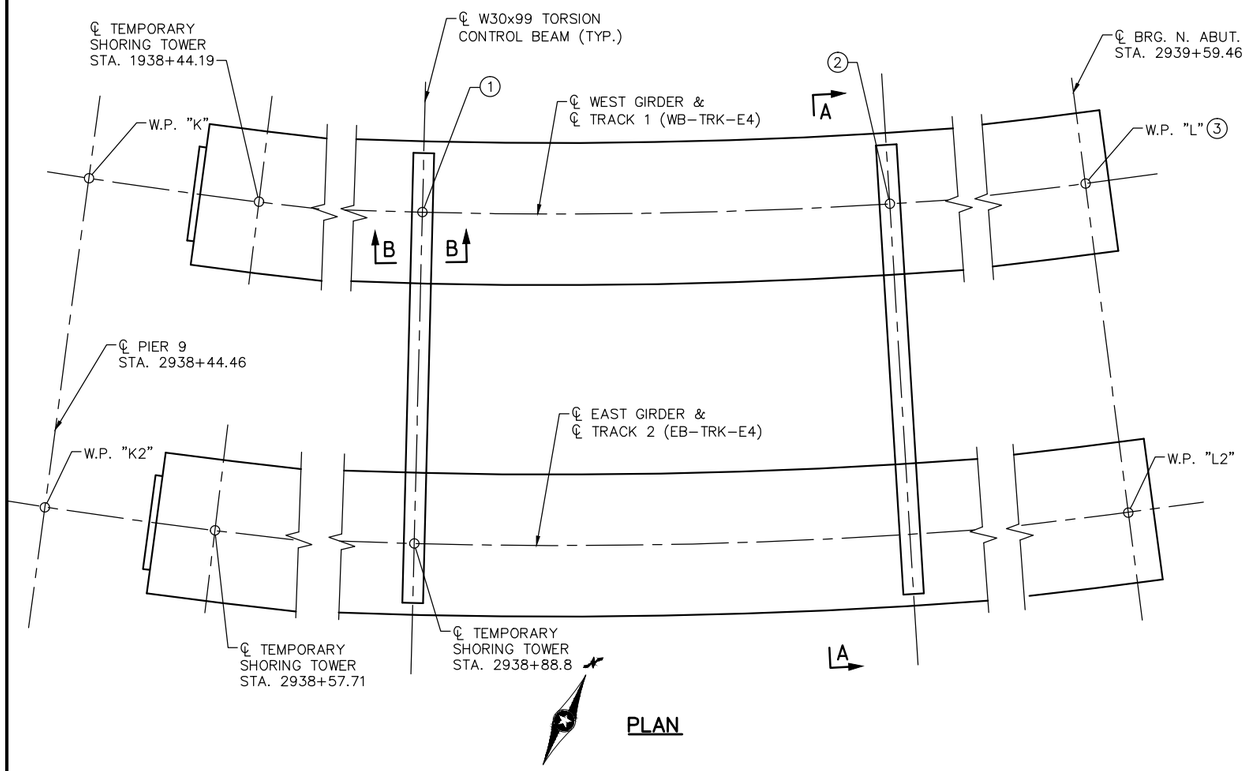

PLAN

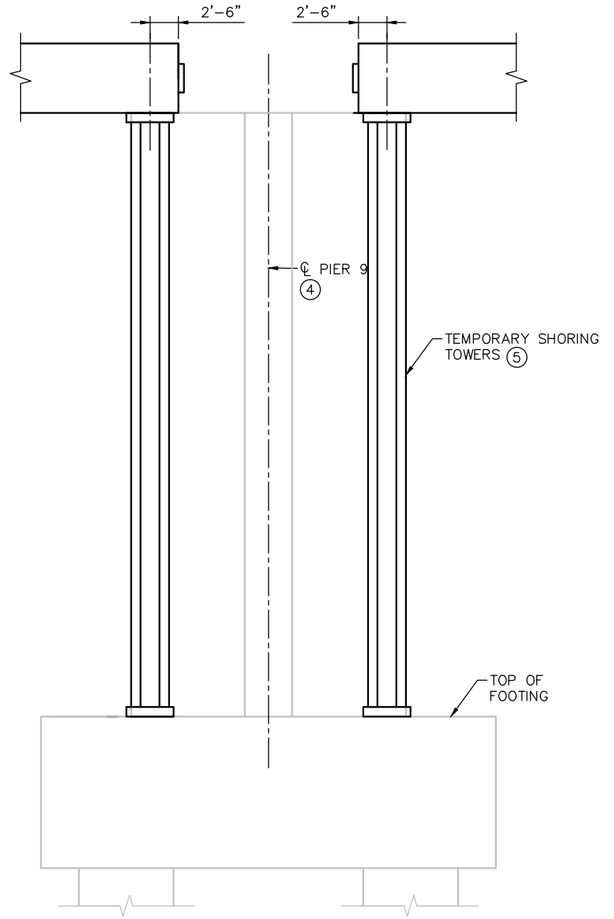

PROPOSED TEMPORARY SHORING TOWER

STAGING PLAN NOTES:

HANDLING STRAPS SHALL BE PLACED WITHIN 12" EITHER SIDE OF THE FOLLOWING STATIONS:

–GIRDER 10W
STA. 1938+41.69
STA. 1938.94.15
STA. 1939+46.61
–GIRDER 10E
STA. 2938+51.71
STA. 2938+88.76
STA. 2939+60.46

① ℄ TRACK 1 (WB–TRK–E4) STA. 1938+79.00

② ℄ TRACK 2 (EB–TRK–E4) STA. 1939+02.53

③ STA. 1939+45.59

④ SEE SHEETS 46–49 FOR PIER 9 DETAILS.

⑤ TEMPORARY SHORING TOWERS SHALL BE DESIGNED, PROVIDED, AND INSTALLED BY THE CONTRACTOR.

⑥ 1½" DIA. F1554 ANCHOR ROD WITH 2½" DIA. A563 HEAVY HEX NUT. SEE ANCHOR ROD DETAIL.

⑦ CONTRACTOR SHALL TAKE ALL NECESSARY MEASURES TO ENSURE TORSION CONTROL BEAMS WILL AVOID SHEAR STIRRUPS PROJECTING OUT OF THE TOP OF EACH GIRDER.

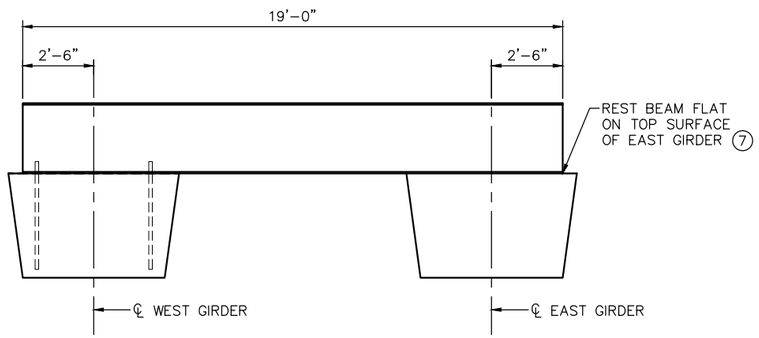

SECTION A–A

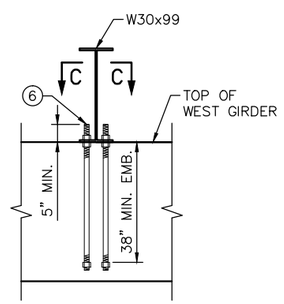

SECTION B–B

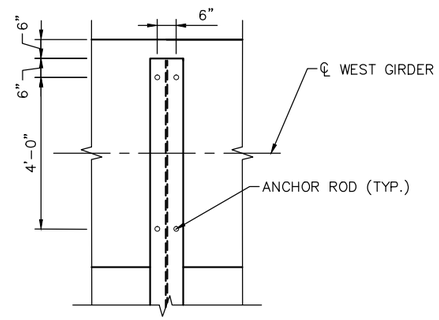

SECTION C–C

ANCHOR ROD DETAIL

NO.	DATE	BY	CHECK	DESIGN	REVISION / SUBMITTAL

DESIGNED BY: RHK | CHECKED BY: EJT
DRAWN BY: LMT | CHECKED BY: EJT

AECOM Kimley»Horn

90% SUBMISSION - 01/22/16

METROPOLITAN COUNCIL

SOUTHWEST Green Line LRT Extension

CIVIL - VOLUME 4G
LRT OVER BNSF
BRIDGE R0697
STAGING PLAN DETAILS

DISCIPLINE: STRUCTURES
SHEET NAME: CBRR0697-BRG-STG-001-6

SHEET 118 OF 118

Jan, 18 2016 01:57 pm V:\3400_ADC\CAD\SEGMENT E4\PLAN SHEETS\STRUCTURES\R0697\CBRR0697-BRG-STG-001.dwg By: lisa.thompson

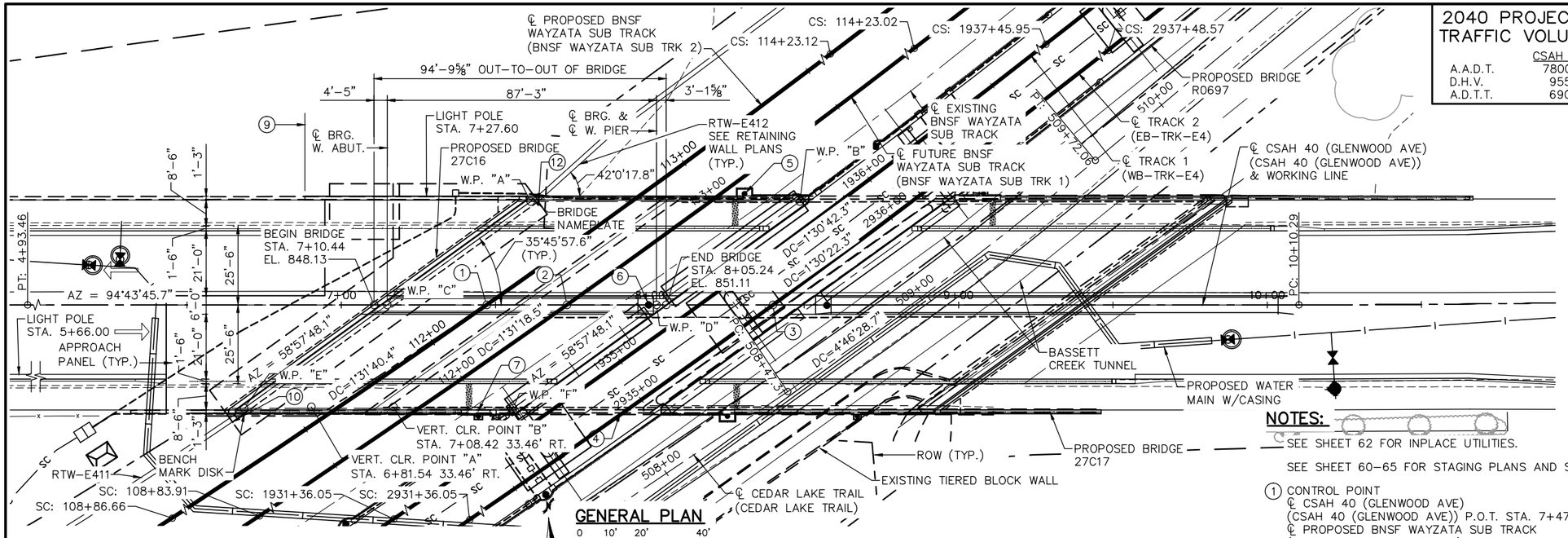

GENERAL PLAN

0 10' 20' 40'
SCALE IN FEET

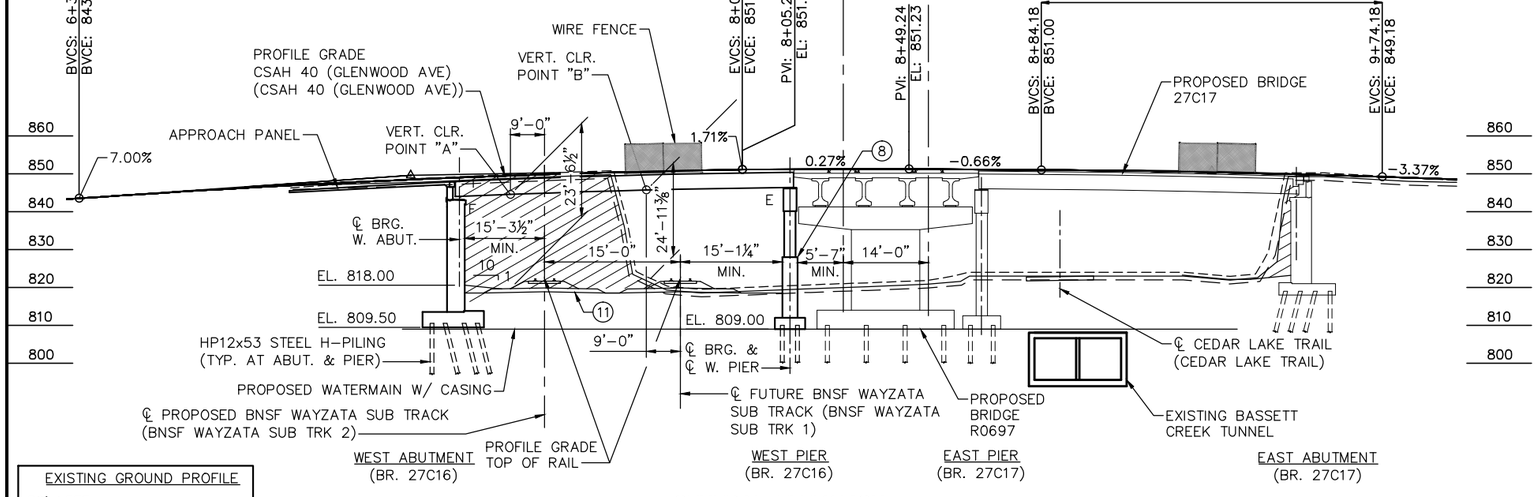

EXISTING GROUND PROFILE
36' LEFT
℄ CSAH 40
36' RIGHT

HATCHED AREA TO BE REMOVED

GENERAL ELEVATION

0 10' 20' 40'
SCALE IN FEET

2040 PROJECTED TRAFFIC VOLUMES

	CSAH 40
A.A.D.T.	7800
D.H.V.	955
A.D.T.T.	690

NOTES:

SEE SHEET 62 FOR INPLACE UTILITIES.

SEE SHEET 60-65 FOR STAGING PLANS AND SOE.

(1) CONTROL POINT
℄ CSAH 40 (GLENWOOD AVE)
(CSAH 40 (GLENWOOD AVE)) P.O.T. STA. 7+47.08
℄ PROPOSED BNSF WAYZATA SUB TRACK
(BNSF WAYZATA SUB TRK 2) P.O.C. STA. 112+21.20
X = 525722.907 Y = 168541.154
Δ = 35°02'00.5"

(2) ℄ CSAH 40 (GLENWOOD AVE)
(CSAH 40 (GLENWOOD AVE)) P.O.T. STA. 7+73.11
℄ FUTURE WAYZATA SUB TRACK
(BNSF WAYZATA SUB TRK 1) P.O.C. STA. 112+41.42
X = 525748.844 Y = 168539.008
Δ = 35°21'28.2"

(3) ℄ CSAH 40 (GLENWOOD AVE)
(CSAH 40 (GLENWOOD AVE)) P.O.T. STA. 8+39.83
℄ TRACK 2 (EB-TRK-E4) P.O.C. STA. 2935+52.51
X = 525815.344 Y = 168533.506
Δ = 36°10'39.1"

(4) EXISTING BRIDGE 27569 TO BE REMOVED, TWO SPAN CONT. STEEL BUILT IN 1989. 181.9' LONG AND 70.4' WIDE.

(5) PEDESTRIAN FLASHER AT STA. 8+30.64

(6) OCS POLE E293520 AT STA. 7+99.54. SEE SYSTEM WIDE ELECTRICAL PLANS.

(7) GATE ARM AT STA. 7+44.39. STEEL MAINTENANCE PLATFORM BEHIND BARRIER.

(8) PROVIDE PIER PROTECTION IN ACCORDANCE WITH MnDOT LRFD BRIDGE DESIGN MANUAL AND AREMA MANUAL.

(9) END OF NW WINGWALL AT F.F. WINGWALL AND BEGIN OF EXISTING RETAINING WALL AT 35.25' LT.
℄ CSAH 40 (GLENWOOD AVE) STA. 6+88.18
X = 525667.116 Y = 168581.140

(10) END OF ABUTMENT AT F.F. ABUTMENT AND BEGIN OF RETAINING WALL RTW-E411 AT 37.88' RT.
℄ CSAH 40 (GLENWOOD AVE) STA. 6+64.70
X = 525637.678 Y = 168510.191

(11) SEE SHEET 61 FOR FULL TRACK TYPICAL SECTION. SEE DRAINAGE PLANS FOR DITCH DIMENSIONS AND LOCATIONS.

(12) END OF ABUTMENT AT F.F. ABUTMENT AND BEGIN OF RETAINING WALL RTW-E412 AT 33.57' LT.
℄ CSAH 40 (GLENWOOD AVE) STA. 7+63.90
X = 525742.435 Y = 168573.227

DESIGN DATA

AASHTO LRFD BRIDGE DESIGN SPECIFICATIONS, 7TH EDITION, 2014 WITH 2015 INTERIM REVISIONS

SOUTHWEST LIGHT RAIL TRANSIT DESIGN CRITERIA (REVISION 4.0)

LOAD AND RESISTANCE FACTOR DESIGN METHOD
HL-93 LIVE LOAD

DEAD LOAD INCLUDES 20SF ALLOWANCE FOR FUTURE WEARING COURSE MODIFICATIONS

MATERIAL DESIGN PROPERTIES:
REINFORCED CONCRETE:
f'c = 4 KSI n = 8
fy = 60 KSI REINFORCEMENT

STRUCTURAL STEEL:
fy = 36 KSI STRUCTURAL STEEL SPEC. 3306
fy = 50 KSI STRUCTURAL STEEL SPEC. 3309 (PAINTED)

DESIGN SPEED: OVER = 30 MPH
UNDER = PER BNSF RAIL

DECK AREA = 6706 SQ. FT.

BRIDGE OPERATING RATING: X.XX

LIST OF SHEETS

NO.	DESCRIPTION
1	GENERAL PLAN AND ELEVATION
2	TRANSVERSE SECTION AND QUANTITIES
3	BRIDGE LAYOUT
4-7	WEST ABUTMENT DETAILS
8-15	WEST ABUTMENT REINFORCEMENT
16-18	WEST PIER DETAILS
19-21	WEST PIER REINFORCEMENT
22	FRAMING PLAN
23	STRUCTURAL STEEL DETAILS
24-33	SUPERSTRUCTURE DETAILS
34-37	RAILING DETAILS
38	STRUCTURAL TUBE RAILING AND CONCRETE PARAPET
39	CONCRETE CURB
40	CONCRETE BARRIER (TYPE P-4, TL-4)
41-42	WIRE FENCE (DESIGN W-1, SPECIAL DESIGN)
43-44	CONDUIT SYSTEM
45-47	WATERPROOF EXPANSION DEVICE
48-52	APPROACH PANEL DETAILS
53-57	BRIDGE DETAILS
58	AS-BUILT BRIDGE DATA
59-61	BRIDGE SURVEY
62	BRIDGE SURVEY PLAN
63-64	BRIDGE SURVEY PROFILE
65-68	STAGING PLAN

BRIDGE NO. 27C16

CSAH 40 (GLENWOOD AVENUE) OVER BNSF WAYZATA SUB R.R. TRACKS.
0.2 MI. EAST OF JCT. CSAH 40 (GLENWOOD AVENUE) & INTERSTATE 94

87' STEEL BEAM SPAN, 54°14'02.4" SKEW, 2-21' RDWY., 6'-0" RAISED CONCRETE MEDIAN, TYPE P-2 CONC. PARAPETS & STRUC. TUBE RAILINGS, 8'-6" SIDEWALKS WITH CONC. CURBS & PARAPETS W/ SAFETY RAILS

BRIDGE I.D. NO. 301

GENERAL PLAN AND ELEVATION

SEC 22 T 29 N R 24 W
CITY OF MINNEAPOLIS HENNEPIN COUNTY

JOB NO.: T9N635 | STATE PROJ. NO.: 9909-01 | MNDOT REVIEW: JOE NIETFELD

NO.	DATE	BY	CHECK	DESIGN	REVISION / SUBMITTAL

DESIGNED BY: KAE CHECKED BY: EJT
DRAWN BY: NAO CHECKED BY: JBW

AECOM Kimley»Horn

90% SUBMISSION - 01/22/16

METROPOLITAN COUNCIL

SOUTHWEST Green Line LRT Extension

CIVIL - VOLUME 4G
CSAH 40 (GLENWOOD AVENUE) - WEST
BRIDGE 27C16
GENERAL PLAN AND ELEVATION

DISCIPLINE: STRUCTURES
SHEET NAME: CBR27C16-BRG-GPE

SHEET 1 OF 68

Jan, 14 2016 11:05 am V:\3400_ADC\CAD\SEGMENT E4\PLAN SHEETS\STRUCTURES\27C16\CBR27C16-BRG-GPE.dwg By: phil.horton

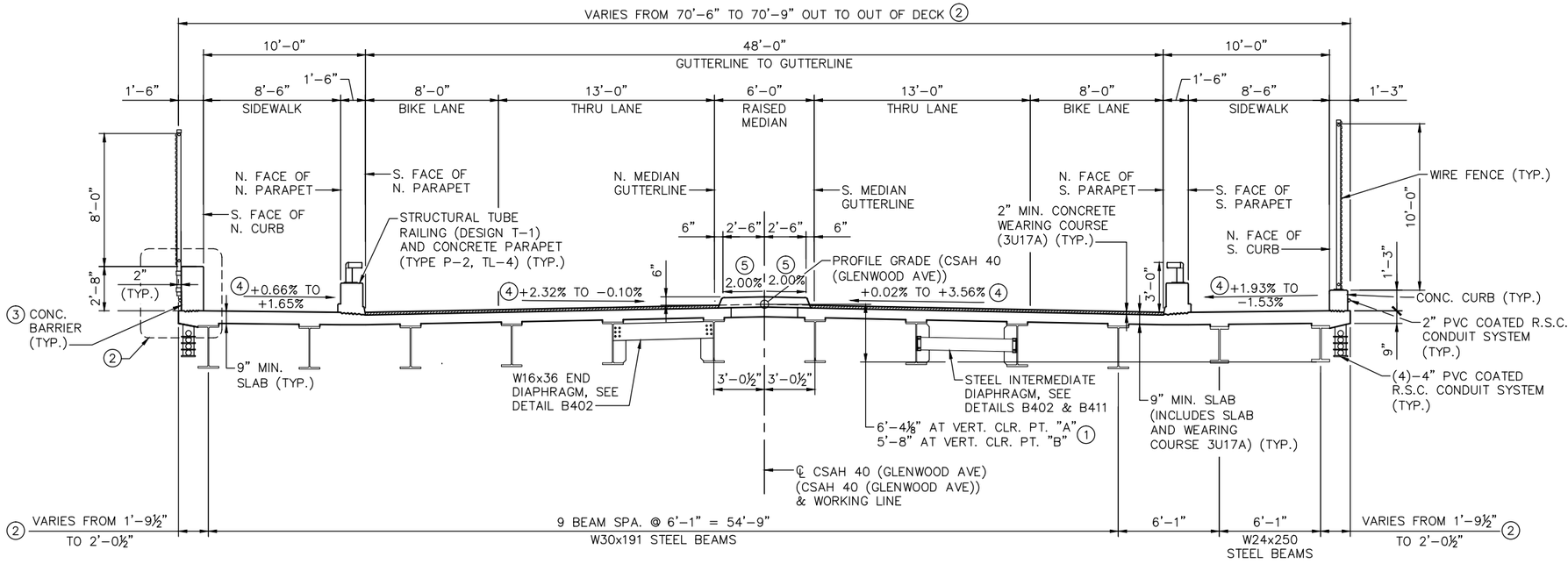

IDEALIZED TRANSVERSE SECTION

2' 4' 8'

SCALE IN FEET

CONSTRUCTION NOTES:

THE 2016 EDITION OF THE MINNESOTA DEPARTMENT OF TRANSPORTATION "STANDARD SPECIFICATIONS FOR CONSTRUCTION" SHALL GOVERN.

BRIDGE SEAT REINFORCEMENT SHALL BE CAREFULLY PLACED TO AVOID INTERFERENCE WITH DRILLING HOLES FOR ANCHOR RODS. THE BEAMS SHALL BE ERECTED IN FINAL POSITION PRIOR TO DRILLING HOLES FOR AND PLACING ANCHOR RODS.

THE BAR SIZES SHOWN IN THIS PLAN ARE IN U.S. CUSTOMARY DESIGNATIONS. THE FIRST DIGIT OR THE FIRST TWO DIGITS OF EACH BAR MARK INDICATE THE BAR SIZE.

BARS MARKED WITH THE SUFFIX "E" SHALL BE EPOXY COATED IN ACCORDANCE WITH MNDOT SPEC. 3301.

ALL REINFORCEMENT SHALL BE 2 INCHES CLEAR, UNLESS SHOWN OR NOTED OTHERWISE.

THE PILE LOADS SHOWN IN THE PLANS AND THE CORRESPONDING NOMINAL PILE BEARING RESISTANCE (Rn) WERE COMPUTED USING LRFD METHODOLOGY. PILE BEARING RESISTANCE DETERMINED IN THE FIELD SHALL INCORPORATE THE METHODS AND/OR FORMULAS DESCRIBED IN THE SPECIAL PROVISIONS.

THE SUBSURFACE UTILITY INFORMATION IN THIS PLAN IS UTILITY QUALITY LEVEL D. THIS UTILITY QUALITY LEVEL WAS DETERMINED ACCORDING TO THE GUIDELINES OF CI/ASCE 38-02, ENTITLED "STANDARD GUIDELINES FOR THE COLLECTION AND DEPICTION OF EXISTING SUBSURFACE UTILITY DATA".

AN AESTHETIC DESIGN GUIDE FOR THE SWLRT CORRIDOR HAS BEEN PREPARED.

GROUNDING NOTES:

SEE SHEETS ELE-SITE-SCH-504, ELE-SITE-600, ELE-SITE-DTL-601 AND ELE-SITE-DTL-602 FOR ADDITIONAL FENCE GROUNDING INFORMATION. FOR BRIDGES, ABUTMENTS AND RETAINING WALLS THAT DO NOT HAVE STRAY CURRENT SYSTEMS, GROUND THE FENCE AS SHOWN IN THE WIRE FENCE DETAIL.

NOTES:

(1) CRITICAL CLEAR DIMENSION SHOWN ON SHEET 1 MEASURED TO OUTSIDE BEAM. DIMENSION MEASURED FROM OUTSIDE BEAM TO PROFILE GRADE.

(2) SEE SHEET 24 FOR CONCRETE BARRIER AND CONCRETE CURB LOCATIONS AND DIMENSIONS.

(3) CONCRETE CURB TRANSITIONS ON BOTH SIDES OF BRIDGE TO CONCRETE BARRIER. SEE SHEET 24 FOR LOCATIONS

(4) "+ VALUE" DENOTES ARROW DIRECTION AS SHOWN. "- VALUE" DENOTES OPPOSITE ARROW DIRECTION AS SHOWN.

(5) SLOPE TOP SURFACE OF CONCRETE MEDIAN .

6. DRAINAGE HAS DETERMINED THAT DECK DRAINS ARE NOT REQUIRED.

EXCAVATION NOTES:

QUANTITY OF STRUCTURE EXCAVATION IS COMPUTED WITH THE ELEVATION SHOWN FOR EACH SUBSTRUCTURE AS THE UPPER LIMIT. EXCAVATION ABOVE THESE ELEVATIONS WILL BE UNDER THE GRADING PORTION OF THE CONTRACT.

JOINT NOTES:

1. FINISH TOP OF ALL SIDEWALK AND MEDIAN JOINTS WITH ¼" RADIUS EDGER, AND VERTICAL EDGES WITH ½" V STRIPS.
2. SUPERSTRUCTURE DIMENSIONS ARE BASED ON THE EXPANSION JOINT DIMENSION AT 90° F.

NOTES:

(1) A BENCH MARK IS REQUIRED. LOCATED AT THE SW CORNER OF THE BRIDGE. STATE WILL FURNISH DISK. BEND PRONGS OUTWARD TO ANCHOR DISK IN CONCRETE. BOTTOM OF DISK TOP TO BE PLACED FLUSH WITH CONCRETE.

(2) QUANTITIES LISTED FOR THE COMPONENT ITEMS OF THE LUMP SUM BR 27C16 ITEM ARE FOR INFORMATIONAL PURPOSES. ANY ADDITIONAL ITEMS OR CHANGES IN QUANTITIES REQUIRED SHALL BE PROVIDED BY THE CONTRACTOR WITH NO ADDITIONAL COMPENSATION.

(3) MEASUREMENT AND PAYMENT FOR COMPONENT ITEMS SHALL BE PART OF THE LUMP SUM PAYMENT FOR THE BR 27C16. REFER TO MnDOT STANDARD SPECIFICATION OR SPECIAL PROVISION FOR TECHNICAL SPECIFICATION REQUIREMENTS FOR ALL PROVISION OTHER THAN MEASUREMENT AND PAYMENT REQUIREMENTS.

(4) BACKFILL BEHIND ABUTMENTS SHALL BE STRUCTURAL BACKFILL BORROW PER SPEC. 3149.2.D.2. SEE SHEETS 63 & 64 FOR PLACEMENT LIMITS. BACKFILL DENSITY SHALL BE ATTAINED BY THE SPECIFIED DENSITY METHOD IN ACCORDANCE WITH SPEC. 2105.3.F.1.

SCHEDULE OF QUANTITIES

SPEC. SECTION	COMPONENT ITEM	UNIT	QUANTITY
-	CONSTRUCT BRIDGE 27C16	LUMP SUM	LS

COMPONENT ITEM SUMMARY (BRIDGE 27C16)

	SPEC. SECTION (3)	COMPONENT ITEM	UNIT (2)	QUANTITY (2)
	2401	STRUCTURAL CONCRETE (1G52)	CU. YD.	
(1)	2401	STRUCTURAL CONCRETE (3B52)	CU. YD.	
	2401	TYPE CURB RAILING CONCRETE (3S52)	LIN. FT.	
	2401	TYPE P-2 (TL-4) RAILING CONCRETE (3S52)	LIN. FT.	
	2401	RAISED MEDIAN CONCRETE (3S52)	SQ. FT.	
	2401	REINFORCEMENT BARS	POUND	
	2401	REINFORCEMENT BARS (EPOXY COATED)	POUND	
	2401	TYPE MOD P-4 (TL-4) RAILING CONCRETE (3S52)	LIN. FT.	
(4)	SB-XX	STRUCTURE EXCAVATION CLASS U	CU. YD.	
	SB-XX	BRIDGE SLAB CONCRETE (3YHPC-S)	SQ. FT.	
	2402	EXPANSION JOINT DEVICES TYPE 5	LIN. FT.	
	2402	BEARING ASSEMBLY	EACH	
	2402	STRUCTURAL STEEL (3309)	POUND	
	2402	STRUCTURAL TUBE RAILING DESIGN T-1	LIN. FT.	
	2406	BRIDGE APPROACH PANELS	SQ. YD.	
	2411	REVERSE BATTEN SURFACE TREATMENT	SQ. YD.	
	2442	REMOVE EXISTING BRIDGE	EACH	0.5
	2451	STRUCTURAL BACKFILL	CU. YD.	
	2452	STEEL H-PILING 12"	LIN. FT.	
	2452	STEEL H-TEST PILE 70 FT LONG 12"	EACH	
	2452	STEEL H-TEST PILE 95 FT LONG 12"	EACH	
	2452	SHEETL H-TEST PILE 100 FT LONG 12"	EACH	
	2452	PILE TIP PROTECTION 12"	EACH	
	2479	INORGANIC ZINC-RICH PAINT SYSTEM (SHOP)	SQ. FT.	
	2479	INORGANIC ZINC-RICH PAINT SYSTEM (FIELD)	SQ. FT.	
	2502	DRAINAGE SYSTEM TYPE (B910)	EACH	
	2545	CONDUIT SYSTEM (SYSTEM WIDE ELECTRICAL)	EACH	
	2545	CONDUIT SYSTEM (LIGHTING)	EACH	
	2545	LIGHT SUPPORT BRACKET	EACH	
	2557	WIRE FENCE DESIGN SPECIAL	LIN. FT.	
	2557	WIRE FENCE DESIGN W-1	LIN. FT.	

NO.	DATE	BY	CHECK	DESIGN	REVISION / SUBMITTAL

DESIGNED BY: KAE | CHECKED BY: EJT
DRAWN BY: NAO | CHECKED BY: JBW

AECOM Kimley»Horn

90% SUBMISSION - 01/22/16

METROPOLITAN COUNCIL

SOUTHWEST Green Line LRT Extension

CIVIL - VOLUME 4G
CSAH 40 (GLENWOOD AVENUE) - WEST
BRIDGE 27C16
TRANSVERSE SECTION AND QUANTITIES

DISCIPLINE: STRUCTURES
SHEET NAME: CBR27C16-BRG-TRN-001

SHEET 2 OF 68

Jan, 14 2016 11:06 am V:\3400_ADC\CAD\SEGMENT E4\PLAN SHEETS\STRUCTURES\27C16\CBR27C16-BRG-TRN-001.dwg By: phil.horton

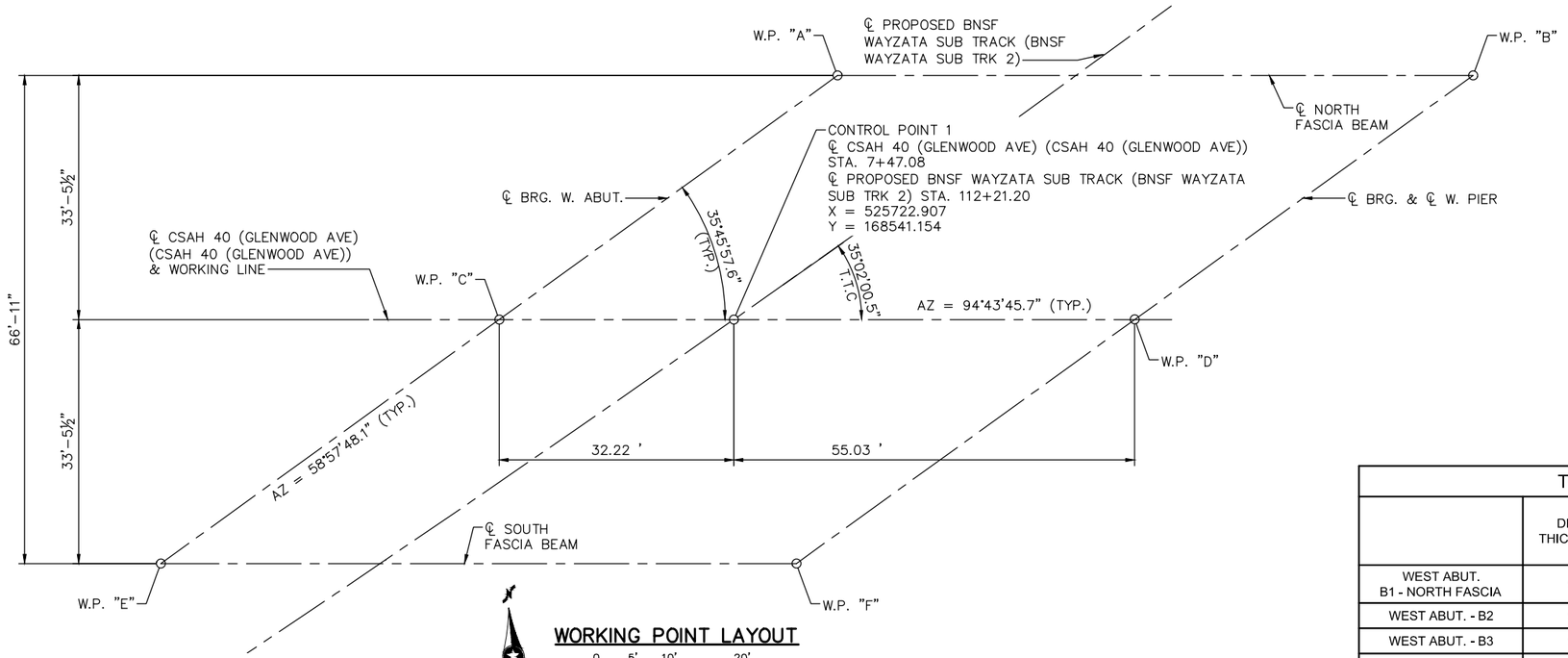

WORKING POINT LAYOUT

0 5' 10' 20'

SCALE IN FEET

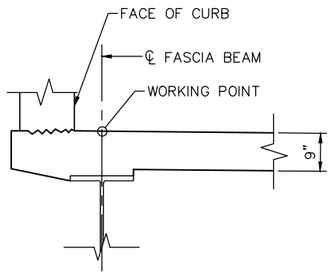

NORTH

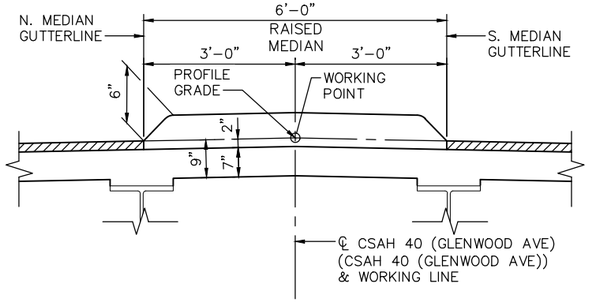

CENTERLINE

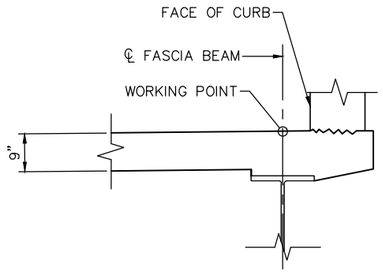

SOUTH

WORKING POINT LOCATIONS

DIMENSIONS BETWEEN WORKING POINTS								COORDINATES		ELEVATIONS			
POINT	STATION	A	B	C	D	E	F	X	Y	TOP OF SLAB	TOP OF SLAB TO BRIDGE SEAT	BRIDGE SEAT	POINT
A	7+61.31		87.25	57.24	52.76		67.15	525739.851	168573.324	850.46	3.87	846.59	A
B	8+48.56				57.24	192.17		525826.796	168566.131	851.43	3.97	847.46	B
C	7+14.86				87.25	57.24	52.76	525690.802	168543.810	848.33			C
D	8+02.11						57.24	525777.748	168536.617	851.06			D
E	6+68.42						87.25	525641.753	168514.296	846.56	3.51	843.06	E
F	7+55.66							525728.698	168507.103	850.71	3.61	847.10	F

TOP OF ROADWAY TO BRIDGE SEAT						
	DECK THICKNESS	STOOL HEIGHT (1)	BEAM HEIGHT	BEARING HEIGHT	TOTAL	
					INCHES	FEET
WEST ABUT. B1 - NORTH FASCIA	9"	1 7/8"	30 3/4"	4 7/8"	46 1/2"	3.87
WEST ABUT. - B2	9"	1 7/8"	30 3/4"	4 7/8"	46 1/2"	3.87
WEST ABUT. - B3	9"	1 3/4"	30 3/4"	4 7/8"	46 3/8"	3.87
WEST ABUT. - B4	9"	1 7/8"	30 3/4"	4 7/8"	46 1/2"	3.87
WEST ABUT. - B5	9"	1 7/8"	30 3/4"	4 7/8"	46 1/2"	3.87
WEST ABUT. - B6	9"	2 1/8"	30 3/4"	4 7/8"	46 3/4"	3.89
WEST ABUT. - B7	9"	1 7/8"	30 3/4"	4 7/8"	46 1/2"	3.87
WEST ABUT. - B8	9"	2"	30 3/4"	4 7/8"	46 5/8"	3.88
WEST ABUT. - B9	9"	1 7/8"	30 3/4"	4 7/8"	46 1/2"	3.88
WEST ABUT. - B10	9"	1 3/4"	30 3/4"	4 7/8"	46 3/8"	3.87
WEST ABUT. - B11	9"	1 7/8"	26 3/8"	4 7/8"	42"	3.51
WEST ABUT. B12 - SOUTH FASCIA	9"	1 7/8"	26 3/8"	4 7/8"	42"	3.51
WEST PIER B1 - NORTH FASCIA	9"	1 3/4"	30 3/4"	6 1/8"	47 5/8"	3.97
WEST PIER - B2	9"	1 7/8"	30 3/4"	6 1/8"	47 3/4"	3.98
WEST PIER - B3	9"	1 3/4"	30 3/4"	6 1/8"	47 5/8"	3.97
WEST PIER - B4	9"	1 7/8"	30 3/4"	6 1/8"	47 3/4"	3.98
WEST PIER - B5	9"	1 3/4"	30 3/4"	6 1/8"	47 5/8"	3.97
WEST PIER - B6	9"	1 3/4"	30 3/4"	6 1/8"	47 5/8"	3.97
WEST PIER - B7	9"	1 3/4"	30 3/4"	6 1/8"	47 5/8"	3.97
WEST PIER - B8	9"	1 3/4"	30 3/4"	6 1/8"	47 5/8"	3.97
WEST PIER - B9	9"	1 3/4"	30 3/4"	6 1/8"	47 5/8"	3.97
WEST PIER - B10	9"	1 3/4"	30 3/4"	6 1/8"	47 5/8"	3.97
WEST PIER - B11	9"	1 3/4"	26 3/8"	6 1/8"	43 1/8"	3.60
WEST PIER B12 - SOUTH FASCIA	9"	1 7/8"	26 3/8"	6 1/8"	43 1/4"	3.61

NOTES:

(1) STOOL HEIGHT INCLUDES CONCRETE STOOL ONLY.

NO.	DATE	BY	CHECK	DESIGN	REVISION / SUBMITTAL

DESIGNED BY: KAE CHECKED BY: EJT

DRAWN BY: NAO CHECKED BY: JBW

AECOM Kimley»Horn

90% SUBMISSION - 01/22/16

METROPOLITAN COUNCIL

SOUTHWEST Green Line LRT Extension

CIVIL - VOLUME 4G
CSAH 40 (GLENWOOD AVENUE) - WEST
BRIDGE 27C16
BRIDGE LAYOUT

DISCIPLINE: STRUCTURES

SHEET NAME: CBR27C16-BRG-SUP-001

SHEET 3 OF 68

Jan, 14 2016 11:06 am V:\3400_ADC\CAD\SEGMENT E4\PLAN SHEETS\STRUCTURES\27C16\CBR27C16-BRG-SUP-001.dwg By: phil.horton

WEST ABUTMENT COMPUTED PILE LOAD - TONS/PILE	
FACTORED DEAD LOAD + EARTH PRESSURE	90.6
FACTORED LIVE LOAD	5.5
* FACTORED DESIGN LOAD	96.1

* BASED ON STRENGTH I LOAD COMBINATION.

NORTHWEST WINGWALL (1) COMPUTED PILE LOAD - TONS/PILE	
FACTORED DEAD LOAD + EARTH PRESSURE	106.1
FACTORED LIVE LOAD	18.7
* FACTORED DESIGN LOAD	124.8

* BASED ON STRENGTH I LOAD COMBINATION.

WEST ABUTMENT REQUIRED NOMINAL PILE BEARING RESISTANCE FOR H-PILES Rn - TONS/PILE		
FIELD CONTROL METHOD	φdyn	* Rn
MN/DOT PILE FORMULA 2012 (MPF12) $R_n = 20\sqrt{\frac{W \times H}{1000}} \times log\left(\frac{10}{S}\right)$	0.60	161
PDA	0.65	148

* Rn = (FACTORED DESIGN LOAD) / φdyn

NORTHWEST WINGWALL (1) REQUIRED NOMINAL PILE BEARING RESISTANCE FOR H-PILES Rn - TONS/PILE		
FIELD CONTROL METHOD	φdyn	* Rn
MN/DOT PILE FORMULA 2012 (MPF12) $R_n = 20\sqrt{\frac{W \times H}{1000}} \times log\left(\frac{10}{S}\right)$	0.60	209
PDA	0.65	193

* Rn = (FACTORED DESIGN LOAD) / φdyn

GENERAL PILE NOTES

3 HP12x53 STEEL TEST PILES 95 FT. LONG
108 HP12x53 STEEL PILES EST. 85 FT. LENGTH
111 HP12x53 STEEL PILES REQ'D FOR WEST ABUTMENT

1 HP12x53 STEEL TEST PILES 100 FT. LONG
10 HP12x53 STEEL PILES EST. 90 FT. LENGTH
11 HP12x53 STEEL PILES REQ'D FOR NORTHWEST WINGWALL STEPPED FOOTING

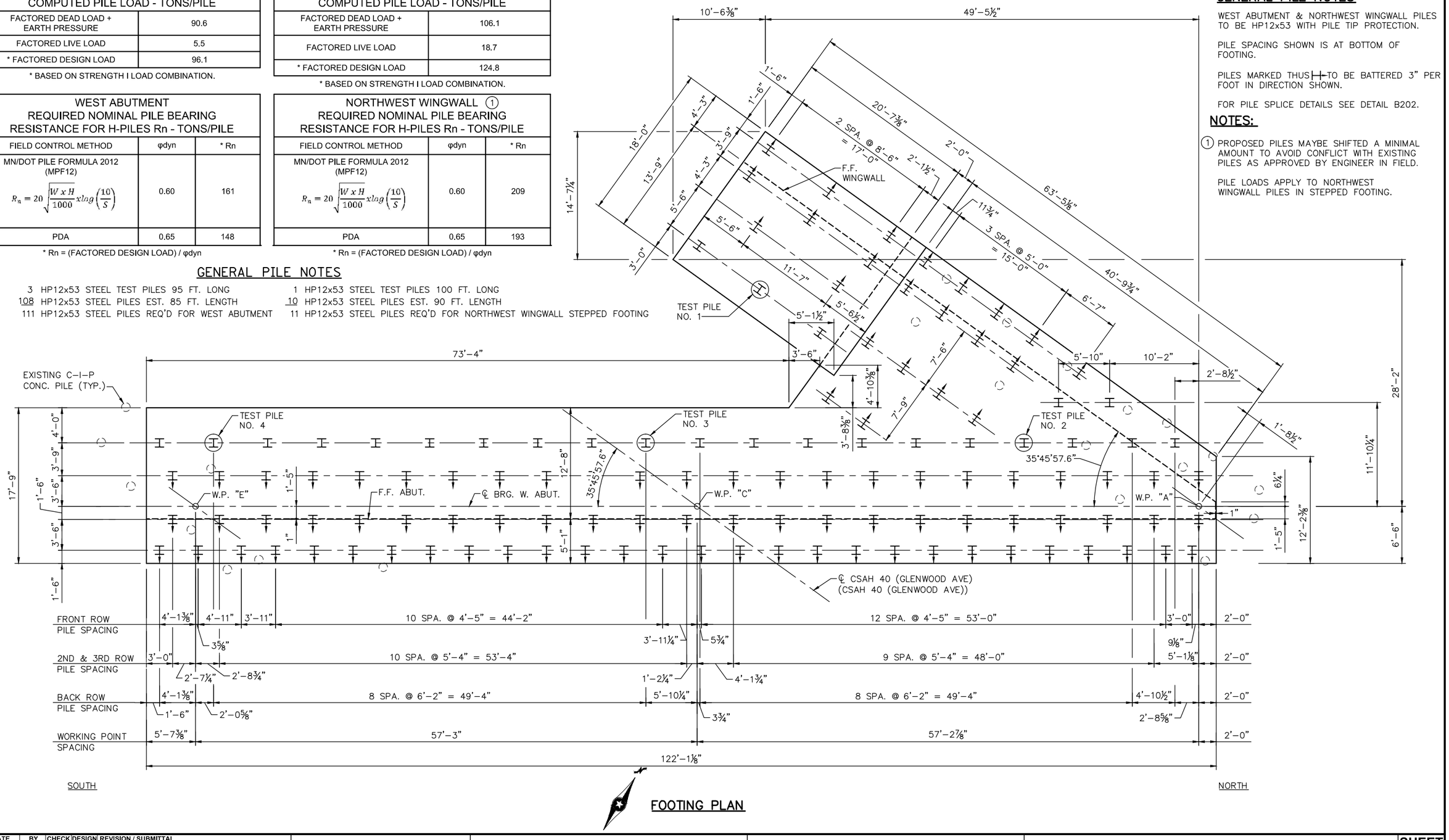

GENERAL PILE NOTES

WEST ABUTMENT & NORTHWEST WINGWALL PILES TO BE HP12x53 WITH PILE TIP PROTECTION.

PILE SPACING SHOWN IS AT BOTTOM OF FOOTING.

PILES MARKED THUS ⊣⊢ TO BE BATTERED 3" PER FOOT IN DIRECTION SHOWN.

FOR PILE SPLICE DETAILS SEE DETAIL B202.

NOTES:

(1) PROPOSED PILES MAYBE SHIFTED A MINIMAL AMOUNT TO AVOID CONFLICT WITH EXISTING PILES AS APPROVED BY ENGINEER IN FIELD.

PILE LOADS APPLY TO NORTHWEST WINGWALL PILES IN STEPPED FOOTING.

FOOTING PLAN

NO.	DATE	BY	CHECK	DESIGN	REVISION / SUBMITTAL

DESIGNED BY: HLR | CHECKED BY: BLF
DRAWN BY: NAO | CHECKED BY: JBW

AECOM Kimley»Horn

90% SUBMISSION - 01/22/16

METROPOLITAN COUNCIL

SOUTHWEST Green Line LRT Extension

CIVIL - VOLUME 4G
CSAH 40 (GLENWOOD AVENUE) - WEST
BRIDGE 27C16
WEST ABUTMENT DETAILS 1

DISCIPLINE: STRUCTURES
SHEET NAME: CBR27C16-BRG-ABT-001-1

SHEET 4 OF 68

Jan, 14 2016 11:06 am V:\3400_ADC\CAD\SEGMENT E4\PLAN SHEETS\STRUCTURES\27C16\CBR27C16-BRG-ABT-001.dwg By: phil.horton

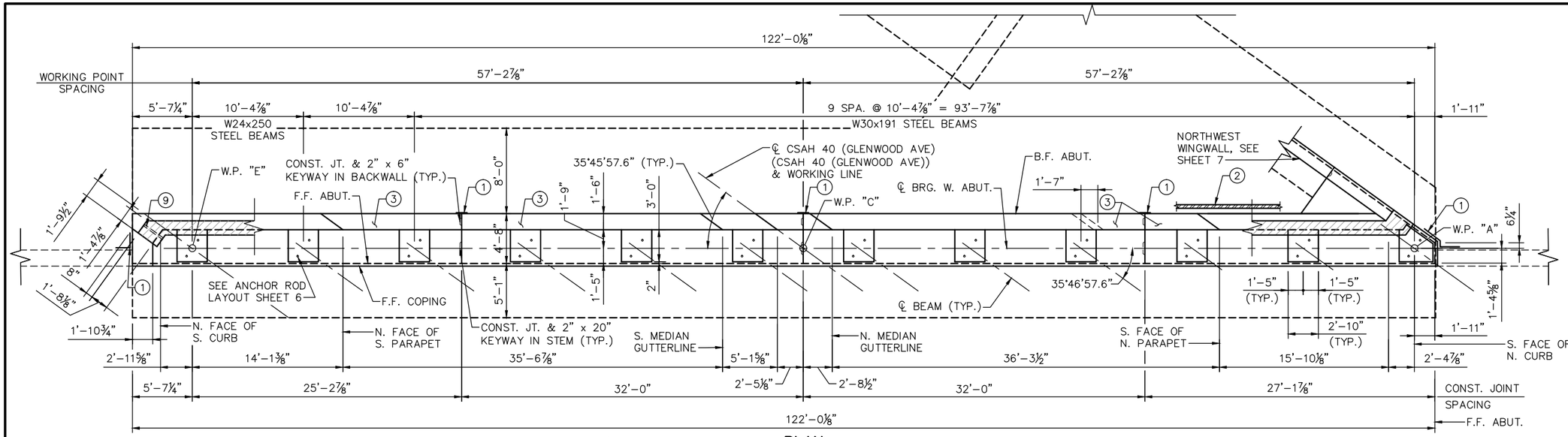

PLAN

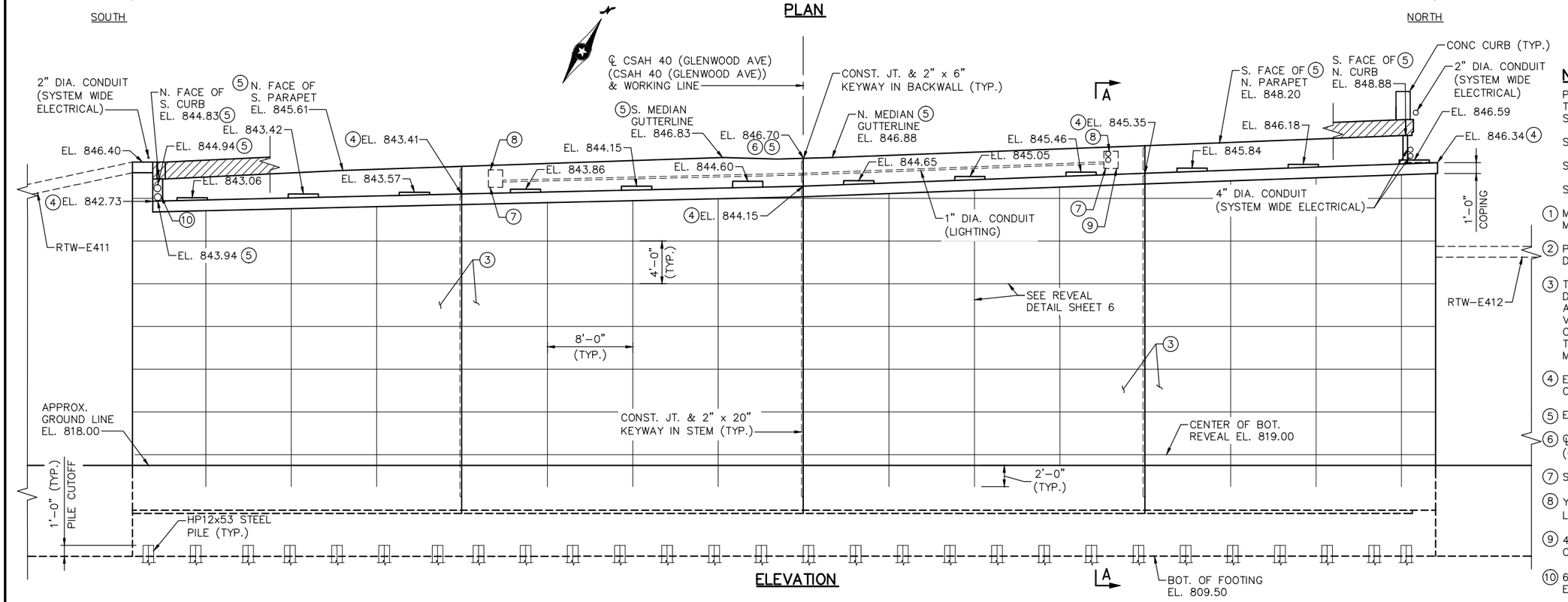

ELEVATION

NOTES:

PAVING BLOCK HATCHED AREA INDICATES THAT PORTION TO BE PLACED WITH THE SUPERSTRUCTURE CONCRETE.

SEE SHEET 6 FOR SECTION A-A.

SEE SHEET 7 FOR CORNER DETAILS.

SEE SHEET 6 FOR ANCHOR ROD LAYOUTS.

1. MEMBRANE WATERPROOFING SYSTEM PER MnDOT 2481.3.B.
2. PERFORATED PIPE, SEE DETAIL B910 FOR DRAINAGE DETAILS.
3. THERE SHALL BE A 72 HOUR MINIMUM TIME DELAY BETWEEN CONCRETE POURS OF ADJACENT ABUTMENT SECTIONS THAT HAVE VERTICAL CONSTRUCTION JOINTS. CONTRACTOR MAY PROPOSED TO REDUCE THE WAITING PERIOD IF THE CURE IS MAINTAINED. SEE SPECIAL PROVISIONS.
4. ELEVATION AT FRONT FACE OF ABUTMENT COPING.
5. ELEVATION AT FRONT FACE OF BACKWALL.
6. ℄ CSAH 40 (GLENWOOD AVE)(CSAH 40 (GLENWOOD AVE)) & WORKING LINE.
7. SEE SHEET 15 FOR LIGHTING ANCHORAGE.
8. YOKE MOUNTED LIGHT (SEE TRAFFIC/ LIGHTING PLANS).
9. 4" DIA. SLEEVE FOR 3" DIA. LIGHTING CONDUIT.
10. 6" DIA. SLEEVE FOR 4" DIA. SYSTEM WIDE ELECTRICAL CONDUIT.

NO.	DATE	BY	CHECK	DESIGN	REVISION / SUBMITTAL

DESIGNED BY: BLF | CHECKED BY: MDJ
DRAWN BY: NAO | CHECKED BY: JBW

AECOM Kimley»Horn

90% SUBMISSION - 01/22/16

METROPOLITAN COUNCIL

SOUTHWEST Green Line LRT Extension

CIVIL - VOLUME 4G
CSAH 40 (GLENWOOD AVENUE) - WEST
BRIDGE 27C16
WEST ABUTMENT DETAILS 2

DISCIPLINE: STRUCTURES
SHEET NAME: CBR27C16-BRG-ABT-001-2

SHEET 5 OF 68

Jan, 14 2016 11:07 am V:\3400_ADC\CAD\SEGMENT E4\PLAN SHEETS\STRUCTURES\27C16\CBR27C16-BRG-ABT-001.dwg By: phil.horton

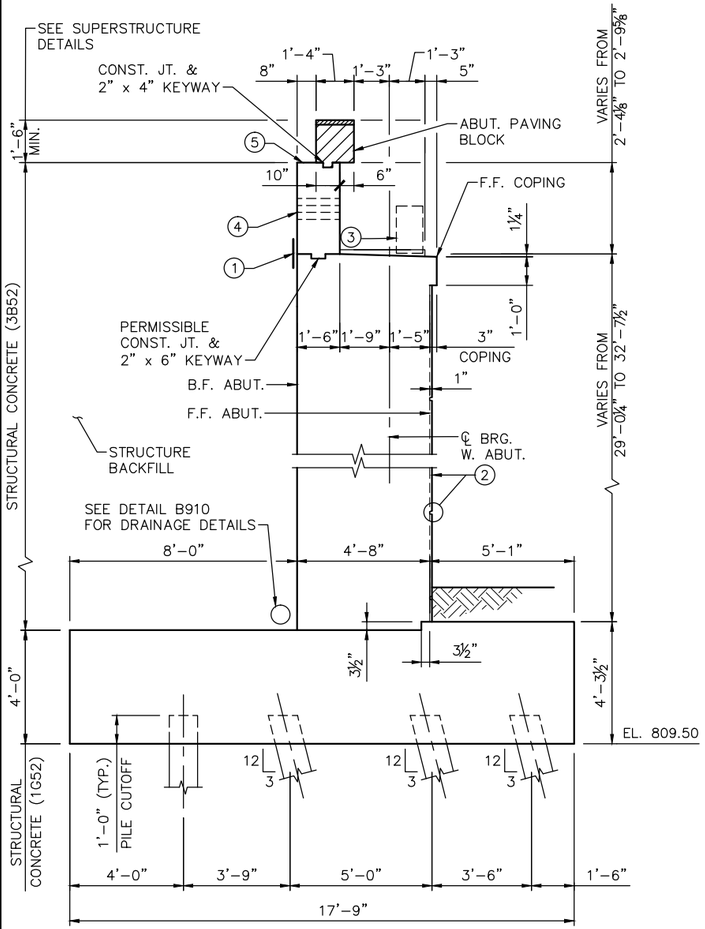

SECTION A–A

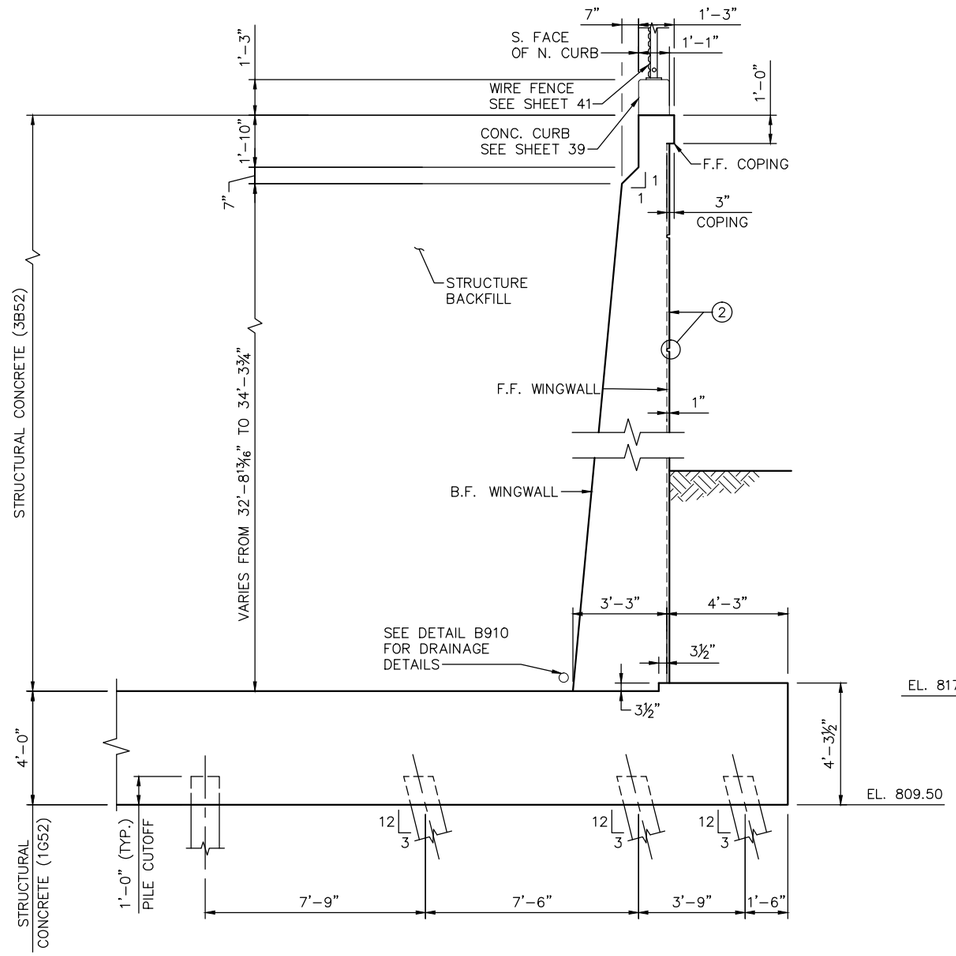

SECTION B–B

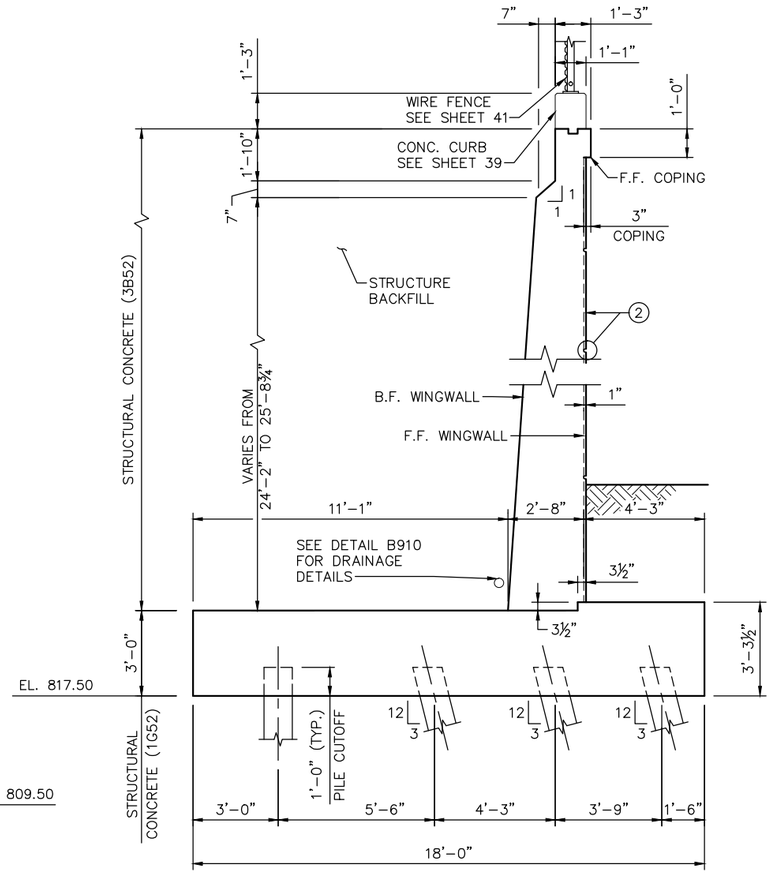

SECTION C–C

NOTES:

PAVING BLOCK HATCHED AREA INDICATES THAT PORTION TO BE PLACED WITH THE SUPERSTRUCTURE CONCRETE.

SEE SHEET 5 FOR LOCATION OF SECTION A–A.

SEE SHEET 7 FOR LOCATION OF SECTIONS B–B, & C–C.

(1) MEMBRANE WATERPROOFING SYSTEM PER MnDOT SPEC. 2481.3.B.

(2) SEE REVEAL DETAIL THIS SHEET.

(3) YOKE MOUNTED LIGHT, SEE TRAFFIC/LIGHTING PLANS FOR DETAILS.

(4) 6" DIA. SLEEVE FOR 4" DIA. CONDUIT, SEE SHEET 5.

(5) TOP OF BACKWALL LEVEL PERPENDICULAR TO FRONT FACE OF BACKWALL IS SLOPED BETWEEN LOCATIONS AND ELEVATIONS SHOWN ON SHEET 5.

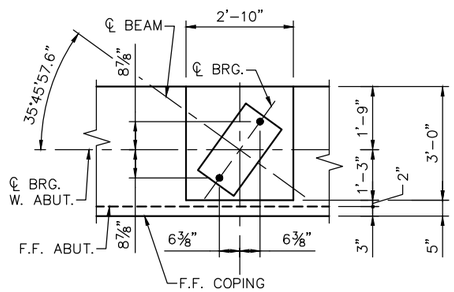

ANCHOR ROD LAYOUT (W30X191)

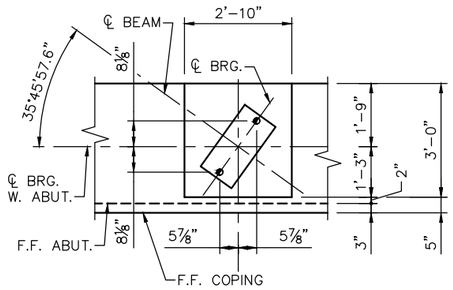

ANCHOR ROD LAYOUT (W24X250)

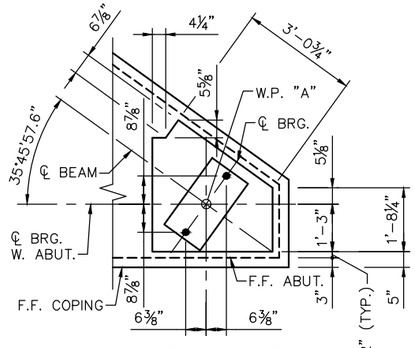

CORNER ANCHOR ROD LAYOUT

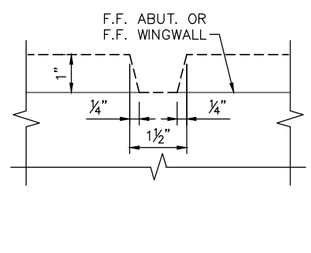

REVEAL DETAIL

NO.	DATE	BY	CHECK	DESIGN	REVISION / SUBMITTAL

DESIGNED BY: HLR CHECKED BY: BLF
DRAWN BY: NAO CHECKED BY: BLF

AECOM Kimley»Horn

90% SUBMISSION - 01/22/16

METROPOLITAN COUNCIL

SOUTHWEST Green Line LRT Extension

CIVIL - VOLUME 4G
CSAH 40 (GLENWOOD AVENUE) - WEST
BRIDGE 27C16
WEST ABUTMENT DETAILS 3

DISCIPLINE: STRUCTURES
SHEET NAME: CBR27C16-BRG-ABT-001-3

SHEET 6 OF 68

Jan, 14 2016 11:07 am V:\3400_ADC\CAD\SEGMENT E4\PLAN SHEETS\STRUCTURES\27C16\CBR27C16-BRG-ABT-001.dwg By: phil.horton

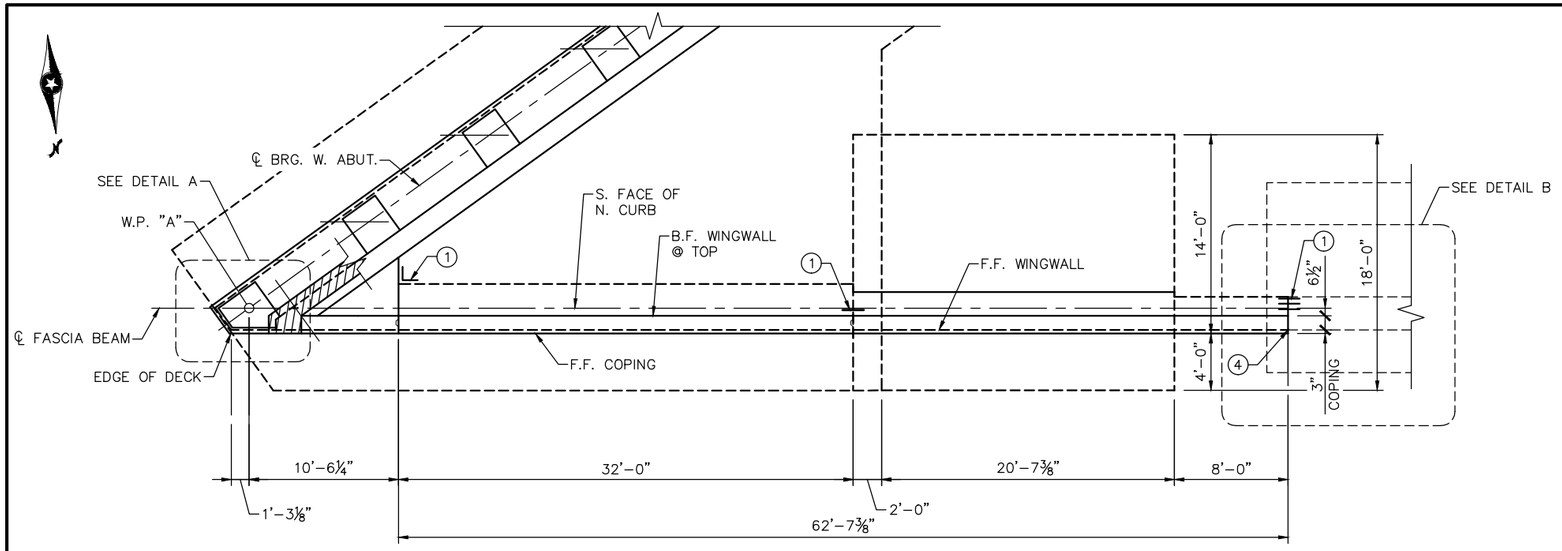

NORTHWEST WINGWALL PLAN

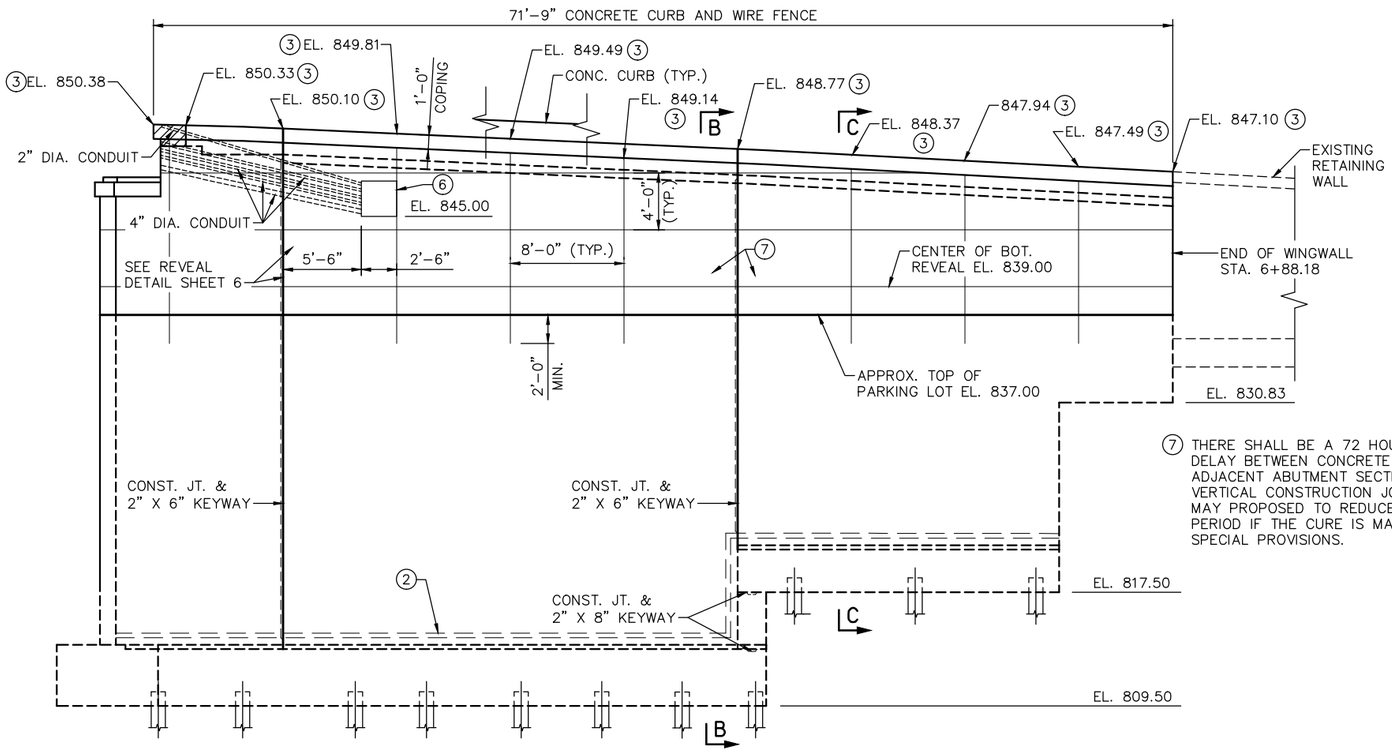

NORTHWEST WINGWALL ELEVATION

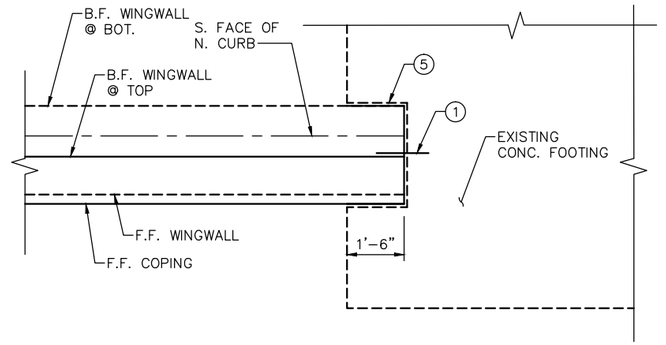

DETAIL B
EXISTING FOOTING NOTCH

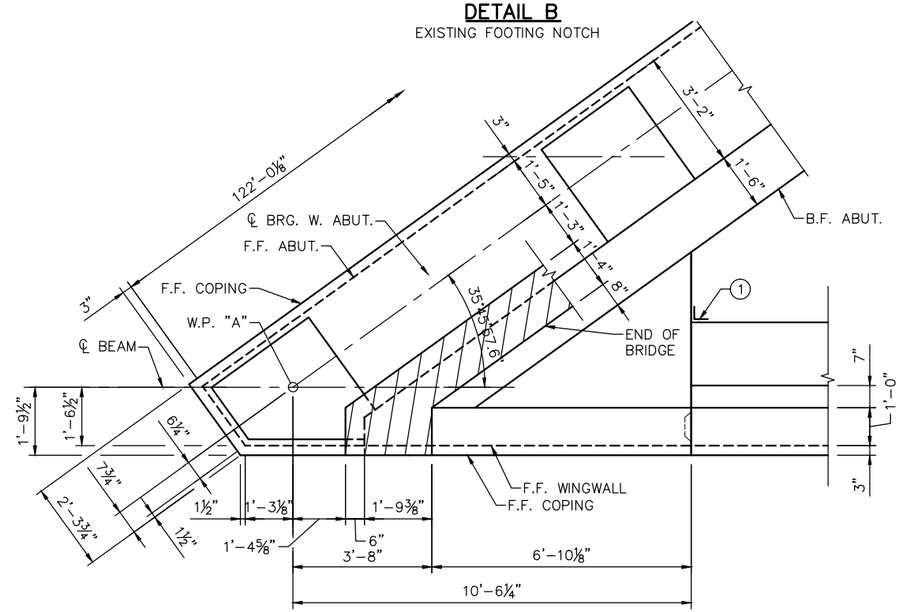

DETAIL A

NOTES:

PAVING BLOCK HATCHED AREA INDICATES THAT PORTION TO BE PLACED WITH THE SUPERSTRUCTURE CONCRETE.

SEE SHEET 6 FOR SECTIONS B–B & C–C.

(1) MEMBRANE WATERPROOFING SYSTEM PER MnDOT 2481.3.B.

(2) PERFORATED PIPE, SEE DETAIL B910 FOR DRAINAGE DETAILS.

(3) ELEVATION AT TOP OF WINGWALL COPING.

(4) END NW WINGWALL AT FF WINGWALL AND BEGIN EXISTING RETAINING WALL AT 32.25' LT, X=525637.678, Y=168510.191.

(5) CONTRACTOR SHALL NOTCH EXISTING WALL FOOTING TO INSTALL NEW WINGWALL. LIMITS OF REMOVAL SHALL BE APPROVED BY ENGINEER IN FIELD. DISTURBANCE TO EXISTING WALL FOUNDATION MATERIAL SHALL BE KEPT TO A MINIMUM. THE CONTRACTOR IS RESPONSIBLE FOR REPAIRING FOUNDATION MATERIAL UNDER EXISTING WALL FOUNDATION.

(6) JUNCTION BOX (SEE SYSTEM WIDE ELECTRICAL PLANS). MOUNT PER MANUFACTURER'S INSTRUCTIONS.

(7) THERE SHALL BE A 72 HOUR MINIMUM TIME DELAY BETWEEN CONCRETE POURS OF ADJACENT ABUTMENT SECTIONS THAT HAVE VERTICAL CONSTRUCTION JOINTS. CONTRACTOR MAY PROPOSED TO REDUCE THE WAITING PERIOD IF THE CURE IS MAINTAINED. SEE SPECIAL PROVISIONS.

NO.	DATE	BY	CHECK	DESIGN	REVISION / SUBMITTAL

DESIGNED BY: HLR | CHECKED BY: BLF
DRAWN BY: NAO | CHECKED BY: BLF

AECOM Kimley»Horn

90% SUBMISSION - 01/22/16

METROPOLITAN COUNCIL

SOUTHWEST Green Line LRT Extension

CIVIL - VOLUME 4G
CSAH 40 (GLENWOOD AVENUE) - WEST
BRIDGE 27C16
WEST ABUTMENT DETAILS 4

DISCIPLINE: STRUCTURES
SHEET NAME: CBR27C16-BRG-ABT-001-4

SHEET 7 OF 68

Jan, 14 2016 11:07 am v:\3400_ADC\CAD\SEGMENT E4\PLAN SHEETS\STRUCTURES\27C16\CBR27C16-BRG-ABT-001.dwg By: phil.horton

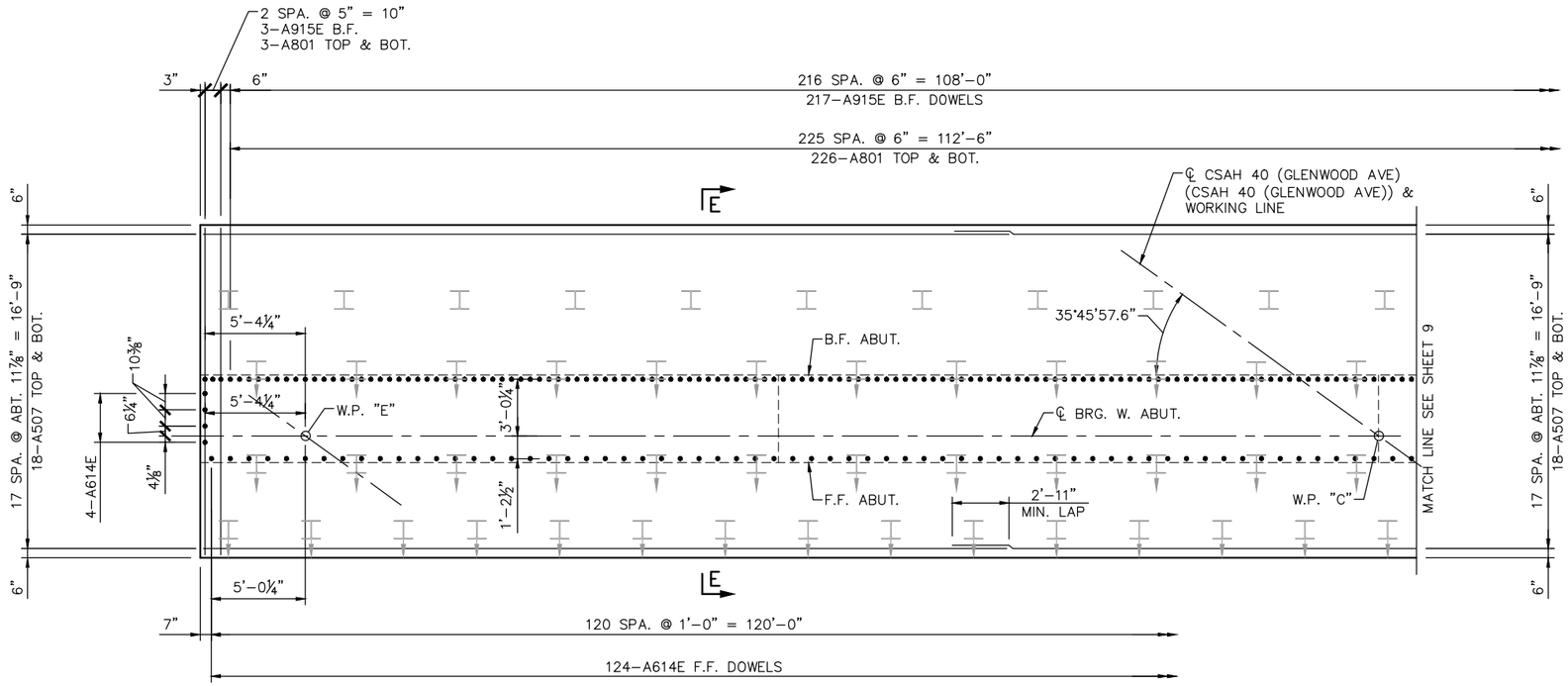

FOOTING PLAN

NOTES:

F.F. DENOTES FRONT FACE.
B.F. DENOTES BACK FACE.
E.F. DENOTES EACH FACE.

SEE SHEET 12 FOR SECTION E–E.

NO.	DATE	BY	CHECK	DESIGN	REVISION / SUBMITTAL

DESIGNED BY: HLR | CHECKED BY: BLF
DRAWN BY: PHH | CHECKED BY: BLF

AECOM Kimley»Horn

90% SUBMISSION - 01/22/16

METROPOLITAN COUNCIL

SOUTHWEST Green Line LRT Extension

CIVIL - VOLUME 4G
CSAH 40 (GLENWOOD AVENUE) - WEST
BRIDGE 27C16
WEST ABUTMENT REINFORCEMENT 1

DISCIPLINE: STRUCTURES
SHEET NAME: CBR27C16-BRG-ABT-001-5

SHEET 8 OF 68

Jan, 14 2016 11:07 am V:\3400_ADC\CAD\SEGMENT E4\PLAN SHEETS\STRUCTURES\27C16\CBR27C16-BRG-ABT-001.dwg By: phil.horton

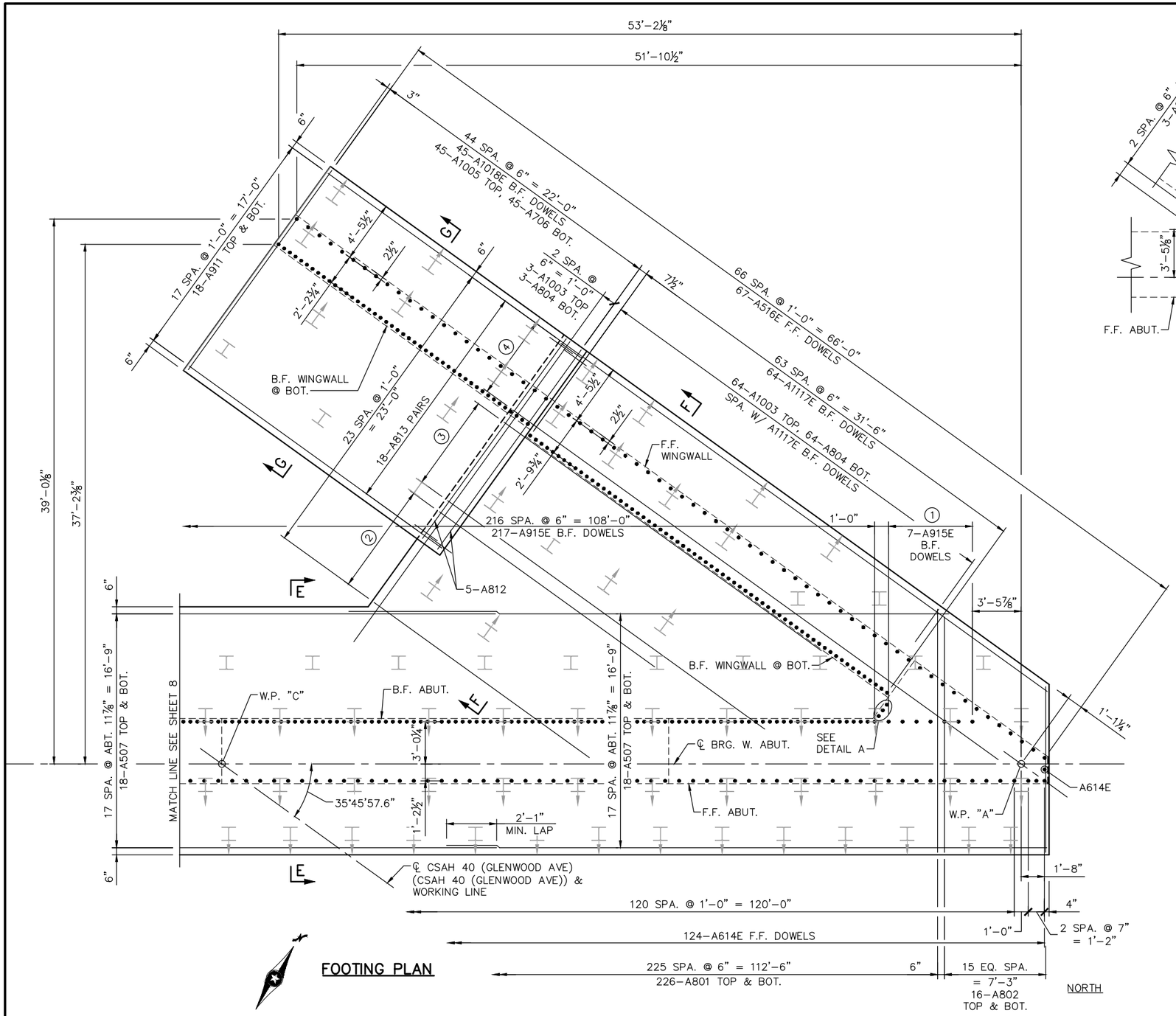

FOOTING PLAN

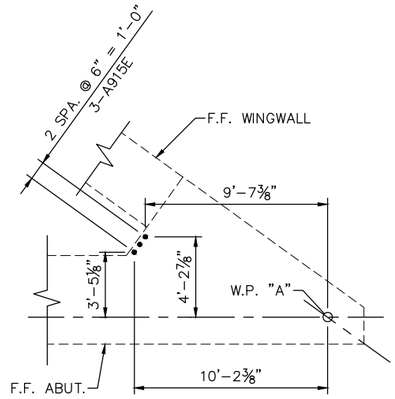

DETAIL A

NOTES:

F.F. DENOTES FRONT FACE.
B.F. DENOTES BACK FACE.
E.F. DENOTES EACH FACE.

SEE SHEET 12 FOR SECTION E-E.

SEE SHEET 13 FOR SECTION F-F.

SEE SHEET 14 FOR SECTION G-G.

① 6 SPA. @ 1'-0" = 6'-0".

② 9-A508 TOP & BOT.

③ 8-A509 TOP & BOT.

④ 7-A510 TOP & BOT.

NO.	DATE	BY	CHECK	DESIGN	REVISION / SUBMITTAL

DESIGNED BY: HLR | CHECKED BY: BLF
DRAWN BY: PHH | CHECKED BY: BLF

AECOM Kimley»Horn

90% SUBMISSION - 01/22/16

METROPOLITAN COUNCIL

SOUTHWEST Green Line LRT Extension

CIVIL - VOLUME 4G
CSAH 40 (GLENWOOD AVENUE) - WEST
BRIDGE 27C16
WEST ABUTMENT REINFORCEMENT 2

DISCIPLINE: STRUCTURES
SHEET NAME: CBR27C16-BRG-ABT-001-6

SHEET 9 OF 68

Jan, 14 2016 11:07 am V:\3400_ADC\CAD\SEGMENT E4\PLAN SHEETS\STRUCTURES\27C16\CBR27C16-BRG-ABT-001.dwg By: phil.horton

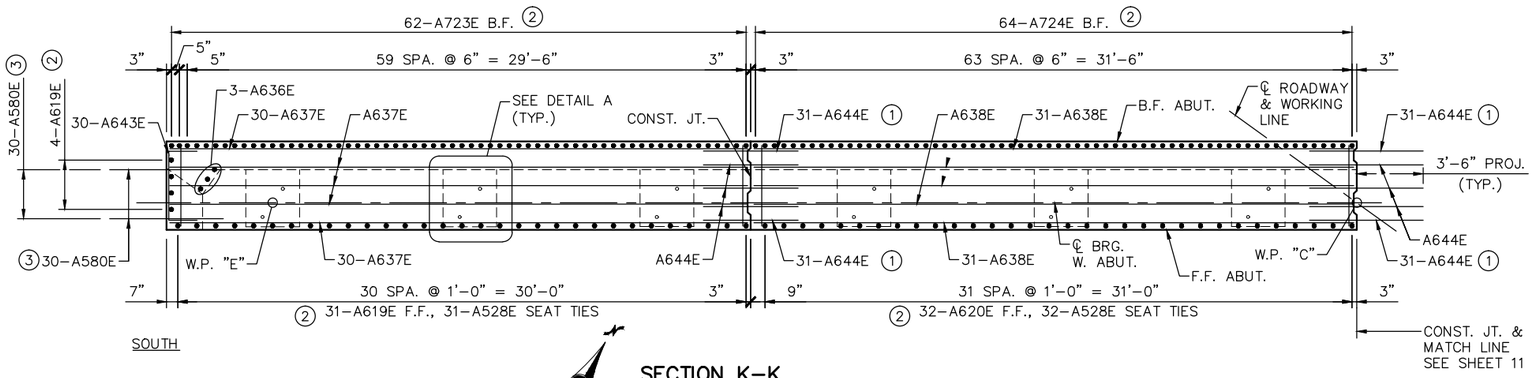

SECTION K–K

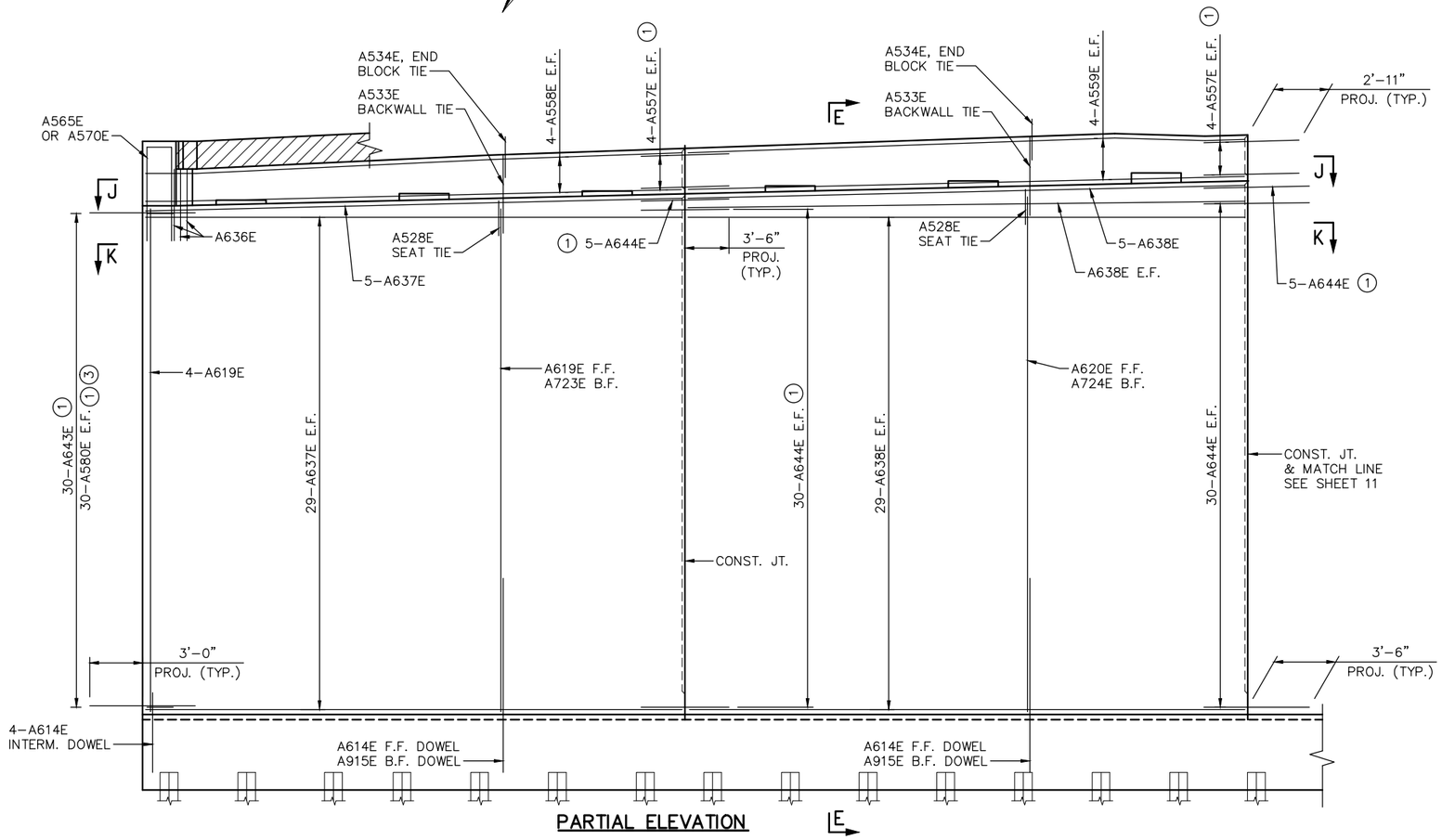

PARTIAL ELEVATION

NOTES:

F.F. DENOTES FRONT FACE.
B.F. DENOTES BACK FACE.
E.F. DENOTES EACH FACE.

PAVING BLOCK HATCHED AREA INDICATES THAT PORTION TO BE PLACED WITH THE SUPERSTRUCTURE CONCRETE.

SEE SHEET 12 FOR SECTION E–E & J–J.

SEE THIS SHEET FOR SECTION K–K.

(1) SPACED WITH HORIZONTAL REINFORCEMENT.

(2) SPACED WITH FOOTING DOWELS.

(3) CONSTRUCTION JOINT DOWELS INTO PROPOSED RTW–E411. PROJECT A580E BARS 3'–0" FROM FACE OF ABUTMENT. SEE RTW PLANS FOR RTW STEM THICKNESS AND BACKFACE TAPER.

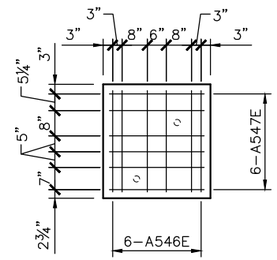

DETAIL A

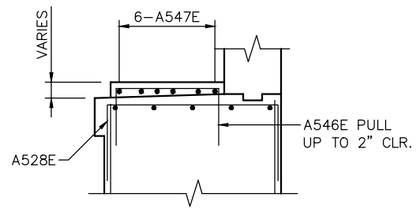

SECTION THRU PAD

NO.	DATE	BY	CHECK	DESIGN	REVISION / SUBMITTAL

DESIGNED BY: HLR CHECKED BY: BLF
DRAWN BY: PHH CHECKED BY: BLF

AECOM Kimley»Horn

90% SUBMISSION - 01/22/16

METROPOLITAN COUNCIL

SOUTHWEST Green Line LRT Extension

CIVIL - VOLUME 4G
CSAH 40 (GLENWOOD AVENUE) - WEST
BRIDGE 27C16
WEST ABUTMENT REINFORCEMENT 3

DISCIPLINE: STRUCTURES
SHEET NAME: CBR27C16-BRG-ABT-001-7

SHEET 10 OF 68

Jan, 14 2016 11:07 am v:\3400_ADC\CAD\SEGMENT E4\PLAN SHEETS\STRUCTURES\27C16\CBR27C16-BRG-ABT-001.dwg By: phil.horton

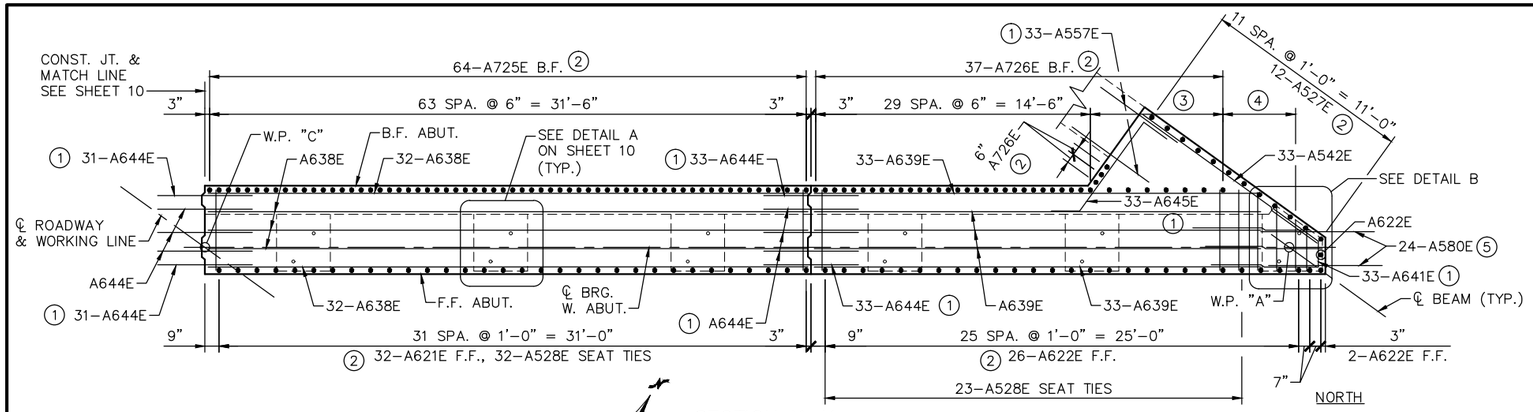

SECTION K–K

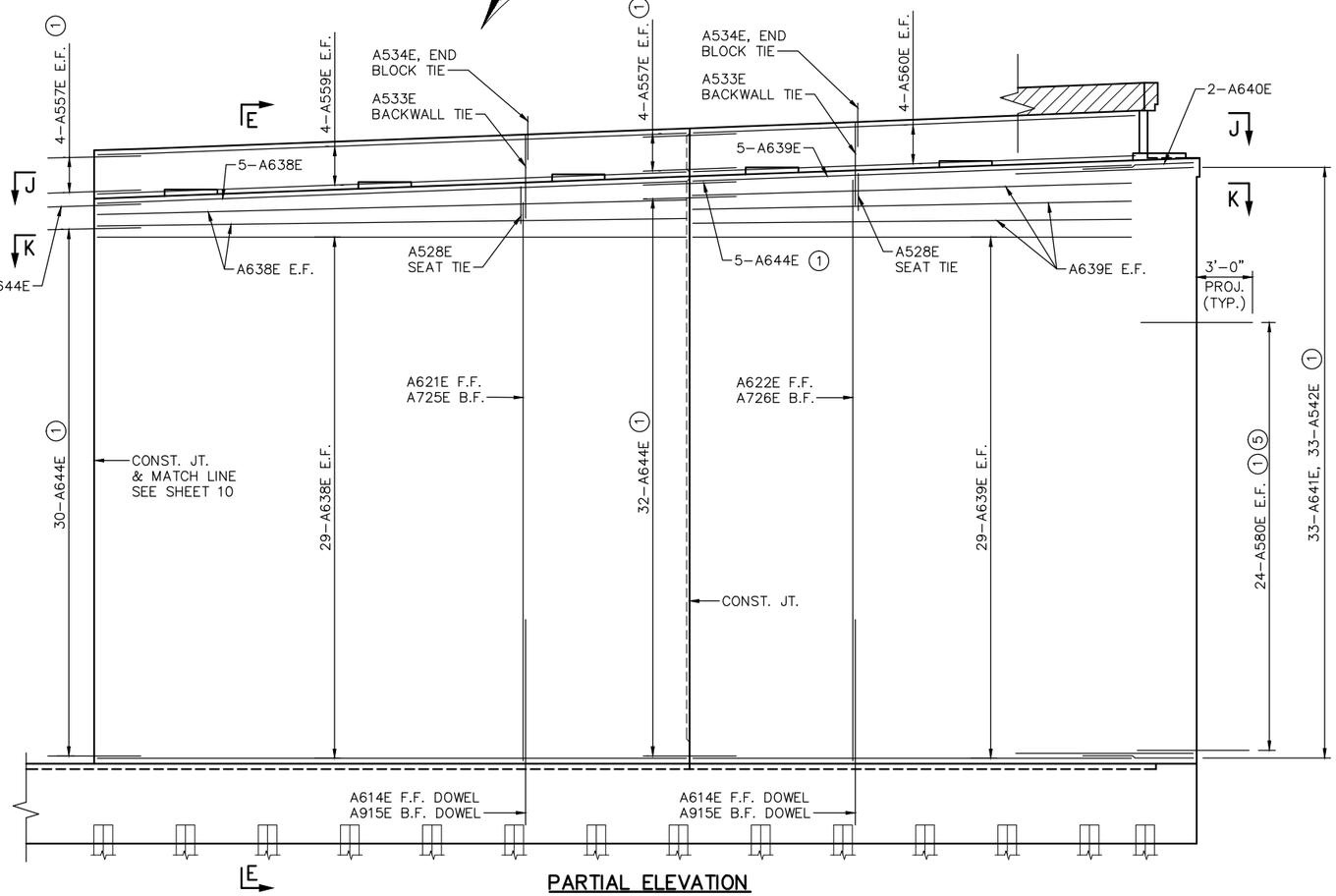

PARTIAL ELEVATION

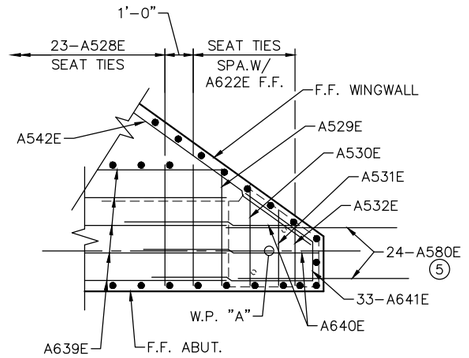

NORTH END DETAIL

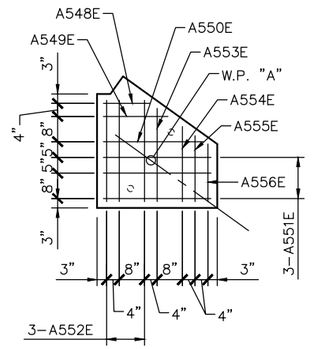

DETAIL B

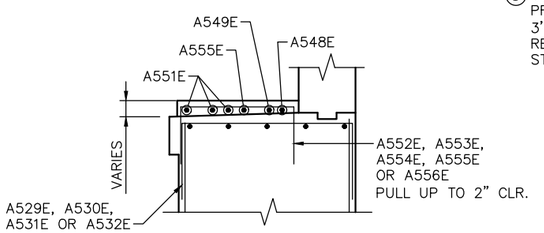

SECTION THRU PAD

@ DETAIL B

NOTES:

F.F. DENOTES FRONT FACE.
B.F. DENOTES BACK FACE.
E.F. DENOTES EACH FACE.

SEE SHEET 12 FOR SECTION E–E & J–J.

SEE THIS SHEET FOR SECTION K–K.

PAVING BLOCK HATCHED AREA INDICATES THAT PORTION TO BE PLACED WITH THE SUPERSTRUCTURE CONCRETE.

(1) SPACED WITH HORIZONTAL REINFORCEMENT.

(2) SPACED WITH FOOTING DOWELS.

(3) 7 SPA. @ 1'–0" = 7'–0"

(4) 4 SPA. @ 1'–0" = 4'–0"

(5) CONSTRUCTION JOINT DOWELS INTO PROPOSED RTW–E412. PROJECT A580E BARS 3'–0" FROM FACE OF ABUTMENT. SEE RETAINING WALL PLANS FOR RETAINING WALL STEM THICKNESS AND BACKFACE TAPER.

NO.	DATE	BY	CHECK	DESIGN	REVISION / SUBMITTAL

DESIGNED BY: HLR | CHECKED BY: BLF
DRAWN BY: PHH | CHECKED BY: BLF

AECOM Kimley»Horn

90% SUBMISSION - 01/22/16

METROPOLITAN COUNCIL

SOUTHWEST Green Line LRT Extension

CIVIL - VOLUME 4G
CSAH 40 (GLENWOOD AVENUE) - WEST
BRIDGE 27C16
WEST ABUTMENT REINFORCEMENT 4

DISCIPLINE: STRUCTURES
SHEET NAME: CBR27C16-BRG-ABT-001-8

SHEET 11 OF 68

Jan, 14 2016 11:07 am V:\3400_ADC\CAD\SEGMENT E4\PLAN SHEETS\STRUCTURES\27C16\CBR27C16-BRG-ABT-001.dwg By: phil.horton

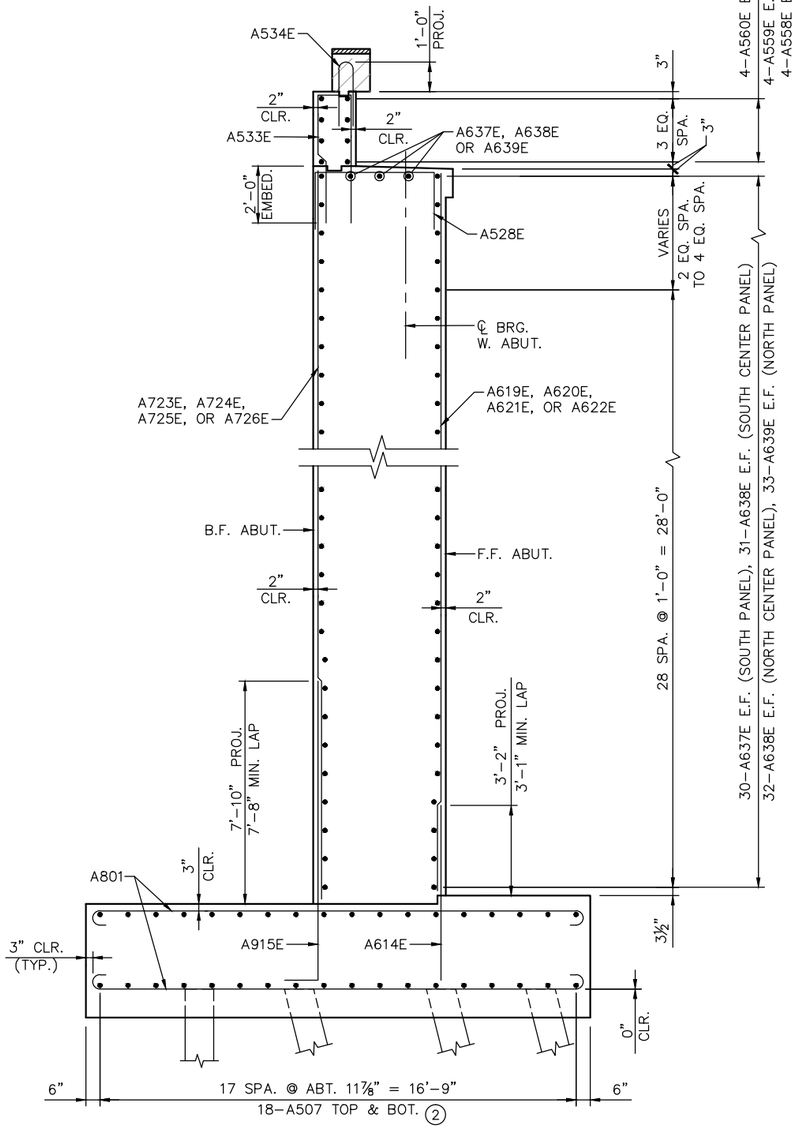

SECTION E–E

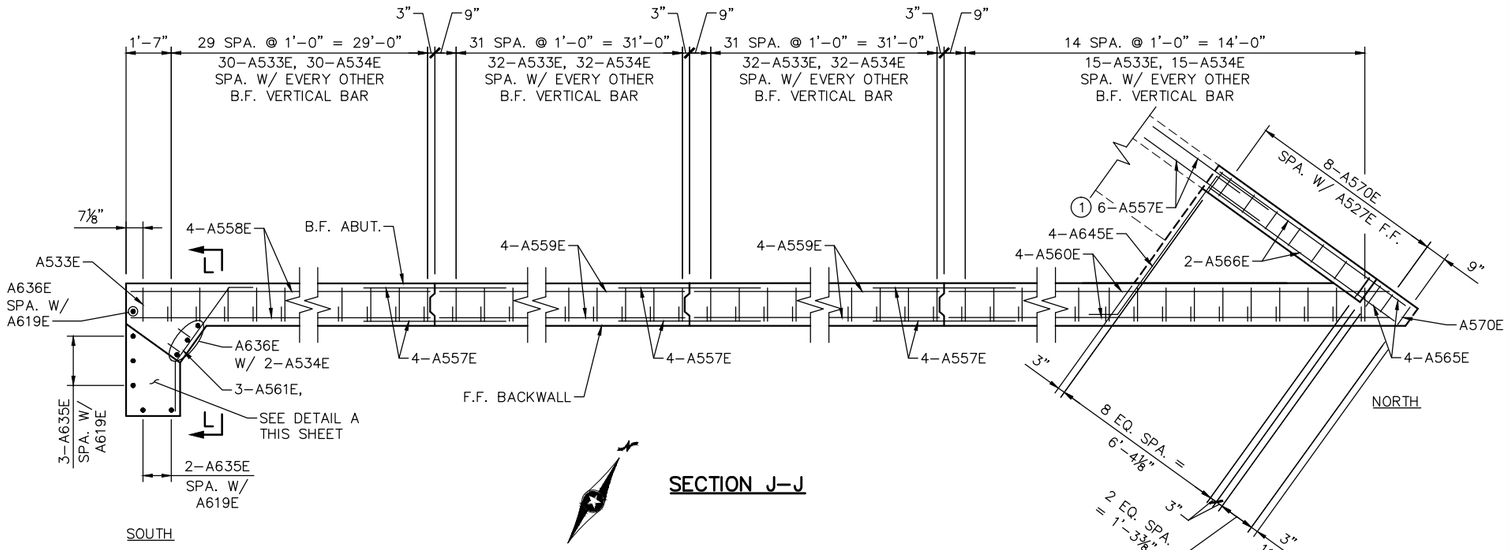

SECTION J–J

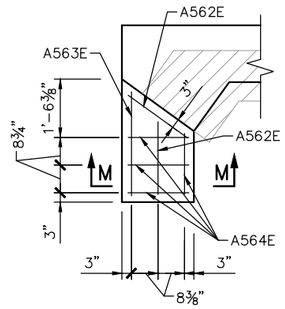

DETAIL A

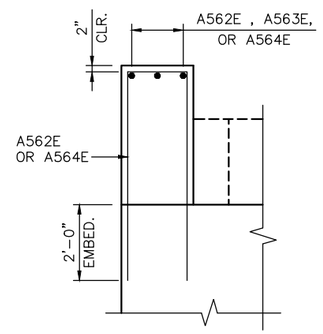

SECTION M–M

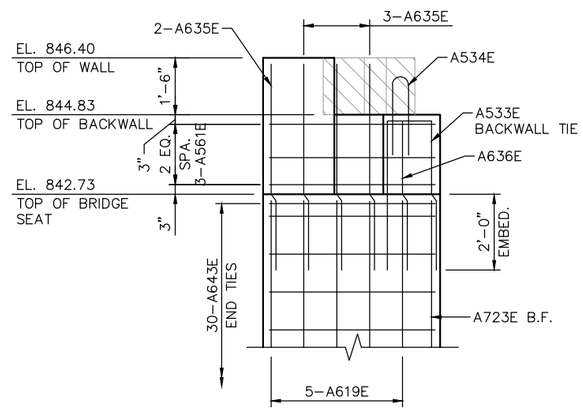

VIEW L–L

NOTES:

F.F. DENOTES FRONT FACE.
B.F. DENOTES BACK FACE.
E.F. DENOTES EACH FACE.

SEE SHEET 10 & 11 FOR SECTION J–J.

SEE SHEETS 8 THRU 11 FOR SECTION E–E.

SEE THIS SHEET FOR VIEW L–L & SECTION M–M.

PAVING BLOCK HATCHED AREA INDICATES THAT PORTION TO BE PLACED WITH THE SUPERSTRUCTURE CONCRETE.

(1) SPACED WITH HORIZONTAL REINFORCEMENT.

(2) 18 TOTAL LINES TOP & BOTTOM WITH 3–A507 PER LINE.

NO.	DATE	BY	CHECK	DESIGN	REVISION / SUBMITTAL

DESIGNED BY: HLR | CHECKED BY: BLF
DRAWN BY: PHH | CHECKED BY: BLF

AECOM Kimley»Horn

90% SUBMISSION - 01/22/16

METROPOLITAN COUNCIL

SOUTHWEST Green Line LRT Extension

CIVIL - VOLUME 4G
CSAH 40 (GLENWOOD AVENUE) - WEST
BRIDGE 27C16
WEST ABUTMENT REINFORCEMENT 5

DISCIPLINE: STRUCTURES
SHEET NAME: CBR27C16-BRG-ABT-001-9

SHEET 12 OF 68

Jan, 18 2016 08:47 am V:\3400_ADC\CAD\SEGMENT E4\PLAN SHEETS\STRUCTURES\27C16\CBR27C16-BRG-ABT-001.dwg By: phil.horton

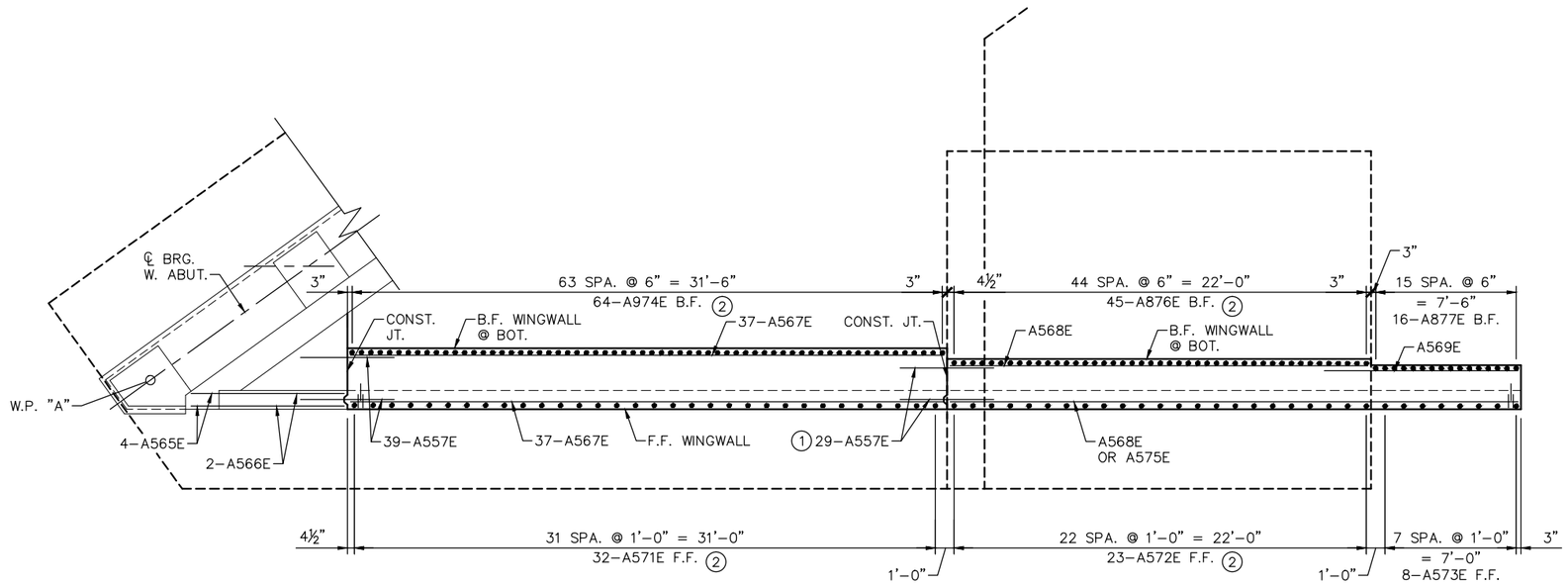

NORTHWEST WINGWALL PLAN

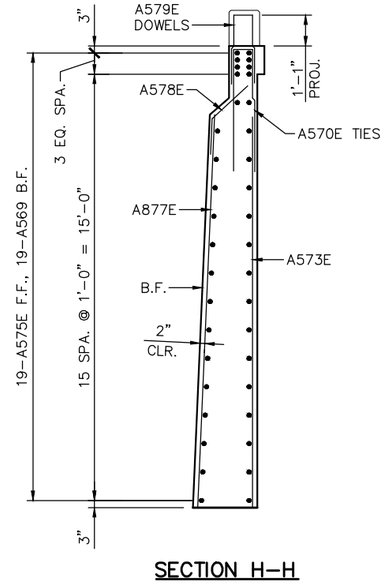

SECTION H-H

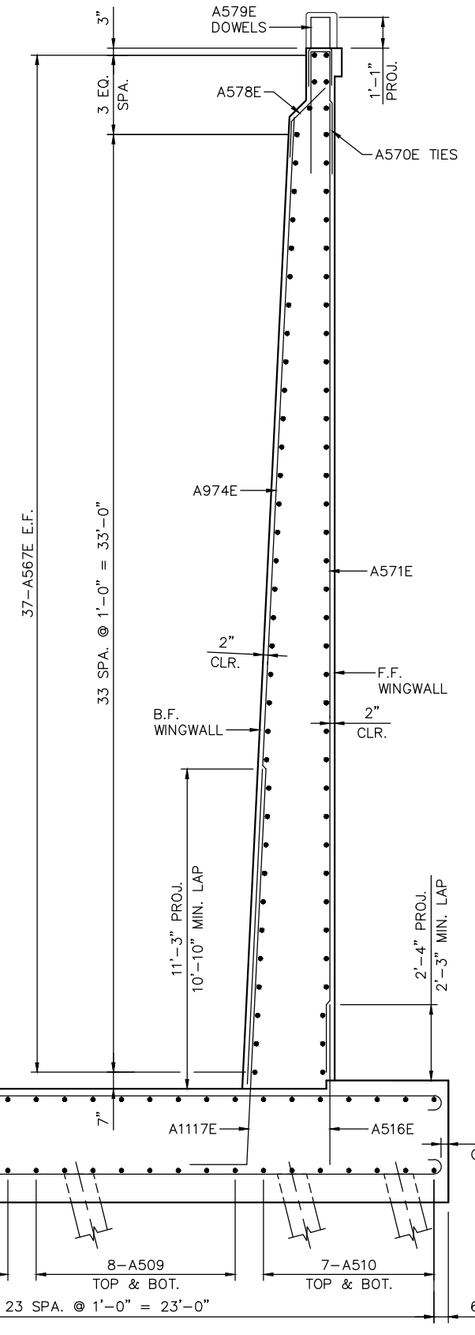

SECTION F-F

NOTES:

F.F. DENOTES FRONT FACE.
B.F. DENOTES BACK FACE.
E.F. DENOTES EACH FACE.

SEE SHEET 14 FOR LOCATION OF SECTION F-F AND H-H.

SEE THIS SHEET FOR SECTION L-L.

(1) SPACED WITH HORIZONTAL REINFORCEMENT.

(2) SPACED WITH FOOTING DOWELS.

NO.	DATE	BY	CHECK	DESIGN	REVISION / SUBMITTAL

DESIGNED BY: HLR CHECKED BY: BLF
DRAWN BY: PHH CHECKED BY: BLF

AECOM Kimley»Horn

90% SUBMISSION - 01/22/16

METROPOLITAN COUNCIL

SOUTHWEST Green Line LRT Extension

CIVIL - VOLUME 4G
CSAH 40 (GLENWOOD AVENUE) - WEST
BRIDGE 27C16
WEST ABUTMENT REINFORCEMENT 6

DISCIPLINE: STRUCTURES
SHEET NAME: CBR27C16-BRG-ABT-001-10

SHEET 13 OF 68

Jan, 14 2016 11:07 am V:\3400_ADC\CAD\SEGMENT E4\PLAN SHEETS\STRUCTURES\27C16\CBR27C16-BRG-ABT-001.dwg By: phil.horton

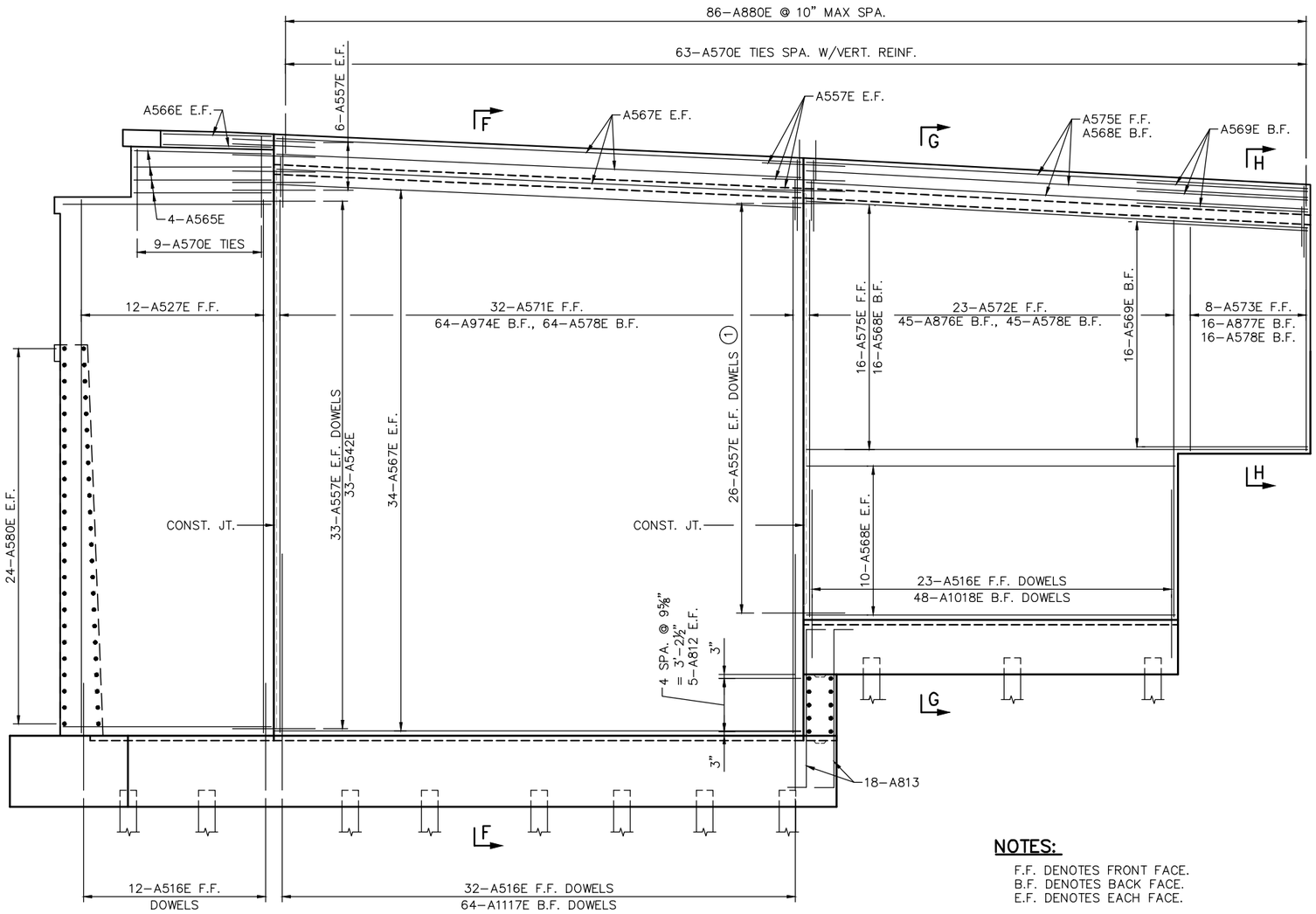

NORTHWEST WINGWALL ELEVATION

NOTES:

F.F. DENOTES FRONT FACE.
B.F. DENOTES BACK FACE.
E.F. DENOTES EACH FACE.

SEE SHEET 13 FOR SECTIONS F–F & H–H.

(1) SPACED WITH HORIZONTAL REINFORCEMENT.

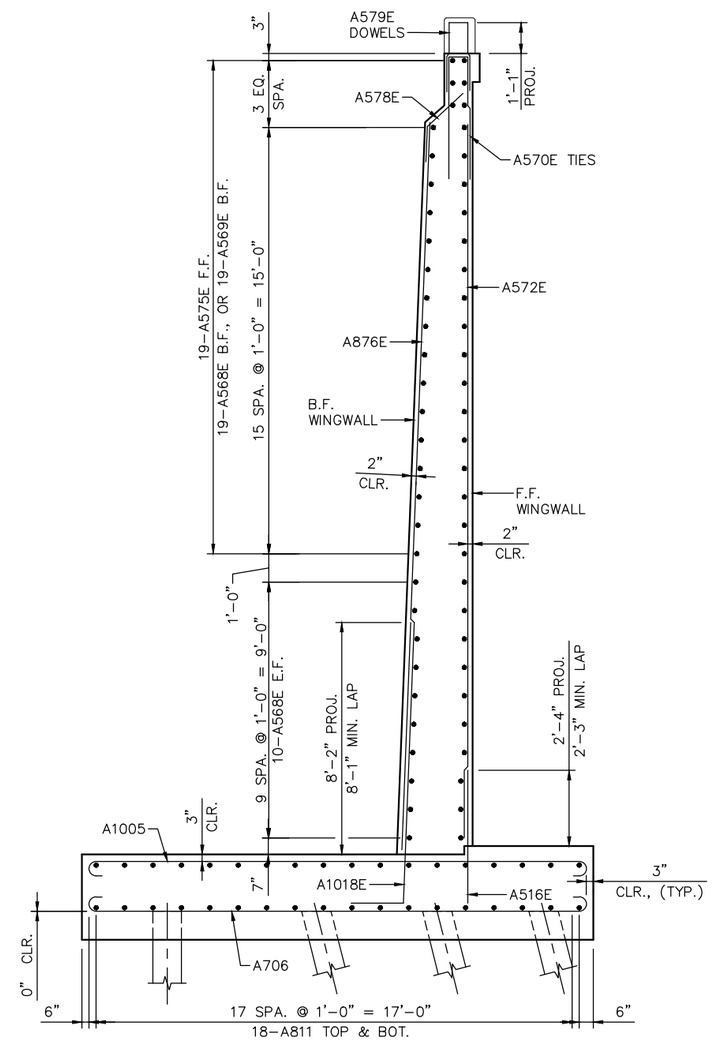

SECTION G–G

NO.	DATE	BY	CHECK	DESIGN	REVISION / SUBMITTAL

DESIGNED BY: HLR | CHECKED BY: BLF
DRAWN BY: PHH | CHECKED BY: BLF

AECOM Kimley»Horn

90% SUBMISSION - 01/22/16

METROPOLITAN COUNCIL

SOUTHWEST Green Line LRT Extension

CIVIL - VOLUME 4G
CSAH 40 (GLENWOOD AVENUE) - WEST
BRIDGE 27C16
WEST ABUTMENT REINFORCEMENT 7

DISCIPLINE: STRUCTURES
SHEET NAME: CBR27C16-BRG-ABT-001-11

SHEET 14 OF 68

Jan, 14 2016 11:07 am V:\3400_ADC\CAD\SEGMENT E4\PLAN SHEETS\STRUCTURES\27C16\CBR27C16-BRG-ABT-001.dwg By: phil.horton

BILL OF REINFORCEMENT FOR WEST ABUTMENT

BAR	NO.	LENGTH	SHAPE	LOCATION
A801	0	'-"	BENT	FOOTING, TRANS. TOP & BOT.
A802		'- "	BENT	FOOTING, TRANS. TOP & BOT.
A1003		'-"	BENT	FOOTING, TRANS. TOP
A804		'-"	BENT	FOOTING, TRANS. TOP BOT.
A1005	0	'-"	BENT	FOOTING, TRANS. TOP
A706	0	'-"	BENT	FOOTING, TRANS. BOT.
A507	0	'-"	STR.	FOOTING, LONG. TOP & BOT.
A508	0	'-"	STR.	FOOTING, LONG. TOP & BOT.
A509	0	'-"	STR.	FOOTING, LONG. TOP & BOT.
A510	0	'-"	STR.	FOOTING, LONG. TOP & BOT.
A811		'- "	STR.	FOOTING, LONG. TOP & BOT.
A812	0	'-"	STR.	FOOTING, TRANS. TOP & BOT.
A813	0	'-"	BENT	FOOTING STEP, VERT. E.F.
A614E	0	'-"	STR.	FOOTING, F.F. DOWELS
A915E	0	'-"	BENT	FOOTING, B.F. DOWELS
A516E	0	'-"	STR.	FOOTING, F.F. DOWELS
A1117E	0	'-"	BENT	FOOTING, B.F. DOWELS
A1018E	0	'-"	BENT	FOOTING, B.F. DOWELS
A619E	0	'-"	STR.	STEM, VERT. F.F.
A620E	0	'-"	STR.	STEM, VERT. F.F.
A621E	0	'-"	STR.	STEM, VERT. F.F.
A622E	0	'-"	STR.	STEM, VERT. F.F.
A723E	0	'-"	STR.	STEM, VERT. B.F.
A724E	0	'-"	STR.	STEM, VERT. B.F.
A725E	0	'-"	STR.	STEM, VERT. B.F.
A726E	0	'-"	STR.	STEM, VERT. B.F.
A527E	0	'-"	STR.	STEM, VERT. F.F.
A528E	0	'-"	BENT	STEM, SEAT TIE
A529E	0	'-"	BENT	STEM, SEAT TIE
A530E	0	'-"	BENT	STEM, SEAT TIE
A531E	0	'-"	BENT	STEM, SEAT TIE
A532E	0	'-"	BENT	STEM, SEAT TIE.
A533E	0	'-"	BENT	BACKWALL TIE
A534E	0	'-"	BENT	END BLOCK TIE
A635E	0	'-"	STR.	BACKWALL, VERT.
A636E	0	'-"	STR.	BACKWALL, VERT.
A637E	0	'-"	STR.	STEM, HORIZ. E.F.
A638E	0	'-"	STR.	STEM, HORIZ. E.F.
A639E	0	'-"	STR.	STEM, HORIZ. B.F.
A640E	0	'-"	STR.	STEM, HORIZ. E.F.

BILL OF REINFORCEMENT FOR WEST ABUTMENT

BAR	NO.	LENGTH	SHAPE	LOCATION
A641E	0	'-"	BENT	STEM, HORIZ. TIE
A542E	0	'-"	STR.	STEM, HORIZ. B.F.
A643E	0	'-"	BENT	STEM, HORIZ. TIE
A644E	0	'-"	STR.	STEM, HORIZ. E.F.
A645E	0	'-"	BENT	STEM, HORIZ. B.F.
A546E	0	'-"	BENT	BEAM SEAT TIE
A547E	0	'-"	BENT	BEAM SEAT TIE
A548E	0	'-"	BENT	BEAM SEAT TIE
A549E	0	'-"	BENT	BEAM SEAT TIE
A550E	0	'-"	BENT	BEAM SEAT TIE
A551E	0	'-"	BENT	BEAM SEAT TIE
A552E	0	'-"	BENT	BEAM SEAT TIE
A553E	0	'-"	BENT	BEAM SEAT TIE
A554E	0	'-"	BENT	BEAM SEAT TIE
A555E	0	'-"	BENT	BEAM SEAT TIE
A556E	0	'-"	BENT	BEAM SEAT TIE
A557E	0	'-"	STR.	HORIZ. C.J. DOWEL
A558E	0	'-"	STR.	BACKWALL, HORIZ. E.F.
A559E	0	'-"	STR.	BACKWALL, HORIZ. E.F.
A560E	0	'-"	STR.	BACKWALL, HORIZ. E.F.
A561E	0	'-"	BENT	BACKWALL, HORIZ.
A562E	0	'-"	BENT	BACKWALL, TIE
A563E	0	'-"	BENT	BACKWALL, TIE
A564E	0	'-"	BENT	BACKWALL, TIE
A565E	0	'-"	STR.	NW WW, HORIZ.
A566E	0	'-"	STR.	NW WW, HORIZ.
A567E	0	'-"	STR.	NW WW, HORIZ. E.F.
A568E	0	'-"	STR.	NW WW, HORIZ. F.F.
A569E	0	'-"	STR.	NW WW, HORIZ. B.F.
A570E	0	'-"	BENT	NW WW, VERT. TIE
A571E	0	'-"	STR.	NW WW, VERT. F.F.
A572E	0	'-"	STR.	NW WW, VERT. F.F.
A573E	0	'-"	STR.	NW WW, VERT. F.F.
A974E	0	'-"	STR.	SE WW, VERT. B.F.
A575E	0	'-"	STR.	NW WW, HORIZ. F.F.
A576E	0	'-"	STR.	NW WW, VERT. B.F.
A877E	0	'-"	STR.	NW WW, VERT. B.F.
A878E	0	'-"	STR.	NW WW, VERT. B.F.
A579E	0	'-"	BENT	END BLOCK TIE
A580E	0	'-"	STR.	CONST. JT. DOWEL
A581E	0	'-"	STR.	RTW WALL DOWEL

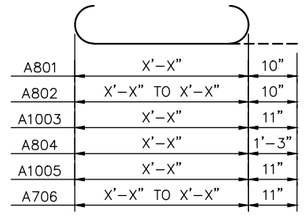

A801, A802, A1003, A804, A1005 & A706

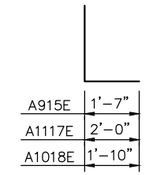

A915E, A1117E, & A1018E

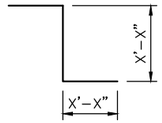

A813

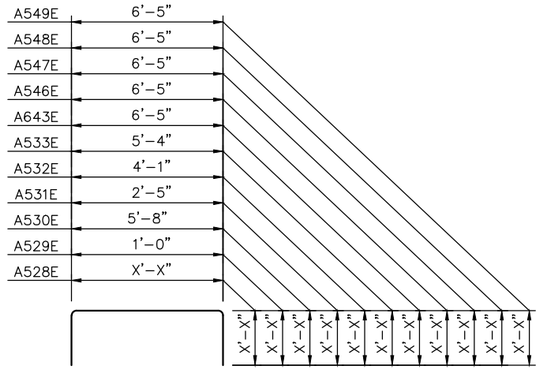

A528E, A529E, A530E, A531E, A532E, A533E, A643E, A546E, A547E, A548E, & A549E

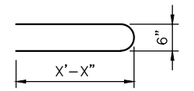

A534E

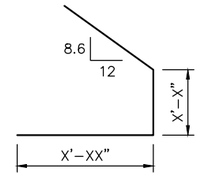

A641E

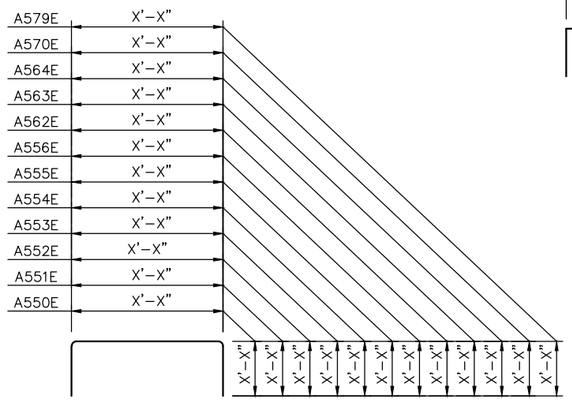

A550E, A551E, A552E, A553E, A554E, A555E, A556E, A562E, A563E, A564E, A570E, & A579E

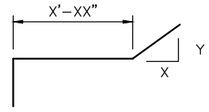

A645E

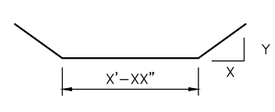

A561E

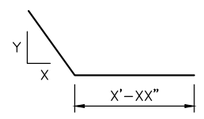

A578E

NO.	DATE	BY	CHECK	DESIGN	REVISION / SUBMITTAL

DESIGNED BY: HLR | CHECKED BY: BLF
DRAWN BY: PHH | CHECKED BY: BLF

AECOM Kimley»Horn

90% SUBMISSION - 01/22/16

METROPOLITAN COUNCIL

SOUTHWEST Green Line LRT Extension

CIVIL - VOLUME 4G
CSAH 40 (GLENWOOD AVENUE) - WEST
BRIDGE 27C16
WEST ABUTMENT REINFORCEMENT 8

DISCIPLINE: STRUCTURES
SHEET NAME: CBR27C16-BRG-ABT-001-12

SHEET 15 OF 68

Jan, 14 2016 11:07 am v:\3400_ADC\CAD\SEGMENT E4\PLAN SHEETS\STRUCTURES\27C16\CBR27C16-BRG-ABT-001.dwg By: phil.horton

WEST PIER COMPUTED PILE LOAD - TONS/PILE	
FACTORED DEAD LOAD	40.8
FACTORED LIVE LOAD	9.6
FACTORED OVERTURNING	43.2
* FACTORED DESIGN LOAD	93.6
* BASED ON STRENGTH I LOAD COMBINATION.	

WEST PIER REQUIRED NOMINAL PILE BEARING RESISTANCE FOR H-PILES Rn - TONS/PILE		
FIELD CONTROL METHOD	φdyn	* Rn
MN/DOT PILE FORMULA 2012 (MPF12) $R_n = 20\sqrt{\frac{W\,x\,H}{1000}}\,x\log\left(\frac{10}{S}\right)$	0.60	155.9
PDA	0.65	143.9
* Rn = (FACTORED DESIGN LOAD) / φdyn		

GENERAL PILE NOTES

2 HP12x53 STEEL TEST PILES 70 FT. LONG
38 HP12x53 STEEL PILES EST. 60 FT. LENGTH
40 HP12x53 STEEL PILES REQ'D FOR WEST PIER

ALL PILES TO BE HP12x53 WITH PILE TIP PROTECTION.

PILE SPACING SHOWN IS AT BOTTOM OF FOOTING.

FOR PILE SPLICE DETAILS SEE DETAIL B202.

PILES MARKED WITH STUDS ARE TO HAVE SHEAR STUDS PER DETAIL "A". ALL PILE SPLICES SHALL BE WELDED ON MARKED PILES.

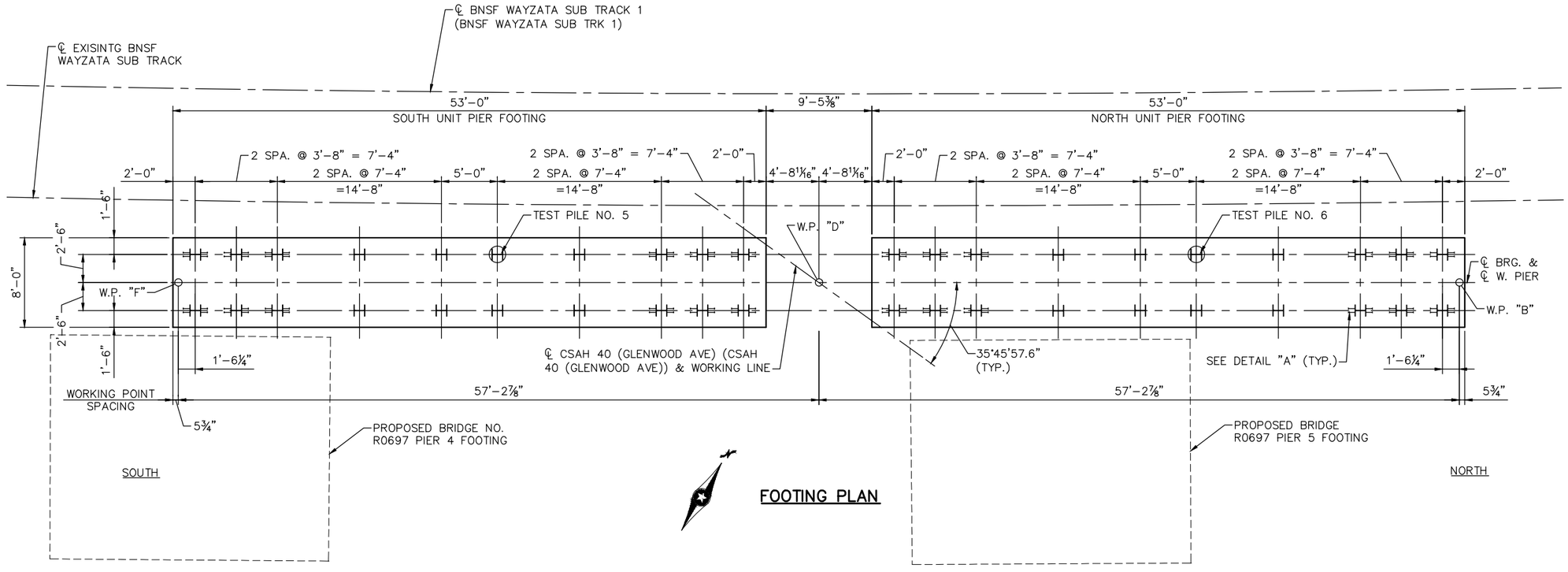

FOOTING PLAN

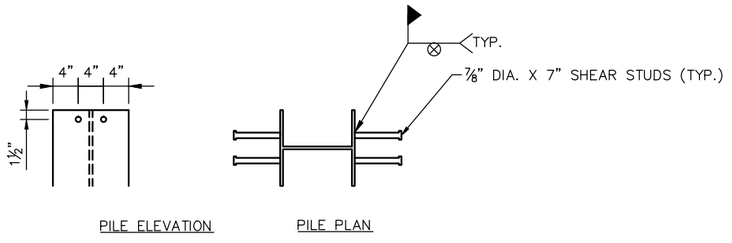

PILE ELEVATION PILE PLAN

DETAIL "A"

NO.	DATE	BY	CHECK	DESIGN	REVISION / SUBMITTAL

DESIGNED BY: RHK CHECKED BY: JBW
DRAWN BY: RHK CHECKED BY: JBW

AECOM Kimley»Horn

90% SUBMISSION - 01/22/16

METROPOLITAN COUNCIL
SOUTHWEST Green Line LRT Extension

CIVIL - VOLUME 4G
CSAH 40 (GLENWOOD AVENUE) - WEST
BRIDGE 27C16
WEST PIER DETAILS 1

DISCIPLINE: STRUCTURES
SHEET NAME: CBR27C16-BRG-PIR-001-1

SHEET 16 OF 68

Jan. 14 2016 11:08 am V:\3400_ADC\CAD\SEGMENT E4\PLAN SHEETS\STRUCTURES\27C16\CBR27C16-BRG-PIR-001.dwg By: phil.horton

NOTES:

(1) DIMENSIONS MEASURED ALONG ℄ WEST PIER.

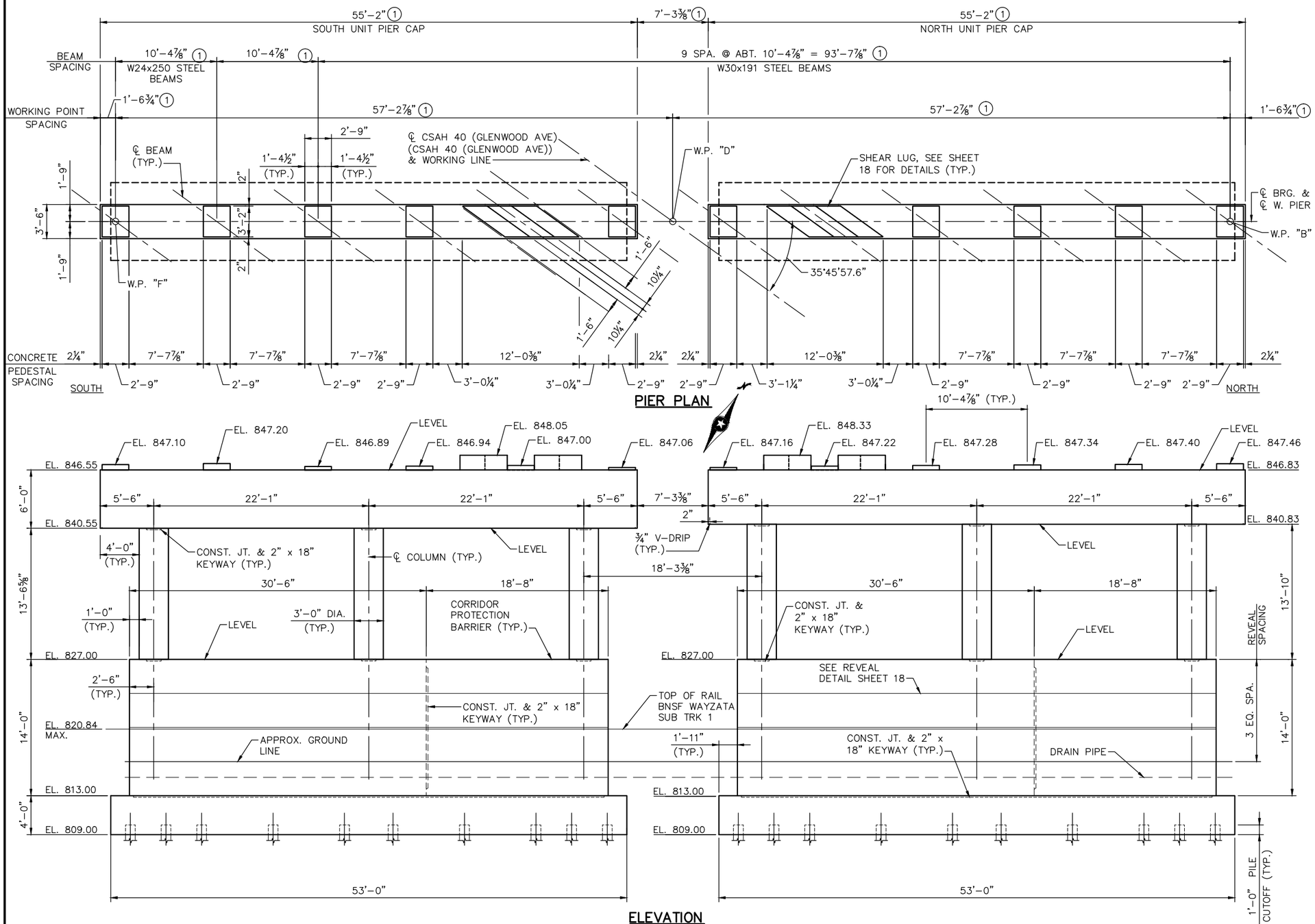

PIER PLAN

ELEVATION

END ELEVATION

NO.	DATE	BY	CHECK	DESIGN	REVISION / SUBMITTAL

DESIGNED BY: RHK | CHECKED BY: JBW
DRAWN BY: RHK | CHECKED BY: JBW

AECOM Kimley»Horn

METROPOLITAN COUNCIL

SOUTHWEST Green Line LRT Extension

90% SUBMISSION - 01/22/16

CIVIL - VOLUME 4G
CSAH 40 (GLENWOOD AVENUE) - WEST
BRIDGE 27C16
WEST PIER DETAILS 2

DISCIPLINE: STRUCTURES
SHEET NAME: CBR27C16-BRG-PIR-001-2

SHEET 17 OF 68

Jan, 14 2016 11:08 am V:\3400_ADC\CAD\SEGMENT E4\PLAN SHEETS\STRUCTURES\27C16\CBR27C16-BRG-PIR-001.dwg By: phil.horton

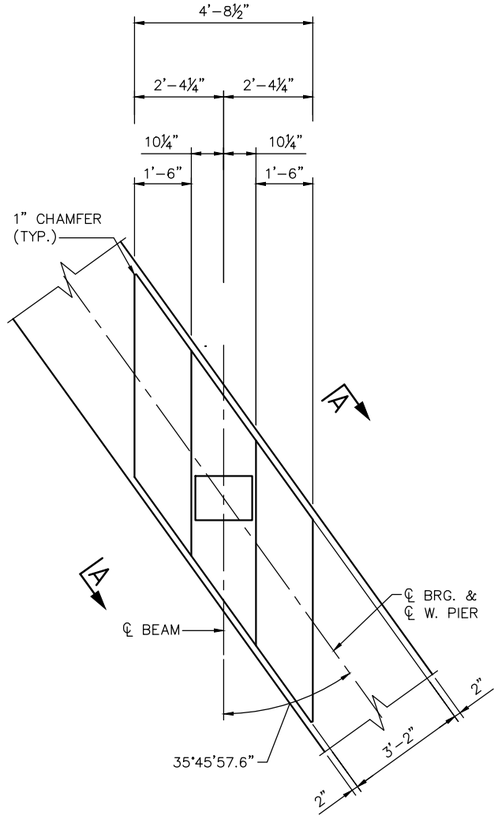

SHEAR LUG PLAN

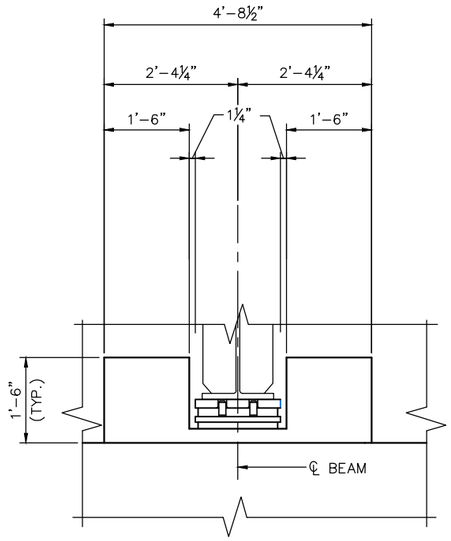

SHEAR LUG ELEVATION

DIMENSIONS MEASURED PERPENDICULAR TO ℄ BEAM

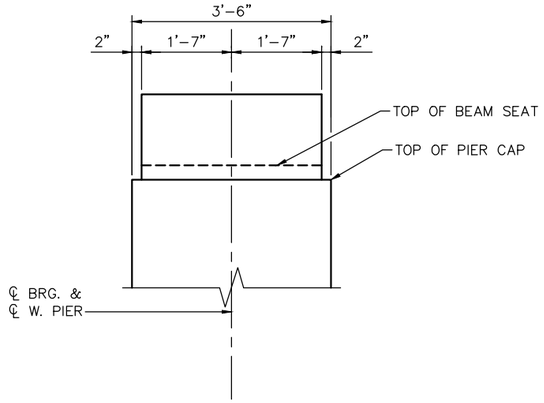

SECTION A-A

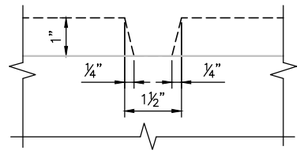

REVEAL DETAIL

Jan, 14 2016 11:08 am V:\3400_ADC\CAD\SEGMENT E4\PLAN SHEETS\STRUCTURES\27C16\CBR27C16-BRG-PIR-001.dwg By: phil.horton

NO.	DATE	BY	CHECK	DESIGN	REVISION / SUBMITTAL

DESIGNED BY: RHK | CHECKED BY: JBW
DRAWN BY: RHK | CHECKED BY: JBW

AECOM Kimley»Horn

90% SUBMISSION - 01/22/16

METROPOLITAN COUNCIL

SOUTHWEST Green Line LRT Extension

CIVIL - VOLUME 4G
CSAH 40 (GLENWOOD AVENUE) - WEST
BRIDGE 27C16
WEST PIER DETAILS 3

DISCIPLINE: STRUCTURES

SHEET NAME: CBR27C16-BRG-PIR-001-3

SHEET 18 OF 68

NOTES:

SEE SHEET 21 FOR SECTION A–A & B–B.

SEE SHEET 20 FOR SECTION C–C, DETAIL A, & DETAIL B.

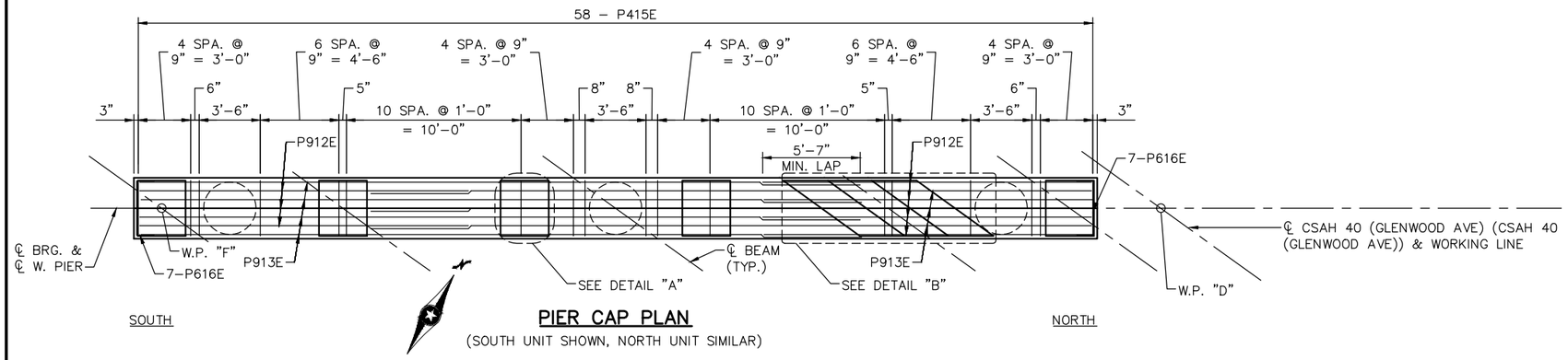

PIER CAP PLAN

(SOUTH UNIT SHOWN, NORTH UNIT SIMILAR)

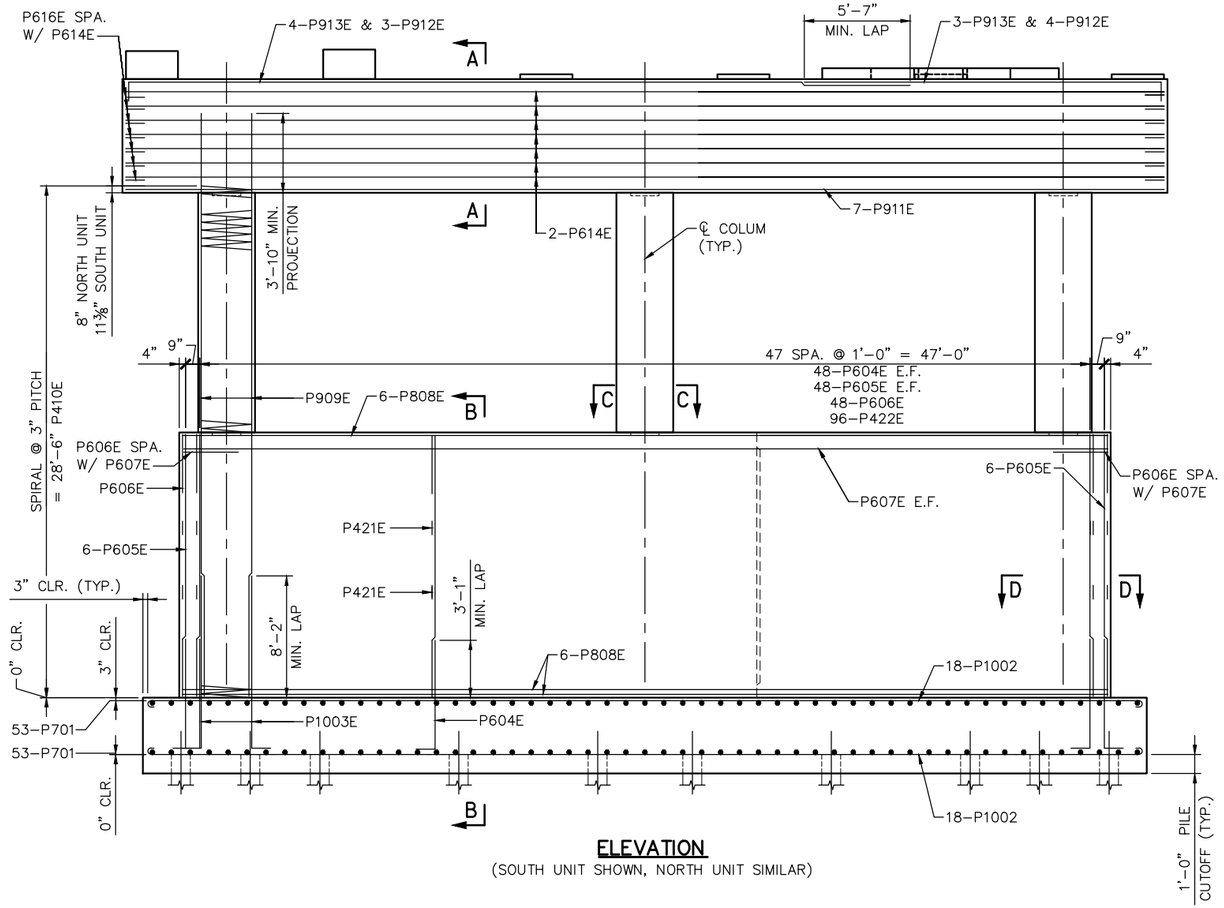

ELEVATION

(SOUTH UNIT SHOWN, NORTH UNIT SIMILAR)

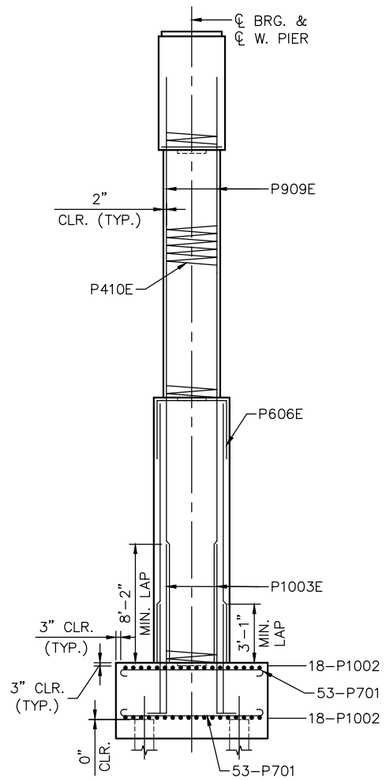

END ELEVATION

LONGITUDINAL REINFORCEMENT IN CRASH WALL OMITTED FOR CLARITY. SEE SECTION B–B, SHEET 21.

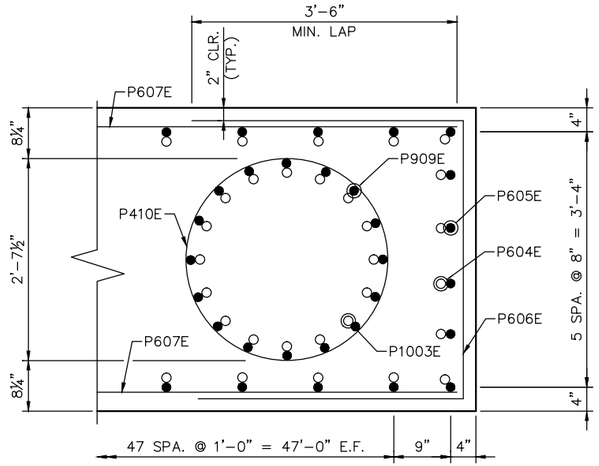

SECTION D–D

TOP & BOT. LONGITUDINAL REINFORCEMENT IN CRASH WALL OMITTED FOR CLARITY. SEE SECTION B–B, SHEET 21.

NO.	DATE	BY	CHECK	DESIGN	REVISION / SUBMITTAL

DESIGNED BY: RHK | CHECKED BY: JBW
DRAWN BY: RHK | CHECKED BY: JBW

AECOM Kimley»Horn

90% SUBMISSION - 01/22/16

METROPOLITAN COUNCIL

SOUTHWEST Green Line LRT Extension

CIVIL - VOLUME 4G
CSAH 40 (GLENWOOD AVENUE) - WEST
BRIDGE 27C16
WEST PIER REINFORCEMENT 1

DISCIPLINE: STRUCTURES
SHEET NAME: CBR27C16-BRG-PIR-001-4

SHEET 19 OF 68

Jan, 14 2016 11:08 am V:\3400_ADC\CAD\SEGMENT E4\PLAN SHEETS\STRUCTURES\27C16\CBR27C16-BRG-PIR-001.dwg By: phil.horton

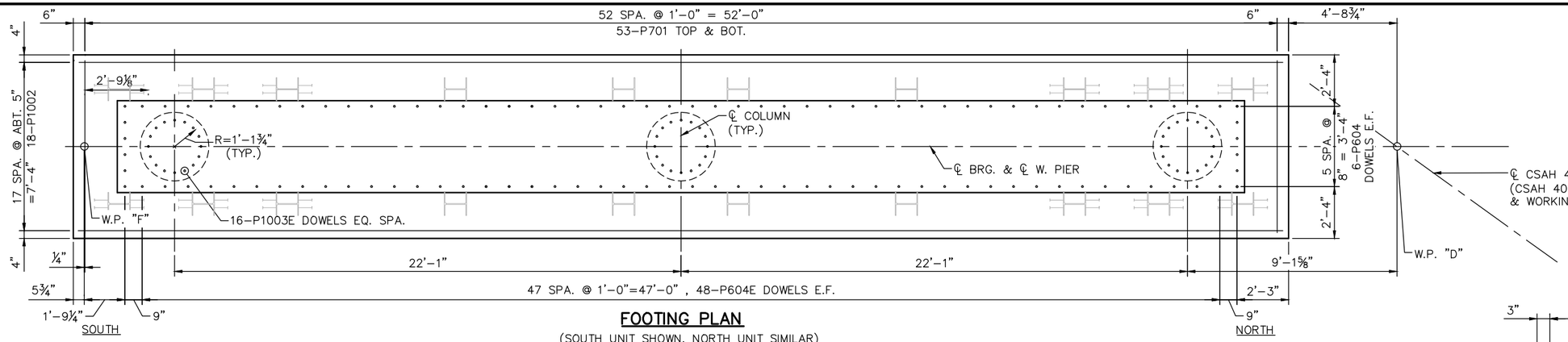

FOOTING PLAN

(SOUTH UNIT SHOWN, NORTH UNIT SIMILAR)

NOTES:

SEE SHEET 19 FOR LOCATION OF SECTION C-C, DETAIL A AND DETAIL B.

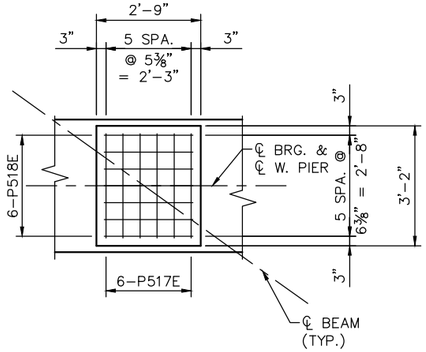

DETAIL A

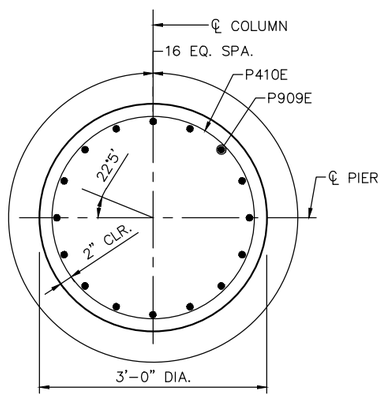

SECTION C-C

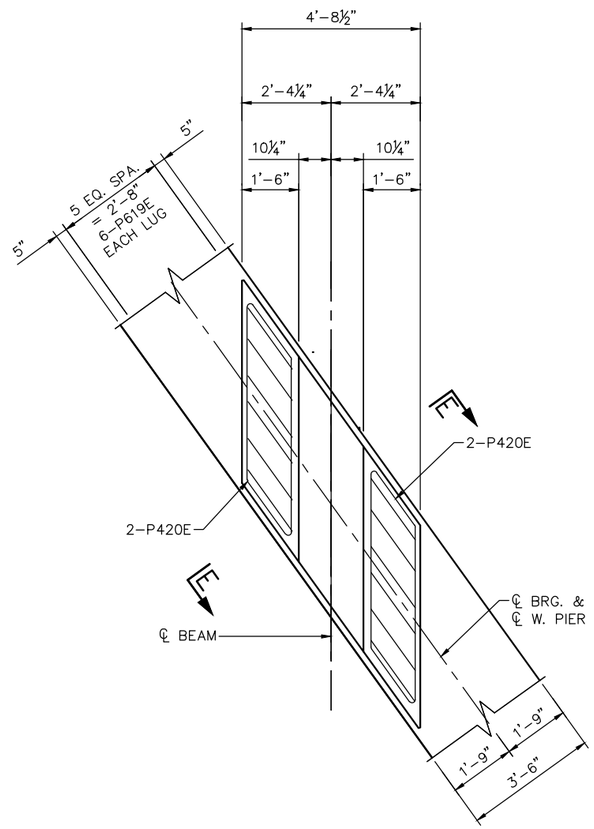

LUG REINFORCEMENT

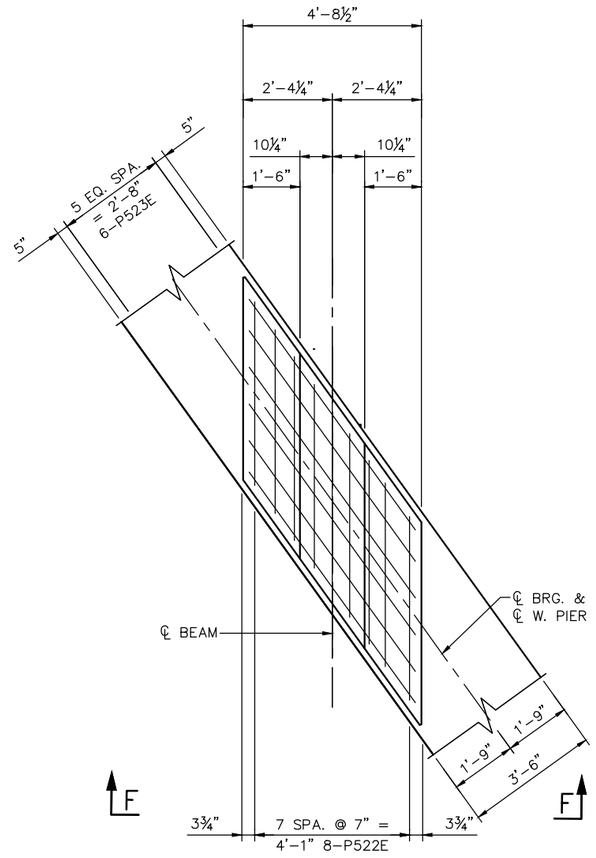

SEAT REINFORCEMENT

DETAIL B

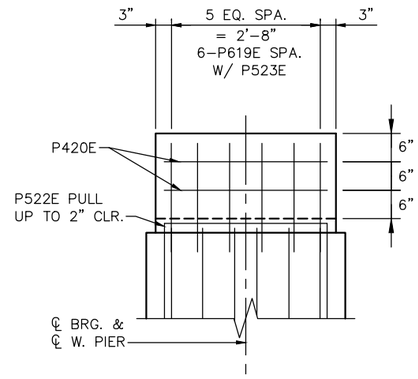

SECTION E-E

(PIER CAP REINFORCEMENT OMITTED FOR CLARITY)

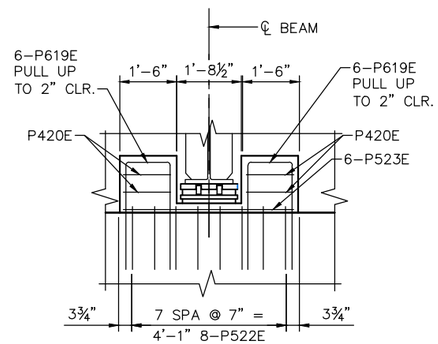

SECTION F-F

(PIER CAP REINFORCEMENT OMITTED FOR CLARITY)

NO.	DATE	BY	CHECK	DESIGN	REVISION / SUBMITTAL

DESIGNED BY: RHK CHECKED BY: JBW
DRAWN BY: RHK CHECKED BY: JBW

AECOM Kimley»Horn

90% SUBMISSION - 01/22/16

METROPOLITAN COUNCIL

SOUTHWEST Green Line LRT Extension

CIVIL - VOLUME 4G
CSAH 40 (GLENWOOD AVENUE) - WEST
BRIDGE 27C16
WEST PIER REINFORCEMENT 2

DISCIPLINE: STRUCTURES

SHEET NAME: CBR27C16-BRG-PIR-001-4

SHEET 20 OF 68

Jan, 14 2016 11:08 am V:\3400_ADC\CAD\SEGMENT E4\PLAN SHEETS\STRUCTURES\27C16\CBR27C16-BRG-PIR-001.dwg By: phil.horton

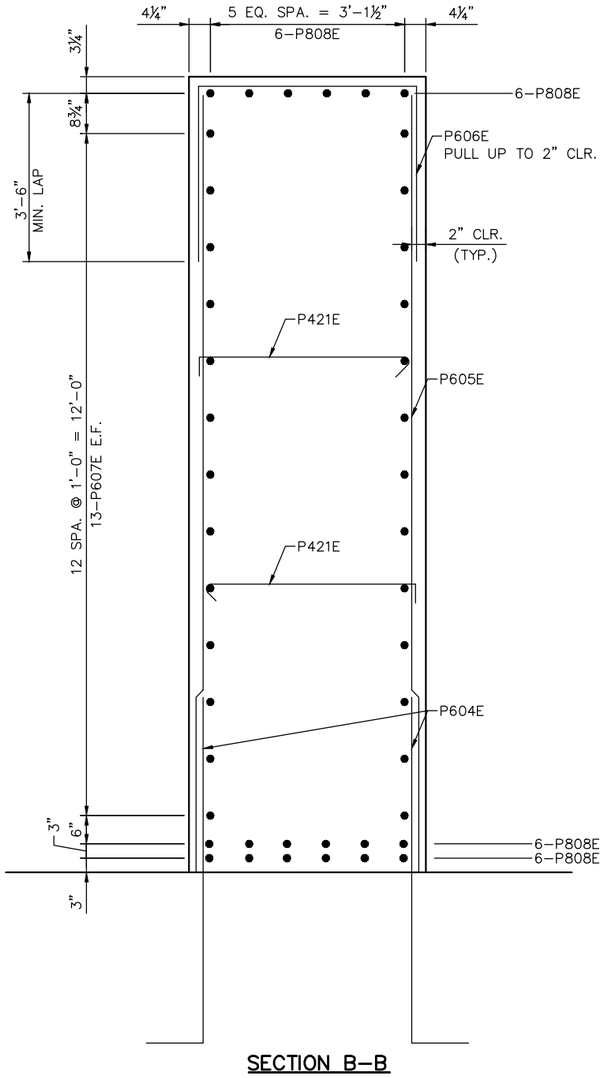

SECTION B-B

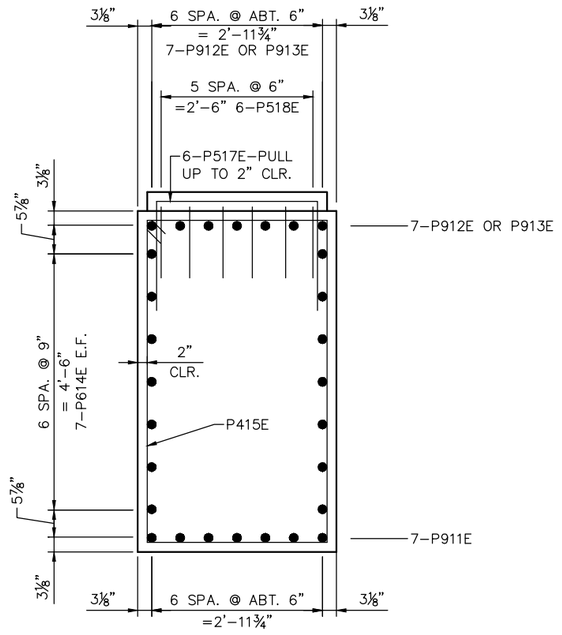

SECTION A-A

BILL OF REINFORCEMENT FOR WEST PIER				
BAR	NO.	LENGTH	SHAPE	LOCATION
P701	212	9'-2"	BENT	FOOTING, TRANS.
P1002	72	55'-4"	BENT	FOOTING, LONG.
P1003	96	13'-2"	BENT	COLUMN DOWELS
P604E	216	7'-3"	BENT	CRASH WALL DOWELS
P605E	216	13'-10"	STR.	CRASH WALL VERTS
P606E	252	10'-6"	BENT	CRASH WALL TIES
P607E	52	48'-8"	STR.	CRASH WALL SKIN
P808E	36	48'-8"	STR.	CRASH WALL LONG.
P909E	96	31'-8"	STR.	COLUMN VERTS
① P410E	6	-	BENT	COLUMN SPIRAL
P911E	14	54'-10"	STR.	CAP LONG. BOT.
P912E	14	20'-7"	BENT	CAP LONG. TOP (SHORT)
P913E	14	42'-9"	BENT	CAP LONG. TOP (LONG)
P614E	28	54'-10"	STR.	CAP SKIN
P415E	116	18'-5"	BENT	CAP STIRRUPS
P616E	28	5'-1"	BENT	CAP END TIES
P517E	72	6'-6"	BENT	PEDESTAL TIES
P518E	72	6'-1"	BENT	PEDESTAL TIES
P619E	48	7'-8"	BENT	SHEAR LUG TIES
P420E	8	14'-8"	BENT	SHEAR LUG HORIZ. TIES
P421E	200	4'-5"	BENT	CRASH WALL CENTER TIES
P522E	16	8'-4"	BENT	PEDESTAL TIES (SHEAR LUG)
P523E	12	10'-9"	BENT	PEDESTAL TIES (SHEAR LUG)

NOTES:

SEE SHEET 19 FOR LOCATION OF SECTIONS A-A & B-B.

① SPIRAL DATA:
OUTSIDE DIAMETER: 2'-8"
HEIGHT: 28'-6"
PITCH: 3"
SPIRAL ROD SIZE: ½" PLAIN ROUND
WEIGHT 655 LBS EACH
OUTSIDE DIAMETER OF DOWEL CIRCLE TO BE 2¼" LESS THAN INSIDE DIAMETER SPIRAL.
ADD 1½ COMPLETE TURNS AT EACH END.

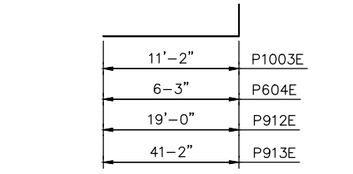

P1003E, P604E, P912E, P913E

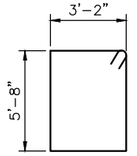

P415E

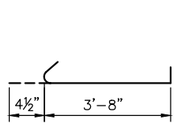

P421E

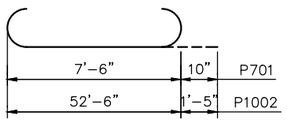

P701, P1002

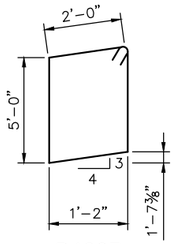

P420E

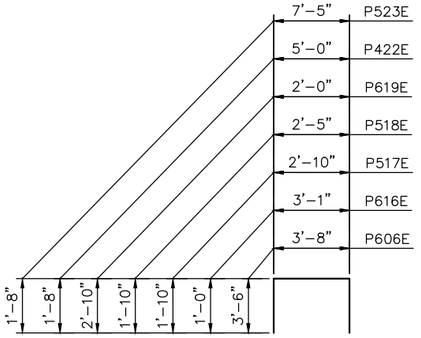

P606E, P616E, P517E, P518E, P619E, P522E, P523E

NO.	DATE	BY	CHECK	DESIGN	REVISION / SUBMITTAL

DESIGNED BY: RHK CHECKED BY: JBW
DRAWN BY: RHK CHECKED BY: JBW

AECOM Kimley»Horn

90% SUBMISSION - 01/22/16

METROPOLITAN COUNCIL

SOUTHWEST Green Line LRT Extension

CIVIL - VOLUME 4G
CSAH 40 (GLENWOOD AVENUE) - WEST
BRIDGE 27C16
WEST PEIR REINFORCEMENT 3

DISCIPLINE: STRUCTURES
SHEET NAME: CBR27C16-BRG-PIR-001-6

SHEET 21 OF 68

Jan, 14 2016 11:08 am V:\3400_ADC\CAD\SEGMENT E4\PLAN SHEETS\STRUCTURES\27C16\CBR27C16-BRG-PIR-001.dwg By: phil.horton

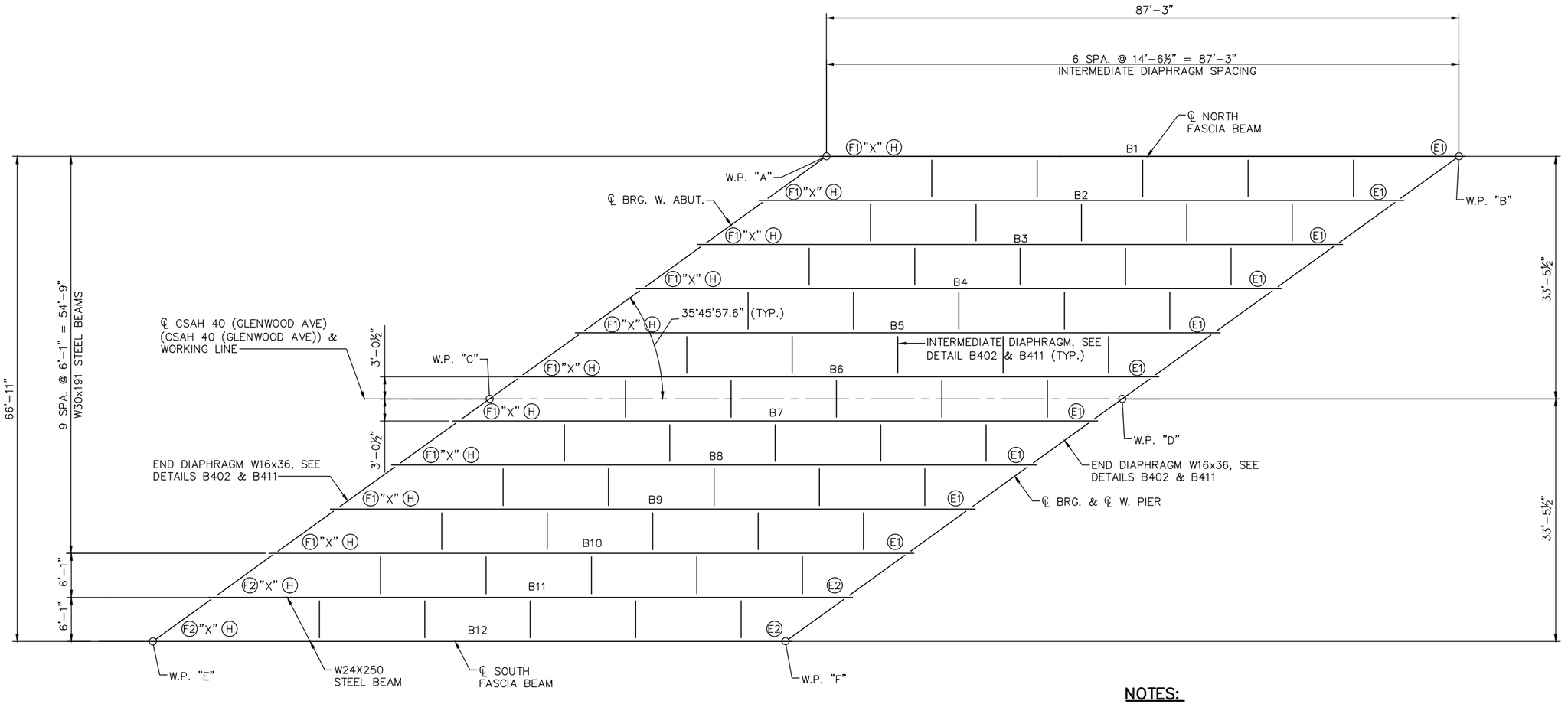

FRAMING PLAN

NOTES:

"X" INDICATES END OF BEAM.

(H) DENOTES TAPERED SOLE PLATE. INSTALL THICKER SIDE OF SOLE PLATE ON UPHILL SIDE OF CENTERLINE BEARING. SEE DETAIL B354.

(E1) DENOTES EXPANSION CURVED PLATE BEARING ASSEMBLY TYPE E1. SEE DETAIL B355.

(E2) DENOTES EXPANSION CURVED PLATE BEARING ASSEMBLY TYPE E2. SEE DETAIL B355.

(F1) DENOTES FIXED CURVED PLATE BEARING ASSEMBLY, TYPE F1. SEE DETAIL B354.

(F2) DENOTES FIXED CURVED PLATE BEARING ASSEMBLY, TYPE F2. SEE DETAIL B354.

ALL BEAMS SET PARALLEL TO WORKING LINE, ALL INTERMEDIATE DIAPHRAGMS SET PERPENDICULAR TO CENTERLINE OF BEAMS.

1. ALL BEAMS SET PARALLEL TO WORKING LINE, ALL INTERMEDIATE DIAPHRAGMS SET PERPENDICULAR TO CENTERLINE OF BEAMS.
2. DIMENSIONS SHOWN ARE BASED ON AN AMBIENT TEMPERATURE OF 45° F. FABRICATOR TO ADJUST FOR TEMPERATURE AT FABRICATION.
3. PRIOR TO POURING DECK, SNUG TIGHTEN ONLY BOLTS IN END DIAPHRAGMS. AFTER POURING ALL DECK CONCRETE, FULLY TIGHTEN END DIAPHRAGM BOLTS.
4. PROVIDE OVERSIZE HOLES IN END DIAPHRAGM CONNECTIONS.
5. DETAIL AND FABRICATE STEEL MEMBERS FOR A NO-LOAD FIT.

NO.	DATE	BY	CHECK	DESIGN	REVISION / SUBMITTAL

DESIGNED BY: HLR | CHECKED BY: JSM
DRAWN BY: NAO | CHECKED BY: JBW

AECOM Kimley»Horn

90% SUBMISSION - 01/22/16

METROPOLITAN COUNCIL

SOUTHWEST Green Line LRT Extension

CIVIL - VOLUME 4G
CSAH 40 (GLENWOOD AVENUE) - WEST
BRIDGE 27C16
FRAMING PLAN

DISCIPLINE: STRUCTURES
SHEET NAME: CBR27C16-BRG-SUP-002

SHEET 22 OF 68

Jan, 14 2016 11:09 am V:\3400_ADC\CAD\SEGMENT E4\PLAN SHEETS\STRUCTURES\27C16\CBR27C16-BRG-SUP-002.dwg By: phil.horton

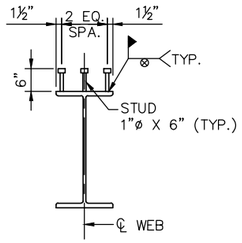

SHEAR CONNECTOR DETAIL

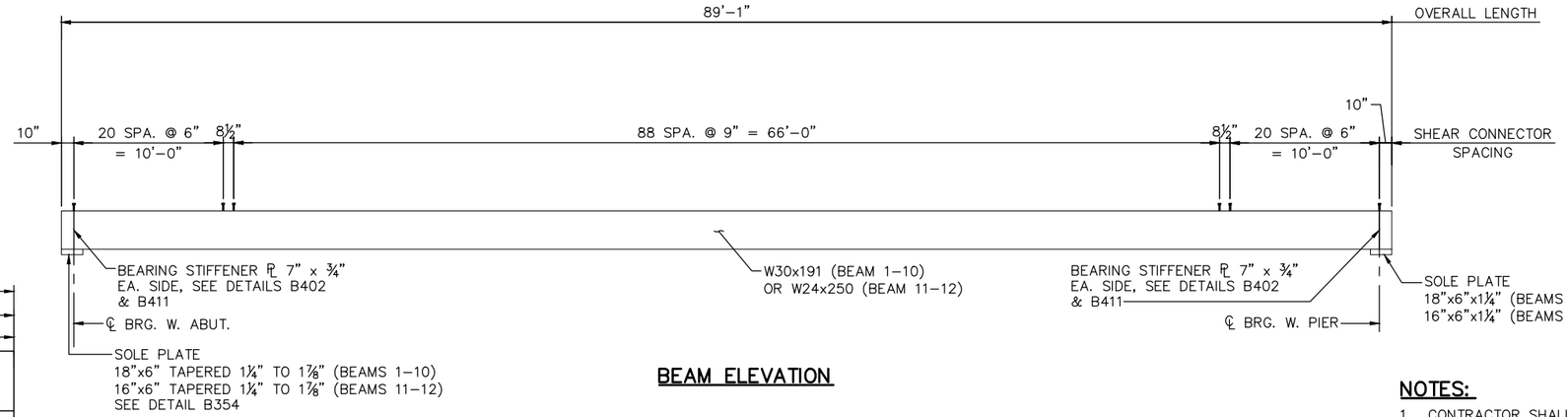

BEAM ELEVATION

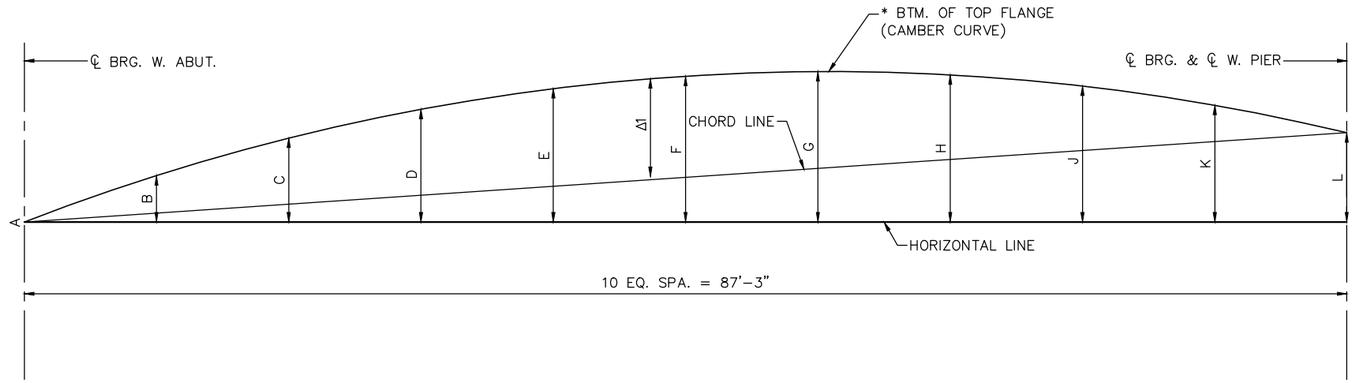

CAMBER DIAGRAM

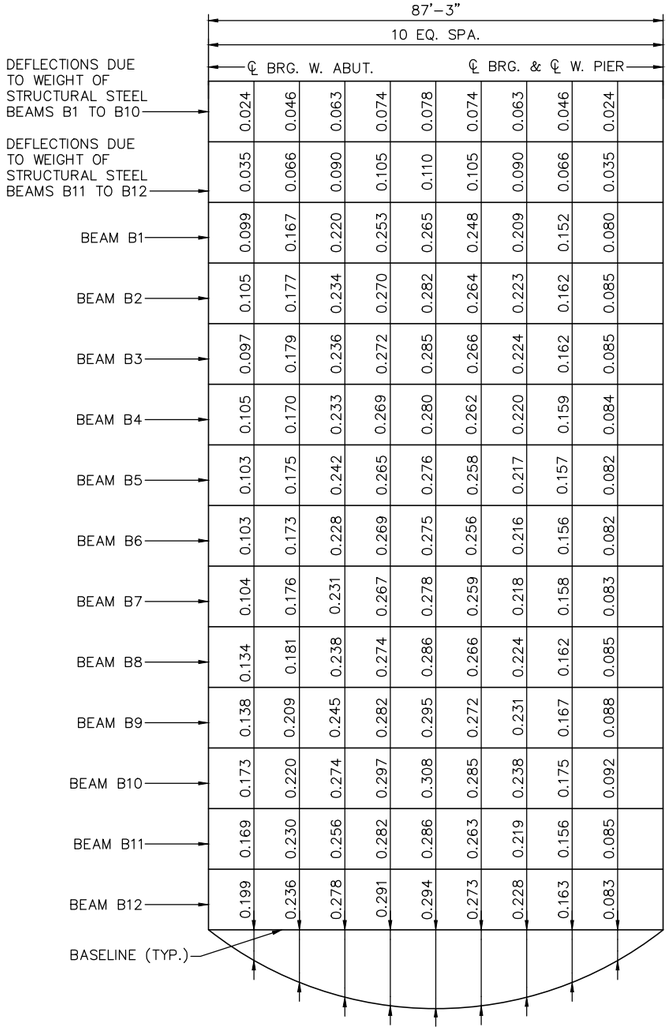

DEFLECTION DIAGRAM

* DEFECTION DUE TO SLAB, WEARING COURSE, AND RAILINGS. DOES NOT INCLUDE FUTURE WEARING COURSE.

DIMENSIONS (SHOWN IN INCHES)											
BEAM	A	B	C	D	E	F	G	H	J	K	L
B1	0	4 3/8	8 3/8	11 1/4	13 1/8	14	13 7/8	13 1/4	12 1/2	11 1/2	10 1/2
B2	0	4 3/4	9 3/8	13	15 5/8	17 1/4	17 7/8	17 3/8	16 7/8	15 3/4	14 5/8
B3	0	4 5/8	9	13 1/4	16 5/8	19	20 1/4	20 1/2	20	19	18
B4	0	5 1/8	10	14 1/8	17 5/8	20 1/4	22	23	23 1/4	22 3/4	21 3/4
B5	0	5 1/8	10 1/4	15	18 7/8	22	24 1/4	25 7/8	26 5/8	26 5/8	26
B6	0	4 7/8	9 3/4	14 3/8	18 1/2	22	25 3/8	27 3/8	28 7/8	29 3/4	30 1/8
B7	0	5 1/4	10 5/8	15 3/4	20 1/2	23 7/8	25 3/4	27	28 1/8	28 3/4	29 1/2
B8	0	7 1/2	14 1/8	19 5/8	24 1/4	27 3/4	30 1/8	31 1/2	32 5/8	33 3/8	34 1/4
B9	0	6 3/4	13 1/4	18 7/8	23 7/8	28	31 1/4	33 5/8	35 1/2	36 3/8	37
B10	0	6 1/4	12 1/2	18 1/2	24	28 5/8	32 3/8	35 3/8	37 5/8	38 7/8	39 7/8
B11	0	7 3/4	14 7/8	21 3/8	27	31 7/8	36	39 3/8	42	43 7/8	45 3/8
B12	0	7 7/8	13	19 1/4	25 1/8	30 3/4	35 5/8	39 7/8	43 3/8	46 1/4	48 1/2

MAXIMUM CAMBER IN SEGMENT	
BEAM	Δ 1
B1	9
B2	10
B3	10
B4	9 1/4
B5	9
B6	7 1/4
B7	9 1/8
B8	10 5/8
B9	9 3/8
B10	8 5/8
B11	9 1/4
B12	6 1/2

NOTES:

1. CONTRACTOR SHALL BE ALLOWED TO SUBSTITUTE A BUILT-UP PLATE GIRDER WITH SIMILAR PROPERTIES AS THE ROLLED SECTION, SUBJECT TO APPROVAL OF THE ENGINEER.
2. ALL STRUCTURAL STEEL SHALL CONFORM TO 3309 UNLESS OTHERWISE NOTED.
3. BEARING STIFFENERS SHALL BE VERTICAL.
4. END OF BEAMS SHALL BE VERTICAL.
5. ROWS OF SHEAR CONNECTORS SHALL BE ALIGNED PARALLEL TO THE TRANSVERSE SLAB REINFORCEMENT BARS.
6. SHEAR CONNECTORS SHALL CONFORM TO SPEC. 3391.
7. SHEAR STUDS ON THE TOP FLANGE OF THE GIRDER SHALL BE INSTALLED IN THE FIELD.
8. SHEAR CONNECTORS TO PROJECT A MINIMUM OF 2" INTO DECK STRUCTURAL SLAB. IN NO CASE SHALL SHEAR CONNECTORS PROJECT CLOSER THAN 1" TO TOP OF DECK STRUCTURAL SLAB. ENGINEER TO FIELD VERIFY BEAM ELEVATION AND AUTHORIZE STUD LENGTH.
9. CAMBER DIAGRAM SHOWN IS FOR BEAMS IN UNLOADED POSITION AND PROVIDES FOR ALL DEAD LOAD DEFLECTIONS AND GEOMETRIC CAMBER.
10. CAMBER DIAGRAM CHORD LINES ARE STRAIGHT LINES FROM END TO END OF BEAM SEGMENTS AT BOTTOM OF TOP FLANGE. *
11. CAMBER DIAGRAM HORIZONTAL DIMENSIONS ARE SHOWN IN FEET. VERTICAL DIMENSIONS ARE SHOWN IN INCHES AND FRACTION OF INCHES.
12. DEFLECTION DIAGRAM VALUES GIVEN ARE IN DECIMAL FEET.
13. INTERMEDIATE DIAPHRAGMS SHALL BE FABRICATED AS PRIMARY STRUCTURAL MEMBERS USING STANDARD SIZE HOLES.

NO.	DATE	BY	CHECK	DESIGN	REVISION / SUBMITTAL

DESIGNED BY: HLR CHECKED BY: JSM
DRAWN BY: HLR CHECKED BY: JBW

AECOM Kimley»Horn

90% SUBMISSION - 01/22/16

METROPOLITAN COUNCIL

SOUTHWEST Green Line LRT Extension

CIVIL - VOLUME 4G
CSAH 40 (GLENWOOD AVENUE) - WEST
BRIDGE 27C16
STRUCTURAL STEEL DETAILS

DISCIPLINE: STRUCTURES
SHEET NAME: CBR27C16-BRG-SUP-003

SHEET 23 OF 68

Jan. 14 2016 11:09 am V:\3400_ADC\CAD\SEGMENT E4\PLAN SHEETS\STRUCTURES\27C16\CBR27C16-BRG-SUP-003.dwg By: phil.horton

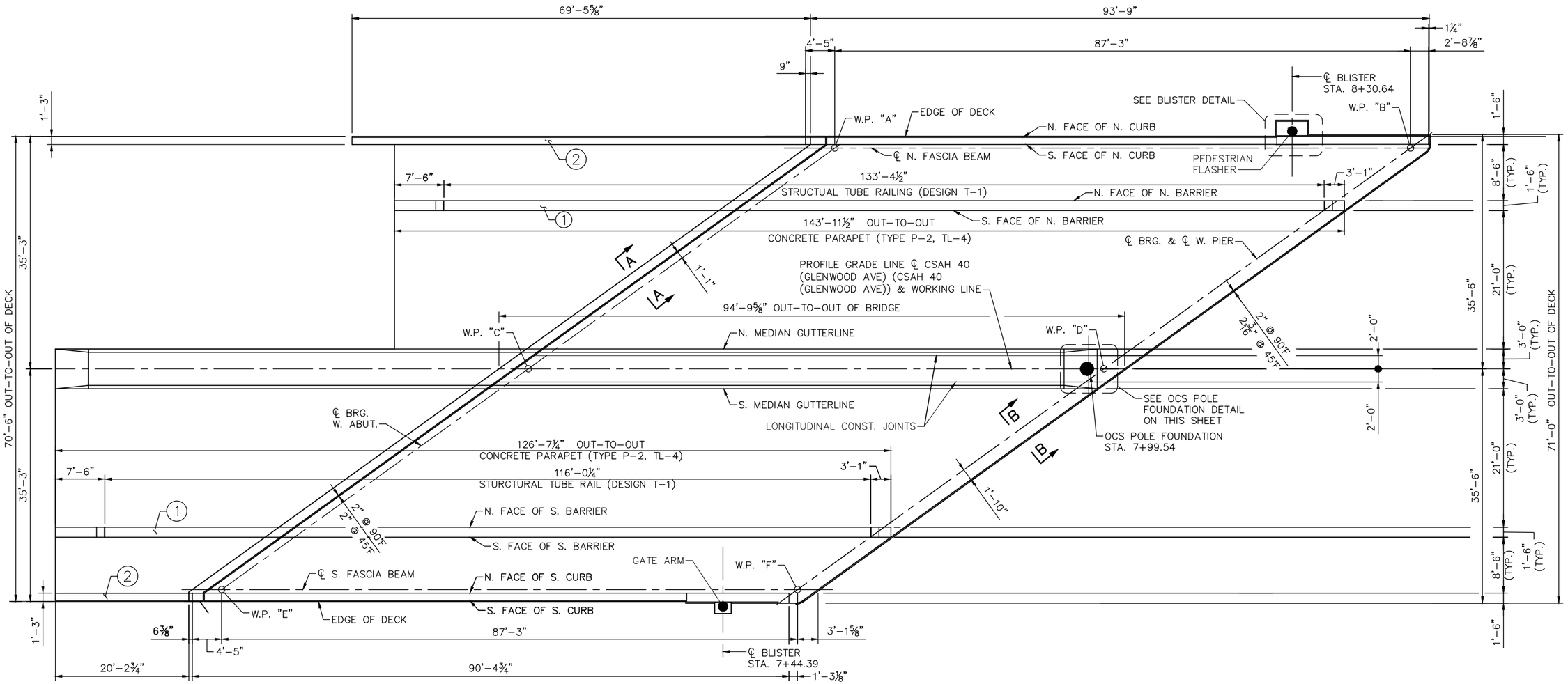

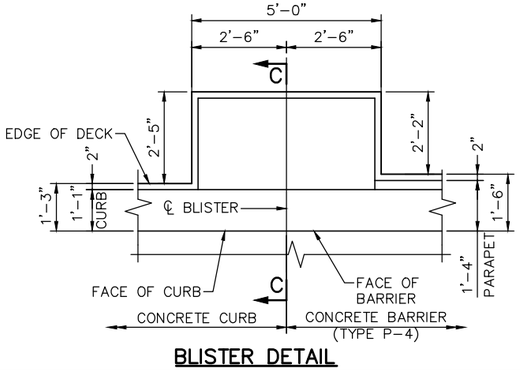

BLISTER DETAIL

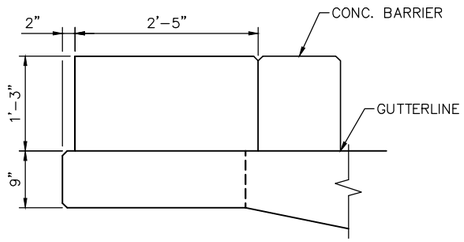

SECTION C–C

DECK PLAN

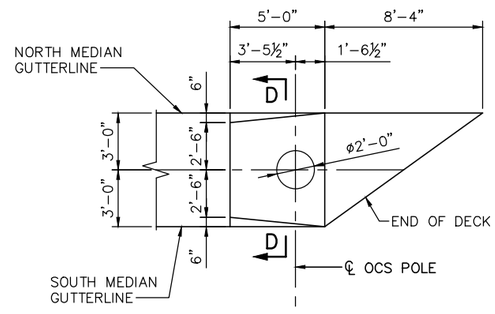

OCS POLE FOUNDATION

NOTES:

SEE SHEET 30 FOR SECTION D–D.

SEE SHEET 28 FOR SECTIONS A–A, B–B.

SEE SHEET 32 & 33 FOR CONCRETE BARRIER AND CONCRETE CURB ELEVATIONS.

① CONCRETE PARAPET MOD. P-2 (TL-4) ON APPROACH PANEL. SEE SHEET 38.

② CONCRETE CURB ON APPROACH PANEL. SEE SHEET 39.

NO.	DATE	BY	CHECK	DESIGN	REVISION / SUBMITTAL

DESIGNED BY: BAW | CHECKED BY: JBW
DRAWN BY: MD | CHECKED BY: AMB

AECOM Kimley»Horn

90% SUBMISSION - 01/22/16

METROPOLITAN COUNCIL

SOUTHWEST Green Line LRT Extension

CIVIL - VOLUME 4G
CSAH 40 (GLENWOOD AVENUE) - WEST
BRIDGE 27C16
SUPERSTRUCTURE DETAILS 1

DISCIPLINE: STRUCTURES

SHEET NAME: CBR27C16-BRG-SUP-004

SHEET 24 OF 68

Jan, 14 2016 11:10 am V:\3400_ADC\CAD\SEGMENT E4\PLAN SHEETS\STRUCTURES\27C16\CBR27C16-BRG-SUP-004.dwg By: phil.horton

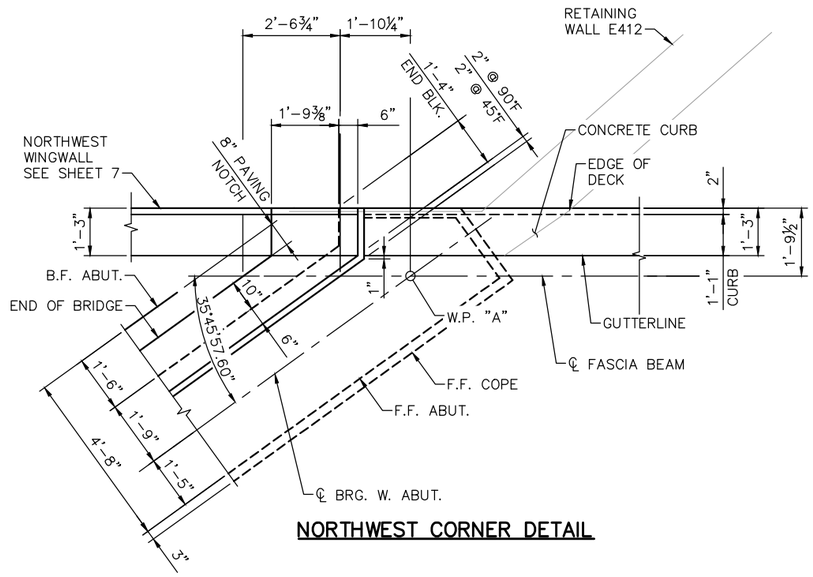

NORTHWEST CORNER DETAIL

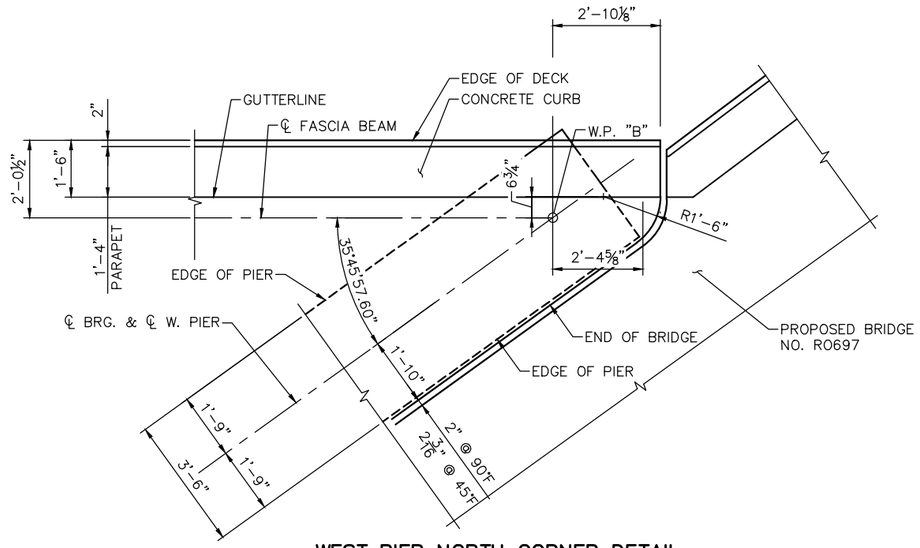

WEST PIER NORTH CORNER DETAIL

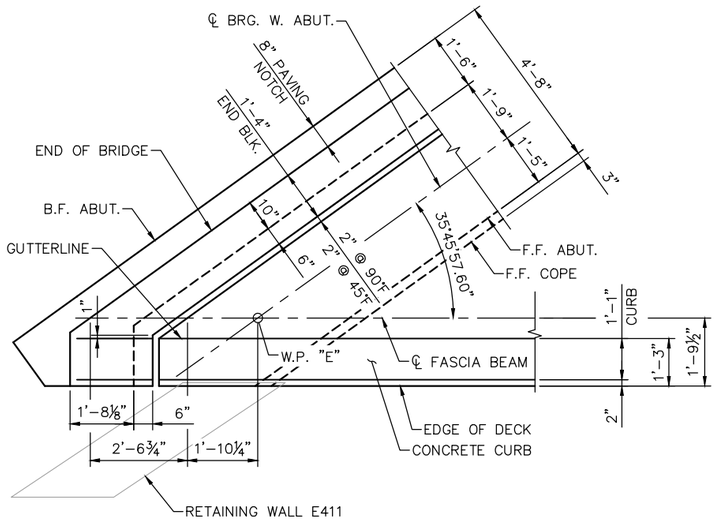

SOUTHWEST CORNER DETAIL

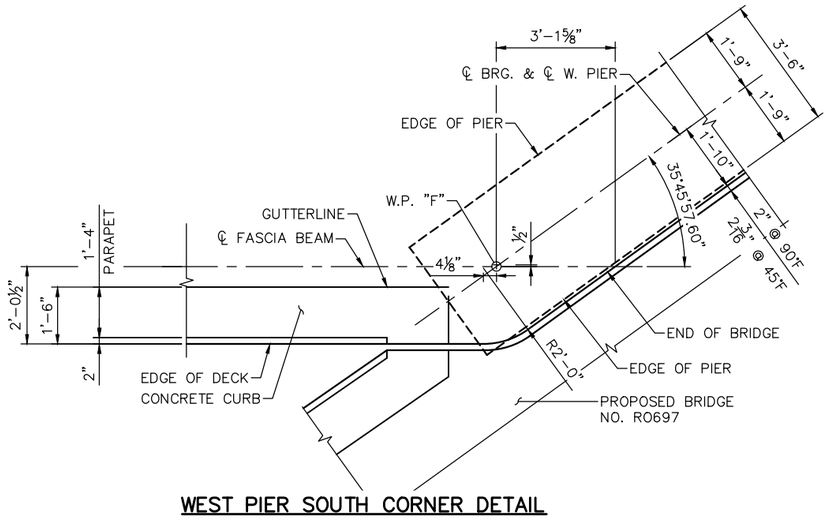

WEST PIER SOUTH CORNER DETAIL

NO.	DATE	BY	CHECK	DESIGN	REVISION / SUBMITTAL

DESIGNED BY: BAW | CHECKED BY: JBW
DRAWN BY: MD | CHECKED BY: AMB

AECOM Kimley»Horn

90% SUBMISSION - 01/22/16

METROPOLITAN COUNCIL

SOUTHWEST Green Line LRT Extension

CIVIL - VOLUME 4G
CSAH 40 (GLENWOOD AVENUE) - WEST
BRIDGE 27C16
SUPERSTRUCTURE DETAILS 2

DISCIPLINE: STRUCTURES

SHEET NAME: CBR27C16-BRG-SUP-005

SHEET 25 OF 68

Jan. 14 2016 11:10 am V:\3400_ADC\CAD\SEGMENT E4\PLAN SHEETS\STRUCTURES\27C16\CBR27C16-BRG-SUP-005.dwg By: phil.horton

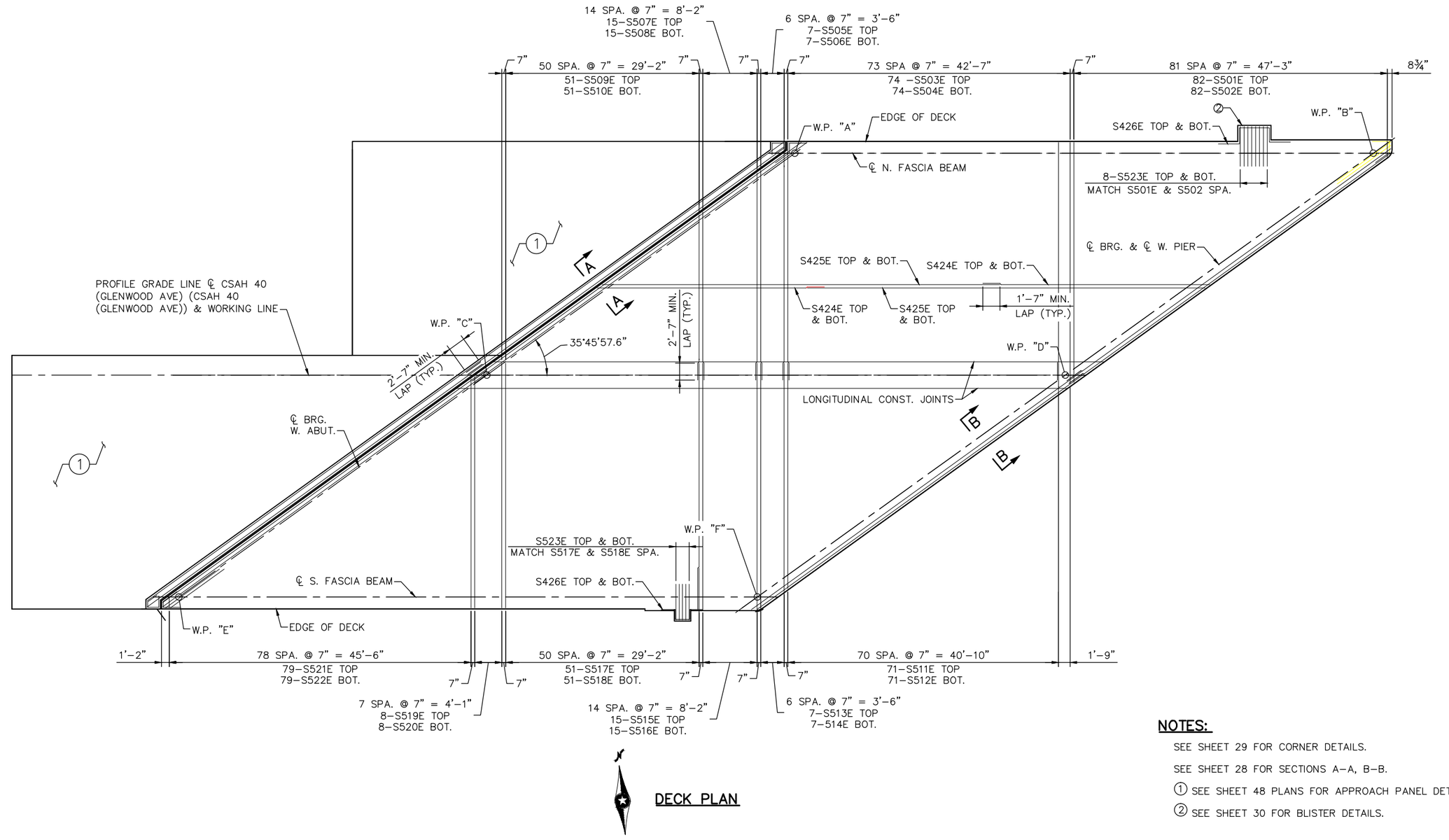

DECK PLAN

NOTES:

SEE SHEET 29 FOR CORNER DETAILS.

SEE SHEET 28 FOR SECTIONS A–A, B–B.

① SEE SHEET 48 PLANS FOR APPROACH PANEL DETAILS.

② SEE SHEET 30 FOR BLISTER DETAILS.

NO.	DATE	BY	CHECK	DESIGN	REVISION / SUBMITTAL

DESIGNED BY: BAW CHECKED BY: JBW
DRAWN BY: MD CHECKED BY: AMB

AECOM Kimley»Horn

90% SUBMISSION - 01/22/16

METROPOLITAN COUNCIL

SOUTHWEST Green Line LRT Extension

CIVIL - VOLUME 4G
CSAH (GLENWOOD AVENUE) - WEST
BRIDGE 27C16
SUPERSTRUCTURE DETAILS 3

DISCIPLINE: STRUCTURES

SHEET NAME: CBR27C16-BRG-SUP-006

SHEET 26 OF 68

Jan. 14 2016 11:11 am V:\3400_ADC\CAD\SEGMENT E4\PLAN SHEETS\STRUCTURES\27C16\CBR27C16-BRG-SUP-006.dwg By: phil.horton

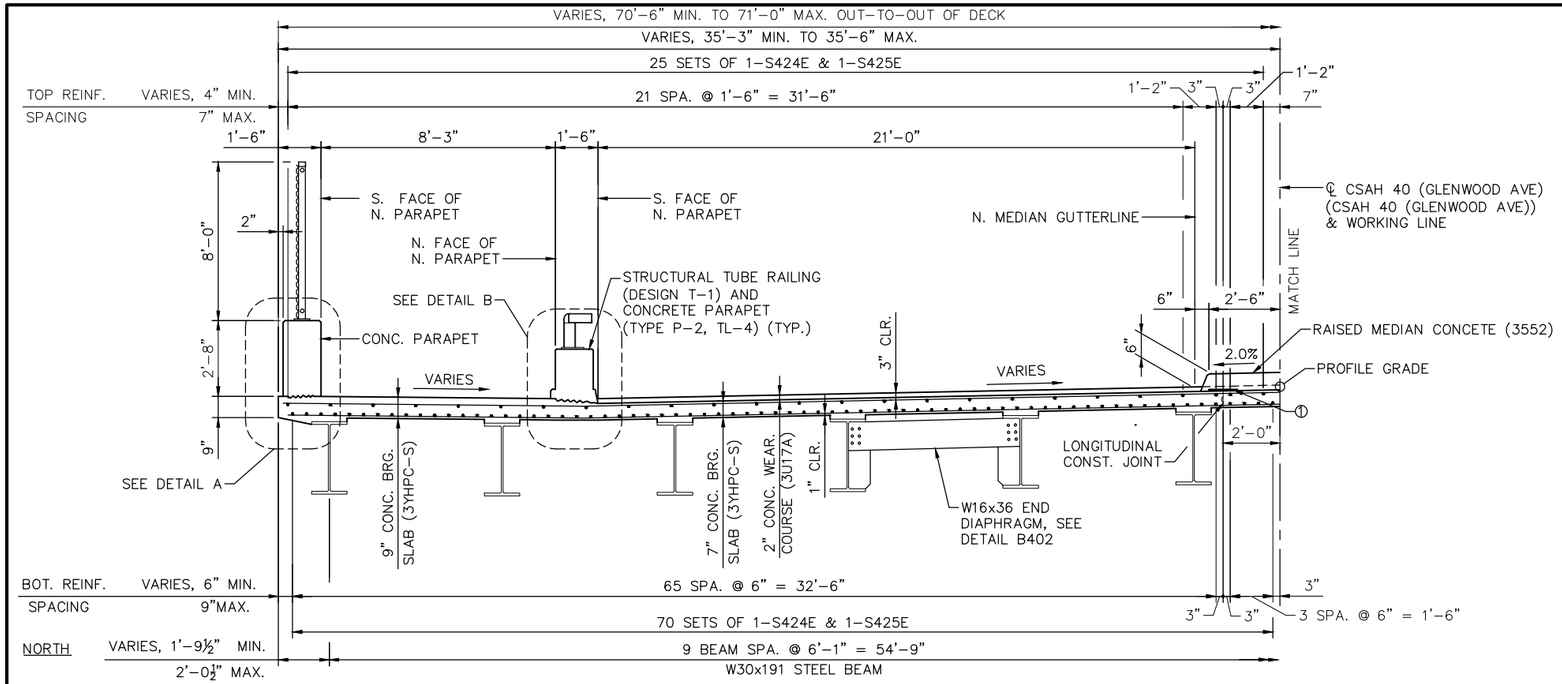

TRANSVERSE SECTION THRU DECK

NOTES:

SEE SHEET 32 & 33 FOR TOP OF DECK ELEVATIONS ALONG GUTTERLINES.

(1) MEMBRANE WATERPROOFING SYSTEMS PER MnDOT 2481.3.B.

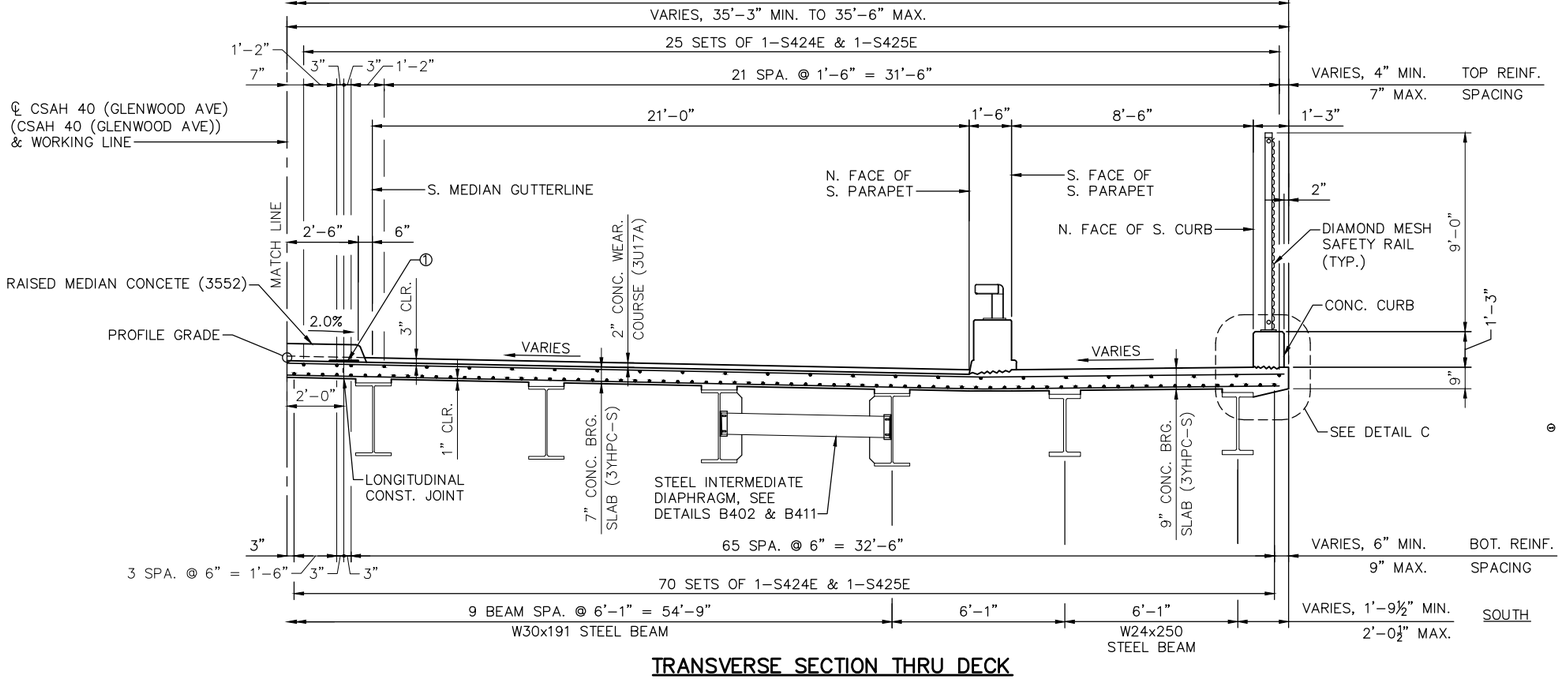

TRANSVERSE SECTION THRU DECK

NO.	DATE	BY	CHECK	DESIGN	REVISION / SUBMITTAL

DESIGNED BY: BAW | CHECKED BY: JBW
DRAWN BY: MD | CHECKED BY: AMB

AECOM Kimley»Horn

90% SUBMISSION - 01/22/16

METROPOLITAN COUNCIL

SOUTHWEST Green Line LRT Extension

CIVIL - VOLUME 4G
CSAH 40 (GLENWOOD AVENUE) - WEST
BRIDGE 27C16
SUPERSTRUCTURE DETAILS 4

DISCIPLINE: STRUCTURES
SHEET NAME: CBR27C16-BRG-SUP-007-1

SHEET 27 OF 68

Jan. 14 2016 11:11 am V:\3400_ADC\CAD\SEGMENT E4\PLAN SHEETS\STRUCTURES\27C16\CBR27C16-BRG-SUP-007.dwg By: phil.horton

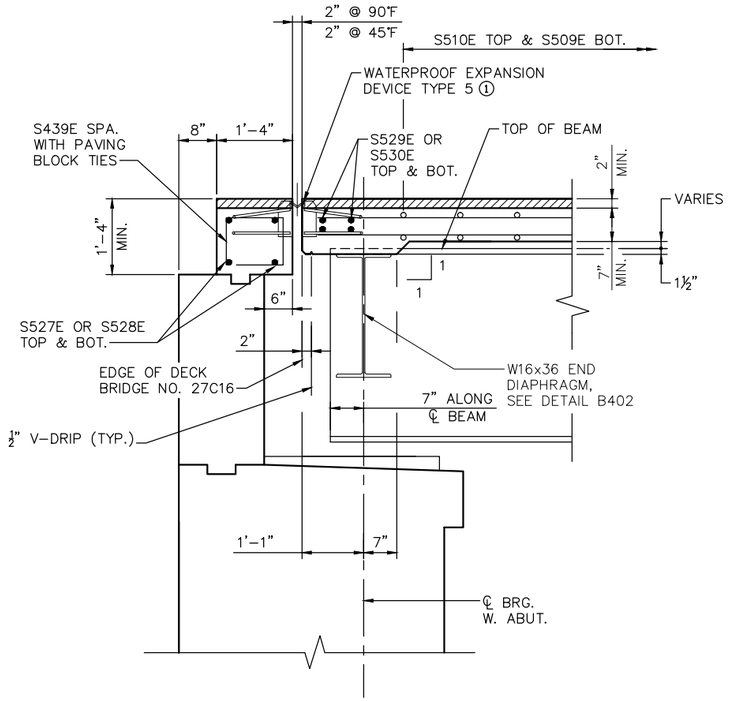

SECTION A–A

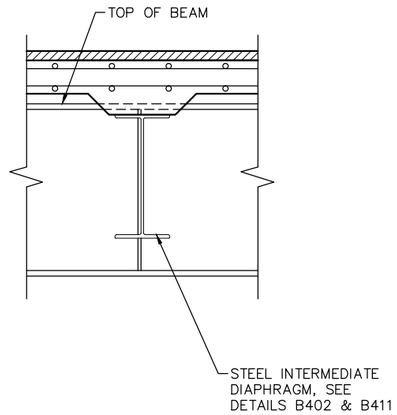

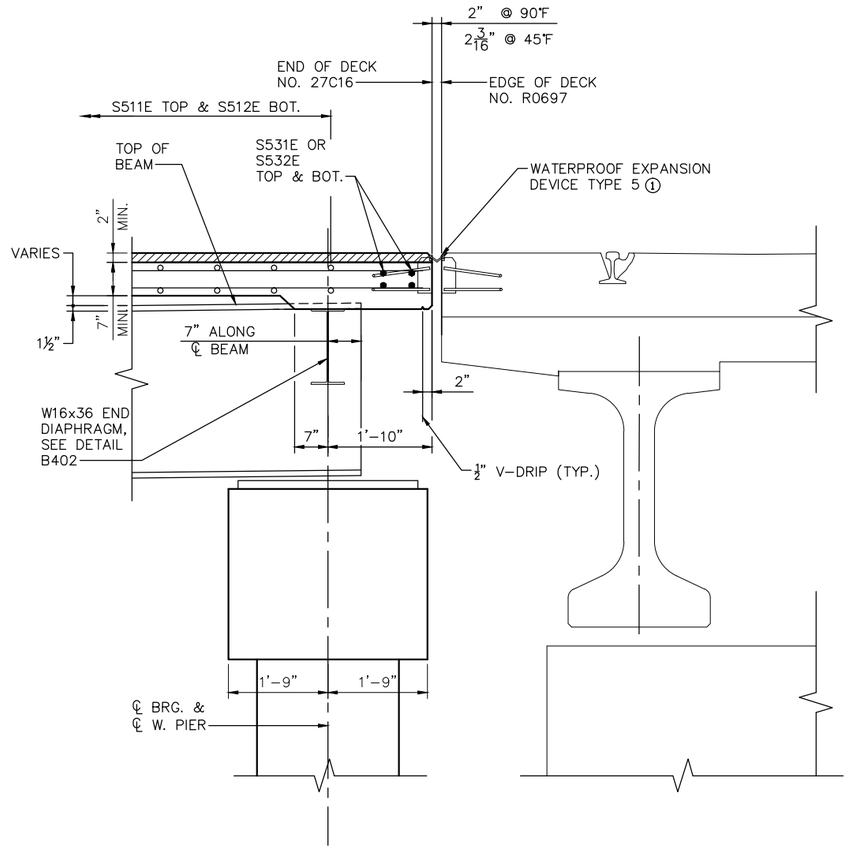

SECTION B–B

NOTES:

DIMENSIONS ARE PERPENDICULAR TO ℄ OF BEARING, UNLESS NOTED OTHERWISE.

① COVER PLATE LOCATED AT SIDEWALK OVER EXPANSION DEVICE, SEE SHEETS 34 & 35.

NO.	DATE	BY	CHECK	DESIGN	REVISION / SUBMITTAL

DESIGNED BY: BAW | CHECKED BY: JBW
DRAWN BY: MD | CHECKED BY: AMB

AECOM Kimley»Horn

90% SUBMISSION - 01/22/16

METROPOLITAN COUNCIL

SOUTHWEST Green Line LRT Extension

CIVIL - VOLUME 4G
CSAH 40 (GLENWOOD AVENUE) - WEST
BRIDGE 27C16
SUPERSTRUCTURE DETAILS 5

DISCIPLINE: STRUCTURES
SHEET NAME: CBR27C16-BRG-SUP-007-2

SHEET 28 OF 68

Jan. 14 2016 11:11 am V:\3400_ADC\CAD\SEGMENT E4\PLAN SHEETS\STRUCTURES\27C16\CBR27C16-BRG-SUP-007.dwg By: phil.horton

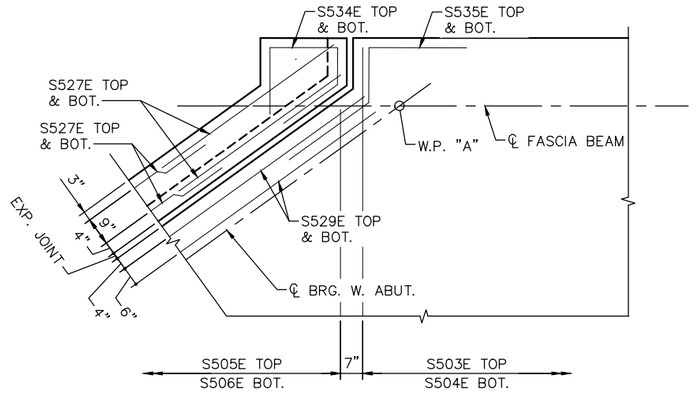

NORTHWEST CORNER DETAIL
(BOTTOM REINFORCEMENT SHOWN)

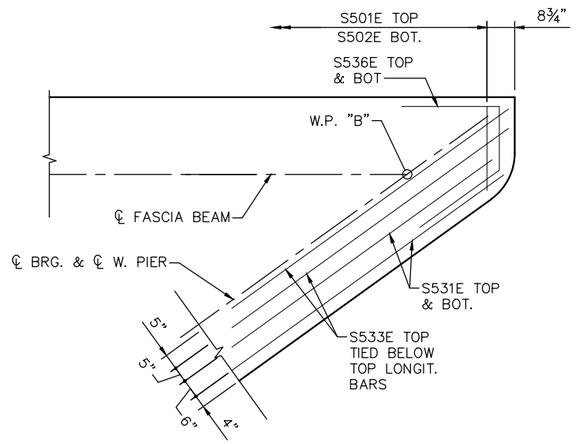

WEST PIER NORTH CORNER DETAIL
(BOTTOM REINFORCEMENT SHOWN)

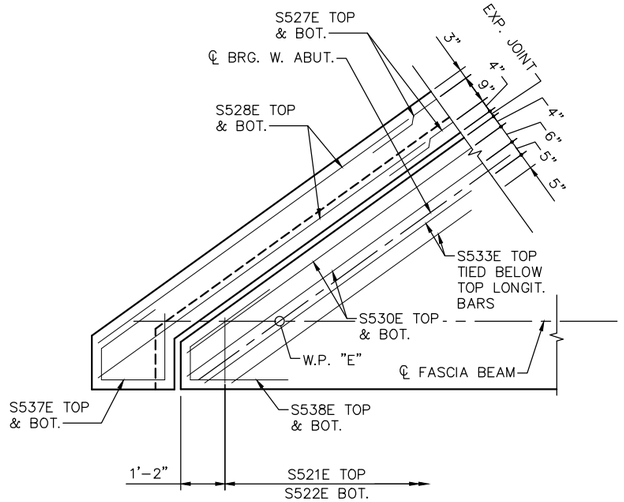

SOUTHWEST CORNER DETAIL
(BOTTOM REINFORCEMENT SHOWN)

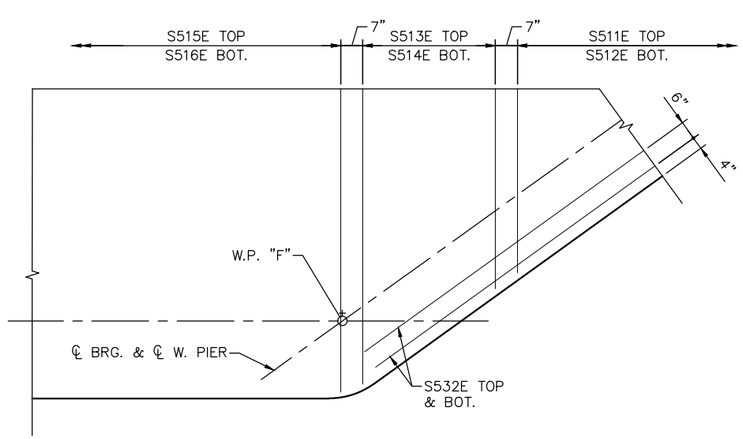

WEST PIER SOUTH CORNER DETAIL
(BOTTOM REINFORCEMENT SHOWN)

NO.	DATE	BY	CHECK	DESIGN	REVISION / SUBMITTAL

DESIGNED BY: BAW | CHECKED BY: JBW
DRAWN BY: MD | CHECKED BY: AMB

AECOM Kimley»Horn

90% SUBMISSION - 01/22/16

METROPOLITAN COUNCIL

SOUTHWEST Green Line LRT Extension

CIVIL - VOLUME 4G
CSAH 40 (GLENWOOD AVENUE) - WEST
BRIDGE 27C16
SUPERSTRUCTURE DETAILS 6

DISCIPLINE: STRUCTURES
SHEET NAME: CBR27C16-BRG-SUP-007-3

SHEET 29 OF 68

Jan, 14 2016 11:11 am V:\3400_ADC\CAD\SEGMENT E4\PLAN SHEETS\STRUCTURES\27C16\CBR27C16-BRG-SUP-007.dwg By: phil.horton

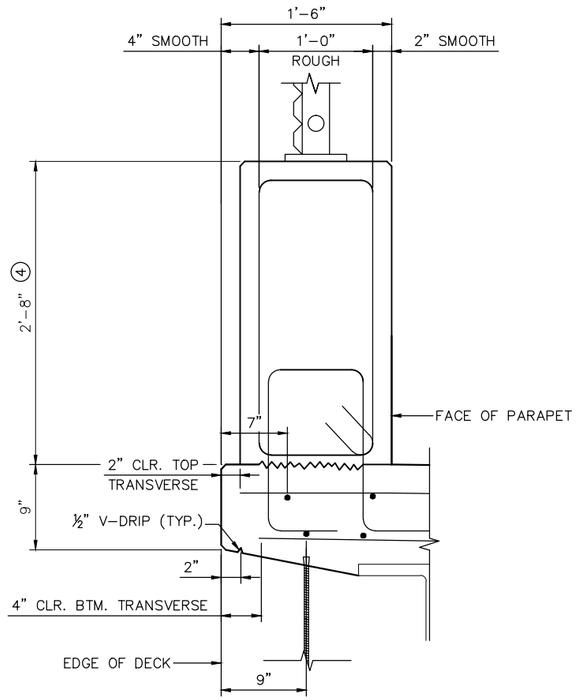

DETAIL A

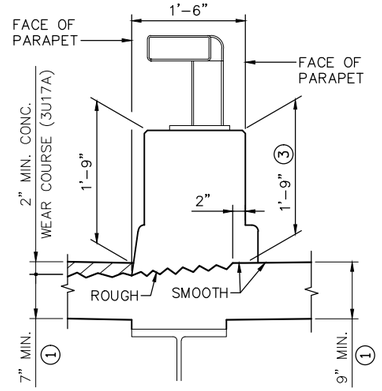

DETAIL B

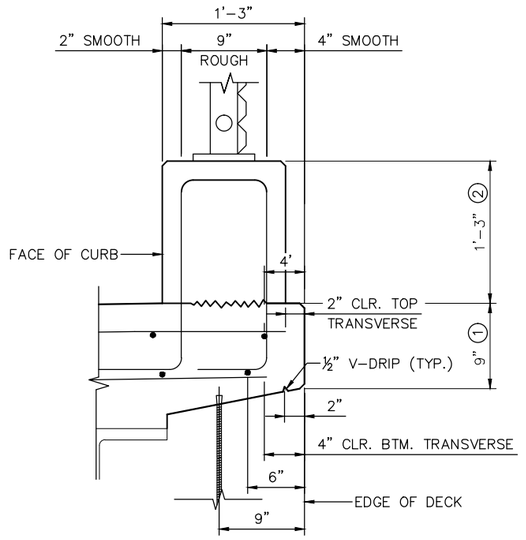

DETAIL C

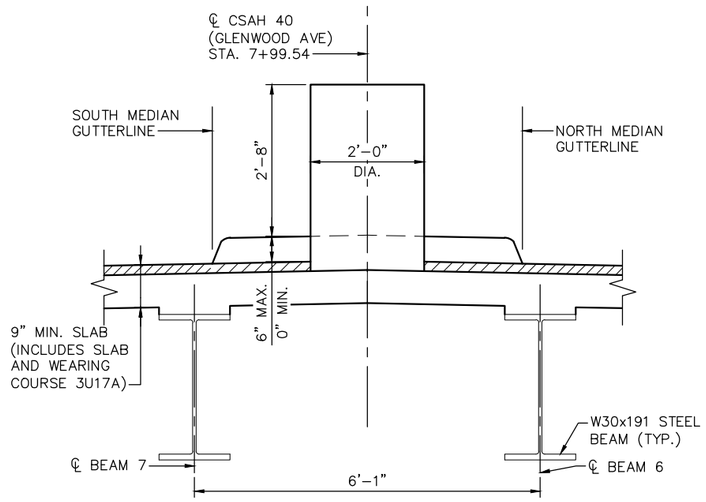

SECTION D-D

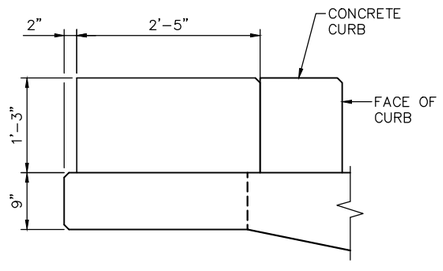

BLISTER SECTION

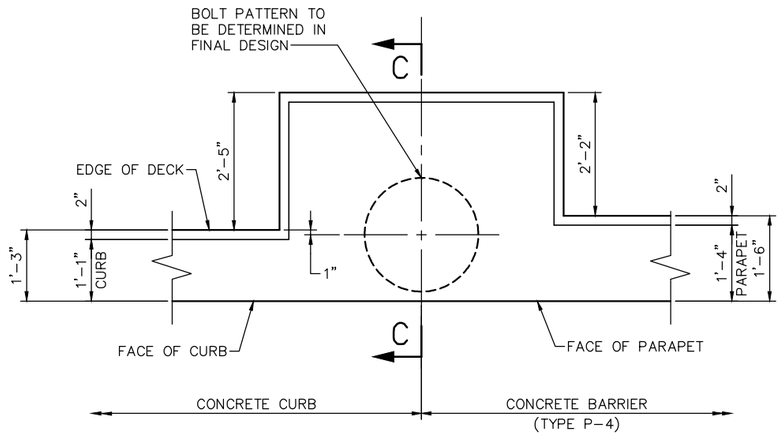

BLISTER DETAIL

NOTES:

SEE SHEET 32 & 33 FOR TOP OF DECK ELEVATIONS ALONG GUTTERLINES.

① BRIDGE SLAB CONCRETE (3YHPC-S).

② TYPE CURB RAILING CONCRETE (3S52).

③ TYPE P-2 (TL-4) RAILING CONCRETE (3S52).

④ TYPE MOD P-4 (TL-4) RAILING CONCRETE (3S52).

NO.	DATE	BY	CHECK	DESIGN	REVISION / SUBMITTAL

DESIGNED BY: BAW | CHECKED BY: JBW
DRAWN BY: MD | CHECKED BY: AMB

AECOM Kimley»Horn

90% SUBMISSION - 01/22/16

METROPOLITAN COUNCIL

SOUTHWEST Green Line LRT Extension

CIVIL - VOLUME 4G
CSAH 40 (GLENWOOD AVENUE) - WEST
BRIDGE 27C16
SUPERSTRUCTURE DETAILS 7

DISCIPLINE: STRUCTURES
SHEET NAME: CBR27C16-BRG-SUP-007-4

SHEET 30 OF 68

Jan. 14 2016 11:11 am V:\3400_ADC\CAD\SEGMENT E4\PLAN SHEETS\STRUCTURES\27C16\CBR27C16-BRG-SUP-007.dwg By: phil.horton

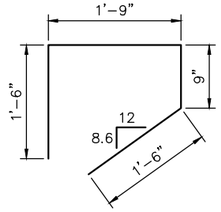

S534E

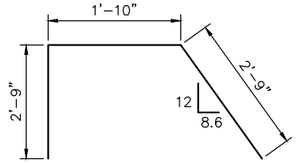

S536E

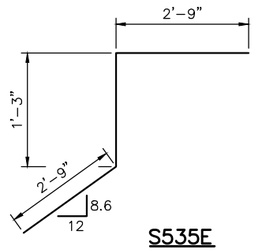

S535E

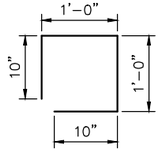

S439E

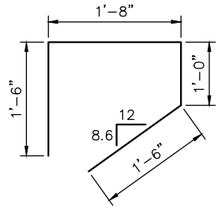

S537E

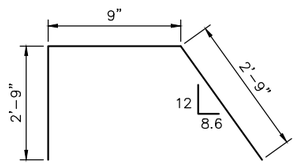

S538E

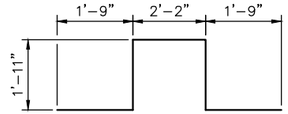

S426E

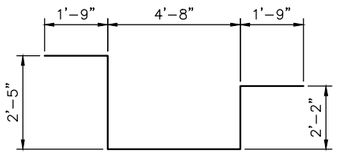

S426E

BILL OF REINFORCEMENT FOR SUPERSTRUCTURE

BAR	NO.	LENGTH	SHAPE	LOCATION
S501E	1 SET OF 82	2'-4" TO 36'-2"	STR.	TRANSVERSE, TOP
S502E	1 SET OF 82	2'-0" TO 35'-10"	STR.	TRANSVERSE, BOT.
S503E	74	36'-11"	STR.	TRANSVERSE, TOP
S504E	74	36'-9"	STR.	TRANSVERSE, BOT.
S505E	1 SET OF 7	32'-8" TO 35'-2"	STR.	TRANSVERSE, TOP
S506E	1 SET OF 7	32'-6" TO 35'-0"	STR.	TRANSVERSE, BOT.
S507E	1 SET OF 15	26'-5" TO 32'-3"	STR.	TRANSVERSE, TOP
S508E	1 SET OF 15	26'-3" TO 32'-1"	STR.	TRANSVERSE, BOT.
S509E	1 SET OF 51	4'-11" TO 26'-0"	STR.	TRANSVERSE, TOP
S510E	1 SET OF 51	4'-9" TO 25'-10"	STR.	TRANSVERSE, BOT.
S511E	1 SET OF 71	4'-7" TO 34'-0"	STR.	TRANSVERSE, TOP
S512E	1 SET OF 71	4'-5" TO 33'-10"	STR.	TRANSVERSE, BOT.
S513E	1 SET OF 7	34'-5" TO 36'-11"	STR.	TRANSVERSE, TOP
S514E	1 SET OF 7	34'-3" TO 36'-9"	STR.	TRANSVERSE, BOT.
S515E	15	37'-2"	STR.	TRANSVERSE, TOP
S516E	15	37'-0"	STR.	TRANSVERSE, BOT.
S517E	51	36'-11"	STR.	TRANSVERSE, TOP
S518E	51	36'-9"	STR.	TRANSVERSE, BOT.
S519E	1 SET OF 8	34'-10" TO 36'-11"	STR.	TRANSVERSE, TOP
S520E	1 SET OF 8	34'-6" TO 36'-9"	STR.	TRANSVERSE, BOT.
S521E	1 SET OF 79	1'-8" TO 34'-5"	STR.	TRANSVERSE, TOP
S522E	1 SET OF 79	1'-4" TO 34'-1"	STR.	TRANSVERSE, BOT.
S523E	32	6'-0"	STR.	BLISTER, TOP & BOT.
S424E	190	60'-0"	STR.	LONGITUDINAL, TOP & BOT.
S425E	190	33'-3"	STR.	LONGITUDINAL, TOP & BOT.
S426E	4	12'-9"	BENT	BLISTER, TOP & BOT.
S527E	8	40'-0"	STR.	PAVING BLOCK, TOP & BOT.
S528E	4	43'-8"	STR.	PAVING BLOCK, TOP & BOT.
S529E	2	58'-9"	STR.	BEGIN BRG., TRANS. TOP & BOT.
S530E	2	60'-0"	STR.	BEGIN BRG., TRANS. TOP & BOT.
S531E	2	59'-6"	STR.	END BRG., TRANS. TOP & BOT.
S532E	2	60'-0"	STR.	END BRG., TRANS. TOP & BOT.
S533E	4	10'-0"	STR.	BEG. & END BRG., TRANS. TOP
S534E	2	5'-6"	BENT	PAVING BLOCK, TOP & BOT.
S535E	2	6'-9"	BENT	CORNER, TOP & BOT.
S536E	2	7'-4"	BENT	CORNER, TOP & BOT.
S537E	2	5'-8"	BENT	PAVING BLOCK, TOP & BOT.
S538E	2	6'-3"	BENT	CORNER, TOP & BOT.
S439E	110	3'-8"	BENT	PAVING BLOCK, TIE

NO.	DATE	BY	CHECK	DESIGN	REVISION / SUBMITTAL

DESIGNED BY: BAW | CHECKED BY: BAW
DRAWN BY: MD | CHECKED BY: AMB

AECOM Kimley»Horn

90% SUBMISSION - 01/22/16

METROPOLITAN COUNCIL

SOUTHWEST Green Line LRT Extension

CIVIL - VOLUME 4G
CSAH 40 (GLENWOOD AVENUE) - WEST
BRIDGE 27C16
SUPERSTRUCTURE DETAILS 8

DISCIPLINE: STRUCTURES
SHEET NAME: CBR27C16-BRG-SUP-007-5

SHEET 31 OF 68

Jan, 14 2016 11:11 am V:\3400_ADC\CAD\SEGMENT E4\PLAN SHEETS\STRUCTURES\27C16\CBR27C16-BRG-SUP-007.dwg By: phil.horton

S. FACE OF N. CURB	
DISTANCE	TOP OF DECK EL.
① 0+00.00	850.47
0+05.00	850.62
0+10.00	850.76
0+15.00	850.89
0+20.00	851.01
0+25.00	851.12
0+30.00	851.22
0+35.00	851.30
0+40.00	851.38
0+45.00	851.43
0+50.00	851.43
0+55.00	851.43
0+60.00	851.43
0+65.00	851.43
0+70.00	851.44
0+75.00	851.44
0+80.00	851.44
0+85.00	851.44
② 0+87.25	851.44

B1 - NORTH FASCIA	
DISTANCE	TOP OF DECK EL.
① 0+00.00	850.46
0+05.00	850.63
0+10.00	850.80
0+15.00	850.95
0+20.00	851.08
0+25.00	851.19
0+30.00	851.28
0+35.00	851.35
0+40.00	851.39
0+45.00	851.42
0+50.00	851.42
0+55.00	851.42
0+60.00	851.42
0+65.00	851.42
0+70.00	851.42
0+75.00	851.42
0+80.00	851.42
0+85.00	851.42
② 0+87.25	851.43

B2	
DISTANCE	TOP OF DECK EL.
① 0+00.00	850.05
0+05.00	850.23
0+10.00	850.42
0+15.00	850.61
0+20.00	850.77
0+25.00	850.91
0+30.00	851.03
0+35.00	851.13
0+40.00	851.22
0+45.00	851.28
0+50.00	851.32
0+55.00	851.34
0+60.00	851.34
0+65.00	851.35
0+70.00	851.35
0+75.00	851.36
0+80.00	851.37
0+85.00	851.37
② 0+87.25	851.37

S. FACE OF N. PARAPET	
DISTANCE	TOP OF DECK EL.
① 0+00.00	849.80
0+05.00	849.97
0+10.00	850.14
0+15.00	850.29
0+20.00	850.43
0+25.00	850.56
0+30.00	850.68
0+35.00	850.79
0+40.00	850.89
0+45.00	850.98
0+50.00	851.06
0+55.00	851.13
0+60.00	851.18
0+65.00	851.23
0+70.00	851.27
0+75.00	851.30
0+80.00	851.32
0+85.00	851.34
② 0+87.25	851.34

B3	
DISTANCE	TOP OF DECK EL.
① 0+00.00	849.70
0+05.00	849.87
0+10.00	850.05
0+15.00	850.22
0+20.00	850.39
0+25.00	850.56
0+30.00	850.72
0+35.00	850.86
0+40.00	850.98
0+45.00	851.08
0+50.00	851.16
0+55.00	851.21
0+60.00	851.25
0+65.00	851.27
0+70.00	851.28
0+75.00	851.29
0+80.00	851.29
0+85.00	851.30
② 0+87.25	851.31

B4	
DISTANCE	TOP OF DECK EL.
① 0+00.00	849.33
0+05.00	849.53
0+10.00	849.73
0+15.00	849.92
0+20.00	850.10
0+25.00	850.27
0+30.00	850.43
0+35.00	850.57
0+40.00	850.70
0+45.00	850.81
0+50.00	850.91
0+55.00	851.00
0+60.00	851.07
0+65.00	851.13
0+70.00	851.18
0+75.00	851.21
0+80.00	851.23
0+85.00	851.24
② 0+87.25	851.25

B5	
DISTANCE	TOP OF DECK EL.
① 0+00.00	848.92
0+05.00	849.12
0+10.00	849.33
0+15.00	849.53
0+20.00	849.74
0+25.00	849.94
0+30.00	850.12
0+35.00	850.28
0+40.00	850.43
0+45.00	850.57
0+50.00	850.70
0+55.00	850.81
0+60.00	850.91
0+65.00	850.99
0+70.00	851.06
0+75.00	851.11
0+80.00	851.15
0+85.00	851.18
② 0+87.25	851.19

B6	
DISTANCE	TOP OF DECK EL.
① 0+00.00	848.54
0+05.00	848.73
0+10.00	848.93
0+15.00	849.12
0+20.00	849.31
0+25.00	849.51
0+30.00	849.69
0+35.00	849.87
0+40.00	850.04
0+45.00	850.19
0+50.00	850.34
0+55.00	850.48
0+60.00	850.60
0+65.00	850.72
0+70.00	850.83
0+75.00	850.93
0+80.00	851.02
0+85.00	851.10
② 0+87.25	851.13

PROFILE GRADE CSAH 40 (GLENWOOD AVE)	
DISTANCE	TOP OF DECK EL.
① 0+00.00	848.33
0+05.00	848.55
0+10.00	848.76
0+15.00	848.96
0+20.00	849.16
0+25.00	849.35
0+30.00	849.53
0+35.00	849.70
0+40.00	849.87
0+45.00	850.02
0+50.00	850.17
0+55.00	850.32
0+60.00	850.45
0+65.00	850.58
0+70.00	850.70
0+75.00	850.81
0+80.00	850.92
0+85.00	851.01
② 0+87.25	851.06

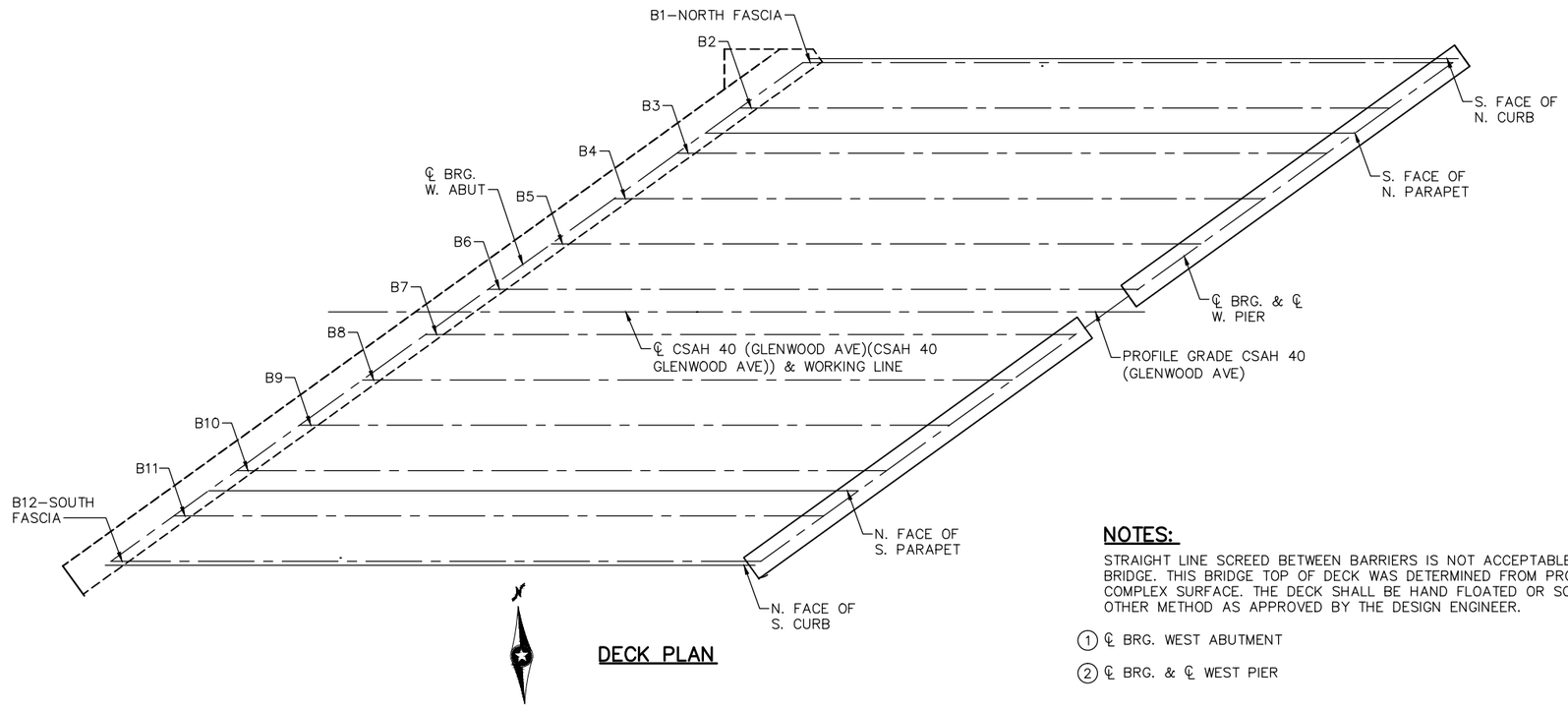

DECK PLAN

NOTES:

STRAIGHT LINE SCREED BETWEEN BARRIERS IS NOT ACCEPTABLE ON THIS BRIDGE. THIS BRIDGE TOP OF DECK WAS DETERMINED FROM PROFILES OF A COMPLEX SURFACE. THE DECK SHALL BE HAND FLOATED OR SCREEDED BY OTHER METHOD AS APPROVED BY THE DESIGN ENGINEER.

① ℄ BRG. WEST ABUTMENT

② ℄ BRG. & ℄ WEST PIER

NO.	DATE	BY	CHECK	DESIGN	REVISION / SUBMITTAL

DESIGNED BY: KAE | CHECKED BY: EJT
DRAWN BY: KAE | CHECKED BY: JBW

AECOM Kimley»Horn

90% SUBMISSION - 01/22/16

METROPOLITAN COUNCIL

SOUTHWEST Green Line LRT Extension

CIVIL - VOLUME 4G
CSAH 40 (GLENWOOD AVENUE) - WEST
BRIDGE 27C16
SUPERSTRUCTURE DETAILS 9

DISCIPLINE: STRUCTURES

SHEET NAME: CBR27C16-BRG-SUP-009-10

SHEET 32 OF 68

Jan. 14 2016 11:12 am V:\3400_ADC\CAD\SEGMENT E4\PLAN SHEETS\STRUCTURES\27C16\CBR27C16-BRG-SUP-009.dwg By: phil.horton

B7	
DISTANCE	TOP OF DECK EL.
① 0+00.00	848.47
0+05.00	848.69
0+10.00	848.90
0+15.00	849.12
0+20.00	849.33
0+25.00	849.55
0+30.00	849.77
0+35.00	849.96
0+40.00	850.13
0+45.00	850.27
0+50.00	850.37
0+55.00	850.46
0+60.00	850.55
0+65.00	850.64
0+70.00	850.72
0+75.00	850.81
0+80.00	850.90
0+85.00	850.99
② 0+87.25	851.03

B8	
DISTANCE	TOP OF DECK EL.
① 0+00.00	848.03
0+05.00	848.35
0+10.00	848.64
0+15.00	848.91
0+20.00	849.17
0+25.00	849.40
0+30.00	849.61
0+35.00	849.80
0+40.00	849.98
0+45.00	850.13
0+50.00	850.26
0+55.00	850.37
0+60.00	850.46
0+65.00	850.56
0+70.00	850.65
0+75.00	850.75
0+80.00	850.84
0+85.00	850.93
② 0+87.25	850.97

B9	
DISTANCE	TOP OF DECK EL.
① 0+00.00	847.73
0+05.00	848.01
0+10.00	848.28
0+15.00	848.55
0+20.00	848.80
0+25.00	849.04
0+30.00	849.26
0+35.00	849.48
0+40.00	849.68
0+45.00	849.86
0+50.00	850.03
0+55.00	850.19
0+60.00	850.34
0+65.00	850.47
0+70.00	850.59
0+75.00	850.69
0+80.00	850.78
0+85.00	850.87
② 0+87.25	850.91

B10	
DISTANCE	TOP OF DECK EL.
① 0+00.00	847.43
0+05.00	847.69
0+10.00	847.94
0+15.00	848.20
0+20.00	848.45
0+25.00	848.71
0+30.00	848.96
0+35.00	849.19
0+40.00	849.42
0+45.00	849.63
0+50.00	849.82
0+55.00	850.01
0+60.00	850.17
0+65.00	850.33
0+70.00	850.47
0+75.00	850.60
0+80.00	850.71
0+85.00	850.81
② 0+87.25	850.86

N. FACE OF S. PARAPET	
DISTANCE	TOP OF DECK EL.
① 0+00.00	847.30
0+05.00	847.59
0+10.00	847.88
0+15.00	848.16
0+20.00	848.42
0+25.00	848.67
0+30.00	848.91
0+35.00	849.14
0+40.00	849.35
0+45.00	849.56
0+50.00	849.75
0+55.00	849.93
0+60.00	850.10
0+65.00	850.26
0+70.00	850.41
0+75.00	850.54
0+80.00	850.67
0+85.00	850.78
② 0+87.25	850.83

B11	
DISTANCE	TOP OF DECK EL.
① 0+00.00	846.92
0+05.00	847.24
0+10.00	847.55
0+15.00	847.85
0+20.00	848.14
0+25.00	848.42
0+30.00	848.68
0+35.00	848.93
0+40.00	849.17
0+45.00	849.40
0+50.00	849.61
0+55.00	849.81
0+60.00	850.00
0+65.00	850.17
0+70.00	850.34
0+75.00	850.49
0+80.00	850.62
0+85.00	850.75
② 0+87.25	850.80

B12 - SOUTH FASCIA	
DISTANCE	TOP OF DECK EL.
① 0+00.00	846.56
0+05.00	846.82
0+10.00	847.09
0+15.00	847.35
0+20.00	847.62
0+25.00	847.88
0+30.00	848.14
0+35.00	848.41
0+40.00	848.67
0+45.00	848.93
0+50.00	849.18
0+55.00	849.42
0+60.00	849.65
0+65.00	849.87
0+70.00	850.08
0+75.00	850.28
0+80.00	850.47
0+85.00	850.65
② 0+87.25	850.73

N. FACE OF S. CURB	
DISTANCE	TOP OF DECK EL.
① 0+00.00	846.53
0+05.00	846.85
0+10.00	847.16
0+15.00	847.47
0+20.00	847.76
0+25.00	848.03
0+30.00	848.30
0+35.00	848.56
0+40.00	848.80
0+45.00	849.04
0+50.00	849.26
0+55.00	849.47
0+60.00	849.66
0+65.00	849.84
0+70.00	850.03
0+75.00	850.22
0+80.00	850.41
0+85.00	850.59
② 0+87.25	850.68

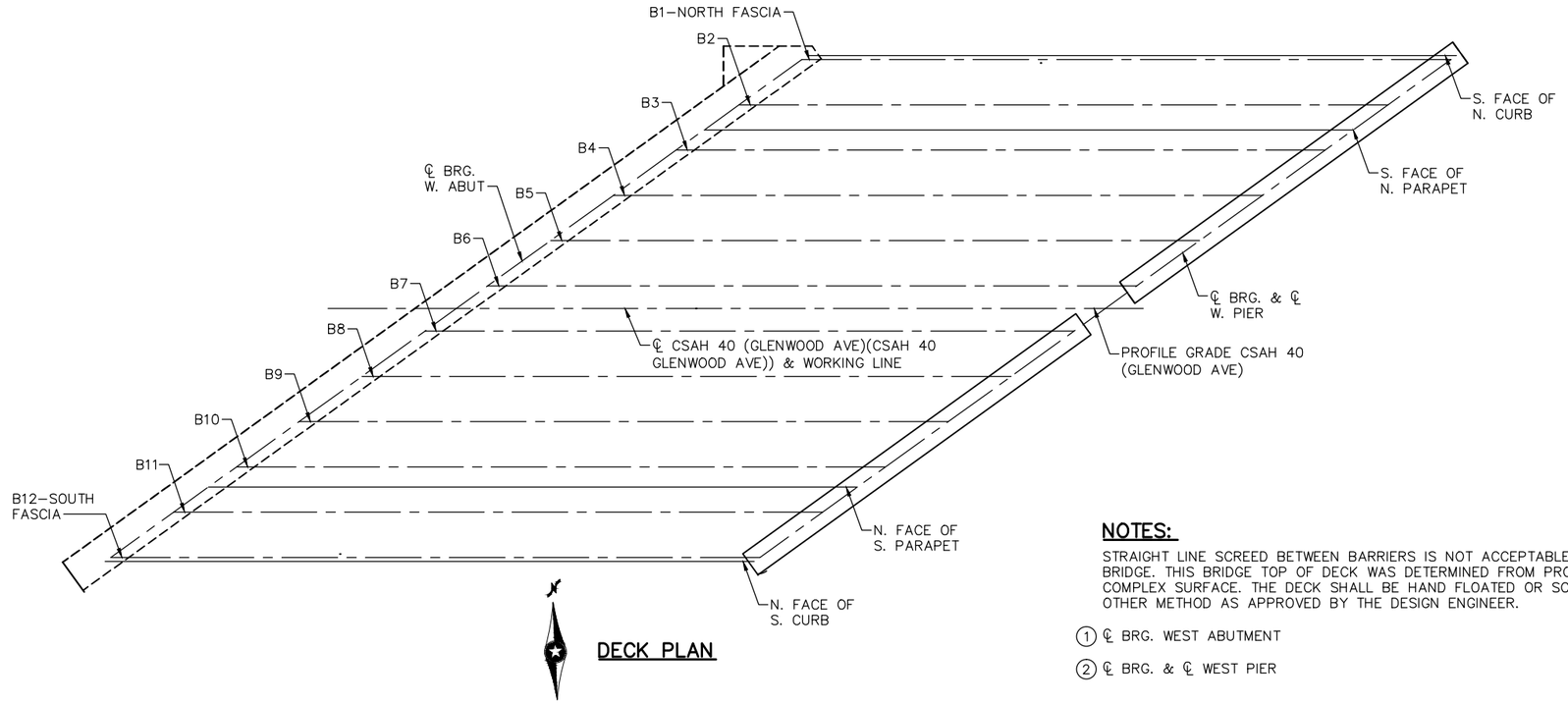

DECK PLAN

NOTES:

STRAIGHT LINE SCREED BETWEEN BARRIERS IS NOT ACCEPTABLE ON THIS BRIDGE. THIS BRIDGE TOP OF DECK WAS DETERMINED FROM PROFILES OF A COMPLEX SURFACE. THE DECK SHALL BE HAND FLOATED OR SCREEDED BY OTHER METHOD AS APPROVED BY THE DESIGN ENGINEER.

① ℄ BRG. WEST ABUTMENT

② ℄ BRG. & ℄ WEST PIER

NO.	DATE	BY	CHECK	DESIGN	REVISION / SUBMITTAL

DESIGNED BY: KAE | CHECKED BY: EJT
DRAWN BY: KAE | CHECKED BY: JBW

AECOM Kimley»Horn

90% SUBMISSION - 01/22/16

METROPOLITAN COUNCIL

SOUTHWEST Green Line LRT Extension

CIVIL - VOLUME 4G
CSAH 40 (GLENWOOD AVENUE) - WEST
BRIDGE 27C16
SUPERSTRUCTURE DETAILS 10

DISCIPLINE: STRUCTURES
SHEET NAME: CBR27C16-BRG-SUP-010-11

SHEET 33 OF 68

Jan, 14 2016 11:12 am V:\3400_ADC\CAD\SEGMENT E4\PLAN SHEETS\STRUCTURES\27C16\CBR27C16-BRG-SUP-009.dwg By: phil.horton

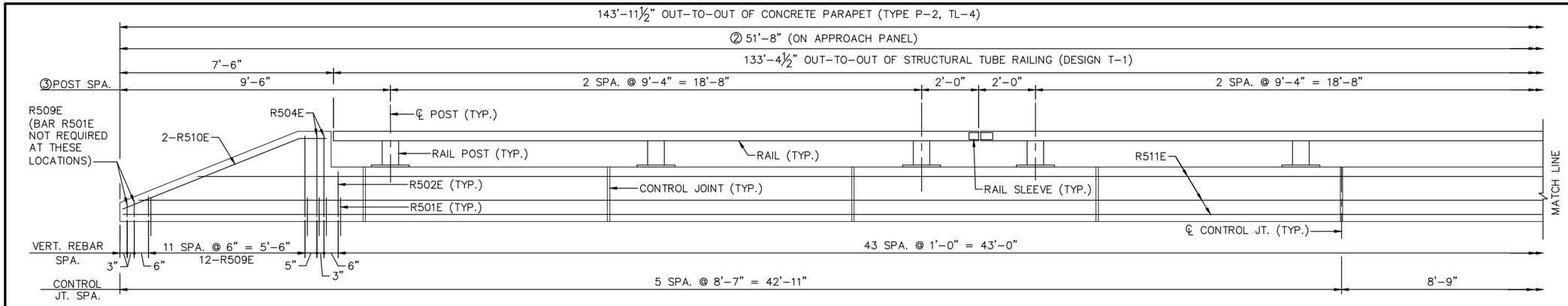

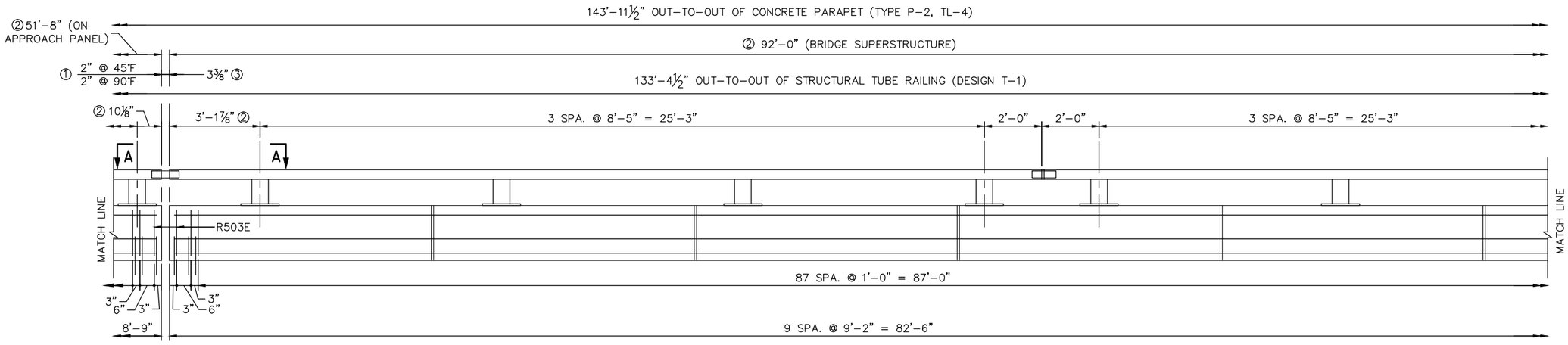

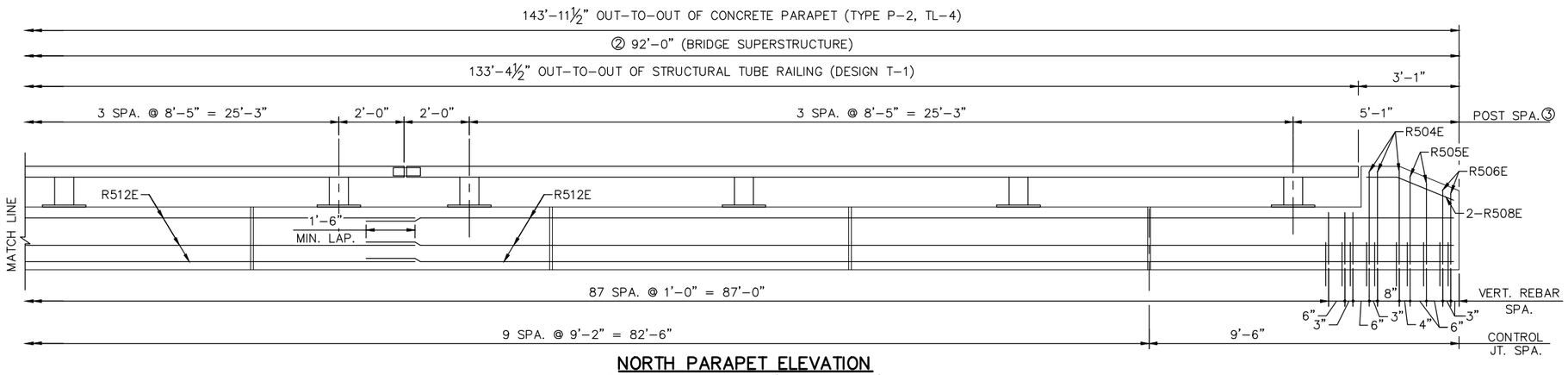

NORTH PARAPET ELEVATION

INSIDE ELEVATON SHOWN (LOOKING NORTH)
CONCRETE WEARING SURFACE NOT SHOWN

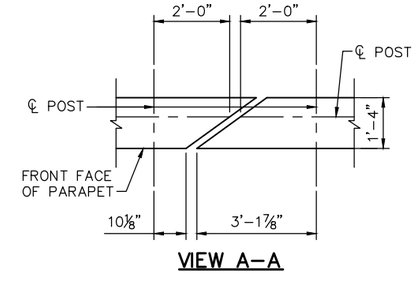

VIEW A-A

NOTES:

1. PERPENDICULAR TO CENTERLINE OF EXPANSION JOINT.
2. DIMENSION ALONG FRONT FACE OF PARAPET.
3. PERPENDICULAR TO FRONT FACE OF PARAPET.

NO.	DATE	BY	CHECK	DESIGN	REVISION / SUBMITTAL

DESIGNED BY: BAW CHECKED BY: BLF
DRAWN BY: LMT CHECKED BY: BLF

AECOM Kimley»Horn

90% SUBMISSION - 01/22/16

METROPOLITAN COUNCIL

SOUTHWEST Green Line LRT Extension

CIVIL - VOLUME 4G
CSAH 40 (GLENWOOD AVENUE) - WEST
BRIDGE 27C16
RAILING DETAILS 1

DISCIPLINE: STRUCTURES

SHEET NAME: CBR27C16-BRG-RAL-001-1

SHEET 34 OF 68

Jan, 14 2016 11:12 am V:\3400_ADC\CAD\SEGMENT E4\PLAN SHEETS\STRUCTURES\27C16\CBR27C16-BRG-RAL-001.dwg By: phil.horton

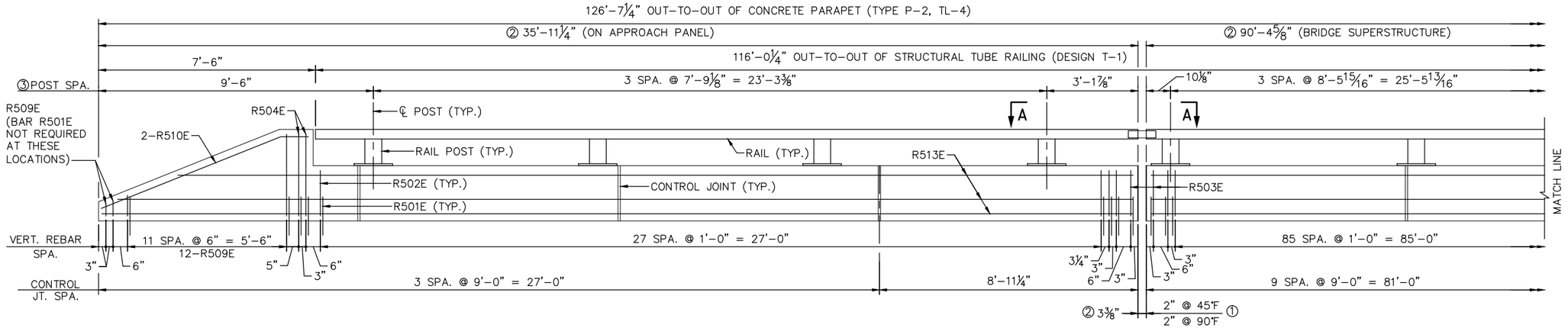

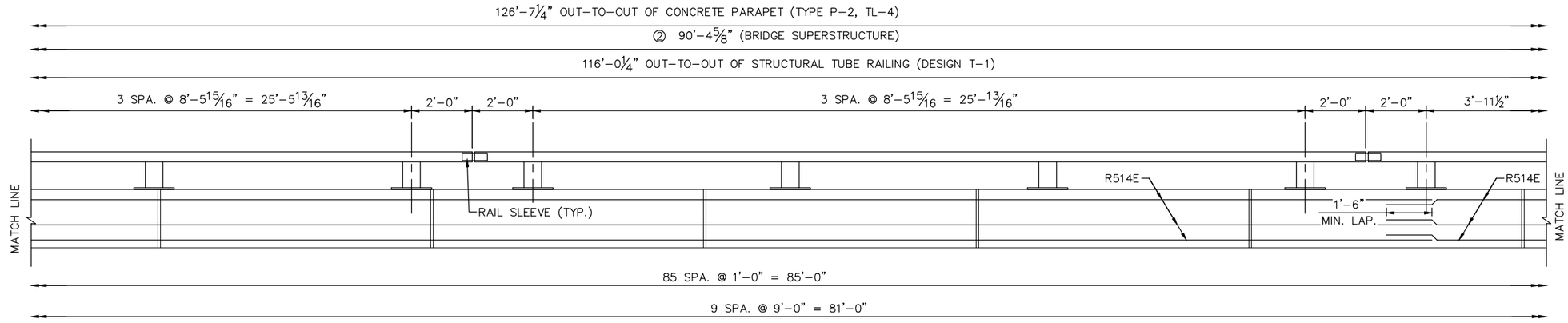

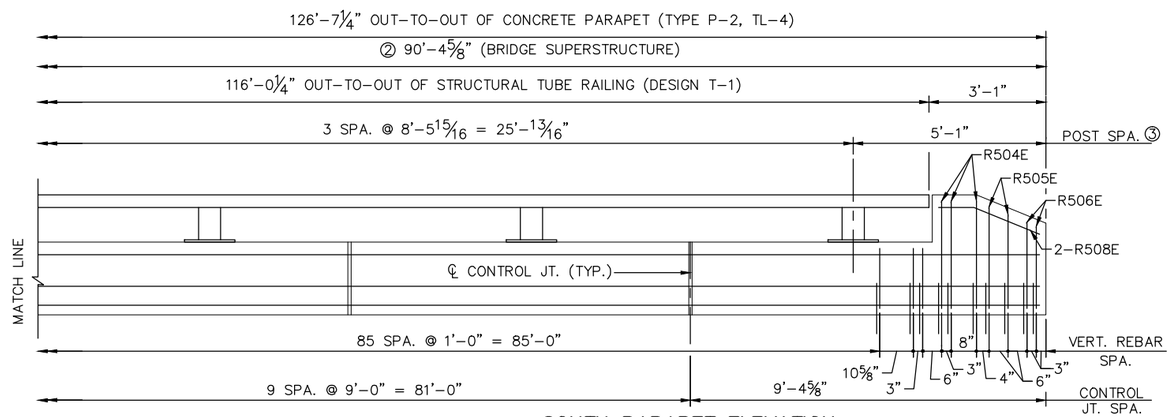

SOUTH PARAPET ELEVATION
INSIDE ELEVATON SHOWN (LOOKING NORTH)
CONCRETE WEARING SURFACE NOT SHOWN

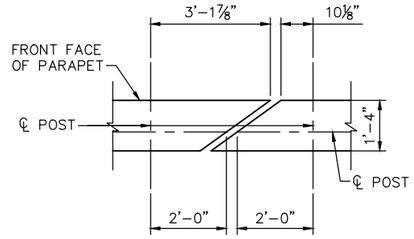

VIEW A-A

NOTES:
1. PERPENDICULAR TO CENTERLINE OF EXPANSION JOINT.
2. DIMENSION ALONG FRONT FACE OF PARAPET.
3. PERPENDICULAR TO FRONT FACE OF PARAPET.

NO.	DATE	BY	CHECK	DESIGN	REVISION / SUBMITTAL

DESIGNED BY: BAW | CHECKED BY: BLF
DRAWN BY: LMT | CHECKED BY: BLF

AECOM Kimley»Horn

90% SUBMISSION - 01/22/16

METROPOLITAN COUNCIL

SOUTHWEST Green Line LRT Extension

CIVIL - VOLUME 4G
CSAH 40 (GLENWOOD AVENUE) - WEST
BRIDGE 27C16
RAILING DETAILS 2

DISCIPLINE: STRUCTURES
SHEET NAME: CBR27C16-BRG-RAL-001-2

SHEET 35 OF 68

Jan, 14 2016 11:12 am V:\3400_ADC\CAD\SEGMENT E4\PLAN SHEETS\STRUCTURES\27C16\CBR27C16-BRG-RAL-001.dwg By: phil.horton

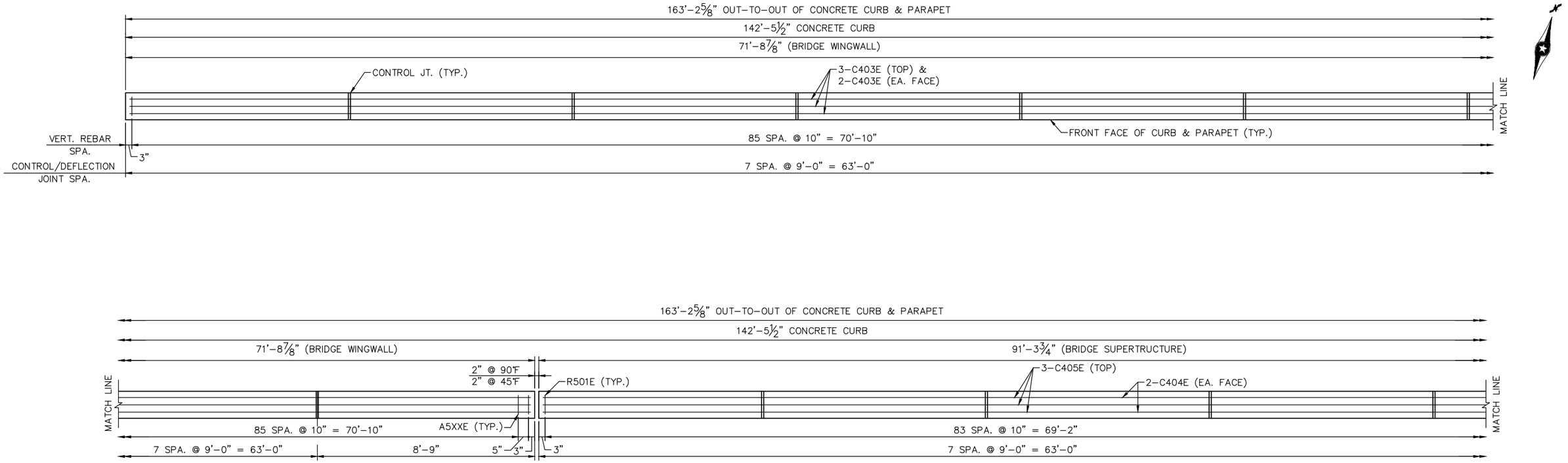

NORTH CURB/PARAPET PLAN

(BLISTER NOT SHOWN)

NO.	DATE	BY	CHECK	DESIGN	REVISION / SUBMITTAL

DESIGNED BY: BAW | CHECKED BY: BLF
DRAWN BY: LMT | CHECKED BY: BLF

AECOM Kimley»Horn

90% SUBMISSION - 01/22/16

METROPOLITAN COUNCIL

SOUTHWEST Green Line LRT Extension

CIVIL - VOLUME 4G
CSAH 40 (GLENWOOD AVENUE) - WEST
BRIDGE 27C16
RAILING DETAILS 3

DISCIPLINE: STRUCTURES

SHEET NAME: CBR27C16-BRG-RAL-001-3

SHEET 36 OF 68

Jan. 14 2016 11:12 am V:\3400_ADC\CAD\SEGMENT E4\PLAN SHEETS\STRUCTURES\27C16\CBR27C16-BRG-RAL-001.dwg By: phil.horton

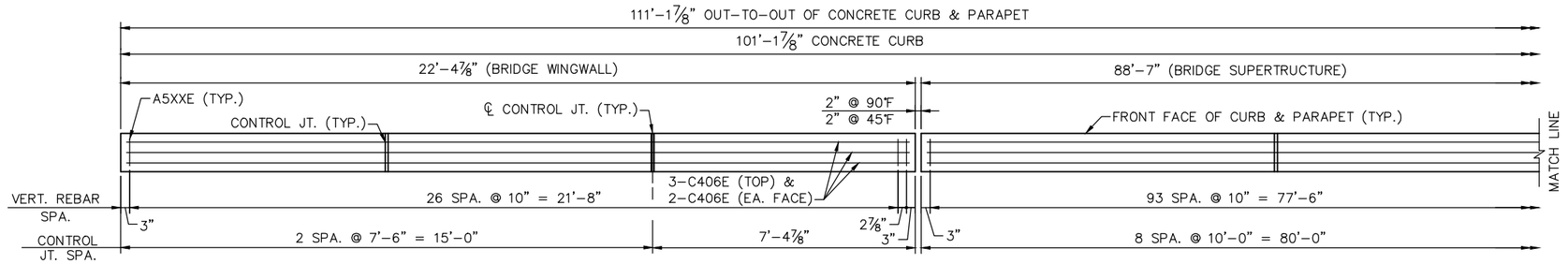

SOUTH CURB/PARAPET PLAN
(BLISTER NOT SHOWN)

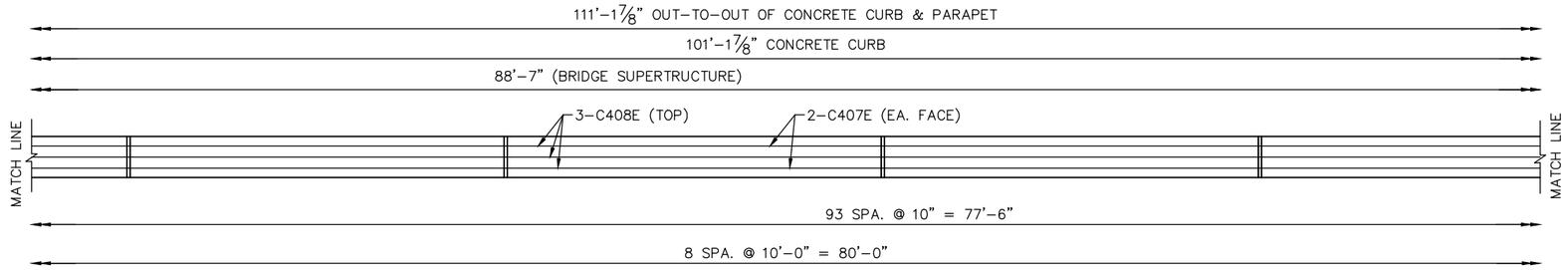

SOUTH CURB/PARAPET PLAN
(BLISTER NOT SHOWN)

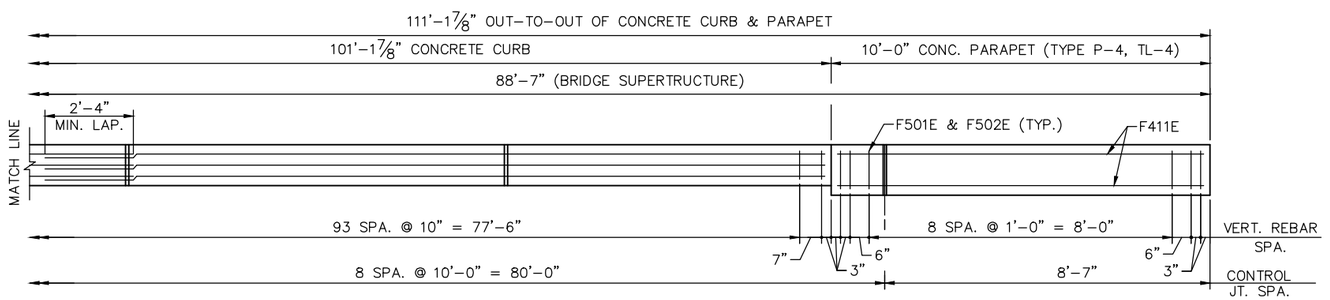

SOUTH CURB/PARAPET PLAN
(BLISTER NOT SHOWN)

NO.	DATE	BY	CHECK	DESIGN	REVISION / SUBMITTAL

DESIGNED BY: BAW | CHECKED BY: BLF
DRAWN BY: LMT | CHECKED BY: BLF

AECOM Kimley»Horn

90% SUBMISSION - 01/22/16

METROPOLITAN COUNCIL

SOUTHWEST Green Line LRT Extension

CIVIL - VOLUME 4G
CSAH 40 (GLENWOOD AVENUE) - WEST
BRIDGE 27C16
RAILING DETAILS 4

DISCIPLINE: STRUCTURES
SHEET NAME: CBR27C16-BRG-RAL-001-4

SHEET 37 OF 68

Jan, 14 2016 11:12 am v:\3400_ADC\CAD\SEGMENT E4\PLAN SHEETS\STRUCTURES\27C16\CBR27C16-BRG-RAL-001.dwg By: phil.horton

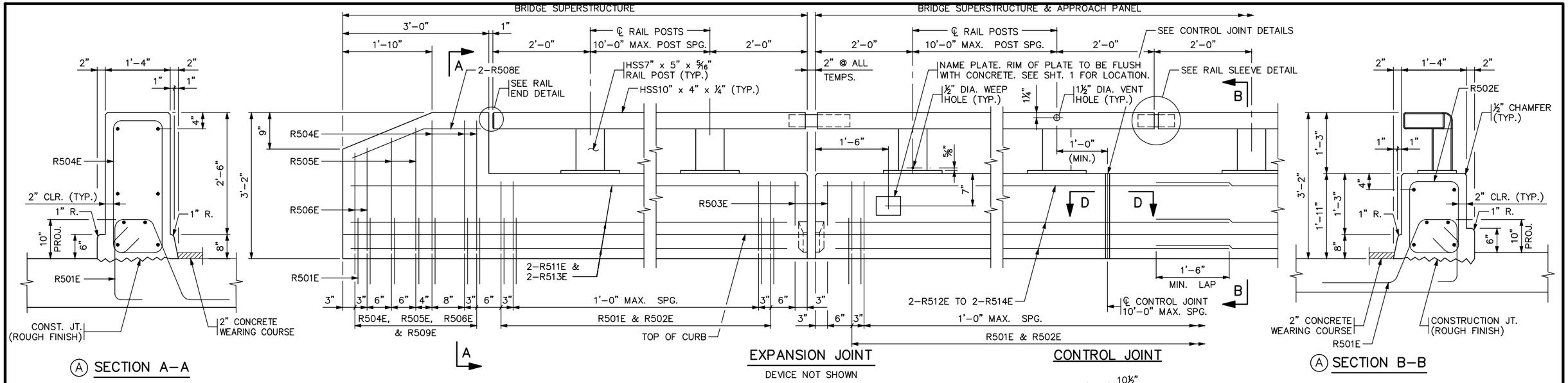

Ⓐ SECTION A–A

Ⓐ SECTION B–B

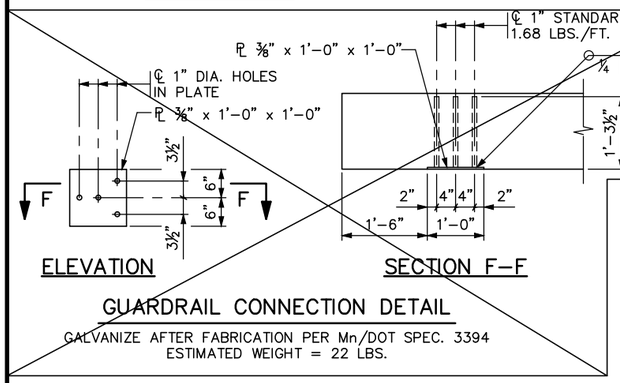

ELEVATION

SECTION F–F

GUARDRAIL CONNECTION DETAIL

GALVANIZE AFTER FABRICATION PER Mn/DOT SPEC. 3394
ESTIMATED WEIGHT = 22 LBS.

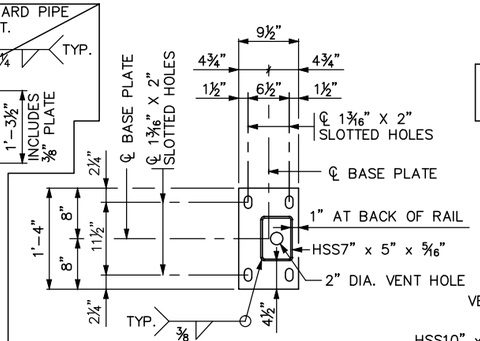

BASE PLATE

Ⓐ INSIDE ELEVATION OF RAILING

CONCRETE WEARING COURSE NOT SHOWN

RAIL MEETS TEST LEVEL 4 REQUIREMENTS OF NCHRP REPORT 350

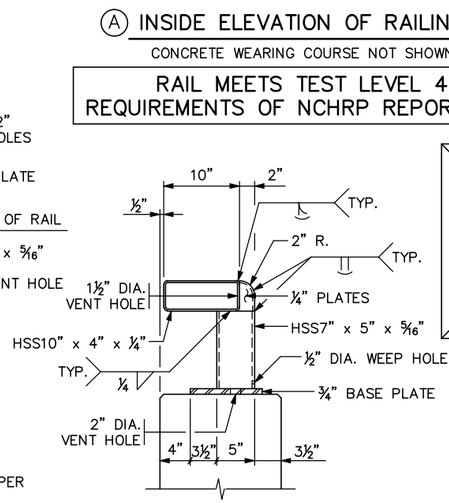

STRUCTURAL TUBE RAIL DETAIL

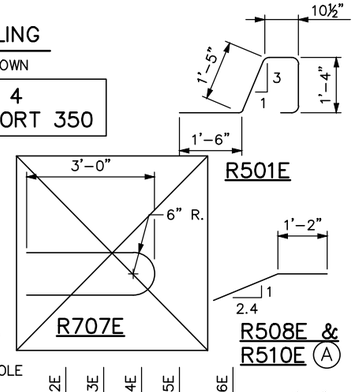

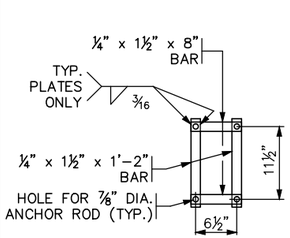

SECTION G–G

ANCHOR BAR ALTERNATE

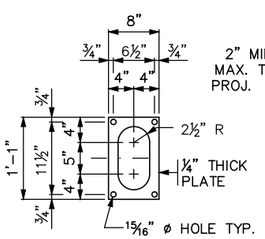

SECTION G–G

ANCHOR PLATE ALTERNATE

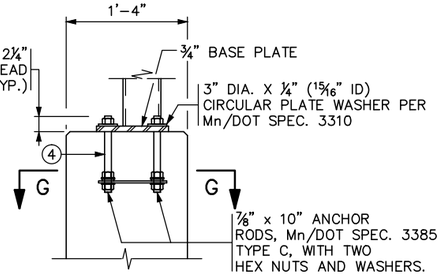

ANCHOR DETAIL

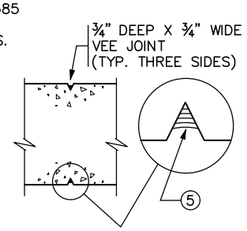

SECTION D–D

CONTROL JOINT DETAILS

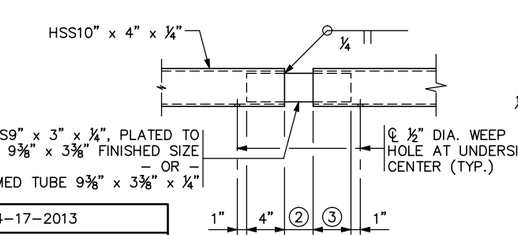

RAIL SLEEVE DETAIL

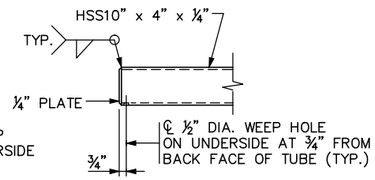

RAIL END DETAIL

BILL OF REINFORCEMENT FOR PARAPET

BAR	NO.	LENGTH	SHAPE	LOCATION
R501E	301	5'–7"	BENT	PARAPET VERTICAL
R502E	255	6'–1"	BENT	PARAPET VERTICAL
R503E	4	4'–11"	BENT	PARAPET VERTICAL
R504E	10	8'–7"	BENT	PARAPET VERTICAL
R505E	1 SET OF 4	7'–11" TO 8'–3"	BENT	PARAPET VERTICAL
R506E	1 SET OF 4	7'–3" TO 7'–5"	BENT	PARAPET VERTICAL
~~R707E~~	~~—~~	~~6' 7"~~	~~BENT~~	~~PARAPET END~~
R508E	4	2'–9"	BENT	PARAPET END LONGIT.
R509E	1 SET OF 28	3'–9" TO 8'–7"	BENT	PARAPET LONGITUDINAL
R510E	4	6'–8"	BENT	PARAPET LONGITUDINAL
R511E	1 SET OF 6	48'–9" TO 51'–4"	STR.	PARAPET LONGITUDINAL
R512E	12	46'–7"	STR.	PARAPET LONGITUDINAL
R513E	1 SET OF 6	33'–0" TO 35'–8"	STR.	PARAPET LONGITUDINAL
R514E	12	45'–9"	STR.	PARAPET LONGITUDINAL

GENERAL NOTES

~~FOR PAYMENT OF "TYPE P–2 (TL–4) BARRIER CONCRETE (3S52)" MEASURE LENGTH OF CONCRETE BARRIER BETWEEN END FACES. CONCRETE PARAPET = 396 LBS./FT. (0.098 CU. YDS./FT.)~~

~~FOR PAYMENT OF "STRUCTURAL TUBE RAILING DESIGN T–1" MEASURE LENGTH OF RAIL FROM END TO END OF TUBING. DO NOT DEDUCT FOR JOINTS.~~

FINISH ALL EDGES OF RAIL WITH ½" CHAMFER, EXCEPT WHERE OTHERWISE NOTED.

MAX. SPACING OF CONCRETE CONTROL JOINTS SHALL BE 10 FT.

PROVIDE CORRECT ALIGNMENT FOR ANCHORAGES BY PLACING THEM ACCURATELY AND NORMAL TO GRADE. SEE SPECIAL PROVISIONS.

PROVIDE STRUCTURAL STEEL AND PLATE WASHERS PER Mn/DOT SPEC. 3310. PROVIDE STRUCTURAL TUBES PER A.S.T.M. A500, GRADE B AS SPECIFIED IN Mn/DOT SPEC. 3361.

GALVANIZE BOLTS, NUTS, AND WASHERS PER Mn/DOT SPEC. 3392.

GALVANIZE ALL OTHER STRUCTURAL STEEL PER Mn/DOT SPEC. 3394, AFTER FABRICATION.

~~PROVIDE GUARDRAIL CONNECTION STRUCTURAL STEEL PER Mn/DOT SPEC. 3306.~~

~~GUARDRAIL CONNECTION AND NAME PLATE IS INCIDENTAL TO "TYPE P–2 (TL–4) BARRIER CONCRETE (3Y46 OR 3Y46A)".~~

~~PRICE BID FOR "STRUCTURAL TUBE RAILING DESIGN T–1" INCLUDES ANCHORAGES AND ALL MATERIAL ABOVE TOP OF CONCRETE BARRIER.~~

~~ALL MATERIAL IN THE CONCRETE BARRIER IS LISTED IN SUMMARY OF QUANTITIES FOR SUPERSTRUCTURE.~~

SEE SPECIAL PROVISIONS FOR PAINT REQUIREMENTS.

CONTINUOUSLY GROUND THE METAL RAILING AS DIRECTED IN THE SPECIAL PROVISIONS. REFER TO THE ELECTRICAL PLANS AND ELECTRICAL SPECIAL PROVISIONS FOR DETAILS REGARDING BONDING MULTIPLE ELECTRICAL GROUNDING SYSTEMS.

① MAKE THICKNESS THE SAME AS SLAB IN SECTION B–B.

② 1" AT RAILING JOINTS. AT EXPANSION JOINTS, MAKE 1" LARGER THAN GAP IN EXPANSION JOINTS.

③ 5" AT RAILING JOINTS AND 8" AT EXPANSION JOINTS.

④ SUBSTITUTION OF CHEMICAL ANCHOR RODS FOR CAST–IN–PLACE ANCHORAGE IS NOT PERMITTED.

⑤ SEE SPECIAL PROVISIONS FOR JOINT SEALING REQUIREMENTS.

REVISED: 04–17–2013

APPROVED: MARCH 30, 2010
Daniel L Hergott
STATE BRIDGE ENGINEER

SHEET MODIFICATION:
Ⓐ DENOTES MODIFICATION TO STANDARD SHEET

CERTIFIED BY _____ XX\XX\XX
LICENSED PROFESSIONAL ENGINEER — DATE
NAME: ENGINEER LIC. NO. #####

TITLE: STRUCTURAL TUBE RAILING (DESIGN T–1) AND CONCRETE PARAPET (TYPE P–2, TL–4) (WITH INTEGRAL END POST)

DRAFT–WORK IN PROCESS

FIG. 5–397.157 (MOD.)

DES: BAW	DR: LMT	APPROVED:
CHK: BLF	CHK: JBW	

SHEET NO. 38 OF 68 SHEETS

BRIDGE NO. 27C16

Jan. 14 2016 11:13 am V:\3400_ADC\CAD\SEGMENT E4\PLAN SHEETS\STRUCTURES\27C16\CBR27C16–BRG–RAL–002.dwg By: phil.horton

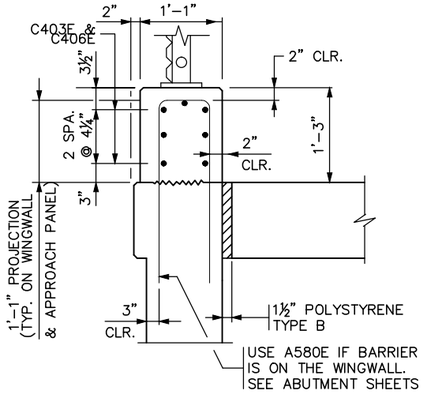

SECTION A–A Ⓐ

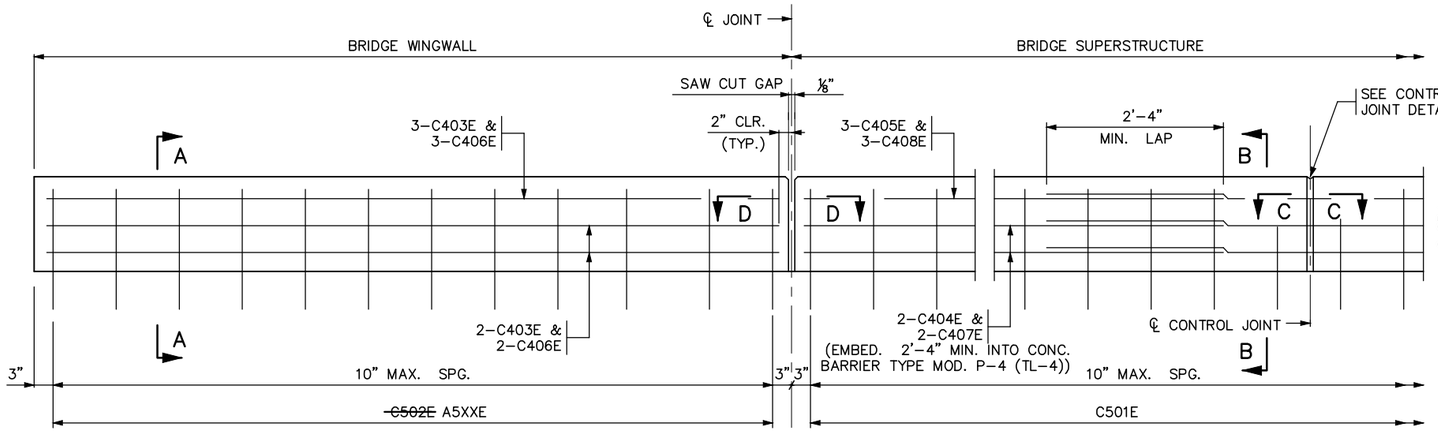

JOINT AT ABUTMENT Ⓐ

CONTROL JOINT

INTEGRAL OR SEMI–INTEGRAL ABUTMENT SEE DETAIL "A" FOR PARAPET ABUTMENT

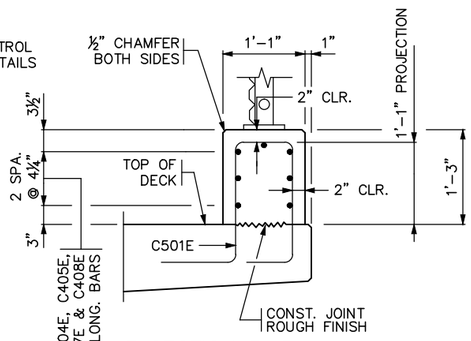

Ⓐ SECTION B–B

INSIDE ELEVATION OF CONCRETE CURB

CURB DOES NOT MEET CRASH TEST REQUIREMENTS OF NCHRP REPORT 350

BILL OF REINFORCEMENT FOR CURB				
BAR	NO.	LENGTH	SHAPE	LOCATION
Ⓐ C501E	181	5'-8"	BENT	CURB, VERTICAL
~~C502E~~	~~-~~	~~-~~	~~-~~	~~-~~
C403E	14	36'-11"	STR.	CURB, LONGIT.
C404E	8	37'-11"	STR.	CURB, LONGIT.
C405E	6	36'-4"	STR.	CURB, LONGIT.
C406E	7	22'-0"	STR.	CURB, LONGIT.
C407E	8	41'-11"	STR.	CURB, LONGIT.
C408E	6	40'-4"	STR.	CURB, LONGIT.

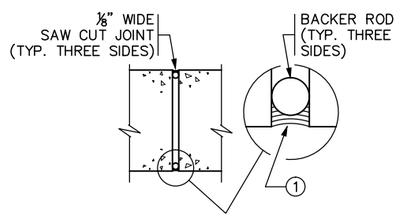

SECTION D–D

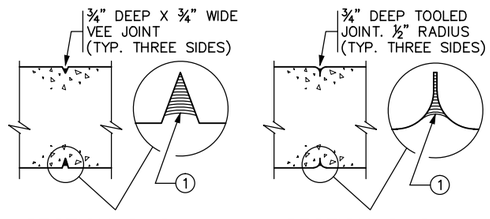

SECTION C–C
CONTRACTOR OPTION 1

SECTION C–C
CONTRACTOR OPTION 2

CONTROL JOINT DETAILS

WHEN USING SLIP FORM METHOD TO PLACE THE CONCRETE, CUT JOINT 3 INCHES DEEP USING MARGIN TROWEL OR SIMILAR MEANS IMMEDIATELY AFTER CONCRETE PLACEMENT (TYP. THREE SIDES)

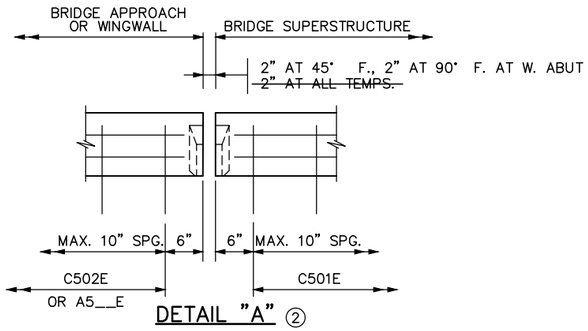

DETAIL "A" ②

(USE ONLY WITH STRIP SEAL EXPANSION DEVICE)
(EXPANSION DEVICE NOT SHOWN)

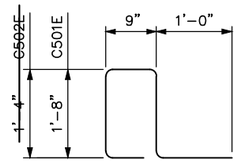

Ⓐ C501E, ~~C502E~~

GENERAL NOTES

CONTINUOUSLY GROUND ALL METAL RAILINGS; SEE THE SPECIAL PROVISIONS. REFER TO THE ELECTRICAL PLANS AND ELECTRICAL SPECIAL PROVISIONS FOR DETAILS REGARDING BONDING MULTIPLE ELECTRICAL GROUNDING SYSTEMS.

~~PAYMENT LENGTH SHALL BE MEASURED BETWEEN THE OUTSIDE FACES OF THE CONCRETE CURB.~~

Ⓐ CONCRETE CURB = 204 LBS./FT. (0.050 CU. YDS./FT.)

FINISH ALL EDGES OF CURB WITH ½" CHAMFER, EXCEPT WHERE OTHERWISE NOTED.

MAXIMUM SPACING OF CONTROL JOINTS ON SUPERSTRUCTURE, APPROACH AND WINGWALL SHALL BE 10 FT. SEE SUPERSTRUCTURE SHEET FOR JOINT SPACING.

~~CONCRETE CURB QUANTITIES ARE LISTED IN SUMMARY OF QUANTITIES FOR SUPERSTRUCTURE.~~

① JOINT SEALANT PER MnDOT APPROVED/QUALIFIED PRODUCTS LIST – CRACK AND JOINT MATERIALS – SILICONE JOINT SEALERS.

② REFER TO STANDARD FIGURE 5–397.632 FOR COVER PLATE DETAILS.

REVISION:

APPROVED: NOVEMBER 6, 2013
Nancy Daubenberger
STATE BRIDGE ENGINEER

SHEET MODIFICATION:
Ⓐ DENOTES MODIFICATION TO STANDARD SHEET

CERTIFIED BY _____ XX\XX\XX
LICENSED PROFESSIONAL ENGINEER — DATE
NAME: ENGINEER LIC. NO. #####

TITLE: CONCRETE CURB ~~FOR USE WITH ORNAMENTAL RAILING~~

DRAFT-WORK IN PROCESS

FIG. 5–397.167 (MOD.)

DES: BAW	DR: LMT	APPROVED:
CHK: BLF	CHK: JBW	

SHEET NO. 39 OF 68 SHEETS

BRIDGE NO. 27C16

Jan. 14 2016 11:13 am V:\3400_ADC\CAD\SEGMENT E4\PLAN SHEETS\STRUCTURES\27C16\CBR27C16-BRG-RAL-002.dwg By: phil.horton

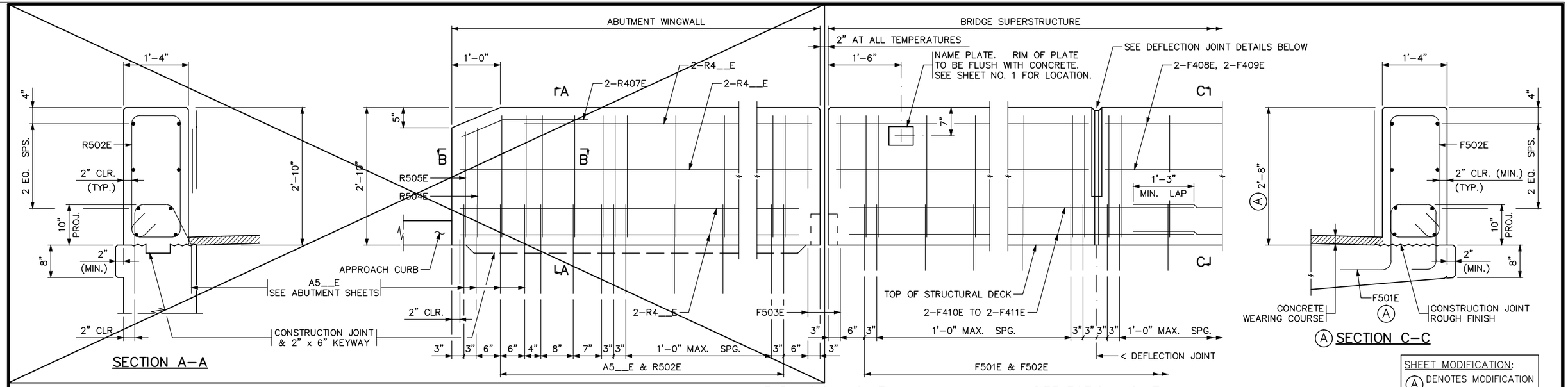

SECTION A–A

SECTION C–C

EXPANSION JOINT

DEFLECTION JOINT

EXPANSION DEVICE NOT SHOWN

Ⓐ INSIDE ELEVATION OF BARRIER

CONCRETE WEARING COURSE NOT SHOWN

BARRIER MEETS TEST LEVEL 4 REQUIREMENTS OF NCHRP REPORT 350

SHEET MODIFICATION:
Ⓐ DENOTES MODIFICATION TO STANDARD SHEET

BILL OF REINFORCEMENT FOR BARRIER				
BAR	NO.	LENGTH	SHAPE	LOCATION
Ⓐ F501E	40	5'-1"	BENT	BARRIER VERTICAL
Ⓐ F502E	40	7'-7"	BENT	BARRIER VERTICAL
~~F503E~~	~~0~~	~~5'-7"~~	~~BENT~~	~~BARRIER VERTICAL~~
~~F504E~~	~~0~~	~~7'-5"~~	~~BENT~~	~~BARRIER VERTICAL~~
~~F505E~~	~~0~~	~~7'-3"~~	~~BENT~~	~~BARRIER VERTICAL~~
~~F706E~~	~~0~~	~~6'-7"~~	~~BENT~~	~~BARRIER END~~
~~F407E~~	~~0~~	~~2'-8"~~	~~BENT~~	~~BARRIER END LONGIT.~~
Ⓐ F408E	4	9'-7"	STR.	BARRIER LONGITUDINAL
Ⓐ F409E	4	10'-4"	STR.	BARRIER LONGITUDINAL
Ⓐ F410E	4	20'-5"	STR.	BARRIER LONGITUDINAL
Ⓐ F411E	4	9'-8"	STR.	BARRIER LONGITUDINAL
Ⓐ F412E	4	9'-5"	STR.	BARRIER LONGITUDINAL

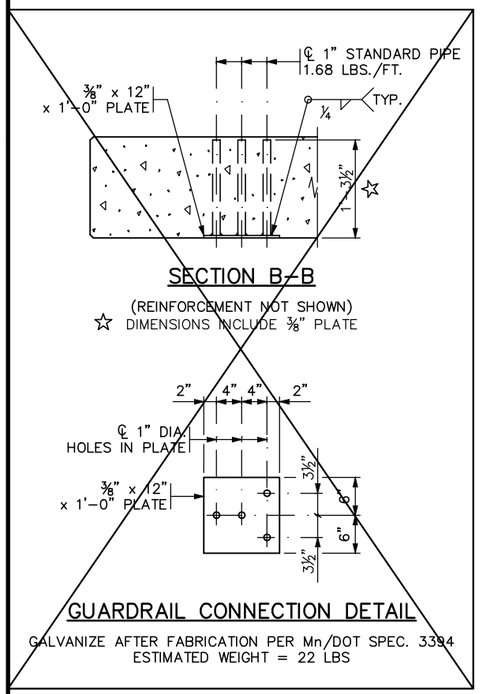

SECTION B–B

(REINFORCEMENT NOT SHOWN)
☆ DIMENSIONS INCLUDE ⅜" PLATE

GUARDRAIL CONNECTION DETAIL

GALVANIZE AFTER FABRICATION PER Mn/DOT SPEC. 3394
ESTIMATED WEIGHT = 22 LBS

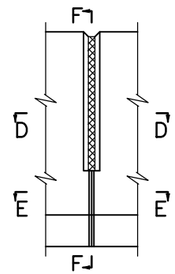

ELEVATION

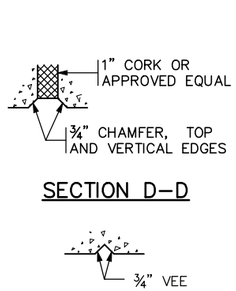

SECTION D–D

SECTION E–E

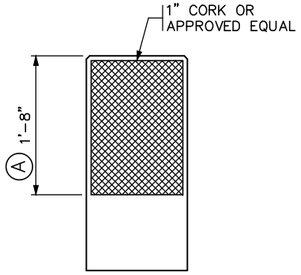

Ⓐ SECTION F–F

Ⓐ DEFLECTION JOINT DETAILS

ESTIMATED QUANTITY OF CORK PER JOINT = 2.15 SQ. FT.

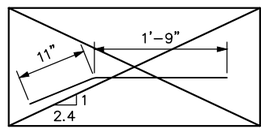

R407E

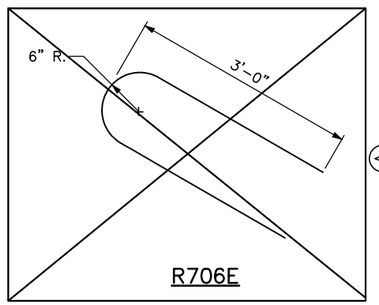

R706E

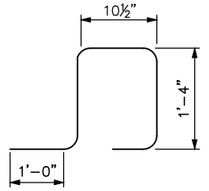

Ⓐ F501E

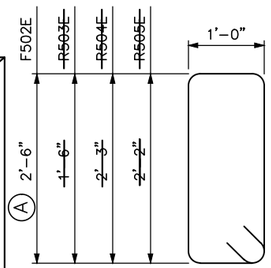

F502E, ~~R503E, R504E & R505E~~

GENERAL NOTES

LENGTH OF "TYPE MOD P-4 RAILING CONCRETE (3S52) SHALL BE MEASURED BETWEEN THE OUTSIDE FACES OF THE CONCRETE BARRIER.

CONCRETE BARRIER = 579 LBS./FT. (0.143 CU. YDS./FT.)

FINISH ALL EDGES OF BARRIER WITH ½" VEE, EXCEPT WHERE OTHERWISE NOTED.

MAXIMUM SPACING OF CONCRETE DEFLECTION JOINTS SHALL BE 20 FT.

SEE SUPERSTRUCTURE SHEET FOR JOINT SPACING.

~~GUARDRAIL CONNECTION TO BE STRUCTURAL STEEL, Mn/DOT SPEC. 3306.~~

~~GALVANIZE STRUCTURAL STEEL PER Mn/DOT SPEC. 3394 AFTER FABRICATION.~~

~~GUARDRAIL CONNECTION, CORK, AND NAME PLATE TO BE CONSIDERED INCIDENTAL TO "TYPE P-4 (TL-4) RAILING CONCRETE (3Y46 OR 3Y46A)".~~

~~BARRIER QUANTITIES ARE LISTED IN SUMMARY OF QUANTITIES FOR SUPERSTRUCTURE.~~

REVISED: 04-17-2013

APPROVED: JULY 25, 2005
Daniel L. Thompson
STATE BRIDGE ENGINEER

DRAFT-WORK IN PROCESS

FIG. 5-397.173 (MOD)

CERTIFIED BY _____ XX\XX\XX
LICENSED PROFESSIONAL ENGINEER — DATE

NAME: **ENGINEER** LIC. NO. #####

TITLE: CONCRETE BARRIER (TYPE P-4, TL-4) WITH INTEGRAL END POST (WITH CONC. WEARING COURSE)

DES: BAW	DR: LMT	APPROVED:
CHK: BLF	CHK: BLF	

SHEET NO. 40 OF 68 SHEETS

BRIDGE NO. 27C16

Jan. 14 2016 11:13 am V:\3400_ADC\CAD\SEGMENT E4\PLAN SHEETS\STRUCTURES\27C16\CBR27C16-BRG-RAL-002.dwg By: phil.horton

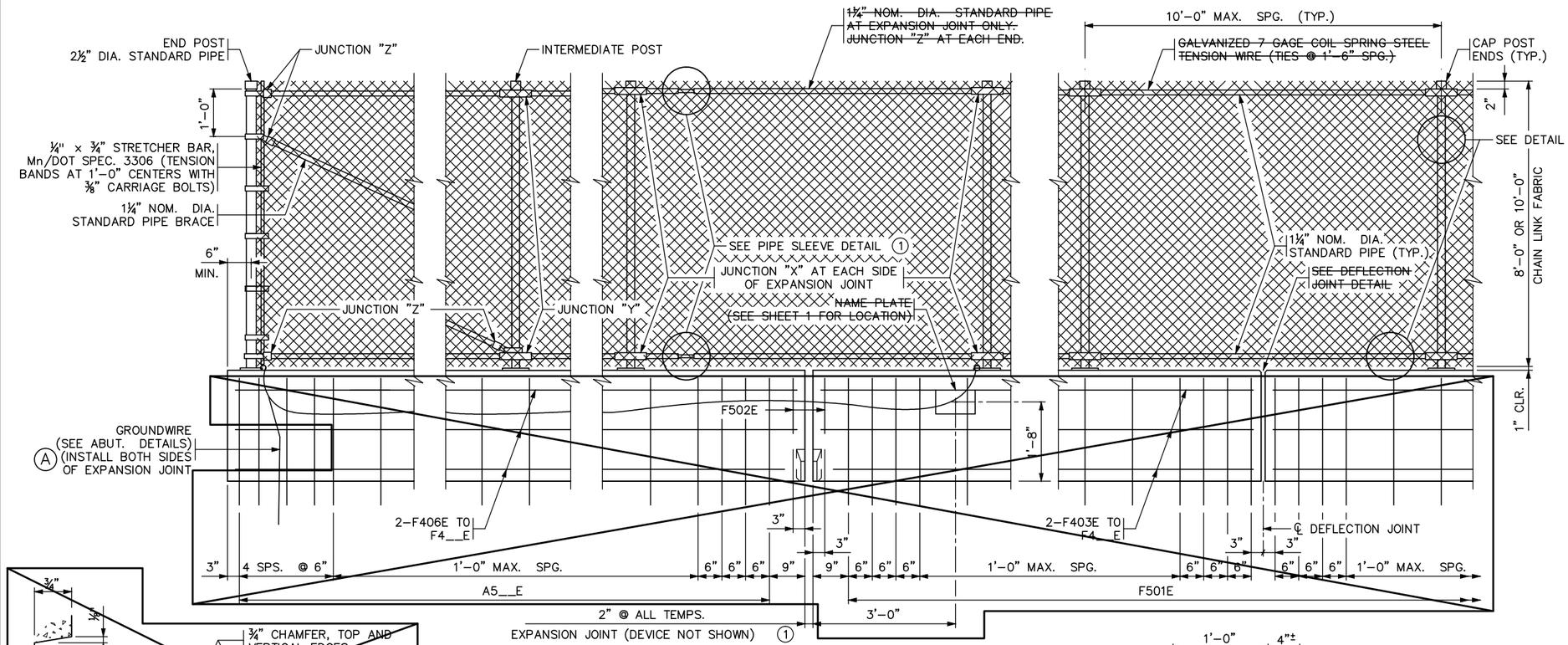

A INSIDE ELEVATION OF RAILING

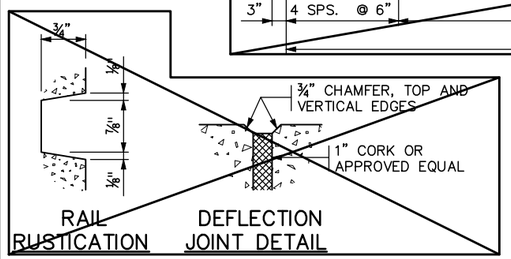

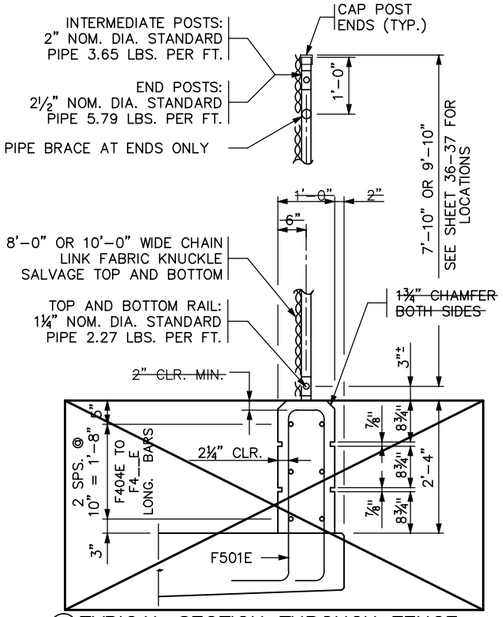

A TYPICAL SECTION THROUGH FENCE

INTERMEDIATE POST SHOWN

SHEET MODIFICATION:
A DENOTES MODIFICATION TO STANDARD SHEET

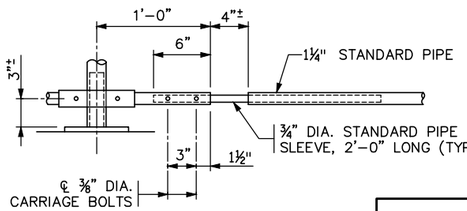

PIPE SLEEVE DETAIL (1)

GENERAL NOTES

A SEE CONCRETE CURB SHEET FOR DIMENSIONS, REINFORCEMENT AND NOTES.

~~LENGTH OF "TYPE P-1 RAILING CONCRETE (3Y46 OR 3Y46A)" FOR PAYMENT SHALL BE MEASURED BETWEEN THE OUTSIDE FACES OF THE CONCRETE RAIL.~~

A LENGTH OF "WIRE FENCE DESIGN W-1" ~~FOR PAYMENT~~ SHALL BE MEASURED BETWEEN THE CENTERS OF END RAILPOSTS. SEE SHEET 36-37. ~~CONCRETE RAILING = 350 LBS./FT. (0.086 CU. YDS./FT.)~~

FENCE POST ANCHORAGES SHALL BE TYPE A. SEE DETAIL B905 "FENCE POST ANCHORAGE".

~~MAXIMUM SPACING OF DEFLECTION JOINTS SHALL BE 20 FT. FOR SPACING OF FENCE POST, JOINTS AND ELECTRICAL GROUNDS, SEE SUPERSTRUCTURE SHEETS.~~

FENCE POSTS AND FENCE POST ANCHORAGES SHALL BE SET VERTICAL, UNLESS OTHERWISE NOTED.

℄ OF FENCE POST ANCHORAGE SHALL BE A MINIMUM OF 6" FROM JOINTS.

END POSTS AND BRACING SHALL BE AT 500 FT. MAXIMUM INTERVALS.

~~ALL POSTS SHALL HAVE A MEANS TO SECURELY HOLD THE TOP TENSION WIRE IN POSITION AND ALLOW FOR THE REMOVAL AND REPLACEMENT OF A POST WITHOUT DAMAGING THE TOP WIRE.~~

WIRE TIES MAY BE 9 GAGE GALVANIZED STEEL OR 0.179" MIN. ALUMINUM ALLOY CONFORMING TO A.S.T.M. B211, ALLOY 1100-H18. ~~USE 12½ GAGE GALVANIZED HOG RINGS FOR TENSION WIRE TIES.~~

~~ALL MATERIAL IN THE CONCRETE BASE AND END POST IS INCLUDED IN THE SUPERSTRUCTURE QUANTITIES.~~

SEE SPECIAL PROVISIONS FOR REQUIREMENTS NOT INCLUDED ON THIS SHEET. ~~AND FOR BASIS OF PAYMENT.~~

(1) PROVIDE PIPE SLEEVE IN SPAN BETWEEN THE VERTICAL POSTS AT EXPANSION JOINT. SEE SUPERSTRUCTURE SHEETS FOR LOCATION.

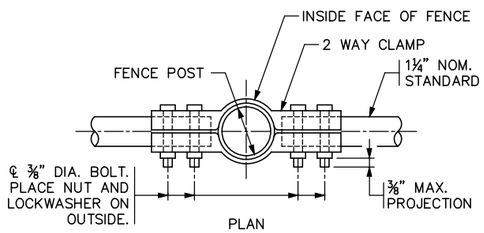

2 WAY CLAMP BENDING TABLE	
GRADE OF FENCE	Ø
0° TO 2°	0°
2° TO 6°	4°
6° TO 10°	8°

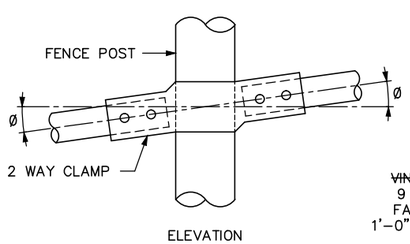

JUNCTION "X"

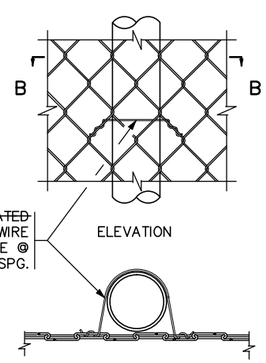

DETAIL "A"

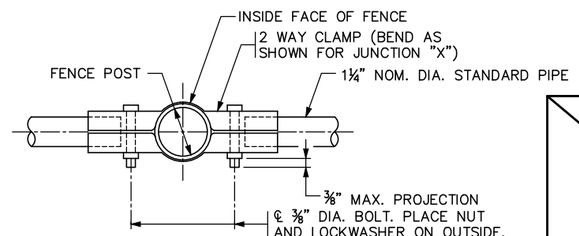

JUNCTION "Y"

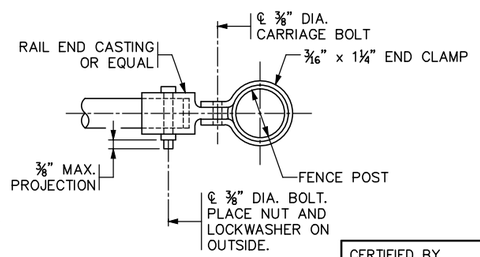

JUNCTION "Z"

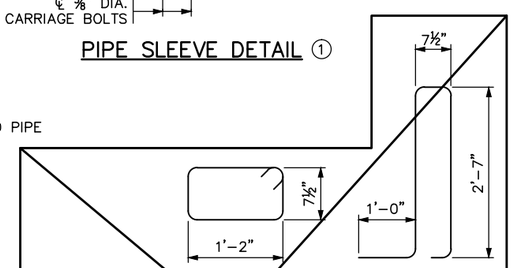

BILL OF REINFORCEMENT FOR PARAPET				
BAR	NO.	LENGTH	SHAPE	LOCATION
F501E		7'-3"		RAIL BASE VERTICAL
F502E		4'-6"		RAIL BASE VERTICAL
F403E				RAIL BASE LONGITUDINAL
F404E				RAIL BASE LONGITUDINAL

REVISED: 04-17-2013

APPROVED: DECEMBER 18, 2003

STATE BRIDGE ENGINEER

CERTIFIED BY _____ LICENSED PROFESSIONAL ENGINEER XX\XX\XX DATE

NAME: ENGINEER LIC. NO. #####

TITLE: WIRE FENCE (DESIGN W-1) A

DRAFT-WORK IN PROCESS

FIG. 5-397.119 (MOD.)

DES: BAW	DR: LMT	APPROVED:
CHK: BLF	CHK: JBW	

SHEET NO. 41 OF 68 SHEETS

BRIDGE NO. 27C16

Jan. 14 2016 11:13 am V:\3400_ADC\CAD\SEGMENT E4\PLAN SHEETS\STRUCTURES\27C16\CBR27C16-BRG-RAL-002.dwg By: phil.horton

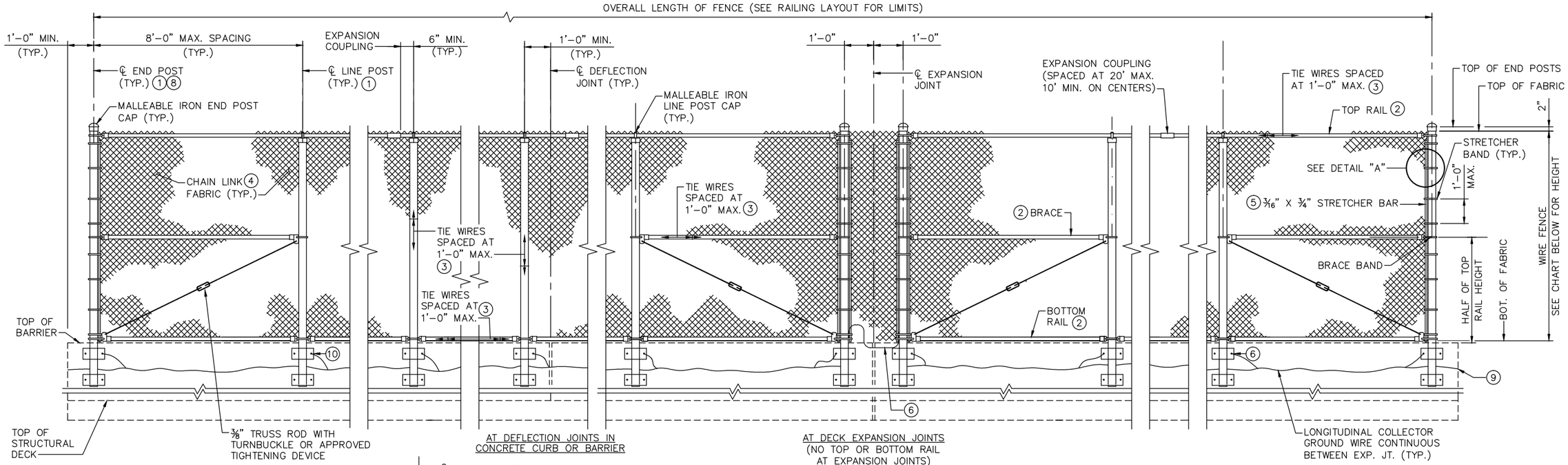

OUTSIDE ELEVATION OF WIRE FENCE

SPAN	WIRE FENCE HEIGHT
1	8'-0"

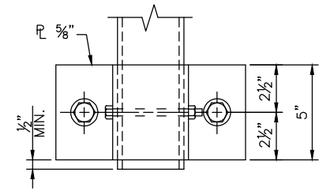

ELEVATION

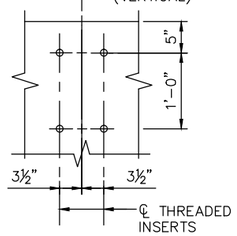

BOLT SETTING DETAIL

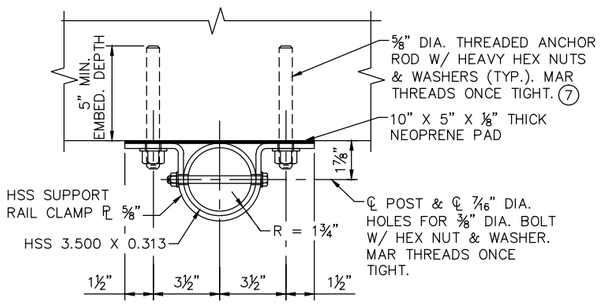

HSS CLAMP CONNECTION DETAIL

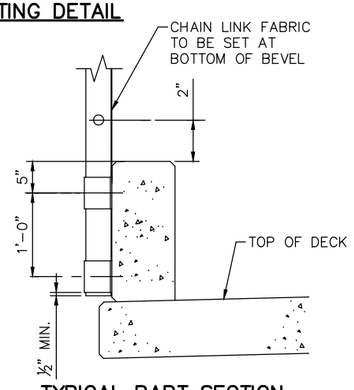

TYPICAL PART SECTION

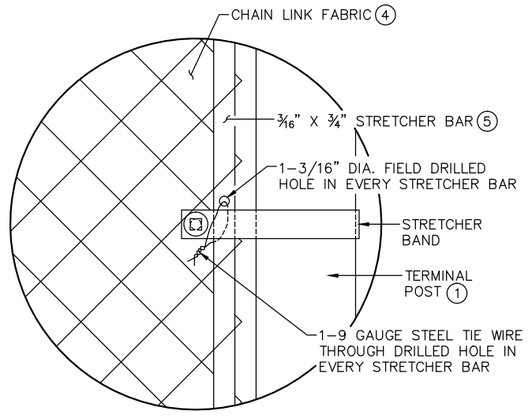

DETAIL "A"

NOTES:

1. GALVANIZED HSS 3.500 X 0.313 PER MNDOT SPEC. 3306.
2. GALVANIZED HSS 1.660 X 0.140 PER MNDOT SPEC. 3306.
3. 9 GAUGE GALVANIZED STEEL TIE WIRES ATTACH CHAIN LINK FABRIC TO HSS.
4. 9 GAUGE GALVANIZED STEEL CHAIN LINK FABRIC, 2" MESH, KNUCKLE SELVAGE TOP AND BOTTOM.
5. CONTRACTOR MUST FIELD DRILL ONE 3/16" DIA. HOLE IN EVERY STRETCHER BAR AND USE A 9 GALVANIZED GAUGE STEEL TIE WIRE TO TIE ON STRETCHER BAND AND CHAIN LINK FABRIC TOGETHER. LOCATE DRILLED HOLE FOR TIE WIRE AT APPROXIMATE MID-HEIGHT OF FENCE.
6. AT ALL SLAB EXPANSION JOINTS, BOND THE POSTS TOGETHER. ATTACH 6 AWG COPPER STRANDED WIRE TO STEEL POSTS WITH UL LISTED HARDWARE AS SHOWN WITH 6" EXCESS OF WIRE TO ALLOW FOR EXPANSION.
7. 5/8" DIA THREADED ANCHOR RODS MUST BE ASTM-A36. EMBED THREADED RODS INTO PARAPET WALL WITH AN APPROVED EPOXY ANCHORAGE SYSTEM. MINIMUM EMBEDMENT DEPTH IS 5". ANCHORAGE SYSTEM CHOSEN MUST BE ABLE TO ACHIEVE AN ULTIMATE TENSILE RESISTANCE OF 3.5 KIPS PER BOLT. THE CONTRACTOR MUST PROVIDE EVIDENCE THAT THIS CAN BE ACHIEVED. EVIDENCE OF ADEQUATE TENSILE RESISTANCE CAN BE BASED ON THE MANUFACTURER'S PUBLISHED VALUES OF ULTIMATE TENSILE STRENGTH (ANCHOR SPACING AND EDGE DISTANCE MUST BE ACCOUNTED FOR). ANCHOR INSTALLATION, INCLUDING HOLE SIZE, DRILLING, AND CLEAN-OUT, MUST BE IN ACCORDANCE WITH THE MANUFACTURER'S INSTRUCTIONS.
8. END POSTS AND BRACING SHALL BE AT 500 FT. MAXIMUM INTERVALS
9. CONTINUE GROUND WIRE TO WIRE FENCE (DESIGN W-1) CONECTION.
10. GROUND WIRE PIGTAIL PLACED WITHIN 6" OF EACH FENCE POST ANCHORAGE. CONTRACTOR SHALL COORDINATE LOCATIONS WITH FENCE SUB CONTRACTOR.
11. GROUND WIRE PIGTAIL CONNECTION TO ABUTMENT EXPANSION JOINT DEVICE AND ABUTMENT EXPANSION JOINT COVER PLATES (NOT SHOWN).

NO.	DATE	BY	CHECK	DESIGN	REVISION / SUBMITTAL

DESIGNED BY: HLR | CHECKED BY: EJT
DRAWN BY: RHK | CHECKED BY: JBW

AECOM Kimley»Horn

90% SUBMISSION - 01/22/16

METROPOLITAN COUNCIL

SOUTHWEST Green Line LRT Extension

CIVIL - VOLUME 4G
CSAH 40 (GLENWOOD AVENUE) - WEST
BRIDGE 27C16
WIRE FENCE SPECIAL DESIGN

DISCIPLINE: STRUCTURES
SHEET NAME: CBR27C16-BRG-RAL-003

SHEET 42 OF 68

Jan, 14 2016 11:13 am V:\3400_ADC\CAD\SEGMENT E4\PLAN SHEETS\STRUCTURES\27C16\CBR27C16-BRG-RAL-003.dwg By: phil.horton

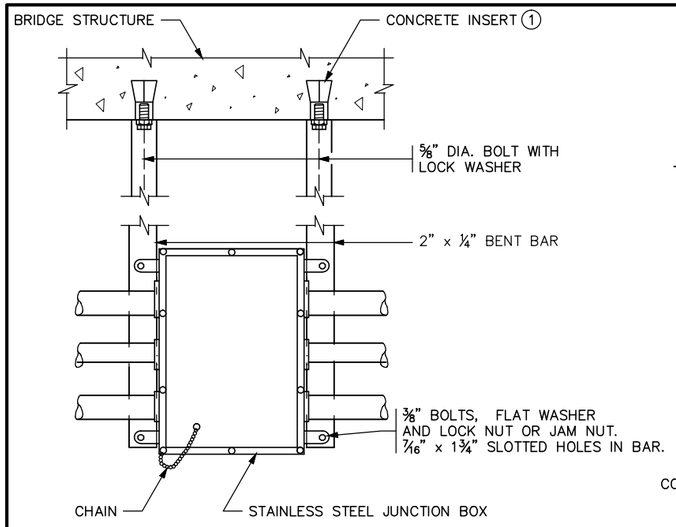

JUNCTION BOX DETAILS

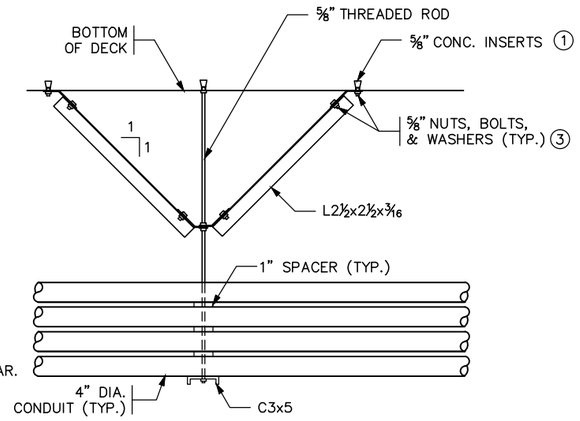

CENTERING DEVICE DETAIL – SIDE VIEW

(LOCATED ONLY ON A HANGER ADJACENT TO PIER)

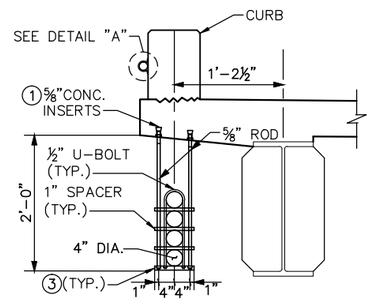

OVERHANG CONDUIT DETAIL

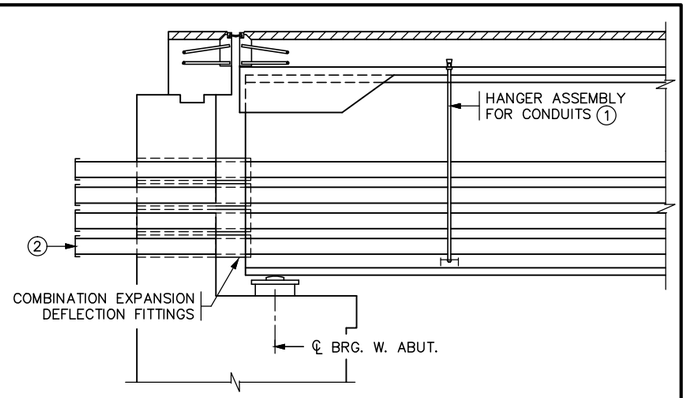

LONGITUDINAL SECTION

(FOR SYSTEMWIDE ELECTRICAL CONDUIT SYSTEM)

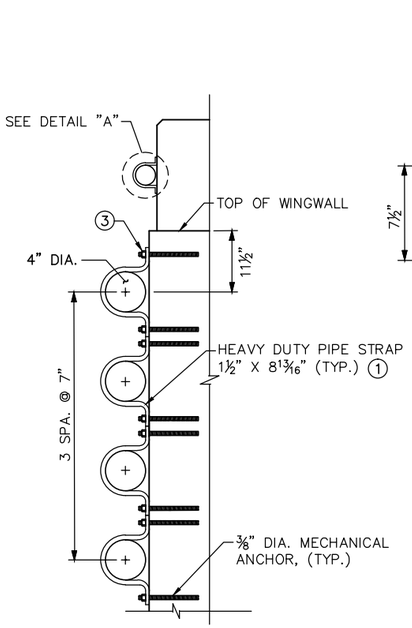

DETAIL "B"

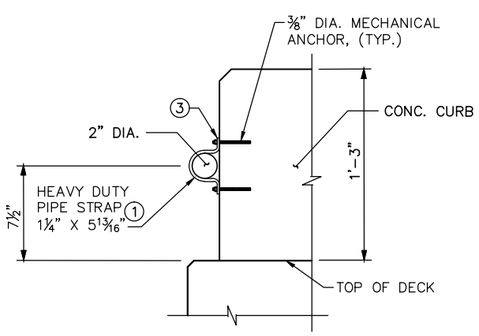

DETAIL "A"

GENERAL PLAN

GENERAL NOTES

RODS, EYE BOLTS AND PIPE CLAMPS SHALL COMPLY WITH MnDOT SPEC. 3313, TYPE I.

TURNBUCKLES AND EYE BOLTS SHALL COMPLY WITH A.S.T.M. A235 CLASS A MINIMUM REQUIREMENTS.

FLAT BARS AND ANCHORAGES SHALL COMPLY WITH SPEC. 3306.

CONCRETE INSERTS SHALL BE APPROVED TYPE MALLEABLE IRON. MATERIAL AS PER SPEC. 3324, GRADE 35018. TAP AFTER GALVANIZING.

GALVANIZE BOLTS, NUTS, WASHERS, TURNBUCKLES, RODS, EYE BOLTS, AND INSERTS AS PER SPEC. 3392. GALVANIZE OTHER MATERIAL AS PER SPEC. 3394 AFTER FABRICATION.

PIPE SLEEVES SHALL COMPLY WITH SPEC. 3362.

PAINT ALL CONDUITS AND SUPPORTS TO MATCH ADJACENT BRIDGE SURFACES.

CONDUIT SHALL BE PVC COATED R.S.C. UNLESS OTHERWISE NOTED

(1) SPACE PIPE STRAPS OR INSERTS AT 10'–0" MAXIMUM CENTERS.

(2) SEE SYSTEM WIDE ELECTRICAL PLANS.

(3) DOUBLE NUTS OR JAM NUTS OR LOCK NUT.

DRAFT-WORK IN PROCESS

NO.	DATE	BY	CHECK	DESIGN	REVISION / SUBMITTAL

DESIGNED BY: EJT | CHECKED BY: JBW
DRAWN BY: NAO | CHECKED BY: JBW

AECOM Kimley»Horn

90% SUBMISSION - 01/22/16

METROPOLITAN COUNCIL

SOUTHWEST Green Line LRT Extension

CIVIL - VOLUME 4G
CSAH 40 - (GLENWOOD AVENUE) - WEST
BRIDGE 27C16
CONDUIT SYSTEM FOR ELECTRICAL

DISCIPLINE: STRUCTURES

SHEET NAME: CBR27C16-BRG-SYS-001

SHEET 43 OF 68

Jan 14, 2016 - 8:11:13 am - K:\3490\od\CAD\SHEETS\STRUCTURES\CBR27C16\CBR27C16-BRG-SYS-001.dwg - By: philharrington

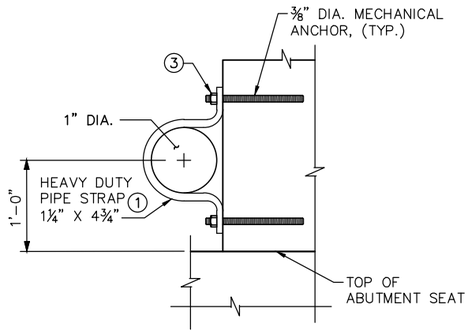

DETAIL "A"

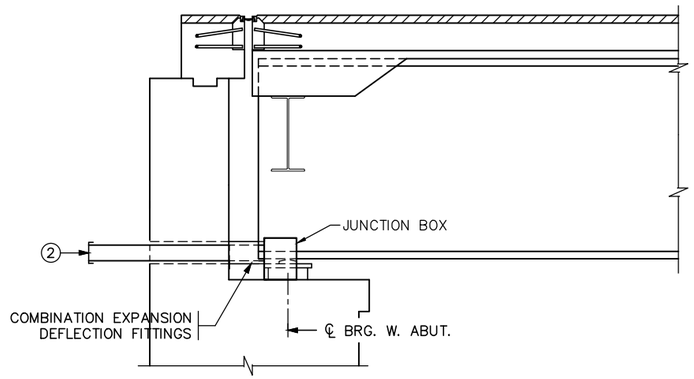

LONGITUDINAL SECTION

(FOR LIGHTING CONDUIT SYSTEM)

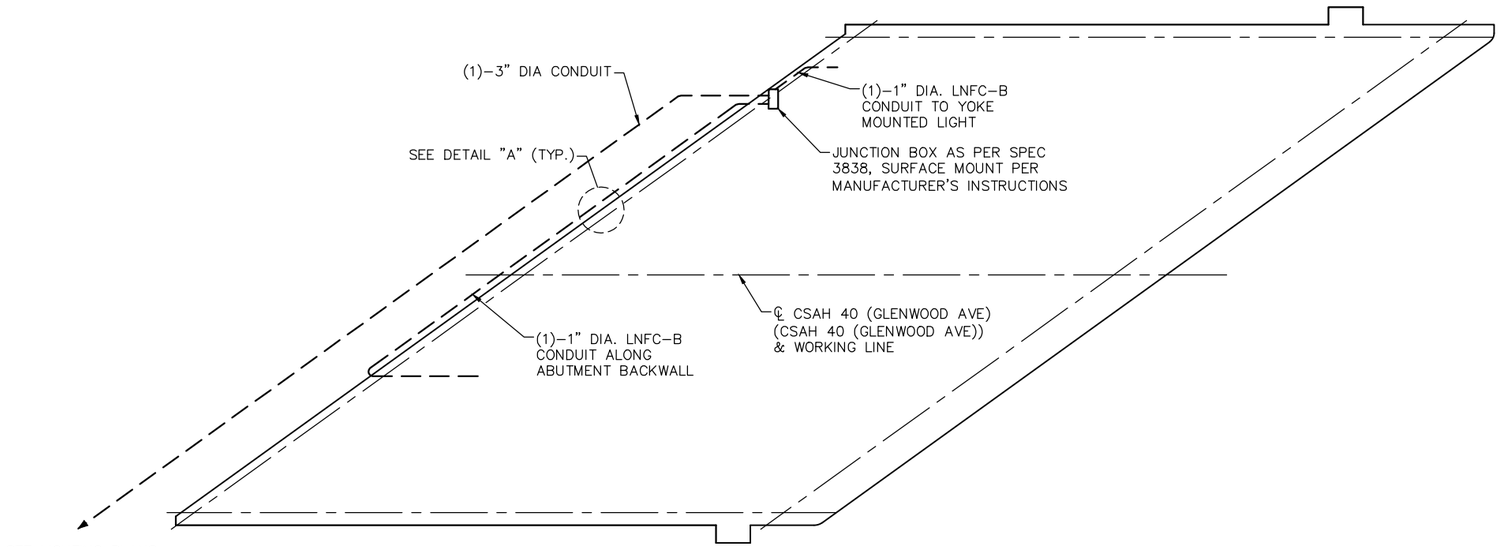

GENERAL PLAN

GENERAL NOTES

FLAT BARS AND ANCHORAGES SHALL COMPLY WITH SPEC. 3306.

PAINT ALL CONDUITS AND SUPPORTS TO MATCH ADJACENT BRIDGE SURFACES

PIPE SLEEVES SHALL COMPLY WITH SPEC. 3362.

CONDUIT SHALL BE PVC COATED R.S.C. UNLESS OTHERWISE NOTED

1. SPACE PIPE STRAPS OR INSERTS AT 10'–0" MAXIMUM CENTERS.
2. SEE LIGHTING PLANS.
3. DOUBLE NUTS OR JAM NUTS OR LOCK NUT.

DRAFT-WORK IN PROCESS

NO.	DATE	BY	CHECK	DESIGN	REVISION / SUBMITTAL

DESIGNED BY: EJT | CHECKED BY: JBW
DRAWN BY: NAO | CHECKED BY: JBW

AECOM Kimley»Horn

90% SUBMISSION - 01/22/16

METROPOLITAN COUNCIL

SOUTHWEST Green Line LRT Extension

CIVIL - VOLUME 4G
CSAH 40 (GLENWOOD AVENUE) - WEST
BRIDGE 27C16
CONDUIT SYSTEM FOR LIGHTING

DISCIPLINE: STRUCTURES
SHEET NAME: CBR27C16-BRG-SYS-002

SHEET 44 OF 68

Jan 14, 2016 - 11:11:14am

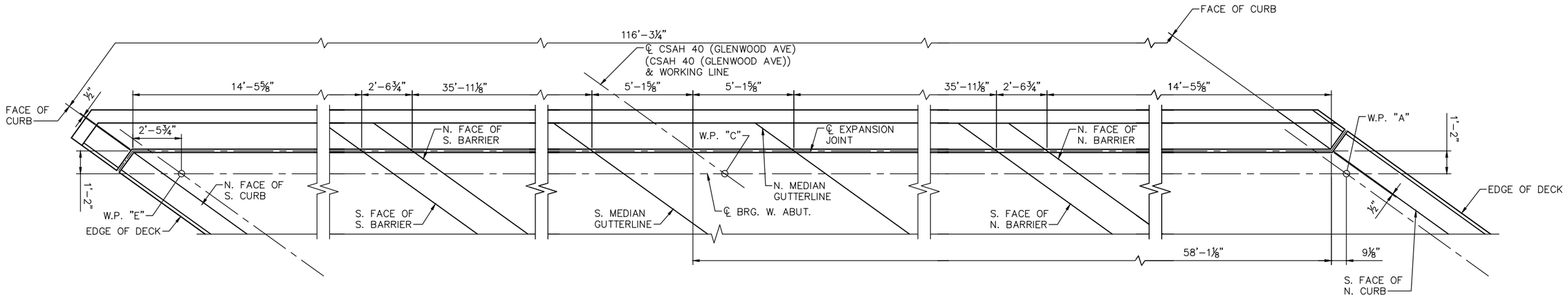

PLAN
EXPANSION JOINT AT WEST ABUTMENT

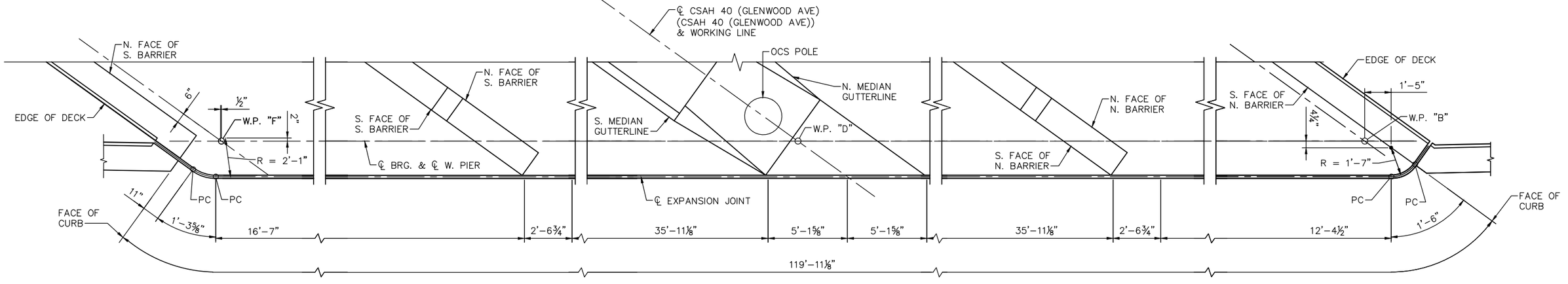

PLAN
EXPANSION JOINT AT WEST PIER

NOTES:

ALL DIMENSIONS MEASURED ALONG ℄ OF EXPANSION JOINT.

NO.	DATE	BY	CHECK	DESIGN	REVISION / SUBMITTAL

DESIGNED BY: HLR | CHECKED BY: EJT
DRAWN BY: NAO | CHECKED BY: JBW

90% SUBMISSION - 01/22/16

AECOM Kimley»Horn

METROPOLITAN COUNCIL

SOUTHWEST Green Line LRT Extension

CIVIL - VOLUME 4G
CSAH 40 (GLENWOOD AVENUE) - WEST
BRIDGE 27C16
WATERPROOF EXPANSION DEVICE 1

DISCIPLINE: STRUCTURES
SHEET NAME: CBR27C16-BRG-EXP-001

SHEET 45 OF 68

Jan, 14 2016 11:14 am V:\3400_ADC\CAD\SEGMENT E4\PLAN SHEETS\STRUCTURES\27C16\CBR27C16-BRG-EXP-001.dwg By: phil.horton

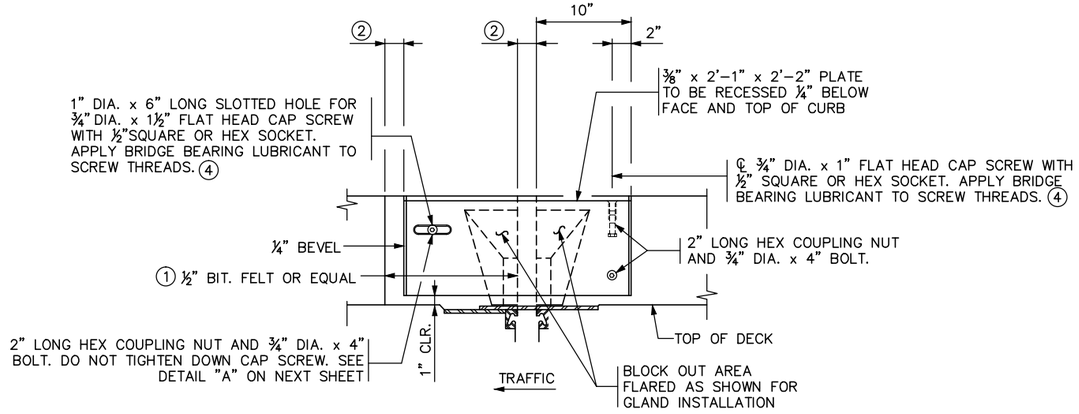

INSIDE ELEVATION OF CONCRETE CURB

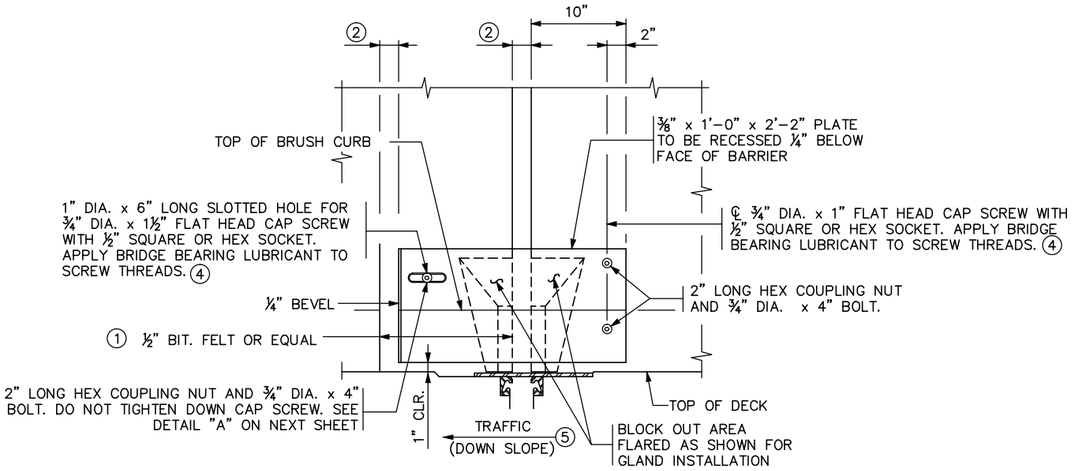

(A) OUTSIDE ELEVATION OF P2 BARRIER

(BACK OF TYPE P2 BARRIER, VEHICLE FACE PLATE SIM., ELEV @ SDWK. SHOWN)

NOTE:
TRANSVERSE DECK REINFORCEMENT MAY BE SHIFTED THE MINIMUM DISTANCE REQUIRED FOR EXPANSION DEVICE PLACEMENT

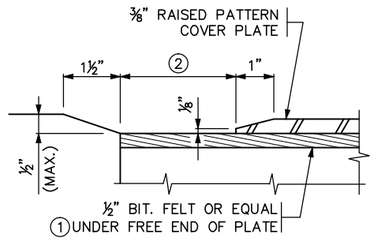

DETAIL "A"

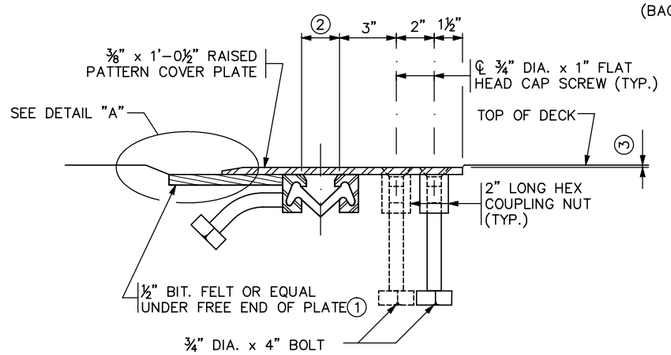

SECTION D–D

GENERAL NOTES

(A) COVER PLATES AT WEST PIER SHALL BE FIBERGLASS.

(A) SEE NEXT SHEET FOR ADDITIONAL DETAILS AND NOTES.

3/4" DIA. X 1" FLAT HEAD CAP SCREW WITH 1/2" SQUARE OR HEX SOCKET PER SPEC 3391. CAP SCREWS SHALL BE COUNTERSUNK 1/16" BELOW TOP OF PLATE. APPLY BRIDGE BEARING LUBRICANT TO SCREW THREADS. (4)

(1) USE LARGEST SINGLE PIECE POSSIBLE. USE OF SMALL PIECES OR SCRAPS SECURED TOGETHER IS PROHIBITED.

(A) (2) 2" @ 90° F, 2" @ 45° F @ WEST ABUTMENT.
2" @ 90° F, 2 3/16" @ 45° F @ WEST PIER.

(3) 1/8" (1/4" MAX.).

(4) LUBRICANT PER MnDOT APPROVED/QUALIFIED PRODUCTS LIST: BRIDGE – BRIDGE BEARING LUBRICANT.

(A) (5) DOWN SLOPE DIRECTION APPLIES TO 3/8" x 1'-0 1/2" RAISED COVER PLATE

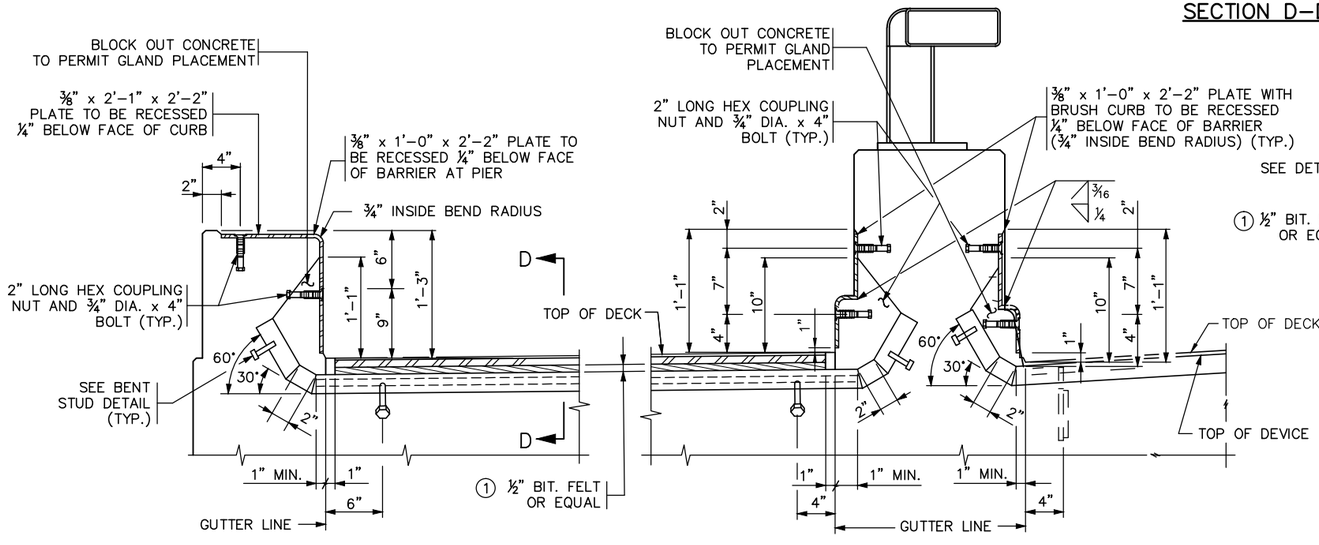

CONCRETE CURB

(TYPE P–4 BARRIER SIMILAR)

(A) TYPE P2 BARRIER

SECTION THROUGH BARRIER AND CURB – INTEGRAL SIDEWALK

(BENT STUD MAY BE USED ON WEST ABUTMENT EXPANSION JOINT IN SIDEWALK AREA.)
(ALL OTHER LOCATIONS SHALL BE BAR–RODS.)

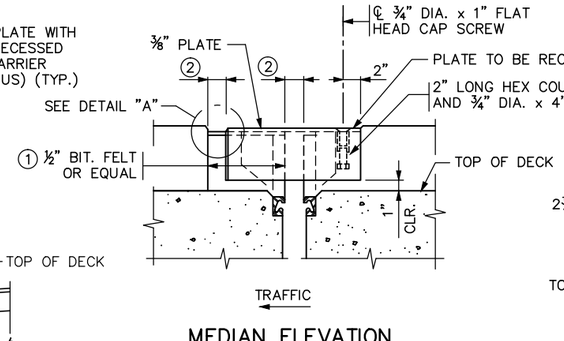

MEDIAN ELEVATION

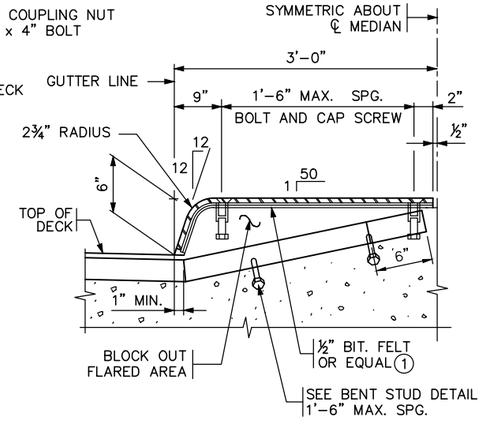

(A) MEDIAN SECTION

SHEET MODIFICATION:
(A) DENOTES MODIFICATION TO STANDARD SHEET

REVISION:

APPROVED: NOVEMBER 6, 2013
Nancy Daubenberger
STATE BRIDGE ENGINEER

DRAFT-WORK IN PROCESS

CERTIFIED BY _____ 12/14/15
LICENSED PROFESSIONAL ENGINEER — DATE
NAME: **ENGINEER** LIC. NO. #####

TITLE: WATERPROOF EXPANSION DEVICE (RAISED MEDIAN OR INTEGRAL SIDEWALK WITH CURB)

DES: HLR	DR: NAO	APPROVED:
CHK: EJT	CHK: JBW	

SHEET NO. **46** OF **68** SHEETS

FIG. 5–397.632 (MOD.)

BRIDGE NO. **27C16**

Jan. 14 2016 11:14 am V:\3400_ADC\CAD\SEGMENT E4\PLAN SHEETS\STRUCTURES\27C16\CBR27C16-BRG-EXP-002.dwg By: phil.horton

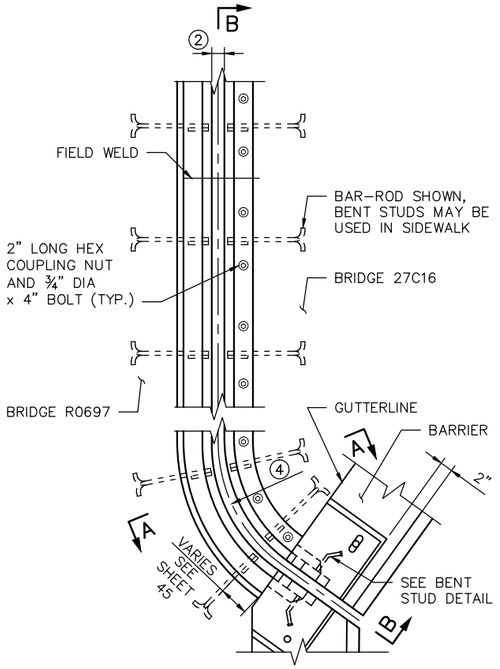

PLAN VIEW @ EXPANSION DEVICE

(WEST PIER, NORTH CORNER SHOWN, SOUTH CORNER SIMILAR)

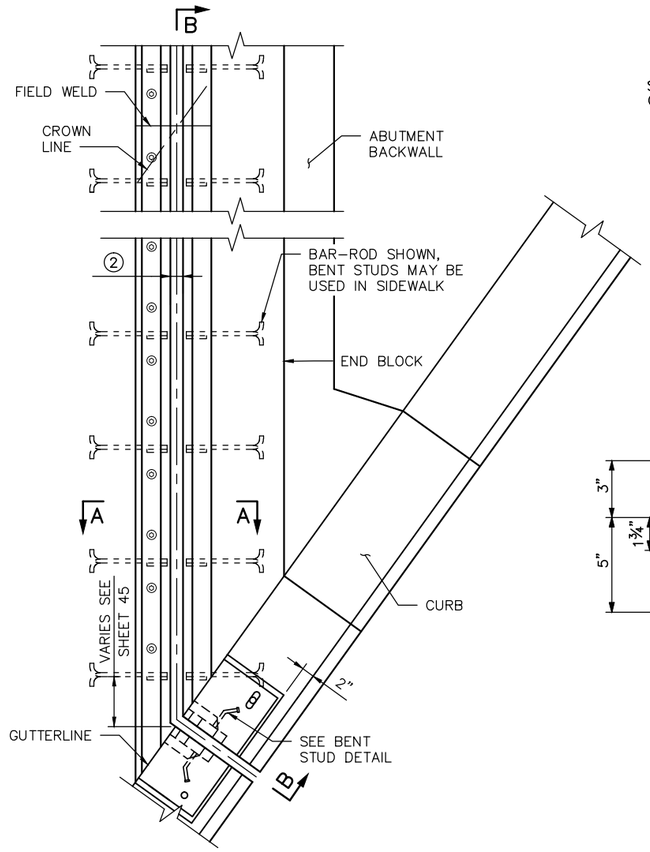

PLAN VIEW @ EXPANSION DEVICE

(WEST ABUTMENT, NORTH CORNER SHOWN, SOUTH CORNER SIMILAR)

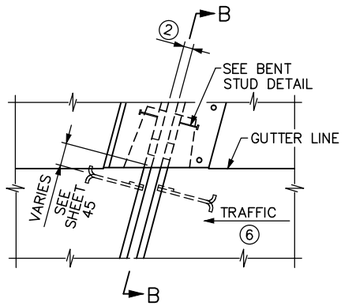

PLAN VIEW @ EXPANSION DEVICE

MEDIAN OR SIDEWALK ALTERNATE

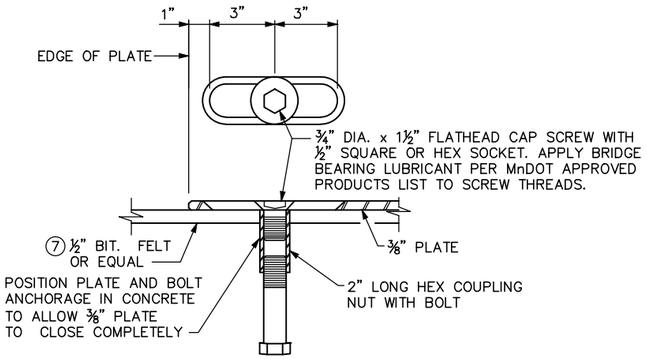

DETAIL "A"

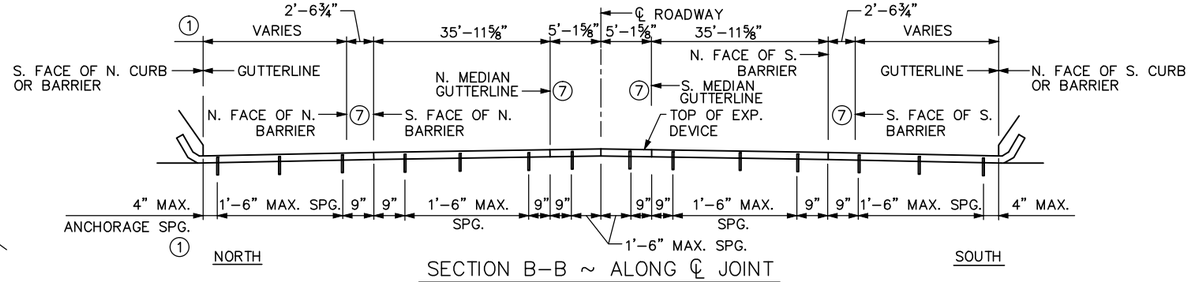

SECTION B–B ~ ALONG ℄ JOINT

⑧ ELEVATIONS SHOWN AT ROADWAY ARE ⅛" BELOW TOP OF SLAB @ ℄ JOINT
ELEVATIONS SHOWN AT SIDEWALKS ARE ½" BELOW TOP OF SLAB @ ℄ JOINT

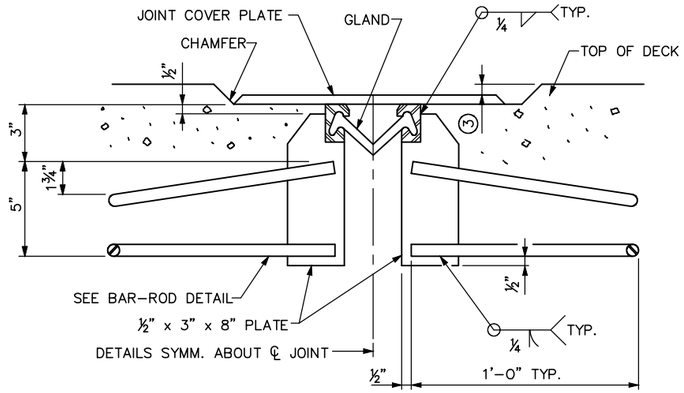

SECTION A–A

(SECTION @ SIDEWALK SHOWN W/COVER PLATE. OMIT COVER PLATE IN ROADWAY)

⑧ ELEVATIONS		
LOCATION	WEST ABUT.	WEST PIER
SOUTH FACE OF NORTH CURB	850.37	851.39
NORTH FACE OF NORTH BARRIER	849.82	851.32
SOUTH FACE OF NORTH BARRIER	849.72	851.32
NORTH MEDIAN GUTTERLINE	848.41	851.13
CL ROADWAY	848.23	851.10
SOUTH MEDIAN GUTTERLINE	848.37	851.08
NORTH FACE OF SOUTH BARRIER	847.16	850.88
SOUTH FACE OFSOUTH BARRIER	846.85	850.83
NORTH FACE OF SOUTH CURB	846.36	850.76

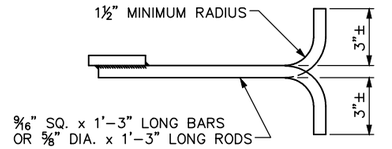

BAR–ROD DETAIL ⑤

(SEE SECTION D–D ON PREVIOUS SHEET FOR COVER PLATE SCREW DETAIL)

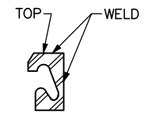

SECTION C–C

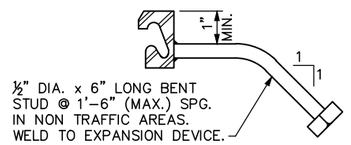

BENT STUD DETAIL

NOTES:

GALVANIZE STRUCTURAL STEEL AFTER FABRICATION AS PER MnDOT SPEC. 3394. GALVANIZE FASTENERS AS PER MnDOT SPEC. 3392.

JOINTS IN EXTRUSION SHALL BE LOCATED AT BREAKS IN TRANSVERSE PROFILE AND AS OTHERWISE REQUIRED. JOINTS SHALL BE CLOSE FIT AND WELDED. REPAIR AFTER WELDING AS PER MnDOT SPEC. 2471.3.L.

STRUCTURAL STEEL SHALL COMPLY WITH MnDOT SPEC. 3306 OR MnDOT SPEC. 3309.

EXPANSION DEVICE SHALL BE STRAIGHTENED TO A TOLERANCE OF ⅛" IN 10 FT.

¾" DIA. X 1½" FLATHEAD CAP SCREW WITH ½" SQUARE OR HEX SOCKET PER MnDOT SPEC 3391. CAP SCREWS SHALL BE COUNTERSUNK 1/16" BELOW TOP OF PLATE. APPLY BRIDGE BEARING LUBRICANT PER MnDOT APPROVED PRODUCTS LIST TO SCREW THREADS.

① DIMENSIONS ARE ALONG CENTERLINE OF JOINT. SEE SHEET 41 FOR ADDITIONAL DIMENSIONS.

② 2" @ 90° F, 2" @ 45° @ WEST ABUTMENT. 2" @ 90° F, 2 3/16" @ 45° F @ WEST PIER.

③ ⅛" (¼" MAX.).

④ SEE SHEET 43 FOR RADIUS.

⑤ PLACE BAR–ROD NORMAL TO JOINT.

⑥ SEE SHEET 1 FOR DIRECTION OF TRAFFIC.

⑦ WEST ABUTMENT EXTRUSION NON–CONTINUOUS AND ANGLED UP. SEE DETAILS ON PREVIOUS SHEET.

NO.	DATE	BY	CHECK	DESIGN	REVISION / SUBMITTAL

DESIGNED BY: HLR CHECKED BY: EJT
DRAWN BY: NAO CHECKED BY: JBW

AECOM Kimley»Horn

90% SUBMISSION - 01/22/16

METROPOLITAN COUNCIL

SOUTHWEST Green Line LRT Extension

CIVIL - VOLUME 4G
CSAH 40 (GLENWOOD AVENUE) - WEST
BRIDGE 27C16
WATERPROOF EXPANSION DEVICE 3

DISCIPLINE: STRUCTURES
SHEET NAME: CBR27C16-BRG-EXP-002-2

SHEET 47 OF 68

Jan, 14 2016 11:14 am V:\3400_ADC\CAD\SEGMENT E4\PLAN SHEETS\STRUCTURES\27C16\CBR27C16-BRG-EXP-002.dwg By: phil.horton

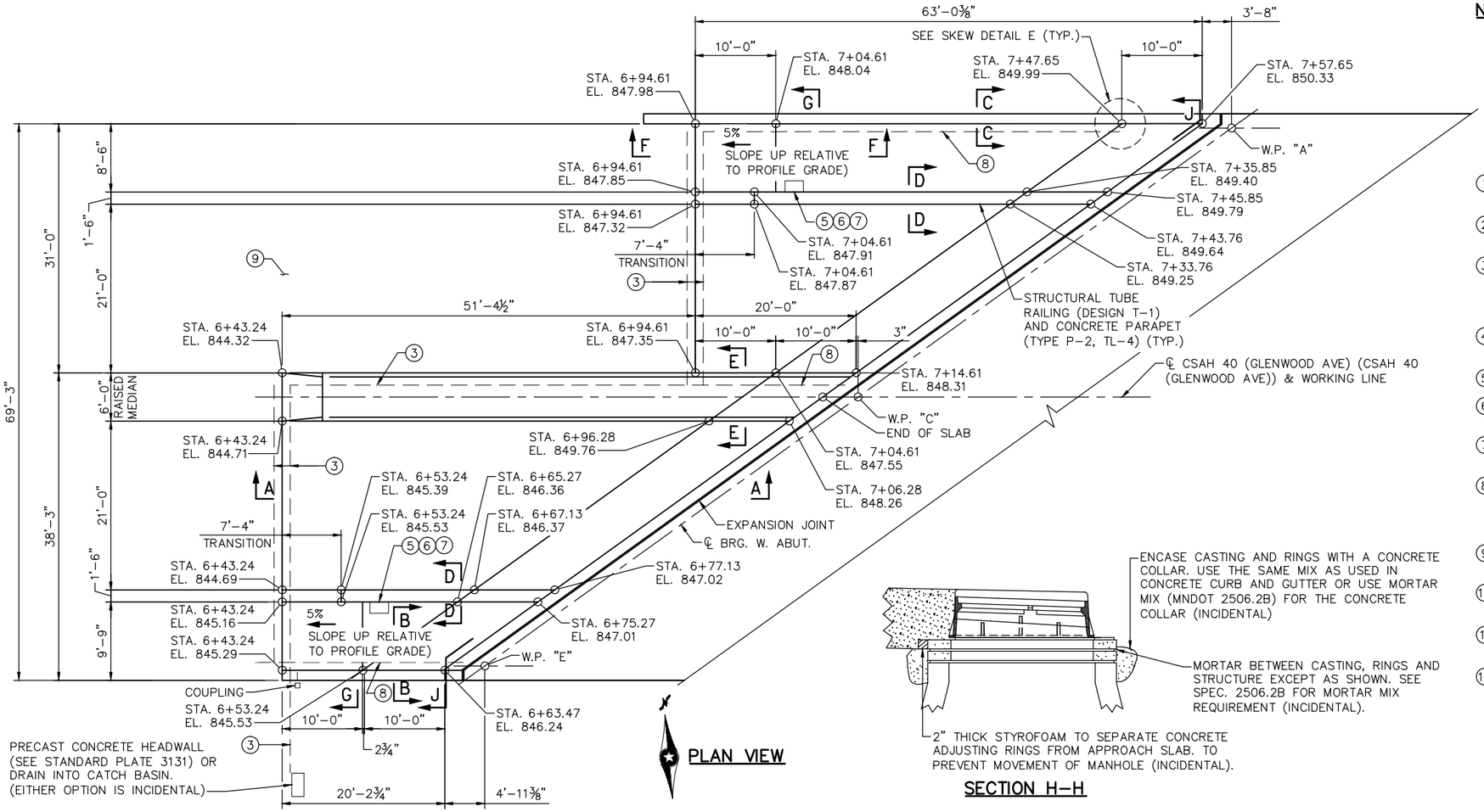

PLAN VIEW

SECTION H-H

NOTES:

CONCRETE MIX SHALL BE 3S52 FOR APPROACH PANEL.

REFER TO MNDOT SPEC. 2406 FOR ADDITIONAL INFORMATION

SEE SHEET 49,51 FOR SECTION A-A.

SEE SHEET 49 FOR SECTION F-F.

SEE SHEET 50 FOR SECTIONS G-G AND J-J.

(1) HOT POUR SEALANT, BACKER ROD, POLYSTYRENE SHALL BE LOCATED BETWEEN WALLS AND APPROACH PANELS.

(2) HOT POUR SEALANT SPEC. 3725. TOP OF SEALER FLUSH TO ⅛" BELOW TOP OF PAVEMENT SURFACE.

(3) 4-INCH NOMINAL DIAMETER THERMOPLASTIC PIPE, AS PER ASTM D1785M, SCHEDULE 40. SLOPE PIPE TO DITCH. WRAP PERFORATED PIPE WITH GEOTEXTILE AS PER SPEC. 3733. 1/8 INCH PER 12 INCH MINIMUM SLOPE. FURNISHING AND INSTALLING THE DRAIN SYSTEM IS INCIDENTAL.

(4) BACKFILL WITH FINE AGGREGATE (MNDOT 3149) MODIFIED TO 0-3% PASSING A NO. 200 SIEVE (INCIDENTAL).

(5) SEE ROADWAY PLAN FOR ADDITIONAL CATCH BASIN DETAILS.

(6) LOCATE BETWEEN GUARDRAIL POST OR AS DETERMINED BY THE DESIGNER.

(7) REFER TO THE DRAINAGE PLAN TO DETERMINE WHETHER A FLUME OR A CATCH BASIN REQUIRED.

(8) 2-INCH NOMINAL DIAMETER THERMOPLASTIC PIPE, AS PER ASTM D1785M, SCHEDULE 40. SLOPE PIPE TO DITCH. WRAP PERFORATED PIPE WITH GEOTEXTILE AS PER SPEC. 3733. 1/8 INCH PER 12 INCH MINIMUM SLOPE. FURNISHING AND INSTALLING THE DRAIN SYSTEM IS INCIDENTAL.

(9) SEE GRADING PLANS FOR PAVEMENT AND SHOULDER WIDTHS AND CONFIGURATION.

(10) THE JOINT SHALL BE PERPENDICULAR TO THE EDGE OF APPROACH PANEL FOR 1 FT. (TYP.).

(11) WHEN SKEW IS OVER 45°, THE JOINT SHALL BE PERPENDICULAR TO GUTTER FOR 1' (TYP.).

(12) SEE SHEET 50 FOR SEALANT.

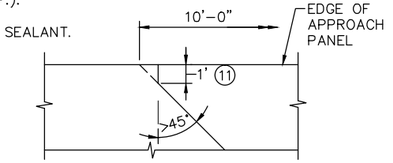

SKEW DETAIL "E"
(PLAN VIEW)

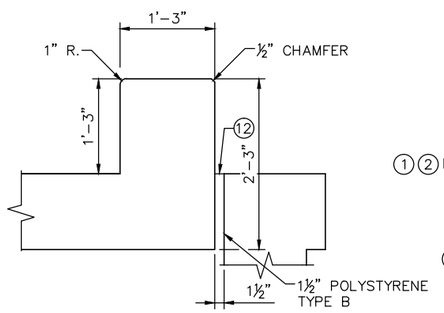

SECTION B-B

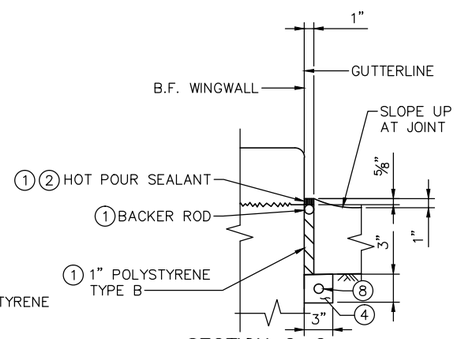

SECTION C-C

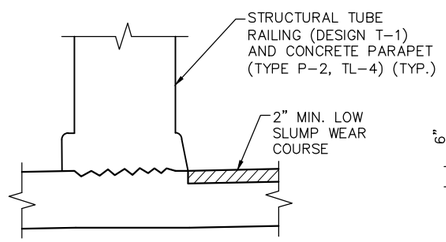

SECTION D-D

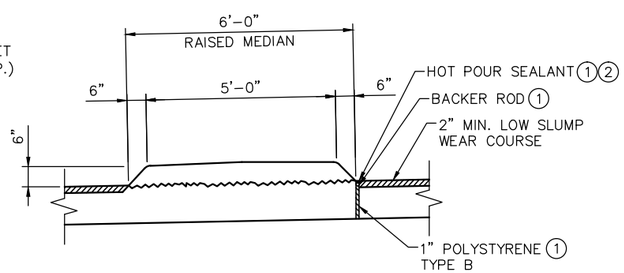

SECTION E-E

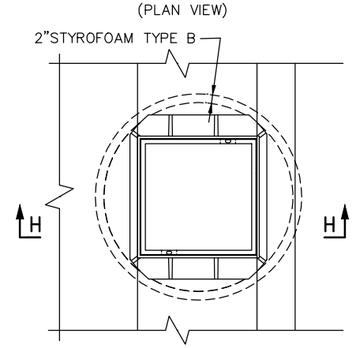

PLAN VIEW OF C.B. CASTING
(GRATE NOT SHOWN)

NO.	DATE	BY	CHECK	DESIGN	REVISION / SUBMITTAL

DESIGNED BY: KAE | CHECKED BY: JBW
DRAWN BY: NAO | CHECKED BY: JBW

AECOM Kimley»Horn

90% SUBMISSION - 01/22/16

METROPOLITAN COUNCIL

SOUTHWEST

CIVIL - VOLUME 4G
CSAH 40 (GLENWOOD AVENUE) - WEST
BRIDGE 27C16
APPROACH PANEL DETAILS 1

DISCIPLINE: STRUCTURES

SHEET NAME: CBR27C16-BRG-DTL-001-1

SHEET 48 OF 68

Jan, 14 2016 11:15 am V:\3400_ADC\CAD\SEGMENT E4\PLAN SHEETS\STRUCTURES\27C16\CBR27C16-BRG-DTL-001.dwg By: phil.horton

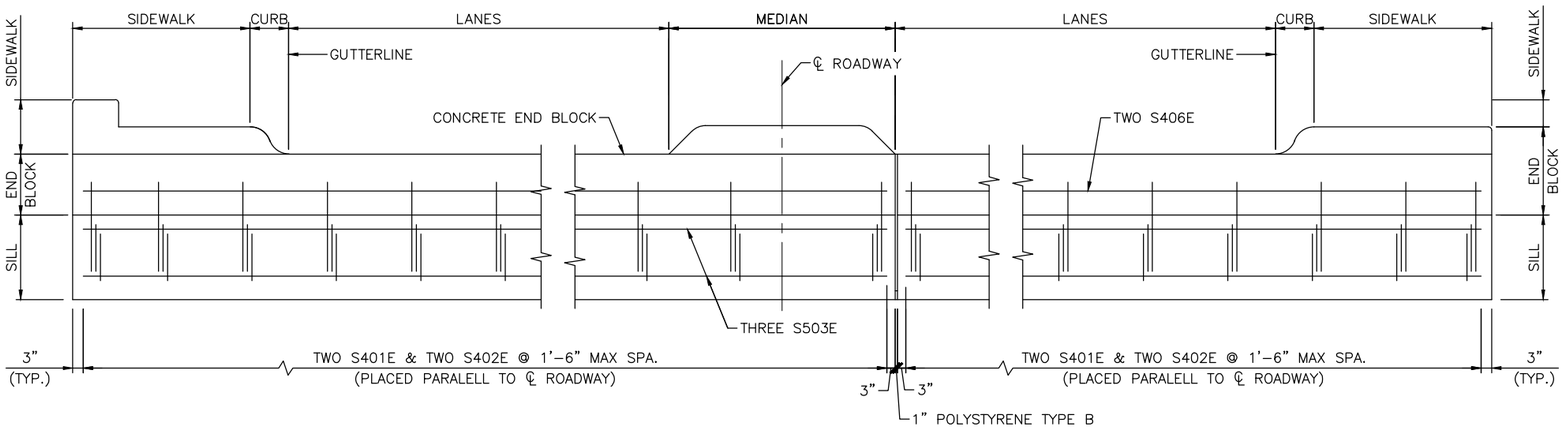

SILL ELEVATION

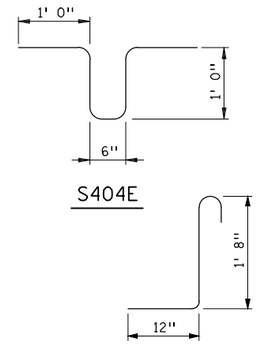

BILL OF REINFORCEMENT FOR CONCRETE SILL

CONTRACTOR IS REQUIRED TO COMPLETE THE BILL OF REINFORCEMENT TABLE AND PREPARE SHOP DRAWINGS AND SUBMIT THEM TO THE PROJECT ENGINEER AT LEAST 3 WEEKS BEFORE REBAR FABRICATION.

BAR	NO.	LENGTH	SHAPE	LOCATION
S401E	--	3'-2"		SILL VERTICAL
S402E	--	5'-6"		SILL TIE
✳ S503E	--	--'--		SILL HORIZONTAL
S404E	--	4'-6"		KEY TIE
✳ S405E	--	--' -"-		KEY HORIZONTAL
✳ S406E	--	--' -"-		END BLOCK HORIZONTAL

✳ MINIMUM REINFORCEMENT LAP LENGTHS ARE AS FOLLOWS: NO. 4 BAR = 1'-8", NO. 5 BAR = 2'-1".

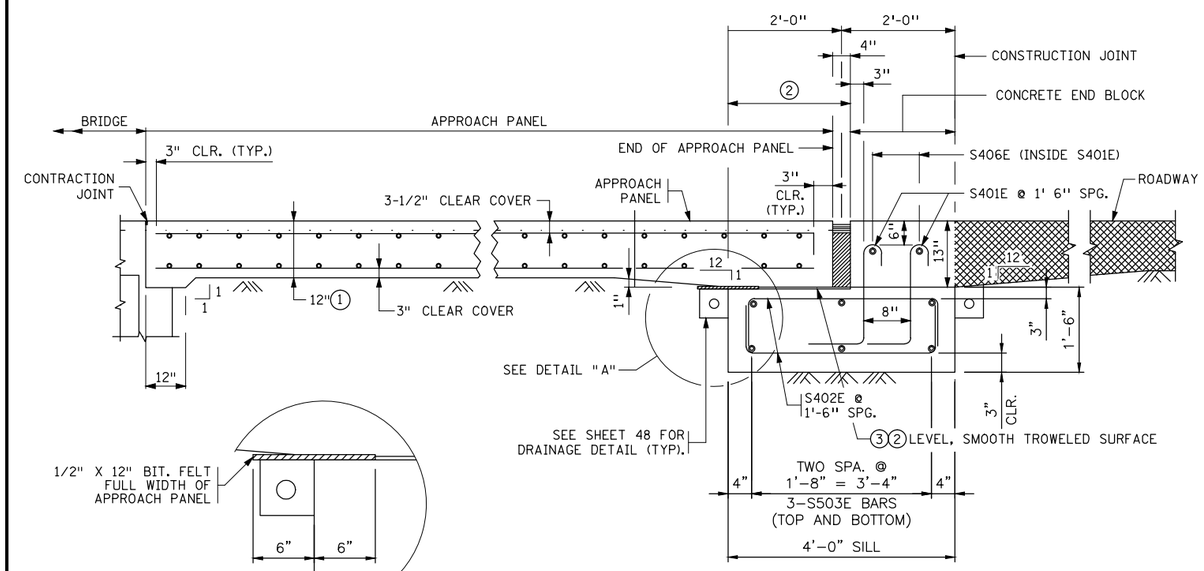

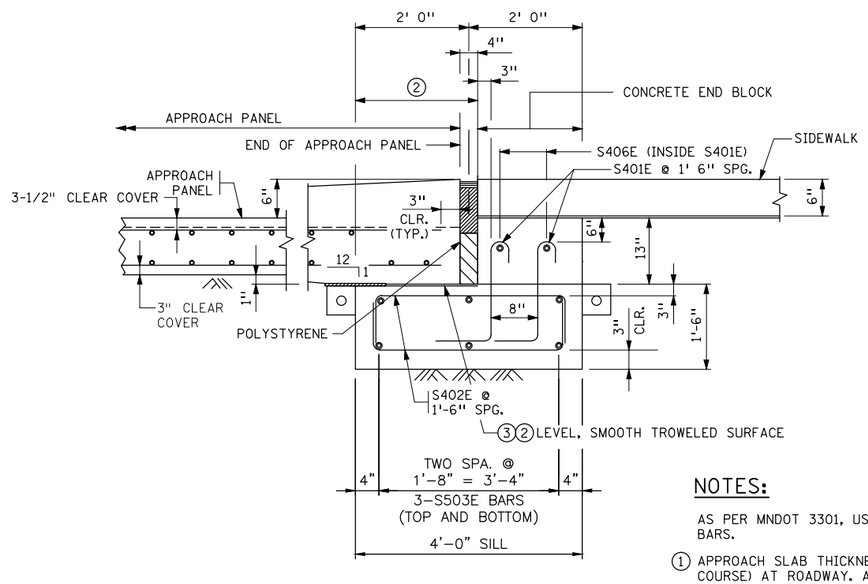

NOTES:

AS PER MNDOT 3301, USE EPOXY COATED GRADE 60 REINFORCEMENT BARS.

1. APPROACH SLAB THICKNESS IS 12" (10" SLAB + 2" WEARING COURSE) AT ROADWAY. APPROACH SLAB THICKNESS IS 12" TO 18" (12" TO 18" MONOLITHIC) AT SIDEWALK.
2. PLACE PLASTIC SHEETING (MNDOT 3756) AS APPROVED BY THE ENGINEER TO BREAK BOND. COVER AREA SHOWN IN DETAIL. (SHEETING IS INCIDENTAL).
3. REQUIRED CONSTRUCTION JOINT.
4. SEE SHEET 51 FOR TYPE OF EXPANSION JOINT. DETAILS OF EXPANSION JOINT TYPE E8H ARE SHOWN ON STANDARD PLAN 5-297.229.

NO.	DATE	BY	CHECK	DESIGN	REVISION / SUBMITTAL

DESIGNED BY: JBW | CHECKED BY: BLF
DRAWN BY: NAO | CHECKED BY: JBW

AECOM Kimley»Horn

90% SUBMISSION - 01/22/16

METROPOLITAN COUNCIL

SOUTHWEST

CIVIL - VOLUME 4G
CSAH 40 (GLENWOOD AVENUE) - WEST
BRIDGE 27C16
APPROACH PANEL DETAILS 2

DISCIPLINE: STRUCTURES
SHEET NAME: CBR27C16-BRG-DTL-001-2

SHEET 49 OF 68

Jan, 14 2016 11:15 am V:\3400_ADC\CAD\SEGMENT E4\PLAN SHEETS\STRUCTURES\27C16\CBR27C16-BRG-DTL-001.dwg By: phil.horton

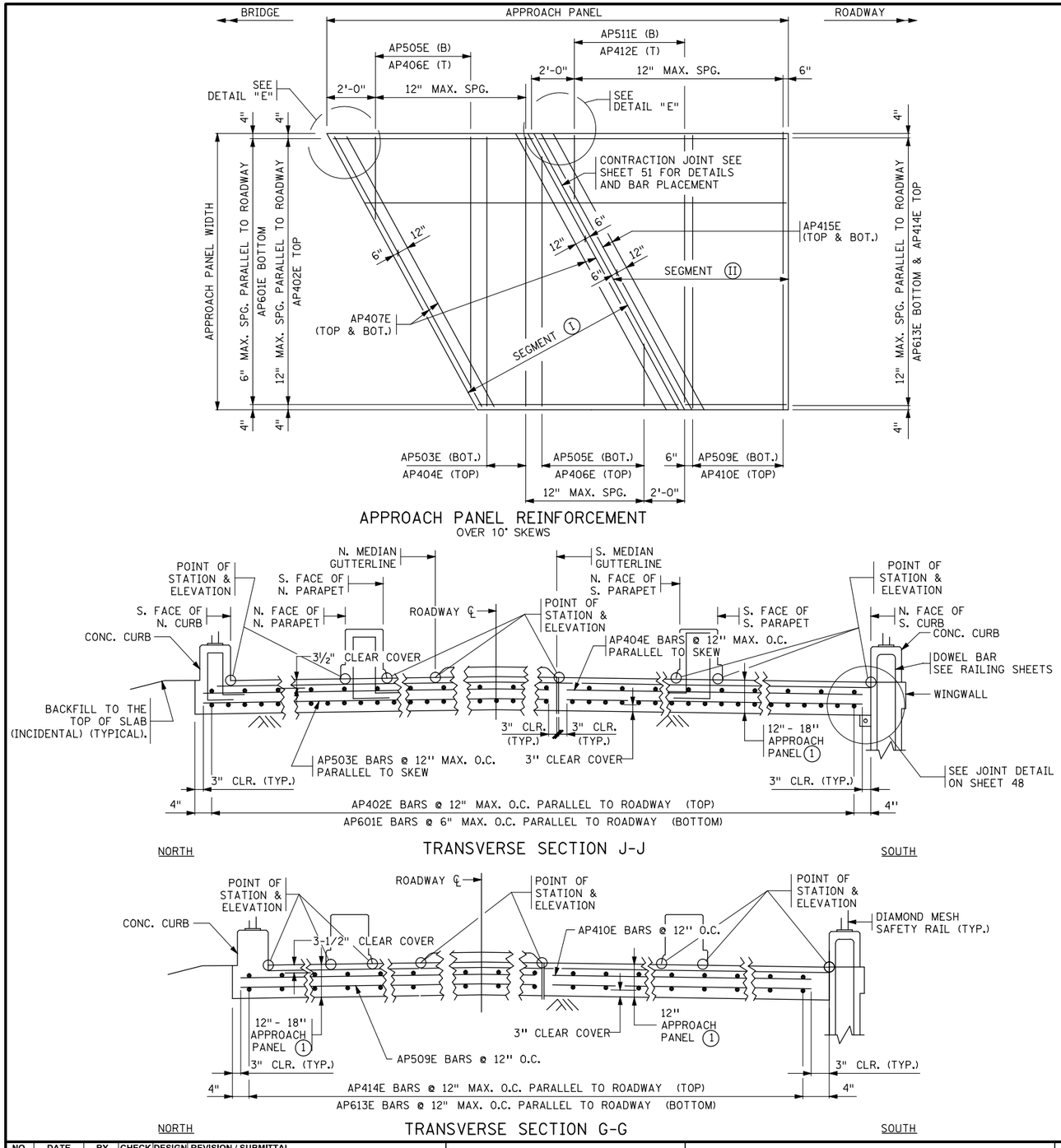

APPROACH PANEL REINFORCEMENT
OVER 10° SKEWS

TRANSVERSE SECTION J-J

TRANSVERSE SECTION G-G

ESTIMATED REINFORCEMENT QUANTITY FOR BRIDGE APPROACH PANELS

TYPE	LOCATION	ESTIMATIED WEIGHT
PANEL SEGMENT (I) (OVER 10°)	BRIDGE TO CONTRACTION JOINT	48.5 LB./SQ. YD.
PANEL SEGMENT (II) (OVER 10°)	CONTRACTION JOINT TO END OF APPROACH PANEL	35.0 LBS/SQ. YD.

NOTES:

TRANSVERSE BARS IN BOTH PANEL SEGMENTS ARE PERPENDICULAR TO ROADWAY CENTERLINE EXCEPT AP407E ARE PARALLEL TO SKEW IN SEGMENT (I) AND AP415E ARE PARRALLEL TO SKEW IN SEGMENT (II).

LONGITUDINAL BARS IN BOTH PANEL SEGMENTS ARE PARALLEL TO ROADWAY CENTERLINE.

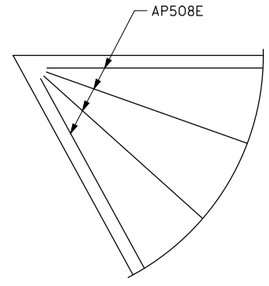

DETAIL "E"
FAN 4-AP508E BARS AS SHOWN
IN ACUTE CORNERS FOR SKEWS OVER 30°.

BILL OF REINFORCEMENT FOR BRIDGE APPROACH PANELS

CONTRACTOR IS REQUIRED TO COMPLETE THE BILL OF REINFORCEMENT TABLE AND PREPARE SHOP DRAWINGS AND SUBMIT THEM TO THE PROJECT ENGINEER AT LEAST 3 WEEKS BEFORE REBAR FABRICATION.

BAR	NO.	LENGTH	SHAPE	LOCATION
AP601E	--	--'-___	———	BOTTOM LONGITUDINAL
AP402E	--	--'-___	———	TOP LONGITUDINAL
AP503E	--	--'-___	———	BOTTOM TRANSVERSE
AP404E	--	--'-___	———	TOP TRANSVERSE
AP505E	- SER. OF --	--'-___ TO --'-___	———	BOTTOM TRANSVERSE
AP406E	- SER. OF --	--'-___ TO --'-___	———	TOP TRANSVERSE
AP407E	--	--'-___	———	TOP & BOTTOM EDGE
AP508E	--	8'-0	———	TOP CORNER - FAN
AP509E	--	--'-___	———	BOTTOM TRANSVERSE
AP410E	--	--'-___	———	TOP TRANSVERSE
AP511E	- SER. OF --	--'-___ TO --'-___	———	BOTTOM TRANSVERSE
AP412E	- SER. OF --	--'-___ TO --'-___	———	TOP TRANSVERSE
AP613E	- SER. OF --	--'-___ TO --'-___	———	BOTTOM LONGITUDINAL
AP414E	- SER. OF --	--'-___ TO --'-___	———	TOP LONGITUDINAL
AP415E	--	--'-___	———	TOP & BOTTOM EDGE
AP616E	--	5'-0	———	C2H-D JOINT

GENERAL NOTES:

AS PER MNDOT SPEC. 3301, USE EPOXY COATED GRADE 60 REINFORCEMENT BARS IN APPROACH PANEL, CONCRETE SILL AND CURB TRANSITION.

BARS MARKED WITH THE SUFFIX "E" SHALL BE EPOXY COATED IN ACCORDANCE WITH Mn/DOT SPEC. 3301.

FOR VARIABLE ROADWAY WIDTHS, VARY THE LAP LENGTH OF THE REINFORCEMENT.

MINIMUM REINFORCEMENT LAP LENGTHS ARE AS FOLLOWS: NO. 4 BAR = 1'-8", NO. 5 BAR = 2'-1", NO. 6 BAR = 2'-6".

ALL LAP SPLICES SHALL BE STAGGERED SUCH THAT NO MORE THAN 50% OF REBAR IS SPLICED AT THE SAME LOCATION.

(1) APPROACH SLAB THICKNESS IS 12" AT ROADWAY. (10" SLAB + 2" WEARING COURSE). APPROACH SLAB THICKNESS IS 12" TO 18" (12" TO 18" MONOLITHIC) AT SIDEWALK.

NO.	DATE	BY	CHECK	DESIGN	REVISION / SUBMITTAL

DESIGNED BY: JBW CHECKED BY: BLF
DRAWN BY: NAO CHECKED BY: JBW

AECOM Kimley»Horn

90% SUBMISSION - 01/22/16

METROPOLITAN COUNCIL

SOUTHWEST

CIVIL - VOLUME 4G
CSAH 40 (GLENWOOD AVENUE) - WEST
BRIDGE 27C16
APPROACH PANEL DETAILS 3

DISCIPLINE: STRUCTURES
SHEET NAME: CBR27C16-BRG-DTL-001-3

SHEET 50 OF 68

Jan. 14 2016 11:15 am V:\3400_ADC\CAD\SEGMENT E4\PLAN SHEETS\STRUCTURES\27C16\CBR27C16-BRG-DTL-001.dwg By: phil.horton

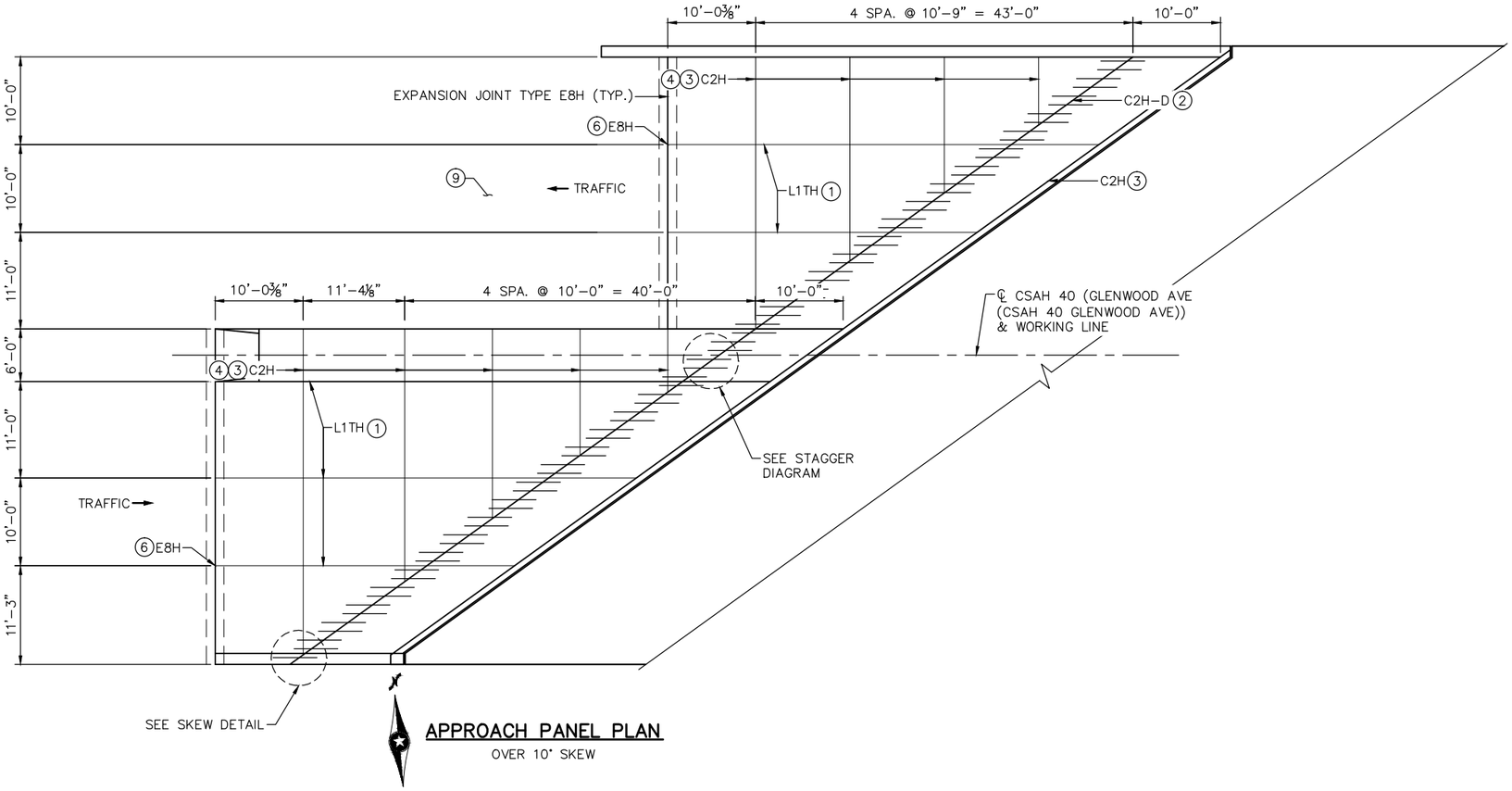

APPROACH PANEL PLAN
OVER 10° SKEW

APPROACH PANEL JOINT LAYOUT NOTES:

1. L1TH LONGITUDINAL JOINT.
2. USE JOINT TYPE C2H-D WITH AP616E BARS AT 12-INCH SPACING AT MID DEPTH OF THE SLAB, PARALLEL TO THE CENTERLINE OF THE ROADWAY. AP616E BARS ARE 5'-0" LONG. PLACE THE BAR WITH 2'-0" ON ONE SIDE OF THE JOINT AND 3'-0" ON THE OPPOSITE SIDE OF THE JOINT. ALTERNATE THE 2'-0" AND 3'-0" DIMENSIONS AS SHOWN ON THE PLAN. THE C2H-D JOINT AND AP616E BARS ARE REQUIRED ON ALL PANELS WITH A SKEW OVER 10 DEGREES.
3. C2H CONTRACTION JOINT.
4. MAXIMUM PANEL LENGTH OF 20'-0" FOR UP TO 40° SKEWS, 15'-0" FOR SKEWS OVER 40°.
5. ALL JOINTS SHALL BE SAWCUT. SAWCUTS SHALL BE MADE WHILE THE CONCRETE IS STILL GREEN. WHEN A CONCRETE WEARING COURSE IS SPECIFIED, THE JOINTS SHALL BE SAWN THROUGH BOTH THE WEARING COURSE AND THE UNDERLYING APPROACH SLAB IN A SINGLE OPERATION.
6. E8H JOINT REQUIRED IN CURB ADJACENT TO E8H JOINT.
7. SEE STANDARD PLANS 5-297.229 AND SHEET 48 FOR JOINT DETAIL FOR CURB ON WINGWALL.
8. WHEN SKEW IS OVER 45°. THE JOINT SHALL BE PERPENDICULAR TO GUTTER FOR 1' (TYP).
9. SEE CIVIL PLAN FOR PAVEMENT AND SHOULDER WIDTHS AND CONFIGURATION.

NOTES:

SEE SHEET 48 FOR LOCATION OF SECTION A–A.

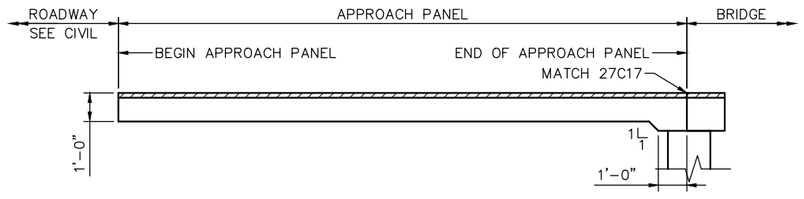

SECTION A–A

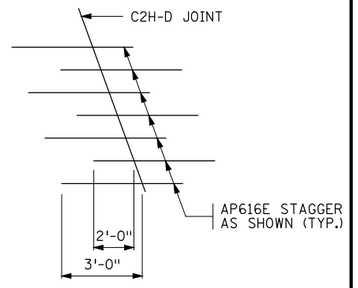

STAGGER DIAGRAM

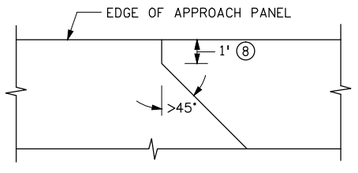

SKEW DETAIL
(PLAN VIEW)

NO.	DATE	BY	CHECK	DESIGN	REVISION / SUBMITTAL

DESIGNED BY: JBW | CHECKED BY: BLF
DRAWN BY: NAO | CHECKED BY: JBW

AECOM Kimley»Horn

90% SUBMISSION - 01/22/16

METROPOLITAN COUNCIL

SOUTHWEST

CIVIL - VOLUME 4G
CSAH 40 (GLENWOOD AVENUE) - WEST
BRIDGE 27C16
APPROACH PANEL DETAILS 4

DISCIPLINE: STRUCTURES
SHEET NAME: CBR27C16-BRG-DTL-001-4

SHEET 51 OF 68

Jan, 14 2016 11:15 am V:\3400_ADC\CAD\SEGMENT E4\PLAN SHEETS\STRUCTURES\27C16\CBR27C16-BRG-DTL-001.dwg By: phil.horton

EXPANSION JOINTS

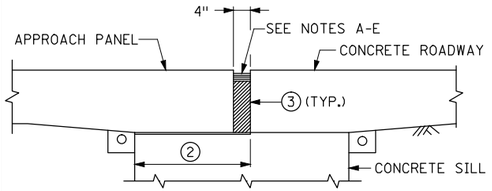

E8H JOINT DETAIL AT PAVEMENT

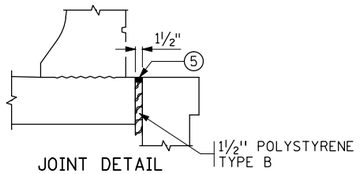

JOINT DETAIL
(CONCRETE CURB ON APPROACH PANEL)
(A)

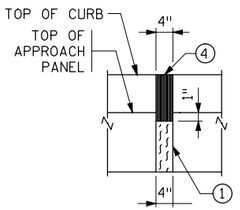

ELEVATION



SECTION THRU CURB

E8H JOINT AT CURB

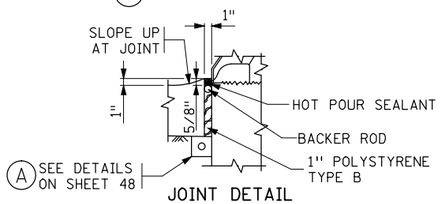

JOINT DETAIL
(CONCRETE CURB ON WINGWALL)
(A)

EXPANSION JOINT NOTES:

(1) PREFORMED JOINT FILLER MATERIAL, SPEC. 3702.

(2) PLACE PLASTIC SHEETING SPEC. 3756 AS APPROVED BY THE ENGINEER TO BREAK BOND. COVER AREA SHOWN IN DETAIL. SEE SILL DETAILS ON SHEET 49. (A)

(3) THE JOINT FACES SHALL BE CLEANED AND DRIED BY SANDBLASTING AND AIR BLASTING PRIOR TO SEALING THE JOINT.

(4) HOT POUR JOINT SEALER SPEC. 3725. TOP OF SEALER FLUSH TO 1/8 INCH BELOW TOP OF PAVEMENT SURFACE. MAKE TOP OF SEALER FOR CURB SECTION E8H JOINTS FLUSH WITH SURFACE (+ 1/8 INCH OR - 1/8 INCH).

(5) SEAL WITH SELF-LEVELING SILICONE PER MNDOT 3722.

E8H PRESSURE RELIEF JOINT MATERIAL INSTALLATION INSTRUCTIONS:

SEE MNDOT APPROVED/QUALIFIED PRODUCTS LIST.

FURNISH AND INSTALL JOINT MATERIAL IN ACCORDANCE WITH THE MANUFACTURER'S RECOMMENDATIONS AND THE FOLLOWING:

(A) EXPANSION JOINT FILLER MATERIALS USED FOR A 4 INCH PRESSURE RELIEF JOINT CONSISTS OF A PREFORMED FOAM PRODUCT HAVING MINIMUM DIMENSIONS OF 4.5 INCHES IN WIDTH (MAY BE LAMINATED) AND 8 INCHES IN DEPTH, AND A MINIMUM LENGTH OF 10 FEET. WHEN THE CONCRETE DEPTH IS GREATER THAN THE DEPTH OF THE PRESSURE RELIEF MATERIAL, FILL THE VOID BELOW THE MATERIAL WITH POLYSTYRENE. FURNISH AND INSTALL THE JOINT MATERIAL UNDER COMPRESSION WITH A LUBRICANT ADHESIVE APPLIED TO THE CONCRETE CONTACT SURFACES.

(B) SAW OR FORM THE JOINTS 4 INCHES WIDE BY THE FULL-DEPTH OF THE PANEL. INSPECT TO ASSURE THAT THE INSIDE WALLS OF THE JOINT HAVE BEEN SANDBLASTED, ARE DRY, SMOOTH AND FREE OF DEBRIS AND LOOSE PARTICLES. APPLY TAPE TO THE TOP 1 INCH OF THE INSIDE WALLS TO PREVENT THE LUBRICANT ADHESIVE FROM CONTAMINATING THE CONCRETE BONDING SURFACES OF THE SUBSEQUENTLY PLACED HOT POUR JOINT SEALER.

(C) PAINT THE INSIDE WALLS OF THE JOINT WITH LUBRICANT ADHESIVE AT THE RATE OF 1 GALLON PER 50 LINEAL FEET OF JOINT.

(D) PINCH THE BOTTOM OF THE MATERIAL TOGETHER AND PUSH IT DOWN INTO THE JOINT. WALK THE MATERIAL DOWN INTO THE JOINT; USE A SLEDGEHAMMER AND A 2 X 4 IF NECESSARY. APPLY LUBRICANT ADHESIVE TO THE ENDS OF THE PREFORMED FOAM MATERIAL WHEN BUTTING TWO PIECES TOGETHER.

(E) FURNISH AND INSTALL THE FOAM RELIEF JOINT MATERIAL TO A DEPTH OF APPROXIMATELY 7/8 INCH BELOW THE FINISHED CONCRETE SURFACE. AFTER INSTALLATION, REMOVE THE TAPE AND FILL THE VOID ON TOP OF THE FOAM MATERIAL WITH APPROXIMATELY 1/2 INCH OF HOT POUR JOINT SEALER (MNDOT 3723 OR 3725) TO A LEVEL OF 3/8 INCH +/- 1/4 INCH BELOW THE FINISHED CONCRETE SURFACE. THE HOT POUR JOINT SEALER SHOULD ONLY SLIGHTLY MELT INTO THE FOAM JOINT MATERIAL (TO PREVENT EXCESSIVE MELTING OF THE JOINT MATERIAL, PLACE THE HOT POUR SEALER AT THE LOWER END OF THE TEMPERATURE SPECIFICATION). CHECK FOR CORRECT TEMPERATURE BY PLACING HOT POUR SEALER ON A SAMPLE OF WASTE FOAM MATERIAL.

JOINT DETAILS

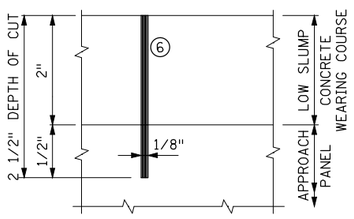

C2H & L1TH WITH CONCRETE WEARING COURSE (6)
(SAWED & SEALED PER SPEC. 3725)

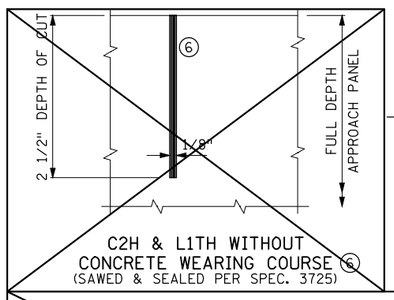

C2H & L1TH WITHOUT CONCRETE WEARING COURSE (6)
(SAWED & SEALED PER SPEC. 3725)

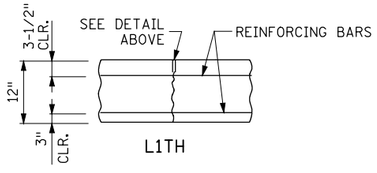

L1TH

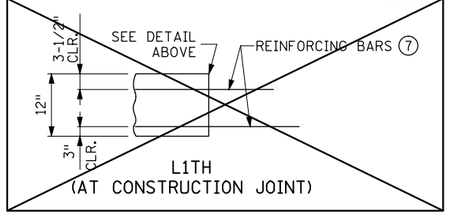

L1TH
(AT CONSTRUCTION JOINT)

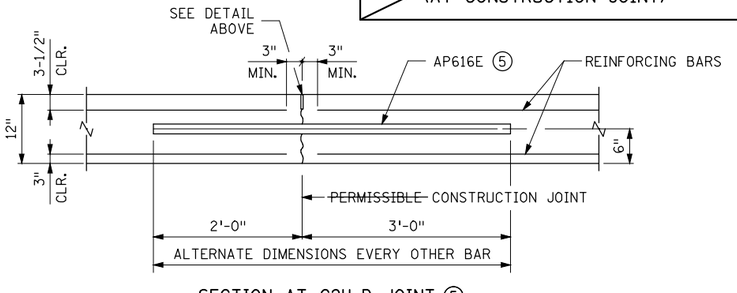

SECTION AT C2H-D JOINT (5)

JOINT NOTES:

(5) PERMISSIBLE CONSTRUCTION JOINT. AP616E BARS AT 12-INCH SPACING AT MID DEPTH OF SLAB, PARALLEL TO THE CENTERLINE OF THE ROADWAY. AP616E BARS ARE 5'-0" LONG. PLACE THE BAR WITH 2'-0" ON ONE SIDE OF THE JOINT AND 3'-0" ON THE OPPOSITE SIDE OF THE JOINT. ALTERNATE THE 2'-0" AND 3'-0" DIMENSION AS SHOWN ON THE PLAN.

(6) CLEAN AND DRY FULLY CURED JOINT FACES BY SANDBLASTING PRIOR TO SEALING THE JOINT.

(7) WHEN CONSTRUCTING A L1TH JOINT UNDER STAGED CONSTRUCTION, EXTEND NO. 4 BARS 1'-8" AND NO. 5 BARS 2'-1" PAST THE EDGE OF THE FIRST CONCRETE POUR. CONSTRUCT L1TH JOINT ACCORDING TO DETAIL SHOWN AFTER ADJACENT POUR IS COMPLETE.

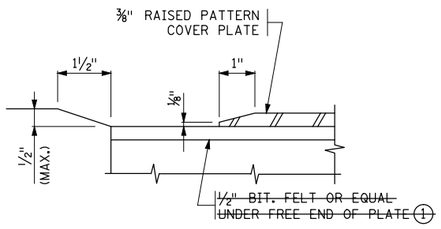

DETAIL "A"

SHEET MODIFICATION:
(A) DENOTES MODIFICATION TO STANDARD SHEET

SIDEWALK COVER PLATE

GENERAL NOTES:

GALVANIZE STRUCTURAL STEEL AFTER FABRICATION PER Mn/DOT SPEC. 3394
GALVANIZE FASTENERS PER Mn/DOT SPEC.3392.

STRUCTURAL STEEL SHALL COMPLY WITH Mn/DOT SPEC. 3306 OR Mn/DOT SPEC. 3309.

SHOP DRAWING SUBMITTALS REQUIRED PER Mn/DOT SPEC. 2471.

CAP SCREWS SHALL BE COUNTERSUNK ℄" BELOW TOP OF PLATE.

FURNISHING AND INSTALLING SIDEWALK COVER PLATE IS INCIDENTAL.

(1) USE LARGEST SINGLE PIECE POSSIBLE. USE OF SMALL PIECES OR SCRAPS SECURED TOGETHER IS PROHIBITED.

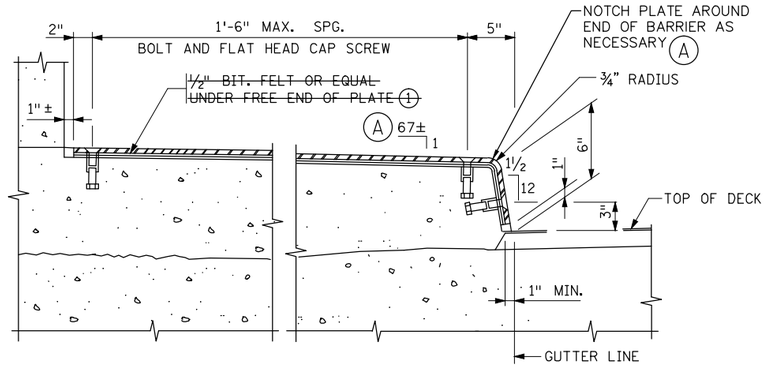

SECTION THROUGH SIDEWALK

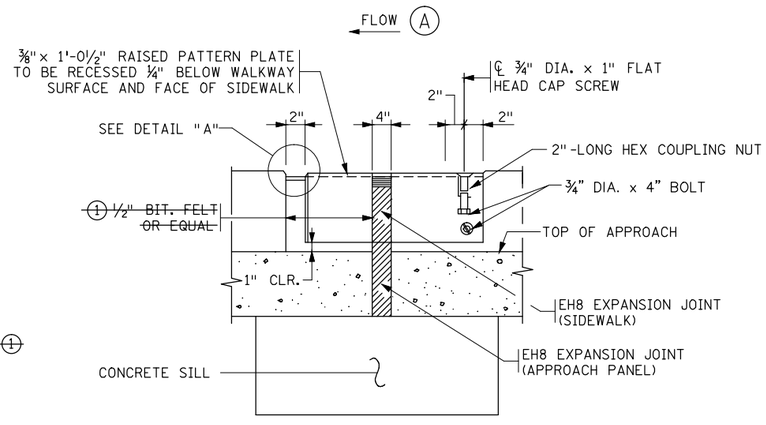

SIDEWALK ELEVATION

DRAFT-WORK IN PROCESS

STANDARD PLAN SHEET NO.	TITLE:
5-297.229 (MOD.)	~~BRIDGE~~ APPROACH PANEL ~~JOINT~~ DETAILS 5
STANDARD APPROVED: DECEMBER 20, 2011	

REVISION DATE
3-22-2013

SHEET NO. **52** OF **68** SHEETS

Jan, 14 2016 11:15 am V:\3400_ADC\CAD\SEGMENT E4\PLAN SHEETS\STRUCTURES\27C16\CBR27C16-BRG-DTL-001.dwg By: phil.horton

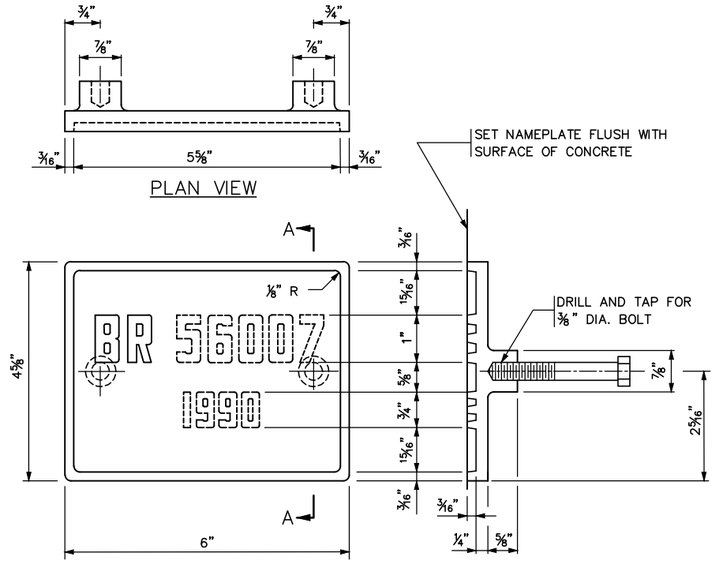

THE DASHED NUMBERS SHOWN ABOVE ARE FOR ILLUSTRATION.
DATA TO BE SHOWN ON NAMEPLATE IS AS FOLLOWS:

BRIDGE 27C16

YEAR ①

NUMBERS FOR NAMEPLATE

NOTES:

MATERIAL SHALL COMPLY WITH SPEC. 3327.

LETTERS AND NUMBERS SHALL CONFORM TO THOSE SHOWN.

DRAFT ON LETTERS AND NUMBERS SHALL NOT BE MORE THAN 3" IN 12".

HORIZONTAL SPACING OF LETTERS AND NUMBERS SHALL PRODUCE A BALANCED LAYOUT IN PROPORTION TO SPACING SHOWN.

TOP SURFACE OF LETTERS, NUMBERS AND FRAMES SHALL BE BURNISHED.

FURNISH 2 STEEL BOLTS ⅜ " DIA. x 3" LONG WITH EACH PLATE.

ALL DIMENSIONS FOR ¾" HIGH LETTERS AND NUMBERS SHALL BE IN DIRECT PROPORTION TO THOSE SHOWN FOR THE 1" HIGH LETTERS AND NUMBERS.

① YEAR OF CONSTRUCTION

APPROVED: NOVEMBER 22, 2002	STATE OF MINNESOTA DEPARTMENT OF TRANSPORTATION	REVISION 09–11–2014	DETAIL NO.
Daniel L Hovsgaard STATE BRIDGE ENGINEER	BRIDGE NAMEPLATE (FOR NEW BRIDGES)		B101

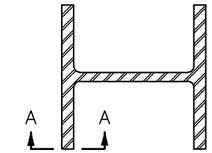

SECTION AT SPLICE

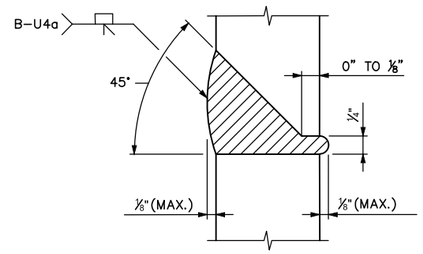

SECTION A–A

100% BUTT WELDED PILE SPLICE

NOTES:

CELLULOSIC TYPE ELECTRODES E–6010 OR E–6011 SHALL BE USED FOR 100% BUTT WELDED SPLICES.

ELECTRODES WHICH HAVE BECOME WET, SOILED OR DAMAGED SHALL NOT BE USED.

WELDING SHALL NOT BE DONE WHEN THE AMBIENT TEMPERATURE IS LOWER THAN 0° F. OR WHEN THE PILE IS WET OR EXPOSED TO FALLING RAIN OR SNOW. WHEN THE PILE METAL TEMPERATURE IS BELOW 32° F., THE PILE METAL IN THE AREA OF THE WELD SHALL BE HEATED TO A MINIMUM TEMPERATURE OF 70° F. AND MAINTAINED AT THIS TEMPERATURE DURING WELDING.

APPROVED: NOVEMBER 22, 2002	STATE OF MINNESOTA DEPARTMENT OF TRANSPORTATION	REVISION: 11–06–2013	DETAIL NO.
Daniel L Hovsgaard STATE BRIDGE ENGINEER	PILE SPLICE (STEEL H BEARING PILES 10" TO 14")		B202

NO.	DATE	BY	CHECK	DESIGN	REVISION / SUBMITTAL

DESIGNED BY: HLR CHECKED BY: EJT
DRAWN BY: NAO CHECKED BY: JBW

AECOM Kimley»Horn

90% SUBMISSION - 01/22/16

METROPOLITAN COUNCIL

SOUTHWEST Green Line LRT Extension

CIVIL - VOLUME 4G
CSAH 40 (GLENWOOD AVENUE) - WEST
BRIDGE 27C16
BRIDGE DETAILS 1

DISCIPLINE: STRUCTURES
SHEET NAME: CBR27C16-BRG-DTL-002-1

SHEET 53 OF 68

Jan. 14 2016 11:15 am v:\3400_ADC\CAD\SEGMENT E4\PLAN SHEETS\STRUCTURES\27C16\CBR27C16-BRG-DTL-002.dwg By: phil.horton

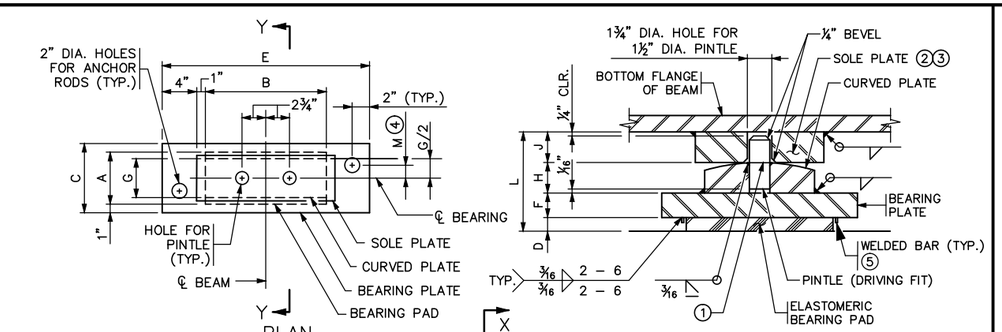

TABLE

ASSEMBLY TYPE	LOCATION	BEAM FLANGE WIDTH	BEARING PAD SIZE			SHAPE FACTOR	BEARING PLATE SIZE			CURVED PLATE SIZE				SOLE PLATE SIZE					PINTLE DIA.	ASSY. HEIGHT	ANCHOR ROD OFFSET	
			A	B	D		C	E	F	G	B	H	R (1)	WID.	LEN.	J1 (2)	J2 (2)	J (2)		L	+/- (4)	M
F1	W. ABUT.	15"	12"	16"	½"	6.9	14"	26"	1½"	4½"	16"	1¼"	16"	6"	18"	1¼"	1⅞"	1⅝"	1½"	4⅞"	___	___
F2	W. ABUT.	13¼"	10"	14"	½"	5.8	12"	24"	1½"	4½"	14"	1¼"	16"	6"	16"	1¼"	1⅞"	1⅝"	1½"	4⅞"	___	___

NOTES:

PROVIDE ELASTOMERIC MATERIALS AND PAD CONSTRUCTION PER SPEC. 3741.

PROVIDE STEEL PLATES PER SPEC. 3306 EXCEPT THE SOLE PLATE. PROVIDE SOLE PLATE WITH THE SAME MATERIAL SPECIFICATION AS THE STEEL BEAMS.

PROVIDE ANCHOR RODS PER SPEC. 3385, TYPE A. GALVANIZE PER SPEC. 3392.

FOR SPANS UP TO 150 FEET, USE 1½" DIAMETER ANCHOR RODS. ABOVE 150 FOOT SPANS, DESIGN ANCHOR RODS PER AASHTO DESIGN CRITERIA.

PINTLES SHALL COMPLY WITH SPEC. 3309.

GALVANIZE STRUCTURAL STEEL BEARING ASSEMBLY AFTER FABRICATION PER SPEC. 3394, EXCEPT AS NOTED.

~~PAYMENT FOR BEARING ASSEMBLY SHALL INCLUDE ALL MATERIAL ON THIS DETAIL EXCEPT THE SOLE PLATE. THE SOLE PLATE IS INCLUDED IN THE WEIGHT OF STRUCTURAL STEEL.~~

(1) 16" MIN. RADIUS UNLESS OTHERWISE SPECIFIED IN THE TABLE. THE MAX. RADIUS IS 24". FINISH TO 250 MICRO. THE FINISHED THICKNESS OF THE PLATE MAY BE 1/16" LESS THAN SHOWN.

(2) WHEN THE SOLE PLATE IS TAPERED, DIMENSIONS "J" AND "L" ARE THICKNESS OF SOLE PLATE AND BEARING ASSEMBLY AT CENTERLINE OF BEARING.

(3) DO NOT GALVANIZE THIS PLATE.

(4) "+" DENOTES OFFSET AS SHOWN.
"-" DENOTES OFFSET OPPOSITE OF SHOWN.

(5) ⅜" X ⅜" BAR INSTALLED ON BEARING PLATE AROUND PERIMETER OF BEARING PAD. BAR LENGTH IS 2" LESS THAN ADJACENT PAD DIMENSION, CENTERED ON PAD. CENTERLINE OF BAR TO EDGE OF PAD DIMENSION = ½".

(6) MARK THICKER SIDE OF SLOPED PLATES WITH AN "H" FOR PLACEMENT, SEE FRAMING PLAN SHEET 22.

SHEET MODIFICATION:
(A) DENOTES MODIFICATION TO STANDARD SHEET

DESIGN DATA:
MAXIMUM HORIZONTAL LOAD IS 70 KIPS. MINIMUM SOLE PLATE THICKNESS IS 1¼".

APPROVED: NOVEMBER 22, 2002
STATE BRIDGE ENGINEER

STATE OF MINNESOTA
DEPARTMENT OF TRANSPORTATION

CURVED PLATE BEARING ASSEMBLY
(STEEL BEAMS)
(FIXED)

REVISED
08-10-2006
12-17-2008
11-06-2013
11-03-2015

DETAIL NO.
B354
(MOD.)

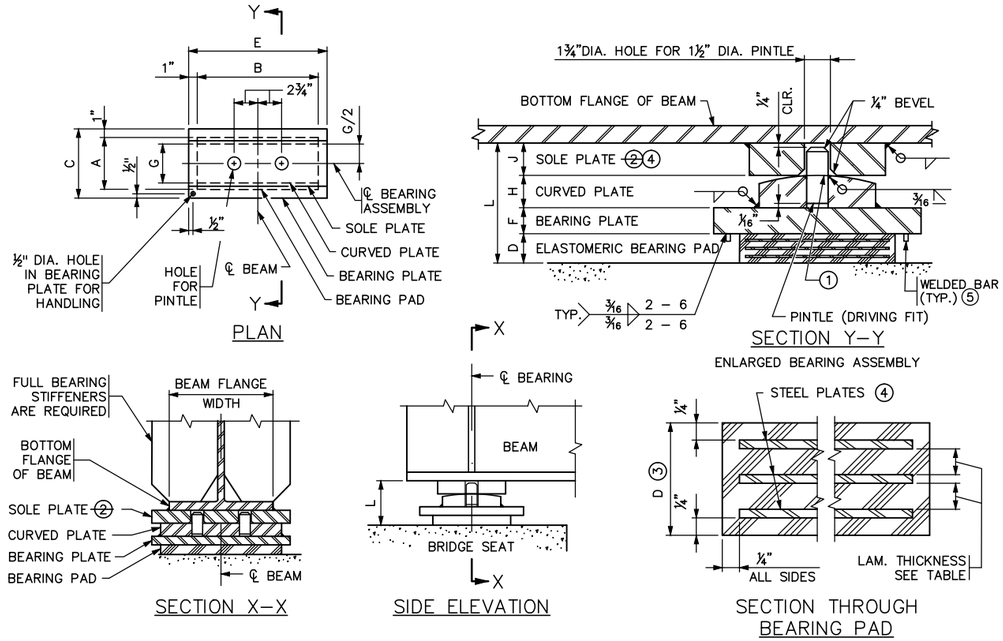

TABLE

ASSEMBLY TYPE	LOCATION	BEAM FLANGE WIDTH	BEARING PAD SIZE			STEEL PLATES		LAMINATES		SHAPE FACTOR	BEARING PLATE SIZE			CURVED PLATE SIZE				SOLE PLATE SIZE			PINTLE DIA.	ASSY. HEIGHT
			A	B	D	NO.	THICK.	NO.	THICK.		C	E	F	G	B	H	R (1)	WID.	LEN.	J (2)		L
E1	W. PIER	15"	10"	16"	2⅛"	4	⅛"	3	⅜"	8.2	12"	18"	1½"	4½"	16"	1¼"	16"	6"	18"	1¼"	1½"	6⅜"
E2	W. PIER	13¼"	8"	14"	2⅛"	4	⅛"	3	⅜"	6.8	10"	16"	1½"	4½"	14"	1¼"	16"	6"	16"	1¼"	1½"	6⅜"

NOTES:

PROVIDE ELASTOMERIC MATERIALS AND PAD CONSTRUCTION PER SPEC. 3741.

PROVIDE STEEL PLATES PER SPEC. 3306 EXCEPT THE SOLE PLATE. PROVIDE SOLE PLATE WITH THE SAME MATERIAL SPECIFICATION AS THE STEEL BEAMS.

PROVIDE PINTLES PER SPEC. 3309.

GALVANIZE STRUCTURAL STEEL BEARING ASSEMBLY AFTER FABRICATION PER SPEC. 3394, EXCEPT AS NOTED.

~~PAYMENT FOR BEARING ASSEMBLY INCLUDES ALL MATERIAL ON THIS DETAIL EXCEPT THE SOLE PLATE. THE SOLE PLATE IS INCLUDED IN THE WEIGHT OF STRUCTURAL STEEL.~~

(1) THE MIN. RADIUS IS 16" UNLESS OTHERWISE SPECIFIED IN THE TABLE. THE MAX. RADIUS IS 24". FINISH TO 250 MICRO. THE FINISHED THICKNESS OF THE PLATE MAY BE 1/16" LESS THAN SHOWN.

~~(2) WHEN THE SOLE PLATE IS TAPERED, DIMENSIONS "J" AND "L" ARE THICKNESS OF SOLE PLATE AND BEARING ASSEMBLY AT CENTERLINE OF BEARING.~~

(3) THE TOTAL THICKNESS SHOWN INCLUDES THE STEEL PLATES.

(4) DO NOT GALVANIZE THIS PLATE.

(5) ⅜" X ⅜" BAR INSTALLED ON BEARING PLATE AROUND PERIMETER OF BEARING PAD. BAR LENGTH IS 2" LESS THAN ADJACENT PAD DIMENSION, CENTERED ON PAD. CENTERLINE OF BAR TO EDGE OF PAD DIMENSION = ½".

DESIGN DATA:
MAXIMUM HORIZONTAL LOAD IS 70 KIPS. MINIMUM SOLE PLATE THICKNESS IS 1¼".

APPROVED: NOVEMBER 22, 2002
STATE BRIDGE ENGINEER

STATE OF MINNESOTA
DEPARTMENT OF TRANSPORTATION

CURVED PLATE BEARING ASSEMBLY
(STEEL BEAMS)
(EXPANSION)

REVISED
08-10-2006
12-17-2008
11-03-2015

DETAIL NO.
B355

NO.	DATE	BY	CHECK	DESIGN	REVISION / SUBMITTAL

DESIGNED BY: HLR CHECKED BY: EJT
DRAWN BY: NAO CHECKED BY: JBW

AECOM Kimley»Horn

90% SUBMISSION - 01/22/16

METROPOLITAN COUNCIL

SOUTHWEST Green Line LRT Extension

CIVIL - VOLUME 4G
CSAH 40 (GLENWOOD AVENUE) - WEST
BRIDGE 27C16
BRIDGE DETAILS 2

DISCIPLINE: STRUCTURES
SHEET NAME: CBR27C16-BRG-DTL-002-2

SHEET 54 OF 68

Jan, 14 2016 11:15 am V:\3400_ADC\CAD\SEGMENT E4\PLAN SHEETS\STRUCTURES\27C16\CBR27C16-BRG-DTL-002.dwg By: phil.horton

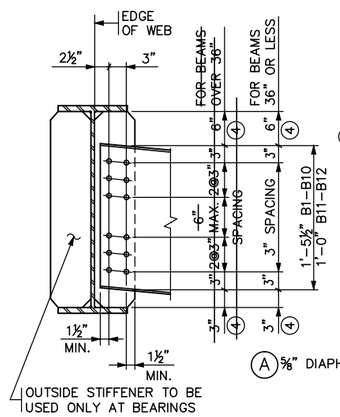

FASCIA BEAM

AT INTERMEDIATE DIAPHRAGMS

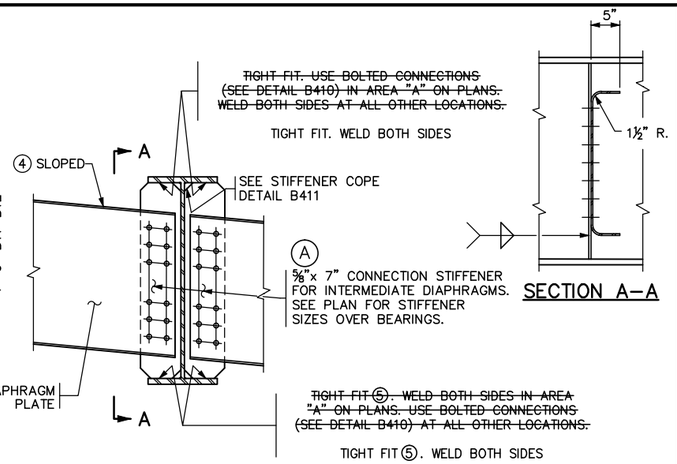

SECTION A–A

INTERIOR BEAM

AT PIER AND INTERMEDIATE DIAPHRAGMS

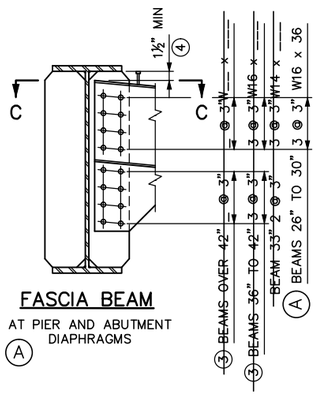

FASCIA BEAM

AT PIER AND ABUTMENT DIAPHRAGMS

A

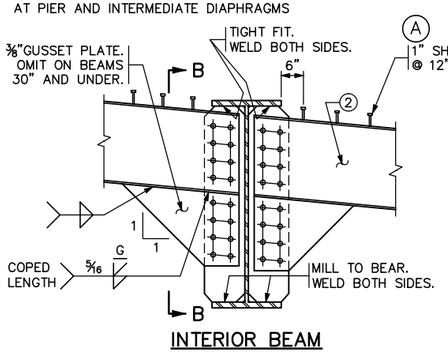

INTERIOR BEAM

A AT PIER AND ABUTMENT DIAPHRAGMS

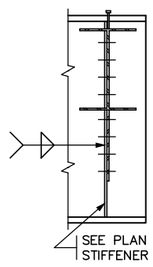

SECTION B–B

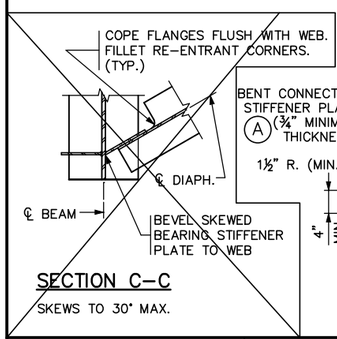

SECTION C–C

SKEWS TO 30° MAX.

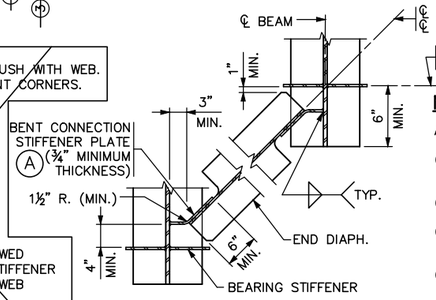

SECTION C–C

SKEWS OVER 30° TO 60°

SHEET MODIFICATION:
A DENOTES MODIFICATION TO STANDARD SHEET

NOTES:

ALL STEEL SHALL CONFORM TO Mn/DOT SPEC. 3309.

1. USE SAME SHEAR STUD HEIGHT AS USED ON THE BEAMS.
2. SEE FRAMING PLAN FOR SIZE OF DIAPHRAGM.
3. FOR PLATE GIRDERS, END DIAPHRAGMS SHALL BE AT LEAST THE BEAM HEIGHT.
4. DIAPHRAGMS MAY BE PLACED LEVEL, PROVIDED MINIMUM CLEARANCES ARE MET.
5. MILL TO BEAR FOR BEARING STIFFENERS.

APPROVED: MARCH 26, 2009	STATE OF MINNESOTA DEPARTMENT OF TRANSPORTATION	REVISED	DETAIL NO.
Daniel T. Hogan STATE BRIDGE ENGINEER	BOLTED DIAPHRAGMS (FOR STEEL BEAMS)		B402 (MOD)

NO.	DATE	BY	CHECK	DESIGN	REVISION / SUBMITTAL

DESIGNED BY: HLR | CHECKED BY: EJT
DRAWN BY: NAO | CHECKED BY: JBW

AECOM Kimley»Horn

90% SUBMISSION - 01/22/16

METROPOLITAN COUNCIL

SOUTHWEST Green Line LRT Extension

CIVIL - VOLUME 4G
CSAH 40 (GLENWOOD AVENUE) - WEST
BRIDGE 27C16
BRIDGE DETAILS 3

DISCIPLINE: STRUCTURES
SHEET NAME: CBR27C16-BRG-DTL-002-3

SHEET 55 OF 68

Jan, 14 2016 11:16 am V:\3400_ADC\CAD\SEGMENT E4\PLAN SHEETS\STRUCTURES\27C16\CBR27C16-BRG-DTL-002.dwg By: phil.horton

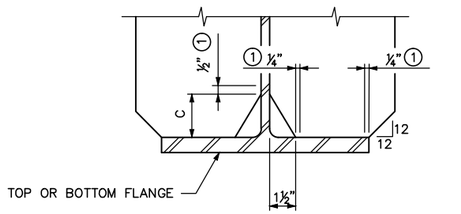

STIFFENER TO FLANGE CONNECTION

OPTION 1

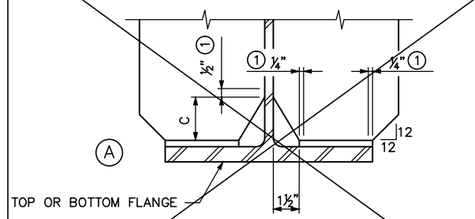

STIFFENER TO TAB PLATE CONNECTION

OPTION 1

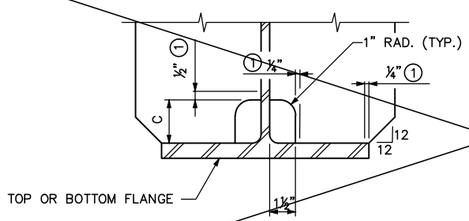

STIFFENER TO FLANGE CONNECTION

OPTION 2

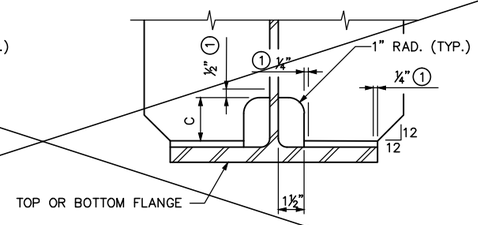

STIFFENER TO TAB PLATE CONNECTION

OPTION 2

STIFFENER COPE DETAIL

~~PLATE GIRDER OR~~ ROLLED BEAM

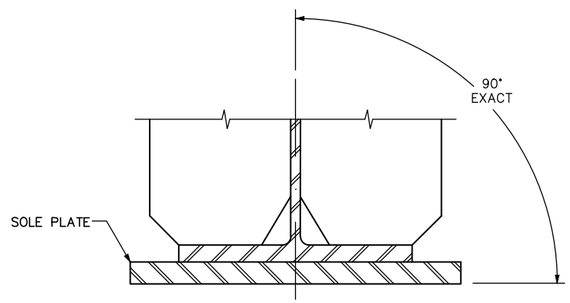

SOLE PLATE AT BEARING

SHEET MODIFICATION:

(A) DENOTES MODIFICATION TO STANDARD SHEET

WEB THICKNESS	DIMENSION C
½", 9/16", ⅝"	2½"
1/16", ¾", 1/16"	3"

(A)

NOTES:

(1) DO NOT WELD IN THIS AREA. SEE B402 FOR CONNECTION DETAILS.

(A)

APPROVED: OCTOBER 22, 2008	STATE OF MINNESOTA DEPARTMENT OF TRANSPORTATION	REVISION	DETAIL NO.
STATE BRIDGE ENGINEER	STIFFENER DETAILS (FOR STEEL BEAMS)		B411 (MOD)

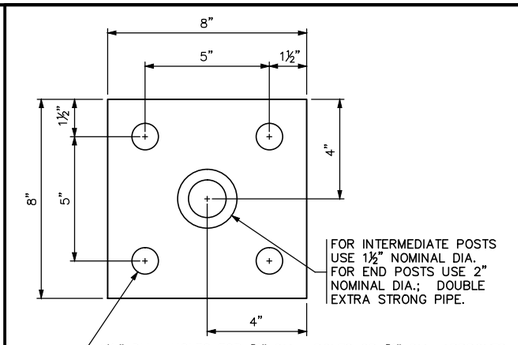

PLAN VIEW – TYPE A

ESTIMATED WEIGHT = 12 OR 14 LBS.

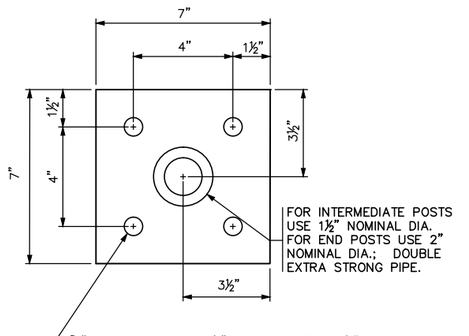

PLAN VIEW – TYPE B

ESTIMATED WEIGHT = 10 OR 12 LBS.

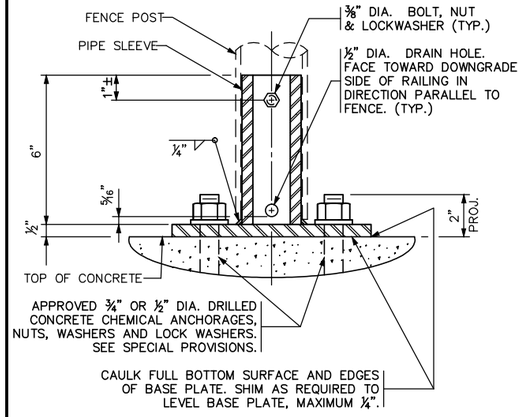

TYPICAL SECTION

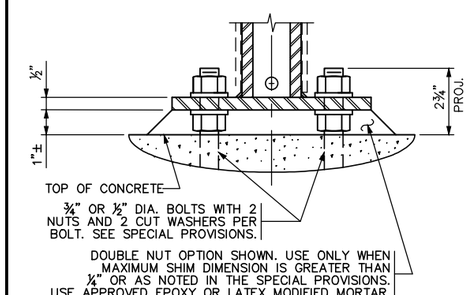

GROUT ALTERNATE

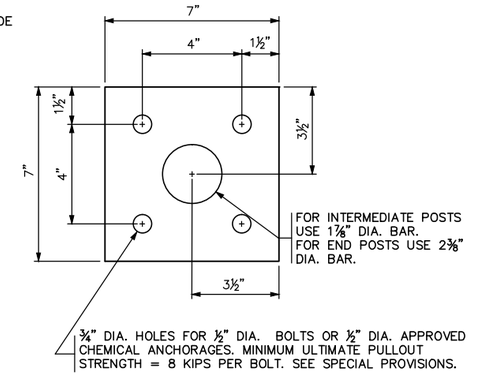

PLAN VIEW – TYPE C

ESTIMATED WEIGHT = 12 OR 15 LBS.

NOTES:

STRUCTURAL STEEL PER Mn/DOT SPEC. 3306

STRUCTURAL PIPE PER Mn/DOT SPEC. 3362

GALVANIZE THE FENCE POST ANCHORAGE AFTER FABRICATION PER Mn/DOT SPEC. 3394. GALVANIZE THE FASTENERS PER Mn/DOT SPEC. 3392.

DOUBLE EXTRA STRONG PIPE WEIGHTS:
1½" NOMINAL DIA. = 6.41 LBS./FT.
2" NOMINAL DIA. = 9.03 LBS./FT.

APPROVED: NOVEMBER 22, 2002	STATE OF MINNESOTA DEPARTMENT OF TRANSPORTATION	REVISION	DETAIL NO.
STATE BRIDGE ENGINEER	FENCE POST ANCHORAGE		B905

NO.	DATE	BY	CHECK	DESIGN	REVISION / SUBMITTAL

DESIGNED BY: HLR CHECKED BY: EJT

DRAWN BY: NAO CHECKED BY: JBW

AECOM Kimley»Horn

90% SUBMISSION - 01/22/16

METROPOLITAN COUNCIL

SOUTHWEST Green Line LRT Extension

CIVIL - VOLUME 4G
CSAH 40 (GLENWOOD AVENUE) - WEST
BRIDGE 27C16
BRIDGE DETAILS 4

DISCIPLINE: STRUCTURES

SHEET NAME: CBR27C16-BRG-DTL-002-4

SHEET 56 OF 68

Jan, 14 2016 11:16 am V:\3400_ADC\CAD\SEGMENT E4\PLAN SHEETS\STRUCTURES\27C16\CBR27C16-BRG-DTL-002.dwg By: phil.horton

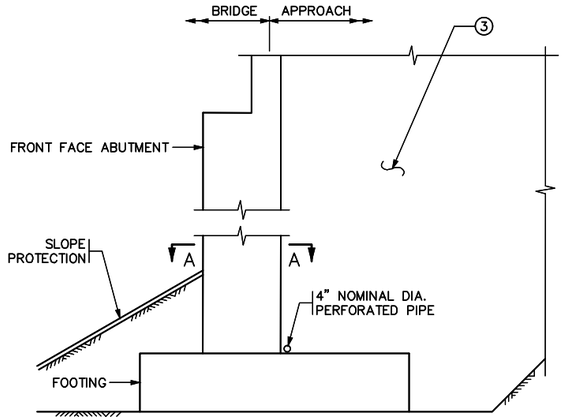

SECTION THROUGH PARAPET ~~AND SEMI INTEGRAL~~ ABUTMENTS

SHEET MODIFICATION:
(A) DENOTES MODIFICATION TO STANDARD SHEET

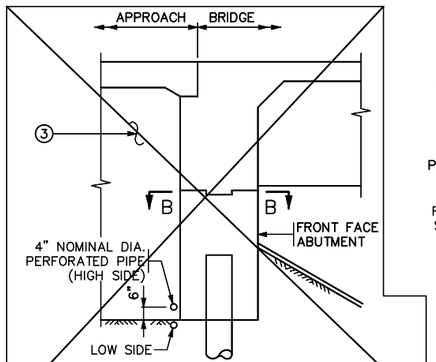

SECTION THROUGH INTEGRAL ABUTMENT

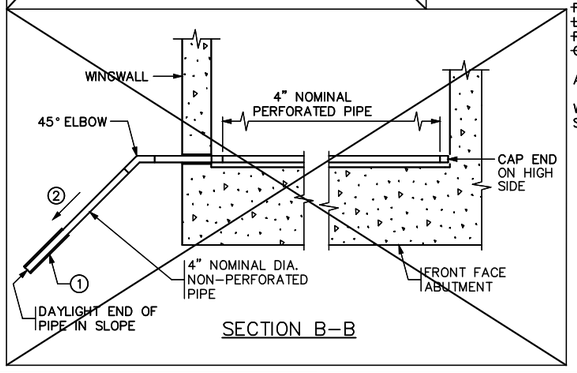

SECTION B–B

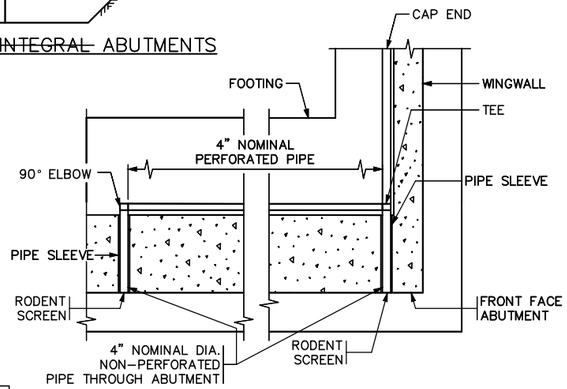

SECTION A–A (A)

NOTES:

~~PAYMENT WILL BE INCLUDED IN THE SINGLE LUMP SUM PRICE FOR "DRAINAGE SYSTEM TYPE (B910)", INCLUDES BUT IS NOT LIMITED TO 4" DIAMETER PERFORATED AND NON-PERFORATED PIPE, ELBOWS, END CAPS, COUPLINGS, SLEEVES AND PRECAST CONCRETE HEADWALLS.~~

ALL PIPE TO COMPLY WITH SPEC. 3245.

WRAP PERFORATED PIPE WITH GEOTEXTILE PER SPEC. 3733, TYPE 1. ATTACH TO PIPE PER SPEC. 2502.

(1) AT CONTRACTORS OPTION, MAY TIE APPROACH PANEL DRAINAGE SYSTEM AND ABUTMENT DRAINAGE SYSTEM INTO A SINGLE PRECAST CONCRETE HEADWALL OR INTO A CATCH BASIN AS LONG AS A MINIMUM OF 1% POSITIVE SLOPE CAN BE MANTAINED.

~~USE PRECAST CONCRETE HEADWALL WITH RODENT SCREEN. SEE STANDARD PLATE 3131 FOR DETAILS.~~

(2) ⅛" PER FT. MINIMUM SLOPE.

(3) REFER TO SHEET 2 FOR ABUTMENT BACKFILL REQUIREMENTS. (A)

APPROVED: JANUARY 13, 2015	STATE OF MINNESOTA DEPARTMENT OF TRANSPORTATION	REVISED	DETAIL NO.
Nancy Daubenberger STATE BRIDGE ENGINEER	DRAINAGE SYSTEM	12–02–2015	B910 (MOD)

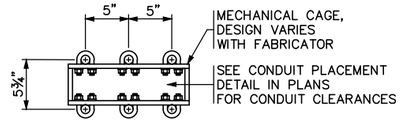

SECTION A–A

ALTERNATE MECHANICAL CAGE

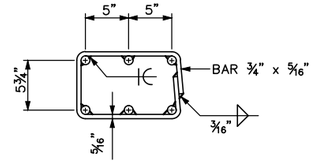

SECTION A–A

ALTERNATE WELDED CAGE

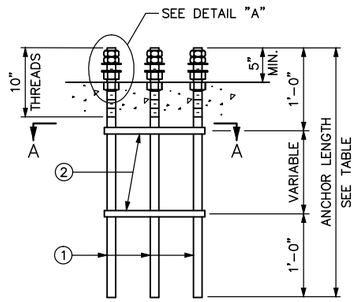

ELEVATION

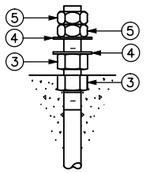

DETAIL "A"

SHEET MODIFICATION:
(A) DENOTES MODIFICATION TO STANDARD SHEET

STANDARD RAIL TYPES (SEE PLANS FOR TYPE)	ANCHOR LENGTH
~~TYPE "F" MEDIAN~~	~~3'–0"~~
~~TYPE "F" W/O CONCRETE WEARING COURSE~~	~~3'–0"~~
~~TYPE "F" W/ CONCRETE WEARING COURSE~~	~~3'–2"~~
~~TYPE "F" WITH SIDEWALK/ BRIDGE SLAB~~	~~3'–10"~~
~~TYPE "F" ON RETAINING WALL~~	~~3'–0"~~
~~CONCRETE PARAPET WITH FENCE~~	~~2'–8"~~
(A) CONCRETE CURB WITH FENCE	2'–3"

NOTES:

ALL RODS ARE TO BE 1" NOMINAL DIA. WITH 1 – 8UNC – 2A THREADS. HEAVY HEX NUTS, JAM NUTS, AND FLAT WASHERS PER Mn/DOT SPEC. 3391.2A FOR 1" DIA. THREADED RODS. NUTS TO BE TAPPED 64" OVERSIZED PRIOR TO GALVANIZING, AND RETAPPED TO STANDARD SIZE AFTER GALVANIZING.

GALVANIZE THREADED RODS, CAGES, AND NUTS AFTER FABRICATION AS PER Mn/DOT SPEC. 3392.

TOP OF THE LOWER NUTS SHALL BE FLUSH WITH TOP OF CONCRETE RAILING.

SUBSTITUTE MATERIALS PER Mn/DOT SPEC. 1605.

(1) THREADED RODS, STEEL AS PER Mn/DOT SPEC. 3309, 3310, OR 3385 TYPE B (6 REQUIRED).

(2) PROVIDE A MECHANICAL OR WELDED CAGE FOR ROD ALIGNMENT. STEEL AS PER Mn/DOT SPEC. 3306 (2 REQUIRED).

(3) HEAVY HEX NUTS FOR 1" DIA. RODS (12 REQUIRED).

(4) FLAT WASHERS FOR 1" DIA. RODS (12 REQUIRED).

(5) JAM NUTS FOR 1" DIA. RODS (12 REQUIRED).

APPROVED: NOVEMBER 22, 2002	STATE OF MINNESOTA DEPARTMENT OF TRANSPORTATION	REVISED	DETAIL NO.
Daniel J. Wogsyan STATE BRIDGE ENGINEER	ANCHOR BOLT CLUSTER FOR LIGHT POLES	10–26–2004 03–02–2005	B950 (MOD)

NO.	DATE	BY	CHECK	DESIGN	REVISION / SUBMITTAL

DESIGNED BY: HLR CHECKED BY: EJT
DRAWN BY: NAO CHECKED BY: JBW

AECOM Kimley»Horn

90% SUBMISSION - 01/22/16

METROPOLITAN COUNCIL

SOUTHWEST Green Line LRT Extension

CIVIL - VOLUME 4G
CSAH 40 (GLENWOOD AVENUE) - WEST
BRIDGE 27C16
BRIDGE DETAILS 5

DISCIPLINE: STRUCTURES
SHEET NAME: CBR27C16-BRG-DTL-002-5

SHEET 57 OF 68

Jan, 14 2016 11:16 am V:\3400_ADC\CAD\SEGMENT E4\PLAN SHEETS\STRUCTURES\27C16\CBR27C16-BRG-DTL-002.dwg By: phil.horton

CONCRETE WEARING COURSE

☐ LOW SLUMP

☐ OTHER _____
TYPE OR MANUFACTURER

EXPANSION JOINTS

JOINT MANUFACTURER

MANUFACTURER'S IDENTIFICATION _____
MFR'S No. AND/OR LETTER DESIGNATION FOR JOINT USED

GLAND MANUFACTURER _____
NAME AND ADDRESS (CITY, STATE)

SIZE OF GLAND _____

MANUFACTURER'S IDENTIFICATION _____
MFR'S No. AND/OR LETTER DESIGNATION FOR GLAND USED

ELASTOMERIC BEARING PADS

PAD MANUFACTURER _____
NAME AND ADDRESS (CITY, STATE)

SPECIAL SURFACE FINISH

SYSTEM: _____ COLOR: _____

FINISHING ROADWAY FACES OF BARRIER RAILING

TYPE: _____ COLOR: _____

ANTI-GRAFFITI COATING

MANUFACTURER _____
NAME AND ADDRESS (CITY, STATE)

PRODUCT NAME: _____ LOCATION: _____

PAINT SYSTEM

Mn/DOT SPECIFICATION NUMBER _____
2478 OR 2479 OR OTHER

MANUFACTURER _____
NAME AND ADDRESS (CITY, STATE)

PRIME COAT _____
Mn/DOT MATERIAL SPECIFICATION NUMBER

INTERMEDIATE COAT _____
Mn/DOT MATERIAL SPECIFICATION NUMBER

FINISH COAT _____ _____
Mn/DOT MATERIAL SPECIFICATION NUMBER COLOR

PLAN QUALITY

RATE 1 (AGREE), 2 (NEUTRAL), OR 3 (DISAGREE, PLEASE COMMENT BELOW)

DIMENSIONING AND DETAILING ADEQUATELY DESCRIBED REQUIRED CONSTRUCTION. _____
BAR LISTS AND QUANTITIES WERE TYPICALLY COMPLETE AND FREE OF ERRORS. _____
SCALE OF DRAWINGS AND OVERALL LEGIBILITY OF LINES AND TEXT WAS GOOD. _____
(SB) SPECIAL PROVISIONS ADEQUATELY DESCRIBED SPECIAL WORK AND PAYMENT. _____

COMMENTS: _____

NUMBER OF BRIDGE SUPPLEMENTAL AGREEMENTS: _____ COST: $ _____

LIST SIGNIFICANT ERRORS OR OMISSIONS IN PLAN DETAILS OR PAY QUANTITIES IN THE SPACE PROVIDED AT RIGHT.

BRIDGE REMOVAL / BRIDGE OPENING

NUMBER OF AND DATE OLD BRIDGE WAS REMOVED (IF APPLICABLE):

BRIDGE NUMBER _____ DATE REMOVED _____

DATE NEW BRIDGE WAS OPENED TO TRAFFIC _____

NOTIFY THE BRIDGE OFFICE BRIDGE MANAGEMENT UNIT WITH THIS INFORMATION AS SOON AS POSSIBLE. (651) 366-4557

OTHER ITEMS ①

① UTILITIES ADDED DURING CONSTRUCTION AND SPECIALTY ITEMS.

FINAL QUANTITIES ENTERED ON SCHEDULE OF QUANTITIES: YES ☐ NO ☐

SUMMARY OF SIGNIFICANT AS-BUILT CHANGES

THE AS-BUILT INFORMATION WAS ADDED TO THE PLAN BY:

_____ _____
INSPECTOR(S) SIGNATURE DATE

CHECKED BY: _____ _____
PROJECT ENGINEER/SUPERVISOR SIGNATURE DATE

AT THE TIME OF THE FINAL, THIS COMPLETED AS-BUILT BRIDGE DATA SHEET MUST BE SUBMITTED TO THE BRIDGE OFFICE - ATTN: REGIONAL CONSTRUCTION ENGINEER (MS610).

REVISION: 10-28-2008

APPROVED: SEPTEMBER 26, 2003

Daniel L. Dorgan
STATE BRIDGE ENGINEER

AS-BUILT DETAILS
(AS NEEDED)

DRAFT-WORK IN PROCESS

FIG. 5-397.900

TITLE: AS-BUILT BRIDGE DATA

DES: DR: CHK: CHK:

APPROVED:

SHEET NO. 58 OF 68 SHEETS

BRIDGE NO. 27C16

Jan, 14 2016 11:16 am V:\3400_ADC\CAD\SEGMENT E4\PLAN SHEETS\STRUCTURES\27C16\CBR27C16-BRG-DTL-003.dwg By: phil.horton

CONTRACTED PROFILE

SCALE HOR: 0 50'

SCALE VER: 0 10'

PROFILE GRADE
CSAH 40 (GLENWOOD AVE)
(CSAH 40 (GLENWOOD AVE))

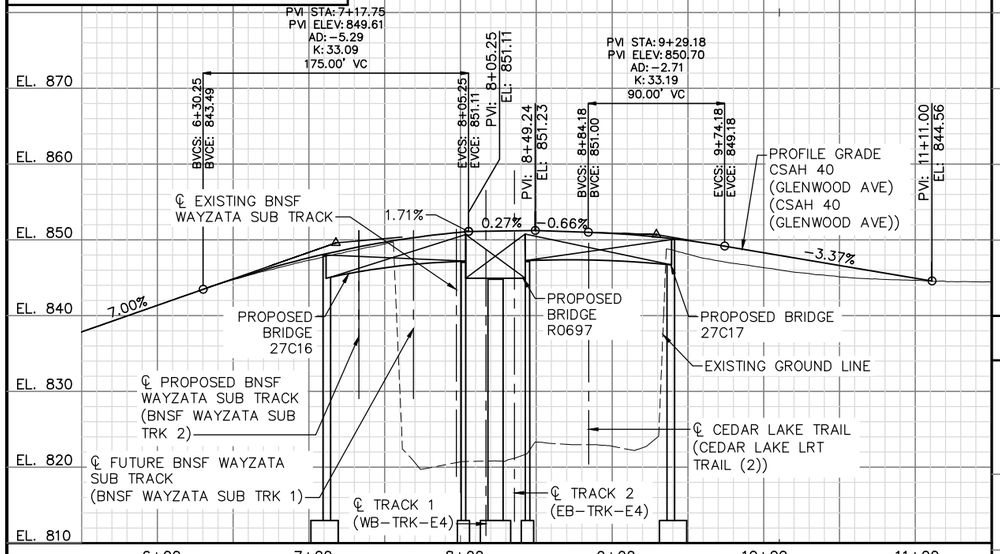

PROFILE GRADE
FUTURE BNSF WAYZATA SUB TRACK
(BNSF WAYZATA SUB TRK 1)

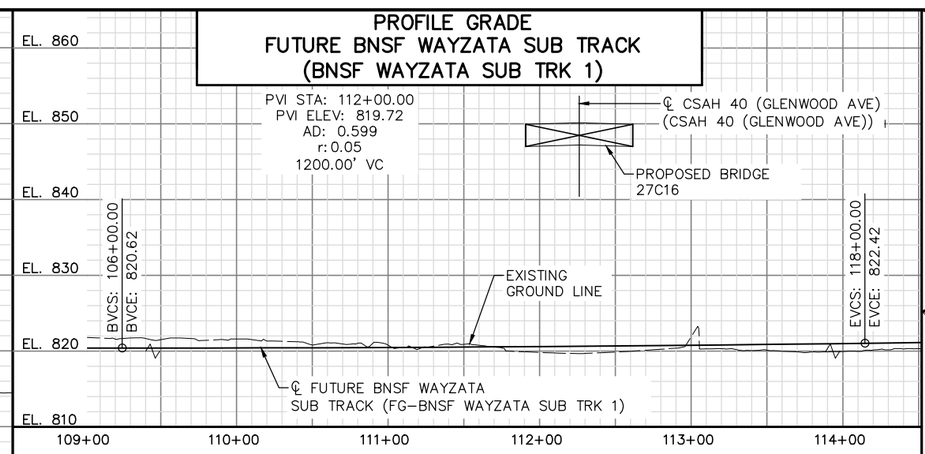

PROFILE GRADE
PROPOSED BNSF WAYZATA SUB TRACK
(BNSF WAYZATA SUB TRK 2 – 23 FT 6 INCH)

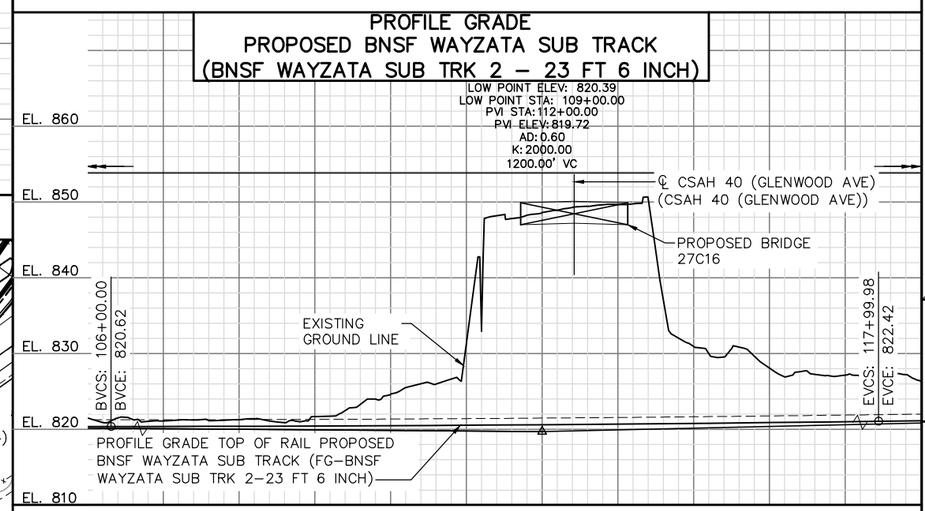

PLAT

SCALE: 0 20' 40'

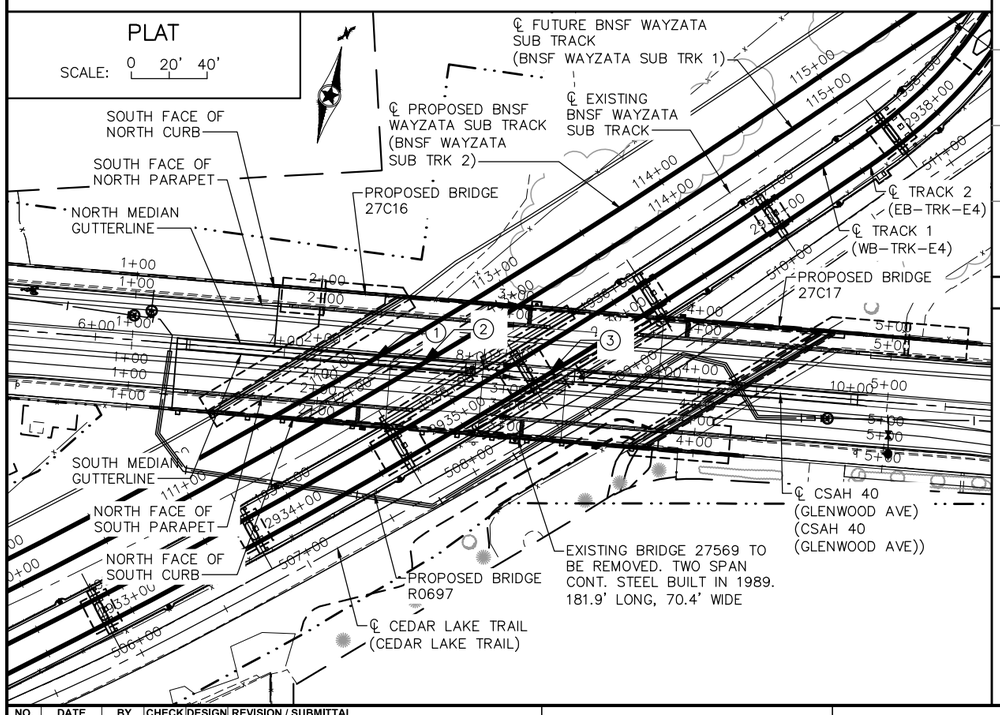

NOTES:

1. ℄ CSAH 40 (GLENWOOD AVE) (CSAH 40 (GLENWOOD AVE)) P.O.C. 7+47.08
   ℄ PROPOSED BNSF WAYZATA SUB TRACK (BNSF WAYZATA SUB TRK 2) P.O.T. 112+21.20
   X = 525722.907 Y = 168541.154
   Δ = 35°02'00.5"
2. ℄ CSAH 40 (GLENWOOD AVE) (CSAH 40 (GLENWOOD AVE)) P.O.T. 7+73.11
   ℄ FUTURE BNSF WAYZATA SUB TRACK (BNSF WAYZATA SUB TRK 1) P.O.C. 112+41.42
   X = 525748.844 Y = 168539.008
   Δ = 35°21'28.2"
3. ℄ CSAH 40 (GLENWOOD AVE) (CSAH 40 (GLENWOOD AVE)) P.O.C. 8+39.83
   ℄ TRACK 2 (EB−TRK−E4) P.O.T. 2935+52.51
   X = 525815.344 Y = 168533.506
   Δ = 36°10'39.1"

INDEX MAP

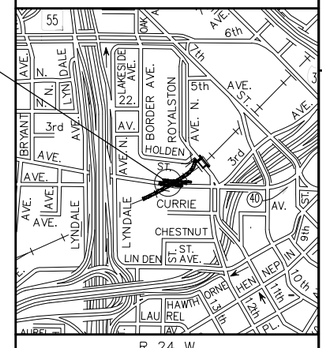

LOCATION ENGINEER'S OBSERVATIONS AT BRIDGE SITE

1. SPECIAL FEATURES: WATERFALLS, DAMS, FLOODS, ICE, DEBRIS SLIDING BANKS, RECREATIONAL BOATING.
2. OTHER BRIDGES OR CULVERTS OVER THE SAME STREAM (PARTICULARY STRUCTURES WHICH CARRY HIGH WATER WITHOUT OVERFLOW OF ROADWAY): GIVEN LOCATION, TYPE, LENGTH, HEIGHT ABOVE HIGH WATER, CROSS−SECTIONAL AREA ETC.
3. APPARENT HIGHWATER ELEVATION OBTAINED FROM:
4. OTHER DATA: APPROX. VELOCITY OF WATER AT TIME OF SURVEY.

HYDRAULIC ENGINEER'S RECOMMENDATION

DATE:

STREAM OR DITCH DESIGNATION:

DRAINAGE AREA: SQ. MI.

MAX FLOOD ON RECORD:

DESIGN FLOOD (YR. FREQ.): C.F.S.
HEADWATER ELEVATION: FT.
DESIGN MEAN VELOCITY THROUGH STRUCTURE F.P.S.
TOTAL STAGE INCREASE FT.
LOW MEMBER AT OR ABOVE ELEVATION FT.

WATERWAY AREA REQUIRED BELOW ELEV. = SQ. FT.
AT RIGHT ANGLES TO CHANNEL

BASIC FLOOD (YR. FREQ.) C.F.S.
HEADWATER ELEVATION: FT.
TOTAL STAGE INCREASE FT.
MEAN VELOCITY THROUGH STRUCTURE F.P.S.

FLOWLINE ELEVATION: FT. SKEW ANGLE:

ESTIMATED PRELIMINARY TOTAL SCOUR AT PIER EL. (500 YR. FREQ.)

SCOUR CONFIRMATION RECOMMENDATION

DATE:

TOTAL SCOUR AT PIER EL. (500 OR OT YR. FREQ.)
SCOUR CODE: OBTAIN FROM HYDRAULIC ENGINEER

BRIDGE SURVEY SHEETS MADE FROM 2014 MFRA SURVEYS

1ST BENCH MARK (NAVD 88)
BENCHMARK ID PT. 163
ELEVATION = 822.94
N = 168527.62, E = 525863.31
DESCRIPTION = MAG NAIL IN BIT. PATH

2ND BENCH MARK (NAVD 88)
BENCHMARK ID PT. 162
ELEVATION = 822.47
N = 168430.42, E = 525688.95
DESCRIPTION = MAG NAIL IN BIT. PATH

BRIDGE SURVEY 1

PROPOSED BRIDGE LOCATED:
0.2 MILES EAST OF JCT. CSAH 40
(GLENWOOD AVENUE) AND INTERSTATE 94

SEC 22 T 29 N R 24 W

CITY OF MINNEAPOLIS HENNEPIN COUNTY

BRIDGE NO. 27C16

NO.	DATE	BY	CHECK	DESIGN	REVISION / SUBMITTAL

DESIGNED BY: KAE CHECKED BY: EJT
DRAWN BY: NAO CHECKED BY: JBW

AECOM Kimley»Horn

90% SUBMISSION - 01/22/16

METROPOLITAN COUNCIL

SOUTHWEST Green Line LRT Extension

CIVIL - VOLUME 4G
CSAH 40 (GLENWOOD AVENUE) - WEST
BRIDGE 27C16
BRIDGE SURVEY 1

DISCIPLINE: STRUCTURES

SHEET NAME: CBR27C16-BRG-SUR-001-1

SHEET 59 OF 68

Jan. 14 2016 11:18 am V:\3400_ADC\CAD\SEGMENT E4\PLAN SHEETS\STRUCTURES\27C16\CBR27C16-BRG-SUR-001.dwg By: phil.horton

CONTRACTED PROFILE

SCALE HOR: 0 50'

SCALE VER: 0 10'

PROFILE GRADE @ SOUTH FACE OF NORTH CURB

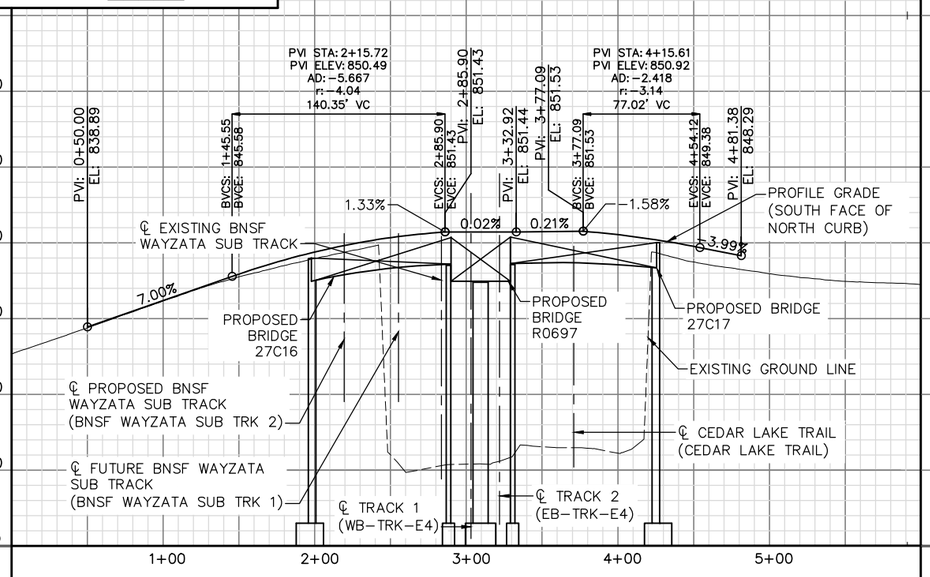

PROFILE GRADE @ SOUTH FACE OF NORTH PARAPET

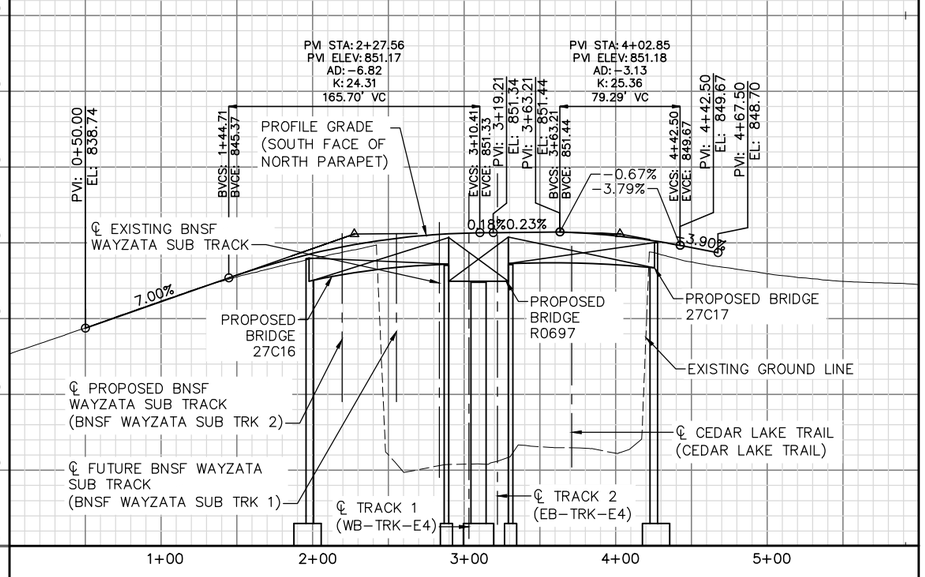

PROFILE GRADE @ NORTH MEDIAN GUTTERLINE

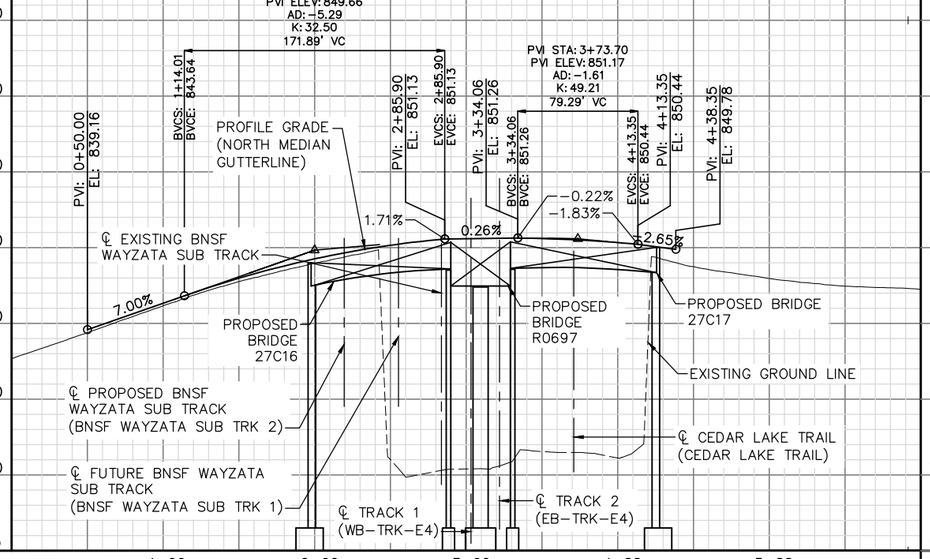

PROFILE GRADE ℄ CEDAR LAKE TRAIL (CEDAR LAKE TRAIL)

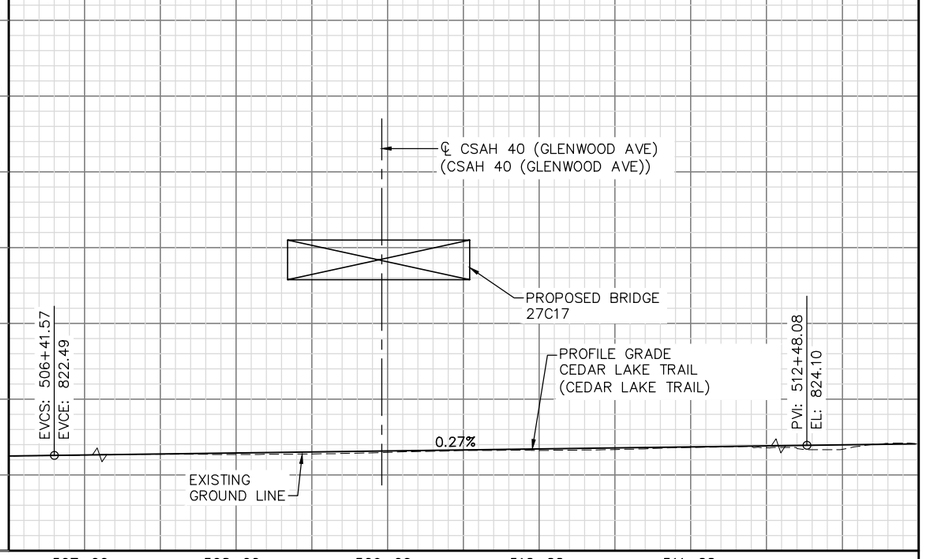

NOTES:

℄ CSAH 40 (GLENWOOD AVE) (CSAH 40 (GLENWOOD AVE) STA. 5+69.35 = SOUTH FACE OF NORTH CURB STA. 0+50.00.

℄ CSAH 40 (GLENWOOD AVE) (CSAH 40 (GLENWOOD AVE)) STA. 5+69.35 = SOUTH FACE OF NORTH BARRIER STA. 0+50.00.

℄ CSAH 40 (GLENWOOD AVE) (CSAH 40 (GLENWOOD AVE)) STA. 5+69.35 = NORTH MEDIAN GUTTERLINE STA. 0+50.00.

NO.	DATE	BY	CHECK	DESIGN	REVISION / SUBMITTAL

DESIGNED BY: KAE | CHECKED BY: EJT

DRAWN BY: NAO | CHECKED BY: JBW

AECOM Kimley»Horn

90% SUBMISSION - 01/22/16

METROPOLITAN COUNCIL

SOUTHWEST Green Line LRT Extension

CIVIL - VOLUME 4G
CSAH 40 (GLENWOOD AVENUE) - WEST
BRIDGE 27C16
BRIDGE SURVEY 2

DISCIPLINE: STRUCTURES

SHEET NAME: CBR27C16-BRG-SUR-001-2

SHEET 60 OF 68

Jan, 14 2016 11:18 am V:\3400_ADC\CAD\SEGMENT E4\PLAN SHEETS\STRUCTURES\27C16\CBR27C16-BRG-SUR-001.dwg By: phil.horton

CONTRACTED PROFILE

SCALE HOR: 0 50'

SCALE VER: 0 10'

PROFILE GRADE @ NORTH FACE OF SOUTH CURB

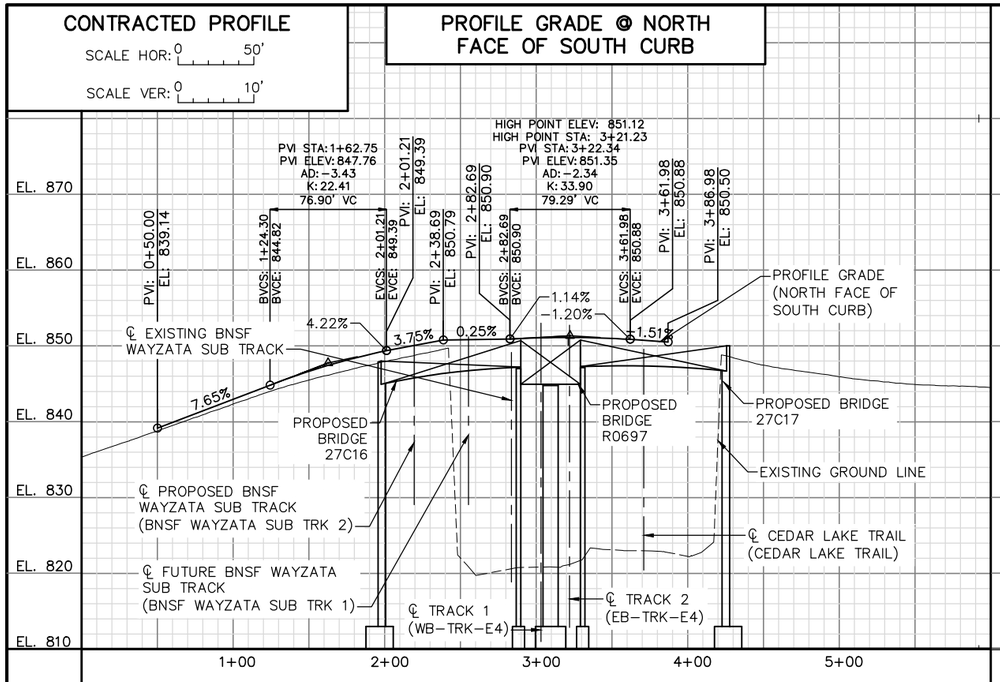

PROFILE GRADE @ NORTH FACE OF SOUTH PARAPET

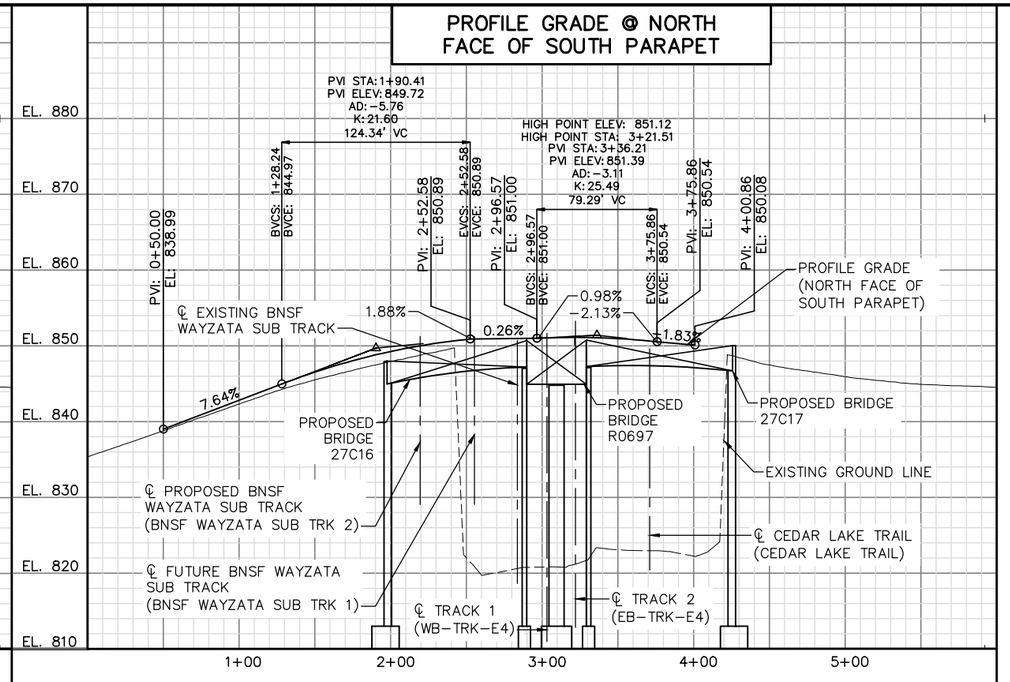

PROFILE GRADE @ SOUTH MEDIAN GUTTERLINE

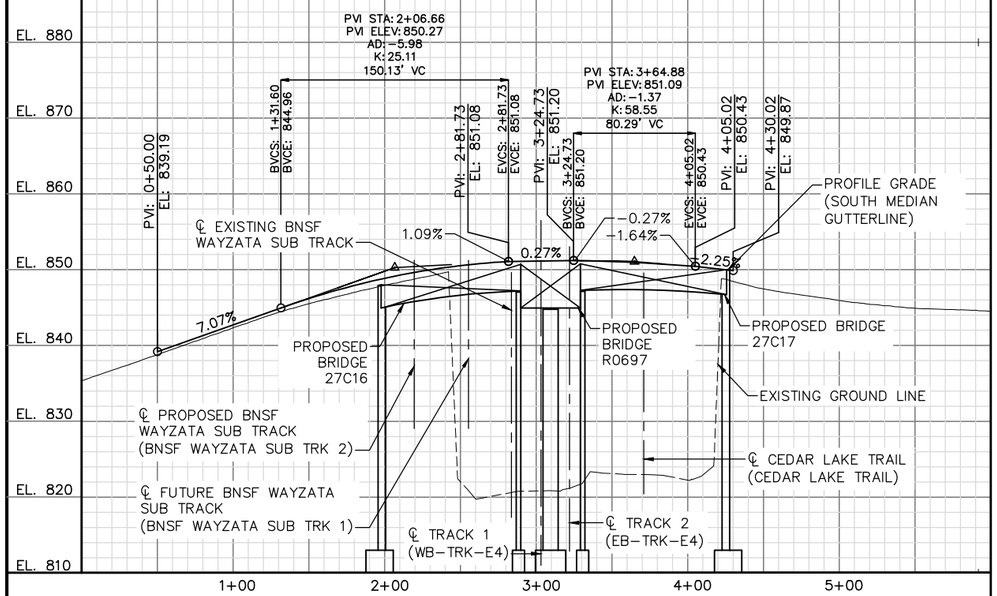

NOTES:

℄ CSAH 40 (GLENWOOD AVE) (CSAH 40 (GLENWOOD AVE)) STA. 5+69.35 = NORTH FACE OF SOUTH CURB STA. 0+50.00

℄ CSAH 40 (GLENWOOD AVE) (CSAH 40 (GLENWOOD AVE)) STA. 5+69.35 = NORTH FACE OF SOUTH BARRIER STA. 0+50.00.

℄ CSAH 40 (GLENWOOD AVE) (CSAH 40 (GLENWOOD AVE)) STA. 5+69.35 = SOUTH MEDIAN GUTTERLINE STA. 0+50.00

① THE ELEVATION OF THE EXISTING AND PROPOSED TOP-OF-RAIL PROFILE SHALL BE VERIFIED BEFORE BEGINNING CONSTRUCTION

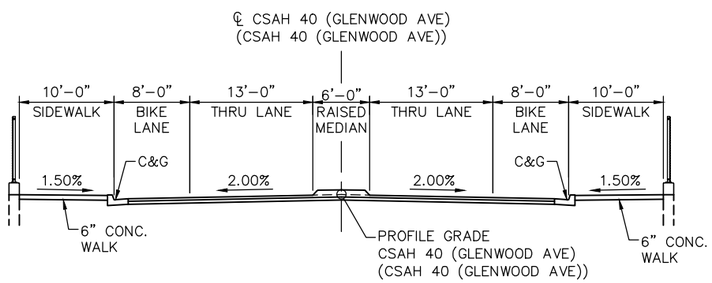

PROPOSED TYPICAL GLENWOOD AVENUE SECTION

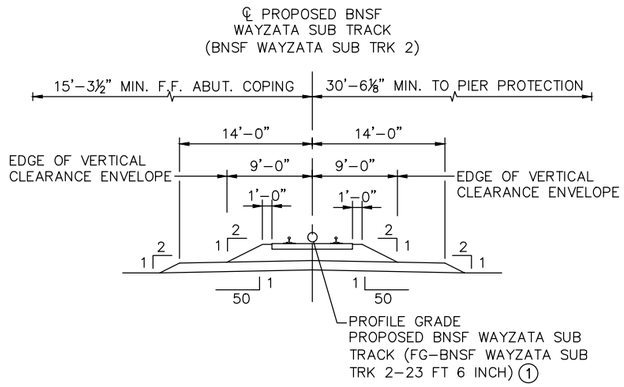

TYPICAL BNSF SECTION

NO.	DATE	BY	CHECK	DESIGN	REVISION / SUBMITTAL

DESIGNED BY: KAE CHECKED BY: EJT

DRAWN BY: NAO CHECKED BY: JBW

AECOM Kimley»Horn

90% SUBMISSION - 01/22/16

METROPOLITAN COUNCIL

SOUTHWEST Green Line LRT Extension

CIVIL - VOLUME 4G
CSAH 40 (GLENWOOD AVENUE) - WEST
BRIDGE 27C16
BRIDGE SURVEY 3

DISCIPLINE: STRUCTURES

SHEET NAME: CBR27C16-BRG-SUR-001-3

SHEET 61 OF 68

Jan, 14 2016 11:18 am V:\3400_ADC\CAD\SEGMENT E4\PLAN SHEETS\STRUCTURES\27C16\CBR27C16-BRG-SUR-001.dwg By: phil.horton

℄ CSAH 40 (GLENWOOD AVE)
(CSAH 40 (GLENWOOD AVE))

1158 SB
STA. 6+93.69
21' RT. OF ℄ CSAH 40
(GLENWOOD AVE)

℄ BRG. W. ABUT.

℄ BRG. & ℄ W. PIER

TEST PILE NO. 1

TEST PILE NO. 2

TEST PILE NO. 3

TEST PILE NO. 4

TEST PILE NO. 5

TEST PILE NO. 6

℄ TRACK 1
(WB-TRK-E4)

℄ TRACK 2
(EB-TRK-E4)

1021 SB
STA. 9+92.18
22' LT. OF ℄ CSAH 40
(GLENWOOD AVE)

1159 SB
STA. 9+41.50
21' RT. OF ℄ CSAH 40
(GLENWOOD AVE)

1136 SW
STA. 7+10.43
78' RT. OF ℄ CSAH 40
(GLENWOOD AVE)

℄ PROPOSED BNSF
WAYZATA SUB TRACK
(BNSF WAYZATA SUB TRK 2)

℄ FUTURE BNSF
WAYZATA SUB TRACK
(BNSF WAYZATA SUB TRK 1)

℄ EXISTING BNSF
WAYZATA SUB TRACK

℄ CEDAR LAKE TRAIL
(CEDAR LAKE TRAIL)

NOTES:

WATER MAIN TO BE RELOCATED AS SHOWN, CONTRACTOR TO FIELD LOCATE BURIED UTILITIES PRIOR TO CONSTRUCTION.

SEE SHEET 65 FOR UTILITY NOTES.

THE SUBSURFACE UTILITY INFORMATION IN THIS PLAN IS UTILITY QUALITY LEVEL D. THIS UTILITY QUALITY LEVEL WAS DETERMINED ACCORDING TO THE GUIDELINES OF CI/ASCE 38-02, ENTITLED "STANDARD GUIDELINES FOR THE COLLECTION AND DEPICTION OF EXISTING SUBSURFACE UTILITY DATA."

SEE SHEET 65 FOR UTILITY NOTES.

NO.	DATE	BY	CHECK	DESIGN	REVISION / SUBMITTAL

DESIGNED BY: KAE | CHECKED BY: EJT
DRAWN BY: NAO | CHECKED BY: JBW

AECOM Kimley»Horn

90% SUBMISSION - 01/22/16

METROPOLITAN COUNCIL

SOUTHWEST Green Line LRT Extension

CIVIL - VOLUME 4G
CSAH 40 (GLENWOOD AVENUE) - WEST
BRIDGE 27C16
BRIDGE SURVEY PLAN

DISCIPLINE: STRUCTURES

SHEET NAME: CBR27C16-BRG-BOR-001

SHEET 62 OF 68

Jan, 14 2016 11:20 am V:\3400_ADC\CAD\SEGMENT E4\PLAN SHEETS\STRUCTURES\27C16\CBR27C16-BRG-BOR-001.dwg By: phil.horton

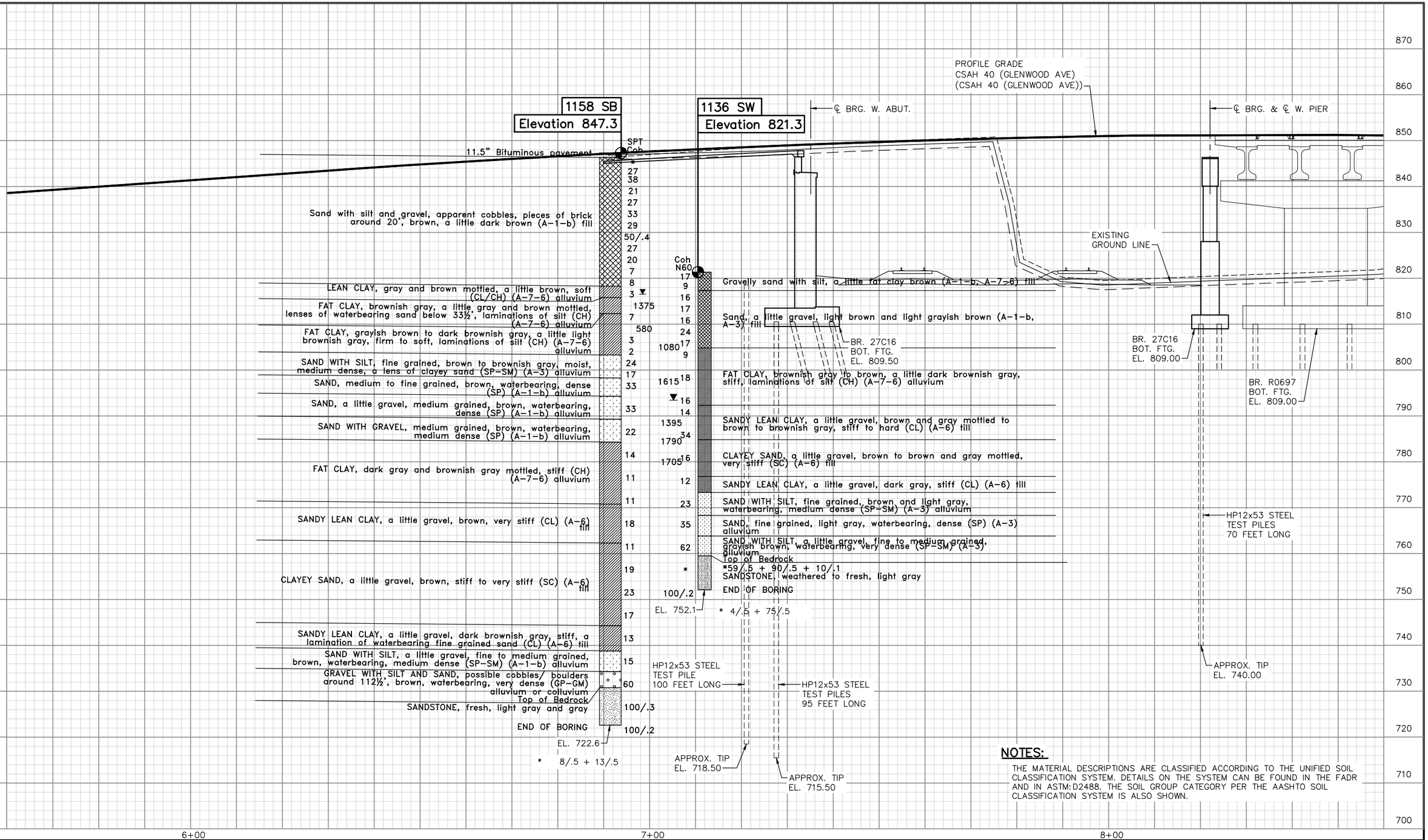

NOTES:

THE MATERIAL DESCRIPTIONS ARE CLASSIFIED ACCORDING TO THE UNIFIED SOIL CLASSIFICATION SYSTEM. DETAILS ON THE SYSTEM CAN BE FOUND IN THE FADR AND IN ASTM:D2488. THE SOIL GROUP CATEGORY PER THE AASHTO SOIL CLASSIFICATION SYSTEM IS ALSO SHOWN.

NO.	DATE	BY	CHECK	DESIGN	REVISION / SUBMITTAL

DESIGNED BY: KAE CHECKED BY: EJT
DRAWN BY: NAO CHECKED BY: JBW

AECOM Kimley»Horn

90% SUBMISSION - 01/22/16

METROPOLITAN COUNCIL

SOUTHWEST Green Line LRT Extension

CIVIL - VOLUME 4G
CSAH 40 (GLENWOOD AVENUE) - WEST
BRIDGE 27C16
BRIDGE SURVEY PROFILE 1

DISCIPLINE: STRUCTURES

SHEET NAME: CBR27C16-BRG-BOR-002-1

SHEET 63 OF 68

Jan, 14 2016 11:21 am V:\3400_ADC\CAD\SEGMENT E4\PLAN SHEETS\STRUCTURES\27C16\CBR27C16-BRG-BOR-002.dwg By: phil.horton

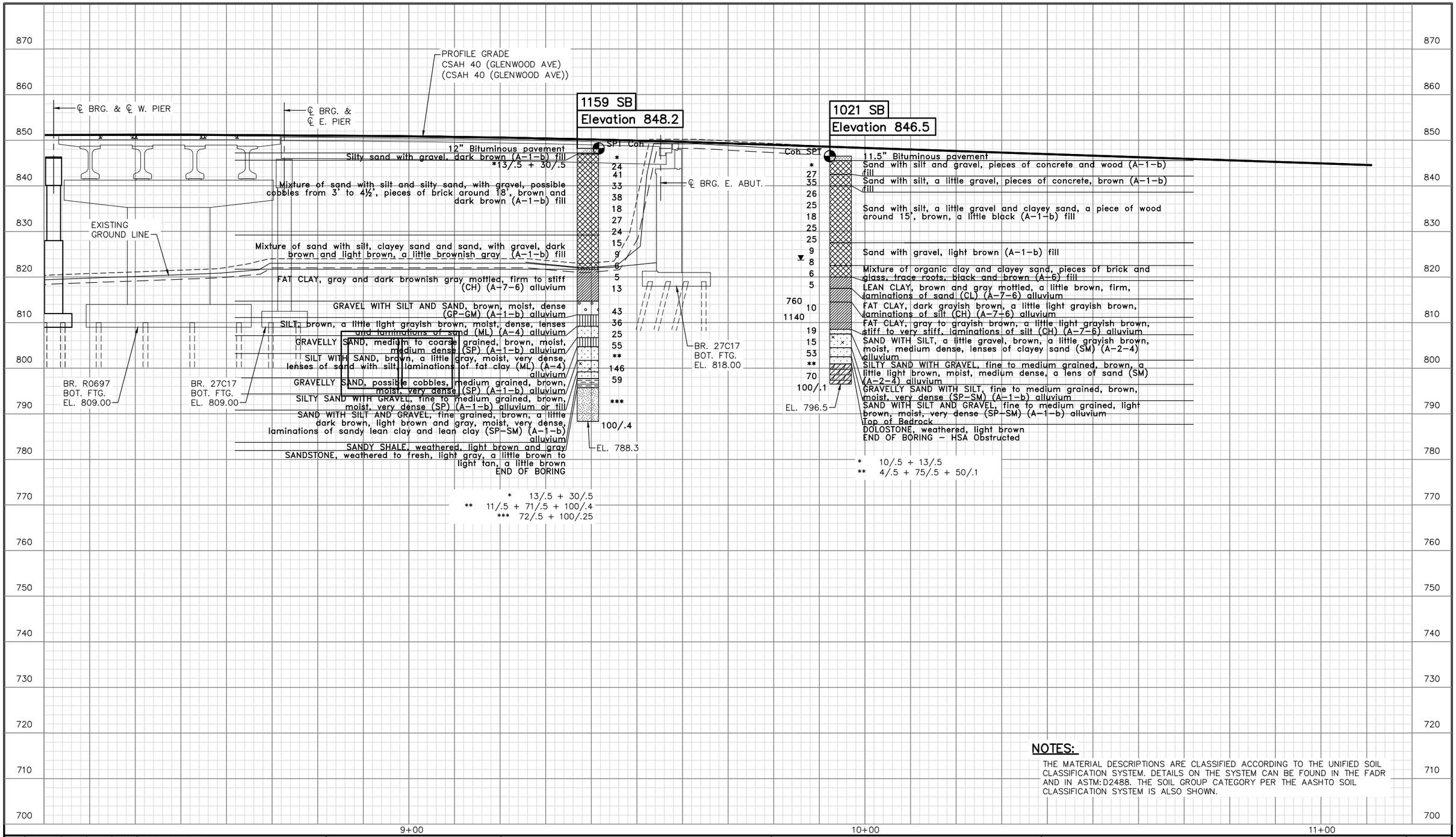

NOTES:

THE MATERIAL DESCRIPTIONS ARE CLASSIFIED ACCORDING TO THE UNIFIED SOIL CLASSIFICATION SYSTEM. DETAILS ON THE SYSTEM CAN BE FOUND IN THE FADR AND IN ASTM:D2488. THE SOIL GROUP CATEGORY PER THE AASHTO SOIL CLASSIFICATION SYSTEM IS ALSO SHOWN.

NO.	DATE	BY	CHECK	DESIGN	REVISION / SUBMITTAL

DESIGNED BY: KAE | CHECKED BY: EJT
DRAWN BY: NAO | CHECKED BY: JBW

AECOM Kimley»Horn

90% SUBMISSION - 01/22/16

METROPOLITAN COUNCIL

SOUTHWEST Green Line LRT Extension

CIVIL - VOLUME 4G
CSAH 40 (GLENWOOD AVENUE) - WEST
BRIDGE 27C16
BRIDGE SURVEY PROFILE 2

DISCIPLINE: STRUCTURES

SHEET NAME: CBR27C16-BRG-BOR-002-2

SHEET 64 OF 68

Jan. 14 2016 11:21 am V:\3400_ADC\CAD\SEGMENT E4\PLAN SHEETS\STRUCTURES\27C16\CBR27C16-BRG-BOR-002.dwg By: phil.horton

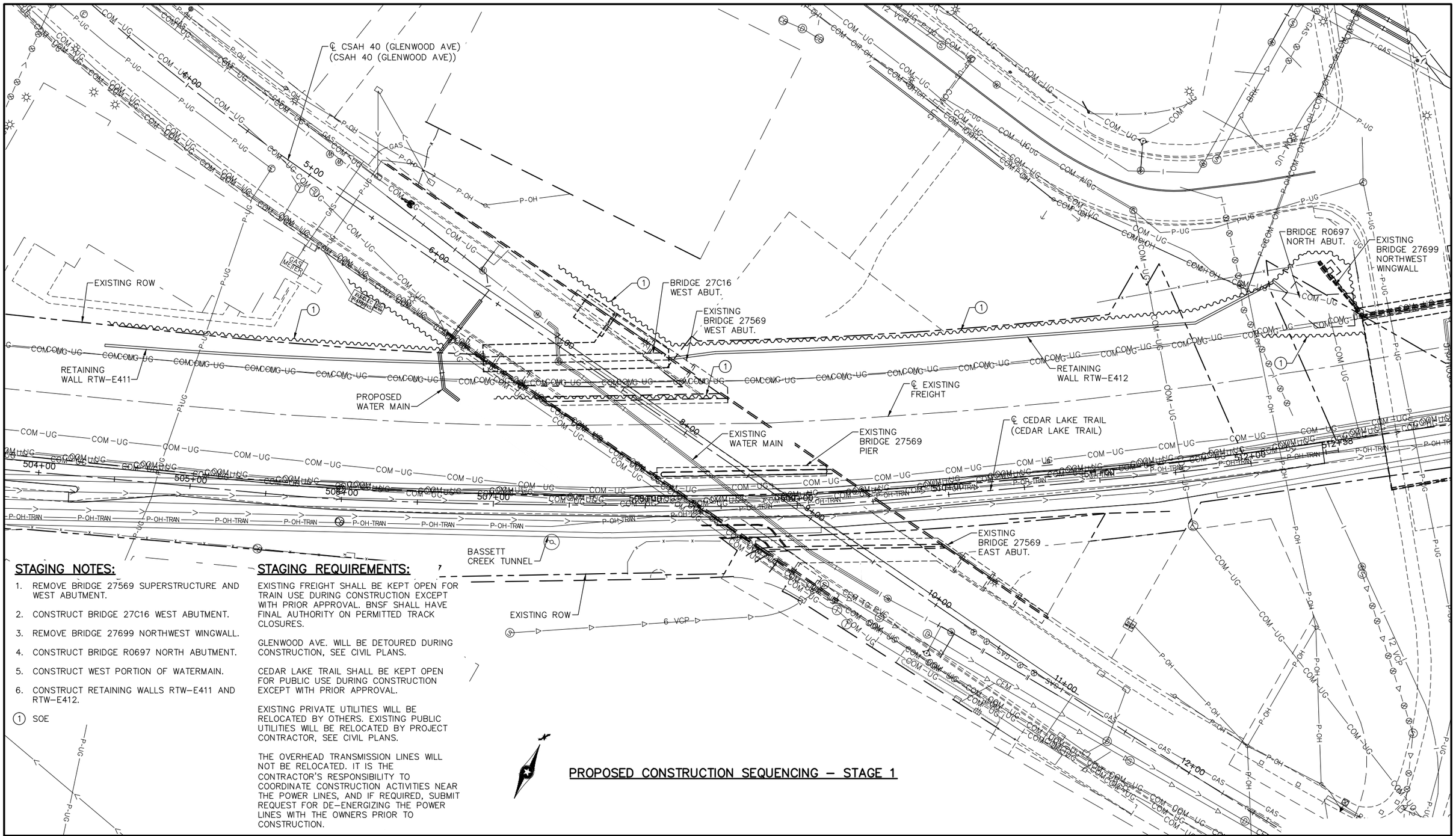

STAGING NOTES:

1. REMOVE BRIDGE 27569 SUPERSTRUCTURE AND WEST ABUTMENT.
2. CONSTRUCT BRIDGE 27C16 WEST ABUTMENT.
3. REMOVE BRIDGE 27699 NORTHWEST WINGWALL.
4. CONSTRUCT BRIDGE R0697 NORTH ABUTMENT.
5. CONSTRUCT WEST PORTION OF WATERMAIN.
6. CONSTRUCT RETAINING WALLS RTW–E411 AND RTW–E412.

(1) SOE

STAGING REQUIREMENTS:

EXISTING FREIGHT SHALL BE KEPT OPEN FOR TRAIN USE DURING CONSTRUCTION EXCEPT WITH PRIOR APPROVAL. BNSF SHALL HAVE FINAL AUTHORITY ON PERMITTED TRACK CLOSURES.

GLENWOOD AVE. WILL BE DETOURED DURING CONSTRUCTION, SEE CIVIL PLANS.

CEDAR LAKE TRAIL SHALL BE KEPT OPEN FOR PUBLIC USE DURING CONSTRUCTION EXCEPT WITH PRIOR APPROVAL.

EXISTING PRIVATE UTILITIES WILL BE RELOCATED BY OTHERS. EXISTING PUBLIC UTILITIES WILL BE RELOCATED BY PROJECT CONTRACTOR, SEE CIVIL PLANS.

THE OVERHEAD TRANSMISSION LINES WILL NOT BE RELOCATED. IT IS THE CONTRACTOR'S RESPONSIBILITY TO COORDINATE CONSTRUCTION ACTIVITIES NEAR THE POWER LINES, AND IF REQUIRED, SUBMIT REQUEST FOR DE–ENERGIZING THE POWER LINES WITH THE OWNERS PRIOR TO CONSTRUCTION.

PROPOSED CONSTRUCTION SEQUENCING – STAGE 1

NO.	DATE	BY	CHECK	DESIGN	REVISION / SUBMITTAL

DESIGNED BY: KAE | CHECKED BY: EJT
DRAWN BY: LMT | CHECKED BY: JBW

AECOM Kimley»Horn

90% SUBMISSION - 01/22/16

METROPOLITAN COUNCIL

SOUTHWEST Green Line LRT Extension

CIVIL - VOLUME 4G
CSAH 40 (GLENWOOD AVENUE) - WEST
BRIDGE 27C16
STAGING PLAN 1

DISCIPLINE: STRUCTURES

SHEET NAME: CBR27C16-BRG-STG-001 -1

SHEET 65 OF 68

Jan, 14 2016 11:22 am V:\3400_ADC\CAD\SEGMENT E4\PLAN SHEETS\STRUCTURES\27C16\CBR27C16-BRG-STG-001.dwg By: phil.horton

℄ CSAH 40 (GLENWOOD AVE)
(CSAH 40 (GLENWOOD AVE))

℄ PROPOSED BNSF
WAYZATA SUB TRACK
(BNSF WAYZATA SUB TRK 2)

RETAINING
WALL RTW–E411

RETAINING
WALL RTW–E405

RETAINING
WALL RTW–E407

RETAINING
WALL RTW–E412

EXISTING ROW

BRIDGE R0697
SOUTH ABUT.

BRIDGE R0697
PIER 1

BRIDGE R0697
PIER 2

BRIDGE R0697
PIER 3

BRIDGE R0697
PIER 4

BRIDGE R0697
PIER 5

BRIDGE R0697
PIER 6

BRIDGE R0697
PIER 7

BRIDGE R0697
PIER 8

BRIDGE R0697
PIER 9

BRIDGE R0697
NORTH ABUT.

EXISTING
BRIDGE 27699

BRIDGE 27C16
WEST ABUT.

BRIDGE 27C16
WEST PIER

BRIDGE 27C17
EAST PIER

BRIDGE 27C17
EAST ABUT.

BASSETT
CREEK TUNNEL

PROPOSED
WATER MAIN

℄ CEDAR LAKE TRAIL
(CEDAR LAKE TRAIL)

109+00 110+00 111+00 112+00 113+00 114+00 115+00 116+00 117+00
5+00 6+00 10+00 11+00 12+00
504+00 505+00 506+00 507+00 508+00 509+00 510+00 511+00 512+00 512+38

STAGING NOTES:

1. RELOCATE EXISTING BNSF TRACK TO FINAL ALIGNMENT.
2. REMOVE BRIDGE 27569 REMAINING SUBSTRUCTURES.
3. CONSTRUCT BRIDGE R0697 SOUTH ABUTMENT AND PIERS 1–9.
4. CONSTRUCT BRIDGE 27C16 AND BRIDGE 27C17 PIERS AND BRIDGE 27C17 EAST ABUTMENT.
5. CONSTRUCT REMAINING PORTION OF WATER MAIN.
6. CONSTRUCT RETAINING WALLS RTW–E405 AND RTW–E407.

(1) SOE

STAGING REQUIREMENTS:

EXISTING FREIGHT SHALL BE KEPT OPEN FOR TRAIN USE DURING CONSTRUCTION EXCEPT WITH PRIOR APPROVAL. BNSF SHALL HAVE FINAL AUTHORITY ON PERMITTED TRACK CLOSURES.

GLENWOOD AVE. WILL BE DETOURED DURING CONSTRUCTION, SEE CIVIL PLANS.

CEDAR LAKE TRAIL SHALL BE KEPT OPEN FOR PUBLIC USE DURING CONSTRUCTION EXCEPT WITH PRIOR APPROVAL.

EXISTING PRIVATE UTILITIES WILL BE RELOCATED BY OTHERS. EXISTING PUBLIC UTILITIES WILL BE RELOCATED BY PROJECT CONTRACTOR, SEE CIVIL PLANS.

THE OVERHEAD TRANSMISSION LINES WILL NOT BE RELOCATED. IT IS THE CONTRACTOR'S RESPONSIBILITY TO COORDINATE CONSTRUCTION ACTIVITIES NEAR THE POWER LINES, AND IF REQUIRED, SUBMIT REQUEST FOR DE–ENERGIZING THE POWER LINES WITH THE OWNERS PRIOR TO CONSTRUCTION.

PROPOSED CONSTRUCTION SEQUENCING – STAGE 2

NO.	DATE	BY	CHECK	DESIGN	REVISION / SUBMITTAL

DESIGNED BY: KAE | CHECKED BY: EJT
DRAWN BY: LMT | CHECKED BY: JBW

AECOM Kimley»Horn

90% SUBMISSION - 01/22/16

METROPOLITAN COUNCIL

SOUTHWEST Green Line LRT Extension

CIVIL - VOLUME 4G
CSAH 40 (GLENWOOD AVENUE) - WEST
BRIDGE 27C16
STAGING PLAN 2

DISCIPLINE: STRUCTURES

SHEET NAME: CBR27C16-BRG-STG-001-2

SHEET 66 OF 68

Jan, 14 2016 11:22 am V:\3400_ADC\CAD\SEGMENT E4\PLAN SHEETS\STRUCTURES\27C16\CBR27C16-BRG-STG-001.dwg By: phil.horton

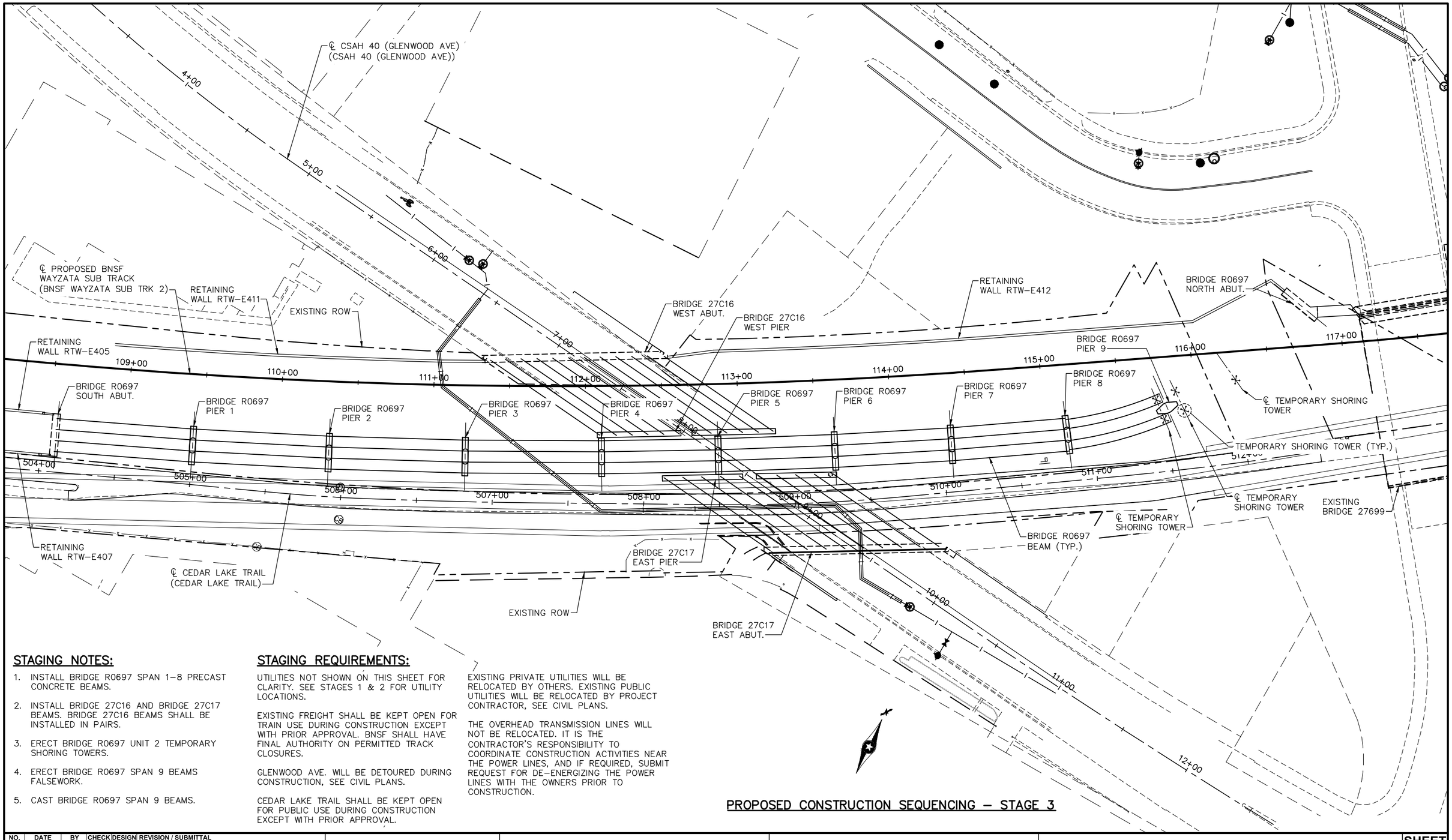

STAGING NOTES:

1. INSTALL BRIDGE R0697 SPAN 1–8 PRECAST CONCRETE BEAMS.
2. INSTALL BRIDGE 27C16 AND BRIDGE 27C17 BEAMS. BRIDGE 27C16 BEAMS SHALL BE INSTALLED IN PAIRS.
3. ERECT BRIDGE R0697 UNIT 2 TEMPORARY SHORING TOWERS.
4. ERECT BRIDGE R0697 SPAN 9 BEAMS FALSEWORK.
5. CAST BRIDGE R0697 SPAN 9 BEAMS.

STAGING REQUIREMENTS:

UTILITIES NOT SHOWN ON THIS SHEET FOR CLARITY. SEE STAGES 1 & 2 FOR UTILITY LOCATIONS.

EXISTING FREIGHT SHALL BE KEPT OPEN FOR TRAIN USE DURING CONSTRUCTION EXCEPT WITH PRIOR APPROVAL. BNSF SHALL HAVE FINAL AUTHORITY ON PERMITTED TRACK CLOSURES.

GLENWOOD AVE. WILL BE DETOURED DURING CONSTRUCTION, SEE CIVIL PLANS.

CEDAR LAKE TRAIL SHALL BE KEPT OPEN FOR PUBLIC USE DURING CONSTRUCTION EXCEPT WITH PRIOR APPROVAL.

EXISTING PRIVATE UTILITIES WILL BE RELOCATED BY OTHERS. EXISTING PUBLIC UTILITIES WILL BE RELOCATED BY PROJECT CONTRACTOR, SEE CIVIL PLANS.

THE OVERHEAD TRANSMISSION LINES WILL NOT BE RELOCATED. IT IS THE CONTRACTOR'S RESPONSIBILITY TO COORDINATE CONSTRUCTION ACTIVITIES NEAR THE POWER LINES, AND IF REQUIRED, SUBMIT REQUEST FOR DE–ENERGIZING THE POWER LINES WITH THE OWNERS PRIOR TO CONSTRUCTION.

PROPOSED CONSTRUCTION SEQUENCING – STAGE 3

NO.	DATE	BY	CHECK	DESIGN	REVISION / SUBMITTAL

DESIGNED BY: KAE | CHECKED BY: EJT
DRAWN BY: LMT | CHECKED BY: JBW

AECOM Kimley»Horn

90% SUBMISSION - 01/22/16

METROPOLITAN COUNCIL

SOUTHWEST Green Line LRT Extension

CIVIL - VOLUME 4G
CSAH 40 (GLENWOOD AVENUE) - WEST
BRIDGE 27C16
STAGING PLAN 3

DISCIPLINE: STRUCTURES

SHEET NAME: CBR27C16-BRG-STG-001-3

SHEET 67 OF 68

Jan, 14 2016 11:23 am V:\3400_ADC\CAD\SEGMENT E4\PLAN SHEETS\STRUCTURES\27C16\CBR27C16-BRG-STG-001.dwg By: phil.horton

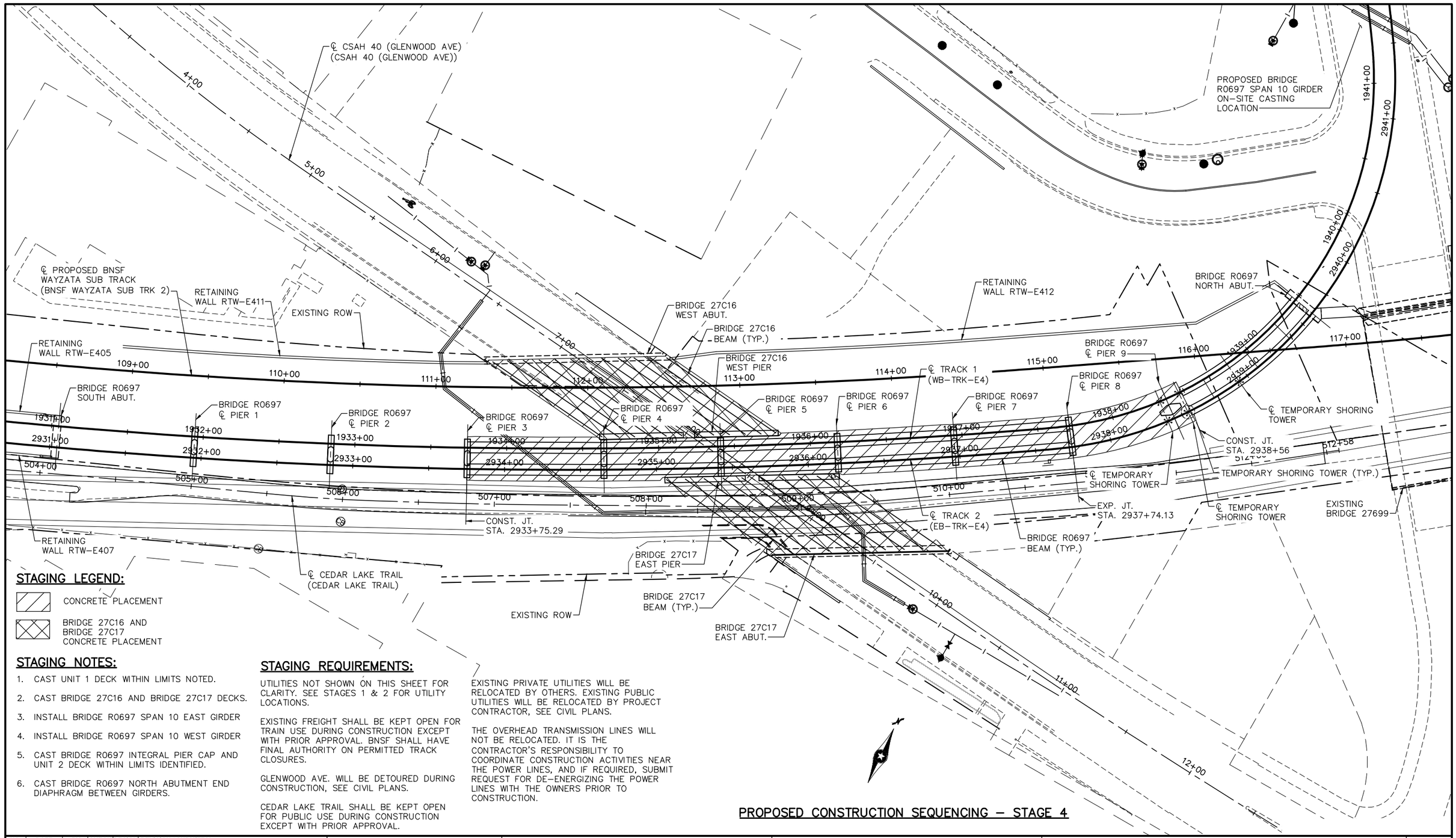

STAGING LEGEND:

CONCRETE PLACEMENT

BRIDGE 27C16 AND BRIDGE 27C17 CONCRETE PLACEMENT

STAGING NOTES:

1. CAST UNIT 1 DECK WITHIN LIMITS NOTED.
2. CAST BRIDGE 27C16 AND BRIDGE 27C17 DECKS.
3. INSTALL BRIDGE R0697 SPAN 10 EAST GIRDER
4. INSTALL BRIDGE R0697 SPAN 10 WEST GIRDER
5. CAST BRIDGE R0697 INTEGRAL PIER CAP AND UNIT 2 DECK WITHIN LIMITS IDENTIFIED.
6. CAST BRIDGE R0697 NORTH ABUTMENT END DIAPHRAGM BETWEEN GIRDERS.

STAGING REQUIREMENTS:

UTILITIES NOT SHOWN ON THIS SHEET FOR CLARITY. SEE STAGES 1 & 2 FOR UTILITY LOCATIONS.

EXISTING FREIGHT SHALL BE KEPT OPEN FOR TRAIN USE DURING CONSTRUCTION EXCEPT WITH PRIOR APPROVAL. BNSF SHALL HAVE FINAL AUTHORITY ON PERMITTED TRACK CLOSURES.

GLENWOOD AVE. WILL BE DETOURED DURING CONSTRUCTION, SEE CIVIL PLANS.

CEDAR LAKE TRAIL SHALL BE KEPT OPEN FOR PUBLIC USE DURING CONSTRUCTION EXCEPT WITH PRIOR APPROVAL.

EXISTING PRIVATE UTILITIES WILL BE RELOCATED BY OTHERS. EXISTING PUBLIC UTILITIES WILL BE RELOCATED BY PROJECT CONTRACTOR, SEE CIVIL PLANS.

THE OVERHEAD TRANSMISSION LINES WILL NOT BE RELOCATED. IT IS THE CONTRACTOR'S RESPONSIBILITY TO COORDINATE CONSTRUCTION ACTIVITIES NEAR THE POWER LINES, AND IF REQUIRED, SUBMIT REQUEST FOR DE-ENERGIZING THE POWER LINES WITH THE OWNERS PRIOR TO CONSTRUCTION.

PROPOSED CONSTRUCTION SEQUENCING – STAGE 4

NO.	DATE	BY	CHECK	DESIGN	REVISION / SUBMITTAL

DESIGNED BY: KAE | CHECKED BY: EJT
DRAWN BY: LMT | CHECKED BY: JBW

AECOM Kimley»Horn

90% SUBMISSION - 01/22/16

METROPOLITAN COUNCIL

SOUTHWEST Green Line LRT Extension

CIVIL - VOLUME 4G
CSAH 40 (GLENWOOD AVENUE) - WEST
BRIDGE 27C16
STAGING PLAN 4

DISCIPLINE: STRUCTURES

SHEET NAME: CBR27C16-BRG-STG-001-4

SHEET 68 OF 68

Jan, 14 2016 11:23 am V:\3400_ADC\CAD\SEGMENT E4\PLAN SHEETS\STRUCTURES\27C16\CBR27C16-BRG-STG-001.dwg By: phil.horton

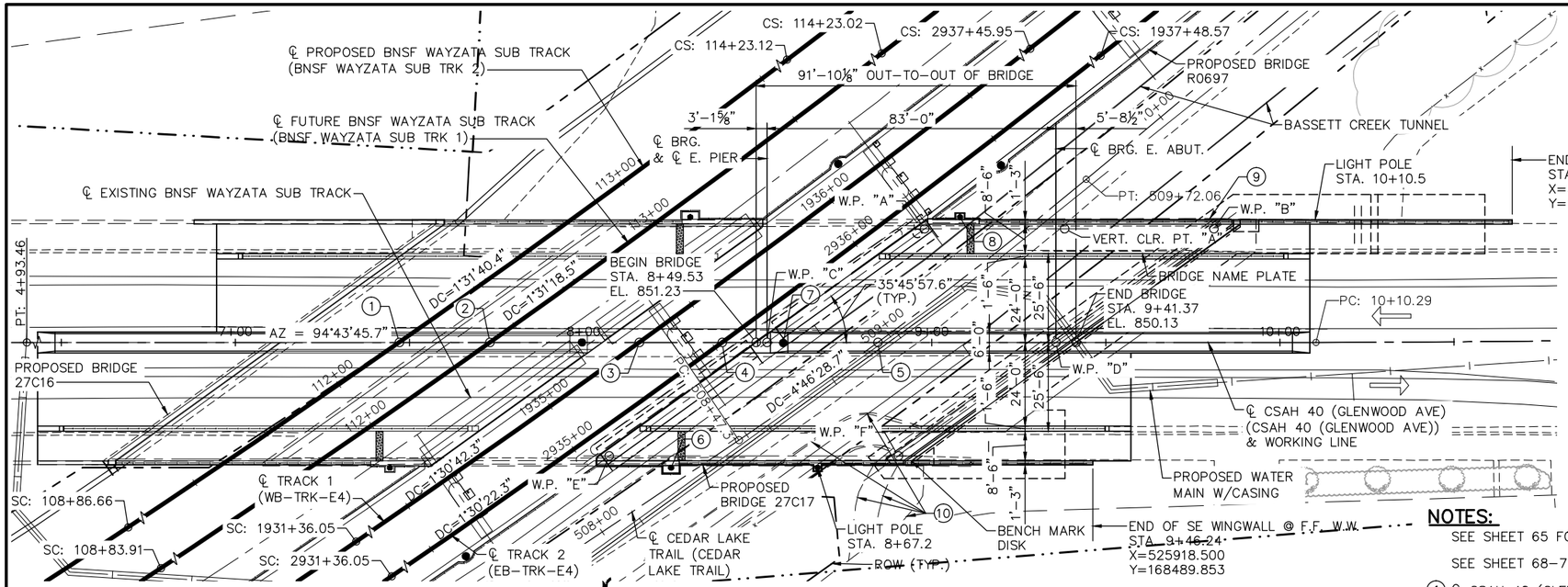

GENERAL PLAN

0 10' 20' 40'
SCALE IN FEET

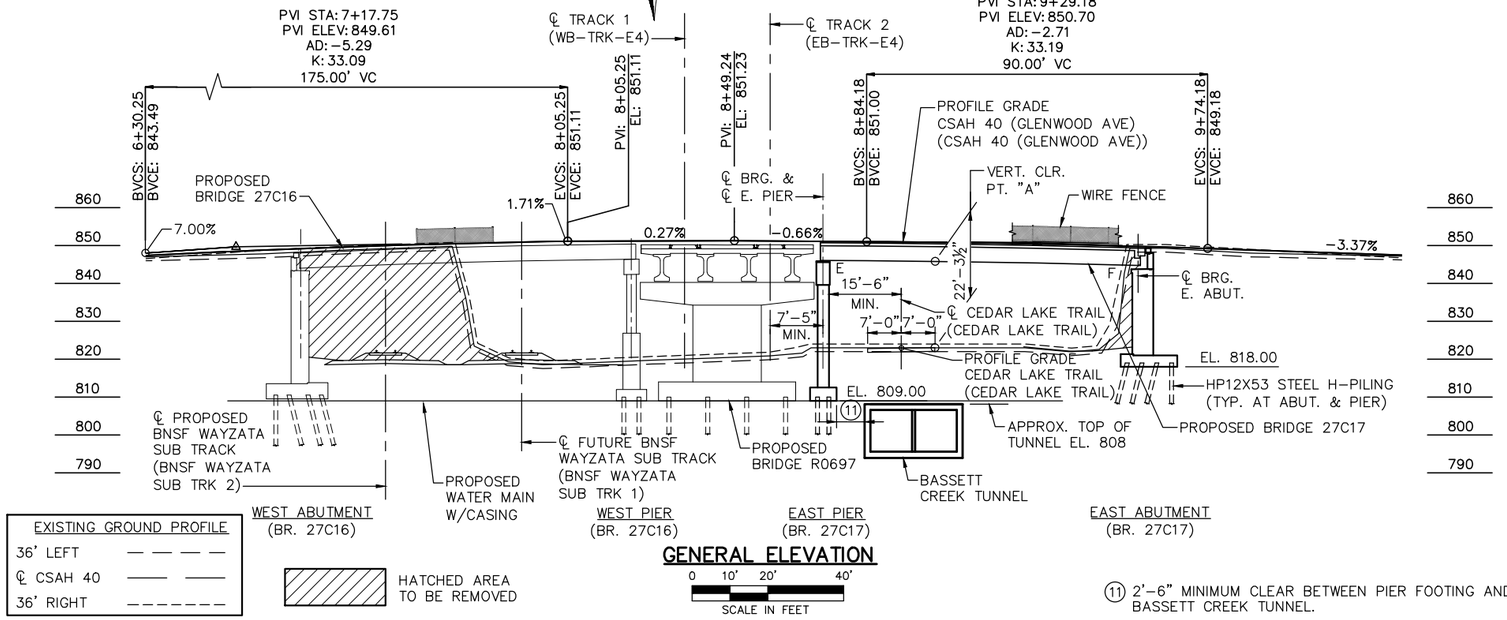

EXISTING GROUND PROFILE
36' LEFT — — — —
℄ CSAH 40 ——— ———
36' RIGHT — — — — — —

HATCHED AREA TO BE REMOVED

GENERAL ELEVATION

0 10' 20' 40'
SCALE IN FEET

2040 PROJECTED TRAFFIC VOLUMES

	CSAH 40
A.A.D.T.	7800
D.H.V.	955
A.D.T.T.	690

DESIGN DATA

AASHTO LRFD BRIDGE DESIGN SPECIFICATIONS, 7TH EDITION, 2014 WITH 2015 INTERIM REVISIONS

SOUTHWEST LIGHT RAIL TRANSIT DESIGN CRITERIA (REVISION 4.0)

LOAD AND RESISTANCE FACTOR DESIGN METHOD HL-93 LIVE LOAD

DEAD LOAD INCLUDES 20 PSF ALLOWANCE FOR FUTURE WEARING COURSE MODIFICATIONS

MATERIAL DESIGN PROPERTIES:
REINFORCED CONCRETE:
f'c = 4 KSI n = 8
fy = 60 KSI REINFORCEMENT

PRESTRESSED CONCRETE:
f'c = 7 KSI n = 1
fpu = 270 KSI
FOR 0.6" DIA. LOW RELAXATION STRANDS

STRUCTURAL STEEL:
fy = 36 KSI STRUCTURAL STEEL SPEC. 3306

DESIGN SPEED: OVER = 30 MPH

DECK AREA = 6501 SQ. FT.

BRIDGE OPERATING RATING FACTOR RF =

LIST OF SHEETS

NO.	DESCRIPTION
1	GENERAL PLAN AND ELEVATION
2	TRANSVERSE SECTION AND QUANTITIES
3	BRIDGE LAYOUT
4–10	EAST ABUTMENT DETAILS
11–19	EAST ABUTMENT REINFORCEMENT
20–22	EAST PIER DETAILS
23–25	EAST PIER REINFORCEMENT
26	FRAMING PLAN
27	MN45" PRESTRESSED CONCRETE BEAM DETAILS
28–37	SUPERSTRUCTURE DETAILS
38–41	RAILING DETAILS
42	STRUCTURAL TUBE RAILING (T-1) AND CONCRETE PARAPET (TYPE P-2, TL-4)
43	CONCRETE CURB
44	CONCRETE BARRIER (TYPE P-4,TL-4)
45–46	WIRE FENCE (DESIGN W-1, SPECIAL DESIGN)
47	CONDUIT SYSTEM
48–50	WATERPROOF EXPANSION DEVICE
51–55	APPROACH PANEL DETAILS
56–60	BRIDGE DETAILS
61	AS-BUILT BRIDGE DATA
62–64	BRIDGE SURVEY
65	BRIDGE SURVEY PLAN
66–67	BRIDGE SURVEY PROFILE
68–71	STAGING PLAN

NOTES:

SEE SHEET 65 FOR INPLACE UTILITIES.

SEE SHEET 68–71 FOR STAGING PLANS AND SOE.

(1) ℄ CSAH 40 (GLENWOOD AVE) (CSAH 40 (GLENWOOD AVE)) P.O.T. STA. 7+47.08
℄ PROPOSED BNSF WAYZATA SUB TRACK (BNSF WAYZATA SUB TRK 2) P.O.C. STA. 112+21.20
X = 525722.907 Y = 168541.154
Δ = 35°02'00.5"

(2) ℄ CSAH 40 (GLENWOOD AVE) (CSAH 40 (GLENWOOD AVE)) P.O.T. STA. 7+73.11
℄ PROPOSED FUTURE BNSF WAYZATA SUB TRACK (BNSF WAYZATA SUB TRK 1) P.O.C. STA. 112+41.42
X = 525748.844 Y = 168539.008
Δ = 35°21'28.2"

(3) ℄ CSAH 40 (GLENWOOD AVE) (CSAH 40 (GLENWOOD AVE)) P.O.T. STA. 8+16.03
℄ TRACK 1 (WB-TRK-E4) P.O.C. STA. 1935+31.47
X = 525791.624 Y = 168535.469
Δ = 35°53'13.5"

(4) ℄ CSAH 40 (GLENWOOD AVE) (CSAH 40 (GLENWOOD AVE)) P.O.T. STA. 8+39.83
℄ TRACK 2 (EB-TRK-E4) P.O.C. STA. 2935+52.51
X = 525815.344 Y = 168533.506
Δ = 36°10'39.1"

(5) CONTROL POINT
℄ CSAH 40 (GLENWOOD AVE) (CSAH 40 (GLENWOOD AVE)) P.O.T. STA. 8+84.56
℄ CEDAR LAKE TRAIL (CEDAR LAKE TRAIL) P.O.C. STA. 508+96.13
X = 525859.922 Y = 168529.818
Δ = 36°15'14.0"

(6) PEDESTRIAN FLASHER AT STA. 8+25.13

(7) OCS POLE E293567 AT STA. 8+57.33. SEE SYSTEMWIDE ELECTRICAL PLANS.

(8) GATE ARM AT STA. 9+08.10. STEEL MAINTENANCE PLATFORM BEHIND BARRIER.

(9) EXISTING BRIDGE 27569 TO BE REMOVED. STEEL SPAN BUILT IN 1989. 181.8' LONG, 70.3' WIDE.

(10) EXISTING TERRACED BLOCK WALL TO BE SALVAGED AND REINSTALLED. SEE SHEET 2 FOR NOTES.

(11) 2'-6" MINIMUM CLEAR BETWEEN PIER FOOTING AND BASSETT CREEK TUNNEL.

BRIDGE NO. 27C17

CSAH 40 (GLENWOOD AVENUE)
OVER CEDAR LAKE TRAIL
0.2 MI. EAST OF JCT. CSAH 40 (GLENWOOD AVENUE) & INTERSTATE 94

83' P.C.B. SPAN, 54°14'02.4" SKEW,
2–21' RDWY., 6'–0" RAISED CONC. MEDIAN,
TYPE P–2 CONC. PARAPETS & STRUC. TUBE RAILINGS, 8'–6" SIDEWALKS WITH CONC. CURBS & PARAPETS W/ WIRE FENCE

BRIDGE I.D. NO. 501

GENERAL PLAN AND ELEVATION

SEC 22 T 29 N R 24 W
CITY OF MINNEAPOLIS HENNEPIN COUNTY

JOB NO.: T9N635 | STATE PROJ. NO.: 9909–01 | MNDOT REVIEW: JOE NIETFELD

NO.	DATE	BY	CHECK	DESIGN	REVISION / SUBMITTAL

DESIGNED BY: BAW CHECKED BY: BLF
DRAWN BY: LMT CHECKED BY: BLF

AECOM Kimley»Horn

90% SUBMISSION - 01/22/16

METROPOLITAN COUNCIL
SOUTHWEST Green Line LRT Extension

CIVIL - VOLUME 4G
CSAH 40 (GLENWOOD AVENUE) - EAST BRIDGE 27C17
GENERAL PLAN AND ELEVATION

DISCIPLINE: STRUCTURES
SHEET NAME: CBR27C17-BRG-GPE

SHEET 1 OF 71

Jan, 18 2016 09:16 am V:\3400_ADC\CAD\SEGMENT E4\PLAN SHEETS\STRUCTURES\27C17\CBR27C17-BRG-GPE.dwg By: brad.wodash

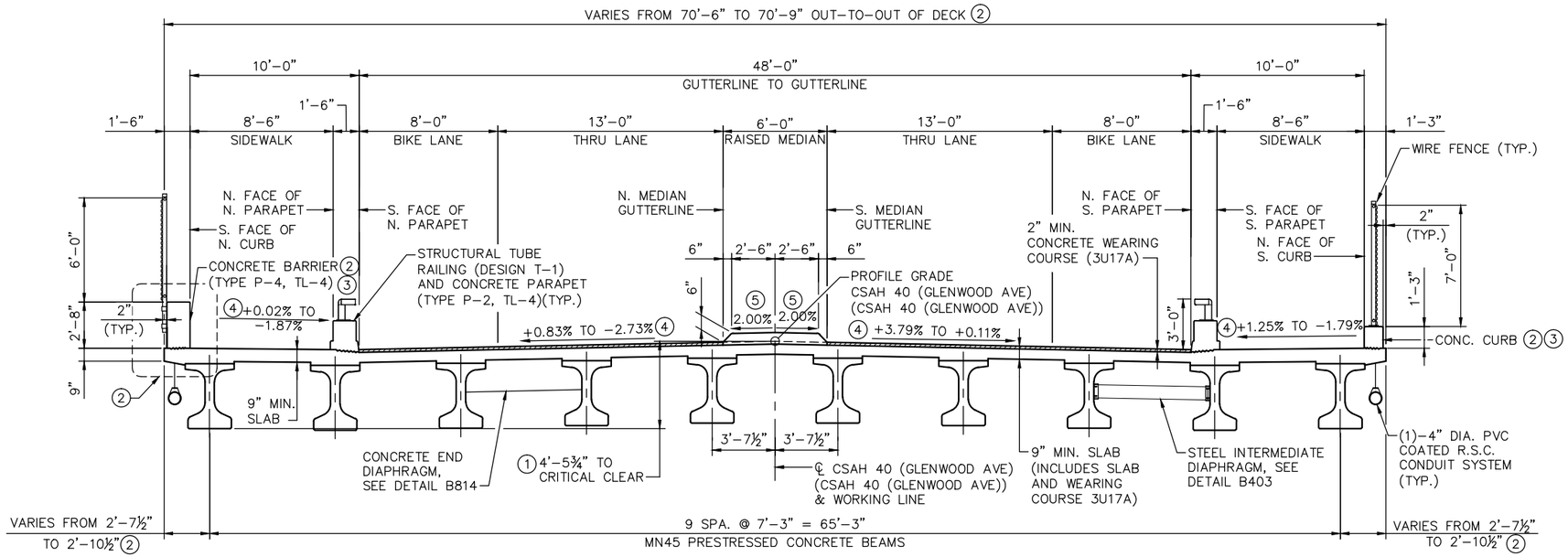

IDEALIZED TRANSVERSE SECTION

0 2' 4' 8'
SCALE IN FEET

CONSTRUCTION NOTES:

THE 2016 EDITION OF THE MINNESOTA DEPARTMENT OF TRANSPORTATION "STANDARD SPECIFICATIONS FOR CONSTRUCTION" SHALL GOVERN.

BRIDGE SEAT REINFORCEMENT SHALL BE CAREFULLY PLACED TO AVOID INTERFERENCE WITH DRILLING HOLES FOR ANCHOR RODS. THE BEAMS SHALL BE ERECTED IN FINAL POSITION PRIOR TO DRILLING HOLES FOR AND PLACING ANCHOR RODS.

THE BAR SIZES SHOWN IN THIS PLAN ARE IN U.S. CUSTOMARY DESIGNATIONS. THE FIRST DIGIT OR THE FIRST TWO DIGITS OF EACH BAR MARK INDICATE THE BAR SIZE.

BARS MARKED WITH THE SUFFIX "E" SHALL BE EPOXY COATED IN ACCORDANCE WITH MNDOT SPEC. 3301.

ALL REINFORCEMENT SHALL BE 2 INCHES CLEAR, UNLESS SHOWN OR NOTED OTHERWISE.

THE PILE LOADS SHOWN IN THE PLANS AND THE CORRESPONDING NOMINAL PILE BEARING RESISTANCE (Rn) WERE COMPUTED USING LRFD METHODOLOGY. PILE BEARING RESISTANCE DETERMINED IN THE FIELD SHALL INCORPORATE THE METHODS AND/OR FORMULAS DESCRIBED IN THE SPECIAL PROVISIONS.

THE SUBSURFACE UTILITY INFORMATION IN THIS PLAN IS UTILITY QUALITY LEVEL D. THIS UTILITY QUALITY LEVEL WAS DETERMINED ACCORDING TO THE GUIDELINES OF CI/ASCE 38-02, ENTITLED "STANDARD GUIDELINES FOR THE COLLECTION AND DEPICTION OF EXISTING SUBSURFACE UTILITY DATA".

AN AESTHETIC DESIGN GUIDE FOR THE SWLRT CORRIDOR HAS BEEN PREPARED.

CONTRACTOR SHALL PROVIDE VIBRATION MONITORING NEAR GLENWOOD EAST BRIDGE. SEE SPECIAL PROVISIONS.

EXCAVATION NOTES:

QUANTITY OF STRUCTURE EXCAVATION IS COMPUTED WITH THE ELEVATION SHOWN FOR EACH SUBSTRUCTURE AS THE UPPER LIMIT. EXCAVATION ABOVE THESE ELEVATIONS WILL BE UNDER THE GRADING PORTION OF THE CONTRACT.

NOTES:

DRAINAGE HAS DETERMINED THAT DECK DRAINS ARE NOT REQUIRED.

(1) CRITICAL CLEAR DIMENSION SHOWN ON PREVIOUS SHEET MEASURED TO NORTH FASCIA BEAM. 4'-5¾" MEASURED FROM NORTH FASCIA TO PROFILE GRADE.

(2) SEE SHEET 40 FOR CONCRETE BARRIER (TYPE P-4, TL-4) AND CONCRETE CURB LOCATIONS AND DIMENSIONS.

(3) CONCRETE CURB TRANSITIONS ON BOTH SIDES OF BRIDGE TO CONCRETE BARRIER. SEE SHEET 40 FOR LOCATIONS.

(4) "+ VALUE" DENOTES ARROW DIRECTION AS SHOWN. "- VALUE" DENOTES OPPOSITE ARROW DIRECTION AS SHOWN.

(5) SLOPE TOP SURFACE OF CONCRETE MEDIAN.

JOINT NOTES:

1. FINISH TOP OF ALL SIDEWALK AND MEDIAN JOINTS WITH ¼" RADIUS EDGER, AND VERTICAL EDGES WITH ½" V STRIPS.
2. SUPERSTRUCTURE DIMENSIONS ARE BASED ON THE EXPANSION JOINT DIMENSION AT 90° F.

GROUNDING NOTES:

SEE SHEETS ELE-SITE-SCH-504, ELE-SITE-600, ELE-SITE-DTL-601 AND ELE-SITE-DTL-602 FOR ADDITIONAL FENCE GROUNDING INFORMATION. FOR BRIDGES, ABUTMENTS AND RETAINING WALLS THAT DO NOT HAVE STRAY CURRENT SYSTEMS, GROUND THE FENCE AS SHOWN IN THE WIRE FENCE DETAIL.

NOTES:

(1) A BENCH MARK IS REQUIRED. LOCATED AT THE SE CORNER OF THE BRIDGE. STATE WILL FURNISH DISK. BEND PRONGS OUTWARD TO ANCHOR DISK IN CONCRETE. BOTTOM OF DISK TOP TO BE PLACED FLUSH WITH CONCRETE.

(2) QUANTITIES LISTED FOR THE COMPONENT ITEMS OF THE LUMP SUM BR 27C17 ITEM ARE FOR INFORMATIONAL PURPOSES. ANY ADDITIONAL ITEMS OR CHANGES IN QUANTITIES REQUIRED SHALL BE PROVIDED BY THE CONTRACTOR WITH NO ADDITIONAL COMPENSATION.

(3) MEASUREMENT AND PAYMENT FOR COMPONENT ITEMS SHALL BE PART OF THE LUMP SUM PAYMENT FOR THE BR 27C17. REFER TO MnDOT STANDARD SPECIFICATION OR SPECIAL PROVISION FOR TECHNICAL SPECIFICATION REQUIREMENTS FOR ALL PROVISION OTHER THAN MEASUREMENT AND PAYMENT REQUIREMENTS.

(4) BACKFILL BEHIND ABUTMENTS SHALL BE SELECT GRANULAR BORROW PER SPEC. 3149.2.D.2. SEE SHEET 67 FOR PLACEMENT LIMITS. BACKFILL DENSITY SHALL BE ATTAINED BY THE SPECIFIED DENSITY METHOD IN ACCORDANCE WITH SPEC. 2105.3.F.1.

(5) QUANTITY FOR 84" TALL WIRE FENCE FABRIC.

(6) QUANTITY FOR 72" TALL WIRE FENCE FABRIC.

SCHEDULE OF QUANTITIES

SPEC. SECTION	COMPONENT ITEM	UNIT	QUANTITY
–	CONSTRUCT BRIDGE 27C17	LUMP SUM	LS

COMPONENT ITEM SUMMARY (BRIDGE 27C17)

	SPEC. SECTION (3)	COMPONENT ITEM	UNIT (2)	QUANTITY (2)
	2104	SALVAGE RETAINING WALL	LIN. FT.	
	2401	STRUCTURAL CONCRETE (1G52)	CU. YD.	
(1)	2401	STRUCTURAL CONCRETE (3B52)	CU. YD.	
	2401	TYPE CURB RAILING CONCRETE (3S52)	LIN. FT.	
	2401	TYPE P-2 (TL-4) RAILING CONCRETE (3S52)	LIN. FT.	
	2401	TYPE MOD P-4 RAILING CONCRETE (3S52)	LIN. FT.	
	2401	RAISED MEDIAN CONCRETE (3S52)	SQ. FT.	
	2401	REINFORCEMENT BARS	POUND	
	2401	REINFORCEMENT BARS (EPOXY COATED)	POUND	
(4)	SB-XX	STRUCTURE EXCAVATION U	CU. YD.	
	SB-XX	BRIDGE SLAB CONCRETE (3YHPC-S)	CU. YD.	
	2402	EXPANSION JOINT DEVICES TYPE 5	LIN. FT.	
	2402	BEARING ASSEMBLY	EACH	
	2402	STRUCTURAL TUBE RAILING DESIGN T-1	LIN. FT.	
	2404	CONCRETE WEARING COURSE (3U17A)	SQ. FT.	
	2405	PRESTRESSED CONCRETE BEAMS MN45	LIN. FT.	
	2405	DIAPHRAGMS FOR TYPE MN45 PRESTRESSED BEAMS	LIN. FT.	
	2406	BRIDGE APPROACH PANELS	SQ. YD.	
	2411	RECONSTRUCT RETAINING WALL	LIN. FT.	
	2411	REVERSE BATTEN SURFACE TREATMENT	SQ. YD.	
	2442	REMOVE EXISTING BRIDGE	EACH	0.5
	2451	STRUCTURAL BACKFILL	CU. YD.	
	2452	STEEL H-PILING 12"	LIN. FT.	
	2452	STEEL H-TEST PILE 30 FT LONG 12"	EACH	
	2452	STEEL H-TEST PILE 60 FT LONG 12"	EACH	
	2452	PILE TIP PROTECTION 12"	EACH	
	SB-XX	PREBORING (EARTH)	LIN. FT.	
	2502	DRAINAGE SYSTEM (B910)	EACH	
	2531	TRUNCATED DOMES	SQ. FT.	
	2545	CONDUIT SYSTEM (SYSTEM WIDE ELECTRICAL)	EACH	
	2545	CONDUIT SYSTEM (LIGHTING)	EACH	
	2545	LIGHT SUPPORT BRACKET	EACH	
(5) | 2557 | WIRE FENCE DESIGN W-1 | LIN. FT. | |
(6) | 2557 | WIRE FENCE DESIGN SPECIAL | LIN. FT. | |

EXISTING RETAINING WALL NOTES:

THE EXISTING BLOCK RETAINING WALLS AT THE SOUTHEAST BRIDGE CORNER SHALL BE DISASSEMBLED TO INSTALL THE SOE. BLOCKS SHALL BE SALVAGED AND STORED ON SITE OR AT A LOCATION APPROVED BY THE ENGINEER IN THE FIELD. LIMITS OF REMOVAL WILL BE BASED ON THE CONTRACTORS CONSTRUCTION METHODS AND SOE. AFTER CONSTRUCTION OF THE EAST SUBSTRUCTURE, THE BLOCK RETAINING WALLS SHALL BE RE-INSTALLED TO A SIMILAR ALIGNMENT AND HEIGHT PRIOR TO CONSTRUCTION. THE CONTRACTOR SHALL BE RESPONSIBLE FOR FURNISHING CERTIFIED DESIGN CALCULATIONS, SHOP DRAWINGS, ADDITIONAL BLOCKS (IF APPLICABLE), SOIL REINFORCEMENT ELEMENTS (IF APPLICABLE), WALL CONSTRUCTION, EXCAVATION AND BACKFILL.

NO.	DATE	BY	CHECK	DESIGN	REVISION / SUBMITTAL

DESIGNED BY: BAW CHECKED BY: BLF
DRAWN BY: LMT CHECKED BY: BLF

AECOM Kimley»Horn

90% SUBMISSION - 01/22/16

METROPOLITAN COUNCIL

SOUTHWEST Green Line LRT Extension

CIVIL - VOLUME 4G
CSAH 40 (GLENWOOD AVENUE) - EAST
BRIDGE 27C17
TRANSVERSE SECTION AND QUANTITIES

DISCIPLINE: STRUCTURES
SHEET NAME: CBR27C17-BRG-TRN-001

SHEET 2 OF 71

Jan. 18 2016 09:17 am V:\3400_ADC\CAD\SEGMENT E4\PLAN SHEETS\STRUCTURES\27C17\CBR27C17-BRG-TRN-001.dwg By: brad.wodash

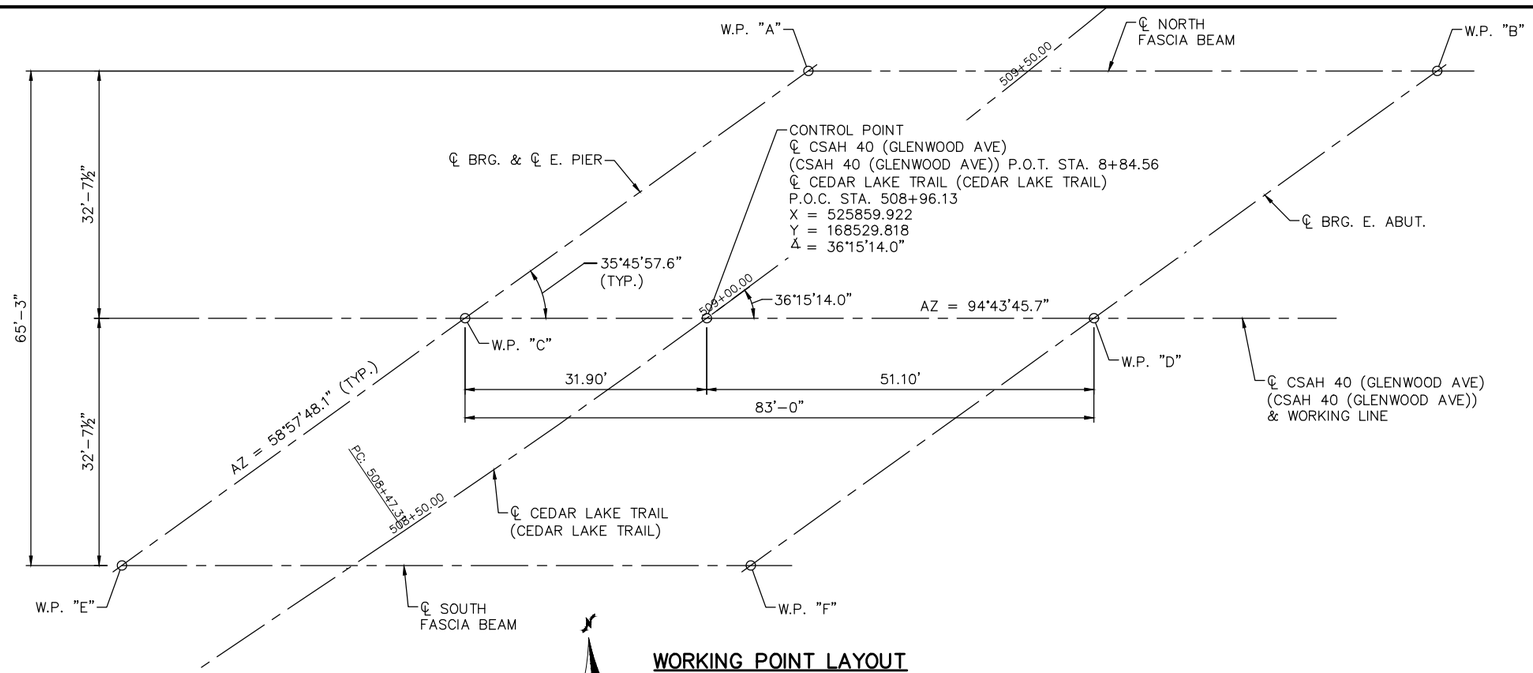

WORKING POINT LAYOUT

0 5' 10' 20'
SCALE IN FEET

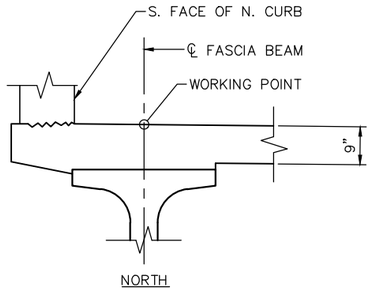

NORTH

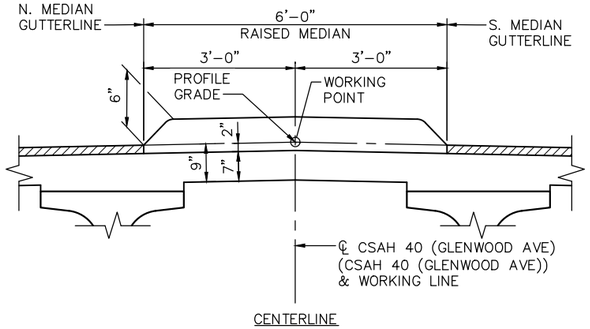

CENTERLINE

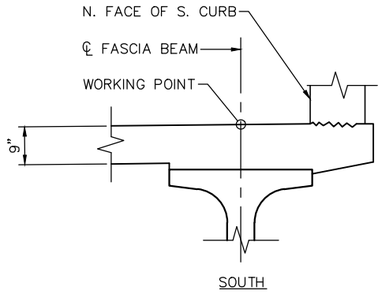

SOUTH

WORKING POINT LOCATIONS

DIMENSIONS BETWEEN WORKING POINTS								COORDINATES		ELEVATIONS			
POINT	STATION	A	B	C	D	E	F	X	Y	TOP OF SLAB	TOP OF SLAB TO BRIDGE SEAT	BRIDGE SEAT	POINT
A	8+97.96		83.00	55.82	49.86		65.69	525875.959	168561.228	851.50	5.07	846.43	A
B	9+80.96				55.82	185.44		525958.677	168554.385	849.05	4.96	844.09	B
C	8+52.66				83.00	55.82	49.86	525828.131	168532.448	851.21			C
D	9+35.66						55.82	525910.849	168525.605	850.26			D
E	8+07.36						83.00	525780.303	168503.669	850.92	5.07	845.85	E
F	8+90.37							525863.021	168496.826	850.76	4.96	845.80	F

TOP OF ROADWAY TO BRIDGE SEAT						
	DECK THICKNESS	STOOL HEIGHT	BEAM HEIGHT	BEARING HEIGHT	TOTAL	
					INCHES	FEET
EAST PIER B1 - B10	9"	2 1/4	45"	4 5/8"	60 7/8	5.07
EAST ABUT. B1 - B10	9"	2 1/4	45"	3 1/4"	59 1/2	4.96

NO.	DATE	BY	CHECK	DESIGN	REVISION / SUBMITTAL

DESIGNED BY: BAW | CHECKED BY: BLF
DRAWN BY: LMT | CHECKED BY: BLF

AECOM Kimley»Horn

90% SUBMISSION - 01/22/16

METROPOLITAN COUNCIL

SOUTHWEST Green Line LRT Extension

CIVIL - VOLUME 4G
CSAH 40 (GLENWOOD AVENUE) - EAST BRIDGE 27C17
BRIDGE LAYOUT

DISCIPLINE: STRUCTURES
SHEET NAME: CBR27C17-BRG-SUP-001

SHEET 3 OF 71

Jan, 18 2016 09:17 am V:\3400_ADC\CAD\SEGMENT E4\PLAN SHEETS\STRUCTURES\27C17\CBR27C17-BRG-SUP-001.dwg By: brad.wodash

EAST ABUTMENT AND WINGWALLS COMPUTED PILE LOAD - TONS/PILE	
FACTORED DEAD LOAD + EARTH PRESSURE	114.1
FACTORED LIVE LOAD	7.2
* FACTORED DESIGN LOAD	121.3

* BASED ON STRENGTH V LOAD COMBINATION.

EAST ABUTMENT AND WINGWALLS REQUIRED NOMINAL PILE BEARING RESISTANCE FOR H-PILES Rn - TONS/PILE		
FIELD CONTROL METHOD	φdyn	* Rn
MN/DOT PILE FORMULA 2012 (MPF12) $R_n = 20\sqrt{\frac{W \times H}{1000}} x log\left(\frac{10}{S}\right)$	0.60	203
PDA	0.65	187

* Rn = (FACTORED DESIGN LOAD) / φdyn

GENERAL PILE NOTES

3 STEEL H–TEST PILES 30 FT. LONG
115 STEEL H–PILES EST. LENGTH 30 FT.
118 STEEL H–PILES REQ'D FOR EAST ABUTMENT AND WINGWALLS

EAST ABUTMENT & WINGWALL PILES ARE TO BE HP12x53 WITH PILE TIP PROTECTION.

PILE SPACING SHOWN IS AT BOTTOM OF FOOTING.

PILES MARKED THUS ⊢► TO BE BATTERED 3" PER FOOT IN DIRECTION SHOWN.

FOR PILE SPLICE DETAILS SEE DETAIL B202.

NOTES:

PROPOSED PILES MAYBE SHIFTED A MINIMAL AMOUNT TO AVOID CONFLICT WITH EXISTING PILES AS APPROVED BY ENGINEER IN FIELD.

(1) 2 SPA. @ 9'–11" = 19'–10"

(2) PILE SPACING FOR FRONT ROW AND 3RD ROW OF PILING IN SE WINGWALL.

(3) PILE SPACING FOR 2ND ROW OF PILING IN SE WINGWALL.

(4) AFTER PILE DRIVING, THE BRIDGE CONTRACTOR AND UTILITY CONTRACTOR SHALL COORDINATE INSTALLATION OF PROPOSED WATER MAIN AND CONCRETE CASING UNDER THE CONCRETE FOOTING.

(5) BRIDGE CONTRACTOR SHALL REMOVE ALL EXISTING PILES IN THIS AREA TO A MINIMUM OF 2 FEET BELOW PROPOSED WATER MAIN CASING WHILE THE EXISTING ABUTMENT IS BEING REMOVED.

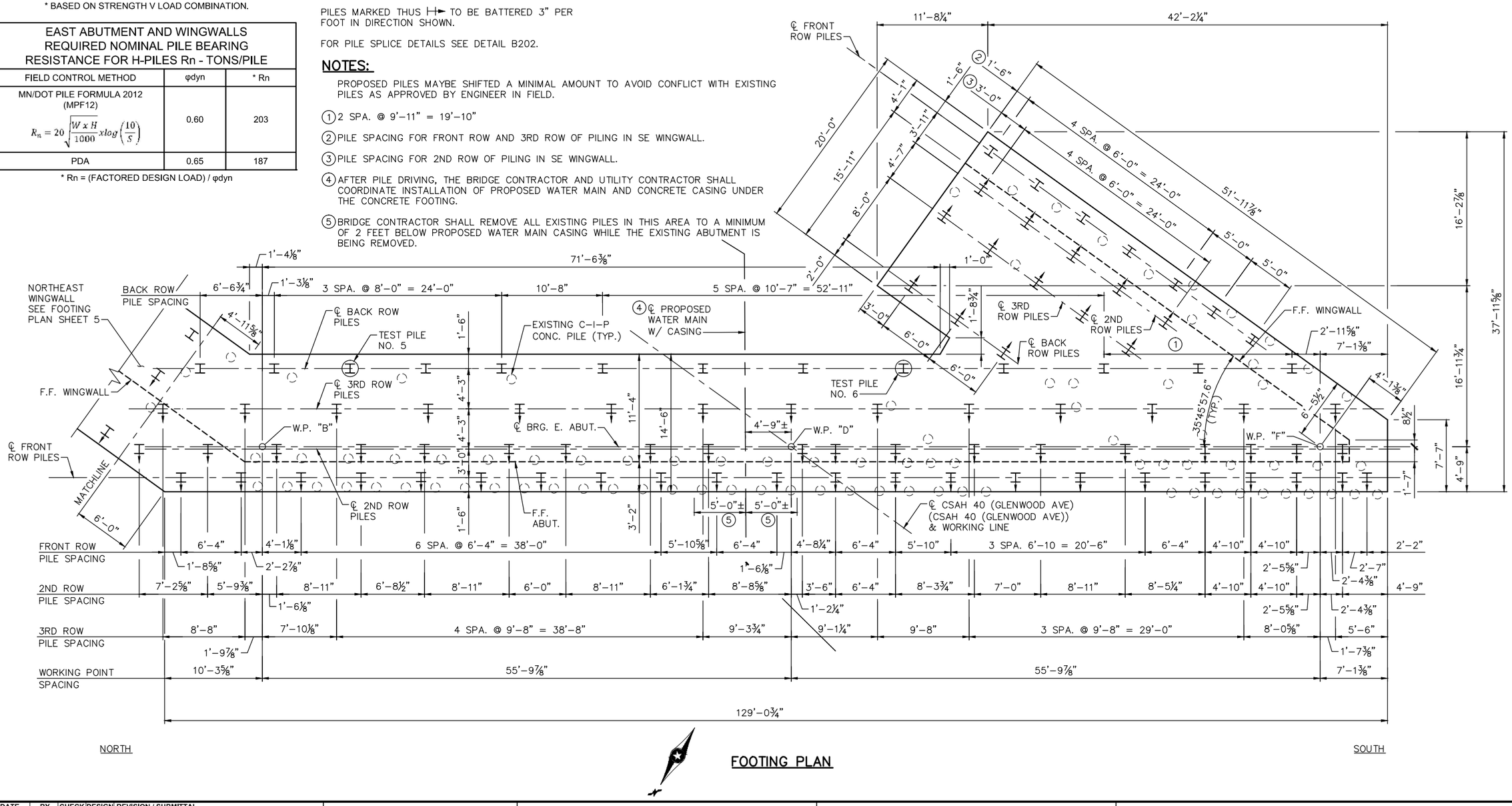

FOOTING PLAN

NO.	DATE	BY	CHECK	DESIGN	REVISION / SUBMITTAL

DESIGNED BY: BAW CHECKED BY: BLF
DRAWN BY: LMT CHECKED BY: BLF

AECOM Kimley»Horn

90% SUBMISSION - 01/22/16

METROPOLITAN COUNCIL

SOUTHWEST Green Line LRT Extension

CIVIL - VOLUME 4G
CSAH 40 (GLENWOOD AVENUE) - EAST
BRIDGE 27C17
EAST ABUTMENT DETAILS 1

DISCIPLINE: STRUCTURES
SHEET NAME: CBR27C17-BRG-ABT-001-1

SHEET 4 OF 71

Jan, 18 2016 09:18 am v:\3400_ADC\CAD\SEGMENT E4\PLAN SHEETS\STRUCTURES\27C17\CBR27C17-BRG-ABT-001.dwg By: brad.wodash

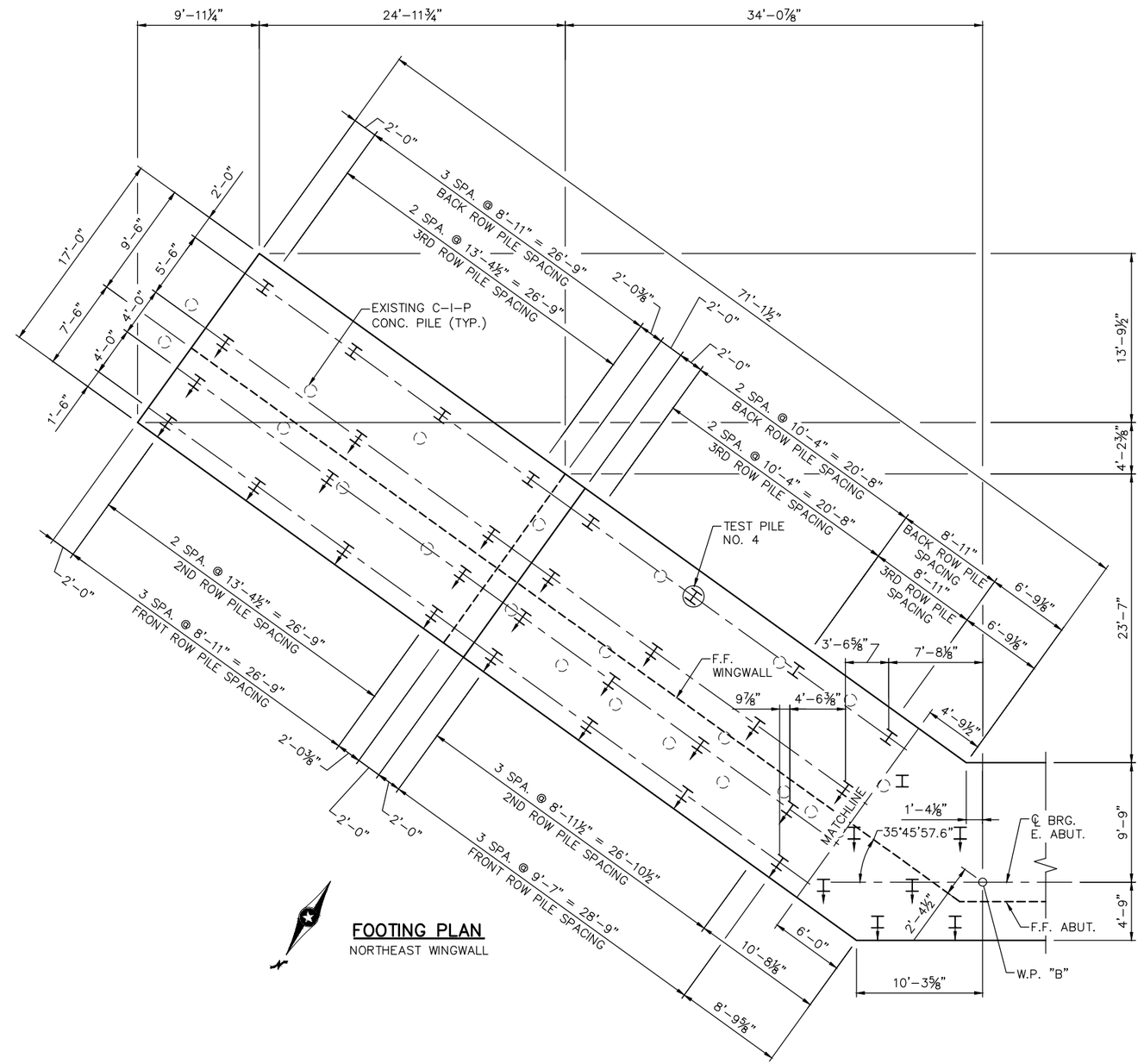

FOOTING PLAN
NORTHEAST WINGWALL

NO.	DATE	BY	CHECK	DESIGN	REVISION / SUBMITTAL

DESIGNED BY: BAW | CHECKED BY: BLF
DRAWN BY: LMT | CHECKED BY: BLF

AECOM Kimley»Horn

90% SUBMISSION - 01/22/16

METROPOLITAN COUNCIL

SOUTHWEST Green Line LRT Extension

CIVIL - VOLUME 4G
CSAH 40 (GLENWOOD AVENUE) - EAST
BRIDGE 27C17
EAST ABUTMENT DETAILS 2

DISCIPLINE: STRUCTURES
SHEET NAME: CBR27C17-BRG-ABT-001-2

SHEET 5 OF 71

Jan. 18 2016 09:18 am V:\3400_ADC\CAD\SEGMENT E4\PLAN SHEETS\STRUCTURES\27C17\CBR27C17-BRG-ABT-001.dwg By: brad.wodash

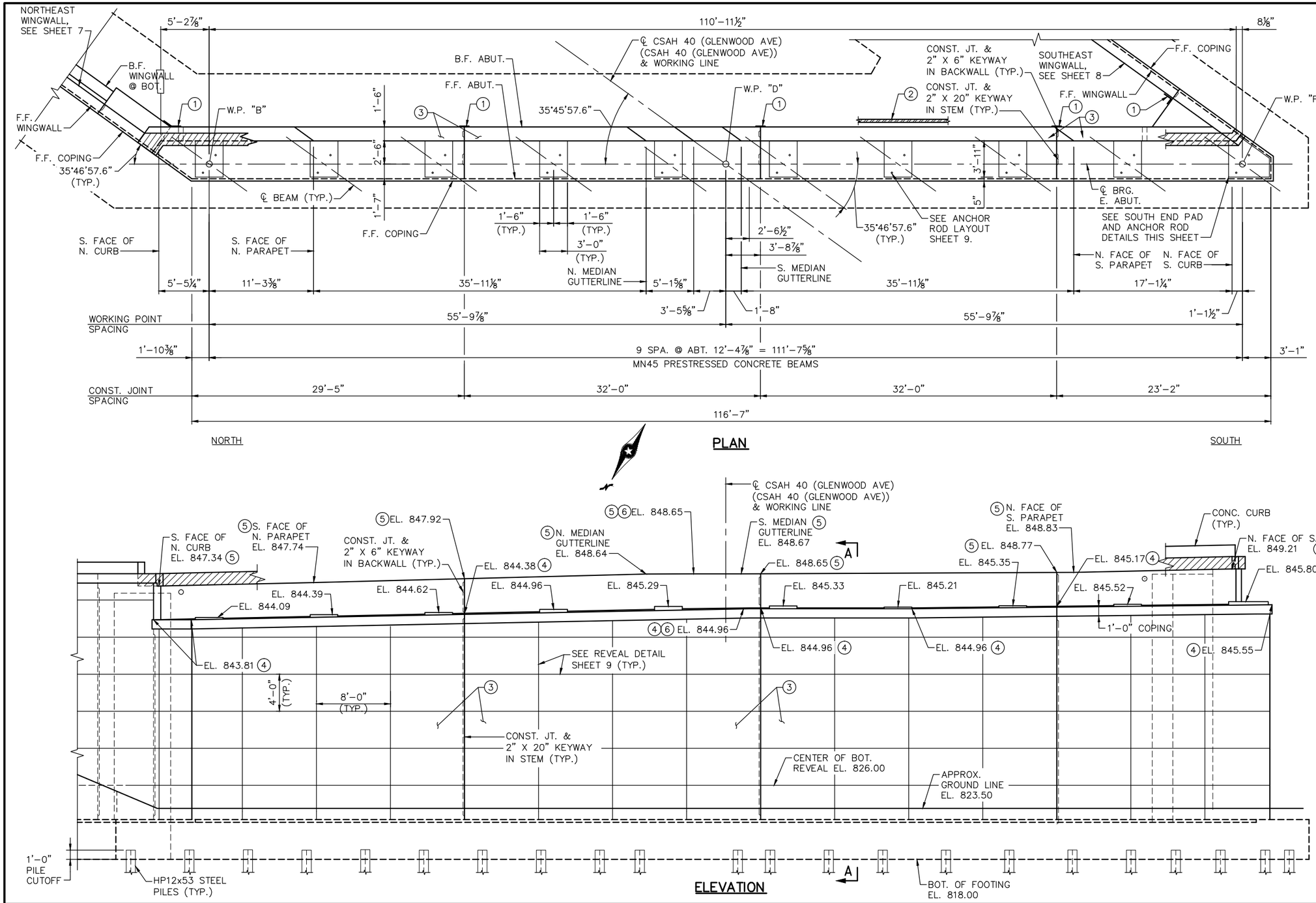

PLAN

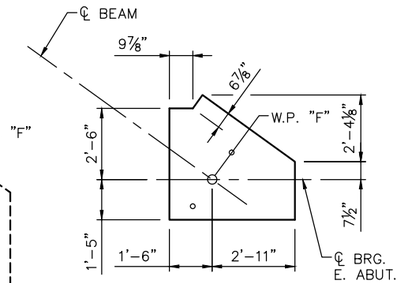

SOUTH END PAD DETAIL

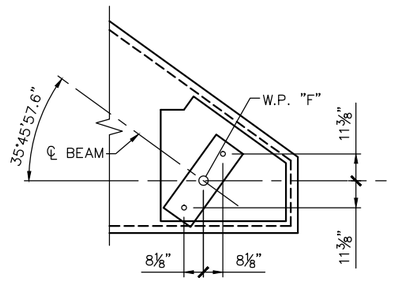

SOUTH END ANCHOR ROD LAYOUT

ELEVATION

NOTES:

PAVING BLOCK HATCHED AREA INDICATES THAT PORTION TO BE PLACED WITH THE SUPERSTRUCTURE CONCRETE.

SEE SHEET 9 FOR SECTION A–A.

SEE SHEETS 7 & 8 FOR ABUTMENT CORNER DETAILS.

SEE SHEET 9 FOR ANCHOR ROD LAYOUT.

(1) MEMBRANE WATERPROOFING SYSTEM PER MnDOT 2481.3.B.

(2) PERFORATED PIPE, SEE DETAIL B910 FOR DRAINAGE DETAILS.

(3) THERE SHALL BE A 72 HOUR MINIMUM TIME DELAY BETWEEN CONCRETE POURS OF ADJACENT ABUTMENT SECTIONS THAT HAVE VERTICAL CONSTRUCTION JOINTS. CONTRACTOR MAY PROPOSED TO REDUCE THE WAITING PERIOD IF THE CURE IS MAINTAINED. SEE SPECIAL PROVISIONS.

(4) ELEVATION AT FRONT FACE OF ABUTMENT COPING.

(5) ELEVATION AT FRONT FACE OF BACKWALL.

(6) ℄ CSAH 40 (GLENWOOD AVE)(CSAH 40 (GLENWOOD AVE)) & WORKING LINE.

NO.	DATE	BY	CHECK	DESIGN	REVISION / SUBMITTAL

DESIGNED BY: BAW | CHECKED BY: BLF
DRAWN BY: LMT | CHECKED BY: BLF

AECOM Kimley»Horn

90% SUBMISSION - 01/22/16

METROPOLITAN COUNCIL

SOUTHWEST Green Line LRT Extension

CIVIL - VOLUME 4G
CSAH 40 (GLENWOOD AVENUE) - EAST
BRIDGE 27C17
EAST ABUTMENT DETAILS 3

DISCIPLINE: STRUCTURES
SHEET NAME: CBR27C17-BRG-ABT-001-3

SHEET 6 OF 71

Jan, 18 2016 09:18 am V:\3400_ADC\CAD\SEGMENT E4\PLAN SHEETS\STRUCTURES\27C17\CBR27C17-BRG-ABT-001.dwg By: brad.wodash

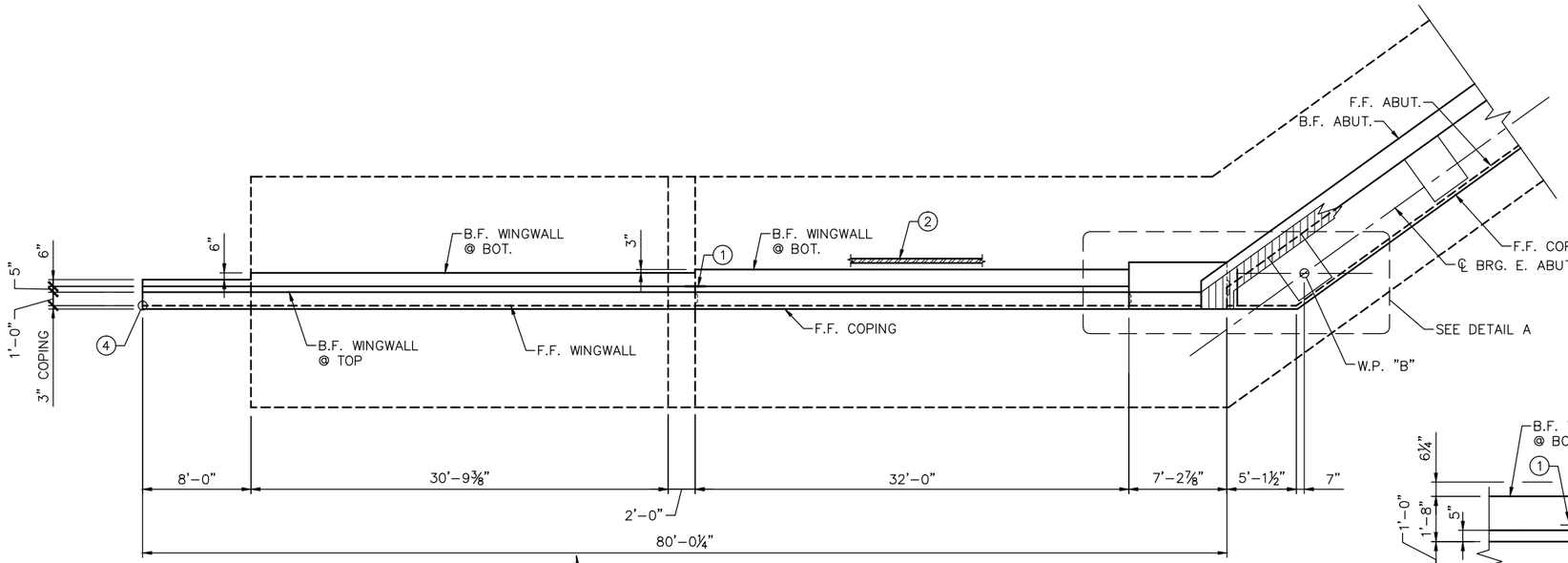

NORTHEAST WINGWALL PLAN

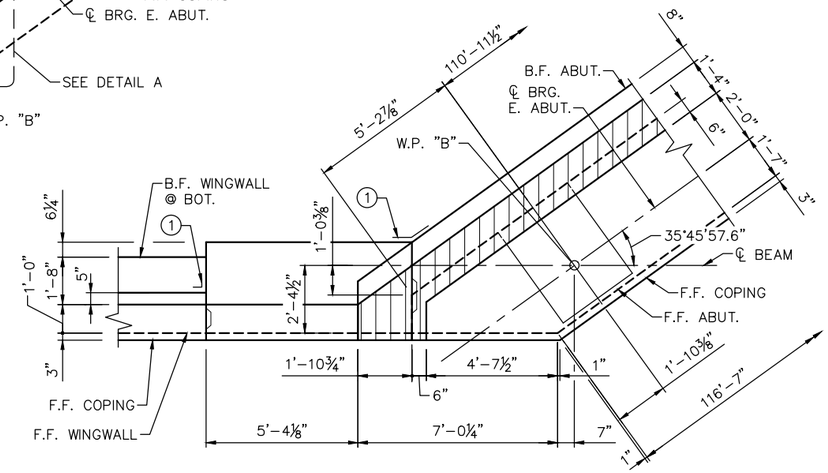

DETAIL A

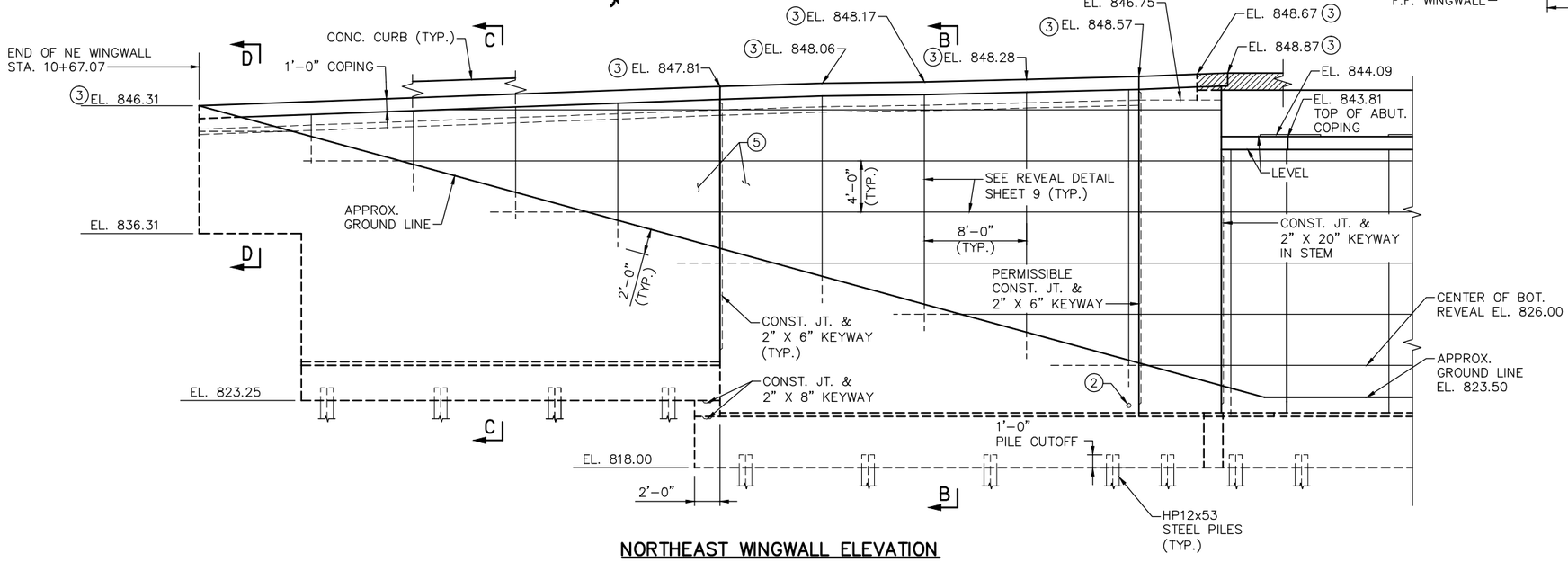

NORTHEAST WINGWALL ELEVATION

NOTES:

PAVING BLOCK HATCHED AREA INDICATES THAT PORTION TO BE PLACED WITH THE SUPERSTRUCTURE CONCRETE.

SEE SHEET 9 FOR SECTION B–B.

SEE SHEET 10 FOR SECTIONS C–C, & D–D,

(1) MEMBRANE WATERPROOFING SYSTEM PER MnDOT 2481.3.B.

(2) PERFORATED PIPE, SEE DETAIL B910 FOR DRAINAGE DETAILS.

(3) ELEVATION AT TOP OF WINGWALL COPING.

(4) END OF NE WINGWALL AT F.F. WINGWALL X=526044.319, Y=168549.683

(5) THERE SHALL BE A 72 HOUR MINIMUM TIME DELAY BETWEEN CONCRETE POURS OF ADJACENT WINGWALL SECTIONS THAT HAVE VERTICAL CONSTRUCTION JOINTS. CONTRACTOR MAY PROPOSED TO REDUCE THE WAITING PERIOD IF THE CURE IS MAINTAINED. SEE SPECIAL PROVISIONS.

NO.	DATE	BY	CHECK	DESIGN	REVISION / SUBMITTAL

DESIGNED BY: BAW | CHECKED BY: BLF
DRAWN BY: LMT | CHECKED BY: BLF

AECOM Kimley»Horn

90% SUBMISSION - 01/22/16

METROPOLITAN COUNCIL

SOUTHWEST Green Line LRT Extension

CIVIL - VOLUME 4G
CSAH 40 (GLENWOOD AVENUE) - EAST
BRIDGE 27C17
EAST ABUTMENT DETAILS 4

DISCIPLINE: STRUCTURES
SHEET NAME: CBR27C17-BRG-ABT-001-4

SHEET 7 OF 71

Jan. 18 2016 09:18 am V:\3400_ADC\CAD\SEGMENT E4\PLAN SHEETS\STRUCTURES\27C17\CBR27C17-BRG-ABT-001.dwg By: brad.wodash

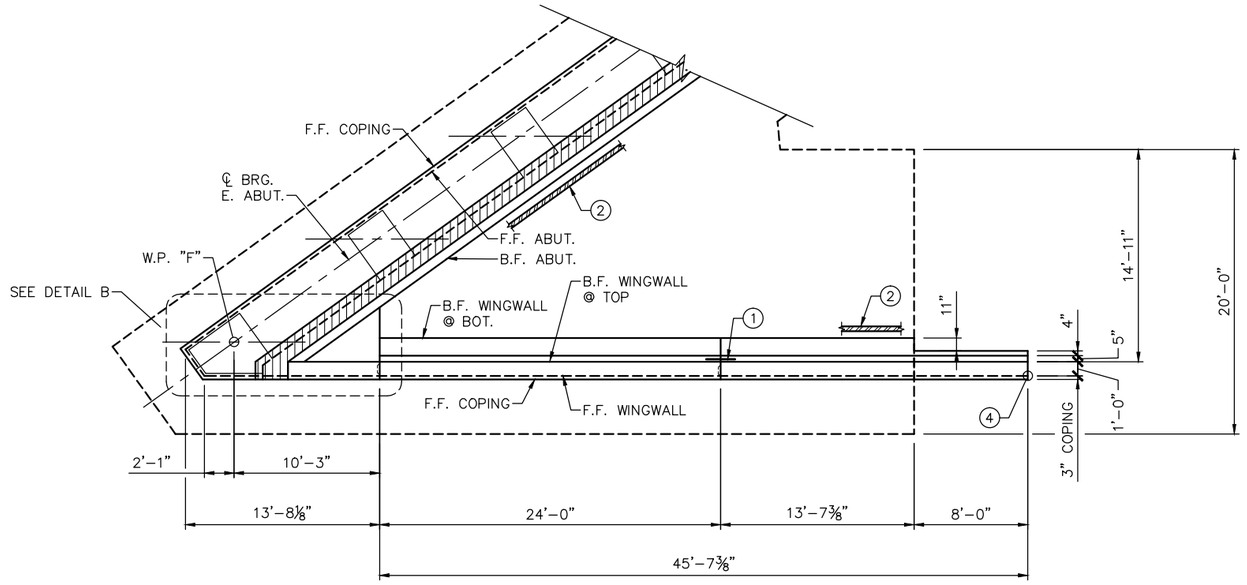

SOUTHEAST WINGWALL PLAN

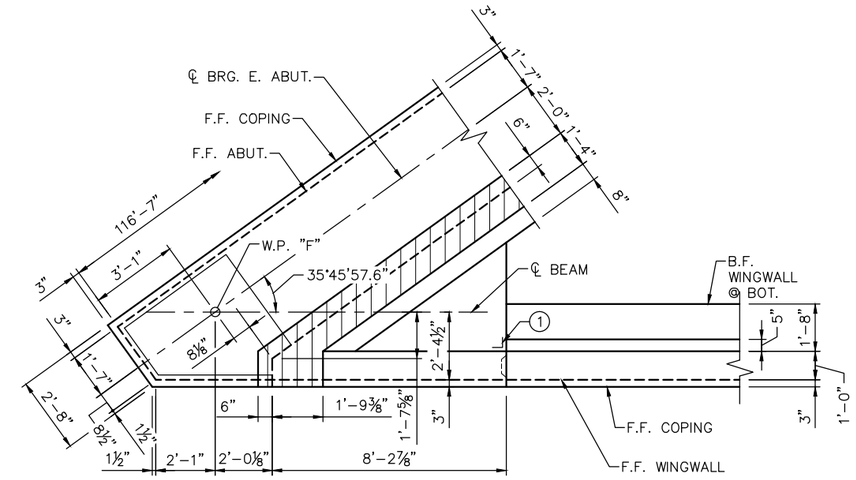

DETAIL B

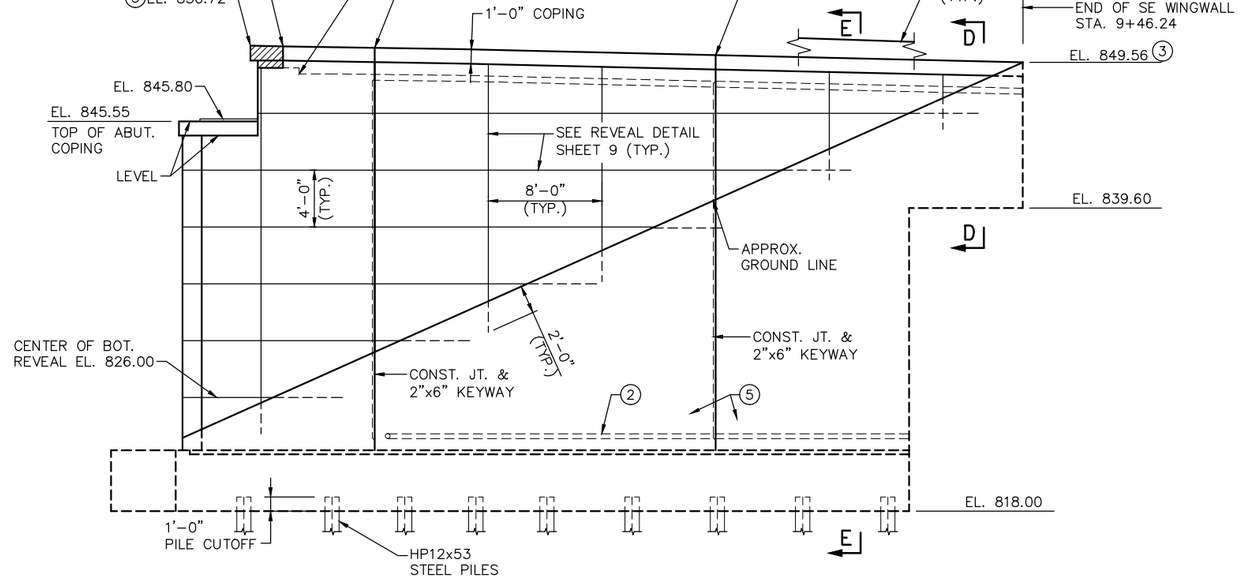

SOUTHEAST WINGWALL ELEVATION

NOTES:

PAVING BLOCK HATCHED AREA INCICATES THAT PORTION TO BE PLACED WITH THE SUPERSTRUCTURE CONCRETE.

SEE SHEET 10 FOR SECTION D–D & E–E.

(1) MEMBRANE WATERPROOFING SYSTEM PER MnDOT 2481.3.B.

(2) PERFORATED PIPE, SEE DETAIL B910 FOR DRAINAGE DETAILS.

(3) ELEVATION AT TOP OF WINGWALL COPING.

(4) END OF SE WINGWALL AT F.F. WINGWALL
X=525918.500, Y=168489.853

(5) THERE SHALL BE A 72 HOUR MINIMUM TIME DELAY BETWEEN CONCRETE POURS OF ADJACENT WINGWALL SECTIONS THAT HAVE VERTICAL CONSTRUCTION JOINTS. CONTRACTOR MAY PROPOSED TO REDUCE THE WAITING PERIOD IF THE CURE IS MAINTAINED. SEE SPECIAL PROVISIONS.

NO.	DATE	BY	CHECK	DESIGN	REVISION / SUBMITTAL

DESIGNED BY: BAW CHECKED BY: BLF
DRAWN BY: LMT CHECKED BY: BLF

AECOM Kimley»Horn

90% SUBMISSION - 01/22/16

METROPOLITAN COUNCIL

SOUTHWEST Green Line LRT Extension

CIVIL - VOLUME 4G
CSAH 40 (GLENWOOD AVENUE) - EAST
BRIDGE 27C17
EAST ABUTMENT DETAILS 5

DISCIPLINE: STRUCTURES
SHEET NAME: CBR27C17-BRG-ABT-001-5

SHEET 8 OF 71

Jan, 18 2016 09:18 am V:\3400_ADC\CAD\SEGMENT E4\PLAN SHEETS\STRUCTURES\27C17\CBR27C17-BRG-ABT-001.dwg By: brad.wodash

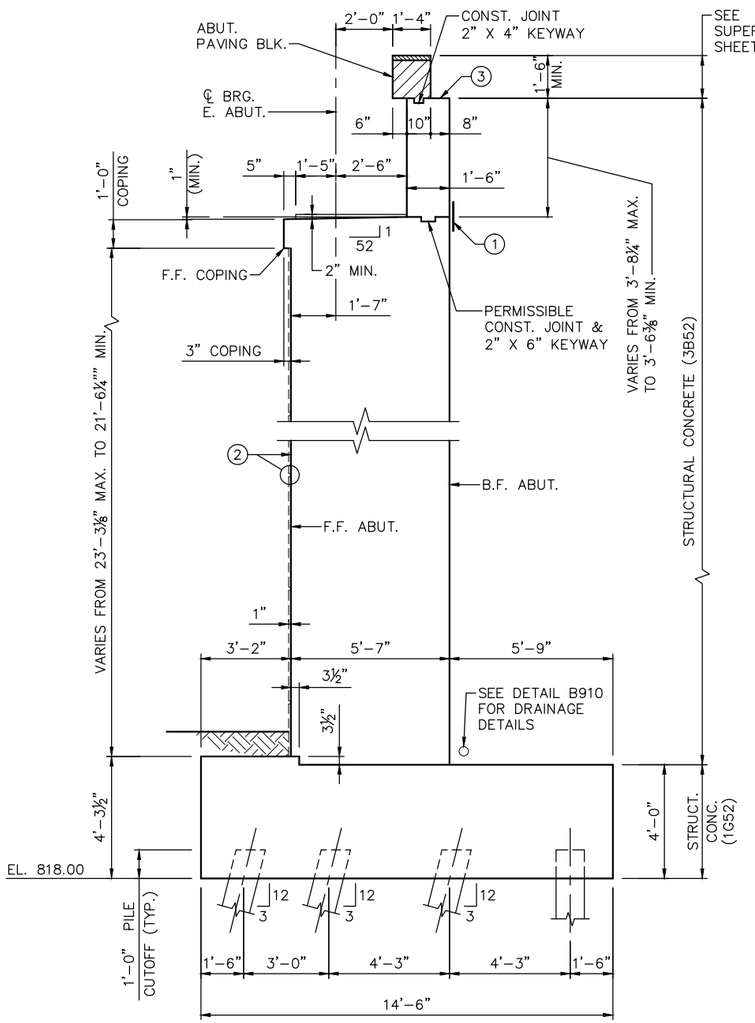

SECTION A–A

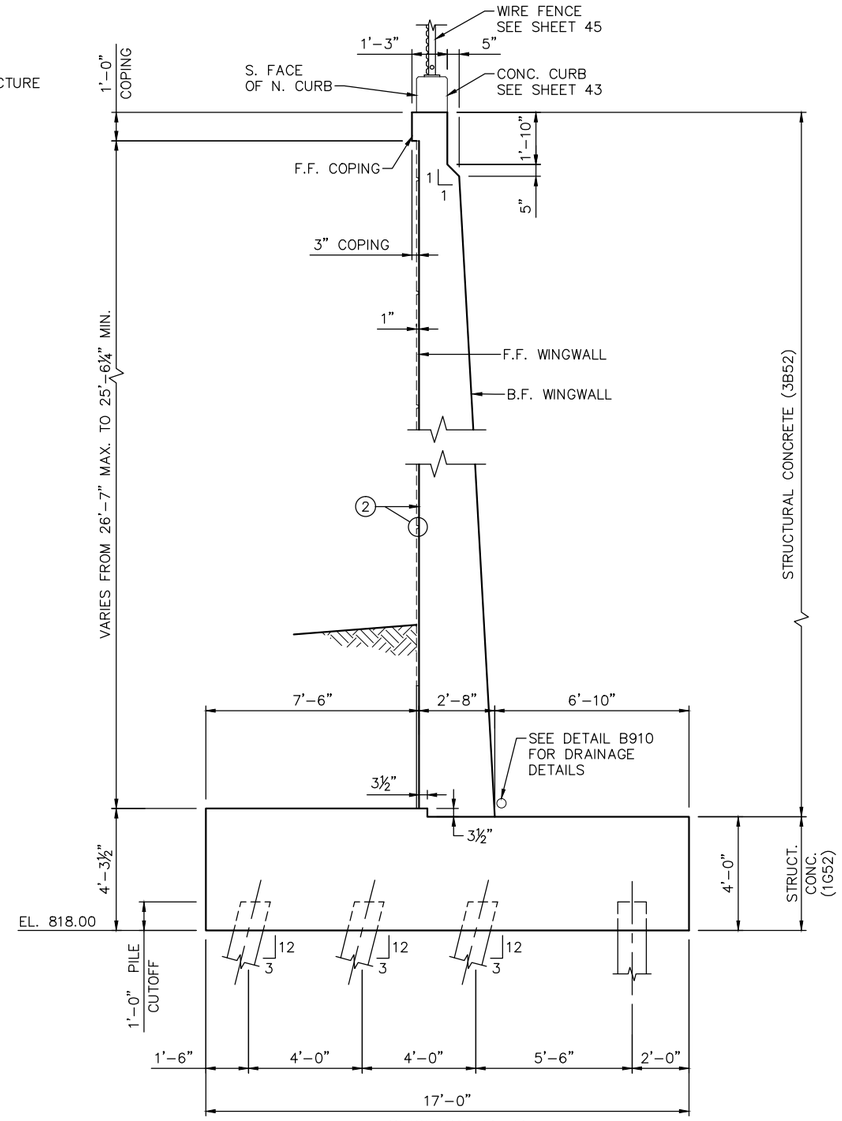

SECTION B–B

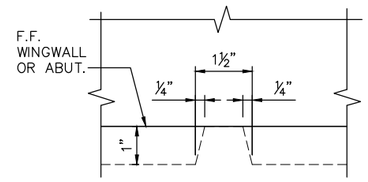

REVEAL DETAIL

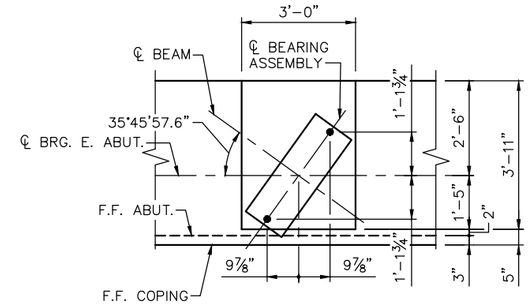

ANCHOR ROD LAYOUT

NOTES:

PAVING BLOCK HATCHED AREA INDICATES THAT PORTION TO BE PLACED WITH THE SUPERSTRUCTURE CONCRETE.

SEE SHEET 6 FOR LOCATION OF SECTION A–A.

SEE SHEET 7 FOR LOCATION OF SECTION B–B.

(1) MEMBRANE WATERPROOFING SYSTEM PER MnDOT SPEC. 2481.3.B.

(2) SEE REVEAL DETAIL THIS SHEET.

(3) TOP OF BACKWALL LEVEL PERPENDICULAR TO FRONT FACE OF WALL. BACKWALL IS SLOPED BETWEEN LOCATIONS AND ELEVATIONS SHOWN ON SHEET 6.

NO.	DATE	BY	CHECK	DESIGN	REVISION / SUBMITTAL

DESIGNED BY: BAW | CHECKED BY: BLF
DRAWN BY: LMT | CHECKED BY: BLF

AECOM Kimley»Horn

90% SUBMISSION - 01/22/16

METROPOLITAN COUNCIL

SOUTHWEST Green Line LRT Extension

CIVIL - VOLUME 4G
CSAH 40 (GLENWOOD AVENUE) - EAST
BRIDGE 27C17
EAST ABUTMENT DETAILS 6

DISCIPLINE: STRUCTURES
SHEET NAME: CBR27C17-BRG-ABT-001-6

SHEET 9 OF 71

Jan, 18 2016 09:18 am v:\3400_ADC\CAD\SEGMENT E4\PLAN SHEETS\STRUCTURES\27C17\CBR27C17-BRG-ABT-001.dwg By: brad.wodash

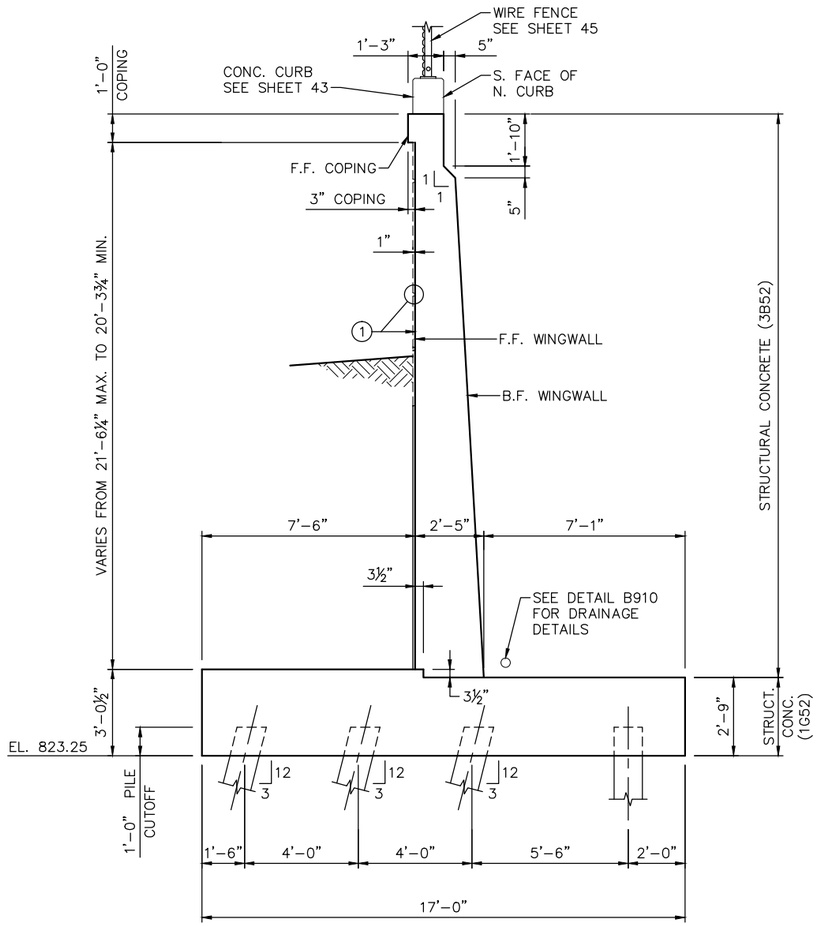

SECTION C–C

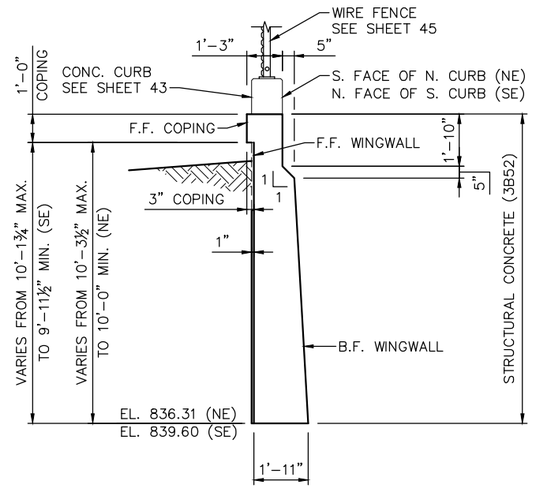

SECTION D–D

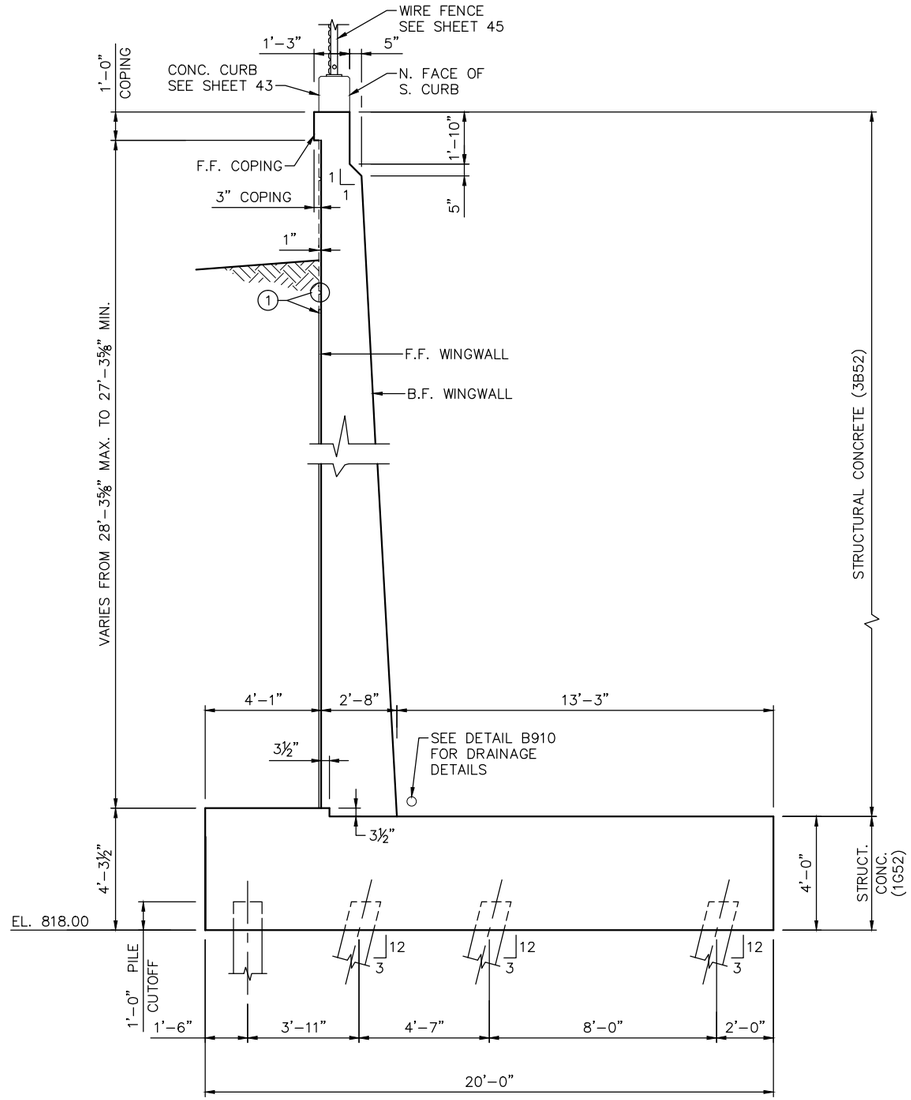

SECTION E–E

NOTES:

SEE SHEET 7 FOR LOCATION OF SECTION C–C.

SEE SHEET 8 FOR LOCATIONS OF SECTION D–D & E–E.

(1) SEE REVEAL DETAIL ON SHEET 9.

NO.	DATE	BY	CHECK	DESIGN	REVISION / SUBMITTAL

DESIGNED BY: BAW | CHECKED BY: BLF
DRAWN BY: LMT | CHECKED BY: BLF

AECOM Kimley»Horn

90% SUBMISSION - 01/22/16

METROPOLITAN COUNCIL

SOUTHWEST Green Line LRT Extension

CIVIL - VOLUME 4G
CSAH 40 (GLENWOOD AVENUE) - EAST
BRIDGE 27C17
EAST ABUTMENT DETAILS 7

DISCIPLINE: STRUCTURES
SHEET NAME: CBR27C17-BRG-ABT-001-7

SHEET 10 OF 71

Jan, 18 2016 09:19 am V:\3400_ADC\CAD\SEGMENT E4\PLAN SHEETS\STRUCTURES\27C17\CBR27C17-BRG-ABT-001.dwg By: brad.wodash

NOTES:

F.F. DENOTES FRONT FACE.
B.F. DENOTES BACK FACE.
E.F. DENOTES EACH FACE.

SEE SHEET 15 FOR SECTION F–F.

SEE SHEET 17 FOR SECTIONS G–G & H–H.

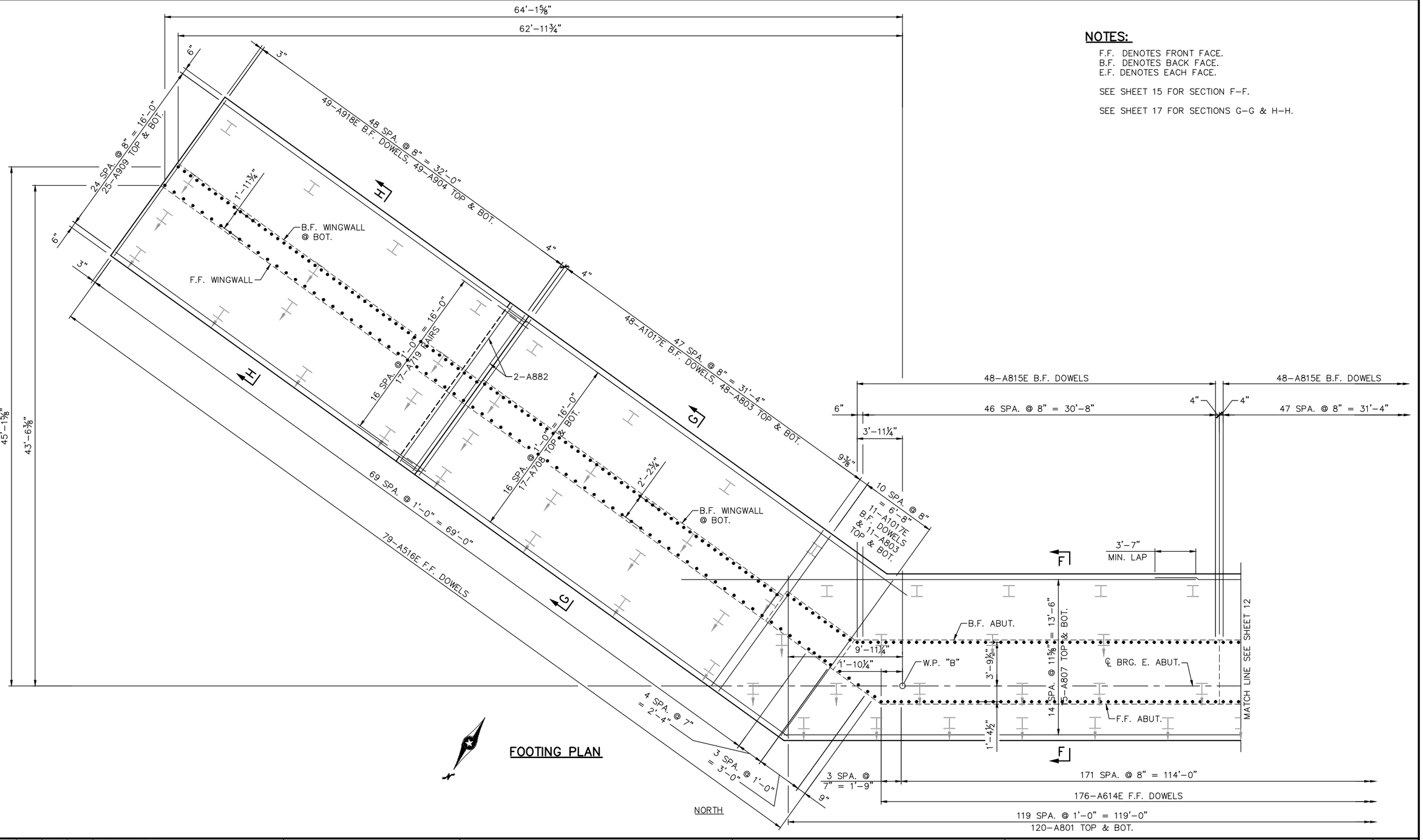

FOOTING PLAN

NO.	DATE	BY	CHECK	DESIGN	REVISION / SUBMITTAL

DESIGNED BY: BAW CHECKED BY: BLF
DRAWN BY: PHH CHECKED BY: BLF

AECOM Kimley»Horn

90% SUBMISSION - 01/22/16

METROPOLITAN COUNCIL

SOUTHWEST Green Line LRT Extension

CIVIL - VOLUME 4G
CSAH 40 (GLENWOOD AVENUE) - EAST
BRIDGE 27C17
EAST ABUTMENT REINFORCEMENT 1

DISCIPLINE: STRUCTURES

SHEET NAME: CBR27C17-BRG-ABT-001-8

SHEET 11 OF 71

Jan, 18 2016 09:19 am V:\3400_ADC\CAD\SEGMENT E4\PLAN SHEETS\STRUCTURES\27C17\CBR27C17-BRG-ABT-001.dwg By: brad.wodash

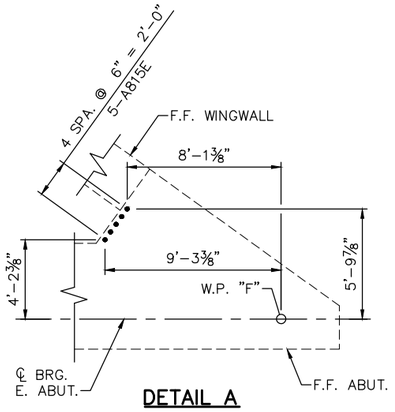

DETAIL A

NOTES:

F.F. DENOTES FRONT FACE.
B.F. DENOTES BACK FACE.
E.F. DENOTES EACH FACE.

SEE SHEET 15 FOR SECTION F-F.

SEE SHEET 18 FOR SECTION M-M.

(1) 15 SPA. @ 8" = 10'-0".

(2) 7 SPA. @ 1'-0" = 7'-0".

FOOTING PLAN

NO.	DATE	BY	CHECK	DESIGN	REVISION / SUBMITTAL

DESIGNED BY: BAW | CHECKED BY: BLF
DRAWN BY: PHH | CHECKED BY: BLF

90% SUBMISSION - 01/22/16

AECOM Kimley»Horn

METROPOLITAN COUNCIL

SOUTHWEST Green Line LRT Extension

CIVIL - VOLUME 4G
CSAH (GLENWOOD AVENUE) - EAST
BRIDGE 27C17
EAST ABUTMENT REINFORCEMENT 2

DISCIPLINE: STRUCTURES
SHEET NAME: CBR27C17-BRG-ABT-001-9

SHEET 12 OF 71

Jan, 18 2016 09:19 am V:\3400_ADC\CAD\SEGMENT E4\PLAN SHEETS\STRUCTURES\27C17\CBR27C17-BRG-ABT-001.dwg By: brad.wodash

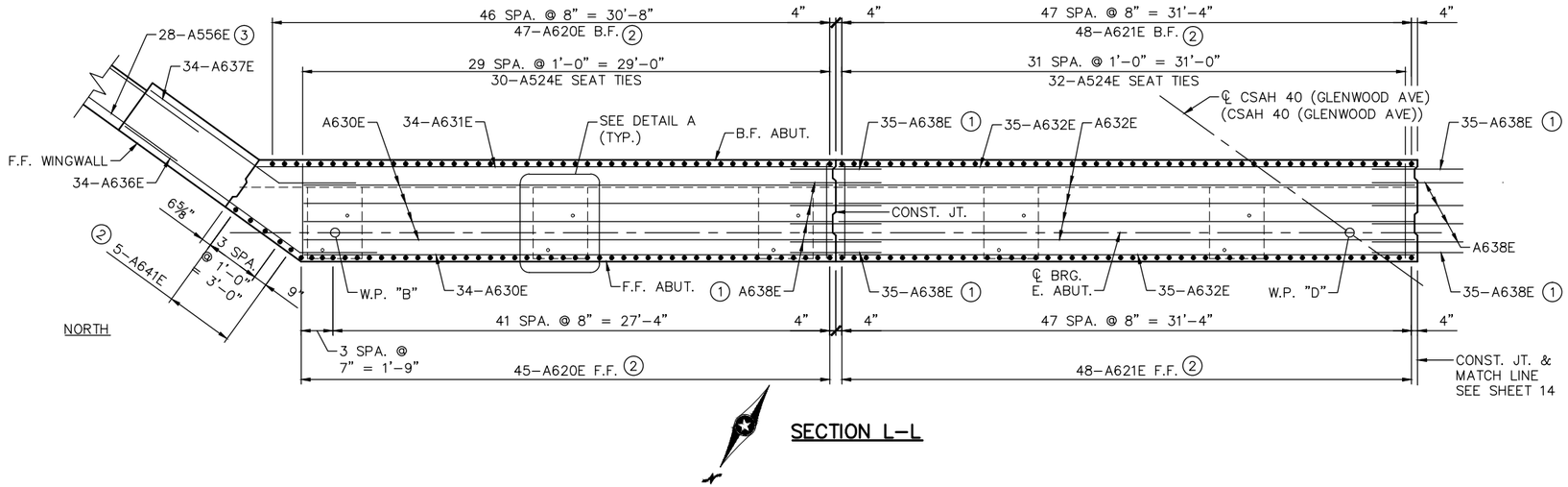

SECTION L-L

NOTES:

F.F. DENOTES FRONT FACE.
B.F. DENOTES BACK FACE.
E.F. DENOTES EACH FACE.

SEE SHEET 15 FOR SECTION F-F & K-K.

SEE THIS SHEET FOR SECTION L-L.

SEE SHEET 16 FOR NORTHEAST WINGWALL REINFORCEMENT DETAILS.

(1) SPACED WITH HORIZONTAL REINFORCEMENT.

(2) SPACED WITH FOOTING DOWELS.

(3) 2'-11" PROJECTION REQUIRED INTO ADJACENT CONCRETE SECTION. BACKFACE DOWEL BARS SHALL BE SPACED WITH HORIZONTAL WINGWALL FRONT FACE AND BACK FACE BARS.

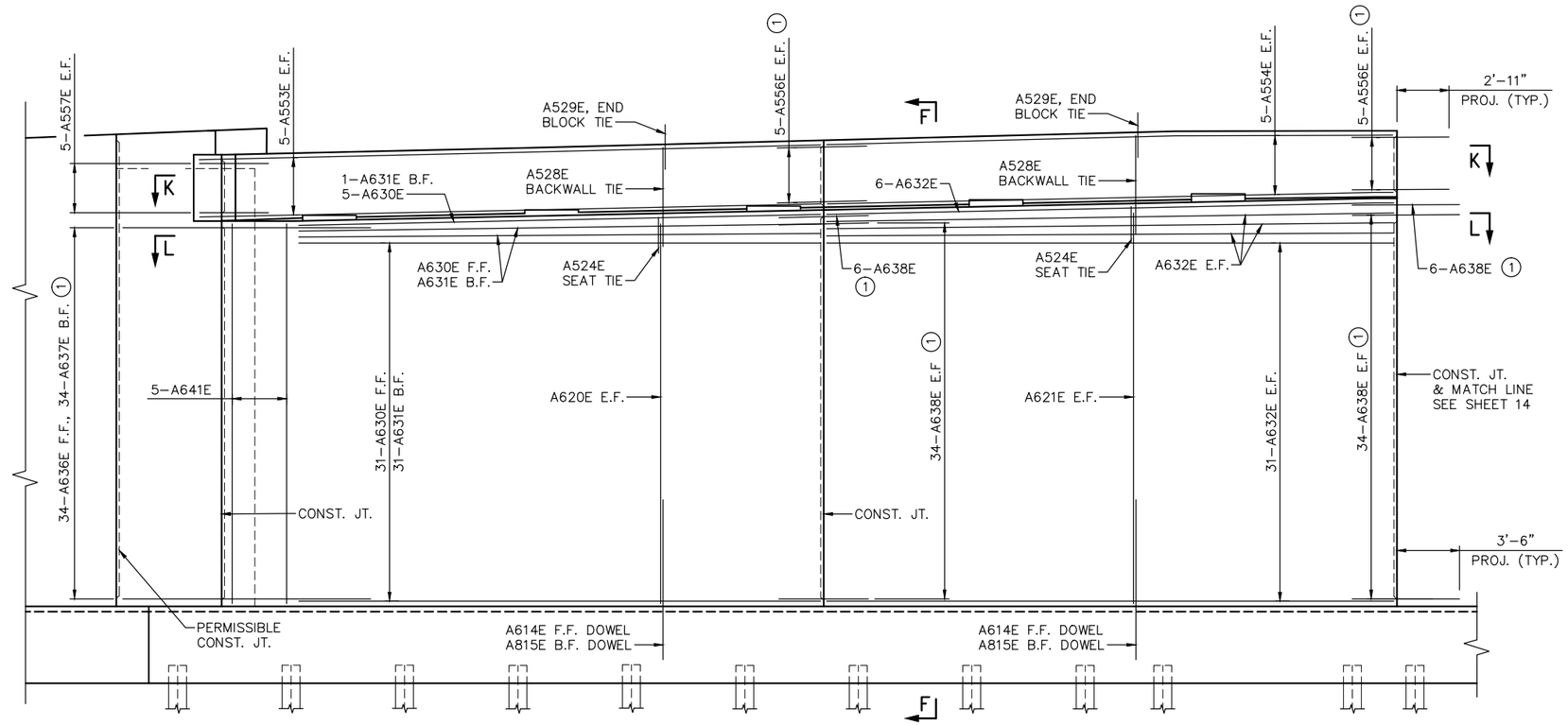

PARTIAL ELEVATION

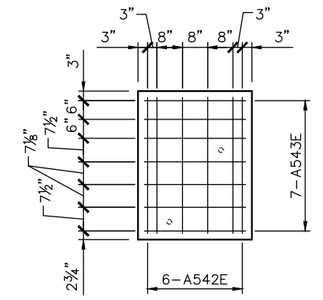

DETAIL A

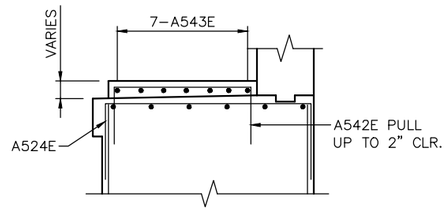

SECTION THRU PAD

NO.	DATE	BY	CHECK	DESIGN	REVISION / SUBMITTAL

DESIGNED BY: BAW | CHECKED BY: BLF
DRAWN BY: PHH | CHECKED BY: BLF

AECOM Kimley»Horn

90% SUBMISSION - 01/22/16

METROPOLITAN COUNCIL

SOUTHWEST Green Line LRT Extension

CIVIL - VOLUME 4G
CSAH 40 (GLENWOOD AVENUE) - EAST
BRIDGE 27C17
EAST ABUTMENT REINFORCEMENT 3

DISCIPLINE: STRUCTURES
SHEET NAME: CBR27C17-BRG-ABT-001-10

SHEET 13 OF 71

Jan. 18 2016 09:19 am V:\3400_ADC\CAD\SEGMENT E4\PLAN SHEETS\STRUCTURES\27C17\CBR27C17-BRG-ABT-001.dwg By: brad.wodash

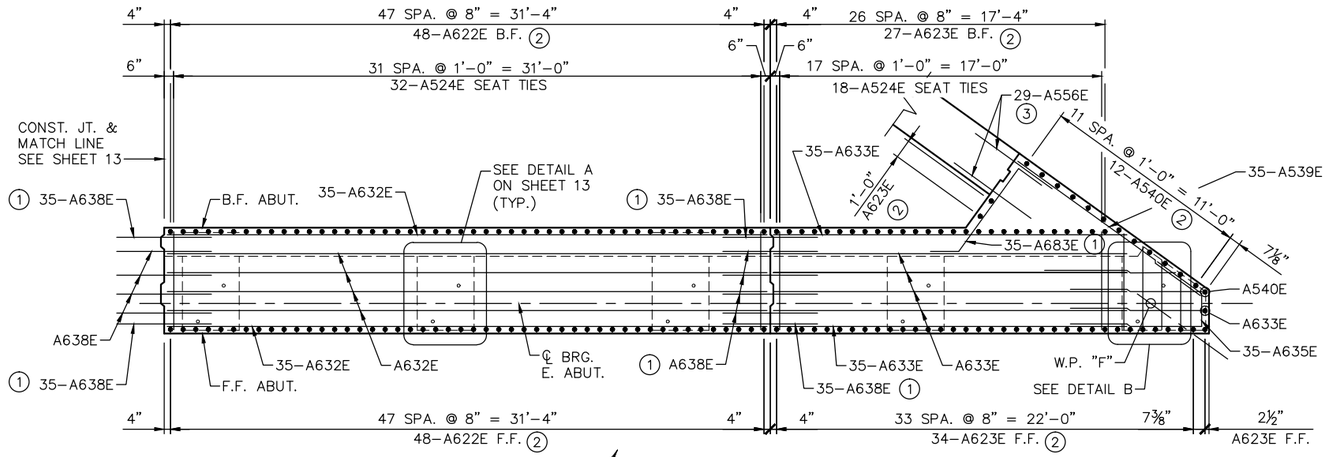

SECTION L-L

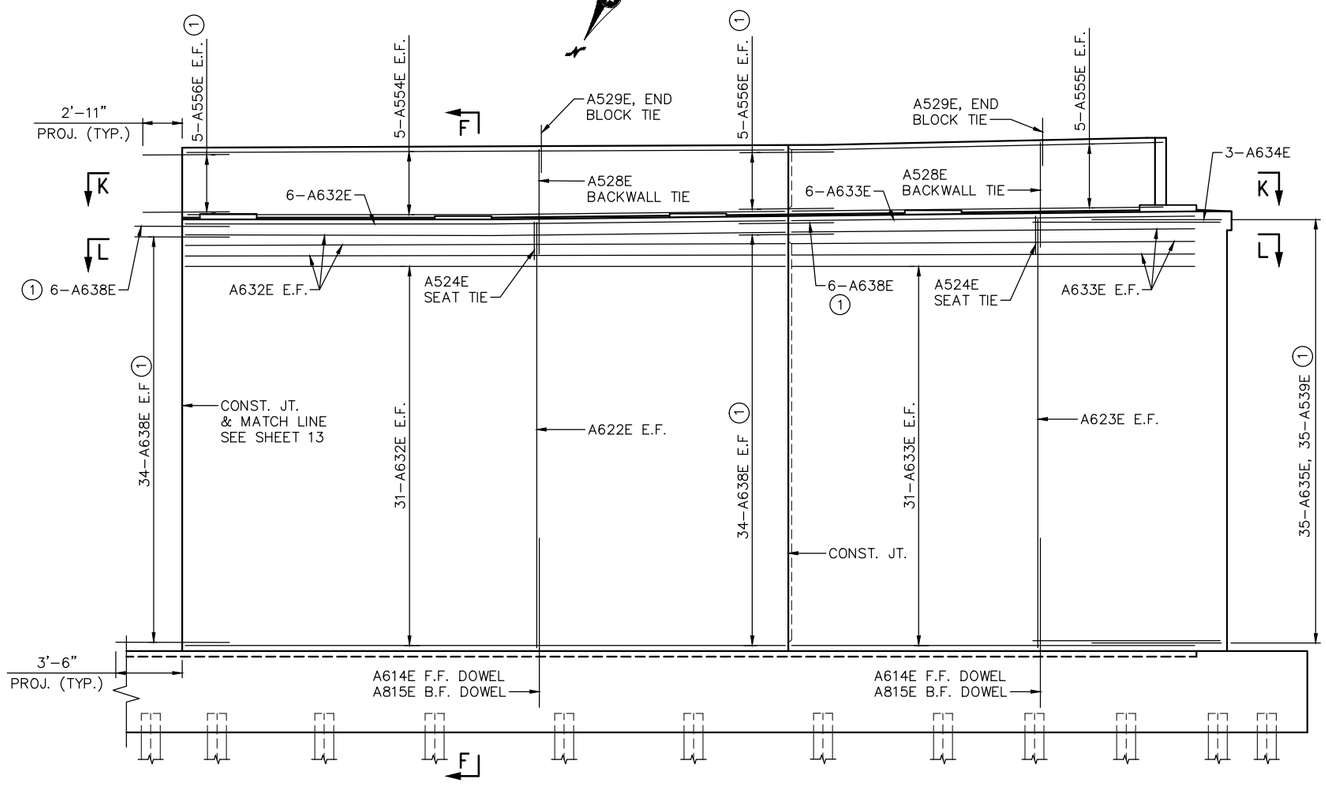

PARTIAL ELEVATION

NOTES:

F.F. DENOTES FRONT FACE.
B.F. DENOTES BACK FACE.
E.F. DENOTES EACH FACE.

SEE SHEET 15 FOR SECTION F-F & K-K.

SEE THIS SHEET FOR SECTION L-L.

SEE SHEET 18 FOR SOUTHEAST REINFORCEMENT DETAILS.

(1) SPACED WITH HORIZONTAL REINFORCEMENT.

(2) SPACED WITH FOOTING DOWELS.

(3) 2'-11" PROJECTION REQUIRED INTO ADJACENT CONCRETE SECTION. BACK FACE DOWEL BARS SHALL BE SPACED WITH HORIZONTAL WINGWALL FRONT FACE AND BACK FACE BARS.

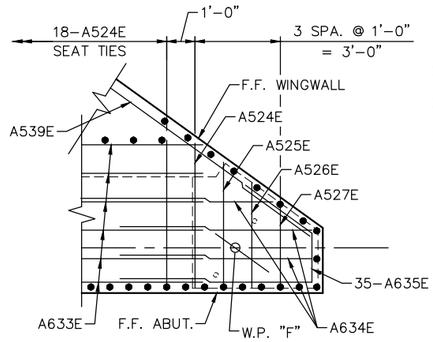

SOUTH END DETAIL

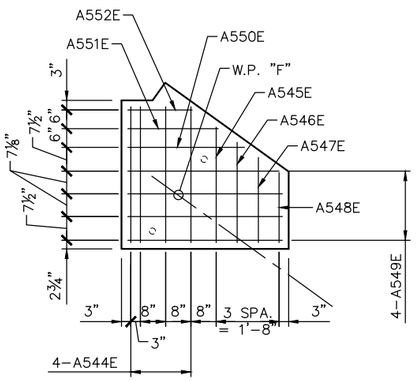

DETAIL B

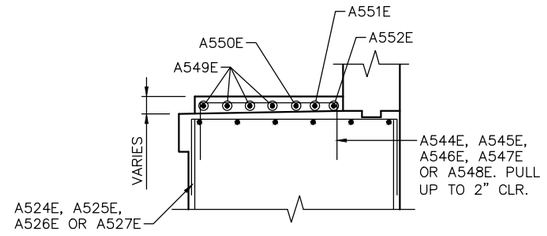

SECTION THRU PAD
(@ DETAIL B)

NO.	DATE	BY	CHECK	DESIGN	REVISION / SUBMITTAL

DESIGNED BY: BAW CHECKED BY: BLF
DRAWN BY: PHH CHECKED BY: BLF

AECOM Kimley»Horn

90% SUBMISSION - 01/22/16

METROPOLITAN COUNCIL

SOUTHWEST Green Line LRT Extension

CIVIL - VOLUME 4G
CSAH 40 (GLENWOOD AVENUE) - EAST
BRIDGE 27C17
EAST ABUTMENT REINFORCEMENT 4

DISCIPLINE: STRUCTURES
SHEET NAME: CBR27C17-BRG-ABT-001-11

SHEET 14 OF 71

Jan. 18 2016 09:19 am V:\3400_ADC\CAD\SEGMENT E4\PLAN SHEETS\STRUCTURES\27C17\CBR27C17-BRG-ABT-001.dwg By: brad.wodash

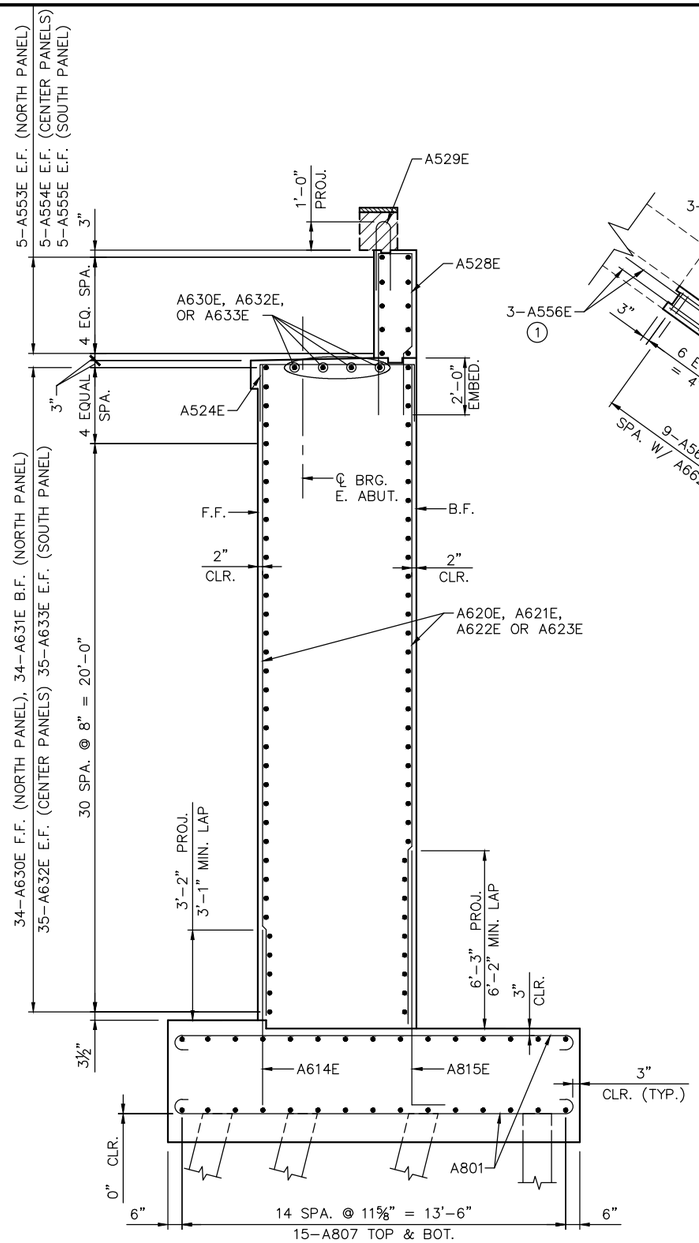

SECTION F-F

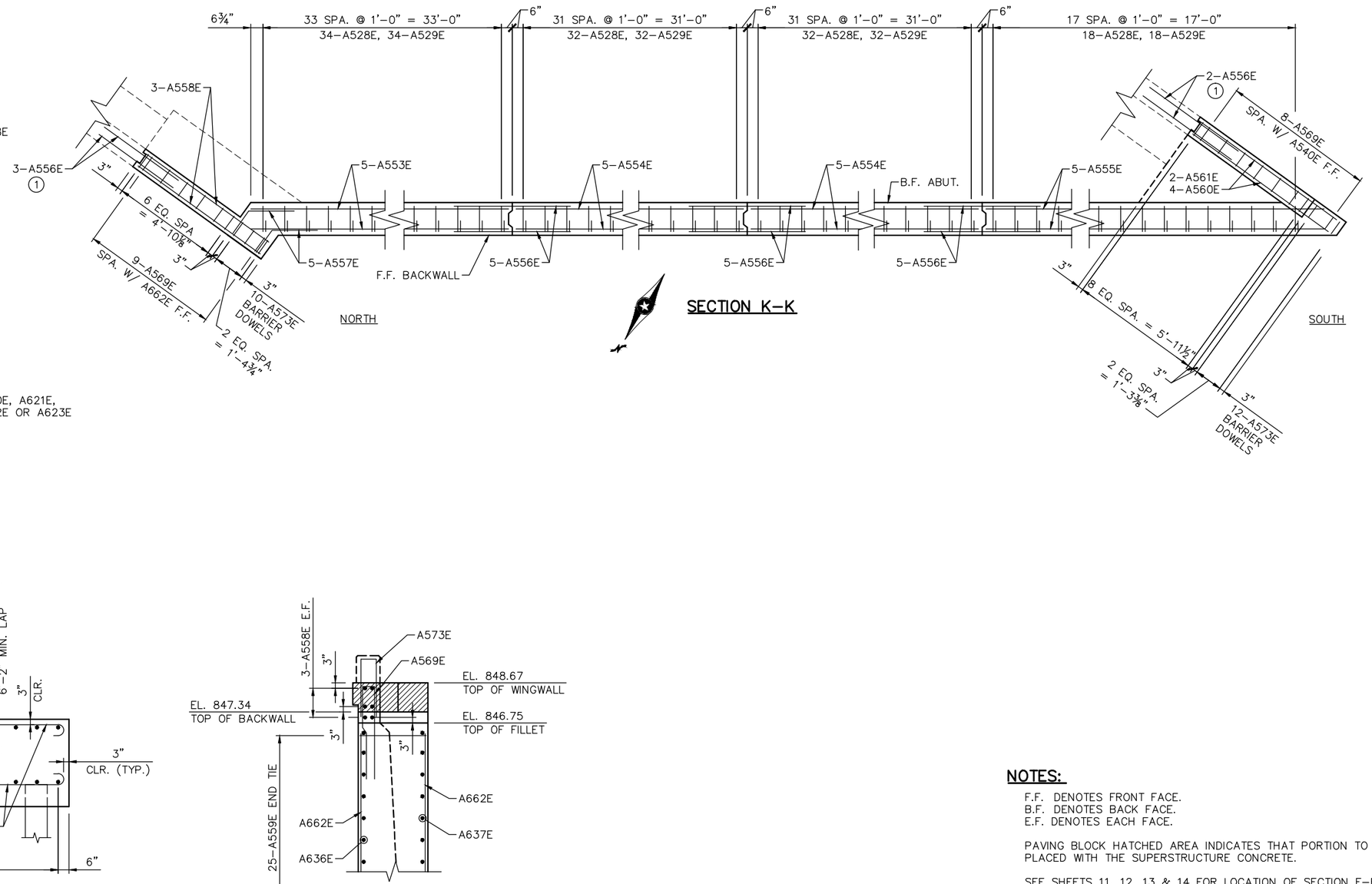

SECTION N-N

NOTES:

F.F. DENOTES FRONT FACE.
B.F. DENOTES BACK FACE.
E.F. DENOTES EACH FACE.

PAVING BLOCK HATCHED AREA INDICATES THAT PORTION TO BE PLACED WITH THE SUPERSTRUCTURE CONCRETE.

SEE SHEETS 11, 12, 13 & 14 FOR LOCATION OF SECTION F-F.

SEE SHEET 16 FOR LOCATION OF SECTION N-N.

① 2'-11" PROJECTION REQUIRED INTO ADJACENT CONCRETE SECTION. BACK FACE DOWEL BARS SHALL BE SPACED WITH HORIZONTAL WINGWALL FRONT FACE AND BACK FACE BARS.

NO.	DATE	BY	CHECK	DESIGN	REVISION / SUBMITTAL

DESIGNED BY: BAW CHECKED BY: BLF
DRAWN BY: PHH CHECKED BY: BLF

AECOM Kimley»Horn

90% SUBMISSION - 01/22/16

METROPOLITAN COUNCIL

SOUTHWEST Green Line LRT Extension

CIVIL - VOLUME 4G
CSAH 40 (GLENWOOD AVENUE) - EAST
BRIDGE 27C17
EAST ABUTMENT REINFORCEMENT 5

DISCIPLINE: STRUCTURES
SHEET NAME: CBR27C17-BRG-ABT-001-12

SHEET 15 OF 71

Jan, 18 2016 09:19 am V:\3400_ADC\CAD\SEGMENT E4\PLAN SHEETS\STRUCTURES\27C17\CBR27C17-BRG-ABT-001.dwg By: brad.wodash

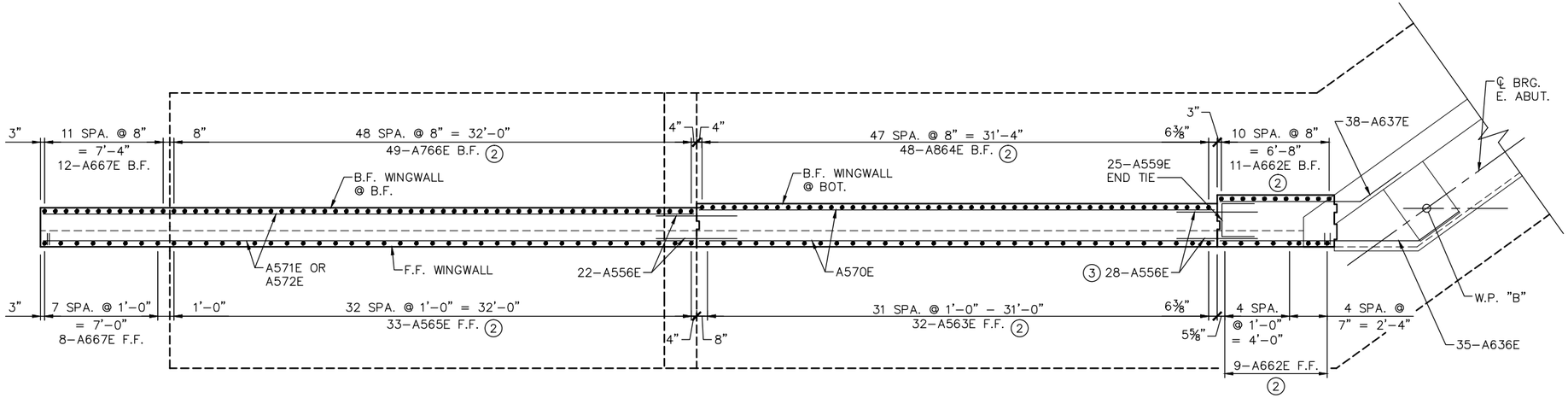

NORTHEAST WINGWALL PLAN

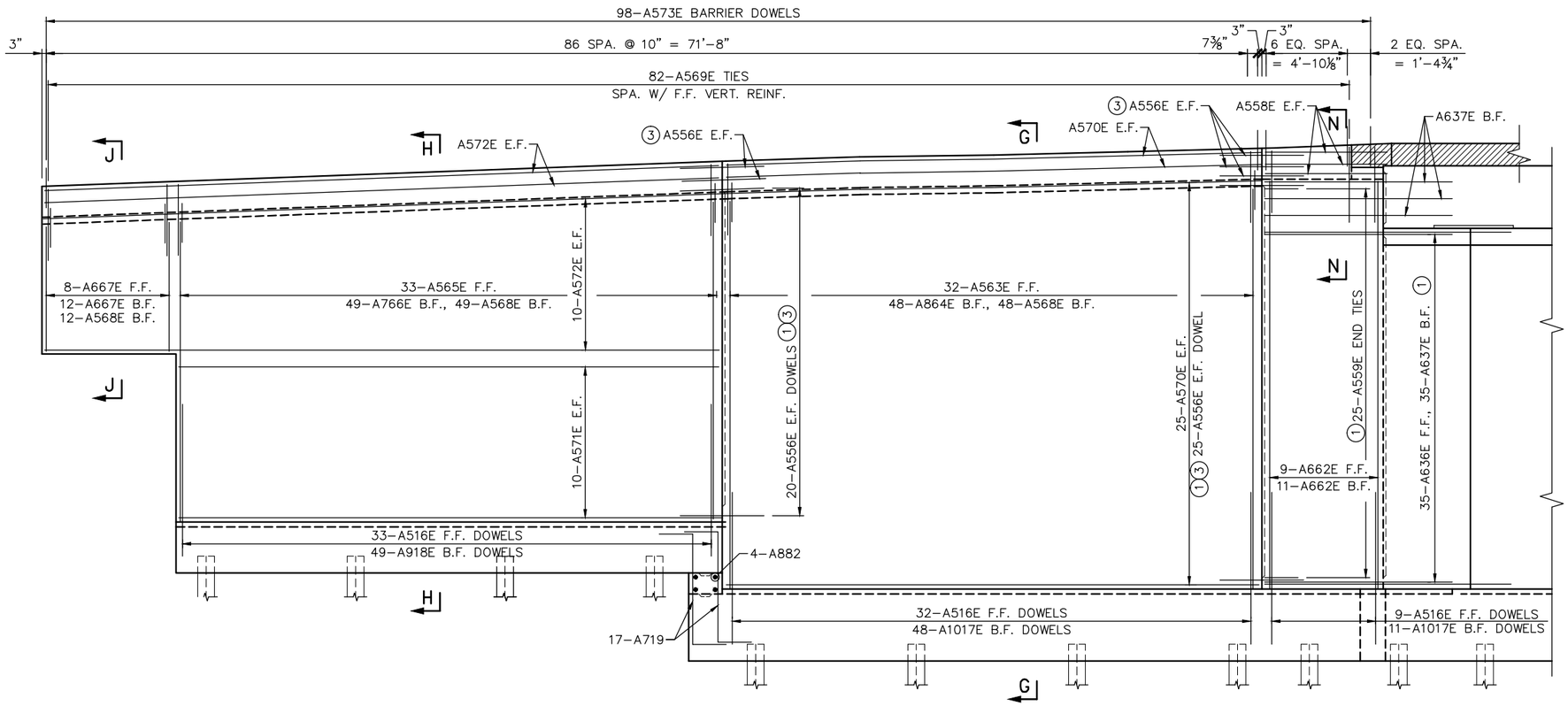

NORTHEAST WINGWALL ELEVATION

NOTES:

F.F. DENOTES FRONT FACE.
B.F. DENOTES BACK FACE.
E.F. DENOTES EACH FACE.

PAVING BLOCK HATCHED AREA INDICATES THAT PORTION TO BE PLACED WITH THE SUPERSTRUCTURE CONCRETE.

SEE SHEET 17 FOR SECTIONS G-G, H-H & J-J.

SEE SHEET 15 FOR SECTION N-N.

CONCRETE CURB NOT SHOWN ON THIS SHEET FOR CLARITY.

(1) SPACED WITH HORIZONTAL REINFORCEMENT.

(2) SPACED WITH FOOTING DOWELS.

(3) 2'-11" PROJECTION REQUIRED INTO ADJACENT CONCRETE SECTION. BACK FACE DOWEL BARS SHALL BE SPACED WITH HORIZONTAL WINGWALL FRONT FACE AND BACK FACE BARS.

NO.	DATE	BY	CHECK	DESIGN	REVISION / SUBMITTAL

DESIGNED BY: BLF | CHECKED BY: MDJ
DRAWN BY: PHH | CHECKED BY: BLF

AECOM Kimley»Horn

90% SUBMISSION - 01/22/16

METROPOLITAN COUNCIL

SOUTHWEST Green Line LRT Extension

CIVIL - VOLUME 4G
CSAH 40 (GLENWOOD AVENUE) - EAST
BRIDGE 27C17
EAST ABUTMENT REINFORCEMENT 6

DISCIPLINE: STRUCTURES
SHEET NAME: CBR27C17-BRG-ABT-001-13

SHEET 16 OF 71

Jan, 18 2016 09:19 am V:\3400_ADC\CAD\SEGMENT E4\PLAN SHEETS\STRUCTURES\27C17\CBR27C17-BRG-ABT-001.dwg By: brad.wodash

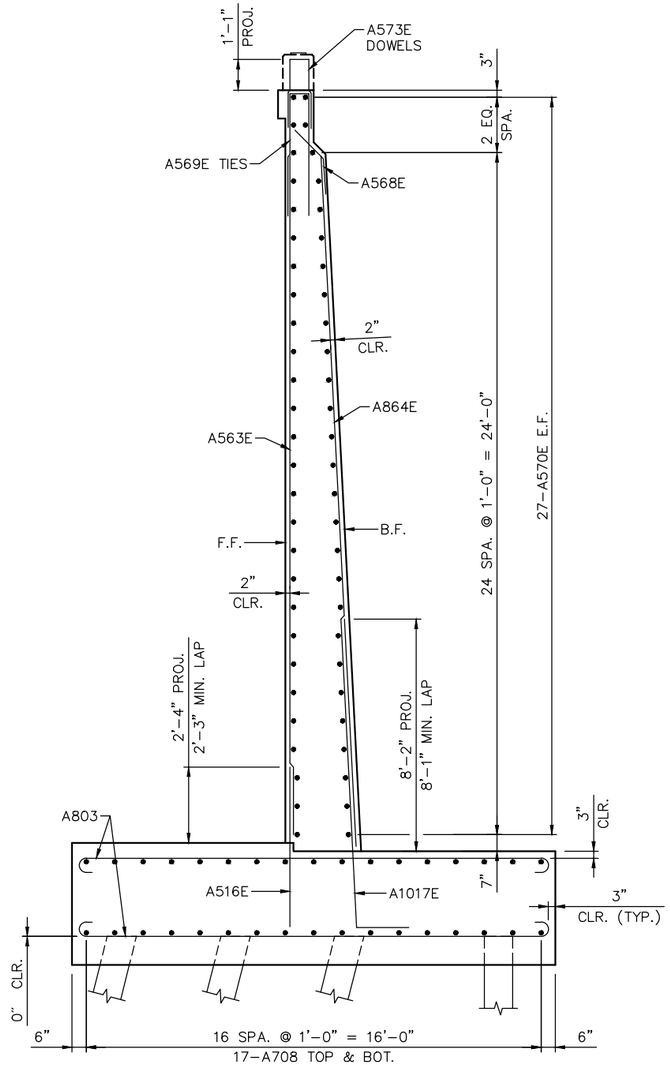

SECTION G-G

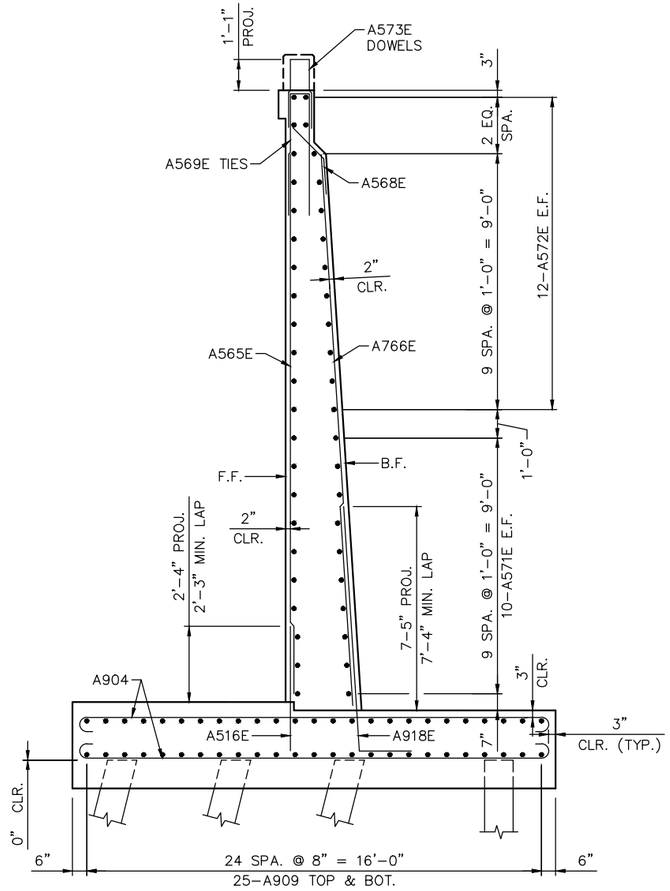

SECTION H-H

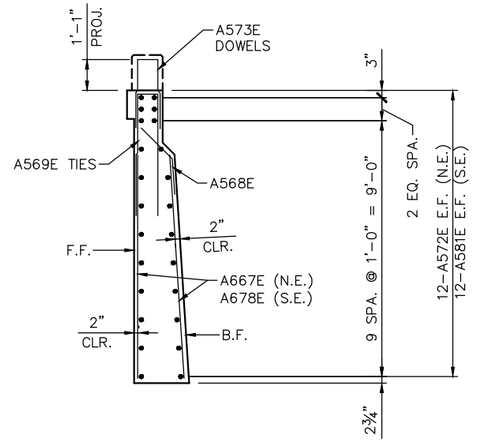

SECTION J-J

NOTES:

F.F. DENOTES FRONT FACE.
B.F. DENOTES BACK FACE.
E.F. DENOTES EACH FACE.

SEE SHEET 16 FOR LOCATION OF SECTIONS G-G, H-H & J-J.

NO.	DATE	BY	CHECK	DESIGN	REVISION / SUBMITTAL

DESIGNED BY: BLF | CHECKED BY: MDJ
DRAWN BY: PHH | CHECKED BY: BLF

AECOM Kimley»Horn

90% SUBMISSION - 01/22/16

METROPOLITAN COUNCIL

SOUTHWEST Green Line LRT Extension

CIVIL - VOLUME 4G
CSAH 40 (GLENWOOD AVENUE) - EAST
BRIDGE 27C17
EAST ABUTMENT REINFORCEMENT 7

DISCIPLINE: STRUCTURES
SHEET NAME: CBR27C17-BRG-ABT-001-14

SHEET 17 OF 71

Jan, 18 2016 09:19 am V:\3400_ADC\CAD\SEGMENT E4\PLAN SHEETS\STRUCTURES\27C17\CBR27C17-BRG-ABT-001.dwg By: brad.wodash

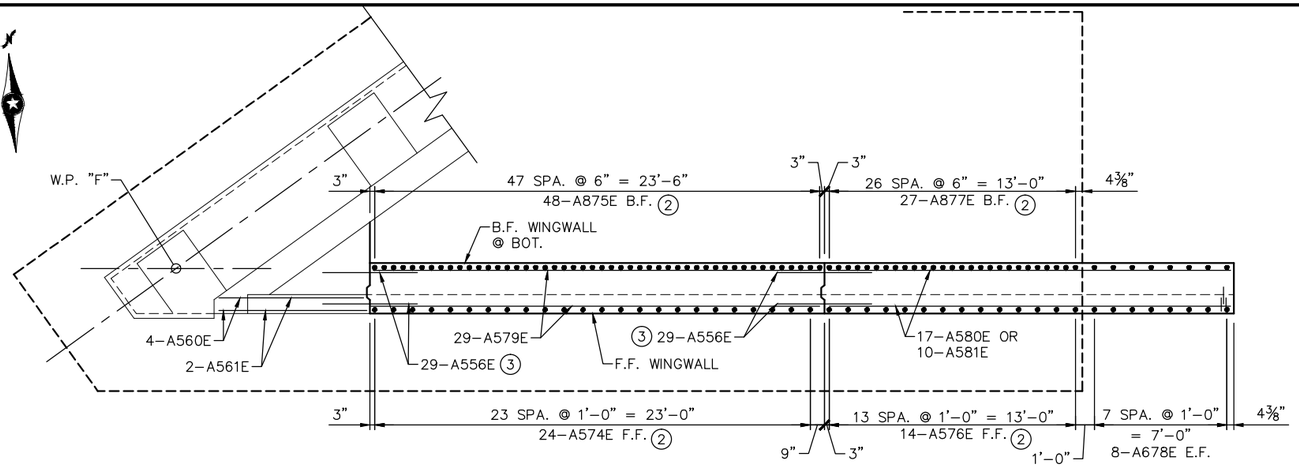

SOUTHEAST WINGWALL PLAN

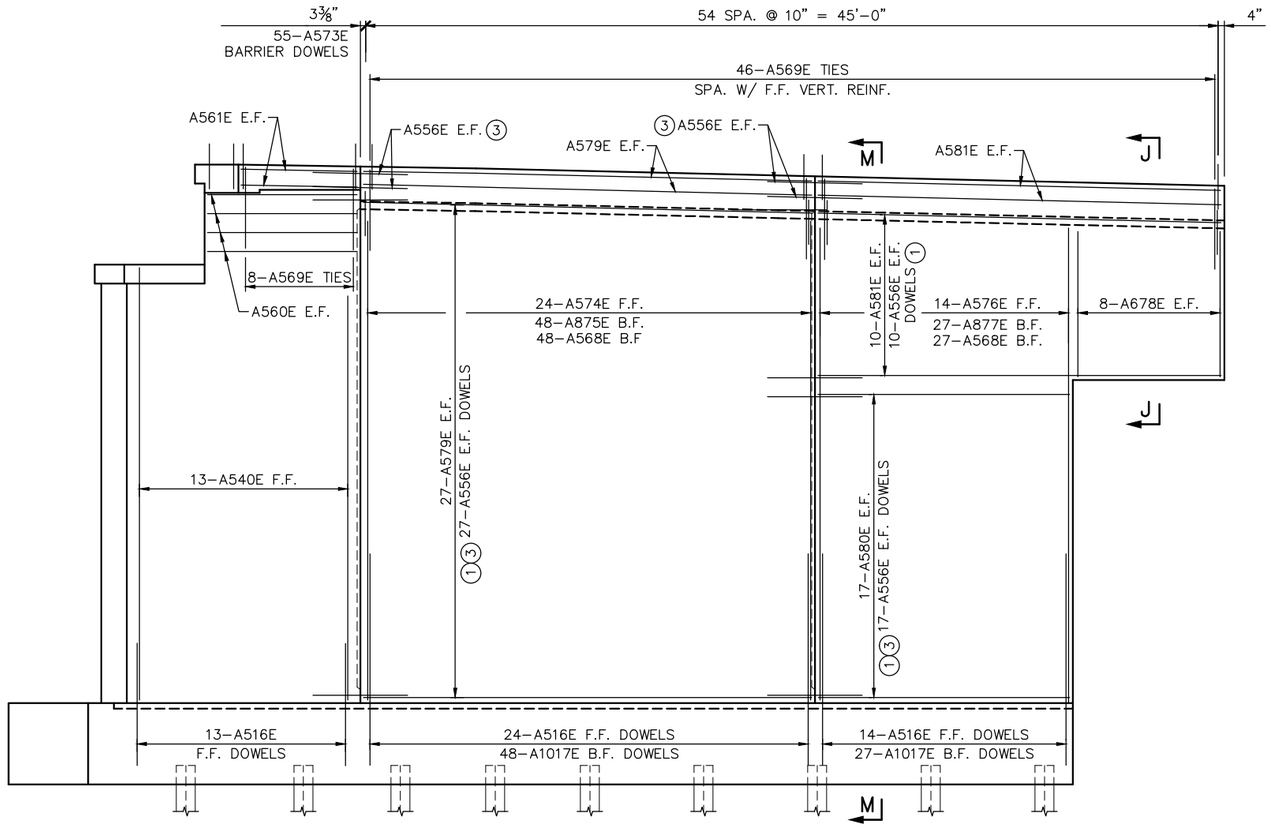

SOUTHEAST WINGWALL ELEVATION

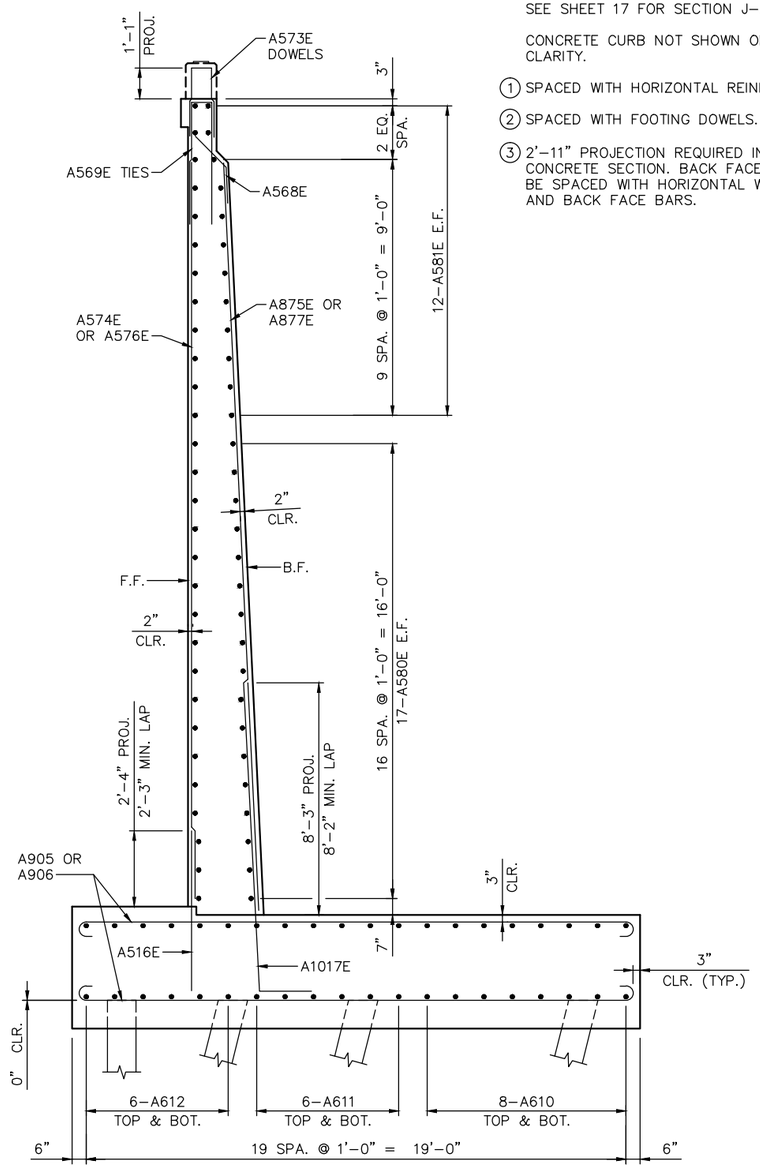

SECTION M-M

NOTES:

F.F. DENOTES FRONT FACE.
B.F. DENOTED BACK FACE.
E.F. DENOTES EACH FACE.

SEE SHEET 17 FOR SECTION J-J.

CONCRETE CURB NOT SHOWN ON THIS SHEET FOR CLARITY.

(1) SPACED WITH HORIZONTAL REINFORCEMENT.

(2) SPACED WITH FOOTING DOWELS.

(3) 2'-11" PROJECTION REQUIRED INTO ADJACENT CONCRETE SECTION. BACK FACE DOWEL BARS SHALL BE SPACED WITH HORIZONTAL WINGWALL FRONT FACE AND BACK FACE BARS.

NO.	DATE	BY	CHECK	DESIGN	REVISION / SUBMITTAL

DESIGNED BY: BLF | CHECKED BY: MDJ
DRAWN BY: PHH | CHECKED BY: BLF

AECOM Kimley»Horn

90% SUBMISSION - 1/22/16

METROPOLITAN COUNCIL

SOUTHWEST Green Line LRT Extension

CIVIL - VOLUME 4G
CSAH 40 (GLENWOOD AVENUE) - EAST
BRIDGE 27C17
EAST ABUTMENT REINFORCEMENT 8

DISCIPLINE: STRUCTURES
SHEET NAME: CBR27C17-BRG-ABT-001-15

SHEET 18 OF 71

Jan. 18 2016 09:19 am v:\3400_ADC\CAD\SEGMENT E4\PLAN SHEETS\STRUCTURES\27C17\CBR27C17-BRG-ABT-001.dwg By: brad.wodash

BILL OF REINFORCEMENT FOR EAST ABUTMENT

BAR	NO.	LENGTH	SHAPE	LOCATION
A801	0	'-"	BENT	FOOTING, TRANS. TOP & BOT.
A802	X SER. OF X	X'-XX" TO X'-XX"	BENT	FOOTING, TRANS. TOP & BOT.
A803	0	'-"	BENT	FOOTING, TRANS. TOP & BOT.
A904	0	'-"	BENT	FOOTING, TRANS. TOP & BOT.
A905	0	'-"	BENT	FOOTING, TRANS. TOP & BOT.
A906	X SER. OF X	X'-XX" TO X'-XX"	BENT	FOOTING, TRANS. TOP & BOT.
A807	0	'-"	STR.	FOOTING, LONG. TOP & BOT.
A708	0	'-"	STR.	FOOTING, LONG. TOP & BOT.
A909	0	'-"	STR.	FOOTING, LONG. TOP & BOT.
A610	0	'-"	STR.	FOOTING, LONG. TOP & BOT.
A611	0	'-"	STR.	FOOTING, LONG. TOP & BOT.
A612	0	'-"	STR.	FOOTING, LONG. TOP & BOT.
A713	0	'-"	STR.	FOOTING, TOP & BOT.
A614E	0	'-"	STR.	FOOTING, F.F. DOWELS
A815E	0	'-"	BENT	FOOTING, B.F. DOWELS
A516E	0	'-"	STR.	FOOTING, F.F. DOWELS
A1017E	0	'-"	BENT	FOOTING, B.F. DOWELS
A918E	0	'-"	BENT	FOOTING, B.F. DOWELS
A719	0	'-"	BENT	FOOTING STEP, VERT. E.F.
A720E	0	'-"	STR.	STEM, VERT. E.F.
A721E	0	'-"	STR.	STEM, VERT. E.F.
A722E	0	'-"	STR.	STEM, VERT. E.F.
A723E	0	'-"	STR.	STEM, VERT. F.F.
A524E	0	'-"	BENT	BEAM SEAT TIE
A525E	0	'-"	BENT	BEAM SEAT TIE
A526E	0	'-"	BENT	BEAM SEAT TIE
A527E	0	'-"	BENT	BEAM SEAT TIE
A528E	0	'-"	BENT	BACKWALL TIE
A529E	0	'-"	BENT	END BLOCK TIE
A630E	0	'-"	STR.	STEM, HORIZ. F.F.
A631E	0	'-"	STR.	STEM, HORIZ. B.F.
A632E	0	'-"	STR.	STEM, HORIZ. E.F.
A633E	0	'-"	STR.	STEM, HORIZ. E.F.
A634E	0	'-"	STR.	STEM, HORIZ.
A635E	0	'-"	BENT	STEM, HORIZ. TIE
A636E	0	'-"	BENT	STEM, HORIZ. F.F.
A637E	0	'-"	BENT	STEM, HORIZ. B.F.
A638E	0	'-"	STR.	STEM, HORIZ. E.F.
A539E	0	'-"	STR.	STEM, HORIZ. B.F.
A540E	0	'-"	STR.	STEM, VERT. B.F.

BILL OF REINFORCEMENT FOR EAST ABUTMENT

BAR	NO.	LENGTH	SHAPE	LOCATION
A541E	0	'-"	STR.	STEM, VERT. F.F.
A542E	0	'-"	BENT	BEAM SEAT TIE
A543E	0	'-"	BENT	BEAM SEAT TIE
A544E	0	'-"	BENT	BEAM SEAT TIE
A545E	0	'-"	BENT	BEAM SEAT TIE
A546E	0	'-"	BENT	BEAM SEAT TIE
A547E	0	'-"	BENT	BEAM SEAT TIE
A548E	0	'-"	BENT	BEAM SEAT TIE
A549E	0	'-"	BENT	BEAM SEAT TIE
A550E	0	'-"	BENT	BEAM SEAT TIE
A551E	0	'-"	BENT	BEAM SEAT TIE
A552E	0	'-"	BENT	BEAM SEAT TIE
A553E	0	'-"	STR.	BACKWALL, HORIZ. E.F.
A554E	0	'-"	STR.	BACKWALL, HORIZ. E.F.
A555E	0	'-"	STR.	BACKWALL, HORIZ. E.F.
A556E	0	'-"	STR.	HORIZ.
A557E	0	'-"	BENT	BACKWALL, HORIZ. E.F.
A558E	0	'-"	STR.	NE WW, HORIZ.
A559E	0	'-"	BENT	NE WW, HORIZ. TIE
A560E	0	'-"	STR.	SE WW, HORIZ.
A561E	0	'-"	STR.	SE WW, HORIZ.
A662E	0	'-"	STR.	NE WW, VERT.
A563E	0	'-"	STR.	NE WW, VERT. F.F.
A864E	0	'-"	STR.	NE WW, VERT. B.F.
A565E	0	'-"	STR.	NE WW, VERT. F.F.
A766E	0	'-"	STR.	NE WW, VERT. B.F.
A667E	0	'-"	STR.	NE WW, VERT. E.F.
A568E	0	'-"	BENT	NW & SE WW, VERT. B.F.
A569E	0	'-"	BENT	NW & SE WW, VERT. TIE
A570E	0	'-"	STR.	NE WW, HORIZ. E.F.
A571E	0	'-"	STR.	NE WW, HORIZ. E.F.
A572E	0	'-"	STR.	NE WW, HORIZ. E.F.
A573E	0	'-"	BENT	NE & SE WW, CURB DOWEL
A574E	0	'-"	STR.	SE WW, VERT. F.F.
A875E	0	'-"	STR.	SE WW, VERT. B.F.
A576E	0	'-"	STR.	SE WW, VERT. F.F.
A877E	0	'-"	STR.	SE WW, VERT. B.F.
A678E	0	'-"	STR.	SE WW, VERT. E.F.
A579E	0	'-"	STR.	SE WW, HORIZ. E.F.
A580E	0	'-"	STR.	SE WW, HORIZ. E.F.
A581E	0	'-"	STR.	SE WW, HORIZ. E.F.

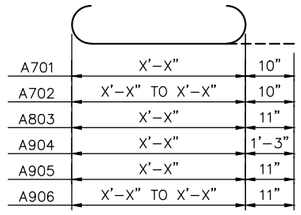

A701, A702, A803, A904, A905 & A906

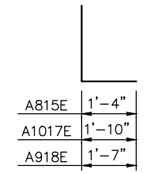

A815E, A1017E, & A918E

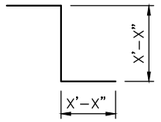

A719

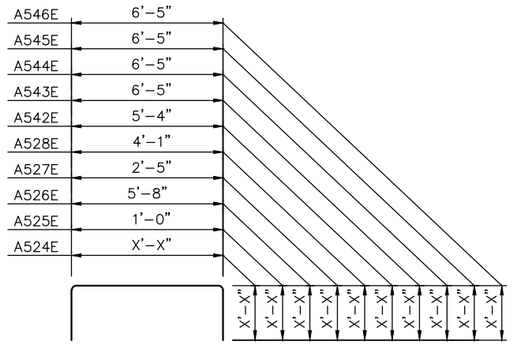

A524E, A525E, A526E, A527E, A528E, A542E, A543E, A544E, A545E, & A546E

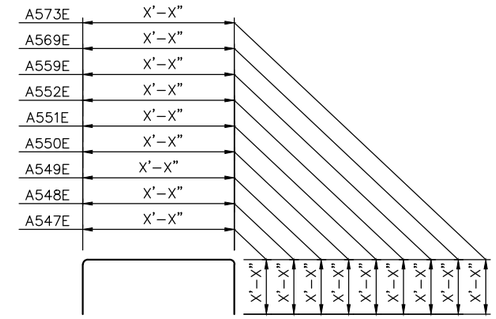

A547E, A548E, A549E, A550E, A551E, A552E, A559E, A569E, & A573E

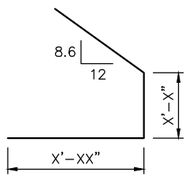

A635E

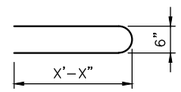

A529E

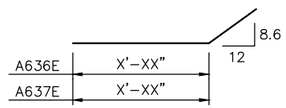

A635E, & A637E

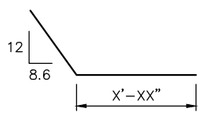

A557E

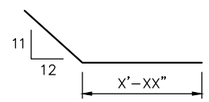

A568E

NO.	DATE	BY	CHECK	DESIGN	REVISION / SUBMITTAL

DESIGNED BY: BAW | CHECKED BY: BLF
DRAWN BY: LMT | CHECKED BY: BLF

AECOM Kimley»Horn

90% SUBMISSION - 01/22/16

METROPOLITAN COUNCIL

SOUTHWEST Green Line LRT Extension

CIVIL - VOLUME 4G
CSAH 40 (GLENWOOD AVENUE) - EAST
BRIDGE 27C17
EAST ABUTMENT REINFORCEMENT 9

DISCIPLINE: STRUCTURES
SHEET NAME: CBR27C17-BRG-ABT-001-16

SHEET 19 OF 71

Jan, 18 2016 09:19 am V:\3400_ADC\CAD\SEGMENT E4\PLAN SHEETS\STRUCTURES\27C17\CBR27C17-BRG-ABT-001.dwg By: brad.wodash

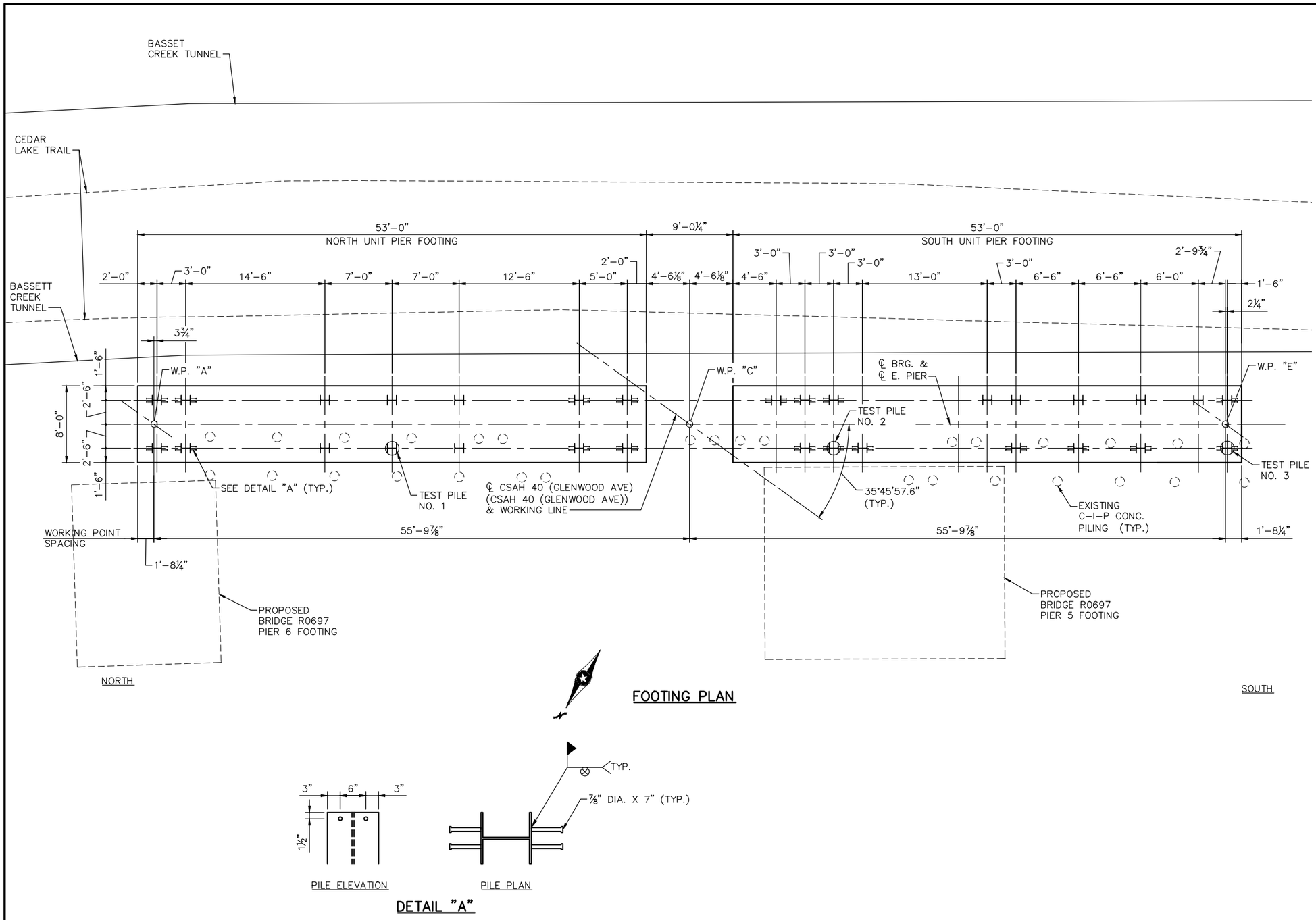

FOOTING PLAN

PILE ELEVATION

PILE PLAN

DETAIL "A"

EAST PIER COMPUTED PILE LOAD - TONS/PILE	
FACTORED DEAD LOAD	45.2
FACTORED LIVE LOAD	13.5
FACTORED OVERTURNING	53.6
* FACTORED DESIGN LOAD	112.3

* BASED ON STRENGTH I LOAD COMBINATION.

EAST PIER REQUIRED NOMINAL PILE BEARING RESISTANCE FOR H-PILES Rn - TONS/PILE		
FIELD CONTROL METHOD	φdyn	* Rn
MN/DOT PILE FORMULA 2012 (MPF12) $R_n = 20\sqrt{\frac{W\,x\,H}{1000}}\,x log\left(\frac{10}{S}\right)$	0.60	188
PDA	0.65	173

* Rn = (FACTORED DESIGN LOAD) / φdyn

GENERAL PILE NOTES

3 STEEL H-TEST PILES 60 FT. LONG
27 STEEL H-PILES EST. LENGTH 50 FT.
30 STEEL H-PILES REQ'D FOR EAST PIER

PIER PILES ARE TO BE HP12x53 WITH PILE TIP PROTECTION.

PILE SPACING SHOWN IS AT BOTTOM OF FOOTING.

FOR PILE SPLICE DETAILS SEE DETAIL B202.

PILES MARKED WITH STUDS ARE TO HAVE SHEAR STUDS PER DETAIL "A". ALL PILE SPLICES SHALL BE WELDED ON MARKED PILES.

ALL PIER PILES SHALL BE PRE-BORED TO EL. 785.0 PRIOR TO PILE DRIVING.

NO.	DATE	BY	CHECK	DESIGN	REVISION / SUBMITTAL

DESIGNED BY: RHK CHECKED BY: JBW
DRAWN BY: RHK CHECKED BY: BLF

AECOM Kimley»Horn

90% SUBMISSION - 01/22/16

METROPOLITAN COUNCIL

SOUTHWEST Green Line LRT Extension

CIVIL - VOLUME 4G
CSAH 40 (GLENWOOD AVENUE) - EAST
BRIDGE 27C17
EAST PIER DETAILS 1

DISCIPLINE: STRUCTURES
SHEET NAME: CBR27C17-BRG-PIR-001-1

SHEET 20 OF 71

Jan 18 2016 09:20 am V:\3400_ADC\CAD\SEGMENT E4\PLAN SHEETS\STRUCTURES\27C17\CBR27C17-BRG-PIR-001.dwg By: brad.wodash

NOTES:

(1) DIMENSION MEASURED ALONG ℄ EAST PIER

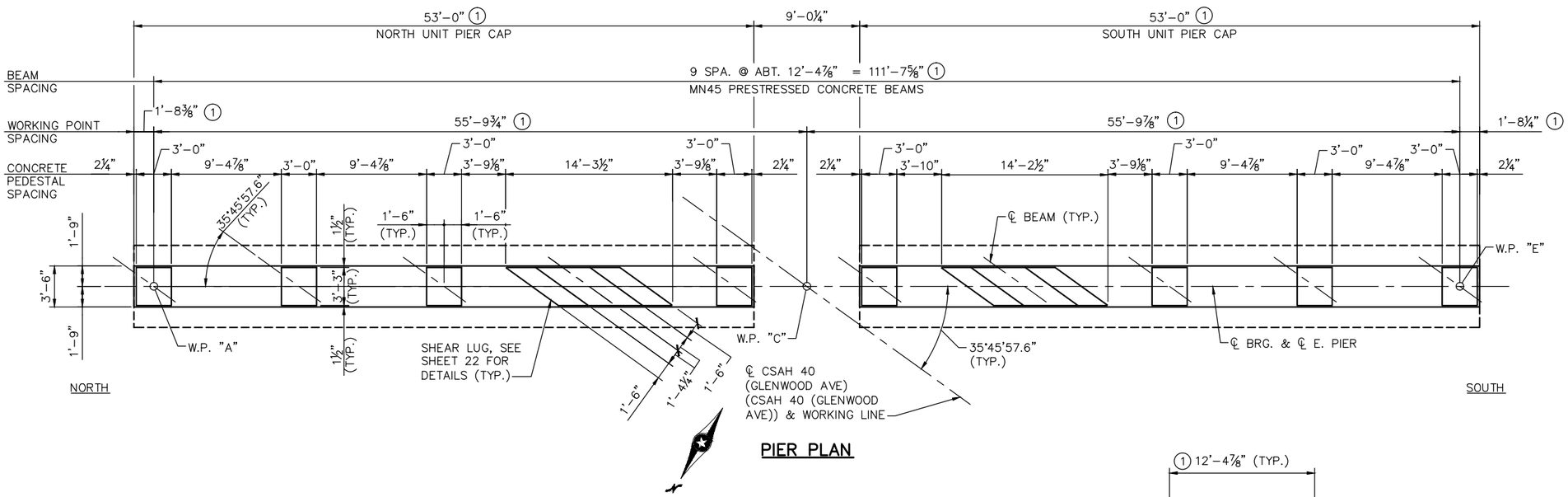

PIER PLAN

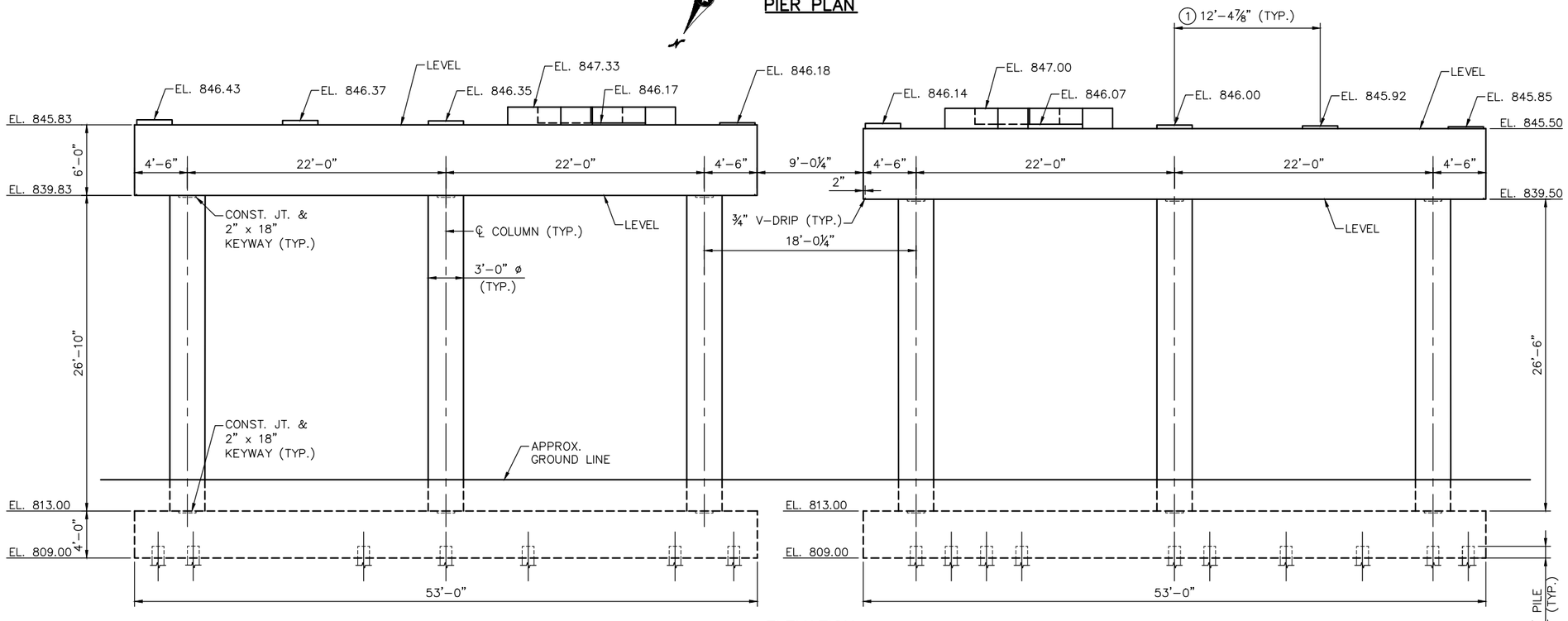

ELEVATION

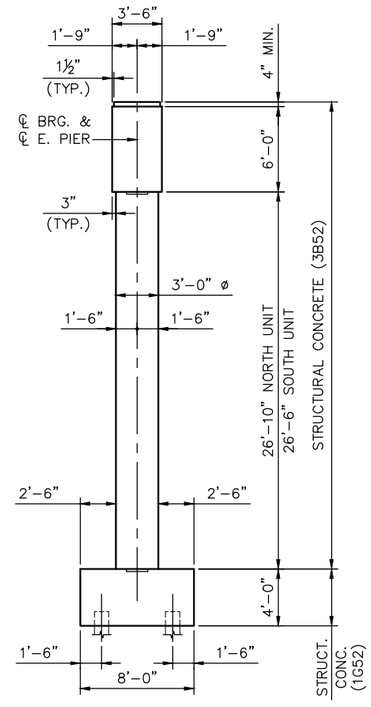

END ELEVATION

NO.	DATE	BY	CHECK	DESIGN	REVISION / SUBMITTAL

DESIGNED BY: RHK | CHECKED BY: JBW
DRAWN BY: RHK | CHECKED BY: BLF

AECOM Kimley»Horn

90% SUBMISSION - 01/22/16

METROPOLITAN COUNCIL

SOUTHWEST Green Line LRT Extension

CIVIL - VOLUME 4G
CSAH 40 (GLENWOOD AVENUE) - EAST
BRIDGE 27C17
EAST PIER DETAILS 2

DISCIPLINE: STRUCTURES
SHEET NAME: CBR27C17-BRG-PIR-001-2

SHEET 21 OF 71

Jan, 18 2016 09:20 am V:\3400_ADC\CAD\SEGMENT E4\PLAN SHEETS\STRUCTURES\27C17\CBR27C17-BRG-PIR-001.dwg By: brad.wodash

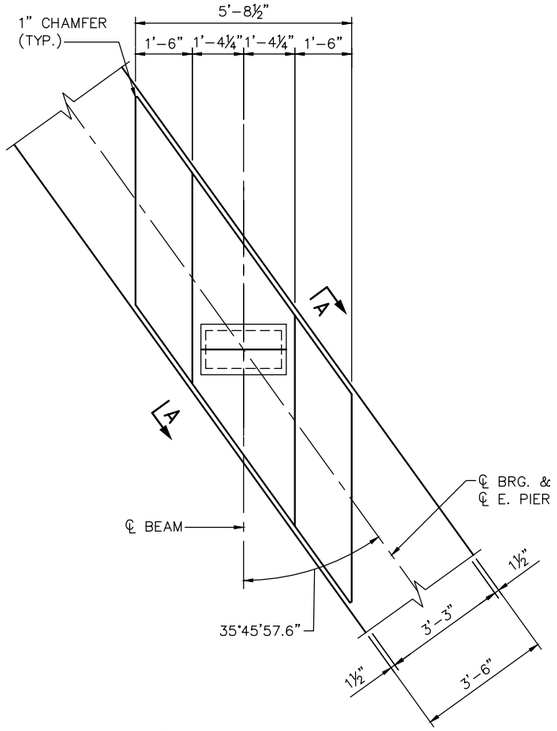

SHEAR LUG PLAN

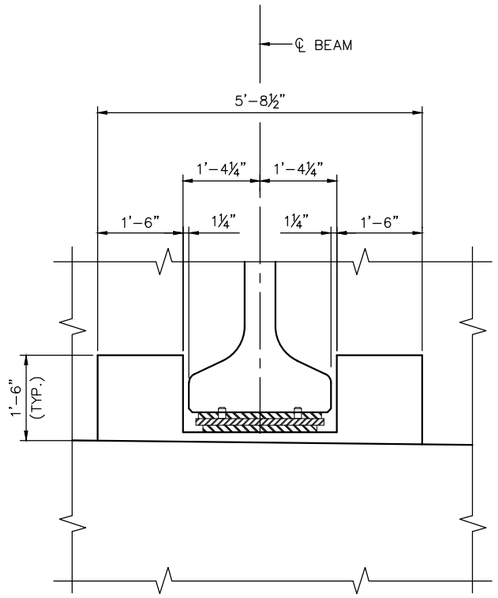

SHEAR LUG ELEVATION

DIMENSIONS ARE PERPENDICULAR TO ℄ BEAM

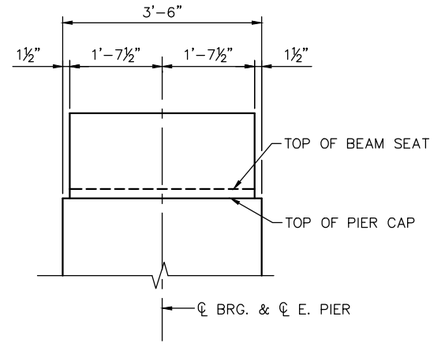

SECTION A-A

Jan. 18 2016 09:20 am V:\3400_ADC\CAD\SEGMENT E4\PLAN SHEETS\STRUCTURES\27C17\CBR27C17-BRG-PIR-001.dwg By: brad.wodash

NO.	DATE	BY	CHECK	DESIGN	REVISION / SUBMITTAL

DESIGNED BY: RHK | CHECKED BY: JBW
DRAWN BY: RHK | CHECKED BY: BLF

AECOM Kimley»Horn

90% SUBMISSION - 01/22/16

METROPOLITAN COUNCIL

SOUTHWEST Green Line LRT Extension

CIVIL - VOLUME 4G
CSAH 40 (GLENWOOD AVENUE) - EAST
BRIDGE 27C17
EAST PIER DETAILS 3

DISCIPLINE: STRUCTURES
SHEET NAME: CBR27C17-BRG-PIR-001-3

SHEET 22 OF 71

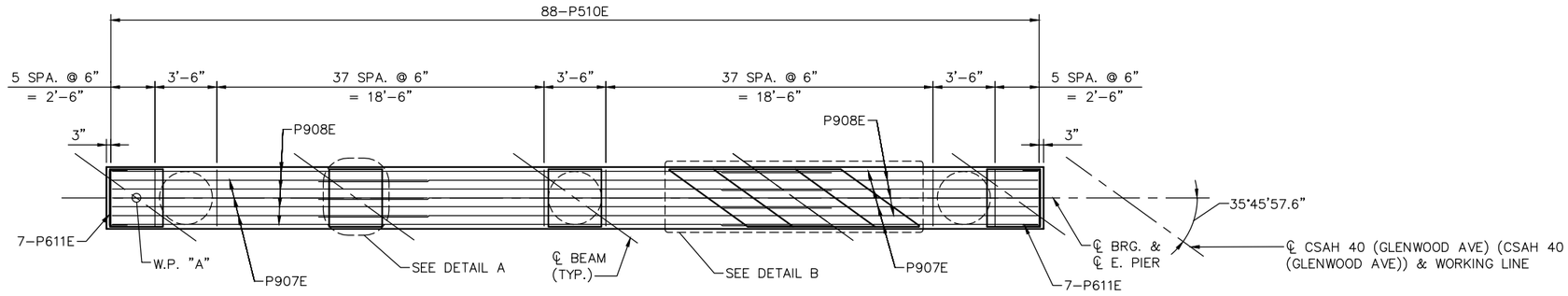

PIER CAP PLAN

(NORTH UNIT SHOWN, SOUTH UNIT SIMILAR)

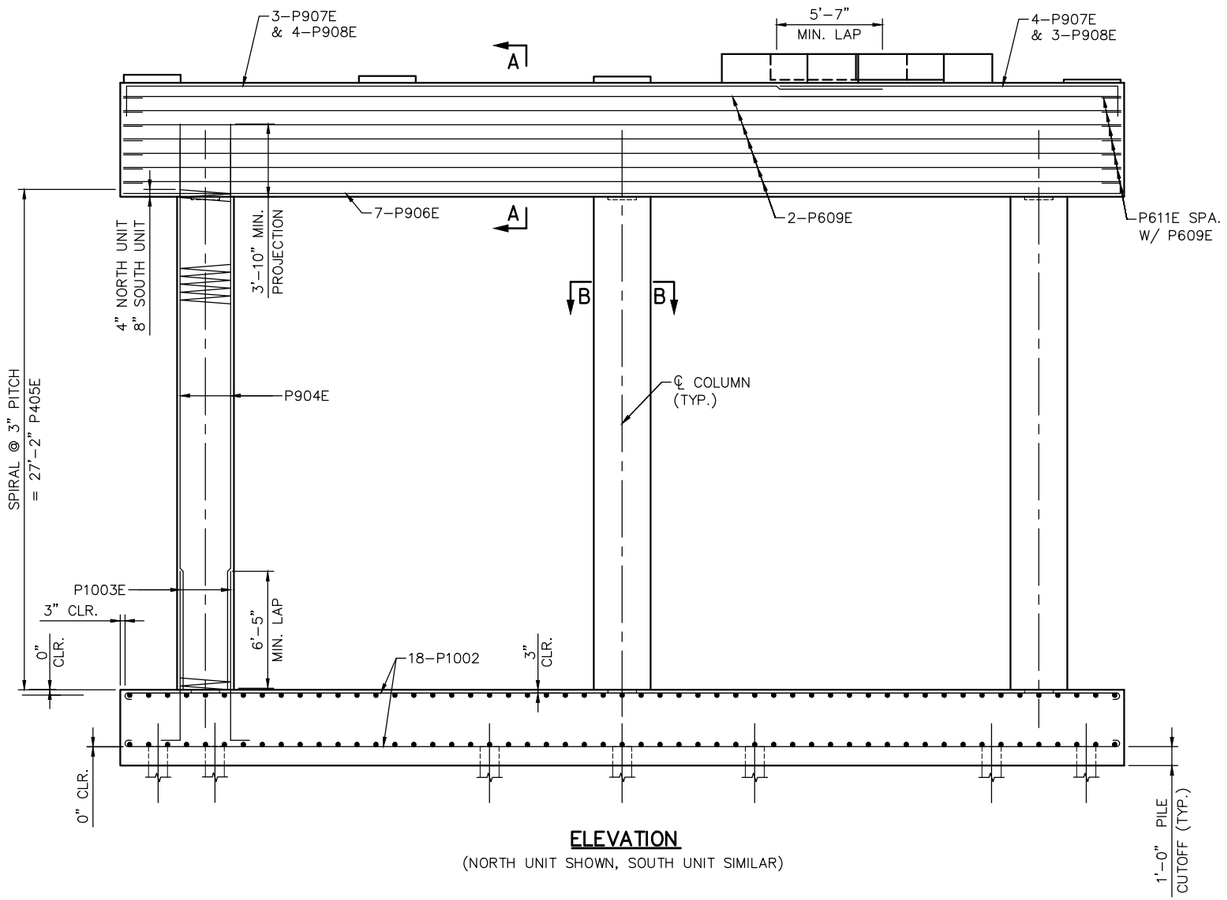

ELEVATION

(NORTH UNIT SHOWN, SOUTH UNIT SIMILAR)

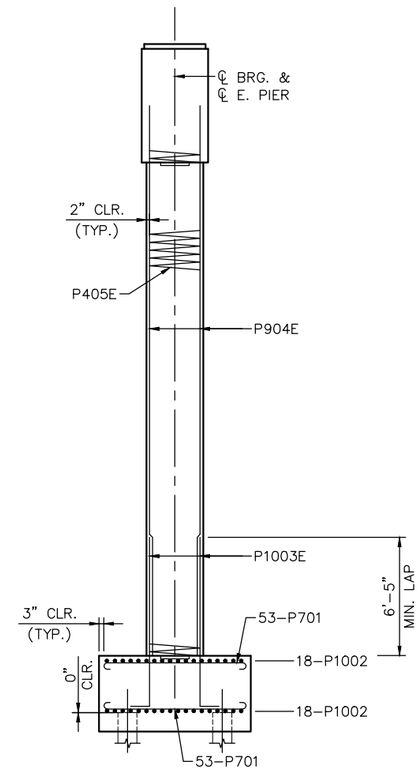

END ELEVATION

NOTES:

SEE SHEET 25 FOR SECTION A–A.
SEE SHEET 24 FOR SECTION B–B.
SEE SHEET 24 FOR DETAIL A.

NO.	DATE	BY	CHECK	DESIGN	REVISION / SUBMITTAL

DESIGNED BY: RHK | CHECKED BY: JBW
DRAWN BY: RHK | CHECKED BY: BLF

AECOM Kimley»Horn

90% SUBMISSION - 01/22/16

METROPOLITAN COUNCIL

SOUTHWEST Green Line LRT Extension

CIVIL - VOLUME 4G
CSAH 40 (GLENWOOD AVENUE) - EAST
BRIDGE 27C17
EAST PIER REINFORCEMENT 1

DISCIPLINE: STRUCTURES
SHEET NAME: CBR27C17-BRG-PIR-001-4

SHEET 23 OF 71

Jan, 18 2016 09:20 am V:\3400_ADC\CAD\SEGMENT E4\PLAN SHEETS\STRUCTURES\27C17\CBR27C17-BRG-PIR-001.dwg By: brad.wodash

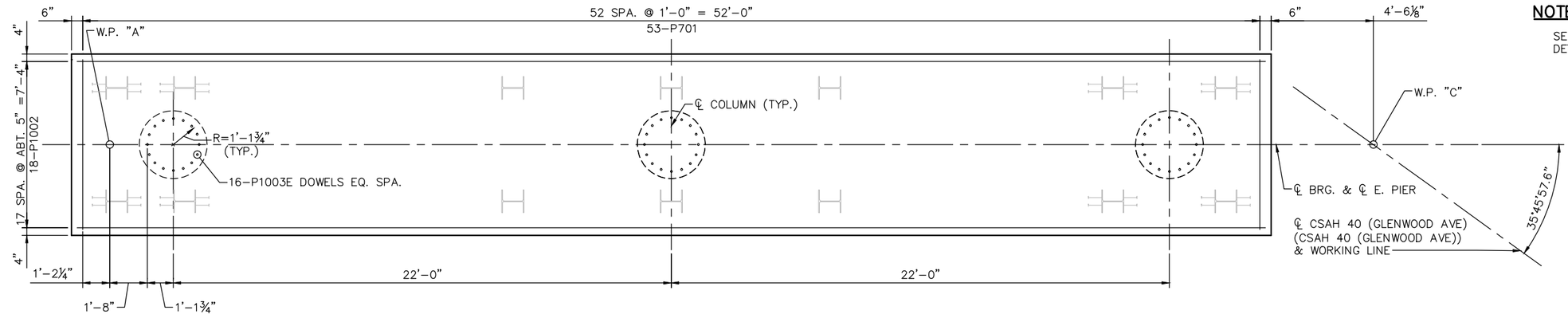

NOTES:

SEE SHEET 23 FOR LOCATION OF SECTION B-B, DETAIL A & DETAIL B.

FOOTING PLAN

(NORTH UNIT SHOWN, SOUTH UNIT SIMILAR)

NORTH

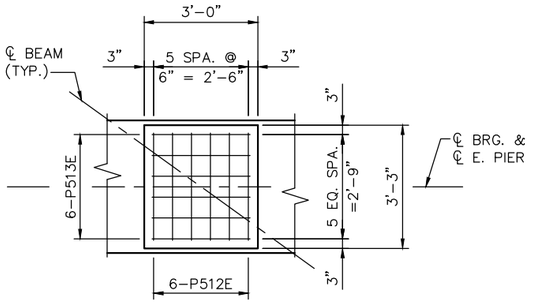

DETAIL A

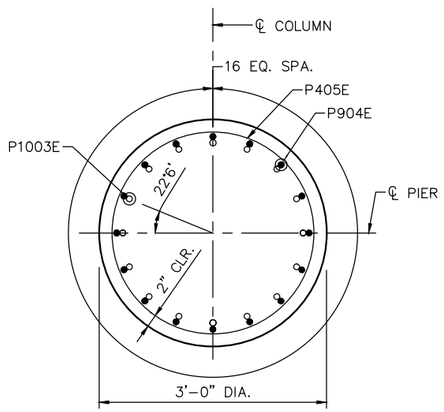

SECTION B-B

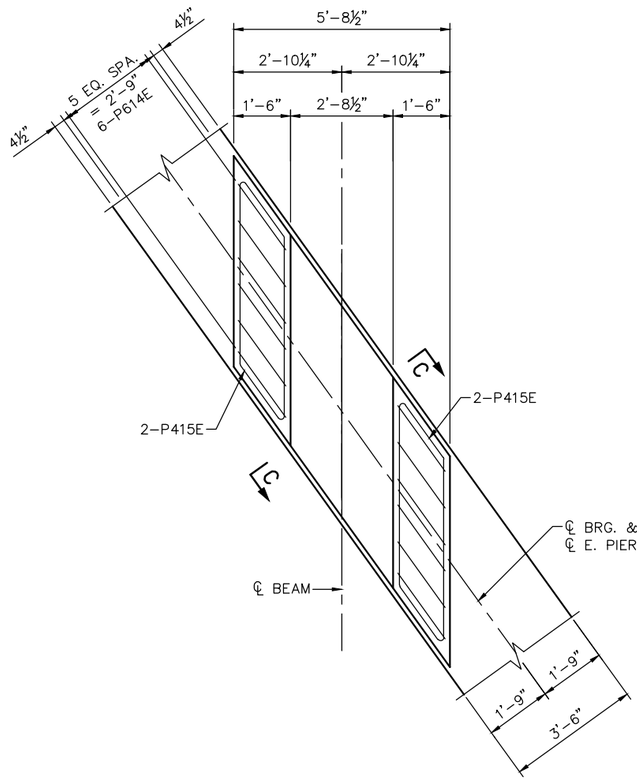

LUG REINFORCEMENT

SOUTH

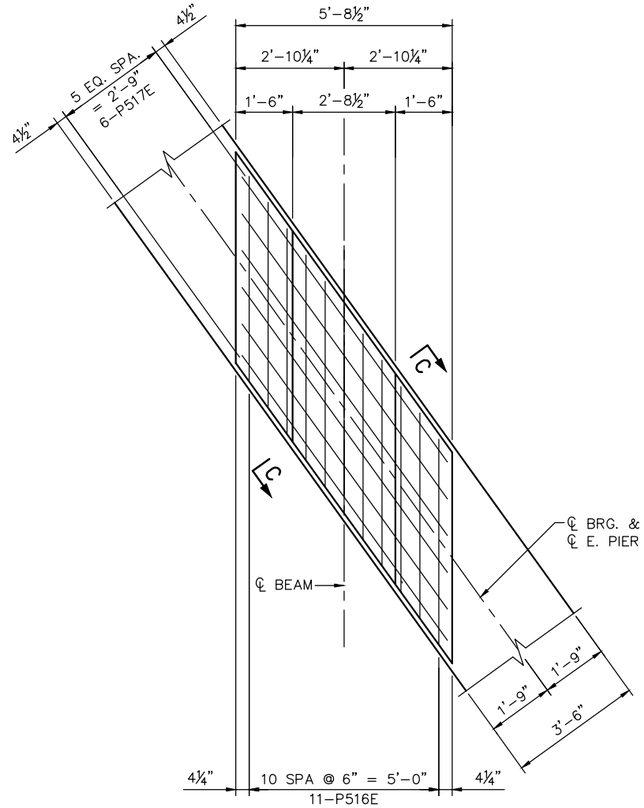

SEAT REINFORCEMENT

DETAIL B

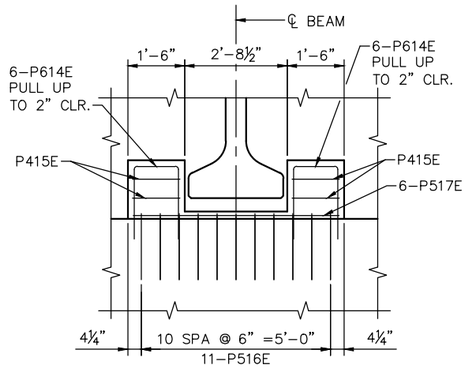

SHEAR LUG ELEVATION

PIER CAP REINFORCEMENT OMITTED FOR CLARITY

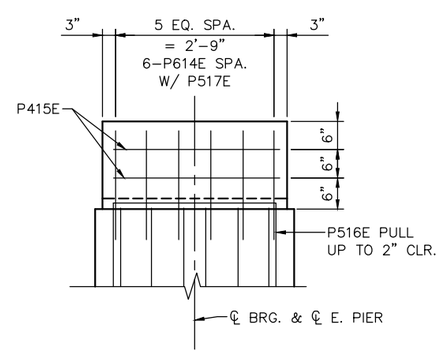

SECTION C-C

PIER CAP REINFORCEMENT OMITTED FOR CLARITY

NO.	DATE	BY	CHECK	DESIGN	REVISION / SUBMITTAL

DESIGNED BY: RHK CHECKED BY: JBW
DRAWN BY: RHK CHECKED BY: BLF

AECOM Kimley»Horn

90% SUBMISSION - 01/22/16

METROPOLITAN COUNCIL

SOUTHWEST Green Line LRT Extension

CIVIL - VOLUME 4G
CSAH 40 (GLENWOOD AVENUE) - EAST
BRIDGE 27C17
EAST PIER REINFORCEMENT 2

DISCIPLINE: STRUCTURES
SHEET NAME: CBR27C17-BRG-PIR-001-5

SHEET 24 OF 71

Jan, 18 2016 09:20 am V:\3400_ADC\CAD\SEGMENT E4\PLAN SHEETS\STRUCTURES\27C17\CBR27C17-BRG-PIR-001.dwg By: brad.wodash

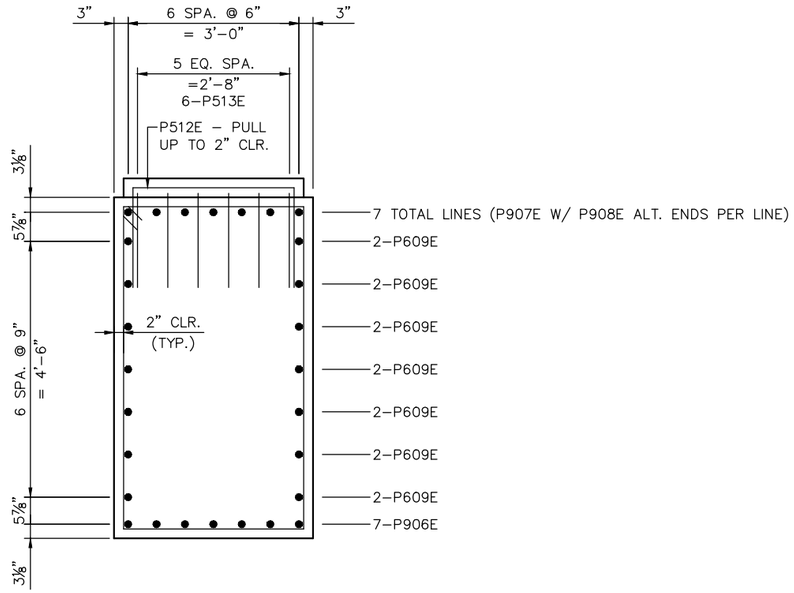

SECTION A-A

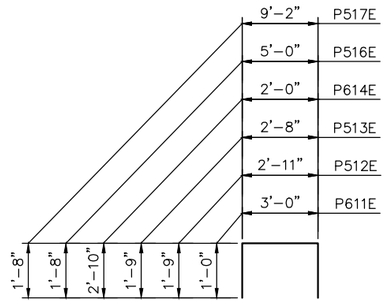

P611E, P512E, P513E,
P614E, P516E, P517E

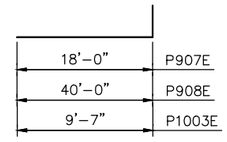

P907E, P908E,
P1003E

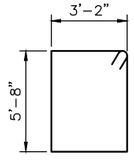

P510E

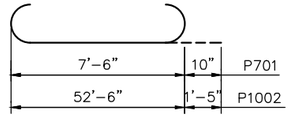

P701, P1002

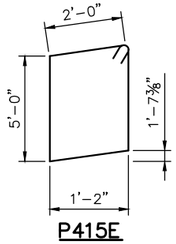

P415E

BILL OF REINFORCEMENT FOR EAST PIER				
BAR	NO.	LENGTH	SHAPE	LOCATION
P701	212	9'-2"	BENT	FOOTING, TRANS.
P1002	72	55'-4"	BENT	FOOTING, LONG.
P1003	96	11'-5"	BENT	COLUMN DOWELS
P904E	96	30'-9"	STR.	COLUMN VERTS
(1) P405E	6	-	BENT	COLUMN SPIRAL
P906E	14	52'-8"	STR.	CAP LONG. BOT
P907E	14	19'-7"	BENT	CAP LONG. TOP (SHORT)
P908E	14	41'-7"	BENT	CAP LONG. TOP (LONG)
P609E	28	52'-8"	STR.	CAP SKIN
P510E	176	18'-7"	BENT	CAP STIRRUPS
P611E	28	5'-0"	BENT	CAP END TIES
P512E	48	6'-5"	BENT	PEDESTAL TIES
P513E	48	6'-2"	BENT	PEDESTAL TIES
P614E	24	7'-8"	BENT	SHEAR LUG TIES
P415E	8	14'-8"	BENT	SHEAR LUG HORIZ. TIES
P516E	22	8'-4"	BENT	SHEAR LUG PEDESTAL TIES
P517E	12	12'-6"	BENT	SHEAR LUG PEDESTAL TIES

NOTES:

SEE SHEET 23 FOR LOCATION OF SECTION A-A.

(1) SPIRAL DATA:
OUTSIDE DIAMETER: 2'-8"
HEIGHT: 27'-2"
PITCH: 3"
SPIRAL ROD SIZE: ½" PLAIN ROUND
WEIGHT 625 LBS EACH
OUTSIDE DIAMETER OF DOWEL CIRCLE TO BE 2¼" LESS THAN INSIDE DIAMETER SPIRAL.
ADD 1½ COMPLETE TURNS AT EACH END.

NO.	DATE	BY	CHECK	DESIGN	REVISION / SUBMITTAL

DESIGNED BY: RHK CHECKED BY: JBW
DRAWN BY: RHK CHECKED BY: BLF

AECOM Kimley»Horn

90% SUBMISSION - 01/22/16

METROPOLITAN COUNCIL

SOUTHWEST Green Line LRT Extension

CIVIL - VOLUME 4G
CSAH 40 (GLENWOOD AVENUE) - EAST
BRIDGE 27C17
EAST PIER RIENFORCEMENT 3

DISCIPLINE: STRUCTURES
SHEET NAME: CBR27C17-BRG-PIR-001-6

SHEET 25 OF 71

Jan, 18 2016 09:20 am V:\3400_ADC\CAD\SEGMENT E4\PLAN SHEETS\STRUCTURES\27C17\CBR27C17-BRG-PIR-001.dwg By: brad.wodash

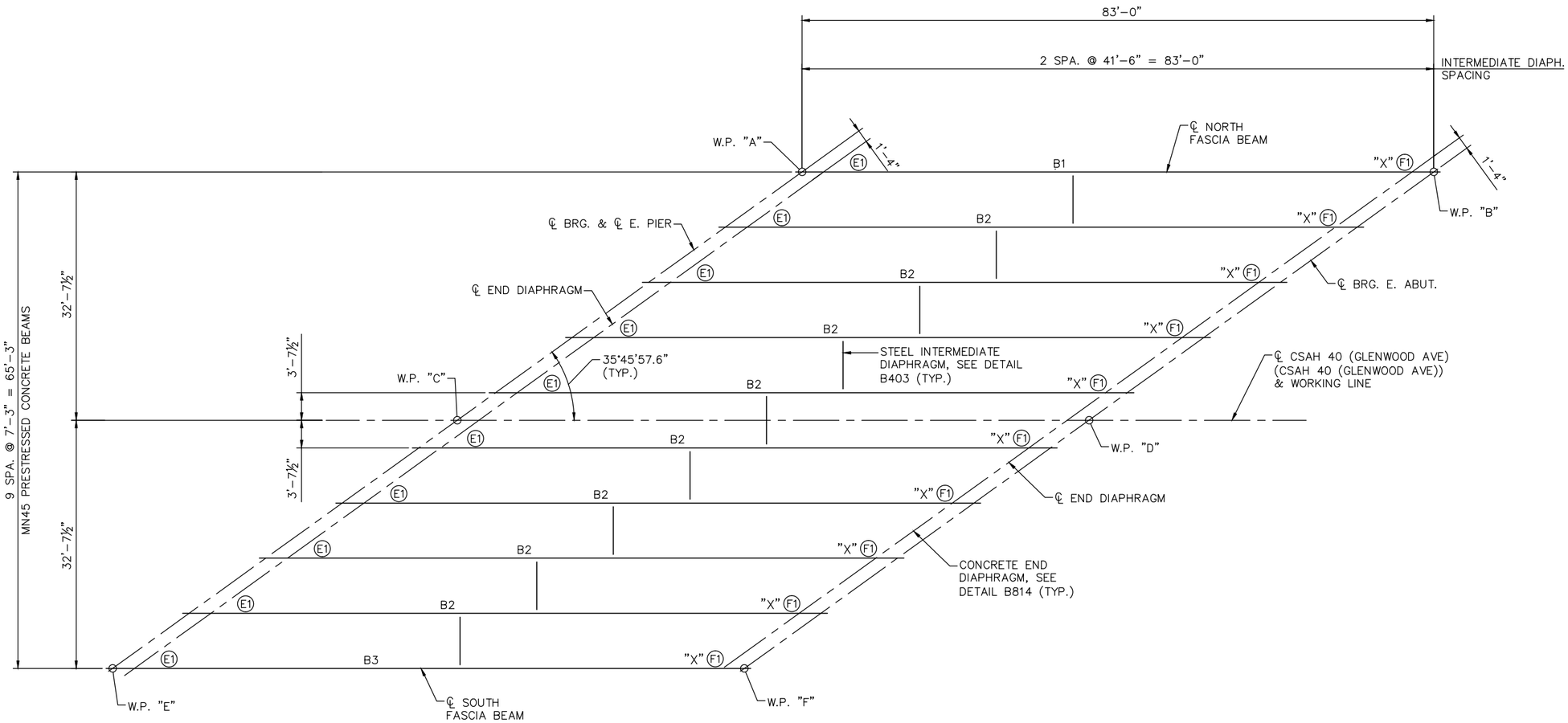

FRAMING PLAN

NOTES:

ALL BEAMS SET PARALLEL TO WORKING LINE. ALL STEEL INTERMEDIATE DIAPHRAGMS SET PERPENDICULAR TO CENTERLINE OF BEAMS.

(E1) DENOTES EXPANSION CURVED PLATE BEARING ASSEMBLY TYPE E1. SEE DETAIL B311.

(F1) DENOTES FIXED CURVED PLATE BEARING ASSEMBLY, TYPE F1. SEE DETAIL B310.

"X" INDICATES END OF BEAM.

NO.	DATE	BY	CHECK	DESIGN	REVISION / SUBMITTAL

DESIGNED BY: BAW | CHECKED BY: BLF
DRAWN BY: LMT | CHECKED BY: BLF

AECOM Kimley»Horn

90% SUBMISSION - 01/22/16

METROPOLITAN COUNCIL

SOUTHWEST Green Line LRT Extension

CIVIL - VOLUME 4G
CSAH 40 (GLENWOOD AVENUE) - EAST
BRIDGE 27C17
FRAMING PLAN

DISCIPLINE: STRUCTURES
SHEET NAME: CBR27C17-BRG-SUP-002

SHEET 26 OF 71

Jan, 18 2016 09:21 am V:\3400_ADC\CAD\SEGMENT E4\PLAN SHEETS\STRUCTURES\27C17\CBR27C17-BRG-SUP-002.dwg By: brad.wodash

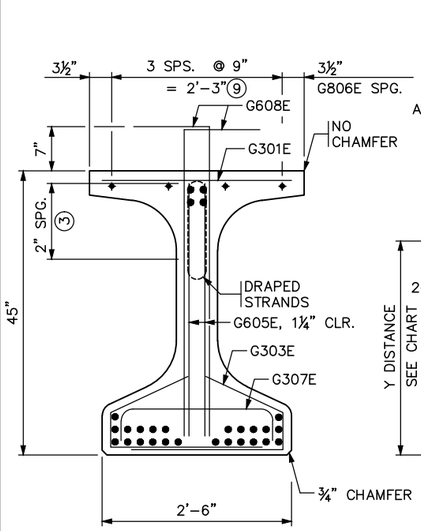

END VIEW

CUT STRANDS FLUSH WITH CONCRETE. COVER ENDS WITH SEALANT PER APPROVED PRODUCTS LIST "BRIDGE-PRESTRESSED BEAMS-CUT STRAND SEALANT."

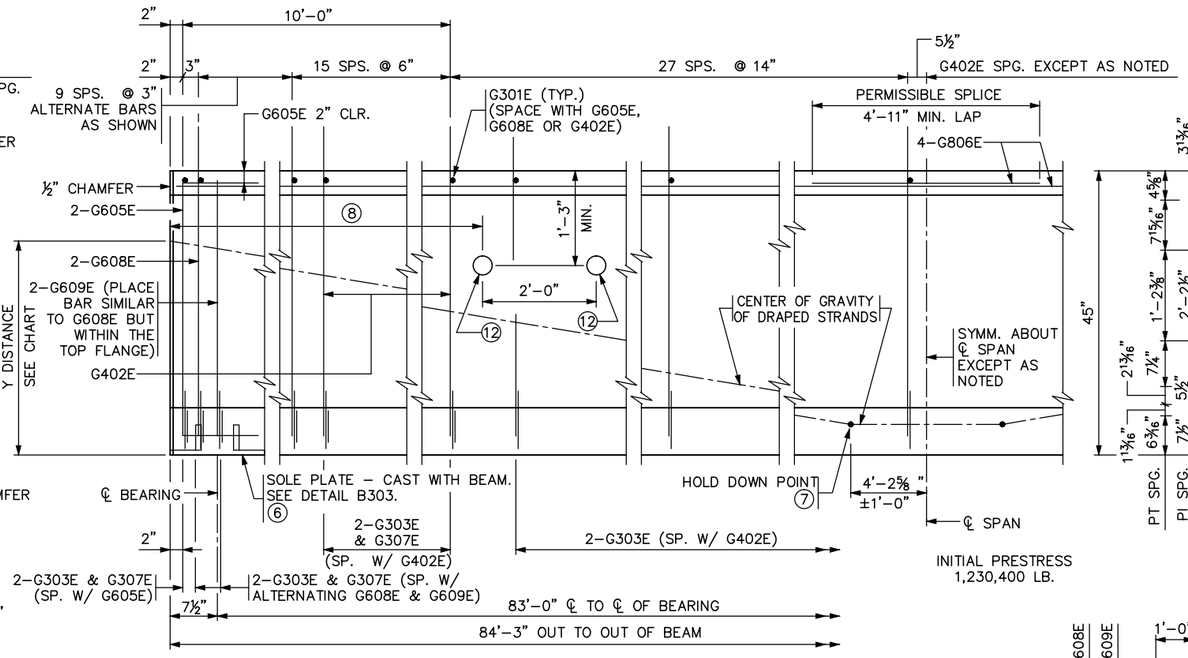

BEAM ELEVATION

INITIAL PRESTRESS 1,230,400 LB.

CALCULATED PRESTRESS LOSSES	
ELASTIC SHORTENING LOSS	15.39 KSI
LONG TERM LOSSES	30.67 KSI
TOTAL LOSSES	46.06 KSI

MINIMUM CONCRETE STRENGTH - K.S.I.	
(1) f'ci	(2) f'c
6.0 KSI	7.0 KSI

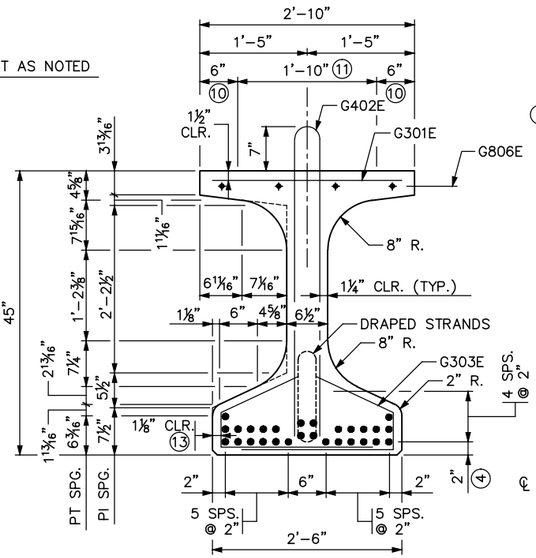

SECTION AT ℄ SPAN

Y DISTANCES (INCHES)			
	NO.	℄ SPAN	END
STRAIGHT STRANDS	24	3.17	
DRAPED STRANDS	4	4.00	41.00 □
(5) TOTAL STRANDS	28	3.29	

Y = DISTANCE TO CENTER OF GRAVITY OF STRANDS FROM BOTTOM OF BEAM. ALL STRANDS SPACED 2" CENTER TO CENTER, HORIZONTALLY AND VERTICALLY, EXCEPT AS NOTED.

□ A TOLERANCE OF ±1" WILL BE PERMITTED IN THIS DIMENSION.

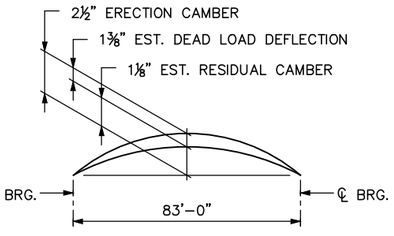

CAMBER DIAGRAM

ERECTION CAMBER SHOWN IS AFTER DIAPHRAGMS ARE IN PLACE.

DEAD LOAD DEFLECTION SHOWN IS FOR WEIGHT OF SLAB, WEARING COURSE, BARRIER, SIDEWALK AND MEDIAN WHERE APPLICABLE.

CONTRACTOR WILL TAKE ELEVATIONS AT TOP OF BEAMS AFTER ERECTION AND WILL ALLOW FOR DEFLECTION SHOWN TO ENABLE BUILDING FORMS TO CORRECT GRADE AND SPECIFIED SLAB THICKNESS. PROVIDE COPY OF ELEVATIONS TO THE ENGINEER.

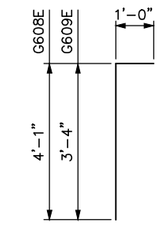

G608E & G609E



G301E

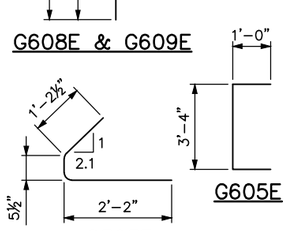

G303E

G605E

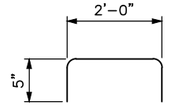

G307E

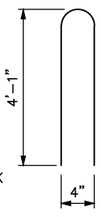

G402E

GENERAL NOTES

PROVIDE HANDLING HOOKS OR DEVICES AS REQUIRED BY CONTRACTOR.

MARK EACH BEAM SHOWING BRIDGE NUMBER, CASTING DATE, AND INDIVIDUAL IDENTIFICATION LETTERS AND NUMBERS ON THE FACE OF THE BEAM, NEAR THE END, SO LOCATED THAT THEY WILL BE EXPOSED AFTER THE END DIAPHRAGMS HAVE BEEN CAST. MARK FASCIA BEAMS ON THE INSIDE FACE. ENSURE ALL MARKINGS ARE STENCILLED AND CLEARLY LEGIBLE. FOR LOCATION OF BEAMS, SEE FRAMING PLAN.

~~ALL MATERIAL AND WORK SHOWN OR NOTED ON THIS SHEET IS INCLUDED IN UNIT PRICE BID FOR PRESTRESSED CONCRETE BEAMS. SEE SPEC. 2405.~~

SEE FRAMING PLAN FOR BEAM END MARKED "X" AND DIAPHRAGM SPACING.

AS AN ALTERNATE TO THE END DIAPHRAGM ANCHORAGES SHOWN, THE CONTRACTOR MAY SUBMIT DETAILS OF A CAST-IN-PLACE ANCHORAGE TO THE ENGINEER FOR APPROVAL. ANCHORAGE MUST PROVIDE AN ULTIMATE PULL OUT STRENGTH OF 15 KIPS PER ANCHORAGE.

APPLY AN APPROVED SEALER TO THE SIDES OF THE BEAM NEAR EACH END PER THE SPECIAL PROVISIONS.

(1) MINIMUM CONCRETE STRENGTH AT TIME OF PRESTRESS TRANSFER.

(2) MINIMUM CONCRETE STRENGTH WHEN BEAM CAN BE TRANSPORTED AND INSTALLED.

(3) DRAPED STRANDS.

(4) STRAIGHT STRANDS.

(5) USE 0.6" DIA. 7-WIRE LOW RELAXATION PRESTRESSING STRAND, CONFORMING TO ASTM A416, GRADE 270.

(6) ~~FOR INTEGRAL ABUTMENT, SOLE PLATE CAN BE ELIMINATED OR REPLACED WITH AN APPROVED PROTECTION PLATE. BEAMS DETAILED TO INCLUDE A TAPERED PLATE PER STANDARD FIGURE B309 MUST INCLUDE SOLE PLATE.~~

(7) CENTER OF GRAVITY OF HOLD DOWNS WHEN MULTIPLE HOLD DOWNS ARE USED.

(8) DIMENSION DETERMINED BY CONTRACTOR. MAINTAIN 2" MINIMUM CLEAR FROM STRANDS.

(9) TWO INSIDE BARS MAY BE PLACED ADJACENT TO VERTICAL STIRRUP FOR TYING CONVENIENCE.

(10) STEEL TROWEL TO SMOOTH FINISH AND APPLY BOND BREAKER PER APPROVED PRODUCTS LIST.

(11) ROUGH FLOAT AND BROOM TRANSVERSELY FOR BOND PER SPEC. 2405.3.D.

(12) OPTIONAL: 3" MAX. DIA. SLEEVE FOR HAULING (AFTER INSTALLATION, COAT WITH APPROVED EPOXY BONDING AGENT & FILL WITH APPROVED NON-SHRINK GROUT).

(13) TYP. CLR. FOR ENTIRE BOTTOM FLANGE.

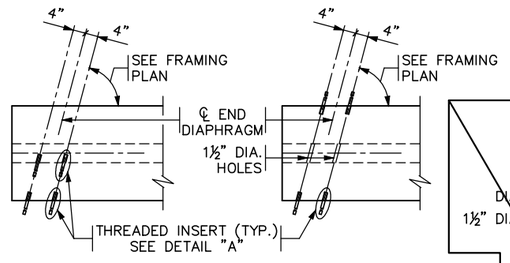

PLAN AT FASCIA BEAMS

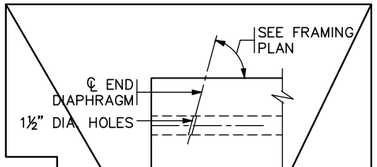

PLAN AT INTERIOR BEAMS

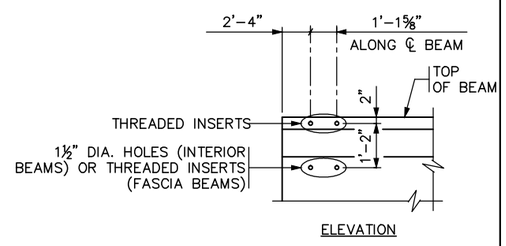

ELEVATION

CONCRETE END DIAPHRAGM

PARAPET ABUTMENT
(SEE DETAIL B814 FOR DIAPHRAGM DETAILS)

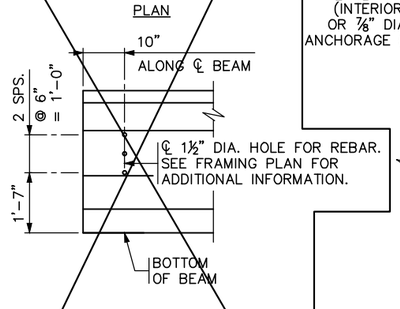

ELEVATION

CONCRETE END DIAPHRAGM

SEE SUPERSTRUCTURE DETAILS AND REINFORCEMENT FOR DIAPHRAGM DETAILS

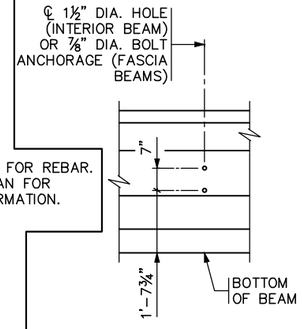

ELEVATION

STEEL INTERMEDIATE DIAPHRAGM

(SEE DETAIL B403 FOR DIAPHRAGM DETAILS)

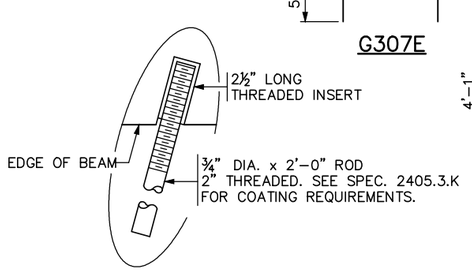

DETAIL "A"

REVISED: DECEMBER 02, 2015

APPROVED: JANUARY 13, 2015

Nancy Dorbenberger
STATE BRIDGE ENGINEER

CERTIFIED BY _____ LICENSED PROFESSIONAL ENGINEER _____ DATE

NAME: **ENGINEER** LIC. NO. #####

TITLE: MN45" PRESTRESSED CONCRETE BEAM DETAILS (PRETENSIONED) MN45-85

BEAMS B1-B3

FIG. 5-397.507

DES: BAW	DR: LMT	APPROVED:
CHK: BLF	CHK: BLF	

SHEET NO. 27 OF 71 SHEETS

BRIDGE NO. 27C17

Jan, 18 2016 09:21 am V:\3400_ADC\CAD\SEGMENT E4\PLAN SHEETS\STRUCTURES\27C17\CBR27C17-BRG-PCB-001.dwg By: brad.wodash

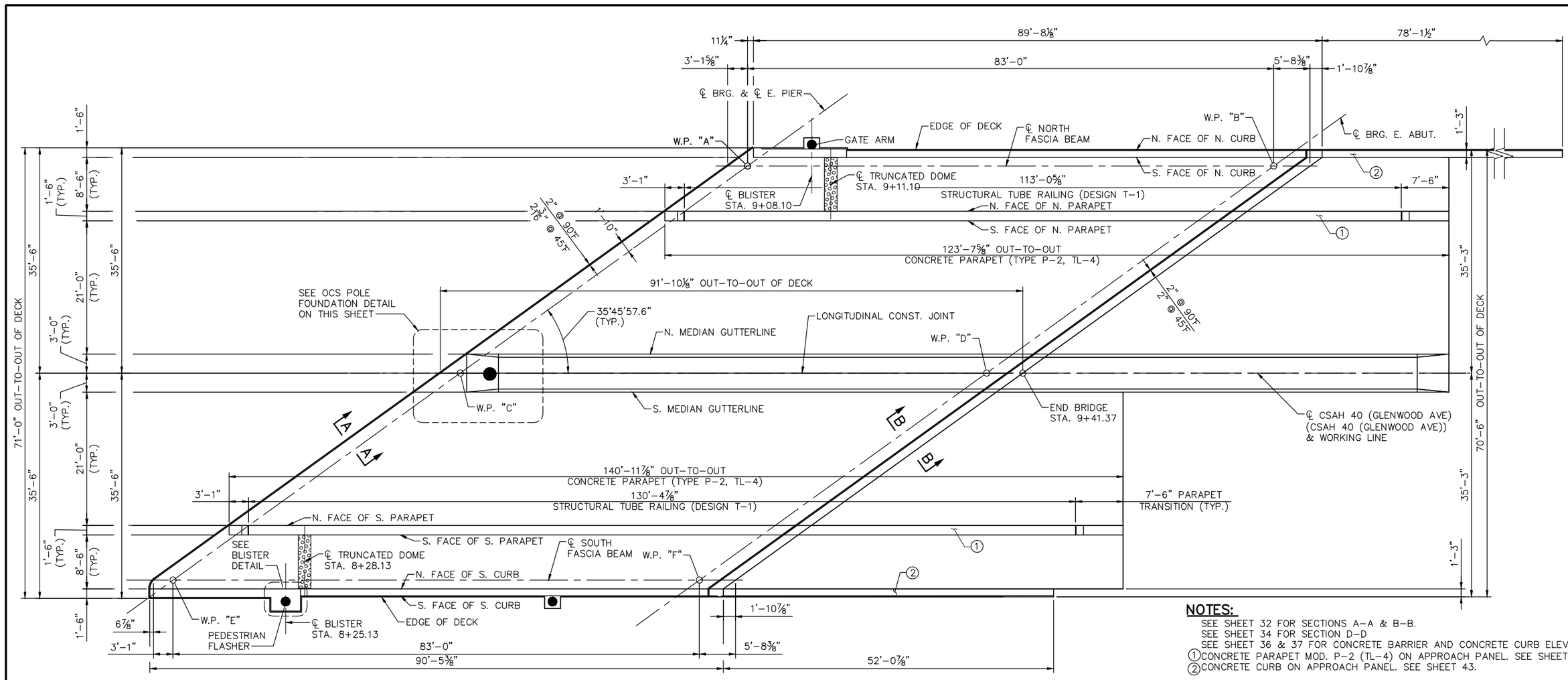

NOTES:

SEE SHEET 32 FOR SECTIONS A–A & B–B.
SEE SHEET 34 FOR SECTION D–D
SEE SHEET 36 & 37 FOR CONCRETE BARRIER AND CONCRETE CURB ELEVATIONS.
① CONCRETE PARAPET MOD. P–2 (TL–4) ON APPROACH PANEL. SEE SHEET 42.
② CONCRETE CURB ON APPROACH PANEL. SEE SHEET 43.

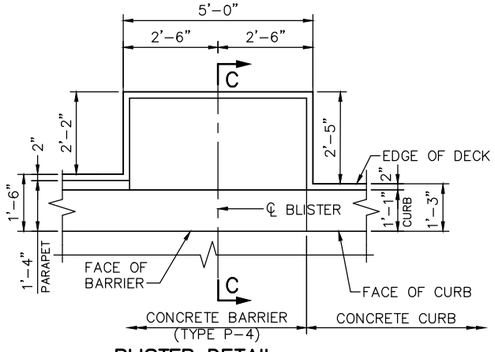

BLISTER DETAIL

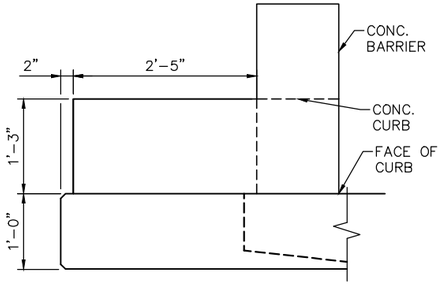

SECTION C–C

DECK PLAN

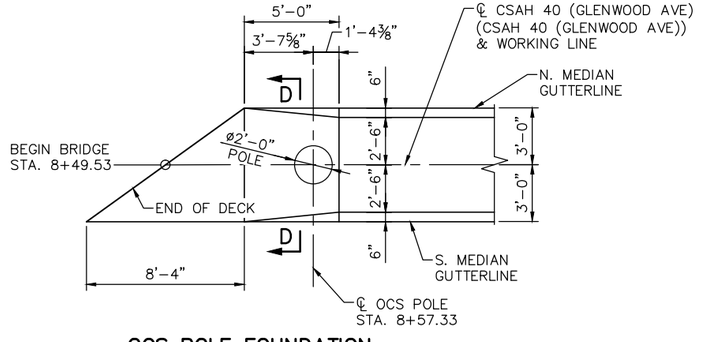

OCS POLE FOUNDATION

NO.	DATE	BY	CHECK	DESIGN	REVISION / SUBMITTAL

DESIGNED BY: BAW CHECKED BY: BLF
DRAWN BY: LMT CHECKED BY: BLF

AECOM Kimley»Horn

90% SUBMISSION - 01/22/16

METROPOLITAN COUNCIL

SOUTHWEST Green Line LRT Extension

CIVIL - VOLUME 4G
CSAH 40 (GLENWOOD AVENUE) - EAST BRIDGE 27C17
SUPERSTRUCTURE DETAILS 1

DISCIPLINE: STRUCTURES
SHEET NAME: CBR27C17-BRG-SUP-003

SHEET 28 OF 71

Jan, 18 2016 09:22 am V:\3400_ADC\CAD\SEGMENT E4\PLAN SHEETS\STRUCTURES\27C17\CBR27C17-BRG-SUP-003.dwg By: brad.wodash

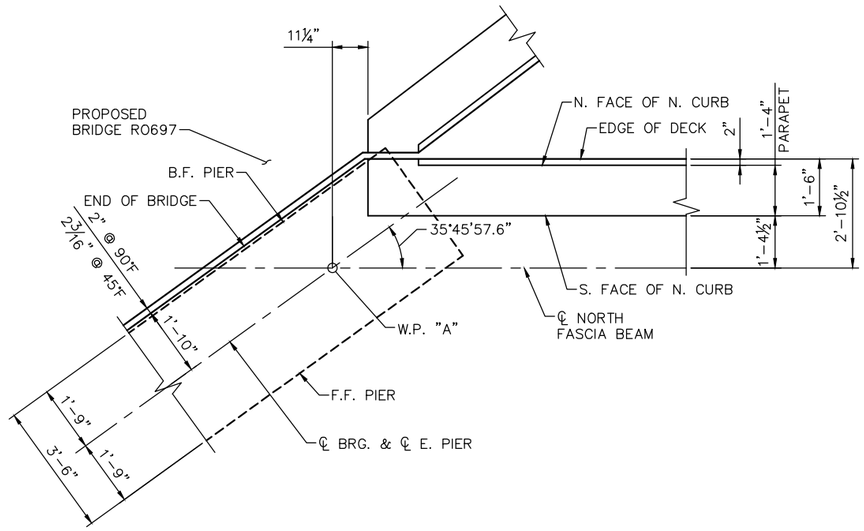

NORTHWEST CORNER DETAIL

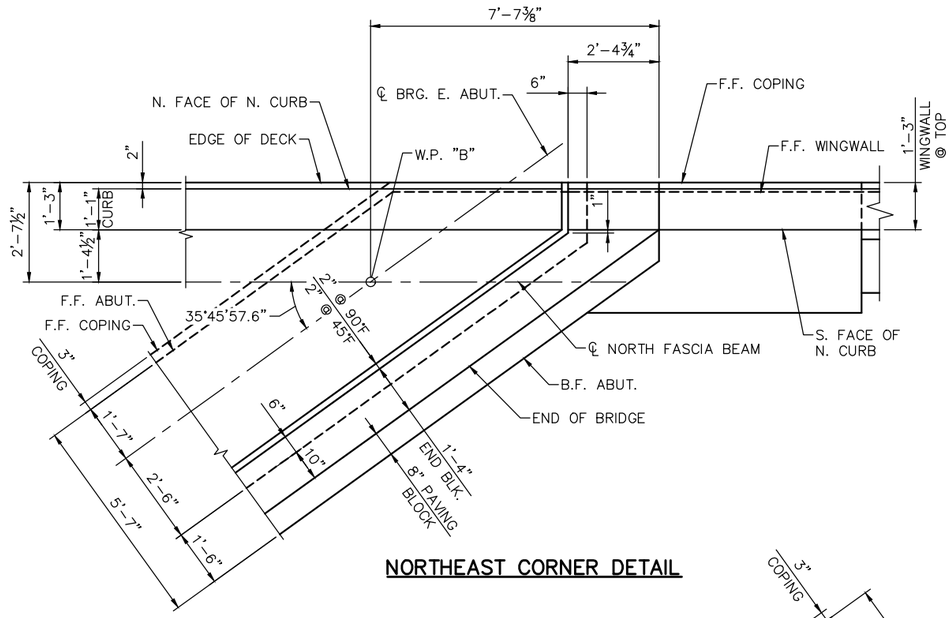

NORTHEAST CORNER DETAIL

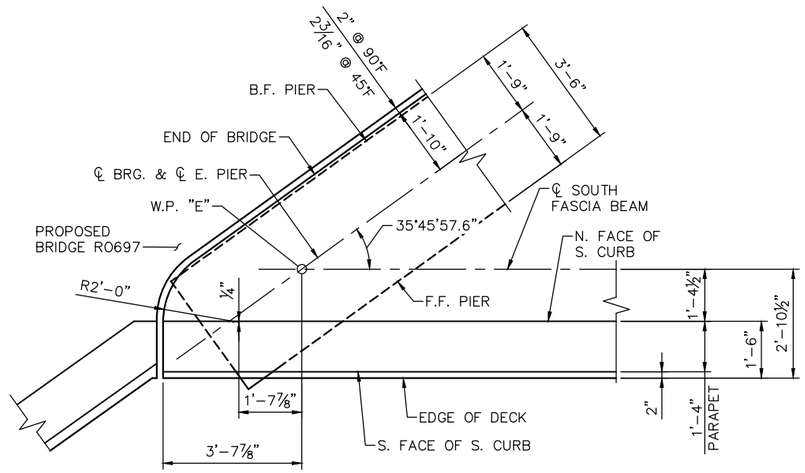

SOUTHWEST CORNER DETAIL

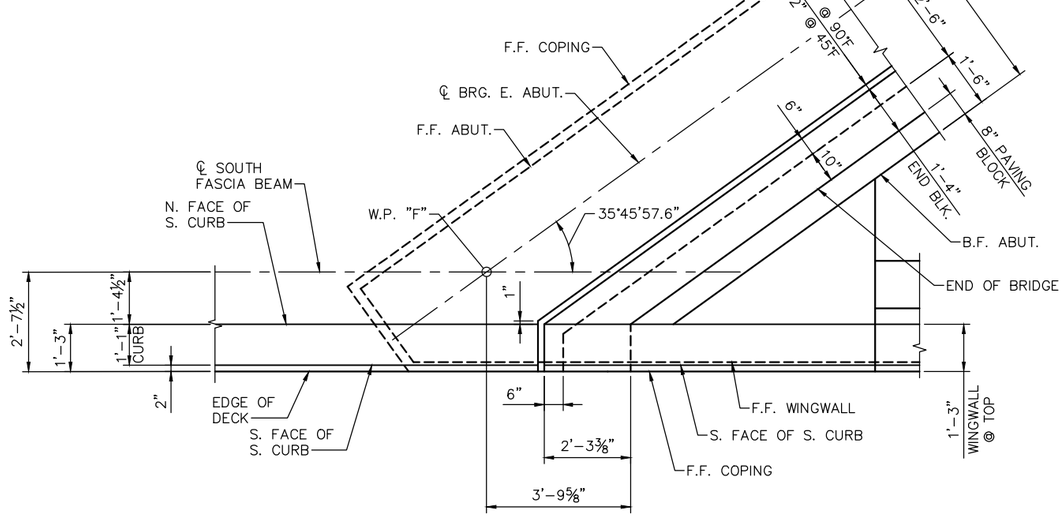

SOUTHEAST CORNER DETAIL

NO.	DATE	BY	CHECK	DESIGN	REVISION / SUBMITTAL

DESIGNED BY: BAW | CHECKED BY: BLF
DRAWN BY: LMT | CHECKED BY: BLF

AECOM Kimley»Horn

90% SUBMISSION - 01/22/16

METROPOLITAN COUNCIL

SOUTHWEST Green Line LRT Extension

CIVIL - VOLUME 4G
CSAH 40 (GLENWOOD AVENUE) - EAST
BRIDGE 27C17
SUPERSTRUCTURE DETAILS 2

DISCIPLINE: STRUCTURES

SHEET NAME: CBR27C17-BRG-SUP-004

SHEET 29 OF 71

Jan, 18 2016 09:22 am V:\3400_ADC\CAD\SEGMENT E4\PLAN SHEETS\STRUCTURES\27C17\CBR27C17-BRG-SUP-004.dwg By: brad.wodash

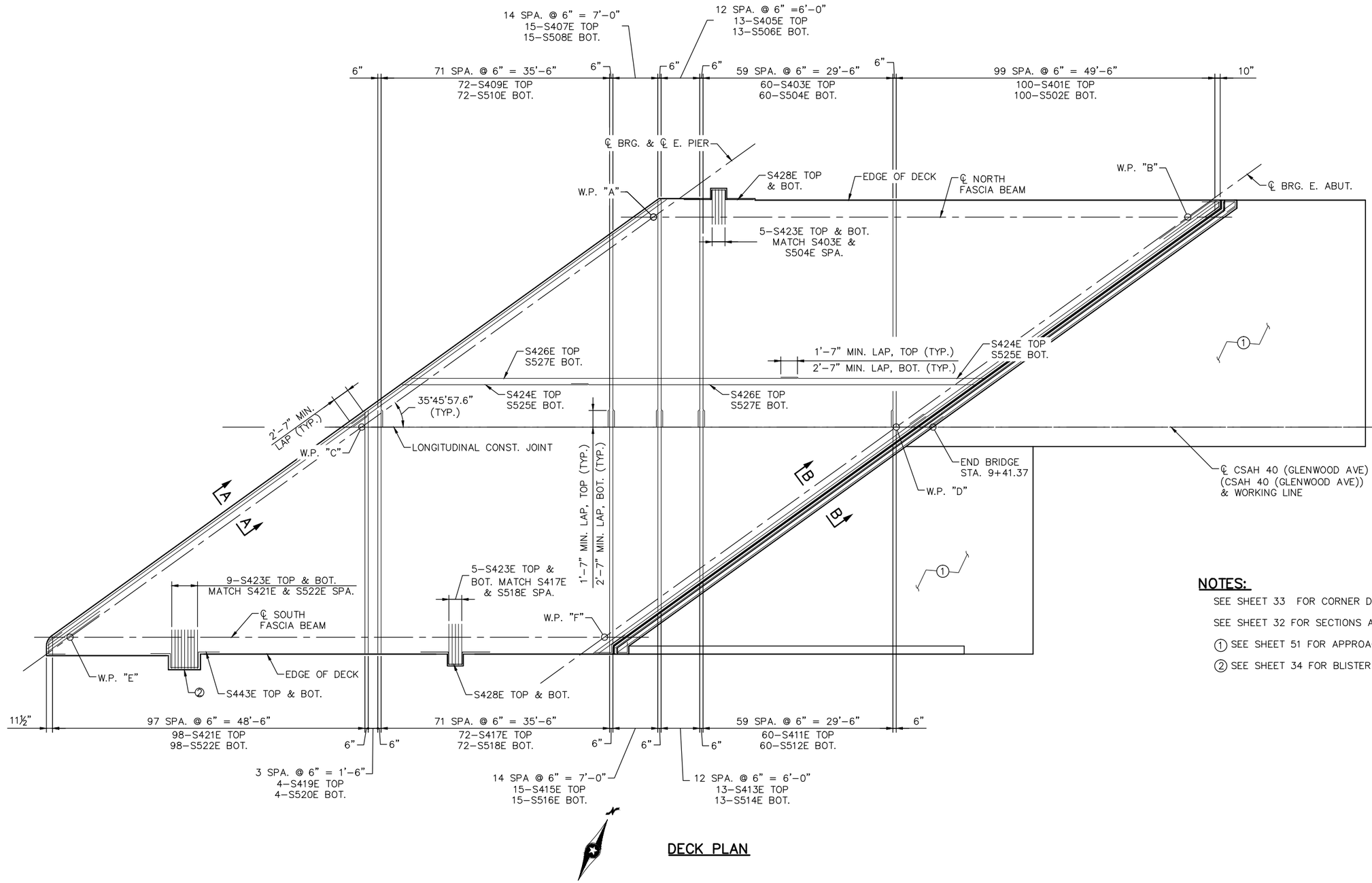

DECK PLAN

NOTES:

SEE SHEET 33 FOR CORNER DETAILS.

SEE SHEET 32 FOR SECTIONS A-A & B-B.

① SEE SHEET 51 FOR APPROACH PANEL DETAILS.

② SEE SHEET 34 FOR BLISTER DETAILS.

NO.	DATE	BY	CHECK	DESIGN	REVISION / SUBMITTAL

DESIGNED BY: BAW CHECKED BY: BLF
DRAWN BY: LMT CHECKED BY: BLF

AECOM Kimley»Horn

90% SUBMISSION - 01/22/16

METROPOLITAN COUNCIL

SOUTHWEST Green Line LRT Extension

CIVIL - VOLUME 4G
CSAH 40 (GLENWOOD AVENUE) - EAST
BRIDGE 27C17
SUPERSTRUCTURE DETAILS 3

DISCIPLINE: STRUCTURES
SHEET NAME: CBR27C17-BRG-SUP-005

SHEET 30 OF 71

Jan, 18 2016 09:23 am V:\3400_ADC\CAD\SEGMENT E4\PLAN SHEETS\STRUCTURES\27C17\CBR27C17-BRG-SUP-005.dwg By: brad.wodash

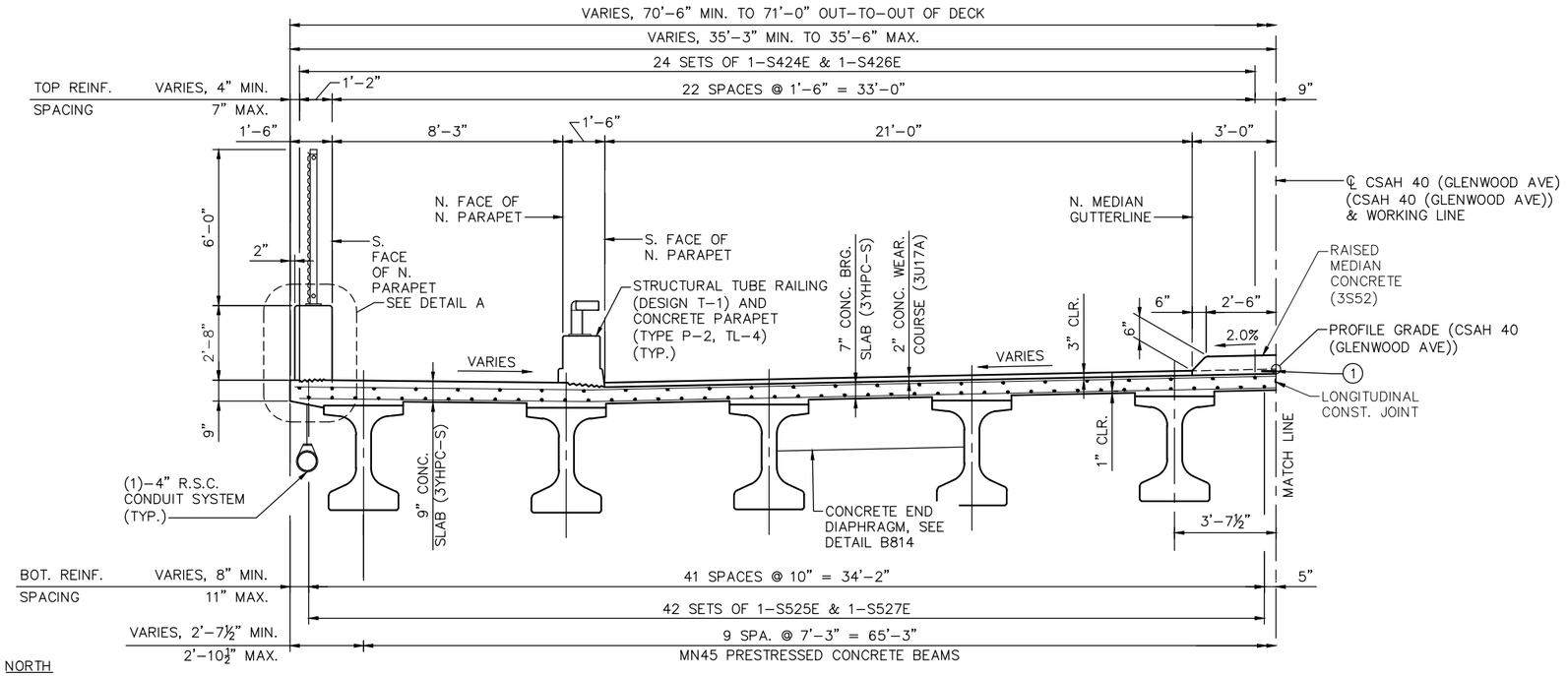

TRANSVERSE SECTION THRU DECK

NOTES:

SEE SHEET 36 & 37 FOR TOP OF DECK ELEVATIONS ALONG GUTTERLINES.

(1) MEMBRANE WATERPROOFING SYSTEMS PER MnDOT 2481.3.B.

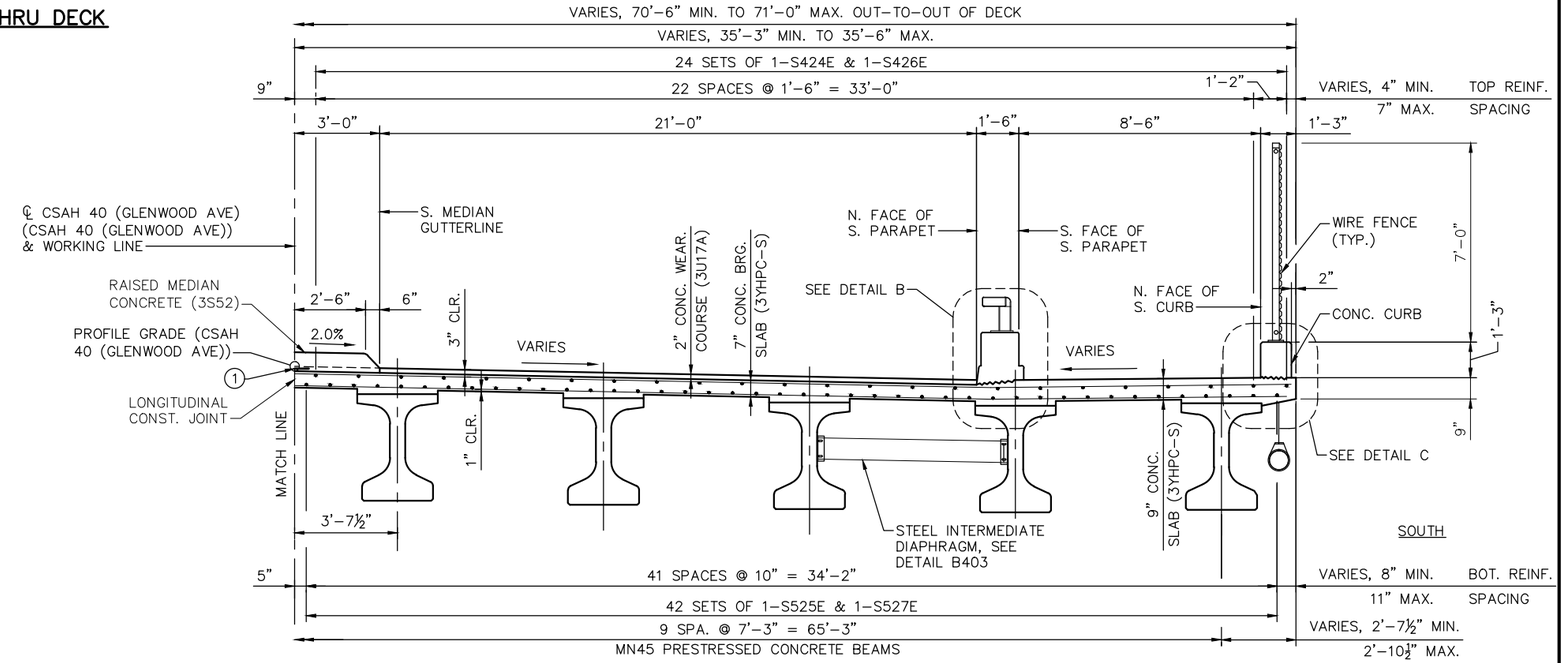

TRANSVERSE SECTION THRU DECK

NO.	DATE	BY	CHECK	DESIGN	REVISION / SUBMITTAL

DESIGNED BY: BAW | CHECKED BY: BLF
DRAWN BY: LMT | CHECKED BY: BLF

AECOM Kimley»Horn

90% SUBMISSION - 1/22/16

METROPOLITAN COUNCIL

SOUTHWEST Green Line LRT Extension

CIVIL - VOLUME 4G
CSAH 40 (GLENWOOD AVENUE) - EAST
BRIDGE 27C17
SUPERSTRUCTURE DETAILS 4

DISCIPLINE: STRUCTURES

SHEET NAME: CBR27C17-BRG-SUP-006-1

SHEET 31 OF 71

Jan, 18 2016 09:23 am V:\3400_ADC\CAD\SEGMENT E4\PLAN SHEETS\STRUCTURES\27C17\CBR27C17-BRG-SUP-006.dwg By: brad.wodash

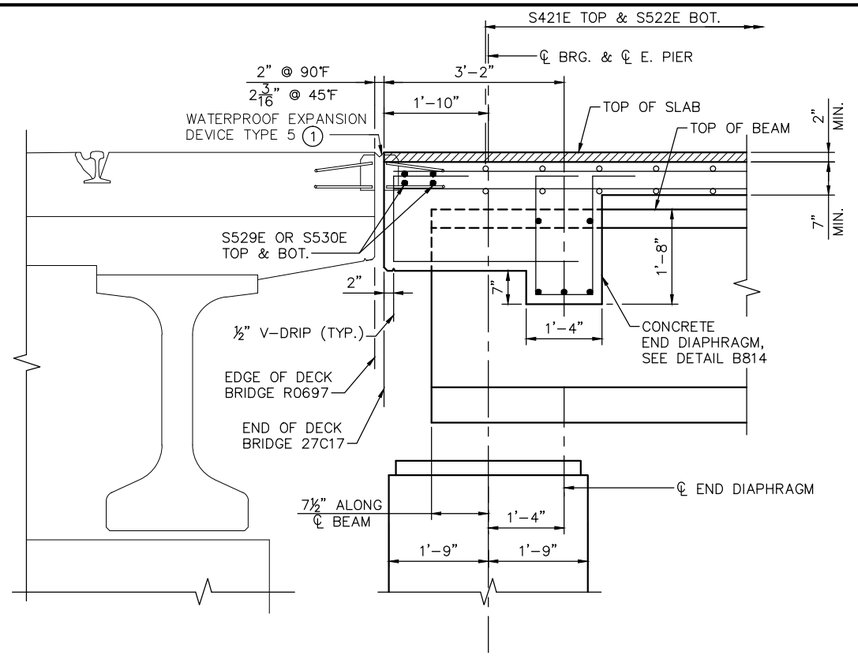

SECTION A–A

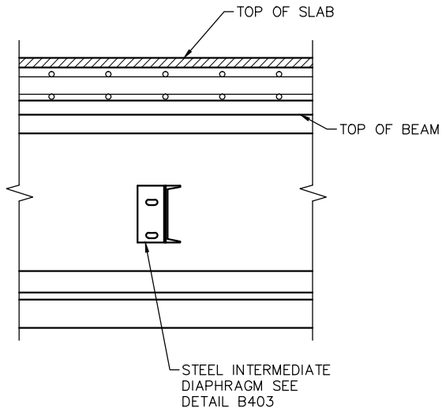

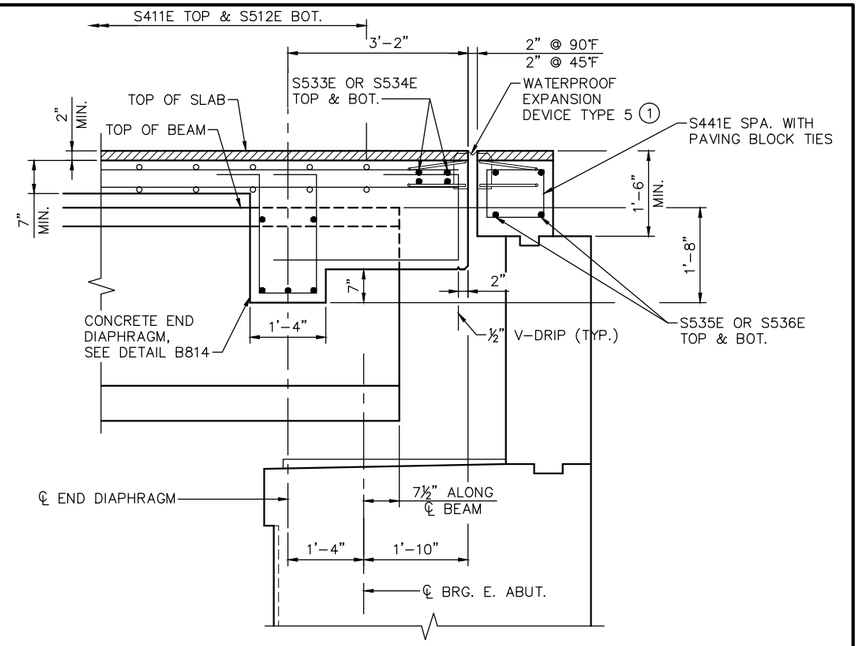

SECTION B–B

INTERMEDIATE DIAPHRAGM DETAIL

STOOL TIE INFORMATION			
BEAM LINE NO.	A	B	C
B2	17'-0"	33'-0"	34
B3	20'-0"	42'-0"	43
B4	20'-0"	42'-0"	43
B7	37'-0"	22'-0"	23

A = APPROXIMATE DISTANCE FROM ℄ PIER TO START OF STOOL TIES
B = APPROXIMATE LENGTH OF STOOL TIE PLACEMENT
C = NUMBER S442E STOOL TIES IN SPAN

NOTES:

1. BEAM LINES ARE NUMBERED FROM NORTH TO SOUTH WITH NORTH FASCIA AS BEAM LINE 1 AND SOUTH FASCIA AS BEAM LINE 10
2. PLACE S442E STOOL TIES WHERE STOOL EXCEEDS 4" AND IS LESS THAN 7" AT APPROXIMATELY 12" SPACING

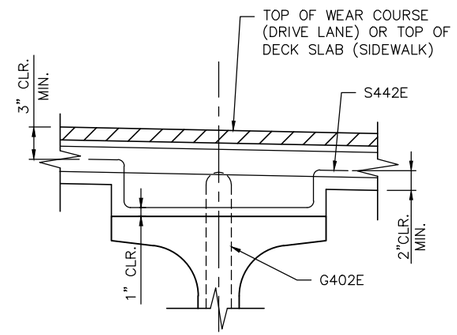

STOOL TIE DETAIL

NOTES:

DIMENSIONS ARE PERPENDICULAR TO ℄ OF BEARING, UNLESS NOTED OTHERWISE.

(1) COVER PLATE LOCATED AT SIDEWALK OVER EXPANSION DEVICE, SEE SHEETS 49 & 50.

NO.	DATE	BY	CHECK	DESIGN	REVISION / SUBMITTAL

DESIGNED BY: BAW | CHECKED BY: BLF
DRAWN BY: LMT | CHECKED BY: BLF

AECOM Kimley»Horn

90% SUBMISSION - 1/22/16

METROPOLITAN COUNCIL

SOUTHWEST Green Line LRT Extension

CIVIL - VOLUME 4G
CSAH 40 (GLENWOOD AVENUE) - EAST
BRIDGE 27C17
SUPERSTRUCTURE DETAILS 5

DISCIPLINE: STRUCTURES
SHEET NAME: CBR27C17-BRG-SUP-006-2

SHEET 32 OF 71

Jan. 18 2016 09:23 am V:\3400_ADC\CAD\SEGMENT E4\PLAN SHEETS\STRUCTURES\27C17\CBR27C17-BRG-SUP-006.dwg By: brad.wodash

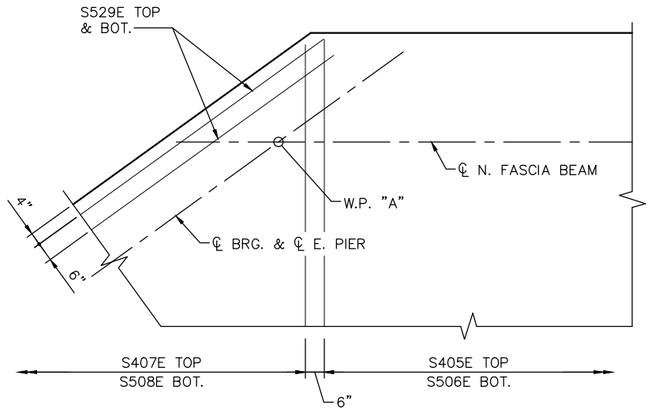

NORTHWEST CORNER DETAIL
(BOTTOM REINFORCEMENT SHOWN)

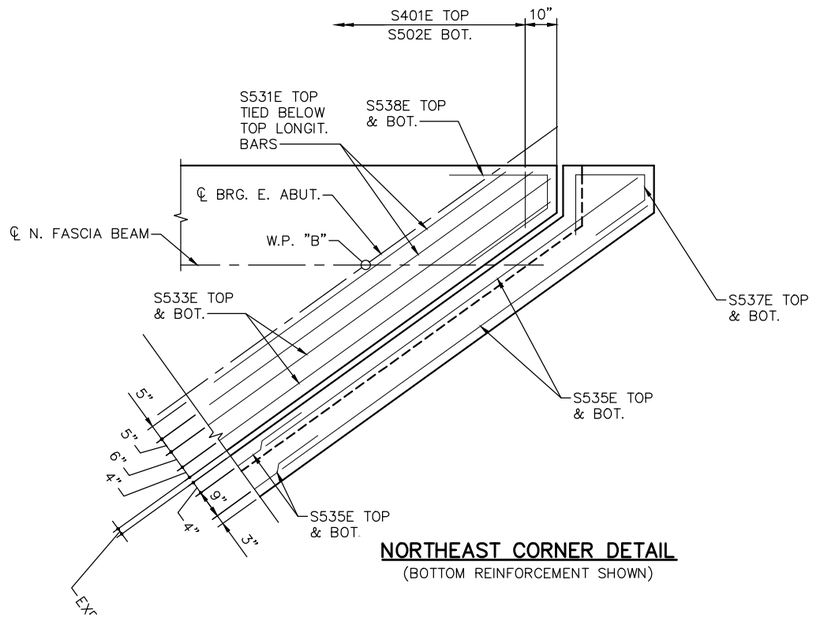

NORTHEAST CORNER DETAIL
(BOTTOM REINFORCEMENT SHOWN)

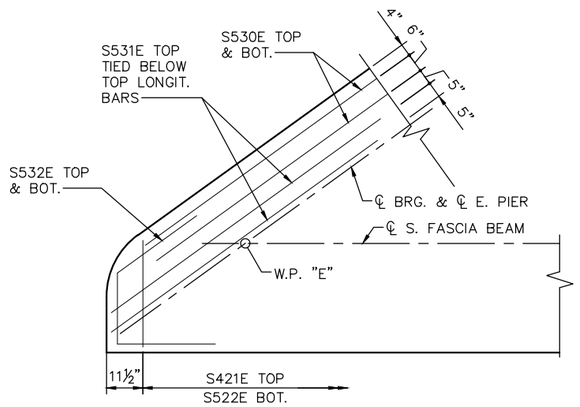

SOUTHWEST CORNER DETAIL
(BOTTOM REINFORCEMENT SHOWN)

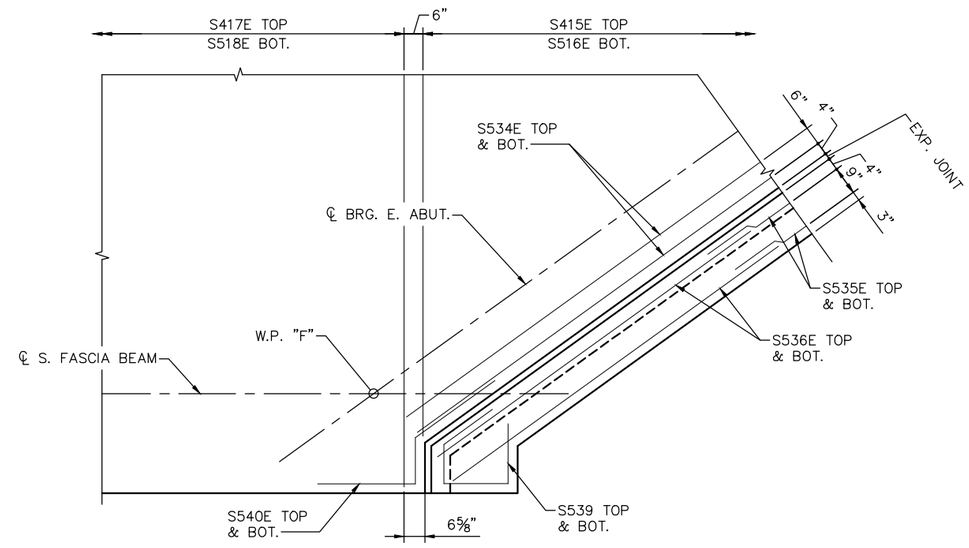

SOUTHEAST CORNER DETAIL
(BOTTOM REINFORCEMENT SHOWN)

NO.	DATE	BY	CHECK	DESIGN	REVISION / SUBMITTAL

DESIGNED BY: BAW | CHECKED BY: BLF
DRAWN BY: LMT | CHECKED BY: BLF

AECOM Kimley»Horn

90% SUBMISSION - 1/22/16

METROPOLITAN COUNCIL

SOUTHWEST Green Line LRT Extension

CIVIL - VOLUME 4G
CSAH 40 (GLENWOOD AVENUE) - EAST
BRIDGE 27C17
SUPERSTRUCTURE DETAILS 6

DISCIPLINE: STRUCTURES
SHEET NAME: CBR27C17-BRG-SUP-006-3

SHEET 33 OF 71

Jan, 18 2016 09:23 am V:\3400_ADC\CAD\SEGMENT E4\PLAN SHEETS\STRUCTURES\27C17\CBR27C17-BRG-SUP-006.dwg By: brad.wodash

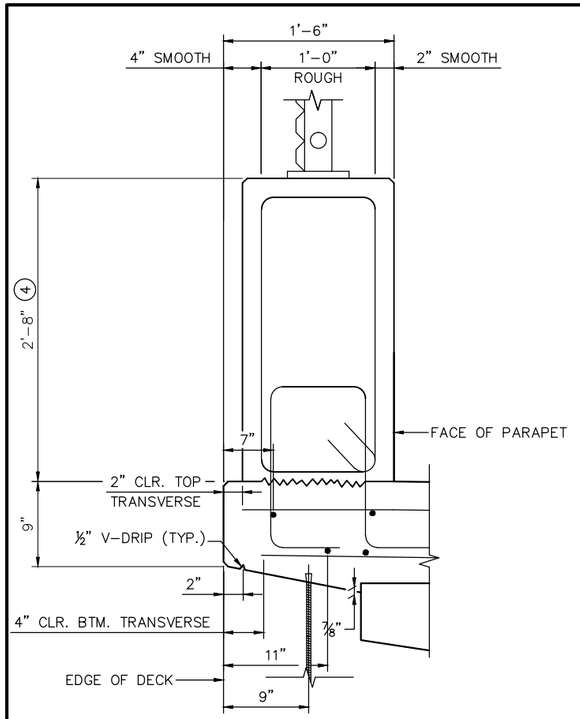

DETAIL A

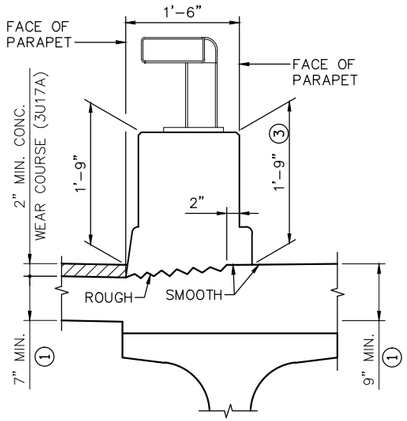

DETAIL B

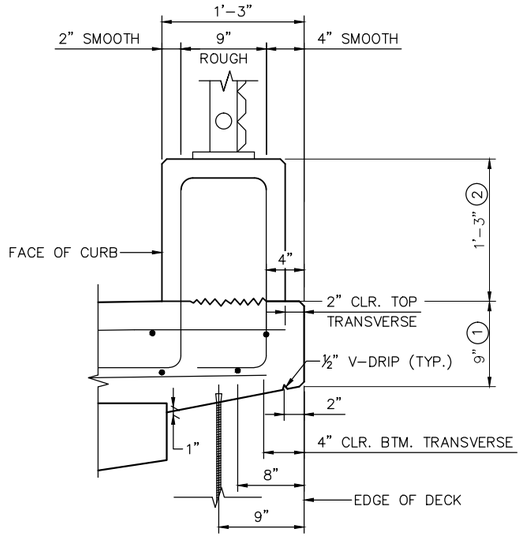

DETAIL C

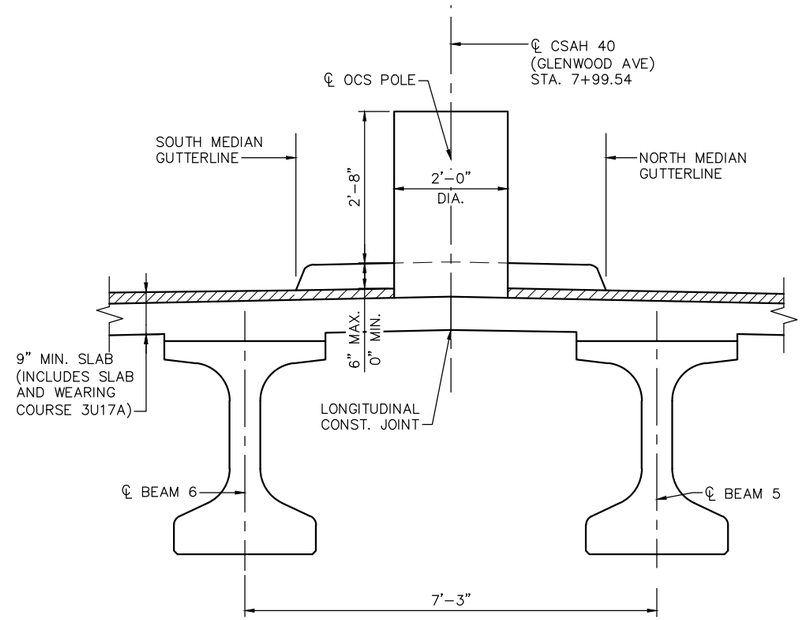

SECTION D–D

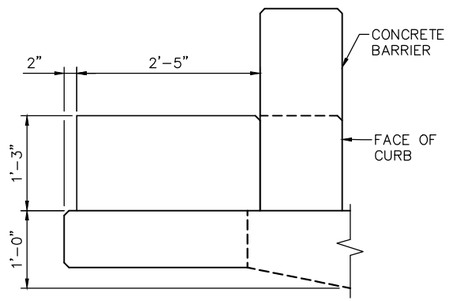

BLISTER SECTION

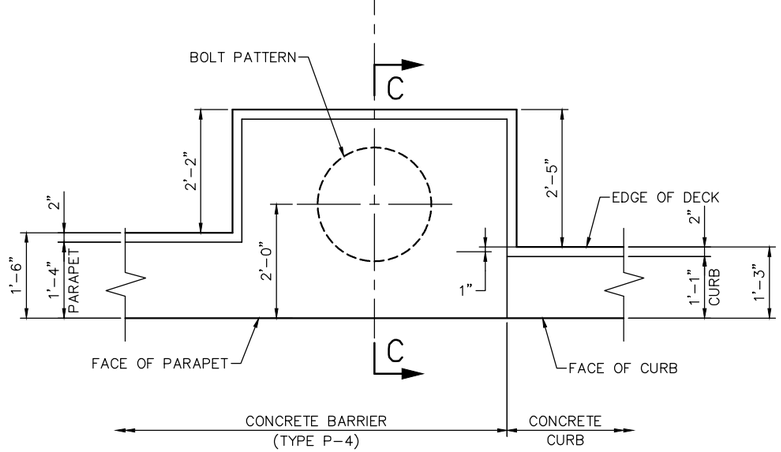

BLISTER DETAIL

NOTES:

SEE SHEET 36 & 37 FOR TOP OF DECK ELEVATIONS ALONG GUTTERLINES.

1. BRIDGE SLAB CONCRETE (3YHPC–S).
2. TYPE CURB RAILING CONCRETE (3S52).
3. TYPE P–2 (TL–4) RAILING CONCRETE (3S52).
4. TYPE MOD P–4 (TL–4) RAILING CONCRETE (3S52).

NO.	DATE	BY	CHECK	DESIGN	REVISION / SUBMITTAL

DESIGNED BY: BAW | CHECKED BY: BLF
DRAWN BY: LMT | CHECKED BY: BLF

AECOM Kimley»Horn

90% SUBMISSION - 1/22/16

METROPOLITAN COUNCIL

SOUTHWEST Green Line LRT Extension

CIVIL - VOLUME 4G
CSAH 40 (GLENWOOD AVENUE) - EAST
BRIDGE 27C17
SUPERSTRUCTURE DETAILS 7

DISCIPLINE: STRUCTURES
SHEET NAME: CBR27C17-BRG-SUP-006-4

SHEET 34 OF 71

Jan. 18 2016 09:23 am V:\3400_ADC\CAD\SEGMENT E4\PLAN SHEETS\STRUCTURES\27C17\CBR27C17-BRG-SUP-006.dwg By: brad.wodash

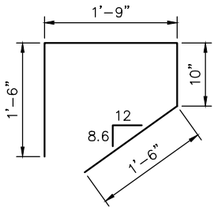

S537E

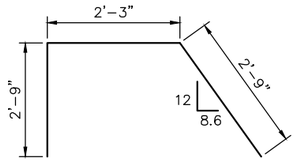

S532E

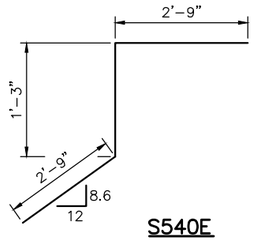

S540E

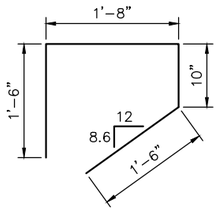

S539E

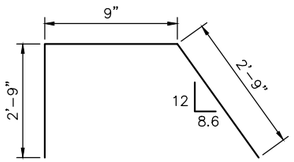

S538E

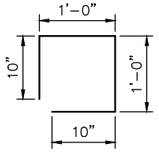

S441E

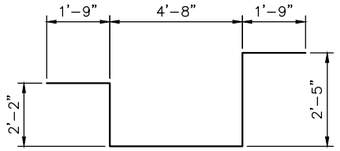

S443E

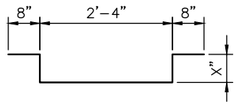

S442E

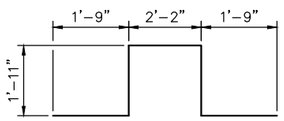

S428E

BILL OF REINFORCEMENT FOR SUPERSTRUCTURE

BAR	NO.	LENGTH	SHAPE	LOCATION
S401E	1 SET OF 100	1'-5" TO 34'-11"	STR.	TRANSVERSE, TOP
S502E	1 SET OF 100	1'-3" TO 34'-9"	STR.	TRANSVERSE, BOT.
S403E	60	34'-11"	STR.	TRANSVERSE, TOP
S504E	60	34'-9"	STR.	TRANSVERSE, BOT.
S405E	13	35'-2"	STR.	TRANSVERSE, TOP
S506E	13	35'-0"	STR.	TRANSVERSE, BOT.
S407E	1 SET OF 15	29'-11" TO 35'-0"	STR.	TRANSVERSE, TOP
S508E	1 SET OF 15	29'-11" TO 35'-0"	STR.	TRANSVERSE, BOT.
S409E	1 SET OF 72	4'-0" TO 29'-7"	STR.	TRANSVERSE, TOP
S510E	1 SET OF 72	4'-0" TO 29'-7"	STR.	TRANSVERSE, BOT.
S411E	1 SET OF 60	4'-2" TO 25'-5"	STR.	TRANSVERSE, TOP
S512E	1 SET OF 60	5'-2" TO 26'-5"	STR.	TRANSVERSE, BOT.
S413E	1 SET OF 13	25'-10" TO 30'-2"	STR.	TRANSVERSE, TOP
S514E	1 SET OF 13	26'-10" TO 31'-2"	STR.	TRANSVERSE, BOT.
S415E	1 SET OF 15	30'-6" TO 35'-6"	STR.	TRANSVERSE, TOP
S516E	1 SET OF 15	31'-6" TO 36'-6"	STR.	TRANSVERSE, BOT.
S417E	72	36'-10"	STR.	TRANSVERSE, TOP
S518E	72	37'-8"	STR.	TRANSVERSE, BOT.
S419E	4	36'-10"	STR.	TRANSVERSE, TOP
S520E	4	37'-8"	STR.	TRANSVERSE, BOT.
S421E	1 SET OF 98	2'-9" TO 37'-6"	STR.	TRANSVERSE, TOP
S522E	1 SET OF 98	2'-5" TO 37'-2"	STR.	TRANSVERSE, BOT.
S423E	58	6'-0"	STR.	BLISTER, TOP & BOT.

BILL OF REINFORCEMENT FOR SUPERSTRUCTURE

BAR	NO.	LENGTH	SHAPE	LOCATION
S424E	48	30'-8"	STR.	LONGITUDINAL, TOP
S525E	84	31'-8"	STR.	LONGITUDINAL, BOT.
S426E	48	60'-0"	STR.	LONGITUDINAL, TOP
S527E	84	60'-0"	STR.	LONGITUDINAL, BOT.
S428E	2	10'-3"	BENT	BLISTER, TOP & BOT.
S529E	4	60'-0"	STR.	BEGIN BRG., TRANS. TOP & BOT.
S530E	4	60'-0"	STR.	BEGIN BRG., TRANS. TOP & BOT.
S531E	4	10'-0"	STR.	BEGIN & END BRG., TRANS. TOP
S532E	2	7'-9"	BENT	CORNER, TOP & BOT.
S533E	1 SET OF 4	58'-6" TO 59'-6"	STR.	END BRG., TRANS. TOP & BOT.
S534E	4	60'-0"	STR.	END BRG., TRANS. TOP & BOT.
S535E	8	40'-0"	STR.	PAVING BLOCK, TOP & BOT.
S536E	4	44'-0"	STR.	PAVING BLOCK, TOP & BOT.
S537E	2	5'-7"	BENT	PAVING BLOCK, TOP & BOT.
S538E	2	6'-3"	BENT	CORNER, TOP & BOT.
S539E	2	5'-6"	BENT	PAVING BLOCK, TOP & BOT.
S540E	2	6'-9"	BENT	CORNER, TOP & BOT.
S441E	116	3'-8"	BENT	PAVING BLOCK, TIE
S442E	TBD	'-"	BENT	STOOL TIE
S443E	4	12'-9"	BENT	BLISTER, TOP & BOT.

Jan. 18 2016 09:23 am V:\3400_ADC\CAD\SEGMENT E4\PLAN SHEETS\STRUCTURES\27C17\CBR27C17-BRG-SUP-006.dwg By: brad.wodash

NO.	DATE	BY	CHECK	DESIGN	REVISION / SUBMITTAL

DESIGNED BY: BAW | CHECKED BY: BLF
DRAWN BY: LMT | CHECKED BY: BLF

AECOM Kimley»Horn

90% SUBMISSION - 1/22/16

METROPOLITAN COUNCIL

SOUTHWEST Green Line LRT Extension

CIVIL - VOLUME 4G
CSAH 40 (GLENWOOD AVENUE) - EAST
BRIDGE 27C17
SUPERSTRUCTURE DETAILS 8

DISCIPLINE: STRUCTURES

SHEET NAME: CBR27C17-BRG-SUP-006-5

SHEET 35 OF 71

	S. FACE OF N. CURB	
	DISTANCE	TOP OF DECK EL.
①	0+00.00	851.47
	0+05.00	851.39
	0+10.00	851.29
	0+15.00	851.19
	0+20.00	851.07
	0+25.00	850.95
	0+30.00	850.83
	0+35.00	850.69
	0+40.00	850.55
	0+45.00	850.40
	0+50.00	850.24
	0+55.00	850.07
	0+60.00	849.90
	0+65.00	849.72
	0+70.00	849.53
	0+75.00	849.32
	0+80.00	849.12
②	0+83.00	849.00

	B1 - NORTH FASCIA	
	DISTANCE	TOP OF DECK EL.
①	0+00.00	851.50
	0+05.00	851.41
	0+10.00	851.32
	0+15.00	851.22
	0+20.00	851.11
	0+25.00	850.99
	0+30.00	850.86
	0+35.00	850.73
	0+40.00	850.58
	0+45.00	850.43
	0+50.00	850.27
	0+55.00	850.10
	0+60.00	849.92
	0+65.00	849.73
	0+70.00	849.54
	0+75.00	849.35
	0+80.00	849.16
②	0+83.00	849.05

	B2	
	DISTANCE	TOP OF DECK EL.
①	0+00.00	851.44
	0+05.00	851.41
	0+10.00	851.37
	0+15.00	851.31
	0+20.00	851.23
	0+25.00	851.15
	0+30.00	851.04
	0+35.00	850.93
	0+40.00	850.80
	0+45.00	850.65
	0+50.00	850.49
	0+55.00	850.32
	0+60.00	850.15
	0+65.00	849.98
	0+70.00	849.80
	0+75.00	849.63
	0+80.00	849.46
②	0+83.00	849.35

	S. FACE OF N. PARAPET	
	DISTANCE	TOP OF DECK EL.
①	0+00.00	851.41
	0+05.00	851.37
	0+10.00	851.31
	0+15.00	851.25
	0+20.00	851.18
	0+25.00	851.09
	0+30.00	851.00
	0+35.00	850.89
	0+40.00	850.78
	0+45.00	850.65
	0+50.00	850.52
	0+55.00	850.38
	0+60.00	850.22
	0+65.00	850.06
	0+70.00	849.89
	0+75.00	849.70
	0+80.00	849.51
②	0+83.00	849.39

	B3	
	DISTANCE	TOP OF DECK EL.
①	0+00.00	851.42
	0+05.00	851.39
	0+10.00	851.35
	0+15.00	851.31
	0+20.00	851.26
	0+25.00	851.19
	0+30.00	851.12
	0+35.00	851.02
	0+40.00	850.92
	0+45.00	850.80
	0+50.00	850.67
	0+55.00	850.53
	0+60.00	850.37
	0+65.00	850.21
	0+70.00	850.03
	0+75.00	849.86
	0+80.00	849.69
②	0+83.00	849.58

	B4	
	DISTANCE	TOP OF DECK EL.
①	0+00.00	851.24
	0+05.00	851.23
	0+10.00	851.22
	0+15.00	851.21
	0+20.00	851.21
	0+25.00	851.19
	0+30.00	851.16
	0+35.00	851.10
	0+40.00	851.04
	0+45.00	850.95
	0+50.00	850.85
	0+55.00	850.73
	0+60.00	850.60
	0+65.00	850.45
	0+70.00	850.30
	0+75.00	850.16
	0+80.00	850.01
②	0+83.00	849.92

	B5	
	DISTANCE	TOP OF DECK EL.
①	0+00.00	851.25
	0+05.00	851.23
	0+10.00	851.20
	0+15.00	851.18
	0+20.00	851.16
	0+25.00	851.14
	0+30.00	851.11
	0+35.00	851.09
	0+40.00	851.05
	0+45.00	851.00
	0+50.00	850.93
	0+55.00	850.86
	0+60.00	850.77
	0+65.00	850.67
	0+70.00	850.56
	0+75.00	850.44
	0+80.00	850.32
②	0+83.00	850.25

	PROFILE GRADE CSAH 40 (GLENWOOD AVE)	
	DISTANCE	TOP OF DECK EL.
①	0+00.00	851.21
	0+05.00	851.17
	0+10.00	851.14
	0+15.00	851.11
	0+20.00	851.08
	0+25.00	851.04
	0+30.00	851.01
	0+35.00	850.98
	0+40.00	850.93
	0+45.00	850.88
	0+50.00	850.83
	0+55.00	850.76
	0+60.00	850.69
	0+65.00	850.61
	0+70.00	850.52
	0+75.00	850.43
	0+80.00	850.33
②	0+83.00	850.26

	B6	
	DISTANCE	TOP OF DECK EL.
①	0+00.00	851.21
	0+05.00	851.18
	0+10.00	851.14
	0+15.00	851.11
	0+20.00	851.07
	0+25.00	851.04
	0+30.00	851.01
	0+35.00	850.96
	0+40.00	850.92
	0+45.00	850.87
	0+50.00	850.82
	0+55.00	850.75
	0+60.00	850.68
	0+65.00	850.61
	0+70.00	850.52
	0+75.00	850.43
	0+80.00	850.34
②	0+83.00	850.29

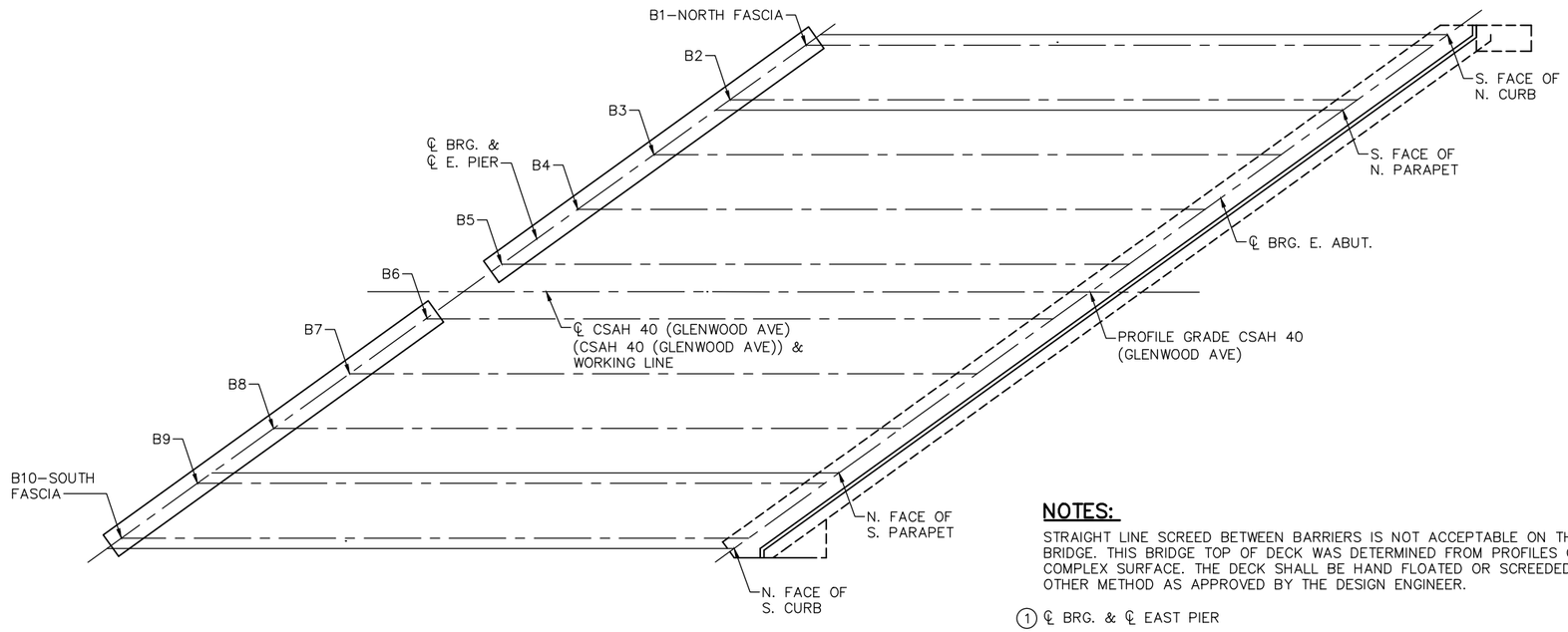

DECK PLAN

NOTES:

STRAIGHT LINE SCREED BETWEEN BARRIERS IS NOT ACCEPTABLE ON THIS BRIDGE. THIS BRIDGE TOP OF DECK WAS DETERMINED FROM PROFILES OF A COMPLEX SURFACE. THE DECK SHALL BE HAND FLOATED OR SCREEDED BY OTHER METHOD AS APPROVED BY THE DESIGN ENGINEER.

① ℄ BRG. & ℄ EAST PIER

② ℄ BRG. EAST ABUTMENT

NO.	DATE	BY	CHECK	DESIGN	REVISION / SUBMITTAL

DESIGNED BY: KAE CHECKED BY: BLF

DRAWN BY: KAE CHECKED BY: BLF

AECOM Kimley»Horn

90% SUBMISSION - 01/22/16

METROPOLITAN COUNCIL

SOUTHWEST Green Line LRT Extension

CIVIL - VOLUME 4G
CSAH 40 (GLENWOOD AVENUE) - EAST
BRIDGE 27C17
SUPERSTRUCTURE DETAILS 9

DISCIPLINE: STRUCTURES

SHEET NAME: CBR27C17-BRG-SUP-007 -1

SHEET 36 OF 71

Jan, 18 2016 09:24 am V:\3400_ADC\CAD\SEGMENT E4\PLAN SHEETS\STRUCTURES\27C17\CBR27C17-BRG-SUP-010.dwg By: brad.wodash

	B7	
	DISTANCE	TOP OF DECK EL.
①	0+00.00	851.14
	0+05.00	851.12
	0+10.00	851.10
	0+15.00	851.08
	0+20.00	851.07
	0+25.00	851.05
	0+30.00	851.03
	0+35.00	851.01
	0+40.00	850.98
	0+45.00	850.94
	0+50.00	850.88
	0+55.00	850.81
	0+60.00	850.73
	0+65.00	850.63
	0+70.00	850.52
	0+75.00	850.39
	0+80.00	850.25
②	0+83.00	850.17

	B8	
	DISTANCE	TOP OF DECK EL.
①	0+00.00	851.07
	0+05.00	851.08
	0+10.00	851.09
	0+15.00	851.08
	0+20.00	851.07
	0+25.00	851.06
	0+30.00	851.03
	0+35.00	851.00
	0+40.00	850.95
	0+45.00	850.90
	0+50.00	850.85
	0+55.00	850.78
	0+60.00	850.71
	0+65.00	850.63
	0+70.00	850.54
	0+75.00	850.45
	0+80.00	850.36
②	0+83.00	850.31

	N. FACE OF S. PARAPET	
	DISTANCE	TOP OF DECK EL.
①	0+00.00	851.03
	0+05.00	851.07
	0+10.00	851.10
	0+15.00	851.11
	0+20.00	851.12
	0+25.00	851.12
	0+30.00	851.11
	0+35.00	851.09
	0+40.00	851.06
	0+45.00	851.01
	0+50.00	850.96
	0+55.00	850.90
	0+60.00	850.83
	0+65.00	850.75
	0+70.00	850.66
	0+75.00	850.56
	0+80.00	850.46
②	0+83.00	850.41

	B9	
	DISTANCE	TOP OF DECK EL.
①	0+00.00	850.99
	0+05.00	851.01
	0+10.00	851.02
	0+15.00	851.04
	0+20.00	851.05
	0+25.00	851.04
	0+30.00	851.03
	0+35.00	851.01
	0+40.00	850.99
	0+45.00	850.95
	0+50.00	850.91
	0+55.00	850.86
	0+60.00	850.80
	0+65.00	850.74
	0+70.00	850.67
	0+75.00	850.60
	0+80.00	850.53
②	0+83.00	850.48

	B10 - SOUTH FASCIA	
	DISTANCE	TOP OF DECK EL.
①	0+00.00	850.92
	0+05.00	850.93
	0+10.00	850.93
	0+15.00	850.94
	0+20.00	850.94
	0+25.00	850.95
	0+30.00	850.96
	0+35.00	850.96
	0+40.00	850.97
	0+45.00	850.97
	0+50.00	850.97
	0+55.00	850.96
	0+60.00	850.94
	0+65.00	850.91
	0+70.00	850.88
	0+75.00	850.84
	0+80.00	850.79
②	0+83.00	850.76

	N. FACE OF S. CURB	
	DISTANCE	TOP OF DECK EL.
①	0+00.00	850.94
	0+05.00	850.99
	0+10.00	851.03
	0+15.00	851.06
	0+20.00	851.09
	0+25.00	851.10
	0+30.00	851.12
	0+35.00	851.12
	0+40.00	851.12
	0+45.00	851.11
	0+50.00	851.09
	0+55.00	851.06
	0+60.00	851.03
	0+65.00	850.99
	0+70.00	850.94
	0+75.00	850.89
	0+80.00	850.82
②	0+83.00	850.77

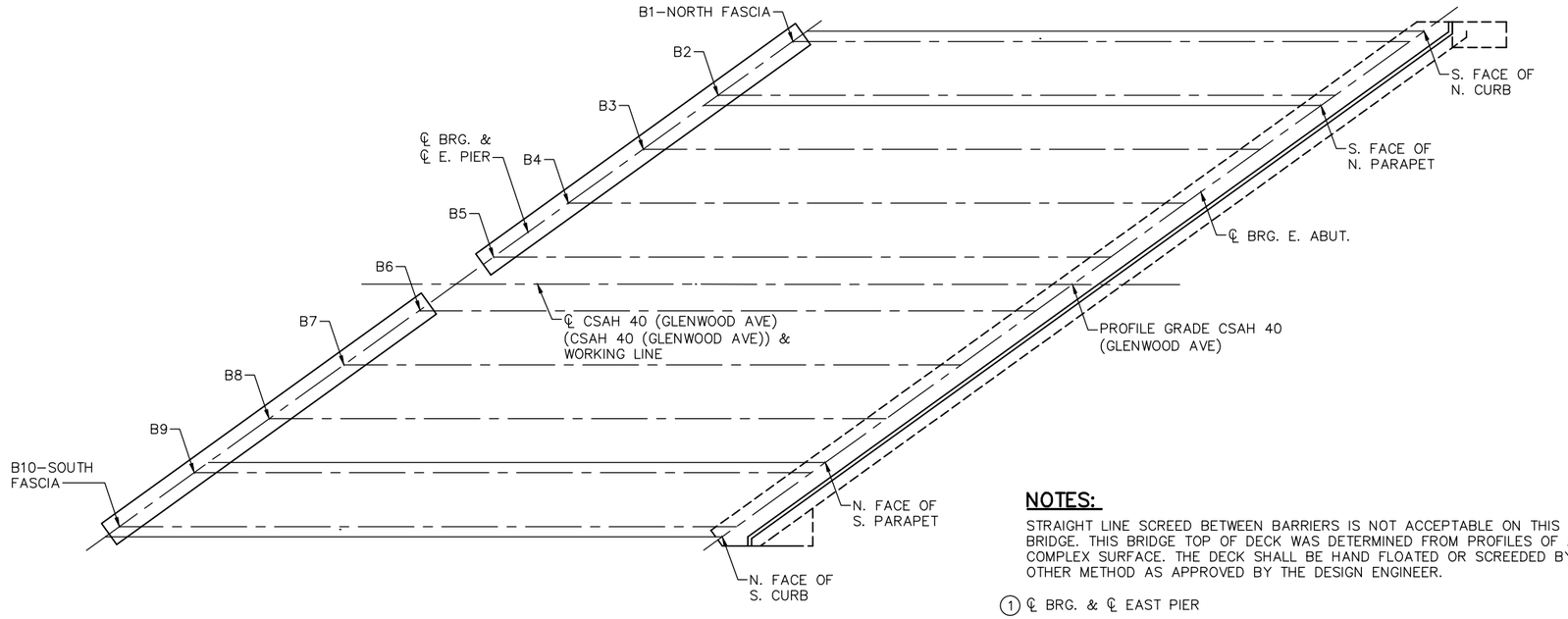

DECK PLAN

NOTES:

STRAIGHT LINE SCREED BETWEEN BARRIERS IS NOT ACCEPTABLE ON THIS BRIDGE. THIS BRIDGE TOP OF DECK WAS DETERMINED FROM PROFILES OF A COMPLEX SURFACE. THE DECK SHALL BE HAND FLOATED OR SCREEDED BY OTHER METHOD AS APPROVED BY THE DESIGN ENGINEER.

① ℄ BRG. & ℄ EAST PIER

② ℄ BRG. EAST ABUTMENT

NO.	DATE	BY	CHECK	DESIGN	REVISION / SUBMITTAL

DESIGNED BY: KAE | CHECKED BY: BLF
DRAWN BY: KAE | CHECKED BY: BLF

AECOM Kimley»Horn

90% SUBMISSION - 01/22/16

METROPOLITAN COUNCIL

SOUTHWEST Green Line LRT Extension

CIVIL - VOLUME 4G
CSAH 40 (GLENWOOD AVENUE) - EAST
BRIDGE 27C17
SUPERSTRUCTURE DETAILS 10

DISCIPLINE: STRUCTURES

SHEET NAME: CBR27C17-BRG-SUP-007-2

SHEET 37 OF 71

Jan, 18 2016 09:24 am v:\3400_ADC\CAD\SEGMENT E4\PLAN SHEETS\STRUCTURES\27C17\CBR27C17-BRG-SUP-010.dwg By: brad.wodash

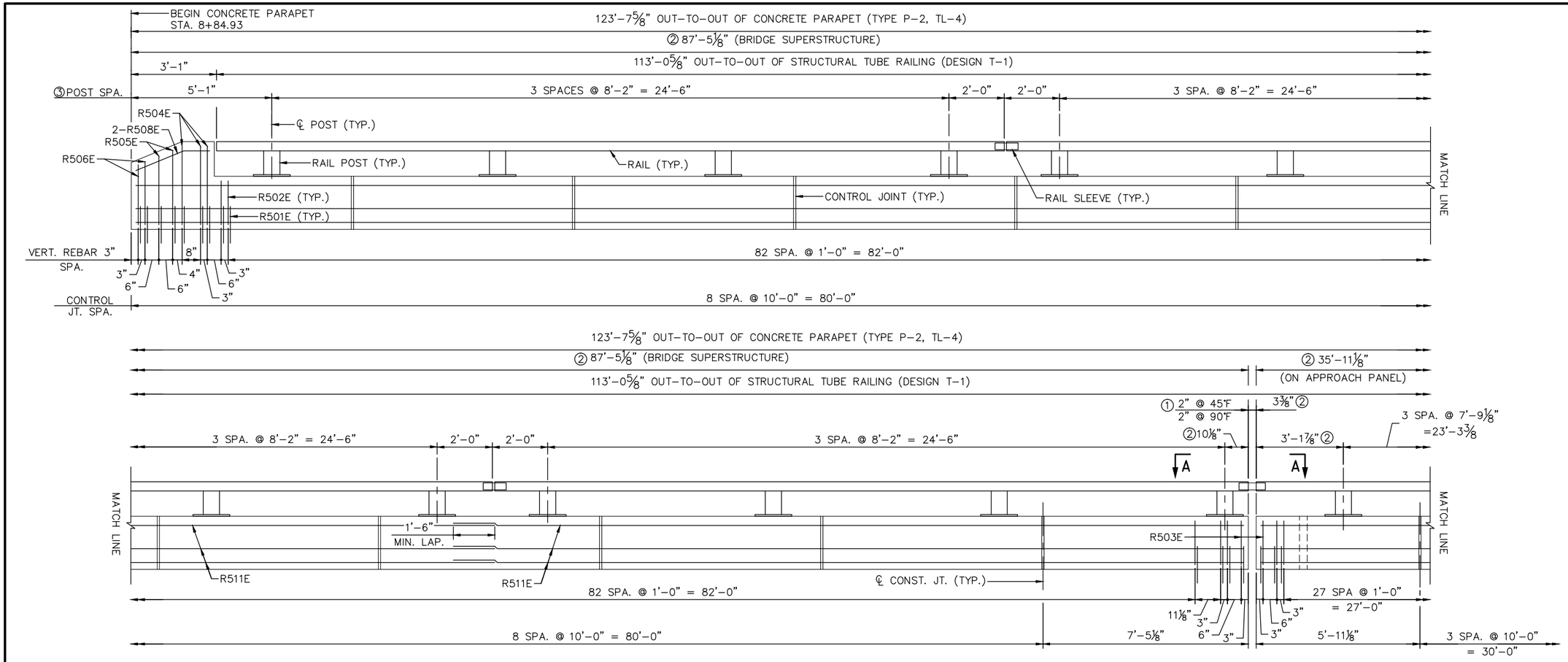

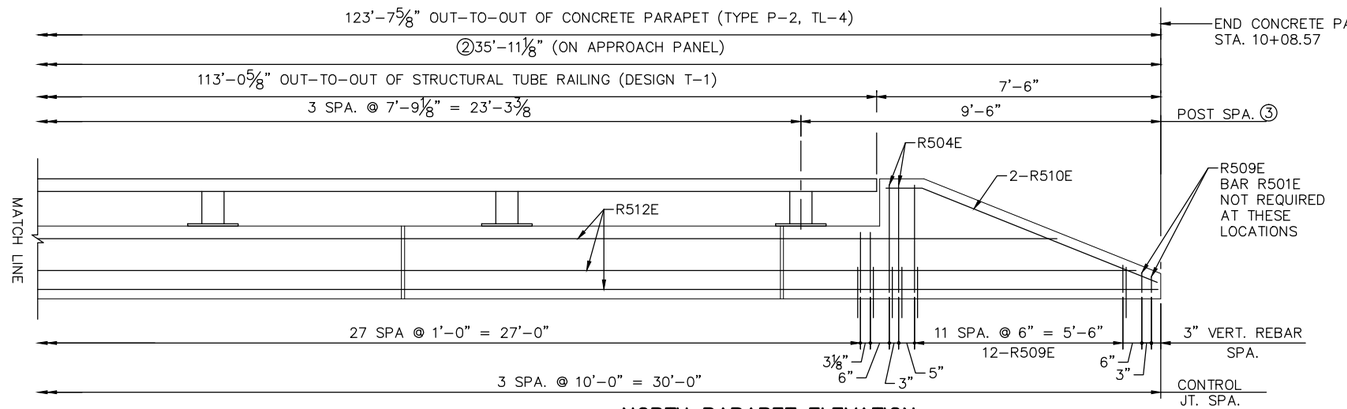

NORTH PARAPET ELEVATION

INSIDE ELEVATON SHOWN (LOOKING NORTH)
CONCRETE WEARING SURFACE NOT SHOWN

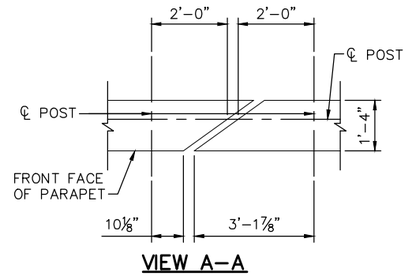

VIEW A-A

NOTES:

1. PERPENDICULAR TO CENTERLINE OF EXPANSION JOINT.
2. DIMENSION ALONG FRONT FACE OF PANEL.
3. PERPENDICULAR TO FRONT FACE OF PARAPET.

NO.	DATE	BY	CHECK	DESIGN	REVISION / SUBMITTAL

DESIGNED BY: BAW | CHECKED BY: BLF
DRAWN BY: LMT | CHECKED BY: BLF

AECOM Kimley»Horn

90% SUBMISSION - 01/22/16

METROPOLITAN COUNCIL

SOUTHWEST Green Line LRT Extension

CIVIL - VOLUME 4G
CSAH 40 (GLENWOOD AVENUE) - EAST
BRIDGE 27C17
RAILING DETAILS 1

DISCIPLINE: STRUCTURES
SHEET NAME: CBR27C17-BRG-RAL-001-1

SHEET 38 OF 71

Jan. 18 2016 09:24 am V:\3400_ADC\CAD\SEGMENT E4\PLAN SHEETS\STRUCTURES\27C17\CBR27C17-BRG-RAL-001.dwg By: brad.wodash

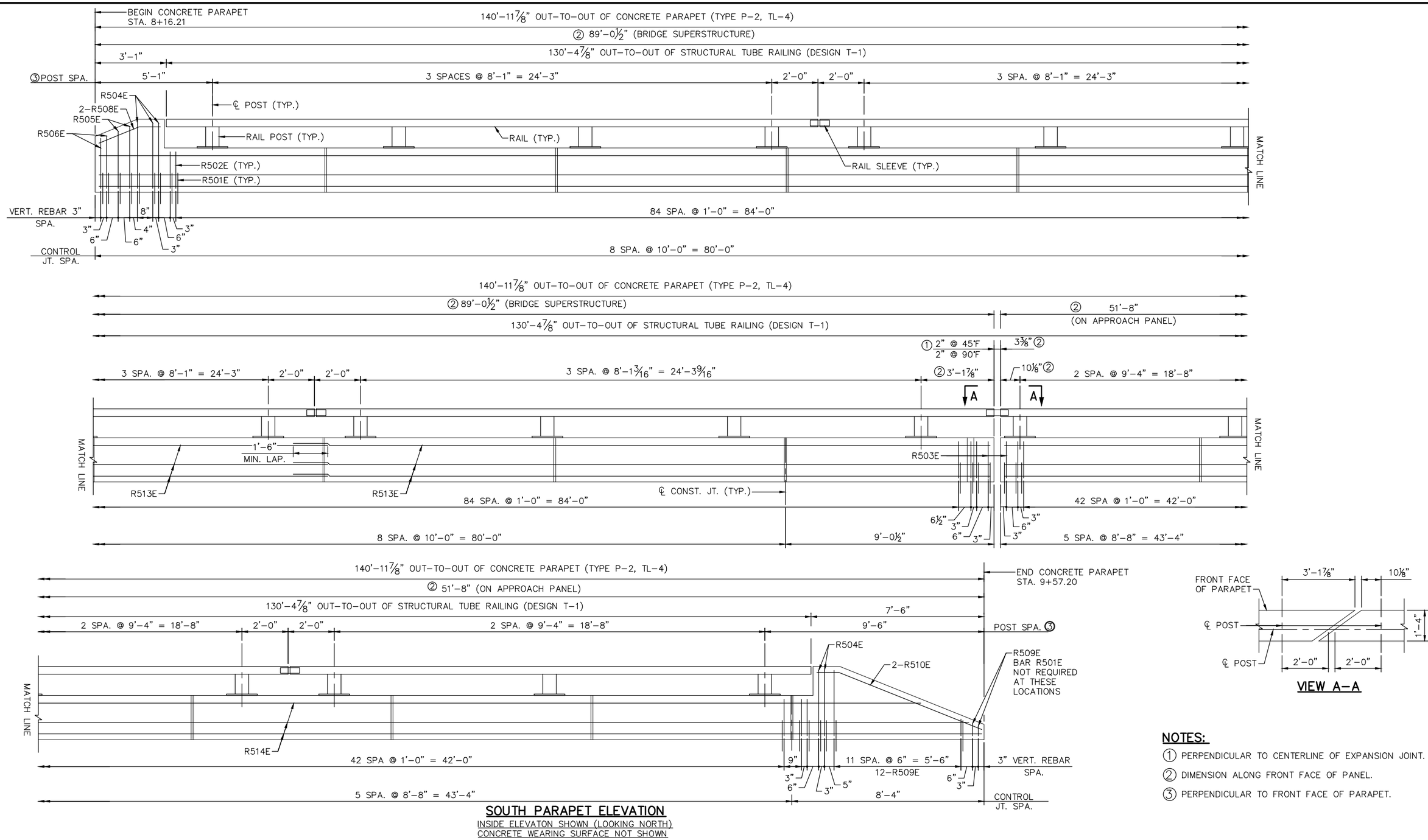

SOUTH PARAPET ELEVATION

INSIDE ELEVATON SHOWN (LOOKING NORTH)
CONCRETE WEARING SURFACE NOT SHOWN

VIEW A-A

NOTES:

① PERPENDICULAR TO CENTERLINE OF EXPANSION JOINT.
② DIMENSION ALONG FRONT FACE OF PANEL.
③ PERPENDICULAR TO FRONT FACE OF PARAPET.

NO.	DATE	BY	CHECK	DESIGN	REVISION / SUBMITTAL

DESIGNED BY: BAW | CHECKED BY: BLF
DRAWN BY: LMT | CHECKED BY: BLF

AECOM Kimley»Horn

90% SUBMISSION - 01/22/16

METROPOLITAN COUNCIL

SOUTHWEST Green Line LRT Extension

CIVIL - VOLUME 4G
CSAH 40 (GLENWOOD AVENUE) - EAST
BRIDGE 27C17
RAILING DETAILS 2

DISCIPLINE: STRUCTURES
SHEET NAME: CBR27C17-BRG-RAL-001-2

SHEET 39 OF 71

Jan, 18 2016 09:24 am V:\3400_ADC\CAD\SEGMENT E4\PLAN SHEETS\STRUCTURES\27C17\CBR27C17-BRG-RAL-001.dwg By: brad.wodash

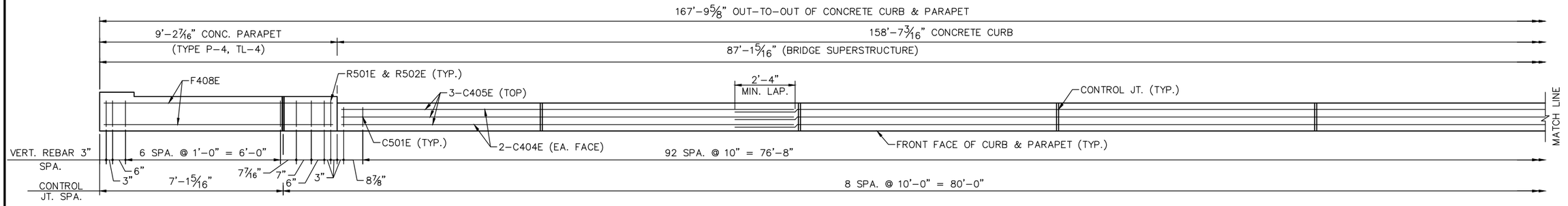

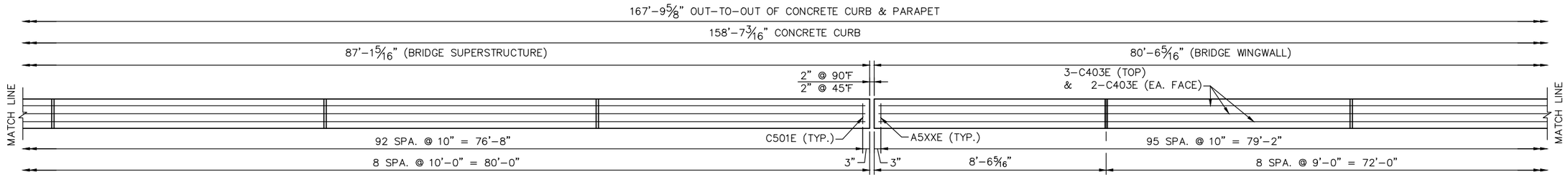

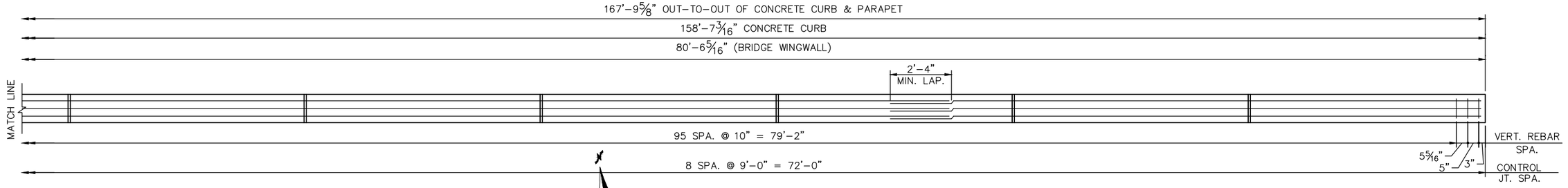

NORTH CURB/PARAPET PLAN
(BLISTER NOT SHOWN)

NO.	DATE	BY	CHECK	DESIGN	REVISION / SUBMITTAL

DESIGNED BY: BAW CHECKED BY: BLF
DRAWN BY: LMT CHECKED BY: BLF

AECOM Kimley»Horn

90% SUBMISSION - 01/22/16

METROPOLITAN COUNCIL

SOUTHWEST Green Line LRT Extension

CIVIL - VOLUME 4G
CSAH 40 (GLENWOOD AVENUE) - EAST
BRIDGE 27C17
RAILING DETAILS 3

DISCIPLINE: STRUCTURES
SHEET NAME: CBR27C17-BRG-RAL-001-3

SHEET 40 OF 71

Jan, 18 2016 09:24 am V:\3400_ADC\CAD\SEGMENT E4\PLAN SHEETS\STRUCTURES\27C17\CBR27C17-BRG-RAL-001.dwg By: brad.wodash

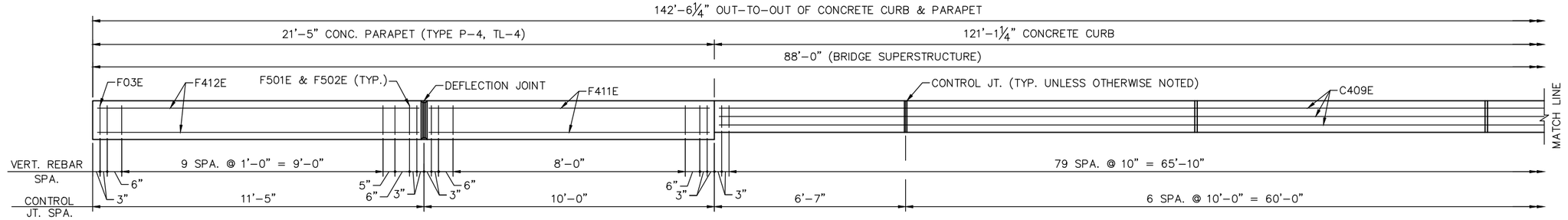

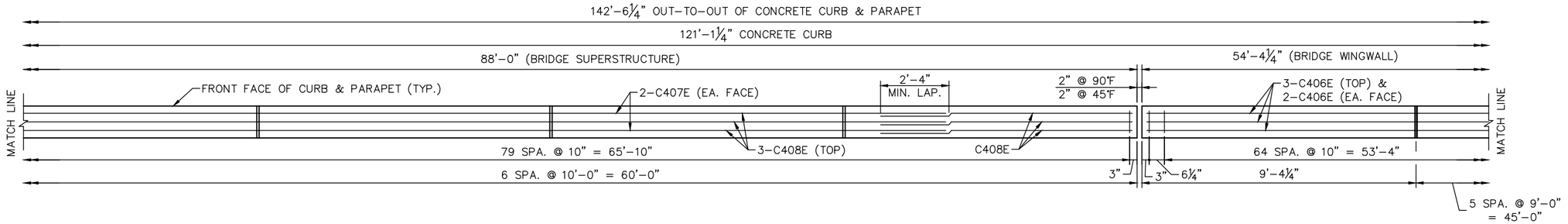

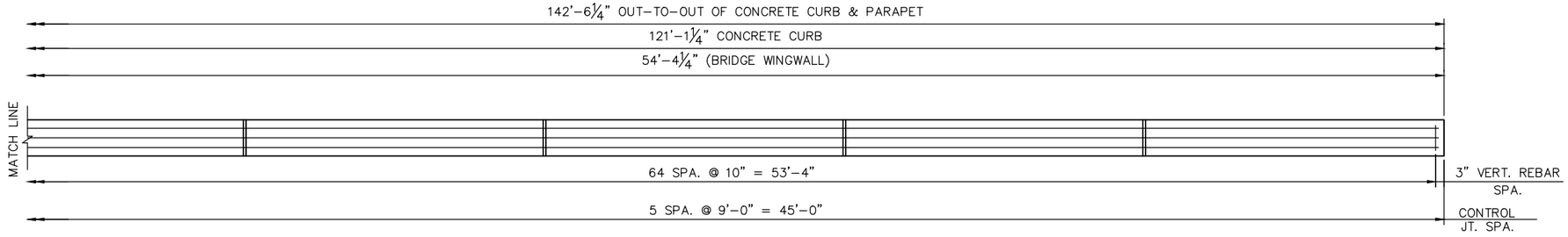

SOUTH CURB/PARAPET PLAN
(BLISTER NOT SHOWN)

NO.	DATE	BY	CHECK	DESIGN	REVISION / SUBMITTAL

DESIGNED BY: BAW | CHECKED BY: BLF
DRAWN BY: LMT | CHECKED BY: BLF

AECOM Kimley»Horn

90% SUBMISSION - 01/22/16

METROPOLITAN COUNCIL

SOUTHWEST Green Line LRT Extension

CIVIL - VOLUME 4G
CSAH 40 (GLENWOOD AVENUE) - EAST
BRIDGE 27C17
RAILING DETAILS 4

DISCIPLINE: STRUCTURES
SHEET NAME: CBR27C17-BRG-RAL-001-4

SHEET 41 OF 71

Jan, 18 2016 09:24 am V:\3400_ADC\CAD\SEGMENT E4\PLAN SHEETS\STRUCTURES\27C17\CBR27C17-BRG-RAL-001.dwg By: brad.wodash

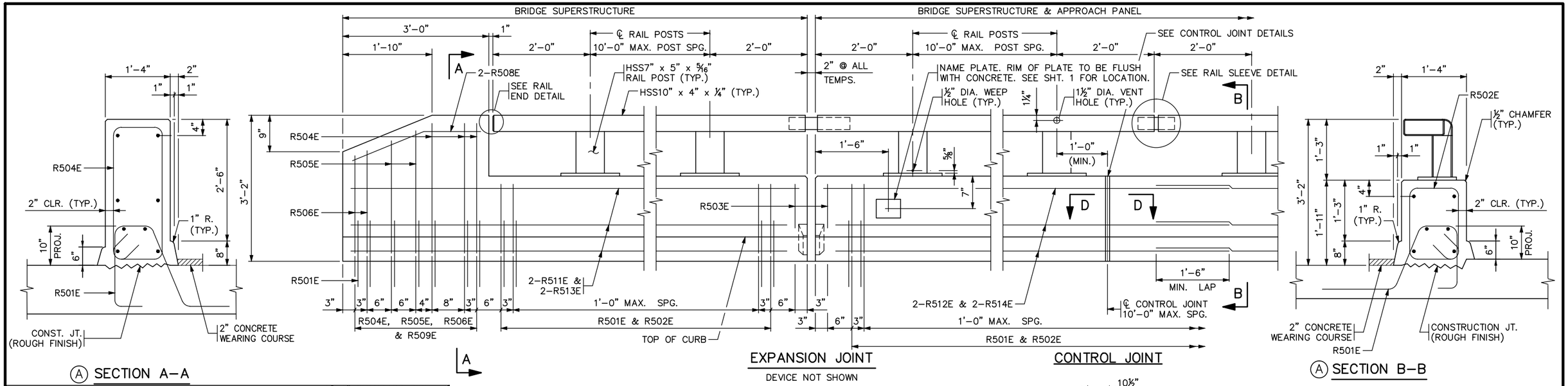

Ⓐ SECTION A–A

Ⓐ SECTION B–B

EXPANSION JOINT
DEVICE NOT SHOWN

CONTROL JOINT

Ⓐ INSIDE ELEVATION OF RAILING
CONCRETE WEARING COURSE NOT SHOWN

RAIL MEETS TEST LEVEL 4 REQUIREMENTS OF NCHRP REPORT 350

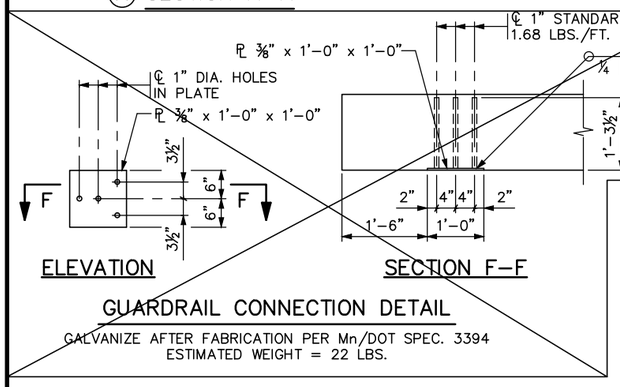

ELEVATION

SECTION F–F

GUARDRAIL CONNECTION DETAIL

GALVANIZE AFTER FABRICATION PER Mn/DOT SPEC. 3394
ESTIMATED WEIGHT = 22 LBS.

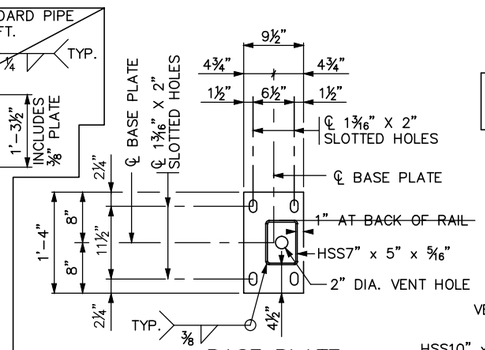

BASE PLATE

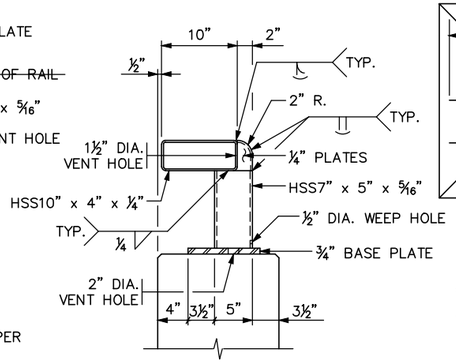

STRUCTURAL TUBE RAIL DETAIL

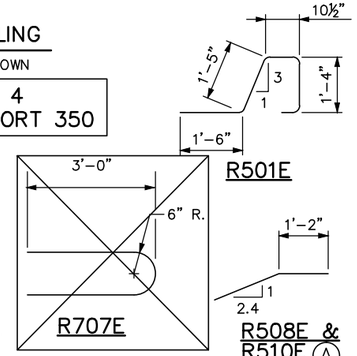

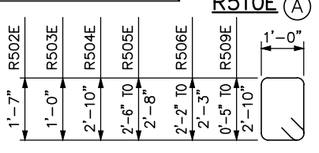

R502E, R503E, R504E, R505E, R506E & R509E Ⓐ

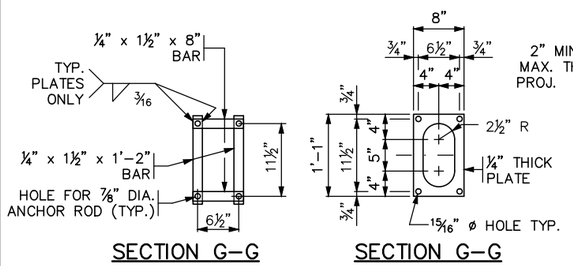

SECTION G–G
ANCHOR BAR ALTERNATE

SECTION G–G
ANCHOR PLATE ALTERNATE

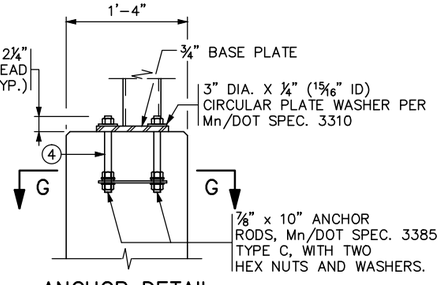

ANCHOR DETAIL

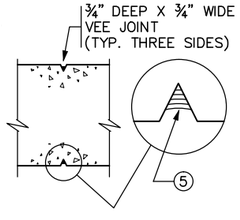

SECTION D–D

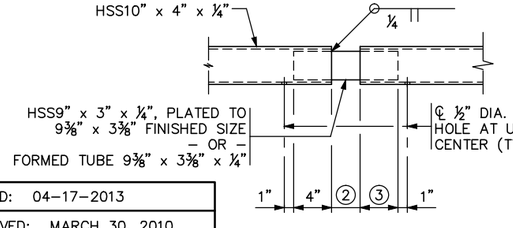

RAIL SLEEVE DETAIL

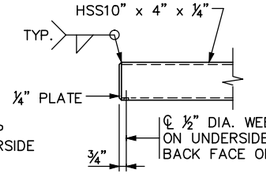

RAIL END DETAIL

CONTROL JOINT DETAILS

BILL OF REINFORCEMENT FOR PARAPET

BAR	NO.	LENGTH	SHAPE	LOCATION
R501E	296	5'-7"	BENT	PARAPET, VERTICAL
R502E	250	6'-1"	BENT	PARAPET, VERTICAL
R503E	4	4'-11"	BENT	PARAPET, VERTICAL
R504E	10	8'-7"	BENT	PARAPET, VERTICAL
R505E	1 SET OF 4	7'-11" TO 8'-3"	BENT	PARAPET, VERTICAL
R506E	1 SET OF 4	7'-3" TO 7'-5"	BENT	PARAPET, VERTICAL
~~R507E~~	~~0~~	~~0'-0"~~	~~0~~	~~0~~
R508E	4	2'-9"	BENT	PARAPET END LONGIT.
Ⓐ R509E	1 SET OF 28	3'-9" TO 8'-7"	BENT	PARAPET, VERTICAL
Ⓐ R510E	4	6'-8"	BENT	PARAPET END LONGIT.
R511E	12	44'-4"	STR.	PARAPET, LONGIT.
R512E	1 SET OF 6	33'-0" TO 35'-7"	STR.	PARAPET, LONGIT.
R513E	12	45'-1"	STR.	PARAPET, LONGIT.
R514E	1 SET OF 6	48'-9" TO 51'-4"	STR.	PARAPET, LONGIT.

GENERAL NOTES

FOR PAYMENT OF "TYPE P-2 (TL-4) BARRIER CONCRETE (3S52)" MEASURE LENGTH OF CONCRETE BARRIER BETWEEN END FACES. CONCRETE PARAPET = 396 LBS./FT. (0.098 CU. YDS./FT.)

FOR "STRUCTURAL TUBE RAILING DESIGN T-1" MEASURE LENGTH OF RAIL FROM END TO END OF TUBING. DO NOT DEDUCT FOR JOINTS.

FINISH ALL EDGES OF RAIL WITH ½" CHAMFER, EXCEPT WHERE OTHERWISE NOTED.

MAX. SPACING OF CONCRETE CONTROL JOINTS SHALL BE 10 FT.

PROVIDE CORRECT ALIGNMENT FOR ANCHORAGES BY PLACING THEM ACCURATELY AND NORMAL TO GRADE. SEE SPECIAL PROVISIONS.

PROVIDE STRUCTURAL STEEL AND PLATE WASHERS PER Mn/DOT SPEC. 3310. PROVIDE STRUCTURAL TUBES PER A.S.T.M. A500, GRADE B AS SPECIFIED IN Mn/DOT SPEC. 3361.

GALVANIZE BOLTS, NUTS, AND WASHERS PER Mn/DOT SPEC. 3392.

GALVANIZE ALL OTHER STRUCTURAL STEEL PER Mn/DOT SPEC. 3394, AFTER FABRICATION.

~~PROVIDE GUARDRAIL CONNECTION STRUCTURAL STEEL PER Mn/DOT SPEC. 3306.~~

~~GUARDRAIL CONNECTION AND NAME PLATE IS INCIDENTAL TO "TYPE P-2 (TL-4) BARRIER CONCRETE (3Y46 OR 3Y46A)".~~

~~PRICE BID FOR "STRUCTURAL TUBE RAILING DESIGN T-1" INCLUDES ANCHORAGES AND ALL MATERIAL ABOVE TOP OF CONCRETE BARRIER.~~

~~ALL MATERIAL IN THE CONCRETE BARRIER IS LISTED IN SUMMARY OF QUANTITIES FOR SUPERSTRUCTURE.~~

SEE SPECIAL PROVISIONS FOR PAINT REQUIREMENTS.

CONTINUOUSLY GROUND THE METAL RAILING AS DIRECTED IN THE SPECIAL PROVISIONS. REFER TO THE ELECTRICAL PLANS AND ELECTRICAL SPECIAL PROVISIONS FOR DETAILS REGARDING BONDING MULTIPLE ELECTRICAL GROUNDING SYSTEMS.

① MAKE THICKNESS THE SAME AS SLAB IN SECTION B–B.

② 1" AT RAILING JOINTS. AT EXPANSION JOINTS, MAKE 1" LARGER THAN GAP IN EXPANSION JOINTS.

③ 5" AT RAILING JOINTS AND 8" AT EXPANSION JOINTS.

④ SUBSTITUTION OF CHEMICAL ANCHOR RODS FOR CAST-IN-PLACE ANCHORAGE IS NOT PERMITTED.

⑤ SEE SPECIAL PROVISIONS FOR JOINT SEALING REQUIREMENTS.

DRAFT-WORK IN PROCESS

FIG. 5–397.157 (MOD.)

REVISED: 04–17–2013

APPROVED: MARCH 30, 2010
Daniel L. Morgan
STATE BRIDGE ENGINEER

SHEET MODIFICATION:
Ⓐ DENOTES MODIFICATION TO STANDARD SHEET

CERTIFIED BY _____ XX\XX\XX
LICENSED PROFESSIONAL ENGINEER — DATE
NAME: ENGINEER LIC. NO. #####

TITLE: STRUCTURAL TUBE RAILING (DESIGN T-1) AND CONCRETE PARAPET (TYPE P-2, TL-4) (WITH INTEGRAL END POST)

DES: BAW	DR: LMT	APPROVED:	BRIDGE NO.
CHK: BLF	CHK: BLF		27C17

SHEET NO. 42 OF 71 SHEETS

Jan. 18 2016 09:25 am V:\3400_ADC\CAD\SEGMENT E4\PLAN SHEETS\STRUCTURES\27C17\CBR27C17-BRG-RAL-002.dwg By: brad.wodash

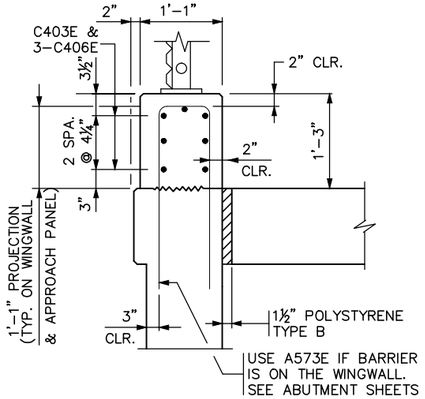

SECTION A–A Ⓐ

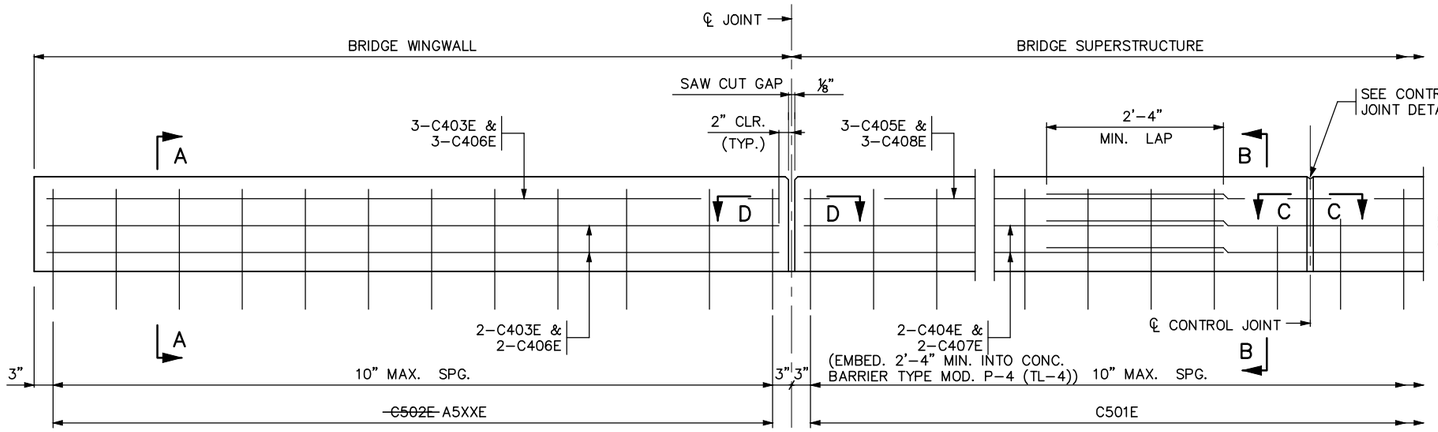

JOINT AT ABUTMENT Ⓐ

INTEGRAL OR SEMI–INTEGRAL ABUTMENT SEE DETAIL "A" FOR PARAPET ABUTMENT

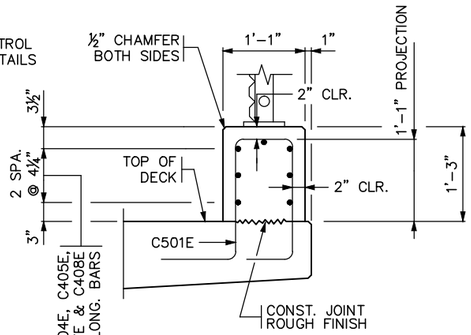

Ⓐ SECTION B–B

CONTROL JOINT

INSIDE ELEVATION OF CONCRETE CURB

CURB DOES NOT MEET CRASH TEST REQUIREMENTS OF NCHRP REPORT 350

BILL OF REINFORCEMENT FOR CURB				
BAR	NO.	LENGTH	SHAPE	LOCATION
Ⓐ C501E	175	5'-8"	BENT	CURB, VERTICAL
~~C502E~~	~~0~~	~~0'-0"~~	~~BENT~~	~~0~~
C403E	14	41'-3"	STR.	CURB, LONGIT.
C404E	8	41'-7"	STR.	CURB, LONGIT.
C405E	6	40'-0"	STR.	CURB, LONGIT.
C406E	7	54'-0"	STR.	CURB, LONGIT.
C407E	8	35'-11"	STR.	CURB, LONGIT.
C408E	6	34'-4"	STR.	CURB, LONGIT.

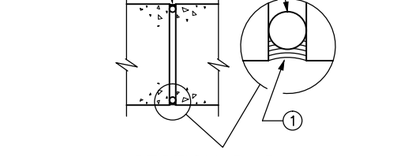

SECTION D–D

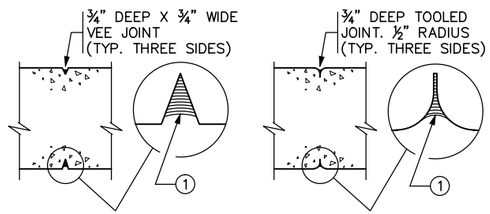

SECTION C–C
CONTRACTOR OPTION 1

SECTION C–C
CONTRACTOR OPTION 2

CONTROL JOINT DETAILS

WHEN USING SLIP FORM METHOD TO PLACE THE CONCRETE, CUT JOINT 3 INCHES DEEP USING MARGIN TROWEL OR SIMILAR MEANS IMMEDIATELY AFTER CONCRETE PLACEMENT (TYP. THREE SIDES)

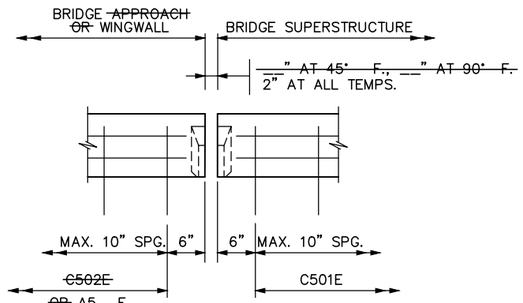

DETAIL "A" ②

(USE ONLY WITH STRIP SEAL EXPANSION DEVICE)
(EXPANSION DEVICE NOT SHOWN)

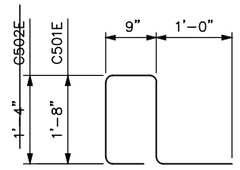

Ⓐ C501E, ~~C502E~~

GENERAL NOTES

CONTINUOUSLY GROUND ALL METAL RAILINGS; SEE THE SPECIAL PROVISIONS. REFER TO THE ELECTRICAL PLANS AND ELECTRICAL SPECIAL PROVISIONS FOR DETAILS REGARDING BONDING MULTIPLE ELECTRICAL GROUNDING SYSTEMS.

LENGTH SHALL BE MEASURED BETWEEN THE OUTSIDE FACES OF THE CONCRETE CURB.

Ⓐ CONCRETE CURB = 204 LBS./FT. (0.050 CU. YDS./FT.)

FINISH ALL EDGES OF CURB WITH ½" CHAMFER, EXCEPT WHERE OTHERWISE NOTED.

MAXIMUM SPACING OF CONTROL JOINTS ON SUPERSTRUCTURE, APPROACH AND WINGWALL SHALL BE 10 FT. SEE SUPERSTRUCTURE SHEET FOR JOINT SPACING.

~~CONCRETE CURB QUANTITIES ARE LISTED IN SUMMARY OF QUANTITIES FOR SUPERSTRUCTURE.~~

① JOINT SEALANT PER MnDOT APPROVED/QUALIFIED PRODUCTS LIST – CRACK AND JOINT MATERIALS – SILICONE JOINT SEALERS.

② REFER TO STANDARD FIGURE 5–397.632 FOR COVER PLATE DETAILS.

REVISION:

APPROVED: NOVEMBER 6, 2013
STATE BRIDGE ENGINEER

SHEET MODIFICATION:
Ⓐ DENOTES MODIFICATION TO STANDARD SHEET

CERTIFIED BY _____ XX\XX\XX
LICENSED PROFESSIONAL ENGINEER — DATE
NAME: ENGINEER LIC. NO. #####

TITLE: CONCRETE CURB ~~FOR USE WITH ORNAMENTAL RAILING~~

DRAFT-WORK IN PROCESS

FIG. 5–397.167 (MOD.)

DES: BAW	DR: LMT	APPROVED:
CHK: BLF	CHK: BLF	

SHEET NO. 43 OF 71 SHEETS

BRIDGE NO. 27C17

Jan. 18 2016 09:25 am V:\3400_ADC\CAD\SEGMENT E4\PLAN SHEETS\STRUCTURES\27C17\CBR27C17-BRG-RAL-002.dwg By: brad.wodash

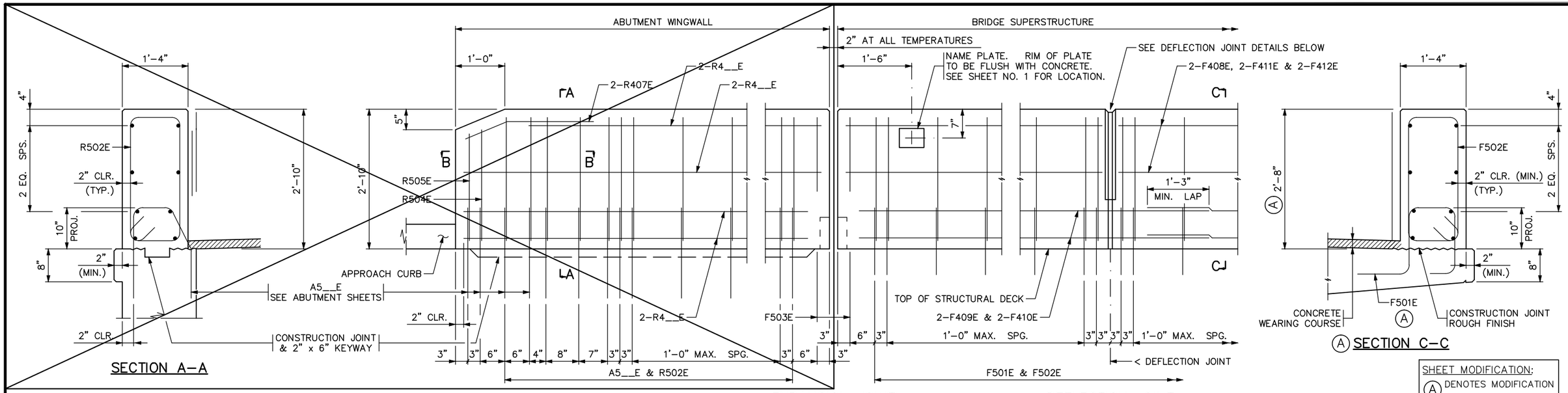

SHEET MODIFICATION:
(A) DENOTES MODIFICATION TO STANDARD SHEET

EXPANSION JOINT

EXPANSION DEVICE NOT SHOWN

DEFLECTION JOINT

(A) INSIDE ELEVATION OF BARRIER

CONCRETE WEARING COURSE NOT SHOWN

BARRIER MEETS TEST LEVEL 4 REQUIREMENTS OF NCHRP REPORT 350

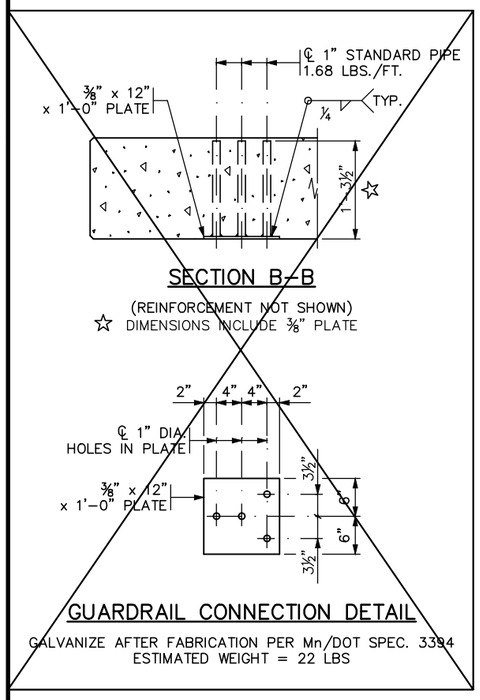

SECTION B-B

(REINFORCEMENT NOT SHOWN)
☆ DIMENSIONS INCLUDE ⅜" PLATE

GUARDRAIL CONNECTION DETAIL

GALVANIZE AFTER FABRICATION PER Mn/DOT SPEC. 3394
ESTIMATED WEIGHT = 22 LBS

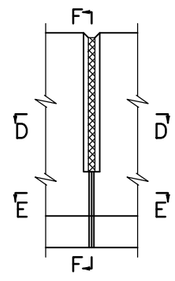

ELEVATION

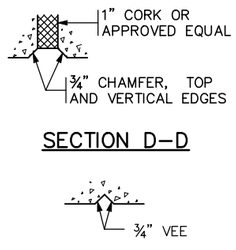

SECTION D-D

SECTION E-E

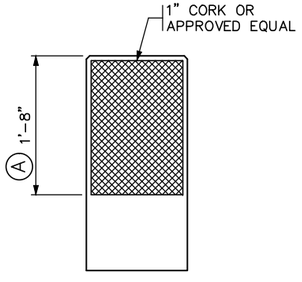

(A) SECTION F-F

(A) DEFLECTION JOINT DETAILS

ESTIMATED QUANTITY OF CORK PER JOINT = 2.15 SQ. FT.

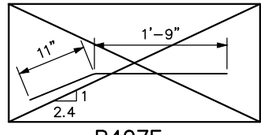

R407E

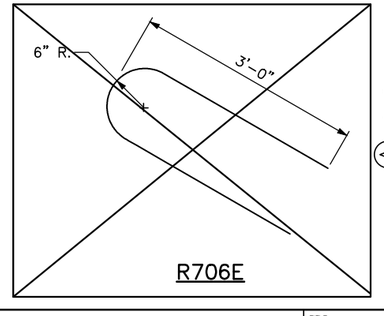

R706E

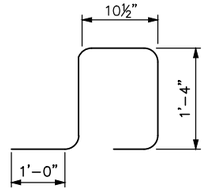

(A) R501E

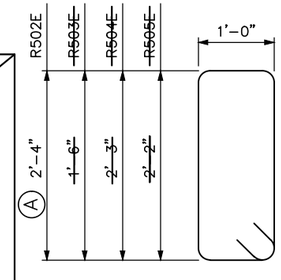

R502E, R503E, R504E & R505E

BILL OF REINFORCEMENT FOR BARRIER

	BAR	NO.	LENGTH	SHAPE	LOCATION
(A)	F501E	41	5'-1"	BENT	BARRIER VERTICAL
(A)	F502E	41	7'-7"	BENT	BARRIER VERTICAL
	~~F503E~~	~~0~~	~~5'-7"~~	~~BENT~~	~~BARRIER VERTICAL~~
	~~F504E~~	~~0~~	~~7'-5"~~	~~BENT~~	~~BARRIER VERTICAL~~
	~~F505E~~	~~0~~	~~7'-3"~~	~~BENT~~	~~BARRIER VERTICAL~~
	~~F706E~~	~~0~~	~~6'-7"~~	~~BENT~~	~~BARRIER END~~
	~~F407E~~	~~0~~	~~2'-8"~~	~~BENT~~	~~BARRIER END LONGIT.~~
	F408E	4	8'-10"	STR.	BARRIER LONGITUDINAL
	F409E	4	8'-7"	STR.	BARRIER LONGITUDINAL
	F410E	4	21'-1"	STR.	BARRIER LONGITUDINAL
	F411E	4	9'-7"	STR.	BARRIER LONGITUDINAL
	F412E	4	11'-0"	STR.	BARRIER LONGITUDINAL

GENERAL NOTES

LENGTH OF "TYPE MOD P-4 RAILING CONCRETE (3S52) SHALL BE MEASURED BETWEEN THE OUTSIDE FACES OF THE CONCRETE BARRIER.

CONCRETE BARRIER = 579 LBS./FT. (0.143 CU. YDS./FT.)

FINISH ALL EDGES OF BARRIER WITH ½" VEE, EXCEPT WHERE OTHERWISE NOTED.

MAXIMUM SPACING OF CONCRETE DEFLECTION JOINTS SHALL BE 20 FT.

SEE SUPERSTRUCTURE SHEET FOR JOINT SPACING.

~~GUARDRAIL CONNECTION TO BE STRUCTURAL STEEL, Mn/DOT SPEC. 3306.~~

~~GALVANIZE STRUCTURAL STEEL PER Mn/DOT SPEC. 3394 AFTER FABRICATION.~~

~~GUARDRAIL CONNECTION, CORK, AND NAME PLATE TO BE CONSIDERED INCIDENTAL TO "TYPE P-4 (TL-4) RAILING CONCRETE (3Y46 OR 3Y46A)".~~

~~BARRIER QUANTITIES ARE LISTED IN SUMMARY OF QUANTITIES FOR SUPERSTRUCTURE.~~

REVISED: 04-17-2013

APPROVED: JULY 25, 2005

STATE BRIDGE ENGINEER

DRAFT-WORK IN PROCESS

FIG. 5-397.173 (MOD)

CERTIFIED BY _____ XX\XX\XX
LICENSED PROFESSIONAL ENGINEER — DATE

NAME: **ENGINEER** LIC. NO. #####

TITLE: CONCRETE BARRIER (TYPE P-4, TL-4) WITH INTEGRAL END POST (WITH CONC. WEARING COURSE)

DES: BAW	DR: LMT	APPROVED:
CHK: BLF	CHK: BLF	

SHEET NO. **44** OF **71** SHEETS

BRIDGE NO. **27C17**

Jan, 18 2016 09:25 am V:\3400_ADC\CAD\SEGMENT E4\PLAN SHEETS\STRUCTURES\27C17\CBR27C17-BRG-RAL-002.dwg By: brad.wodash

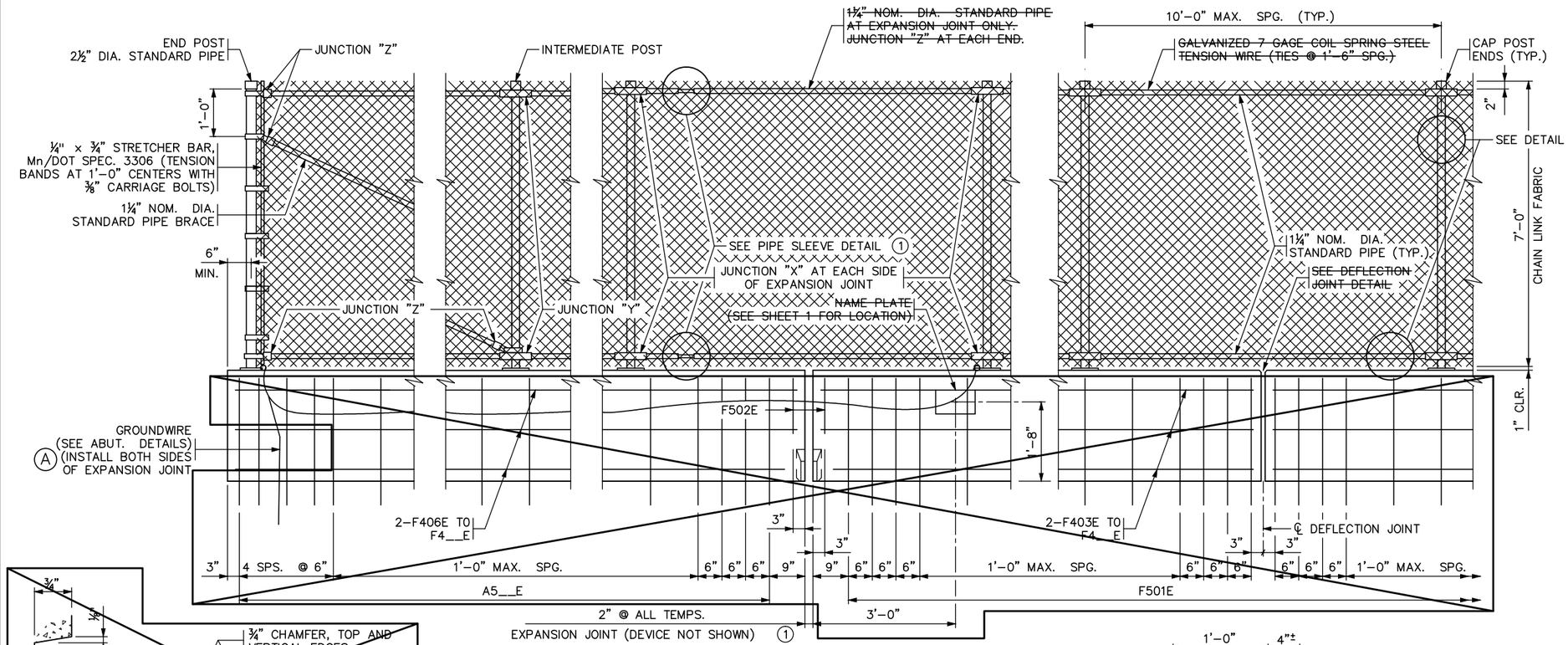

(A) INSIDE ELEVATION OF RAILING

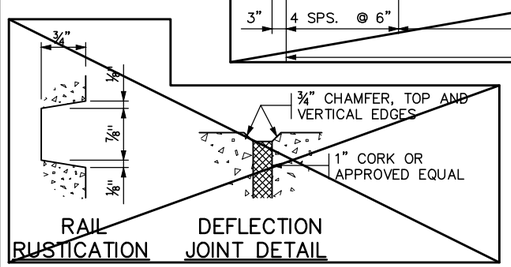

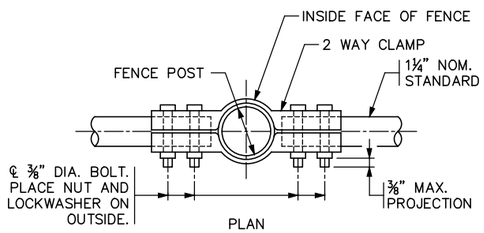

JUNCTION "X"

2 WAY CLAMP BENDING TABLE	
GRADE OF FENCE	Ø
0° TO 2°	0°
2° TO 6°	4°
6° TO 10°	8°

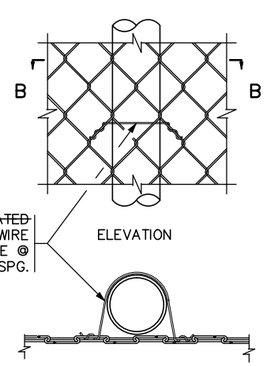

DETAIL "A"

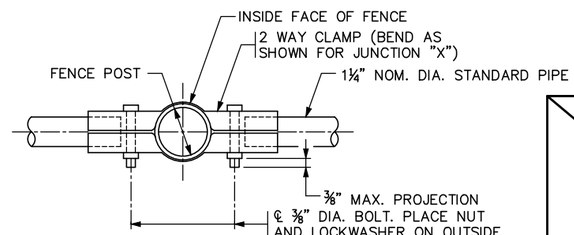

JUNCTION "Y"

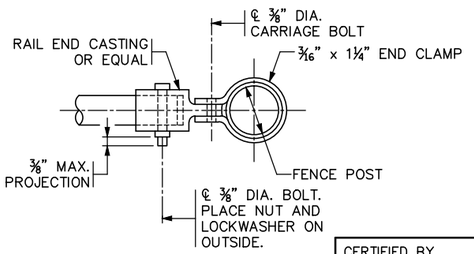

JUNCTION "Z"

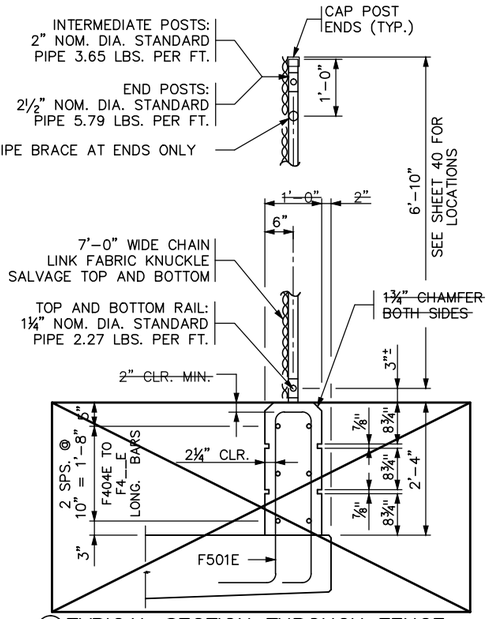

(A) TYPICAL SECTION THROUGH FENCE

INTERMEDIATE POST SHOWN

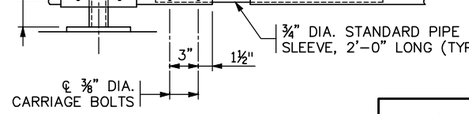

PIPE SLEEVE DETAIL (1)

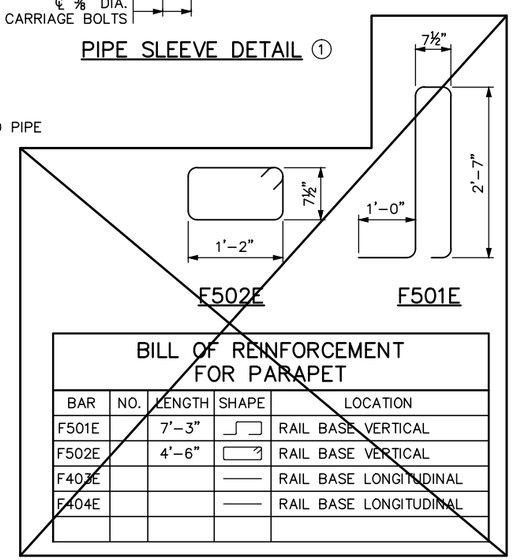

BILL OF REINFORCEMENT FOR PARAPET				
BAR	NO.	LENGTH	SHAPE	LOCATION
F501E		7'-3"		RAIL BASE VERTICAL
F502E		4'-6"		RAIL BASE VERTICAL
F403E				RAIL BASE LONGITUDINAL
F404E				RAIL BASE LONGITUDINAL

SHEET MODIFICATION:
(A) DENOTES MODIFICATION TO STANDARD SHEET

GENERAL NOTES

(A) SEE CONCRETE CURB SHEET FOR DIMENSIONS, REINFORCEMENT AND NOTES.

~~LENGTH OF "TYPE P-1 RAILING CONCRETE (3Y46 OR 3Y46A)" FOR PAYMENT SHALL BE MEASURED BETWEEN THE OUTSIDE FACES OF THE CONCRETE RAIL.~~

(A) LENGTH OF "WIRE FENCE DESIGN W-1" ~~FOR PAYMENT~~ SHALL BE MEASURED BETWEEN THE CENTERS OF END RAILPOSTS. SEE SHEET 40.

~~CONCRETE RAILING = 350 LBS./FT. (0.086 CU. YDS./FT.)~~

FENCE POST ANCHORAGES SHALL BE TYPE A. SEE DETAIL B905 "FENCE POST ANCHORAGE".

~~MAXIMUM SPACING OF DEFLECTION JOINTS SHALL BE 20 FT. FOR SPACING OF FENCE POST, JOINTS AND ELECTRICAL GROUNDS, SEE SUPERSTRUCTURE SHEETS.~~

FENCE POSTS AND FENCE POST ANCHORAGES SHALL BE SET VERTICAL, UNLESS OTHERWISE NOTED.

℄ OF FENCE POST ANCHORAGE SHALL BE A MINIMUM OF 6" FROM JOINTS.

END POSTS AND BRACING SHALL BE AT 500 FT. MAXIMUM INTERVALS.

~~ALL POSTS SHALL HAVE A MEANS TO SECURELY HOLD THE TOP TENSION WIRE IN POSITION AND ALLOW FOR THE REMOVAL AND REPLACEMENT OF A POST WITHOUT DAMAGING THE TOP WIRE.~~

WIRE TIES MAY BE 9 GAGE GALVANIZED STEEL OR 0.179" MIN. ALUMINUM ALLOY CONFORMING TO A.S.T.M. B211, ALLOY 1100-H18. ~~USE 12½ GAGE GALVANIZED HOG RINGS FOR TENSION WIRE TIES.~~

~~ALL MATERIAL IN THE CONCRETE BASE AND END POST IS INCLUDED IN THE SUPERSTRUCTURE QUANTITIES.~~

SEE SPECIAL PROVISIONS FOR REQUIREMENTS NOT INCLUDED ON THIS SHEET. ~~AND FOR BASIS OF PAYMENT.~~

(1) PROVIDE PIPE SLEEVE IN SPAN BETWEEN THE VERTICAL POSTS AT EXPANSION JOINT. SEE SUPERSTRUCTURE SHEETS FOR LOCATION.

REVISED: 04-17-2013

APPROVED: DECEMBER 18, 2003

STATE BRIDGE ENGINEER

CERTIFIED BY _____ LICENSED PROFESSIONAL ENGINEER ---- DATE

NAME: ENGINEER LIC. NO. #####

TITLE: WIRE FENCE (DESIGN W-1) (A)

FIG. 5-397.119 (MOD.)

DES: BAW	DR: LMT	APPROVED:	BRIDGE NO.
CHK: BLF	CHK: BLF		27C17

SHEET NO. 45 OF 71 SHEETS

Jan. 18 2016 09:25 am V:\3400_ADC\CAD\SEGMENT E4\PLAN SHEETS\STRUCTURES\27C17\CBR27C17-BRG-RAL-002.dwg By: brad.wodash

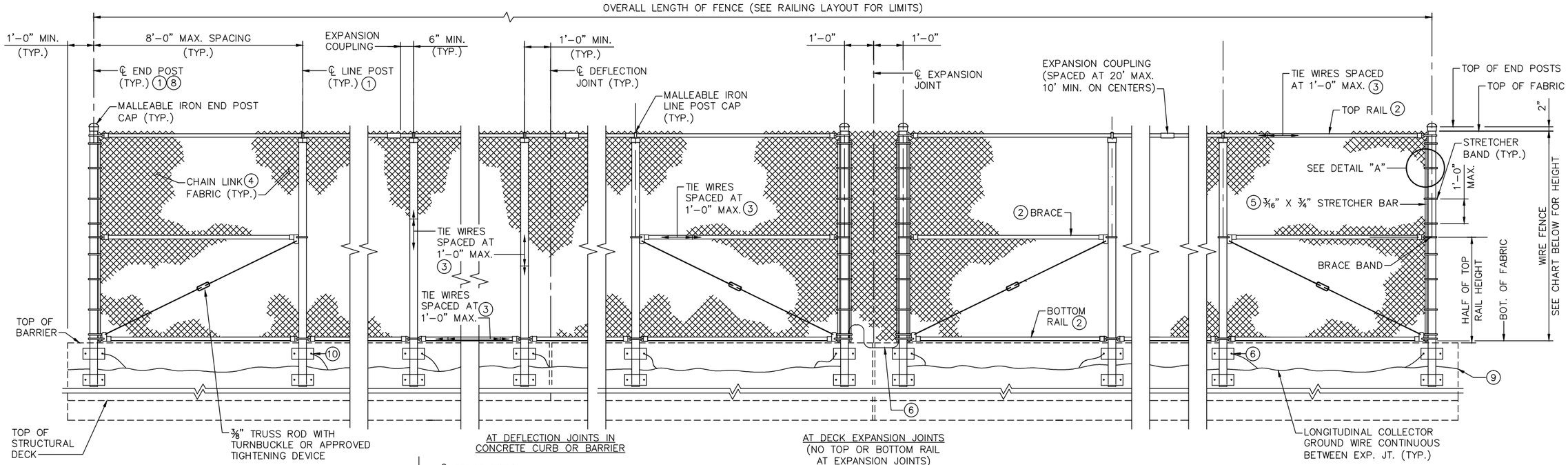

OUTSIDE ELEVATION OF WIRE FENCE

SPAN	WIRE FENCE HEIGHT
1	6'-0"

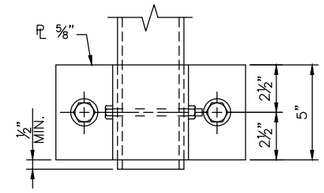

ELEVATION

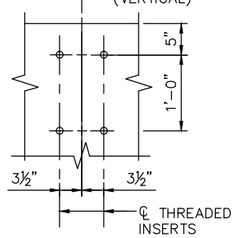

BOLT SETTING DETAIL

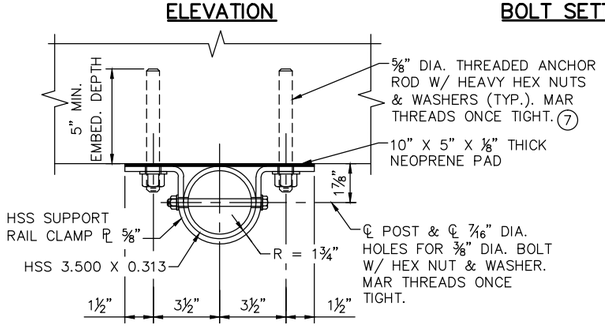

HSS CLAMP CONNECTION DETAIL

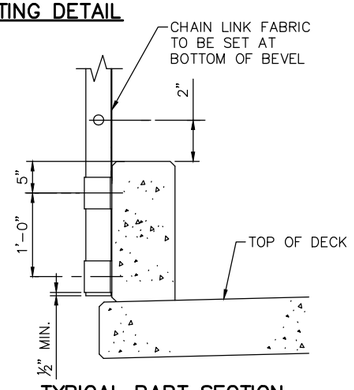

TYPICAL PART SECTION

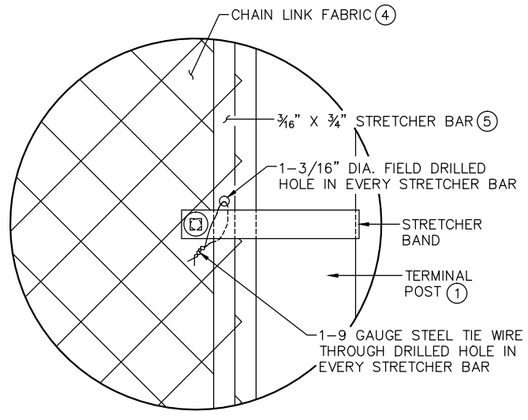

DETAIL "A"

NOTES:

1. GALVANIZED HSS 3.500 X 0.313 PER MNDOT SPEC. 3306.
2. GALVANIZED HSS 1.660 X 0.140 PER MNDOT SPEC. 3306.
3. 9 GAUGE GALVANIZED STEEL TIE WIRES ATTACH CHAIN LINK FABRIC TO HSS.
4. 9 GAUGE GALVANIZED STEEL CHAIN LINK FABRIC, 2" MESH, KNUCKLE SELVAGE TOP AND BOTTOM.
5. CONTRACTOR MUST FIELD DRILL ONE 3/16" DIA. HOLE IN EVERY STRETCHER BAR AND USE A 9 GALVANIZED GAUGE STEEL TIE WIRE TO TIE ON STRETCHER BAND AND CHAIN LINK FABRIC TOGETHER. LOCATE DRILLED HOLE FOR TIE WIRE AT APPROXIMATE MID-HEIGHT OF FENCE.
6. AT ALL SLAB EXPANSION JOINTS, BOND THE POSTS TOGETHER. ATTACH 6 AWG COPPER STRANDED WIRE TO STEEL POSTS WITH UL LISTED HARDWARE AS SHOWN WITH 6" EXCESS OF WIRE TO ALLOW FOR EXPANSION.
7. 5/8" DIA THREADED ANCHOR RODS MUST BE ASTM-A36. EMBED THREADED RODS INTO PARAPET WALL WITH AN APPROVED EPOXY ANCHORAGE SYSTEM. MINIMUM EMBEDMENT DEPTH IS 5". ANCHORAGE SYSTEM CHOSEN MUST BE ABLE TO ACHIEVE AN ULTIMATE TENSILE RESISTANCE OF 3.5 KIPS PER BOLT. THE CONTRACTOR MUST PROVIDE EVIDENCE THAT THIS CAN BE ACHIEVED. EVIDENCE OF ADEQUATE TENSILE RESISTANCE CAN BE BASED ON THE MANUFACTURER'S PUBLISHED VALUES OF ULTIMATE TENSILE STRENGTH (ANCHOR SPACING AND EDGE DISTANCE MUST BE ACCOUNTED FOR). ANCHOR INSTALLATION, INCLUDING HOLE SIZE, DRILLING, AND CLEAN-OUT, MUST BE IN ACCORDANCE WITH THE MANUFACTURER'S INSTRUCTIONS.
8. END POSTS AND BRACING SHALL BE AT 500 FT. MAXIMUM INTERVALS
9. CONTINUE GROUND WIRE TO WIRE FENCE (DESIGN W-1) CONECTION.
10. GROUND WIRE PIGTAIL PLACED WITHIN 6" OF EACH FENCE POST ANCHORAGE. CONTRACTOR SHALL COORDINATE LOCATIONS WITH FENCE SUB CONTRACTOR.
11. GROUND WIRE PIGTAIL CONNECTION TO ABUTMENT EXPANSION JOINT DEVICE AND ABUTMENT EXPANSION JOINT COVER PLATES (NOT SHOWN).

NO.	DATE	BY	CHECK	DESIGN	REVISION / SUBMITTAL

DESIGNED BY: BAW | CHECKED BY: BLF
DRAWN BY: LMT | CHECKED BY: BLF

AECOM Kimley»Horn

90% SUBMISSION - 01/22/16

METROPOLITAN COUNCIL

SOUTHWEST Green Line LRT Extension

CIVIL - VOLUME 4G
CSAH 40 (GLENWOOD AVENUE) - EAST
BRIDGE 27C17
WIRE FENCE SPECIAL DESIGN

DISCIPLINE: STRUCTURES
SHEET NAME: CBR27C17-BRG-RAL-003

SHEET 46 OF 71

Jan, 18 2016 09:25 am V:\3400_ADC\CAD\SEGMENT E4\PLAN SHEETS\STRUCTURES\27C17\CBR27C17-BRG-RAL-003.dwg By: brad.wodash

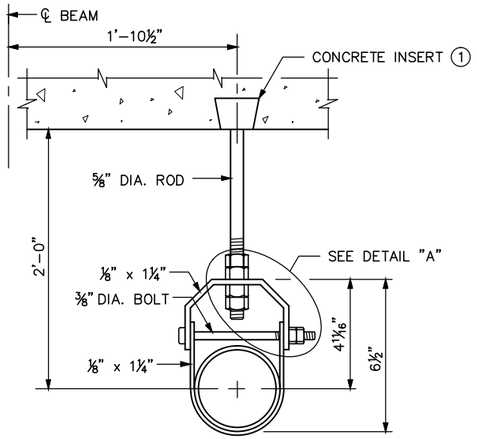

CONDUIT HANGER DETAIL

(FOR SYSTEM WIDE ELECTRICAL CONDUIT SYSTEM AND CONDUIT SYSTEM LIGHTING)

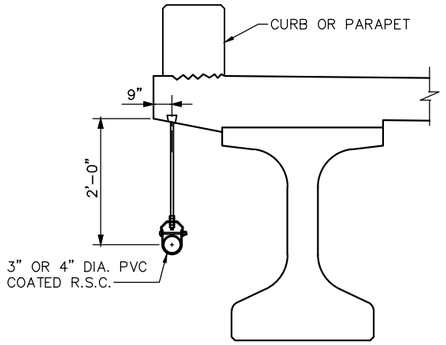

OVERHANG CONDUIT DETIAL

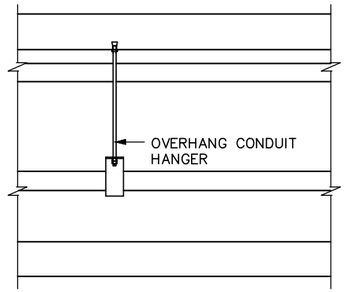

LONGITUDINAL SECTION

(FOR SYSTEMWIDE ELECTRICAL CONDUIT SYSTEM AND CONDUIT SYSTEM LIGHTING)

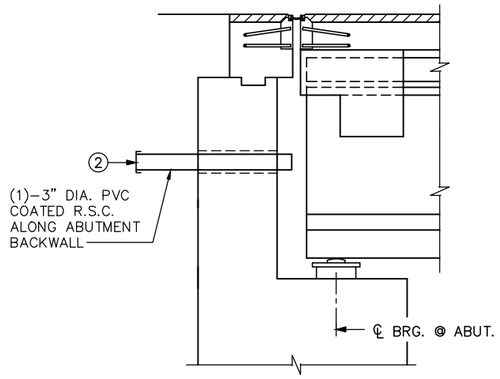

LONGITUDINAL SECTION

(FOR CONDUIT SYSTEM LIGHTING)

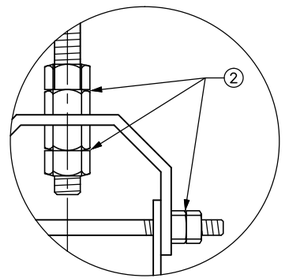

DETAIL "A"

GENERAL PLAN

NOTES:

RODS SHALL COMPLY WITH MnDOT SPEC. 3313, TYPE I.

FLAT BARS AND ANCHORAGES SHALL COMPLY WITH SPEC. 3306.

CONCRETE INSERTS SHALL BE APPROVED TYPE MALLEABLE IRON. MATERIAL AS PER SPEC. 3324, GRADE 35018. TAP AFTER GALVANIZING.

GALVANIZE BOLTS, NUTS, WASHERS, RODS AND INSERTS AS PER SPEC. 3392. GALVANIZE OTHER MATERIAL AS PER SPEC. 3394 AFTER FABRICATION.

PAINT ALL CONDUIT AND SUPPORTS TO MATCH ADJACENT BRIDGE STRUCTURES.

① SPACE INSERTS AT 10'–0" MAXIMUM CENTERS.

② DOUBLE NUTS OR JAM NUTS OR LOCK NUT.

NO.	DATE	BY	CHECK	DESIGN	REVISION / SUBMITTAL

DESIGNED BY: BAW CHECKED BY: BLF
DRAWN BY: LMT CHECKED BY: BLF

AECOM Kimley»Horn

90% SUBMISSION - 01/22/16

METROPOLITAN COUNCIL

SOUTHWEST Green Line LRT Extension

CIVIL - VOLUME 4G
CSAH 40 (GLENWOOD AVENUE) - EAST
BRIDGE 27C17
CONDUIT SYSTEM

DISCIPLINE: STRUCTURES
SHEET NAME: CBR27C17-BRG-SYS-001

SHEET 47 OF 71

Jan, 18 2016 09:25 am V:\3400_ADC\CAD\SEGMENT E4\PLAN SHEETS\STRUCTURES\27C17\CBR27C17-BRG-SYS-001.dwg By: brad.wodash

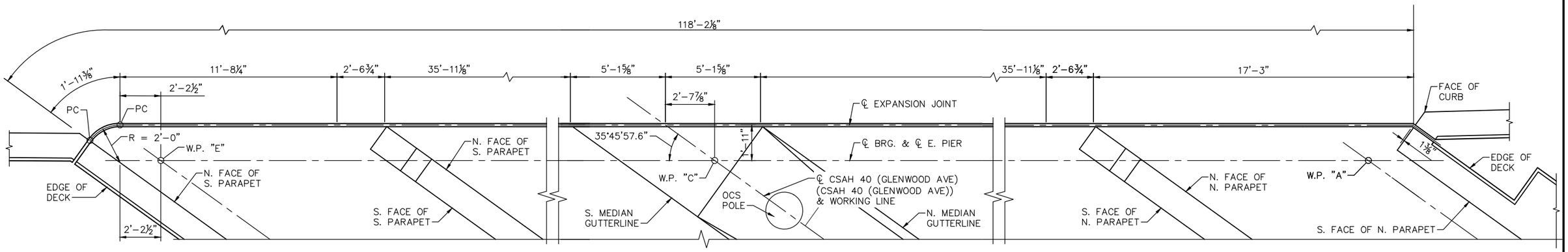

PLAN
EXPANSION JOINT AT EAST PIER

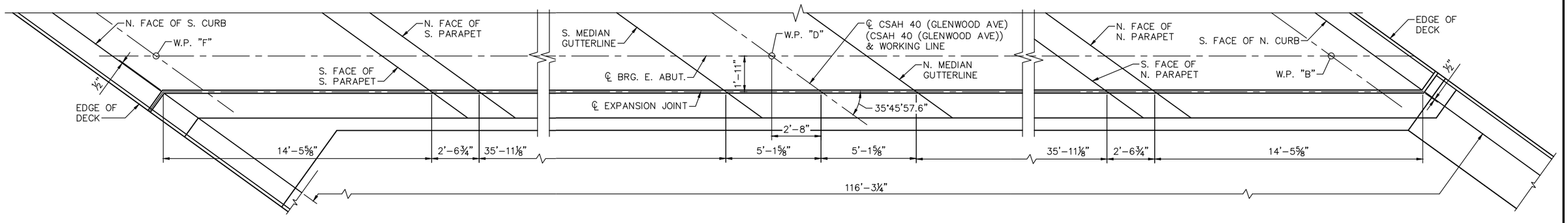

PLAN
EXPANSION JOINT AT EAST ABUTMENT

NOTES:

ALL DIMENSIONS ALONG ℄ OF EXPANSION JOINT.

NO.	DATE	BY	CHECK	DESIGN	REVISION / SUBMITTAL

DESIGNED BY: BAW | CHECKED BY: BLF
DRAWN BY: LMT | CHECKED BY: BLF

AECOM Kimley»Horn

90% SUBMISSION - 01/22/16

METROPOLITAN COUNCIL

SOUTHWEST Green Line LRT Extension

CIVIL - VOLUME 4G
CSAH 40 (GLENWOOD AVENUE) - EAST
BRIDGE 27C17
WATERPROOF EXPANSION DEVICE 1

DISCIPLINE: STRUCTURES
SHEET NAME: CBR27C17-BRG-EXP-001

SHEET 48 OF 71

Jan, 18 2016 09:26 am V:\3400_ADC\CAD\SEGMENT E4\PLAN SHEETS\STRUCTURES\27C17\CBR27C17-BRG-EXP-001.dwg By: brad.wodash

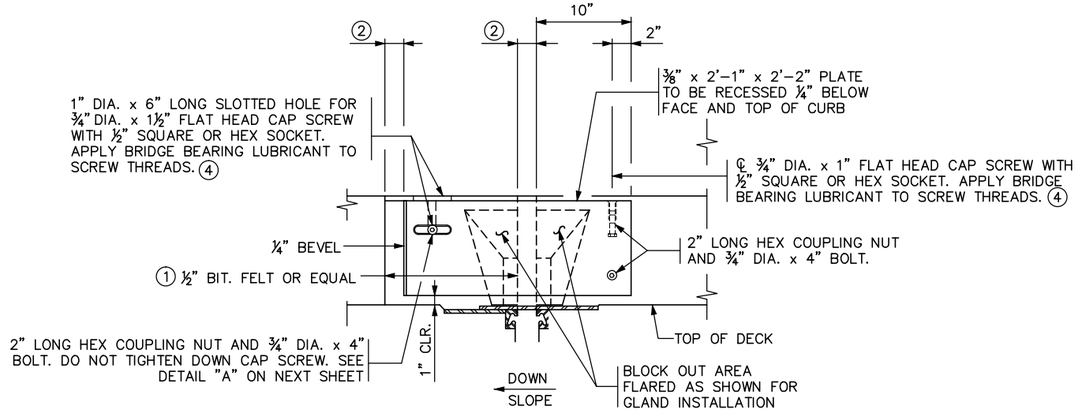

(A) INSIDE ELEVATION OF CONCRETE CURB

(ELEVATION @ SIDEWALK SHOWN)

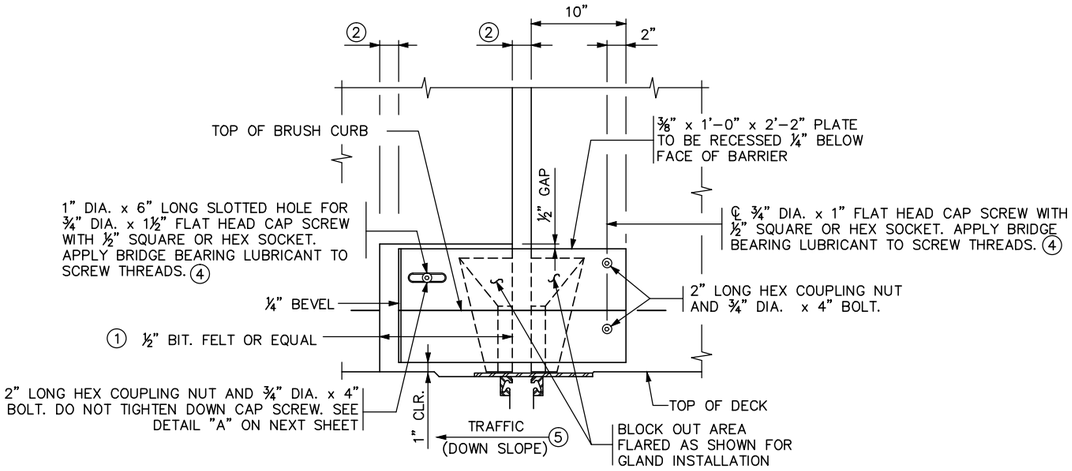

(A) OUTSIDE ELEVATION OF P-2 PARAPET

(BACK OF TYPE P-2 PARAPET, VEHICLE FACE SIMILAR, ELEVATION @ SIDEWALK SHOWN)

NOTE:
TRANSVERSE DECK REINFORCEMENT MAY BE SHIFTED THE MINIMUM DISTANCE REQUIRED FOR EXPANSION DEVICE PLACEMENT

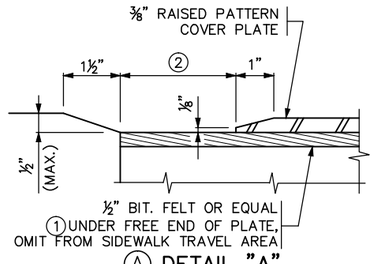

(A) DETAIL "A"

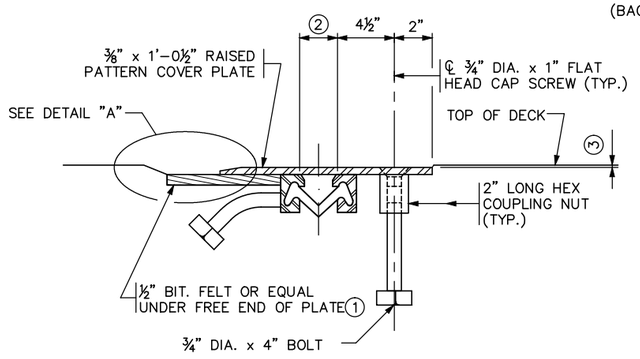

SECTION D-D

GENERAL NOTES

(A) COVER PLATES AT EAST PIER SHALL BE FIBERGLASS

(A) SEE NEXT SHEET FOR ADDITIONAL DETAILS AND NOTES.

3/4" DIA. X 1" FLAT HEAD CAP SCREW WITH 1/2" SQUARE OR HEX SOCKET PER SPEC 3391. CAP SCREWS SHALL BE COUNTERSUNK 1/16" BELOW TOP OF PLATE. APPLY BRIDGE BEARING LUBRICANT TO SCREW THREADS. (4)

(1) USE LARGEST SINGLE PIECE POSSIBLE. USE OF SMALL PIECES OR SCRAPS SECURED TOGETHER IS PROHIBITED.

(A) (2) 2" @ 90° F, 2" @ 45° F @ EAST ABUTMENT.
2" @ 90° F, 2 3/16" @ 45° F @ EAST PIER.

(3) 1/8" (1/4" MAX.).

(4) LUBRICANT PER MnDOT APPROVED/QUALIFIED PRODUCTS LIST: BRIDGE - BRIDGE BEARING LUBRICANT.

(A) (5) DOWN SLOPE DIRECTION APPLIES TO 3/8" x 1'-0 1/2" RAISED COVER PLATE

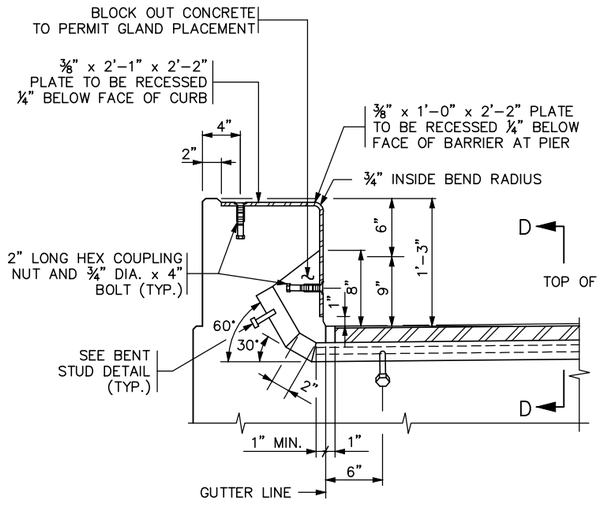

CONCRETE CURB

(TYPE P-4 BARRIER SIMILAR)

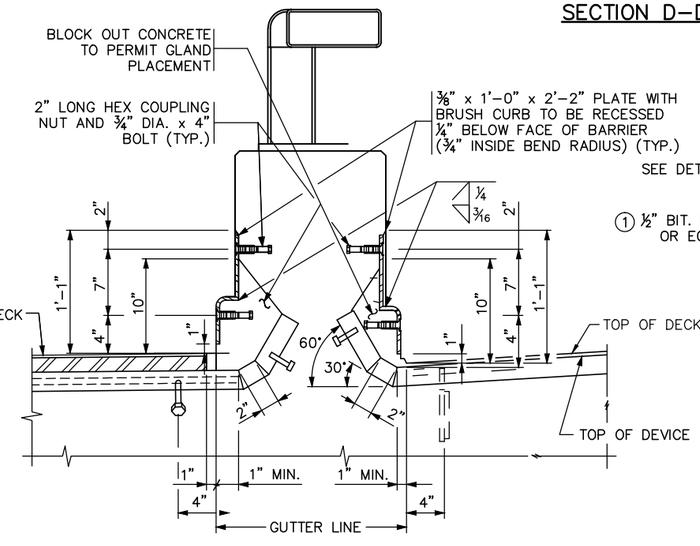

TYPE P-2 PARAPET

SECTION THROUGH PARAPET AND CURB - INTEGRAL SIDEWALK (A)

(BENT STUDS MAY BE USED ON EAST ABUTMENT EXPANSION JOINT IN SIDEWALK AREA.)
(ALL OTHER LOCATIONS SHALL BE BAR-RODS.)

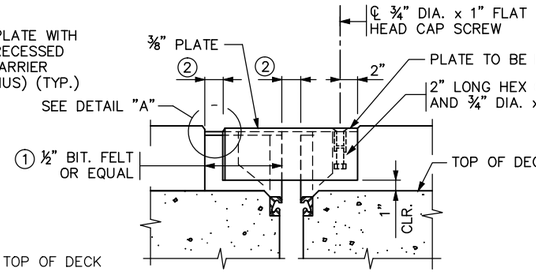

MEDIAN ELEVATION

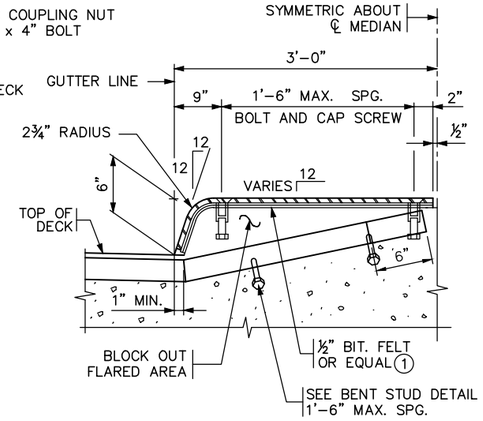

(A) MEDIAN SECTION

SHEET MODIFICATION:
(A) DENOTES MODIFICATION TO STANDARD SHEET

FIG. 5-397.632 (MOD.)

REVISION:

APPROVED: NOVEMBER 6, 2013
Nancy Daubenberger
STATE BRIDGE ENGINEER

CERTIFIED BY _____ 01/22/16
LICENSED PROFESSIONAL ENGINEER — DATE
NAME: ENGINEER LIC. NO. #####

TITLE: WATERPROOF EXPANSION DEVICE
(RAISED MEDIAN OR INTEGRAL SIDEWALK WITH CURB)

DES: BAW	DR: LMT
CHK: BLF	CHK: BLF

APPROVED:

SHEET NO. 49 OF 71 SHEETS

BRIDGE NO. 27C17

Jan. 18 2016 09:26 am V:\3400_ADC\CAD\SEGMENT E4\PLAN SHEETS\STRUCTURES\27C17\CBR27C17-BRG-EXP-002.dwg By: brad.wodash

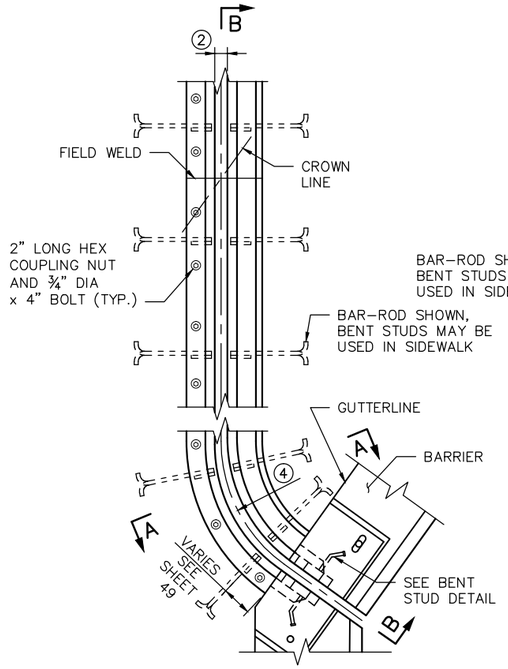

PLAN VIEW @ EXPANSION DEVICE

(EAST PIER, SOUTH END SHOWN NORTH END SIMILAR)

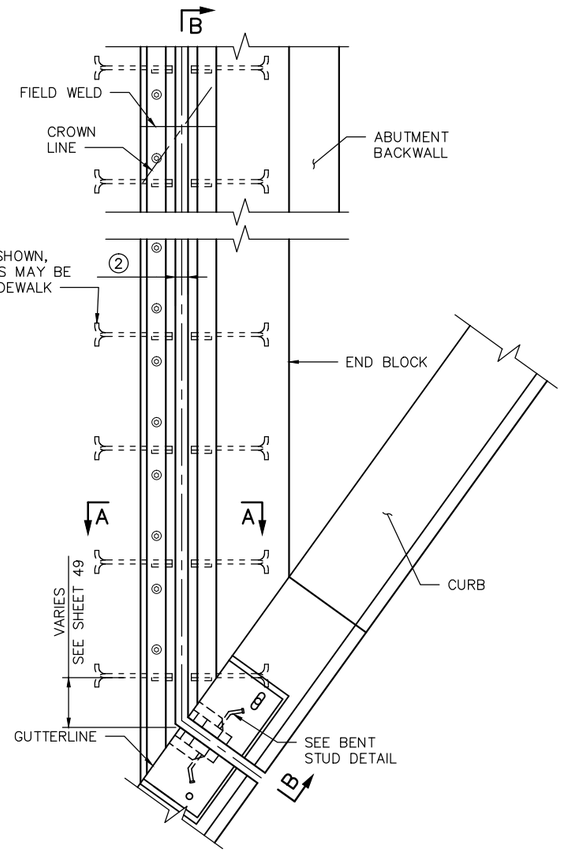

PLAN VIEW @ EXPANSION DEVICE

(EAST ABUTMENT, SOUTH END SHOWN NORTH END SIMILAR)

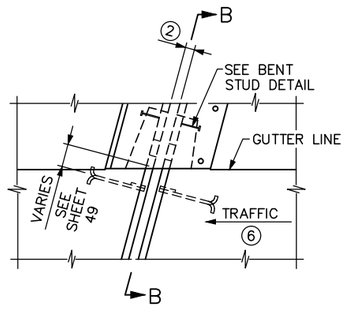

PLAN VIEW @ EXPANSION DEVICE

(MEDIAN OR SIDEWALK ALTERNATE)

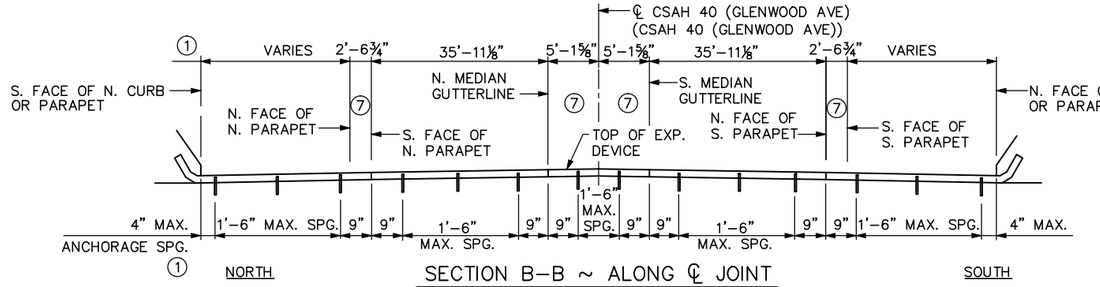

SECTION B–B ~ ALONG ℄ JOINT

⑧ (ELEVATIONS SHOWN ARE ⅛" BELOW TOP OF SLAB @ ℄ JOINT
ELEVATIONS SHOWN ARE ½" BELOW TOP OF SLAB @ ℄ JOINT WITH COVER PLATE)

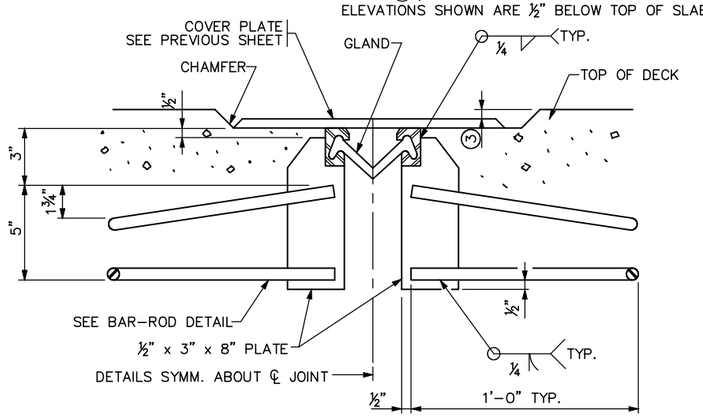

SECTION A–A

(SECTION @ SIDEWALK SHOWN W/COVER PLATE. OMIT COVER PLATE IN ROADWAY)

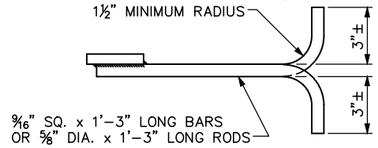

BAR–ROD DETAIL ⑤

(SEE SECTION D–D ON PREVIOUS SHEET FOR COVER PLATE SCREW DETAIL)

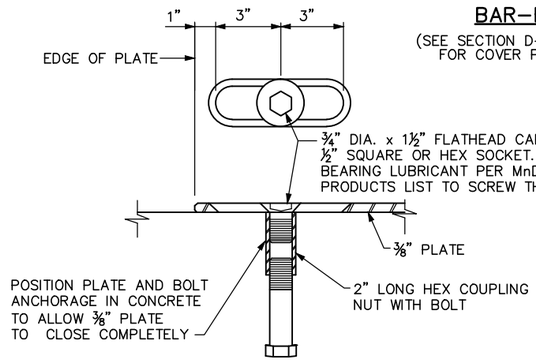

DETAIL "A"

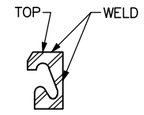

SECTION C–C

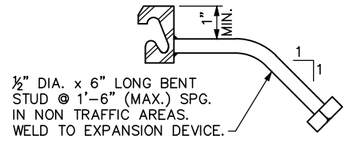

BENT STUD DETAIL

⑧ ELEVATIONS

LOCATION	EAST PIER	EAST ABUT.
S. FACE OF N. CURB	851.49	848.84
N. FACE OF N. PARAPET	851.41	849.18
S. FACE OF N. PARAPET	851.43	849.25
N. MEDIAN GUTTERLINE	851.25	850.15
CL CSAH 40 (GLENWOOD AVE)	851.22	
S. MEDIAN GUTTERLINE	851.19	850.19
N. FACE OF S. PARAPET	850.99	850.34
S. FACE OF S. PARAPET	850.94	850.38
N. FACE OF S. CURB	850.86	850.68

NOTES:

GALVANIZE STRUCTURAL STEEL AFTER FABRICATION AS PER MnDOT SPEC. 3394. GALVANIZE FASTENERS AS PER MnDOT SPEC. 3392.

JOINTS IN EXTRUSION SHALL BE LOCATED AT BREAKS IN TRANSVERSE PROFILE AND AS OTHERWISE REQUIRED. JOINTS SHALL BE CLOSE FIT AND WELDED. REPAIR AFTER WELDING AS PER MnDOT SPEC. 2471.3.L.

STRUCTURAL STEEL SHALL COMPLY WITH MnDOT SPEC. 3306 OR MnDOT SPEC. 3309.

EXPANSION DEVICE SHALL BE STRAIGHTENED TO A TOLERANCE OF ⅛" IN 10 FT.

¾" DIA. X 1½" FLATHEAD CAP SCREW WITH ½" SQUARE OR HEX SOCKET PER MnDOT SPEC 3391. CAP SCREWS SHALL BE COUNTERSUNK 1⁄16" BELOW TOP OF PLATE. APPLY BRIDGE BEARING LUBRICANT PER MnDOT APPROVED PRODUCTS LIST TO SCREW THREADS.

LENGTH OF PAYMENT FOR DEVICE IS FROM OUT TO OUT OF EXTRUSION ALONG CENTERLINE OF JOINT.

① DIMENSIONS ARE ALONG CENTERLINE OF JOINT. SEE SHEET 48 FOR ADDITIONAL DIMENSIONS.

② 2" @ 90° F, 2" @ 45° F @ EAST ABUTMENT.
2" @ 90° F, 2 3⁄16" @ 45° F @ EAST PIER.

③ ⅛" (¼" MAX.).

④ SEE SHEET 48 FOR RADIUS.

⑤ PLACE BAR–ROD NORMAL TO JOINT.

⑥ SEE SHEET 1 FOR DIRECTION OF TRAFFIC.

⑦ EAST ABUTMENT, EXTRUSION NON–CONTINUOUS AND ANGLED UP, SEE DETAILS ON PREVIOUS SHEET.

NO.	DATE	BY	CHECK	DESIGN	REVISION / SUBMITTAL

DESIGNED BY: BAW CHECKED BY: BLF
DRAWN BY: LMT CHECKED BY: BLF

AECOM Kimley»Horn

90% SUBMISSION - 01/22/16

METROPOLITAN COUNCIL

SOUTHWEST Green Line LRT Extension

CIVIL - VOLUME 4G
CSAH 40 (GLENWOOD AVENUE) - EAST BRIDGE 27C17
WATERPROOF EXPANSION DEVICE 3

DISCIPLINE: STRUCTURES
SHEET NAME: CBR27C17-BRG-EXP-002-2

SHEET 50 OF 71

Jan, 18 2016 09:26 am V:\3400_ADC\CAD\SEGMENT E4\PLAN SHEETS\STRUCTURES\27C17\CBR27C17-BRG-EXP-002.dwg By: brad.wodash

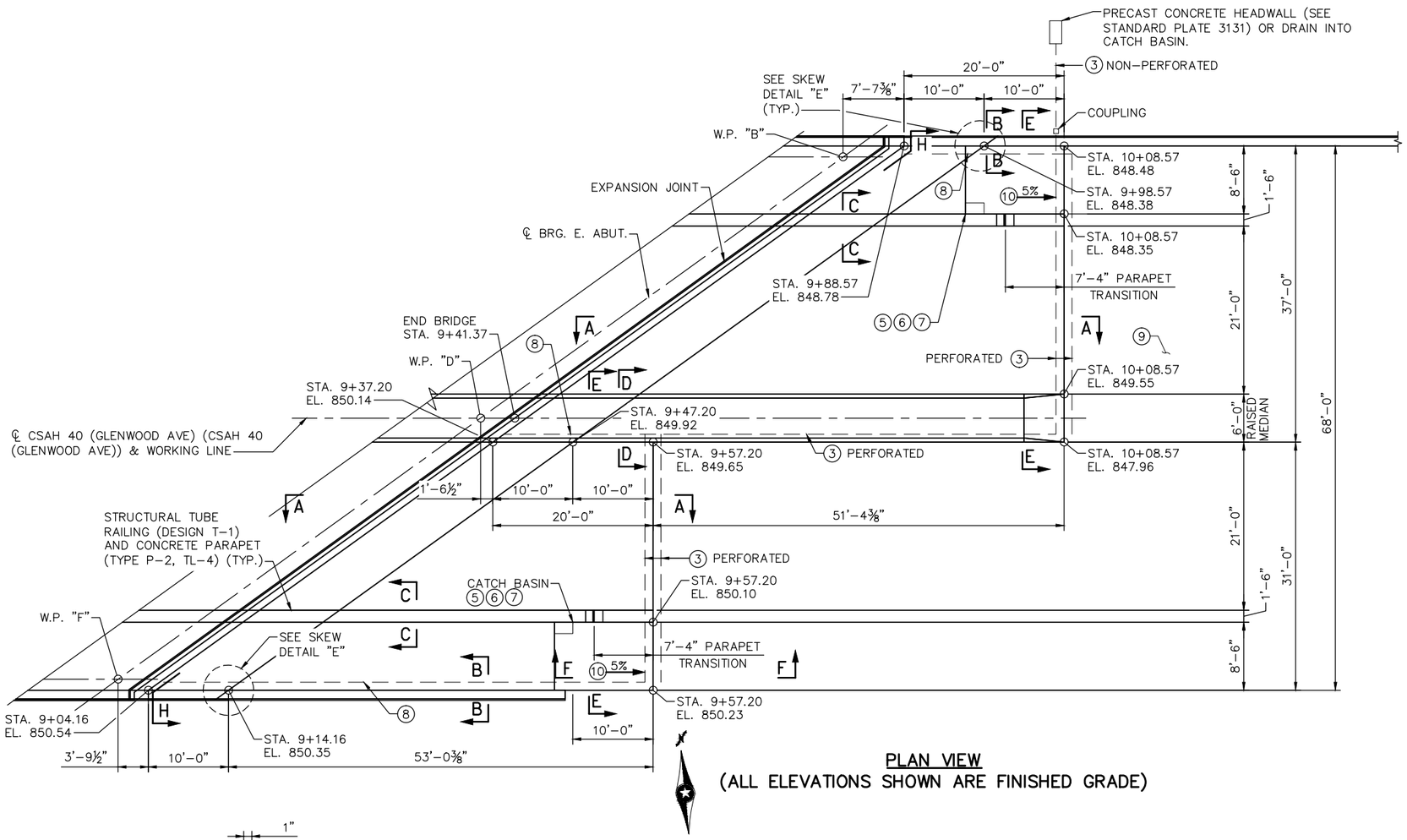

PLAN VIEW
(ALL ELEVATIONS SHOWN ARE FINISHED GRADE)

NOTES:

CONCRETE MIX SHALL BE 3S52 FOR APPROACH PANEL.

REFER TO MNDOT SPEC. 2406 FOR ADDITIONAL INFORMATION

SEE SHEET 52 FOR SECTIONS A–A AND F–F. SEE SHEETS 51 FOR SECTIONS E–E AND H–H.

1. HOT POUR SEALANT, BACKER ROD, POLYSTYRENE SHALL BE LOCATED BETWEEN WALLS AND APPROACH PANELS.
2. HOT POUR SEALANT SPEC. 3725. TOP OF SEALER FLUSH TO ⅛" BELOW TOP OF PAVEMENT SURFACE.
3. 4" NOMINAL DIAMETER THERMOPLASTIC PIPE, AS PER ASTM D1785M, SCHEDULE 40. SLOPE PIPE TO DITCH. WRAP PERFORATED PIPE WITH GEOTEXTILE AS PER SPEC. 3733. 1/8 INCH PER 12 INCH MINIMUM SLOPE.
4. BACKFILL WITH FINE AGGREGATE (MNDOT 3149) MODIFIED TO 0–3% PASSING A NO. 200 SIEVE.
5. SEE DRAINAGE PLAN FOR ADDITIONAL CATCH BASIN DETAILS.
6. LOCATE BETWEEN GUARDRAIL POST OR AS DETERMINED BY THE DESIGNER.
7. REFER TO THE DRAINAGE PLAN TO DETERMINE WHETHER A FLUME OR A CATCH BASIN REQUIRED.
8. 2" NOMINAL DIAMETER PERFORATED THERMOPLASTIC PIPE, AS PER ASTM D1785M, SCHEDULE 40. SLOPE PIPE TO DITCH. WRAP PERFORATED PIPE WITH GEOTEXTILE AS PER SPEC. 3733. 1/8 INCH PER 12 INCH MINIMUM SLOPE.
9. SEE CIVIL PLANS FOR PAVEMENT AND SHOULDER WIDTHS AND CONFIGURATION.
10. SLOPE UP RELATIVE TO PROFILE GRADE
11. THE JOINT SHALL BE PERPENDICULAR TO THE EDGE OF APPROACH PANEL FOR 1 FT. (TYP.).

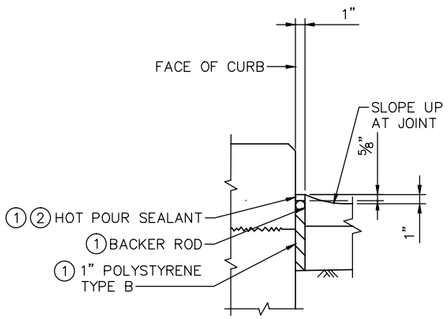

SECTION B–B

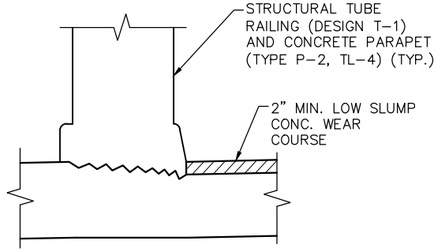

SECTION C–C

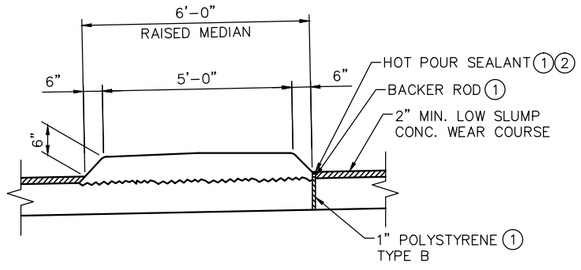

SECTION D–D

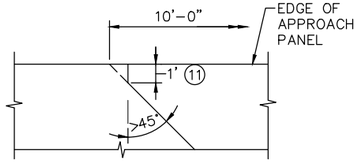

SKEW DETAIL "E"
(PLAN VIEW)

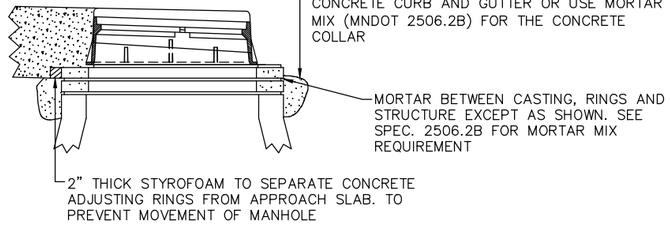

SECTION G–G

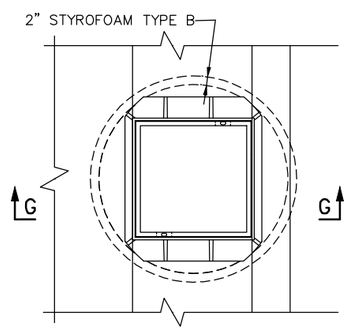

PLAN VIEW OF C.B. CASTING
(GRATE NOT SHOWN)

NO.	DATE	BY	CHECK	DESIGN	REVISION / SUBMITTAL

DESIGNED BY: KAE | CHECKED BY: JBW
DRAWN BY: LMT | CHECKED BY: BLF

AECOM Kimley»Horn

90% SUBMISSION - 01/22/16

METROPOLITAN COUNCIL

SOUTHWEST

CIVIL - VOLUME 4G
CSAH 40 (GLENWOOD AVENUE) - EAST
BRIDGE 27C17
APPROACH PANEL DETAILS 1

DISCIPLINE: STRUCTURES
SHEET NAME: CBR27C17-BRG-DTL-003-1

SHEET 51 OF 71

Jan, 18 2016 09:26 am V:\3400_ADC\CAD\SEGMENT E4\PLAN SHEETS\STRUCTURES\27C17\CBR27C17-BRG-DTL-003.dwg By: brad.woodash

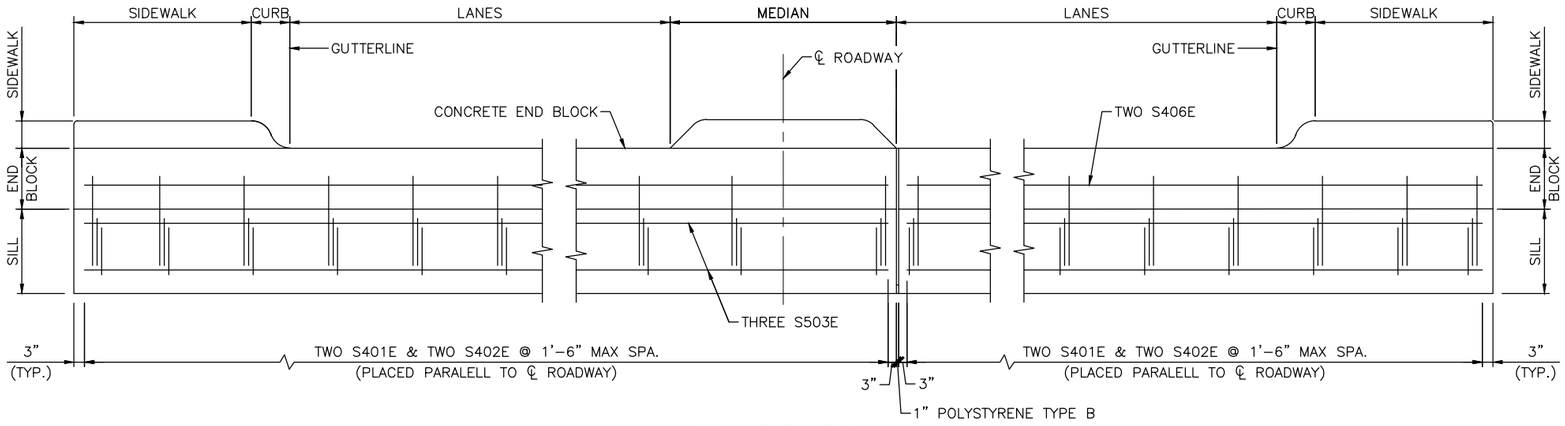

SILL ELEVATION
(LOOKING UPSTATION)

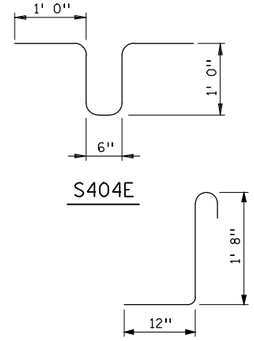

BILL OF REINFORCEMENT FOR CONCRETE SILL

CONTRACTOR IS REQUIRED TO COMPLETE THE BILL OF REINFORCEMENT TABLE AND PREPARE SHOP DRAWINGS AND SUBMIT THEM TO THE PROJECT ENGINEER AT LEAST 3 WEEKS BEFORE REBAR FABRICATION.

	BAR	NO.	LENGTH	SHAPE	LOCATION
	S401E	--	3'-2"		SILL VERTICAL
	S402E	--	5'-6"		SILL TIE
✳	S503E	--	--'--		SILL HORIZONTAL
	S404E	--	4'-6"		KEY TIE
✳	S405E	--	--' -"-		KEY HORIZONTAL
✳	S406E	--	--' -"-		END BLOCK HORIZONTAL

✳ MINIMUM REINFORCEMENT LAP LENGTHS ARE AS FOLLOWS: NO. 4 BAR = 1'-8", NO. 5 BAR = 2'-1".

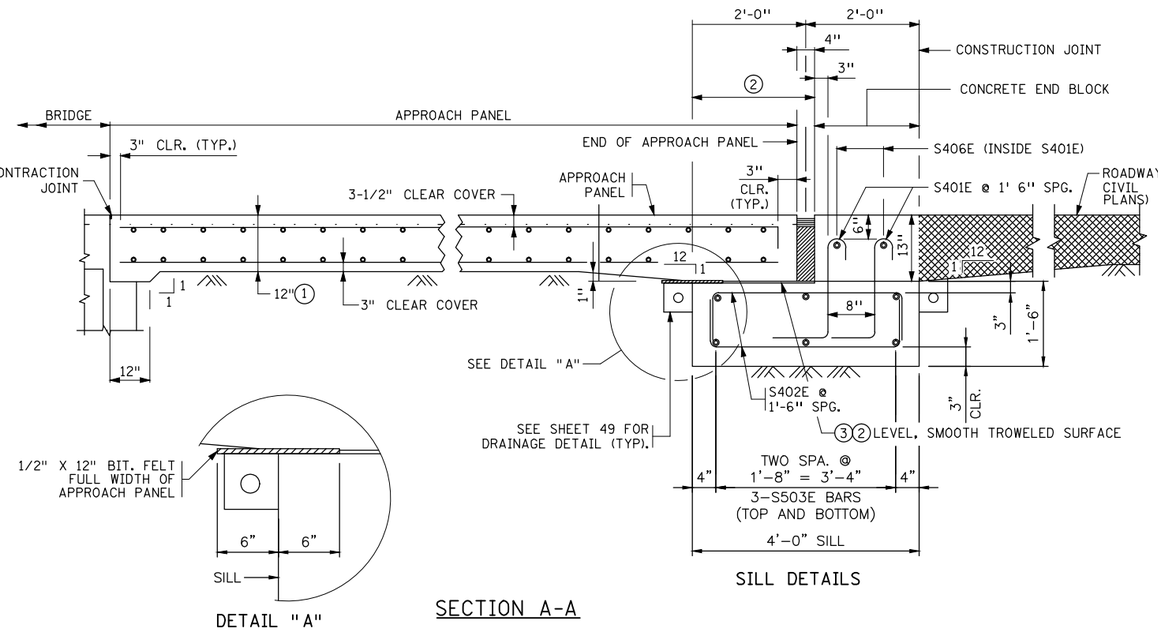

DETAIL "A"

SECTION A-A

SILL DETAILS

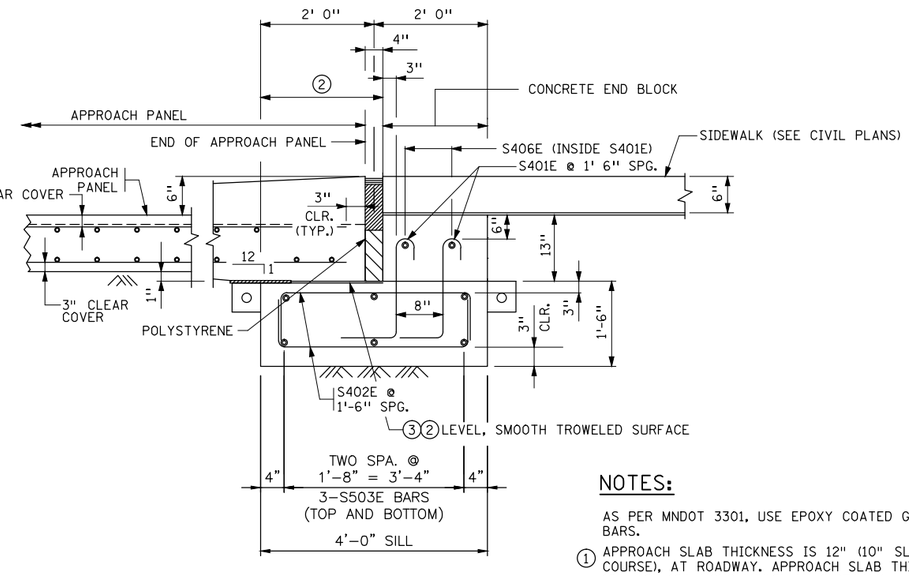

SECTION F-F

NOTES:

AS PER MNDOT 3301, USE EPOXY COATED GRADE 60 REINFORCEMENT BARS.

1. APPROACH SLAB THICKNESS IS 12" (10" SLAB + 2" WEARING COURSE), AT ROADWAY. APPROACH SLAB THICKNESS IS 12" TO 18" (12"-18" MONOLITHIC) AT SIDEWALK.
2. PLACE PLASTIC SHEETING (MNDOT 3756) AS APPROVED BY THE ENGINEER TO BREAK BOND. COVER AREA SHOWN IN DETAIL. (SHEETING IS INCIDENTAL).
3. REQUIRED CONSTRUCTION JOINT.
4. SEE SHEET 52 FOR TYPE OF EXPANSION JOINT. DETAILS OF EXPANSION JOINT TYPE E8H ARE SHOWN ON STANDARD PLAN 5-297.229.

NO.	DATE	BY	CHECK	DESIGN	REVISION / SUBMITTAL

DESIGNED BY: JBW | CHECKED BY: BLF
DRAWN BY: LMT | CHECKED BY: BLF

AECOM Kimley»Horn

90% SUBMISSION - 01/22/16

METROPOLITAN COUNCIL

SOUTHWEST

CIVIL - VOLUME 4G
CSAH 40 (GLENWOOD AVENUE) - EAST
BRIDGE 27C17
APPROACH PANNEL DETAILS 2

DISCIPLINE: STRUCTURES
SHEET NAME: CBR27C17-BRG-DTL-003-2

SHEET 52 OF 71

Jan, 18 2016 09:26 am V:\3400_ADC\CAD\SEGMENT E4\PLAN SHEETS\STRUCTURES\27C17\CBR27C17-BRG-DTL-003.dwg By: brad.woodash

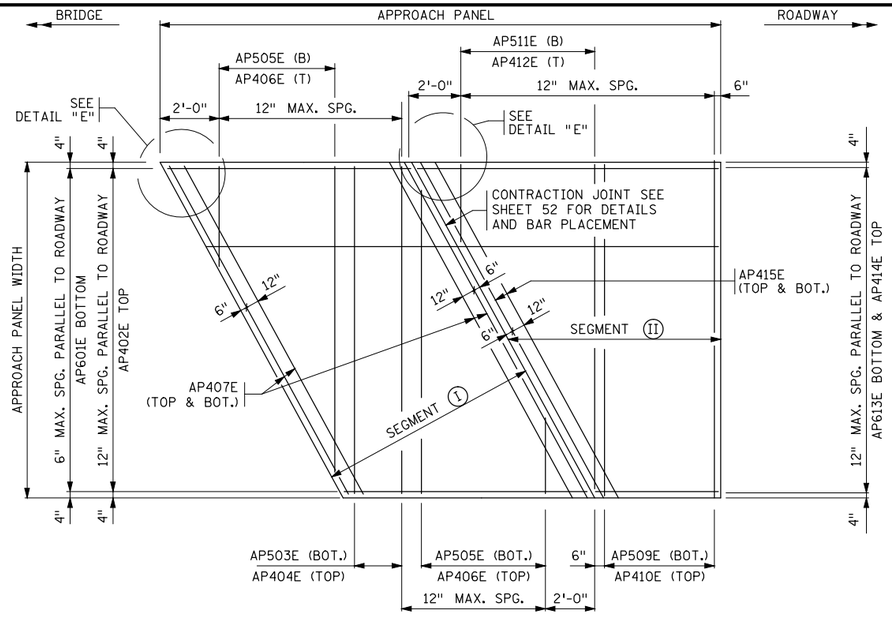

APPROACH PANEL REINFORCEMENT
OVER 10° SKEWS

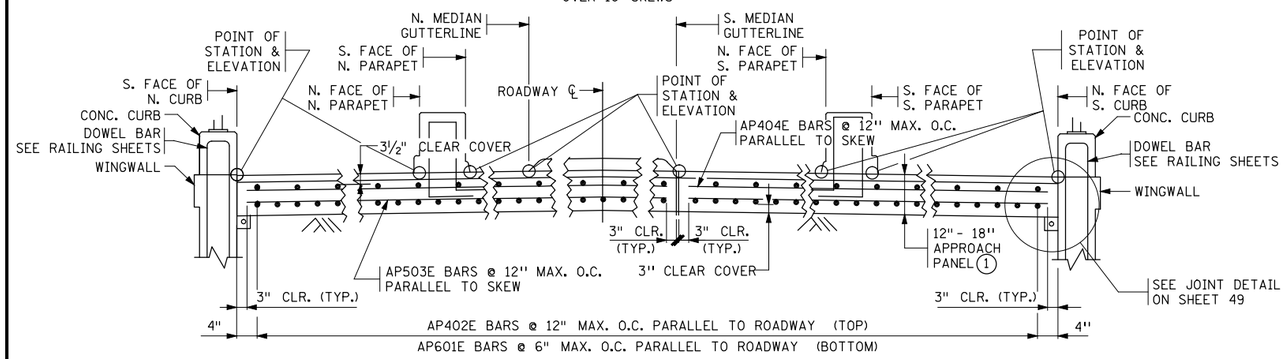

NORTH — TRANSVERSE SECTION H-H — SOUTH

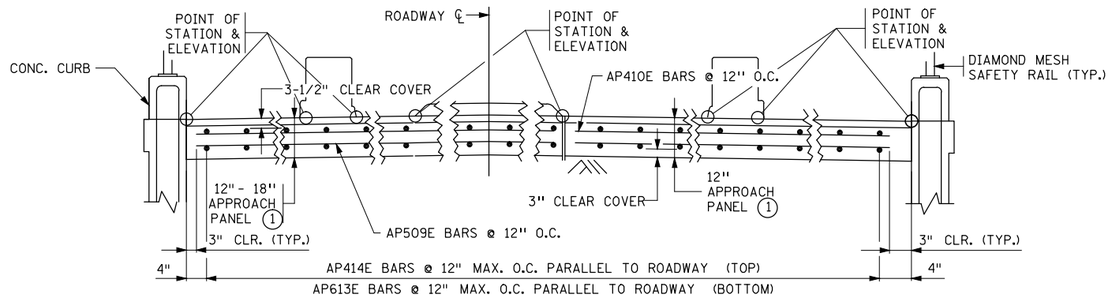

NORTH — TRANSVERSE SECTION E-E — SOUTH

ESTIMATED REINFORCEMENT QUANTITY FOR BRIDGE APPROACH PANELS

TYPE	LOCATION	ESTIMATIED WEIGHT
PANEL SEGMENT (I) (OVER 10°)	BRIDGE TO CONTRACTION JOINT	48.5 LB./SQ. YD.
PANEL SEGMENT (II) (OVER 10°)	CONTRACTION JOINT TO END OF APPROACH PANEL	35.0 LBS/SQ. YD.

NOTES:

TRANSVERSE BARS IN BOTH PANEL SEGMENTS ARE PERPENDICULAR TO ROADWAY CENTERLINE EXCEPT AP407E ARE PARALLEL TO SKEW IN SEGMENT (I) AND AP415E ARE PARRALLEL TO SKEW IN SEGMENT (II).

LONGITUDINAL BARS IN BOTH PANEL SEGMENTS ARE PARALLEL TO ROADWAY CENTERLINE.

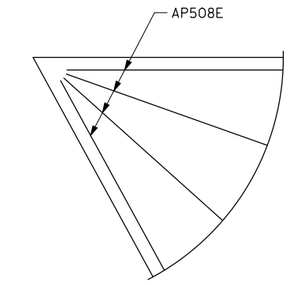

DETAIL "E"
FAN 4-AP508E BARS AS SHOWN
IN ACUTE CORNERS FOR SKEWS OVER 30°.

BILL OF REINFORCEMENT FOR BRIDGE APPROACH PANELS

CONTRACTOR IS REQUIRED TO COMPLETE THE BILL OF REINFORCEMENT TABLE AND PREPARE SHOP DRAWINGS AND SUBMIT THEM TO THE PROJECT ENGINEER AT LEAST 3 WEEKS BEFORE REBAR FABRICATION.

BAR	NO.	LENGTH	SHAPE	LOCATION
AP601E	--	--'-___	———	BOTTOM LONGITUDINAL
AP402E	--	--'-___	———	TOP LONGITUDINAL
AP503E	--	--'-___	———	BOTTOM TRANSVERSE
AP404E	--	--'-___	———	TOP TRANSVERSE
AP505E	- SER. OF --	--'-___ TO --'-___	———	BOTTOM TRANSVERSE
AP406E	- SER. OF --	--'-___ TO --'-___	———	TOP TRANSVERSE
AP407E	--	--'-___	———	TOP & BOTTOM EDGE
AP508E	--	8'-0	———	TOP CORNER - FAN
AP509E	--	--'-___	———	BOTTOM TRANSVERSE
AP410E	--	--'-___	———	TOP TRANSVERSE
AP511E	- SER. OF --	--'-___ TO --'-___	———	BOTTOM TRANSVERSE
AP412E	- SER. OF --	--'-___ TO --'-___	———	TOP TRANSVERSE
AP613E	- SER. OF --	--'-___ TO --'-___	———	BOTTOM LONGITUDINAL
AP414E	- SER. OF --	--'-___ TO --'-___	———	TOP LONGITUDINAL
AP415E	--	--'-___	———	TOP & BOTTOM EDGE
AP616E	--	5'-0	———	C2H-D JOINT

GENERAL NOTES:

AS PER MNDOT SPEC. 3301, USE EPOXY COATED GRADE 60 REINFORCEMENT BARS IN APPROACH PANEL, CONCRETE SILL AND CURB TRANSITION.

BARS MARKED WITH THE SUFFIX "E" SHALL BE EPOXY COATED IN ACCORDANCE WITH Mn/DOT SPEC. 3301.

FOR VARIABLE ROADWAY WIDTHS, VARY THE LAP LENGTH OF THE REINFORCEMENT.

MINIMUM REINFORCEMENT LAP LENGTHS ARE AS FOLLOWS: NO. 4 BAR = 1'-8", NO. 5 BAR = 2'-1", NO. 6 BAR = 2'-6".

ALL LAP SPLICES SHALL BE STAGGERED SUCH THAT NO MORE THAN 50% OF REBAR IS SPLICED AT THE SAME LOCATION.

(1) APPROACH SLAB THICKNESS IS 12" AT ROADWAY. (10" SLAB + 2" WEARING COURSE). APPROACH SLAB THICKNESS IS 12" TO 18" (12" TO 18" MONOLITHIC) AT SIDEWALK.

NO.	DATE	BY	CHECK	DESIGN	REVISION / SUBMITTAL

DESIGNED BY: JBW — CHECKED BY: BLF
DRAWN BY: NAO — CHECKED BY: BLF

AECOM Kimley»Horn

90% SUBMISSION - 01/22/16

METROPOLITAN COUNCIL — SOUTHWEST

CIVIL - VOLUME 4G
CSAH 40 (GLENWOOD AVENUE) - EAST
BRIDGE 27C17
APPROACH PANEL DETAILS 3

DISCIPLINE: STRUCTURES
SHEET NAME: CBR27C17-BRG-DTL-003-3

SHEET 53 OF 71

Jan. 18 2016 09:27 am V:\3400_ADC\CAD\SEGMENT E4\PLAN SHEETS\STRUCTURES\27C17\CBR27C17-BRG-DTL-003.dwg By: brad.wodash

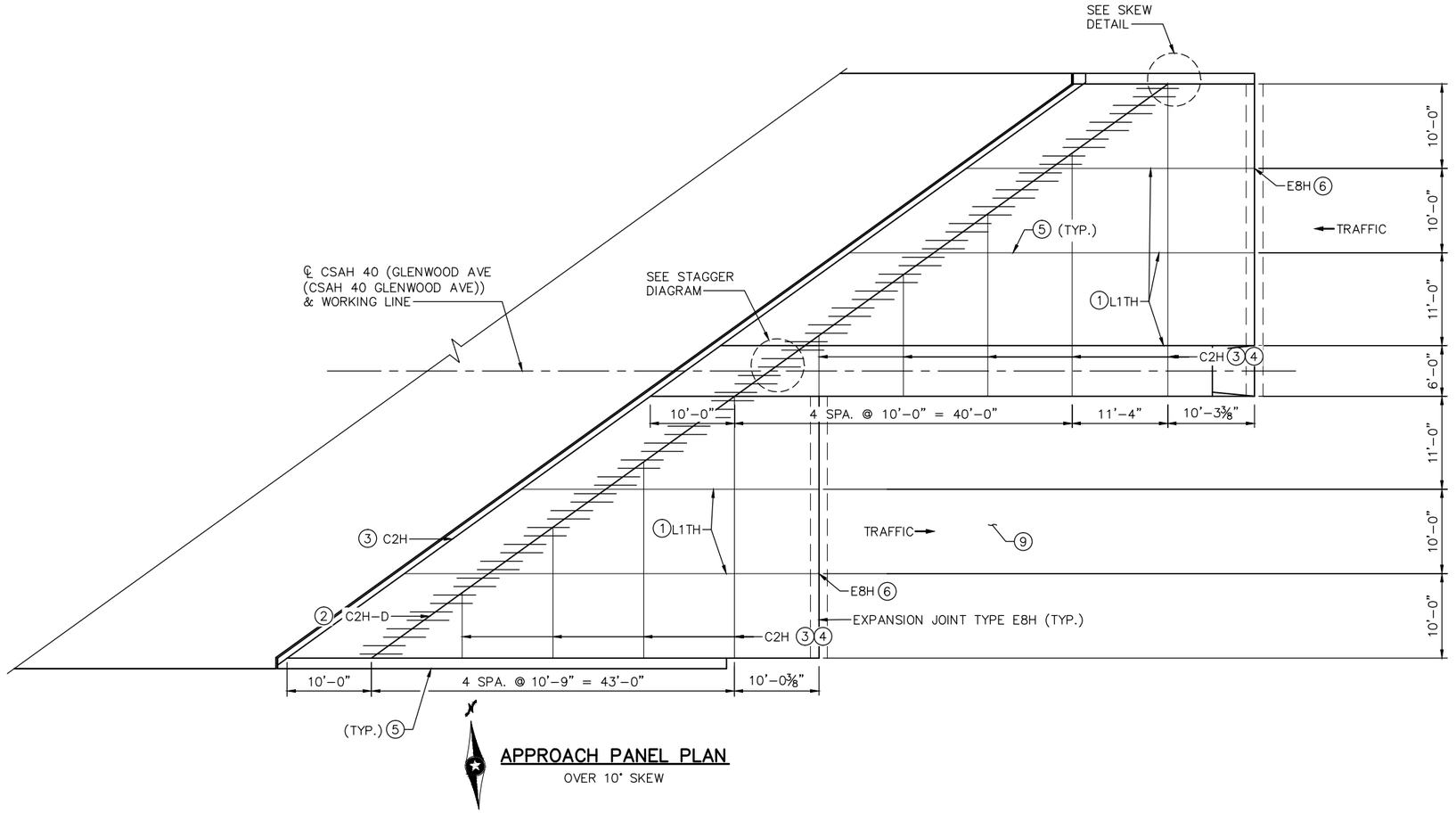

APPROACH PANEL PLAN
OVER 10° SKEW

APPROACH PANEL JOINT LAYOUT NOTES:

1. L1TH LONGITUDINAL JOINT. SEE SHEET 50.
2. USE JOINT TYPE C2H-D WITH AP616E BARS AT 12-INCH SPACING AT MID DEPTH OF THE SLAB, PARALLEL TO THE CENTERLINE OF THE ROADWAY. AP616E BARS ARE 5'-0" LONG. PLACE THE BAR WITH 2'-0" ON ONE SIDE OF THE JOINT AND 3'-0" ON THE OPPOSITE SIDE OF THE JOINT. ALTERNATE THE 2'-0" AND 3'-0" DIMENSIONS AS SHOWN ON THE PLAN. THE C2H-D JOINT AND AP616E BARS ARE REQUIRED ON ALL PANELS WITH A SKEW OVER 10 DEGREES. SEE SHEET 50.
3. C2H CONTRACTION JOINT. SEE SHEET 50.
4. MAXIMUM PANEL LENGTH OF 20'-0" FOR UP TO 40° SKEWS, 15'-0" FOR SKEWS OVER 40°.
5. ALL JOINTS SHALL BE SAWCUT. SAWCUTS SHALL BE MADE WHILE THE CONCRETE IS STILL GREEN. WHEN A CONCRETE WEARING COURSE IS SPECIFIED, THE JOINTS SHALL BE SAWN THROUGH BOTH THE WEARING COURSE AND THE UNDERLYING APPROACH SLAB IN A SINGLE OPERATION.
6. E8H JOINT REQUIRED IN CURB ADJACENT TO E8H JOINT.
7. SEE STANDARD PLANS 5-297.229 AND SHEET 49 FOR JOINT DETAIL FOR CURB ON WINGWALL.
8. WHEN SKEW IS OVER 45°. THE JOINT SHALL BE PERPENDICULAR TO EDGE OF APPROACH PANEL FOR 1' (TYP).
9. SEE CIVIL PLAN FOR PAVEMENT AND SHOULDER WIDTHS AND CONFIGURATION.

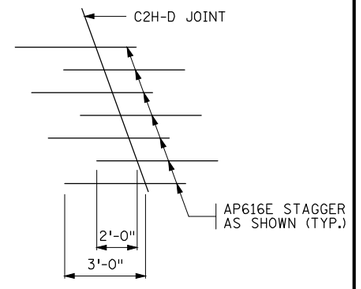

STAGGER DIAGRAM

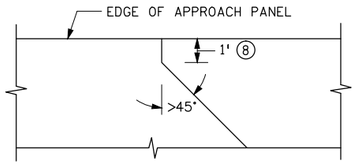

SKEW DETAIL
(PLAN VIEW)

NO.	DATE	BY	CHECK	DESIGN	REVISION / SUBMITTAL

DESIGNED BY: JBW | CHECKED BY: BLF
DRAWN BY: NAO | CHECKED BY: JBW

AECOM Kimley»Horn

90% SUBMISSION - 01/22/16

METROPOLITAN COUNCIL

SOUTHWEST

CIVIL - VOLUME 4G
CSAH 40 (GLENWOOD AVENUE) - EAST
BRIDGE 27C17
APPROACH PANEL DETAILS 4

DISCIPLINE: STRUCTURES
SHEET NAME: CBR27C17-BRG-DTL-003-4

SHEET 54 OF 71

Jan 18 2016 09:27 am V:\3400_ADC\CAD\SEGMENT E4\PLAN SHEETS\STRUCTURES\27C17\CBR27C17-BRG-DTL-003.dwg By: brad.wodash

EXPANSION JOINTS

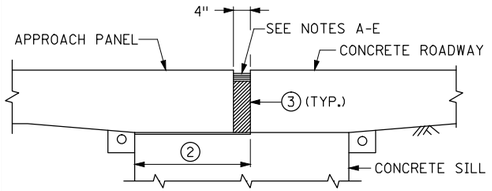

E8H JOINT DETAIL AT PAVEMENT

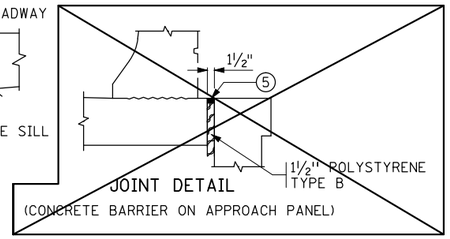

JOINT DETAIL
(CONCRETE BARRIER ON APPROACH PANEL)

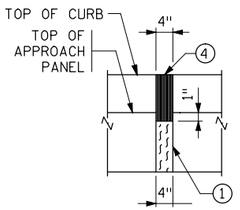

ELEVATION



SECTION THRU CURB

E8H JOINT AT CURB

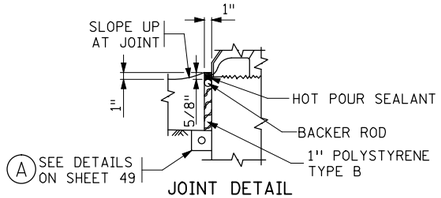

JOINT DETAIL
(CONCRETE CURB ON WINGWALL)
(A)

EXPANSION JOINT NOTES:

(1) PREFORMED JOINT FILLER MATERIAL, SPEC. 3702.

(2) PLACE PLASTIC SHEETING SPEC. 3756 AS APPROVED BY THE ENGINEER TO BREAK BOND. COVER AREA SHOWN IN DETAIL. SEE SILL DETAILS ON SHEET 50. (A)

(3) THE JOINT FACES SHALL BE CLEANED AND DRIED BY SANDBLASTING AND AIR BLASTING PRIOR TO SEALING THE JOINT.

(4) HOT POUR JOINT SEALER SPEC. 3725. TOP OF SEALER FLUSH TO 1/8 INCH BELOW TOP OF PAVEMENT SURFACE. MAKE TOP OF SEALER FOR CURB SECTION E8H JOINTS FLUSH WITH SURFACE (+ 1/8 INCH OR - 1/8 INCH).

(5) SEAL WITH SELF-LEVELING SILICONE PER MNDOT 3722.

E8H PRESSURE RELIEF JOINT MATERIAL INSTALLATION INSTRUCTIONS:

SEE MNDOT APPROVED/QUALIFIED PRODUCTS LIST.

FURNISH AND INSTALL JOINT MATERIAL IN ACCORDANCE WITH THE MANUFACTURER'S RECOMMENDATIONS AND THE FOLLOWING:

(A) EXPANSION JOINT FILLER MATERIALS USED FOR A 4 INCH PRESSURE RELIEF JOINT CONSISTS OF A PREFORMED FOAM PRODUCT HAVING MINIMUM DIMENSIONS OF 4.5 INCHES IN WIDTH (MAY BE LAMINATED) AND 8 INCHES IN DEPTH, AND A MINIMUM LENGTH OF 10 FEET. WHEN THE CONCRETE DEPTH IS GREATER THAN THE DEPTH OF THE PRESSURE RELIEF MATERIAL, FILL THE VOID BELOW THE MATERIAL WITH POLYSTYRENE. FURNISH AND INSTALL THE JOINT MATERIAL UNDER COMPRESSION WITH A LUBRICANT ADHESIVE APPLIED TO THE CONCRETE CONTACT SURFACES.

(B) SAW OR FORM THE JOINTS 4 INCHES WIDE BY THE FULL-DEPTH OF THE PANEL. INSPECT TO ASSURE THAT THE INSIDE WALLS OF THE JOINT HAVE BEEN SANDBLASTED, ARE DRY, SMOOTH AND FREE OF DEBRIS AND LOOSE PARTICLES. APPLY TAPE TO THE TOP 1 INCH OF THE INSIDE WALLS TO PREVENT THE LUBRICANT ADHESIVE FROM CONTAMINATING THE CONCRETE BONDING SURFACES OF THE SUBSEQUENTLY PLACED HOT POUR JOINT SEALER.

(C) PAINT THE INSIDE WALLS OF THE JOINT WITH LUBRICANT ADHESIVE AT THE RATE OF 1 GALLON PER 50 LINEAL FEET OF JOINT.

(D) PINCH THE BOTTOM OF THE MATERIAL TOGETHER AND PUSH IT DOWN INTO THE JOINT. WALK THE MATERIAL DOWN INTO THE JOINT; USE A SLEDGEHAMMER AND A 2 X 4 IF NECESSARY. APPLY LUBRICANT ADHESIVE TO THE ENDS OF THE PREFORMED FOAM MATERIAL WHEN BUTTING TWO PIECES TOGETHER.

(E) FURNISH AND INSTALL THE FOAM RELIEF JOINT MATERIAL TO A DEPTH OF APPROXIMATELY 7/8 INCH BELOW THE FINISHED CONCRETE SURFACE. AFTER INSTALLATION, REMOVE THE TAPE AND FILL THE VOID ON TOP OF THE FOAM MATERIAL WITH APPROXIMATELY 1/2 INCH OF HOT POUR JOINT SEALER (MNDOT 3723 OR 3725) TO A LEVEL OF 3/8 INCH +/- 1/4 INCH BELOW THE FINISHED CONCRETE SURFACE. THE HOT POUR JOINT SEALER SHOULD ONLY SLIGHTLY MELT INTO THE FOAM JOINT MATERIAL (TO PREVENT EXCESSIVE MELTING OF THE JOINT MATERIAL, PLACE THE HOT POUR SEALER AT THE LOWER END OF THE TEMPERATURE SPECIFICATION). CHECK FOR CORRECT TEMPERATURE BY PLACING HOT POUR SEALER ON A SAMPLE OF WASTE FOAM MATERIAL.

JOINT DETAILS

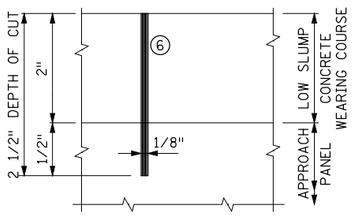

C2H & L1TH WITH CONCRETE WEARING COURSE (6)
(SAWED & SEALED PER SPEC. 3725)

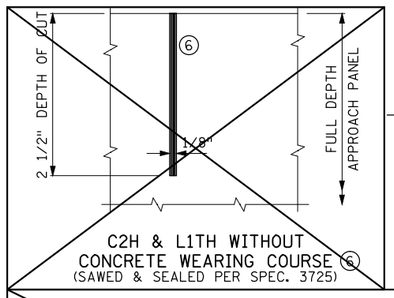

C2H & L1TH WITHOUT CONCRETE WEARING COURSE (6)
(SAWED & SEALED PER SPEC. 3725)

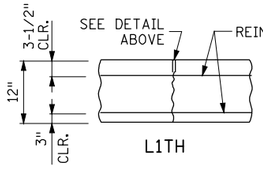

L1TH

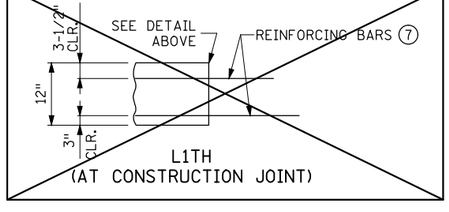

L1TH
(AT CONSTRUCTION JOINT)

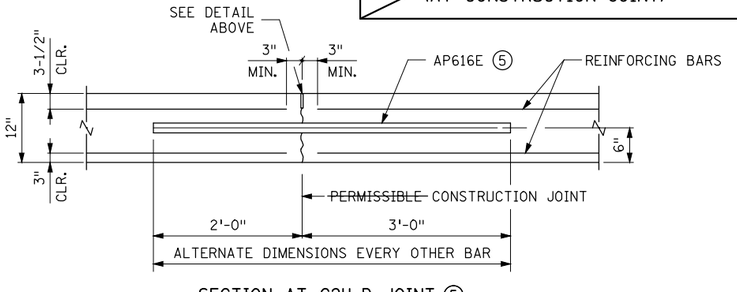

SECTION AT C2H-D JOINT (5)

JOINT NOTES:

(5) PERMISSIBLE CONSTRUCTION JOINT. AP616E BARS AT 12-INCH SPACING AT MID DEPTH OF SLAB, PARALLEL TO THE CENTERLINE OF THE ROADWAY. AP616E BARS ARE 5'-0" LONG. PLACE THE BAR WITH 2'-0" ON ONE SIDE OF THE JOINT AND 3'-0" ON THE OPPOSITE SIDE OF THE JOINT. ALTERNATE THE 2'-0" AND 3'-0" DIMENSION AS SHOWN ON THE PLAN.

(6) CLEAN AND DRY FULLY CURED JOINT FACES BY SANDBLASTING PRIOR TO SEALING THE JOINT.

(7) WHEN CONSTRUCTING A L1TH JOINT UNDER STAGED CONSTRUCTION, EXTEND NO. 4 BARS 1'-8" AND NO. 5 BARS 2'-1" PAST THE EDGE OF THE FIRST CONCRETE POUR. CONSTRUCT L1TH JOINT ACCORDING TO DETAIL SHOWN AFTER ADJACENT POUR IS COMPLETE.

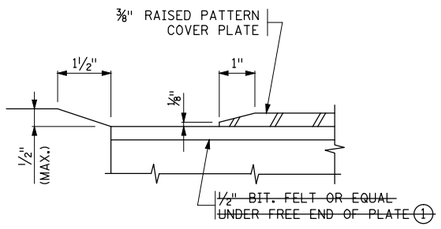

DETAIL "A"

SHEET MODIFICATION:
(A) DENOTES MODIFICATION TO STANDARD SHEET

SIDEWALK COVER PLATE

GENERAL NOTES:

GALVANIZE STRUCTURAL STEEL AFTER FABRICATION PER Mn/DOT SPEC. 3394
GALVANIZE FASTENERS PER Mn/DOT SPEC.3392.

STRUCTURAL STEEL SHALL COMPLY WITH Mn/DOT SPEC. 3306 OR Mn/DOT SPEC. 3309.

SHOP DRAWING SUBMITTALS REQUIRED PER Mn/DOT SPEC. 2471.

CAP SCREWS SHALL BE COUNTERSUNK 1/16" BELOW TOP OF PLATE.

~~FURNISHING AND INSTALLING SIDEWALK COVER PLATE IS INCIDENTAL.~~

~~(1) USE LARGEST SINGLE PIECE POSSIBLE. USE OF SMALL PIECES OR SCRAPS SECURED TOGETHER IS PROHIBITED.~~

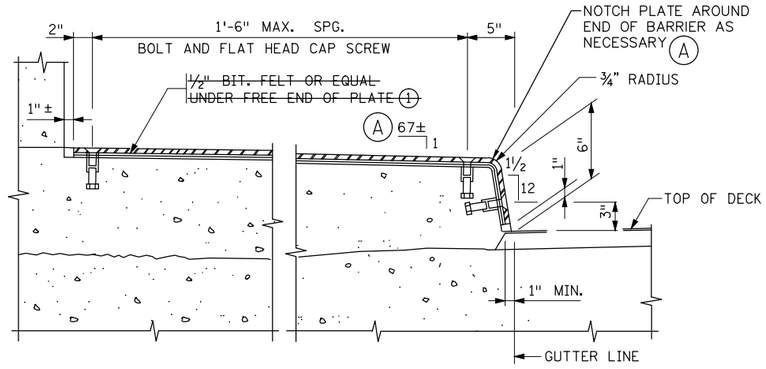

SECTION THROUGH SIDEWALK

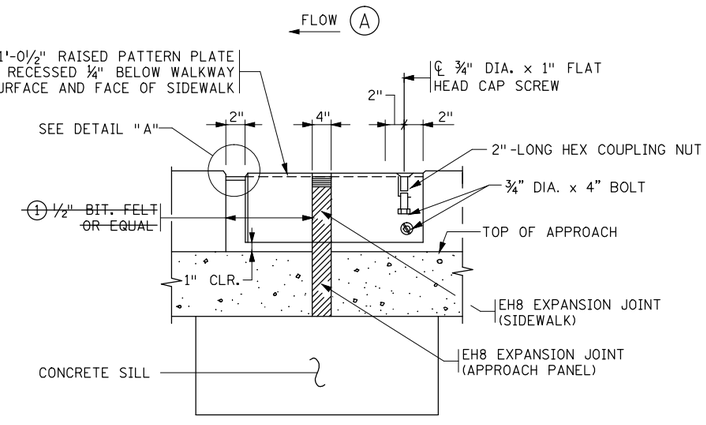

SIDEWALK ELEVATION

DRAFT-WORK IN PROCESS

STANDARD PLAN SHEET NO. 5-297.229 (MOD.)	TITLE: ~~BRIDGE~~ APPROACH PANEL ~~JOINT~~ DETAILS 5
STANDARD APPROVED: DECEMBER 20, 2011	

REVISION DATE 3-22-2013

SHEET NO. 55 OF ~~68~~ SHEETS

Jan, 18 2016 09:27 am V:\3400_ADC\CAD\SEGMENT E4\PLAN SHEETS\STRUCTURES\27C17\CBR27C17-BRG-DTL-003.dwg By: brad.wodash

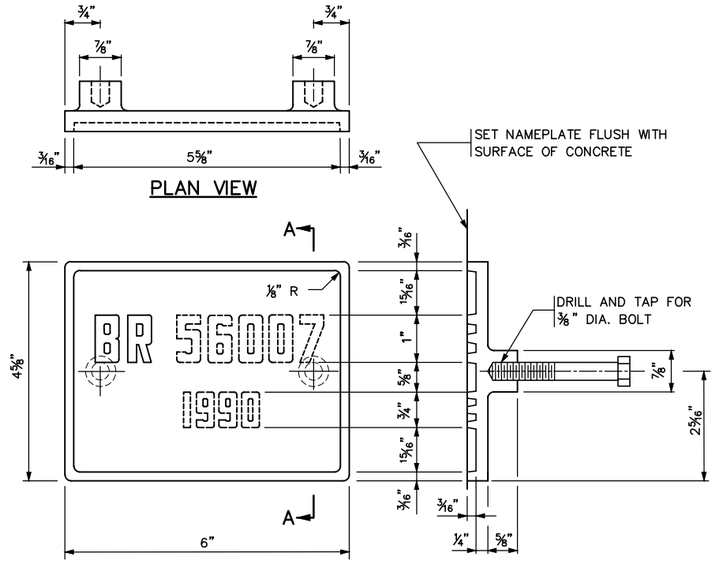

THE DASHED NUMBERS SHOWN ABOVE ARE FOR ILLUSTRATION.
DATA TO BE SHOWN ON NAMEPLATE IS AS FOLLOWS:

BRIDGE 27C17

YEAR ①

NUMBERS FOR NAMEPLATE

NOTES:

MATERIAL SHALL COMPLY WITH SPEC. 3327.

LETTERS AND NUMBERS SHALL CONFORM TO THOSE SHOWN.

DRAFT ON LETTERS AND NUMBERS SHALL NOT BE MORE THAN 3" IN 12".

HORIZONTAL SPACING OF LETTERS AND NUMBERS SHALL PRODUCE A BALANCED LAYOUT IN PROPORTION TO SPACING SHOWN.

TOP SURFACE OF LETTERS, NUMBERS AND FRAMES SHALL BE BURNISHED.

FURNISH 2 STEEL BOLTS ⅜ " DIA. x 3" LONG WITH EACH PLATE.

ALL DIMENSIONS FOR ¾" HIGH LETTERS AND NUMBERS SHALL BE IN DIRECT PROPORTION TO THOSE SHOWN FOR THE 1" HIGH LETTERS AND NUMBERS.

① YEAR OF CONSTRUCTION

APPROVED: NOVEMBER 22, 2002	STATE OF MINNESOTA DEPARTMENT OF TRANSPORTATION	REVISION 09–11–2014	DETAIL NO.
STATE BRIDGE ENGINEER	BRIDGE NAMEPLATE (FOR NEW BRIDGES)		B101

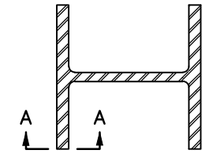

SECTION AT SPLICE

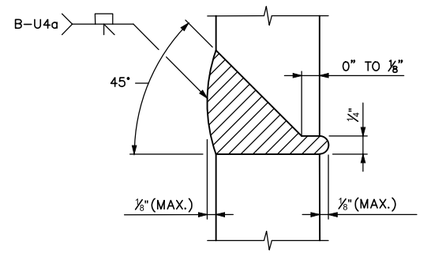

SECTION A–A

100% BUTT WELDED PILE SPLICE

NOTES:

CELLULOSIC TYPE ELECTRODES E–6010 OR E–6011 SHALL BE USED FOR 100% BUTT WELDED SPLICES.

ELECTRODES WHICH HAVE BECOME WET, SOILED OR DAMAGED SHALL NOT BE USED.

WELDING SHALL NOT BE DONE WHEN THE AMBIENT TEMPERATURE IS LOWER THAN 0° F. OR WHEN THE PILE IS WET OR EXPOSED TO FALLING RAIN OR SNOW. WHEN THE PILE METAL TEMPERATURE IS BELOW 32° F., THE PILE METAL IN THE AREA OF THE WELD SHALL BE HEATED TO A MINIMUM TEMPERATURE OF 70° F. AND MAINTAINED AT THIS TEMPERATURE DURING WELDING.

APPROVED: NOVEMBER 22, 2002	STATE OF MINNESOTA DEPARTMENT OF TRANSPORTATION	REVISION: 11–06–2013	DETAIL NO.
STATE BRIDGE ENGINEER	PILE SPLICE (STEEL H BEARING PILES 10" TO 14")		B202

NO.	DATE	BY	CHECK	DESIGN	REVISION / SUBMITTAL

DESIGNED BY: BAW CHECKED BY: BLF

DRAWN BY: LMT CHECKED BY: BLF

AECOM Kimley»Horn

90% SUBMISSION - 01/22/16

METROPOLITAN COUNCIL

SOUTHWEST Green Line LRT Extension

CIVIL - VOLUME 4G
CSAH 40 (GLENWOOD AVENUE) - EAST
BRIDGE 27C17
BRIDGE DETAILS 1

DISCIPLINE: STRUCTURES

SHEET NAME: CBR27C17-BRG-DTL-001-1

SHEET 56 OF 71

Jan, 18 2016 09:27 am V:\3400_ADC\CAD\SEGMENT E4\PLAN SHEETS\STRUCTURES\27C17\CBR27C17-BRG-DTL-001.dwg By: brad.wodash

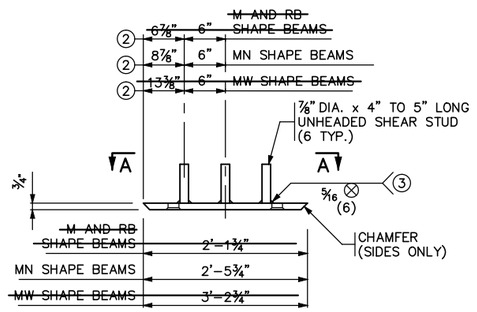

FRONT ELEVATION

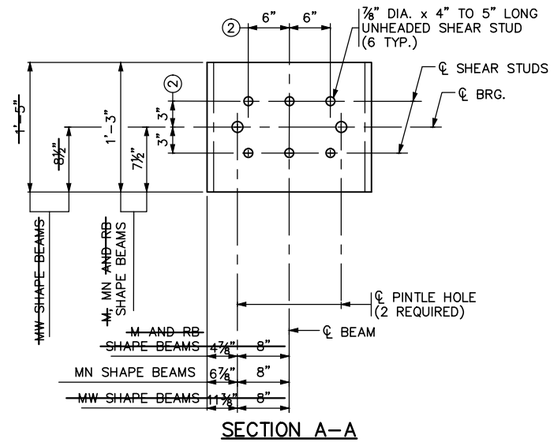

SECTION A–A

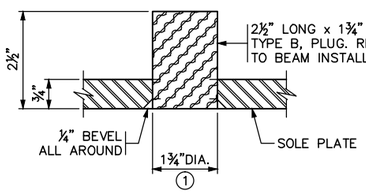

PINTLE HOLE DETAIL

NOTES:

MATERIAL TO BE STRUCTURAL STEEL PER MnDOT SPEC. 3306.

WELDED STUDS TO BE WELDABLE CARBON STEEL PER MnDOT SPEC. 3391.2D.

SOLE PLATE FOR BEARING ASSEMBLY TO BE GALVANIZED PER MnDOT SPEC. 3394 AFTER FABRICATION.

PINTLE HOLES SHALL BE FREE OF ZINC BUILD UP FROM GALVANIZING.

SOLE PLATES ARE INCIDENTAL TO PRESTRESSED CONCRETE BEAMS.

① FOR 1½" DIA. PINTLES.

② THESE DIMENSIONS MAY BE MODIFIED TO CLEAR PRESTRESSED STRANDS. HOWEVER, CHANGES MUST BE APPROVED BY THE ENGINEER.

③ THE REQUIREMENTS FOR WELDING STUDS SHALL COMPLY WITH AASHTO/AWS D1.1.

APPROVED: SEPTEMBER 22, 2011	STATE OF MINNESOTA DEPARTMENT OF TRANSPORTATION	REVISED	DETAIL NO.
Nancy Daubenberger STATE BRIDGE ENGINEER	SOLE PLATE (PRESTRESSED CONCRETE BEAMS) (FOR BEARINGS WITH PINTLES)		B303

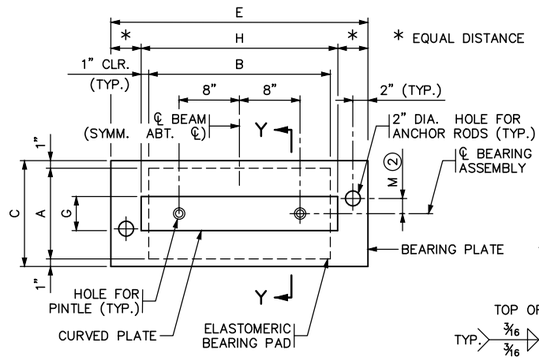

PLAN

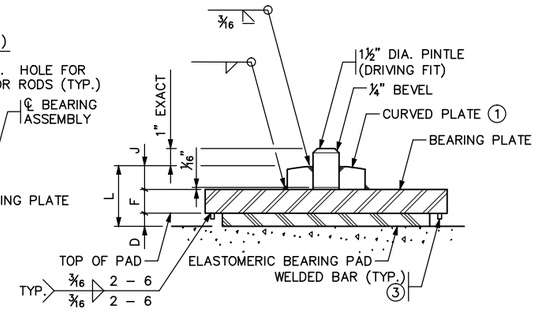

SECTION Y–Y

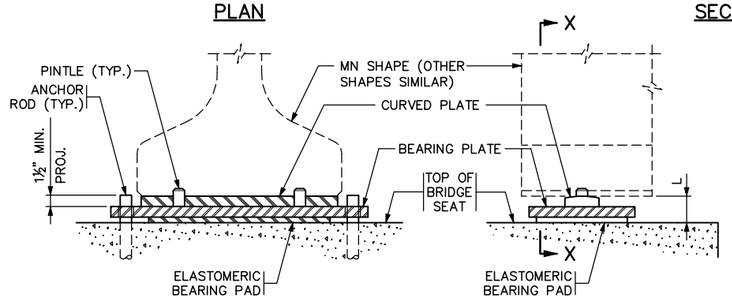

SECTION X–X

SIDE ELEVATION

ANCHOR RODS NOT SHOWN

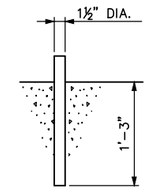

ANCHOR ROD DETAIL

TABLE

ASSEMBLY TYPE	LOCATION	BEAM SIZE	BEARING PAD SIZE A	B	D	SHAPE FACTOR	BEARING PLATE SIZE C	E	F	CURVED PLATE SIZE G	H	J	ANCHOR ROD OFFSET +/–②	M	ASSY. HEIGHT L	CURVED PLATE R ①
F1	E. ABUT.	MN45	12"	24"	½"	8.0	14"	38"	1½"	4½"	26"	1¼"	NA	0"	3¼"	16"
~~F1~~	~~E. ABUT.~~	~~MW~~	~~16"~~	~~36"~~	~~½"~~	~~11.1~~	~~18"~~		~~1½"~~	~~4½"~~	~~38"~~	~~1¼"~~			~~3¼"~~	

NOTES:

PROVIDE ELASTOMERIC MATERIALS AND PAD CONSTRUCTION PER SPEC. 3741.

PROVIDE STEEL PLATES PER SPEC. 3306.

PROVIDE ANCHOR RODS PER SPEC. 3385, TYPE A. GALVANIZE PER SPEC. 3392.

PROVIDE PINTLES PER SPEC. 3309.

GALVANIZE STRUCTURAL STEEL BEARING ASSEMBLY AFTER FABRICATION PER SPEC. 3394, EXCEPT AS NOTED.

~~PAYMENT FOR BEARING ASSEMBLY INCLUDES ALL MATERIAL ON THIS DETAIL.~~

① THE MIN. RADIUS IS 16" UNLESS OTHERWISE SPECIFIED IN THE TABLE. THE MAX. RADIUS IS 24". FINISH TO 250 MICRO. THE FINISHED THICKNESS OF THE PLATE MAY BE 1/16" LESS THAN SHOWN.

② "+" DENOTES OFFSET AS SHOWN.
"–" DENOTES OFFSET OPPOSITE OF SHOWN.

③ ⅜" X ⅜" BAR INSTALLED ON BEARING PLATE AROUND PERIMETER OF BEARING PAD. BAR LENGTH IS 2" LESS THAN ADJACENT PAD DIMENSION, CENTERED ON PAD. CENTERLINE OF BAR TO EDGE OF PAD DIMENSION = ½".

DESIGN DATA:
MAXIMUM HORIZONTAL LOAD IS 70 KIPS FOR 1½" PINTLES.

APPROVED: SEPTEMBER 22, 2011	STATE OF MINNESOTA DEPARTMENT OF TRANSPORTATION	REVISED	DETAIL NO.
Nancy Daubenberger STATE BRIDGE ENGINEER	CURVED PLATE BEARING ASSEMBLY (PRESTRESSED CONCRETE BEAMS) (FIXED)	11–06–2013 11–03–2015	B310

NO.	DATE	BY	CHECK	DESIGN	REVISION / SUBMITTAL

DESIGNED BY: BAW CHECKED BY: BLF
DRAWN BY: LMT CHECKED BY: BLF

AECOM Kimley»Horn

90% SUBMISSION - 01/22/16

METROPOLITAN COUNCIL

SOUTHWEST Green Line LRT Extension

CIVIL - VOLUME 4G
CSAH 40 (GLENWOOD AVENUE) - EAST
BRIDGE 27C17
BRIDGE DETAILS 2

DISCIPLINE: STRUCTURES
SHEET NAME: CBR27C17-BRG-DTL-001-2

SHEET 57 OF 71

Jan. 18 2016 09:27 am V:\3400_ADC\CAD\SEGMENT E4\PLAN SHEETS\STRUCTURES\27C17\CBR27C17-BRG-DTL-001.dwg By: brad.wodash

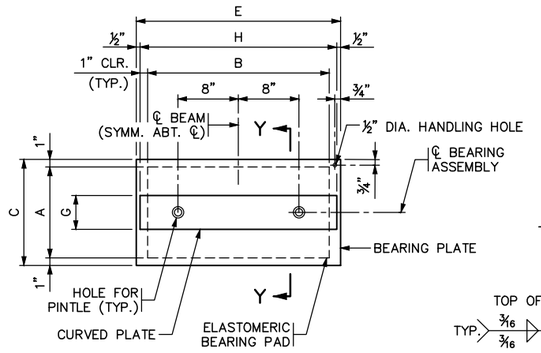

PLAN

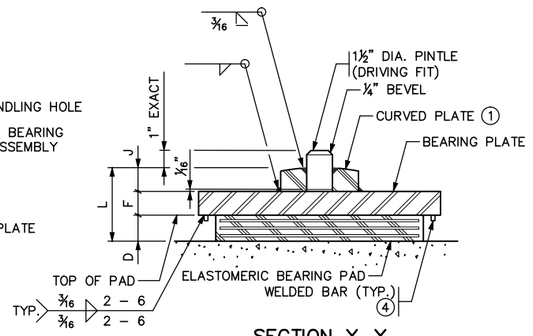

SECTION Y–Y

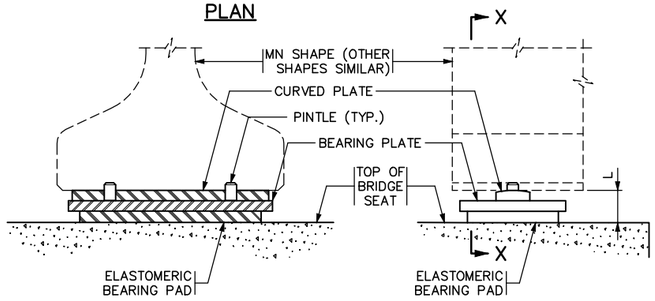

SECTION X–X

SIDE ELEVATION

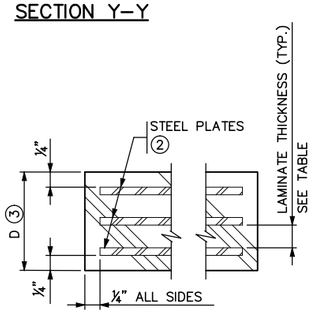

SECTION THROUGH ELASTOMERIC BEARING PAD

TABLE

ASSEMBLY TYPE	LOCATION	BEAM SIZE	BEARING PAD SIZE A	BEARING PAD SIZE B	BEARING PAD SIZE D	STEEL PLATES NO.	STEEL PLATES THICK.	LAMINATES NO.	LAMINATES THICK.	SHAPE FACTOR	BEARING PLATE SIZE C	BEARING PLATE SIZE E	BEARING PLATE SIZE F	CURVED PLATE SIZE G	CURVED PLATE SIZE H	CURVED PLATE SIZE J	ASSY. HEIGHT L	CURVED PLATE R ①
E1	E. PIER	MN45	12"	24"	1⅞"	3	⅛"	2	½"	8.0	14"	27"	1½"	4½"	26"	1¼"	4⅝"	16"
~~—~~	~~—~~	~~MW~~	~~16"~~	~~36"~~			~~⅛"~~		~~½"~~		~~18"~~	~~39"~~	~~1½"~~	~~4½"~~	~~38"~~	~~1¼"~~		

NOTES:

PROVIDE ELASTOMERIC MATERIALS AND PAD CONSTRUCTION PER SPEC. 3741.

PROVIDE STEEL PLATES PER SPEC. 3306.

PROVIDE PINTLES PER SPEC. 3309.

GALVANIZE STRUCTURAL STEEL BEARING ASSEMBLY AFTER FABRICATION PER SPEC. 3394, EXCEPT AS NOTED.

~~PAYMENT FOR BEARING ASSEMBLY INCLUDES ALL MATERIAL ON THIS DETAIL.~~

① THE MIN. RADIUS IS 16" UNLESS OTHERWISE SPECIFIED IN THE TABLE. THE MAX. RADIUS IS 24". FINISH TO 250 MICRO. THE FINISHED THICKNESS OF THE PLATE MAY BE 1⁄16" LESS THAN SHOWN.

② DO NOT GALVANIZE THESE PLATES.

③ THE TOTAL THICKNESS SHOWN INCLUDES THE STEEL PLATES.

④ ⅜" X ⅜" BAR INSTALLED ON BEARING PLATE AROUND PERIMETER OF BEARING PAD. BAR LENGTH IS 2" LESS THAN ADJACENT PAD DIMENSION, CENTERED ON PAD. CENTERLINE OF BAR TO EDGE OF PAD DIMENSION = ½".

DESIGN DATA:

MAXIMUM HORIZONTAL LOAD IS 70 KIPS FOR 1½" PINTLES.

APPROVED: SEPTEMBER 22, 2011	STATE OF MINNESOTA DEPARTMENT OF TRANSPORTATION	REVISED 11–03–2015	DETAIL NO.
Nancy Daubenberger STATE BRIDGE ENGINEER	CURVED PLATE BEARING ASSEMBLY (PRESTRESSED CONCRETE BEAMS) (EXPANSION)		B311

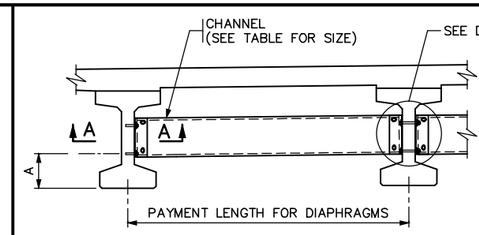

PART TRANSVERSE SECTION AT DIAPHRAGM

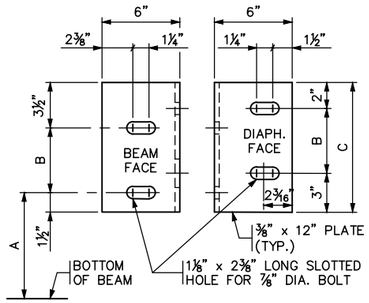

DIAPHRAGM CONNECTION

FOR 36M AND MN45 BEAMS

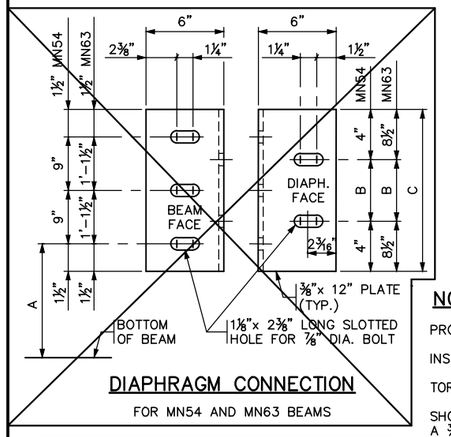

DIAPHRAGM CONNECTION

FOR MN54 AND MN63 BEAMS

TABLE

BEAM HEIGHT	DISTANCE A	DISTANCE B	DISTANCE C	CHANNEL SIZE
~~36M~~	~~1' 3"~~	~~7"~~	~~1' 0"~~	~~C12x20.7~~
MN45	1'–7¾"	7"	1'–0"	C12x20.7
~~MN54~~	~~1'–7¾"~~	~~1' 1"~~	~~1' 9"~~	~~MC18x42.7~~
~~MN63~~	~~1'–7¾"~~	~~1' 1"~~	~~2' 6"~~	~~MC18x42.7~~

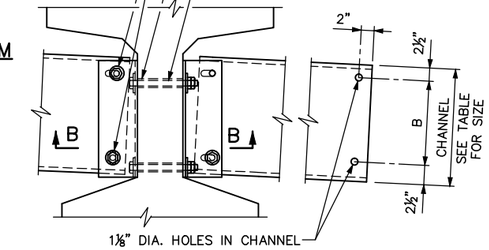

DETAIL "A"

INTERIOR BEAM WITH CONTINUOUS LINE OF DIAPHRAGMS

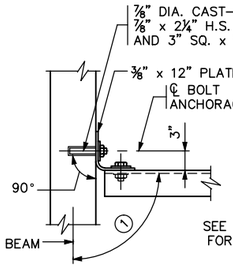

SECTION A–A

TYPICAL SECTION AT ALL FASCIA BEAMS

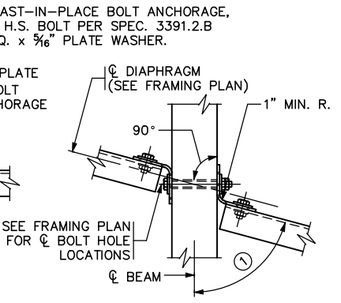

SECTION B–B

TYPICAL SECTION AT INTERIOR BEAM WITH CONTINUOUS OR STAGGERED INTERMEDIATE DIAPHRAGMS

NOTES:

PROVIDE STEEL PER SPEC. 3306.

INSTALL PER SPEC. 2405.3.K.

TORQUE ALL BOLTS, INCLUDING ANCHOR BOLTS TO 80 FT.–LBS.

SHOP BEND THE LEG OF THE 12" PLATE TO CONFORM TO THE DIAPHRAGM. A ⅜" x 6" x 6" ANGLE MAY BE USED FOR DIAPHRAGMS PERPENDICULAR TO BEAMS.

~~INCLUDE ALL STRUCTURAL STEEL SHOWN ON THIS DETAIL, INCLUDING BOLTS AND WASHERS, IN UNIT PRICE BID FOR DIAPHRAGMS FOR PRESTRESSED BEAMS.~~

BENT PLATES MAY BE USED IN PLACE OF CHANNELS IF THE BENT PLATES HAVE THE SAME HEIGHT AS THE CHANNELS THEY REPLACE, ARE 5⁄16" IN THICKNESS, AND HAVE LEGS 5" LONG.

GALVANIZE STEEL PLATES AND SHAPES PER SPEC. 3394.

GALVANIZE BOLTS, NUTS AND WASHERS PER SPEC. 3392.

① FOR SKEW ANGLES UNDER 20°, USE 90° LESS THE SKEW ANGLE.
FOR SKEW ANGLES OVER 20°, USE 90°.

APPROVED: NOVEMBER 03, 2015	STATE OF MINNESOTA DEPARTMENT OF TRANSPORTATION		DETAIL NO.
Beverly A. J. Farnaker STATE BRIDGE ENGINEER	STEEL INTERMEDIATE DIAPHRAGM (FOR 36M, MN45 – MN63 PRESTRESSED CONCRETE BEAMS)		B403

NO.	DATE	BY	CHECK	DESIGN	REVISION / SUBMITTAL

DESIGNED BY: BAW CHECKED BY: BLF
DRAWN BY: LMT CHECKED BY: BLF

AECOM Kimley»Horn

90% SUBMISSION - 01/22/16

METROPOLITAN COUNCIL

SOUTHWEST Green Line LRT Extension

CIVIL - VOLUME 4G
CSAH 40 (GLENWOOD AVENUE) - EAST
BRIDGE 27C17
BRIDGE DETAILS 3

DISCIPLINE: STRUCTURES
SHEET NAME: CBR27C17-BRG-DTL-001-3

SHEET 58 OF 71

Jan. 18 2016 09:27 am V:\3400_ADC\CAD\SEGMENT E4\PLAN SHEETS\STRUCTURES\27C17\CBR27C17-BRG-DTL_001.dwg By: brad.wodash

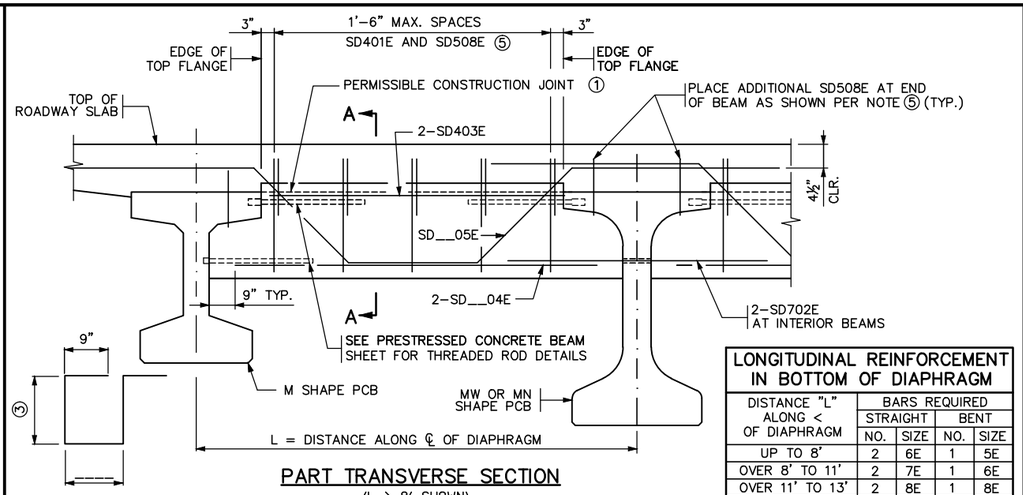

PART TRANSVERSE SECTION

(L > 8′ SHOWN)

SD401E

LONGITUDINAL REINFORCEMENT IN BOTTOM OF DIAPHRAGM				
DISTANCE "L" ALONG < OF DIAPHRAGM	BARS REQUIRED			
	STRAIGHT		BENT	
	NO.	SIZE	NO.	SIZE
UP TO 8′	2	6E	1	5E
OVER 8′ TO 11′	2	7E	1	6E
OVER 11′ TO 13′	2	8E	1	8E
OVER 13′ TO 15′	2	9E	1	10E
OVER 15′ TO 18′	2	11E	1	11E

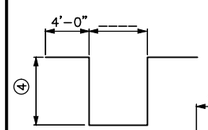

SD506E

(IF L ≤ 8′)

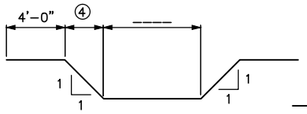

SD_05E

(IF L > 8′)

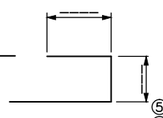

SD508E ⑤

BILL OF REINFORCEMENT FOR END DIAPHRAGM				
BAR	NO.	LENGTH	SHAPE	LOCATION
SD401E				VERTICAL TIE
SD702E		5′–0"		LONG. THRU BEAM
SD403E				LONG. TOP
SD__04E				LONG. BOTTOM
SD__05E				LONGITUDINAL
SD506E				LONGITUDINAL
⑤ SD507E				LONGITUDINAL
⑤ SD508E				VERTICAL TIE

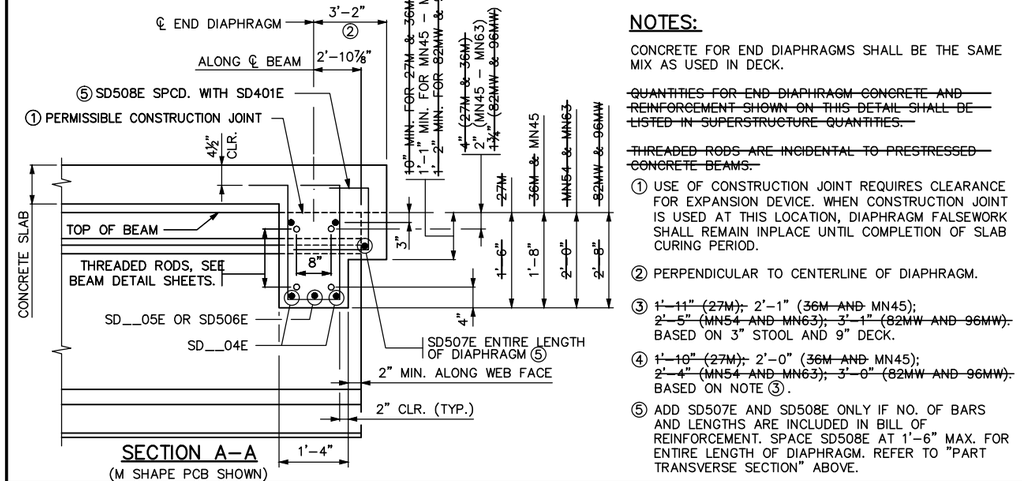

SECTION A–A

(M SHAPE PCB SHOWN)

NOTES:

CONCRETE FOR END DIAPHRAGMS SHALL BE THE SAME MIX AS USED IN DECK.

~~QUANTITIES FOR END DIAPHRAGM CONCRETE AND REINFORCEMENT SHOWN ON THIS DETAIL SHALL BE LISTED IN SUPERSTRUCTURE QUANTITIES.~~

~~THREADED RODS ARE INCIDENTAL TO PRESTRESSED CONCRETE BEAMS.~~

① USE OF CONSTRUCTION JOINT REQUIRES CLEARANCE FOR EXPANSION DEVICE. WHEN CONSTRUCTION JOINT IS USED AT THIS LOCATION, DIAPHRAGM FALSEWORK SHALL REMAIN INPLACE UNTIL COMPLETION OF SLAB CURING PERIOD.

② PERPENDICULAR TO CENTERLINE OF DIAPHRAGM.

③ ~~1′–11" (27M),~~ 2′–1" (~~36M AND~~ MN45); ~~2′–5" (MN54 AND MN63); 3′–1" (82MW AND 96MW).~~ BASED ON 3" STOOL AND 9" DECK.

④ ~~1′–10" (27M),~~ 2′–0" (~~36M AND~~ MN45); ~~2′–4" (MN54 AND MN63); 3′–0" (82MW AND 96MW).~~ BASED ON NOTE ③.

⑤ ADD SD507E AND SD508E ONLY IF NO. OF BARS AND LENGTHS ARE INCLUDED IN BILL OF REINFORCEMENT. SPACE SD508E AT 1′–6" MAX. FOR ENTIRE LENGTH OF DIAPHRAGM. REFER TO "PART TRANSVERSE SECTION" ABOVE.

APPROVED: SEPTEMBER 22, 2011	STATE OF MINNESOTA DEPARTMENT OF TRANSPORTATION	REVISED 04–17–2013 11–06–2013	DETAIL NO.
Nancy Daubenberger STATE BRIDGE ENGINEER	CONCRETE END DIAPHRAGM (27M & 36M, MN45 – MN63, & 96MW PRESTRESSED CONCRETE BEAMS) (PARAPET ABUTMENT)		B814

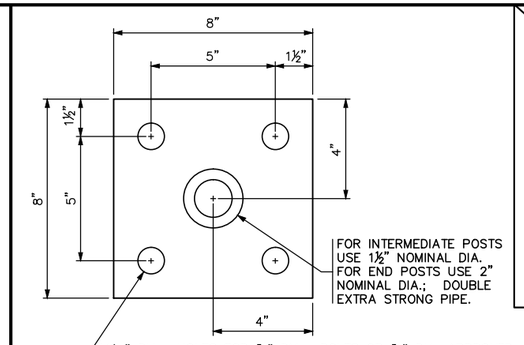

PLAN VIEW – TYPE A

ESTIMATED WEIGHT = 12 OR 14 LBS.

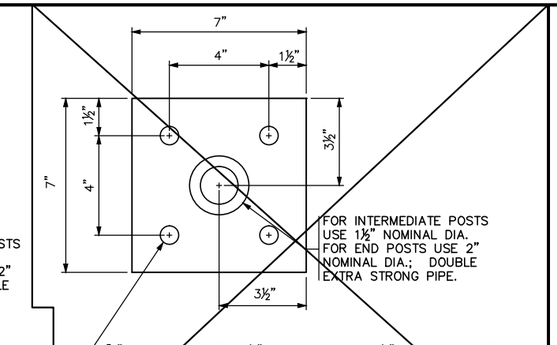

PLAN VIEW – TYPE B

ESTIMATED WEIGHT = 10 OR 12 LBS.

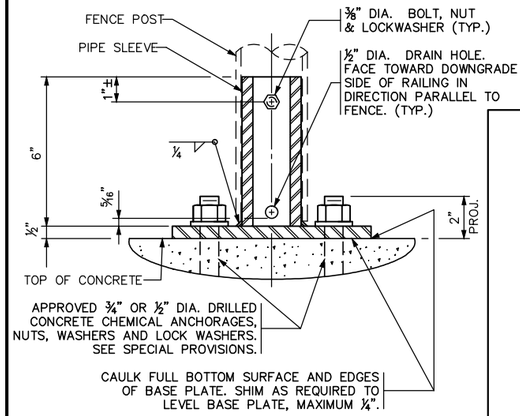

TYPICAL SECTION

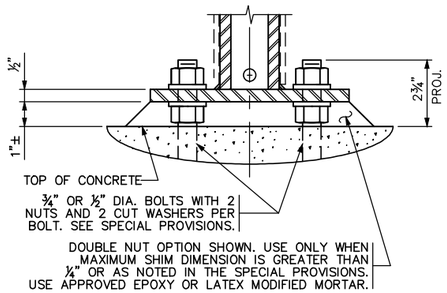

GROUT ALTERNATE

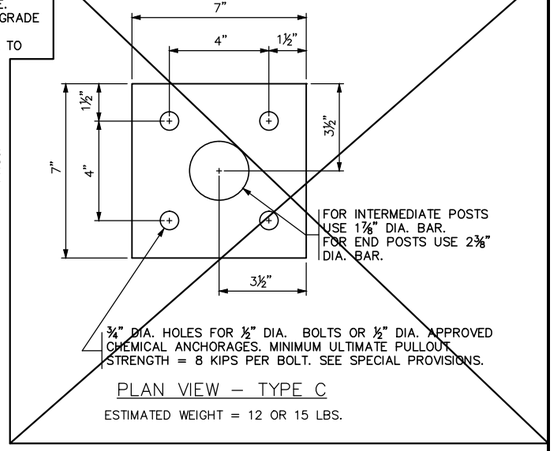

PLAN VIEW – TYPE C

ESTIMATED WEIGHT = 12 OR 15 LBS.

NOTES:

STRUCTURAL STEEL PER Mn/DOT SPEC. 3306

STRUCTURAL PIPE PER Mn/DOT SPEC. 3362

GALVANIZE THE FENCE POST ANCHORAGE AFTER FABRICATION PER Mn/DOT SPEC. 3394. GALVANIZE THE FASTENERS PER Mn/DOT SPEC. 3392.

DOUBLE EXTRA STRONG PIPE WEIGHTS:
1½" NOMINAL DIA. = 6.41 LBS./FT.
2" NOMINAL DIA. = 9.03 LBS./FT.

APPROVED: NOVEMBER 22, 2002	STATE OF MINNESOTA DEPARTMENT OF TRANSPORTATION	REVISION	DETAIL NO.
Daniel D Magnuson STATE BRIDGE ENGINEER	FENCE POST ANCHORAGE		B905

NO.	DATE	BY	CHECK	DESIGN	REVISION / SUBMITTAL

DESIGNED BY: BAW CHECKED BY: BLF

DRAWN BY: LMT CHECKED BY: BLF

AECOM Kimley»Horn

90% SUBMISSION - 01/22/16

METROPOLITAN COUNCIL

SOUTHWEST Green Line LRT Extension

CIVIL - VOLUME 4G
CSAH 40 (GLENWOOD AVENUE) - EAST
BRIDGE 27C17
BRIDGE DETAILS 4

DISCIPLINE: STRUCTURES

SHEET NAME: CBR27C17-BRG-DTL-001-4

SHEET 59 OF 71

Jan, 18 2016 09:28 am v:\3400_ADC\CAD\SEGMENT E4\PLAN SHEETS\STRUCTURES\27C17\CBR27C17-BRG-DTL-001.dwg By: brad.wodash

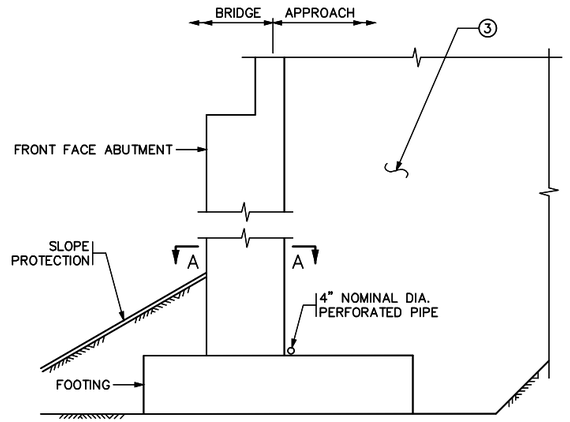

SECTION THROUGH PARAPET ~~AND SEMI-INTEGRAL~~ ABUTMENTS

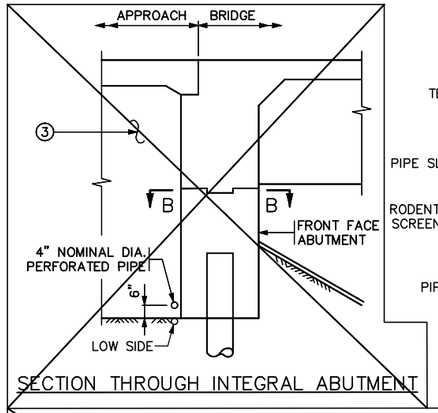

SECTION THROUGH INTEGRAL ABUTMENT

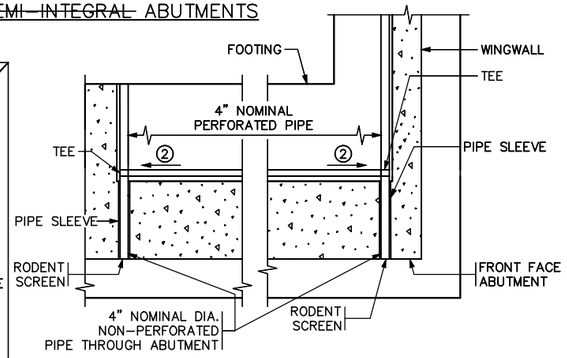

SECTION A–A

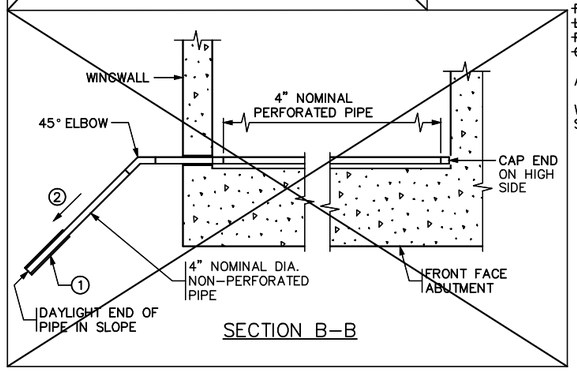

SECTION B–B

NOTES:

~~PAYMENT WILL BE INCLUDED IN THE SINGLE LUMP SUM PRICE FOR "DRAINAGE SYSTEM TYPE (B910)", INCLUDES BUT IS NOT LIMITED TO 4" DIAMETER PERFORATED AND NON-PERFORATED PIPE, ELBOWS, END CAPS, COUPLINGS, SLEEVES AND PRECAST CONCRETE HEADWALLS.~~

ALL PIPE TO COMPLY WITH SPEC. 3245.

WRAP PERFORATED PIPE WITH GEOTEXTILE PER SPEC. 3733, TYPE 1. ATTACH TO PIPE PER SPEC. 2502.

① ~~AT CONTRACTORS OPTION, MAY TIE APPROACH PANEL DRAINAGE SYSTEM AND ABUTMENT DRAINAGE SYSTEM INTO A SINGLE PRECAST CONCRETE HEADWALL OR INTO A CATCH BASIN AS LONG AS A MINIMUM OF 1% POSITIVE SLOPE CAN BE MANTAINED.~~

~~USE PRECAST CONCRETE HEADWALL WITH RODENT SCREEN. SEE STANDARD PLATE 3131 FOR DETAILS.~~

② ⅛" PER FT. MINIMUM SLOPE.

③ REFER TO SHEET 2 FOR ABUTMENT BACKFILL REQUIREMENTS.

APPROVED: JANUARY 13, 2015	STATE OF MINNESOTA DEPARTMENT OF TRANSPORTATION	REVISED	DETAIL NO.
Nancy Daubenberger STATE BRIDGE ENGINEER	DRAINAGE SYSTEM	12–02–2015	B910

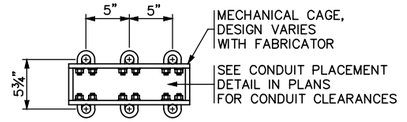

SECTION A–A

ALTERNATE MECHANICAL CAGE

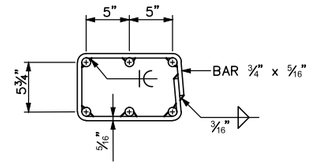

SECTION A–A

ALTERNATE WELDED CAGE

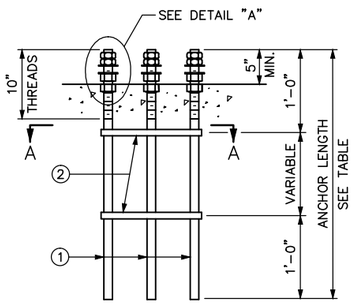

ELEVATION

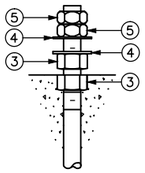

DETAIL "A"

SHEET MODIFICATION:
(A) DENOTES MODIFICATION TO STANDARD SHEET

NOTES:

ALL RODS ARE TO BE 1" NOMINAL DIA. WITH 1 – 8UNC – 2A THREADS. HEAVY HEX NUTS, JAM NUTS, AND FLAT WASHERS PER Mn/DOT SPEC. 3391.2A FOR 1" DIA. THREADED RODS. NUTS TO BE TAPPED 1/64" OVERSIZED PRIOR TO GALVANIZING, AND RETAPPED TO STANDARD SIZE AFTER GALVANIZING.

GALVANIZE THREADED RODS, CAGES, AND NUTS AFTER FABRICATION AS PER Mn/DOT SPEC. 3392.

TOP OF THE LOWER NUTS SHALL BE FLUSH WITH TOP OF CONCRETE RAILING.

SUBSTITUTE MATERIALS PER Mn/DOT SPEC. 1605.

① THREADED RODS, STEEL AS PER Mn/DOT SPEC. 3309, 3310, OR 3385 TYPE B (6 REQUIRED).

② PROVIDE A MECHANICAL OR WELDED CAGE FOR ROD ALIGNMENT. STEEL AS PER Mn/DOT SPEC. 3306 (2 REQUIRED).

③ HEAVY HEX NUTS FOR 1" DIA. RODS (12 REQUIRED).

④ FLAT WASHERS FOR 1" DIA. RODS (12 REQUIRED).

⑤ JAM NUTS FOR 1" DIA. RODS (12 REQUIRED).

	STANDARD RAIL TYPES (SEE PLANS FOR TYPE)	ANCHOR LENGTH
	~~TYPE "F" MEDIAN~~	3'–0"
	~~TYPE "F" W/O CONCRETE WEARING COURSE~~	3'–0"
	~~TYPE "F" W/ CONCRETE WEARING COURSE~~	3'–2"
	~~TYPE "F" WITH SIDEWALK/ BRIDGE SLAB~~	3'–10"
	~~TYPE "F" ON RETAINING WALL~~	3'–0"
	~~CONCRETE PARAPET WITH FENCE~~	2'–8"
(A)	CONCRETE CURB WITH FENCE	

APPROVED: NOVEMBER 22, 2002	STATE OF MINNESOTA DEPARTMENT OF TRANSPORTATION	REVISED	DETAIL NO.
Daniel J. Hagyan STATE BRIDGE ENGINEER	ANCHOR BOLT CLUSTER FOR LIGHT POLES	10–26–2004 03–02–2005	B950

NO.	DATE	BY	CHECK	DESIGN	REVISION / SUBMITTAL

DESIGNED BY: BAW CHECKED BY: BLF
DRAWN BY: LMT CHECKED BY: BLF

AECOM Kimley»Horn

90% SUBMISSION - 01/22/16

METROPOLITAN COUNCIL

SOUTHWEST Green Line LRT Extension

CIVIL - VOLUME 4G
CSAH 40 (GLENWOOD AVENUE) - EAST
BRIDGE 27C17
BRIDGE DETAILS 5

DISCIPLINE: STRUCTURES
SHEET NAME: CBR27C17-BRG-DTL-001-5

SHEET 60 OF 71

Jan. 18 2016 09:28 am V:\3400_ADC\CAD\SEGMENT E4\PLAN SHEETS\STRUCTURES\27C17\CBR27C17-BRG-DTL-001.dwg By: brad.wodash

CONCRETE WEARING COURSE

☐ LOW SLUMP

☐ OTHER _____
TYPE OR MANUFACTURER

EXPANSION JOINTS

JOINT MANUFACTURER

MANUFACTURER'S IDENTIFICATION _____
MFR'S No. AND/OR LETTER DESIGNATION FOR JOINT USED

GLAND MANUFACTURER _____
NAME AND ADDRESS (CITY, STATE)

SIZE OF GLAND _____

MANUFACTURER'S IDENTIFICATION _____
MFR'S No. AND/OR LETTER DESIGNATION FOR GLAND USED

ELASTOMERIC BEARING PADS

PAD MANUFACTURER _____
NAME AND ADDRESS (CITY, STATE)

SPECIAL SURFACE FINISH

SYSTEM: _____ COLOR: _____

FINISHING ROADWAY FACES OF BARRIER RAILING

TYPE: _____ COLOR: _____

ANTI–GRAFFITI COATING

MANUFACTURER _____
NAME AND ADDRESS (CITY, STATE)

PRODUCT NAME: _____ LOCATION: _____

PAINT SYSTEM

Mn/DOT SPECIFICATION NUMBER _____
2478 OR 2479 OR OTHER

MANUFACTURER _____
NAME AND ADDRESS (CITY, STATE)

PRIME COAT _____
Mn/DOT MATERIAL SPECIFICATION NUMBER

INTERMEDIATE COAT _____
Mn/DOT MATERIAL SPECIFICATION NUMBER

FINISH COAT _____ _____
Mn/DOT MATERIAL SPECIFICATION NUMBER COLOR

PLAN QUALITY

RATE 1 (AGREE), 2 (NEUTRAL), OR 3 (DISAGREE, PLEASE COMMENT BELOW)

DIMENSIONING AND DETAILING ADEQUATELY DESCRIBED REQUIRED CONSTRUCTION. _____
BAR LISTS AND QUANTITIES WERE TYPICALLY COMPLETE AND FREE OF ERRORS. _____
SCALE OF DRAWINGS AND OVERALL LEGIBILITY OF LINES AND TEXT WAS GOOD. _____
(SB) SPECIAL PROVISIONS ADEQUATELY DESCRIBED SPECIAL WORK AND PAYMENT. _____

COMMENTS: _____

NUMBER OF BRIDGE
SUPPLEMENTAL AGREEMENTS: _____ COST: $ _____

LIST SIGNIFICANT ERRORS OR OMISSIONS IN PLAN DETAILS OR PAY QUANTITIES IN THE SPACE PROVIDED AT RIGHT.

BRIDGE REMOVAL / BRIDGE OPENING

NUMBER OF AND DATE OLD BRIDGE WAS REMOVED (IF APPLICABLE):

BRIDGE NUMBER _____ DATE REMOVED _____

DATE NEW BRIDGE WAS OPENED TO TRAFFIC _____

NOTIFY THE BRIDGE OFFICE BRIDGE MANAGEMENT UNIT WITH THIS INFORMATION AS SOON AS POSSIBLE. (651) 366–4557

OTHER ITEMS ①

① UTILITIES ADDED DURING CONSTRUCTION AND SPECIALTY ITEMS.

FINAL QUANTITIES ENTERED ON SCHEDULE OF QUANTITIES: YES ☐ NO ☐

SUMMARY OF SIGNIFICANT AS–BUILT CHANGES

THE AS–BUILT INFORMATION WAS ADDED TO THE PLAN BY:

_____ _____
INSPECTOR(S) SIGNATURE DATE

CHECKED BY: _____ _____
PROJECT ENGINEER/SUPERVISOR SIGNATURE DATE

AT THE TIME OF THE FINAL, THIS COMPLETED AS–BUILT BRIDGE DATA SHEET MUST BE SUBMITTED TO THE BRIDGE OFFICE – ATTN: REGIONAL CONSTRUCTION ENGINEER (MS610).

REVISION: 10–28–2008

APPROVED: SEPTEMBER 26, 2003
STATE BRIDGE ENGINEER

AS–BUILT DETAILS
(AS NEEDED)

FIG. 5–397.900

TITLE:	DES:	DR:	APPROVED:	BRIDGE NO.
AS–BUILT BRIDGE DATA	CHK:	CHK:		27C17
	SHEET NO. 61 OF 71 SHEETS			

Jan. 18 2016 09:28 am V:\3400_ADC\CAD\SEGMENT E4\PLAN SHEETS\STRUCTURES\27C17\CBR27C17-BRG-DTL-002.dwg By: brad.wodash

CONTRACTED PROFILE

SCALE HOR: 0 50'

SCALE VER: 0 10'

PROFILE GRADE
CSAH 40 (GLENWOOD AVE)
(CSAH 40 (GLENWOOD AVE))

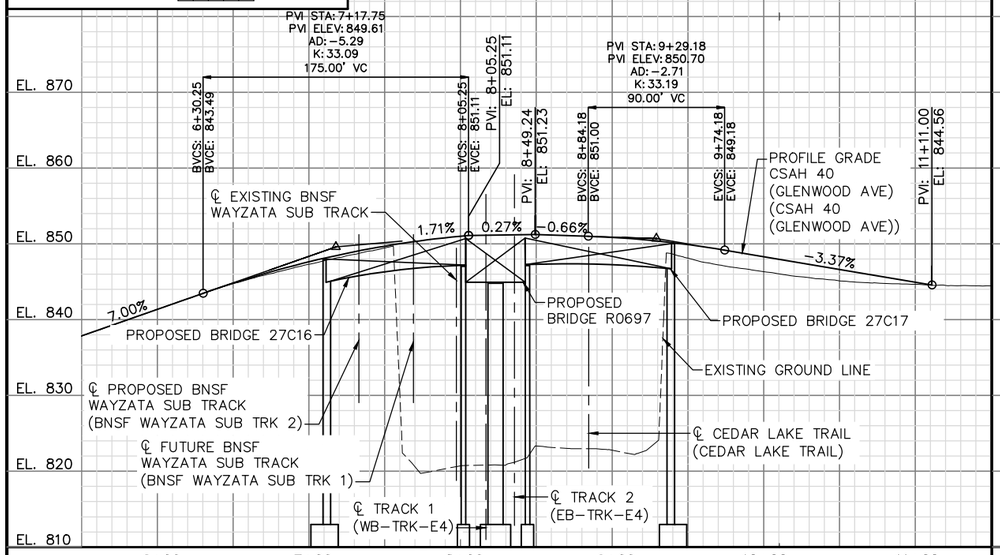

PROFILE GRADE
CEDAR LAKE TRAIL
(CEDAR LAKE TRAIL)

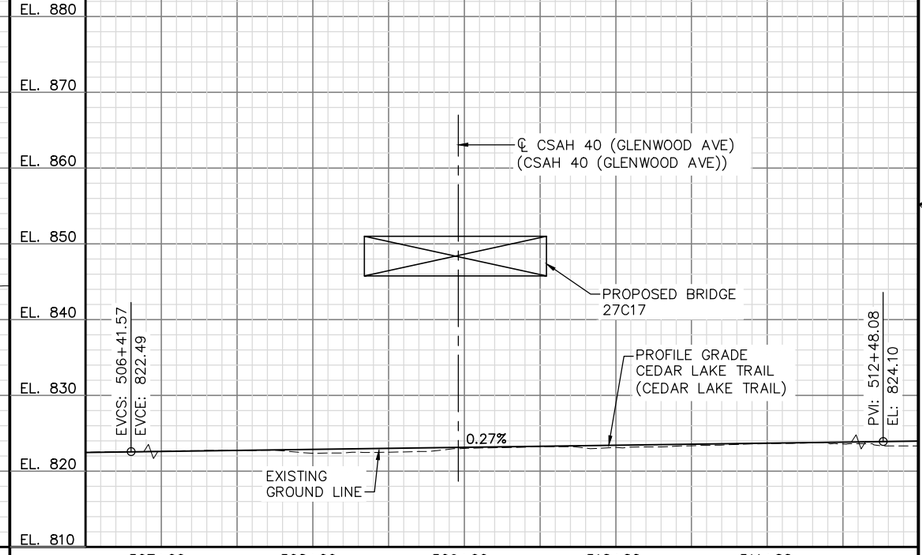

PLAT

SCALE: 0 20' 40'

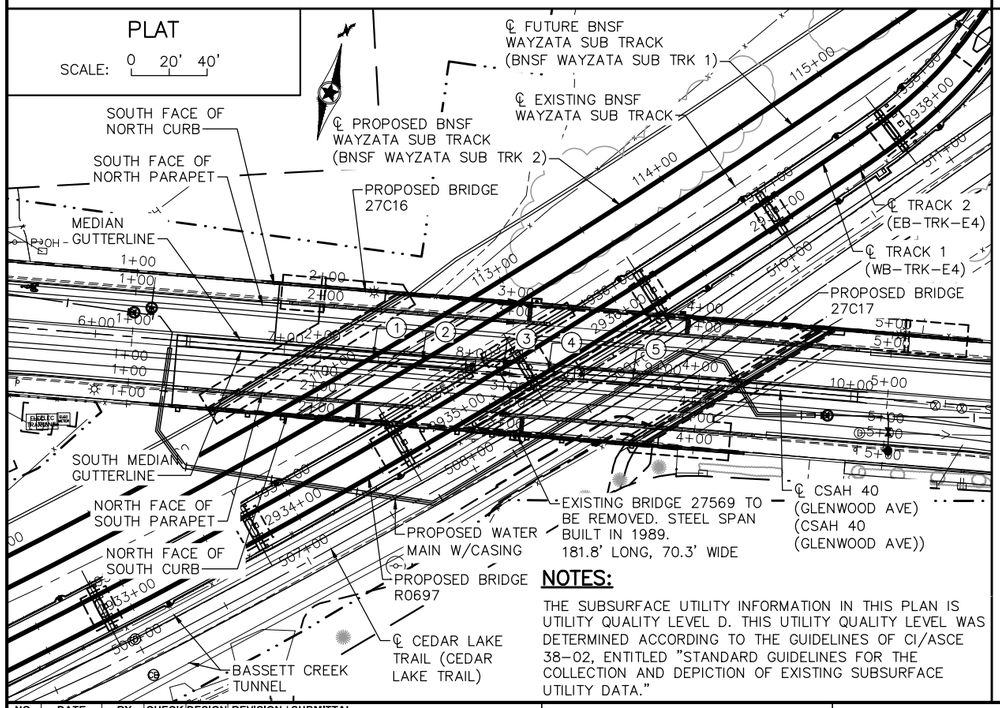

NOTES:

1. ℄ CSAH 40 (GLENWOOD AVE) (CSAH 40 (GLENWOOD AVE)) P.O.T. STA. 7+47.08
   ℄ PROPOSED BNSF WAYZATA SUB TRACK (BNSF WAYZATA SUB TRK 2) P.O.C. STA. 112+21.20
   X = 525722.907 Y = 168541.154
   Δ = 35°02'00.5"
2. ℄ CSAH 40 (GLENWOOD AVE) (CSAH 40 (GLENWOOD AVE)) P.O.T. STA. 7+73.11
   ℄ FUTURE BNSF WAYZATA SUB TRACK (BNSF WAYZATA SUB TRK 1) P.O.C. STA. 112+41.42
   X = 525748.844 Y = 168539.008
   Δ = 35°21'28.2"
3. ℄ CSAH 40 (GLENWOOD AVE) (CSAH 40 (GLENWOOD AVE)) P.O.T. STA. 8+16.03
   ℄ TRACK 1 (WB−TRK−E4) P.O.C. STA. 1935+31.47
   X = 525791.624 Y = 168535.469
   Δ = 35°53'13.5"
4. ℄ CSAH 40 (GLENWOOD AVE) (CSAH 40 (GLENWOOD AVE)) P.O.T. STA. 8+39.83
   ℄ TRACK 2 (EB−TRK−E4) P.O.C. STA. 2935+52.51
   X = 525815.344 Y = 168533.506
   Δ = 36°10'39.1"
5. CONTROL POINT
   ℄ CSAH 40 (GLENWOOD AVE) (CSAH 40 (GLENWOOD AVE)) P.O.T. STA. 8+84.56
   ℄ CEDAR LAKE TRAIL (CEDAR LAKE TRAIL) P.O.C. STA. 508+96.13
   X = 525859.922 Y = 168529.818
   Δ = 36°15'14.0"

TRACK 2 (FG−EB−TRK−E4) CURVE NO. E4−209A	TRACK 1 (FG−WB−TRK−E4) CURVE NO. E4−109A
R = 3804.00'	R = 3790.00'
Lc = 612.52'	Lc = 609.91'
Ls1 = 160.00'	Ls1 = 160.00'
Ls2 = 30.00'	Ls2 = 30.00'
Ea = 0.00"	Ea = 0.00"
Eu = 2.60"−0.10"	Eu = 2.61"−0.10"
V = 50−10 MPH	V = 50−10 MPH

TRACK 2 (FG−EB−TRK−E4) CURVE NO. E4−209B	TRACK 1 (FG−WB−TRK−E4) CURVE NO. E4−109B
R = 244.00'	R = 230.00'
Lc = 360.51'	Lc = 338.11'
Ls = 30.00'	Ls = 30.00'
Ea = 0.00"	Ea = 0.00"
Eu = 1.62"	Eu = 1.72"
V = 10 MPH	V = 10 MPH

NOTES:

THE SUBSURFACE UTILITY INFORMATION IN THIS PLAN IS UTILITY QUALITY LEVEL D. THIS UTILITY QUALITY LEVEL WAS DETERMINED ACCORDING TO THE GUIDELINES OF CI/ASCE 38−02, ENTITLED "STANDARD GUIDELINES FOR THE COLLECTION AND DEPICTION OF EXISTING SUBSURFACE UTILITY DATA."

LOCATION ENGINEER'S OBSERVATIONS AT BRIDGE SITE

1. SPECIAL FEATURES: WATERFALLS, DAMS, FLOODS, ICE, DEBRIS SLIDING BANKS, RECREATIONAL BOATING.
2. OTHER BRIDGES OR CULVERTS OVER THE SAME STREAM (PARTICULARY STRUCTURES WHICH CARRY HIGH WATER WITHOUT OVERFLOW OF ROADWAY): GIVEN LOCATION, TYPE, LENGTH, HEIGHT ABOVE HIGH WATER, CROSS−SECTIONAL AREA ETC.
3. APPARENT HIGHWATER ELEVATION OBTAINED FROM:
4. OTHER DATA: APPROX. VELOCITY OF WATER AT TIME OF SURVEY.

HYDRAULIC ENGINEER'S RECOMMENDATION

DATE:

STREAM OR DITCH DESIGNATION:

DRAINAGE AREA: SQ. MI.

MAX FLOOD ON RECORD:

DESIGN FLOOD (YR. FREQ.): C.F.S.
HEADWATER ELEVATION: FT.
DESIGN MEAN VELOCITY THROUGH STRUCTURE F.P.S.
TOTAL STAGE INCREASE FT.
LOW MEMBER AT OR ABOVE ELEVATION FT.

WATERWAY AREA REQUIRED BELOW ELEV. = SQ. FT.
AT RIGHT ANGLES TO CHANNEL

BASIC FLOOD (YR. FREQ.) C.F.S.
HEADWATER ELEVATION: FT.
TOTAL STAGE INCREASE FT.
MEAN VELOCITY THROUGH STRUCTURE F.P.S.

FLOWLINE ELEVATION: FT. SKEW ANGLE:

ESTIMATED PRELIMINARY TOTAL SCOUR AT PIER EL. (500 YR. FREQ.)

SCOUR CONFIRMATION RECOMMENDATION

DATE:

TOTAL SCOUR AT PIER EL. (500 OR QT YR. FREQ.)
SCOUR CODE: OBTAIN FROM HYDRAULIC ENGINEER

BRIDGE SURVEY SHEETS MADE FROM 2014 MFRA SURVEYS

1ST BENCH MARK (NAVD 88)
BENCHMARK ID PT. 163
ELEVATION = 822.94
N = 168527.62, E = 525863.31
DESCRIPTION = MAG NAIL IN BIT. PATH

2ND BENCH MARK (NAVD 88)
BENCHMARK ID PT. 162
ELEVATION = 822.47
N = 168430.42, E = 525688.95
DESCRIPTION = MAG NAIL IN BIT. PATH

INDEX MAP

PROPOSED BRIDGE 27C17

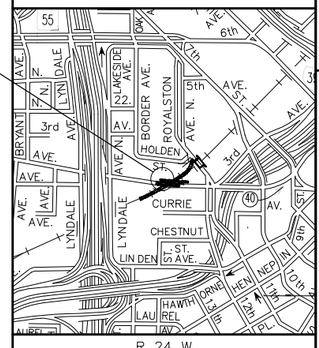

T 29 N

R 24 W

BRIDGE SURVEY 1

PROPOSED BRIDGE LOCATED:
0.2 MILES EAST OF JCT. CSAH 40
(GLENWOOD AVENUE) AND INTERSTATE 94

SEC 22 T 29 N R 24 W

CITY OF MINNEAPOLIS HENNEPIN COUNTY

BRIDGE NO. 27C17

NO.	DATE	BY	CHECK	DESIGN	REVISION / SUBMITTAL

DESIGNED BY: BAW CHECKED BY: BLF
DRAWN BY: LMT CHECKED BY: BLF

AECOM Kimley»Horn

90% SUBMISSION - 01/22/16

METROPOLITAN COUNCIL

SOUTHWEST Green Line LRT Extension

CIVIL - VOLUME 4G
CSAH 40 (GLENWOOD AVENUE) - EAST
BRIDGE 27C17
BRIDGE SURVEY 1

DISCIPLINE: STRUCTURES

SHEET NAME: CBR27C17-BRG-SUR-001-1

SHEET 62 OF 71

Jan, 18 2016 09:29 am V:\3400_ADC\CAD\SEGMENT E4\PLAN SHEETS\STRUCTURES\27C17\CBR27C17-BRG-SUR-001.dwg By: brad.wodash

CONTRACTED PROFILE

SCALE HOR: 0 50'

SCALE VER: 0 10'

PROFILE GRADE @ SOUTH FACE OF NORTH CURB

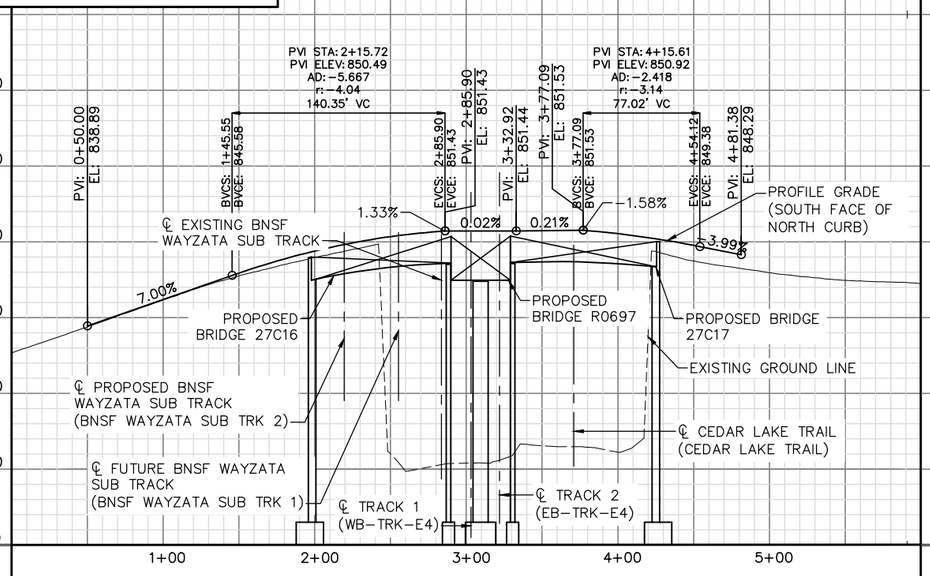

PROFILE GRADE @ SOUTH FACE OF NORTH PARAPET

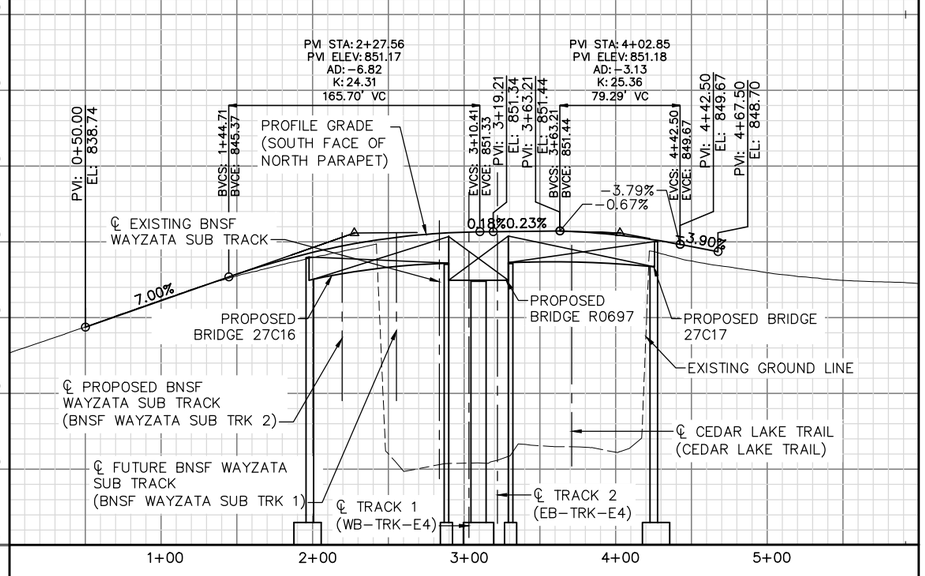

PROFILE GRADE @ NORTH MEDIAN GUTTERLINE

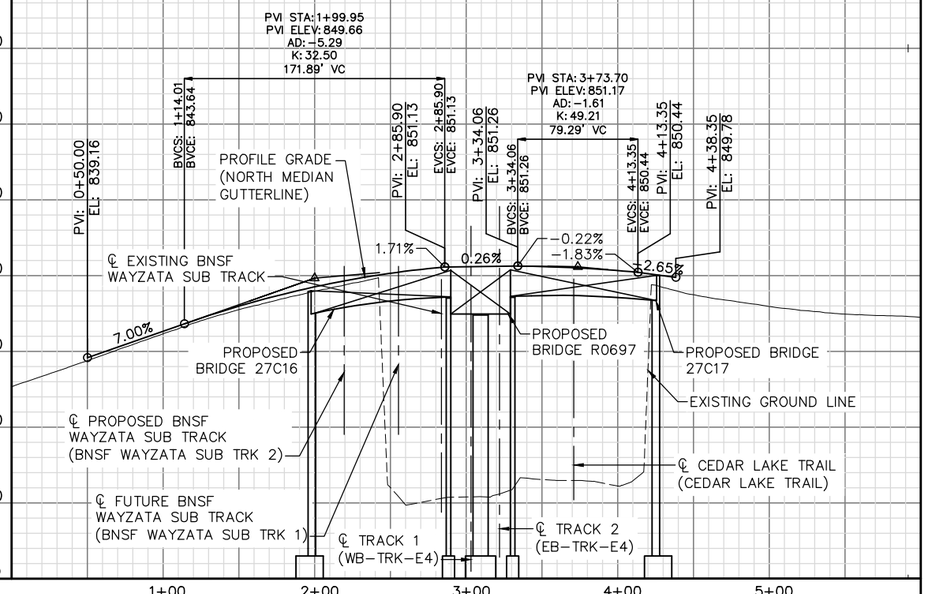

NOTES:

℄ CSAH 40 (GLENWOOD AVE) (CSAH 40 (GLENWOOD AVE)) STA. 5+69.35 = SOUTH FACE OF NORTH CURB STA. 0+50.00.

℄ CSAH 40 (GLENWOOD AVE) (CSAH 40 (GLENWOOD AVE)) STA. 5+69.35 = SOUTH FACE OF NORTH PARAPET STA. 0+50.00.

℄ CSAH 40 (GLENWOOD AVE) (CSAH 40 (GLENWOOD AVE)) STA. 5+69.35 = NORTH MEDIAN GUTTERLINE STA. 0+50.00.

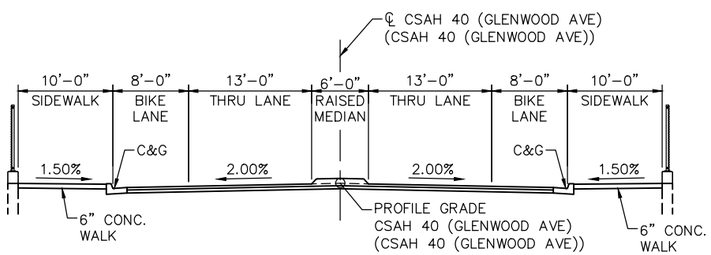

TYPICAL SECTION

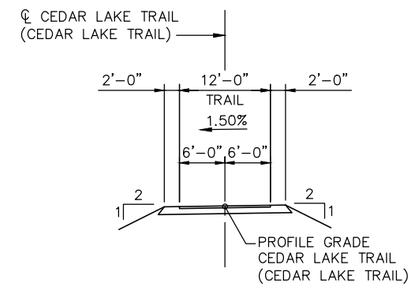

PROPOSED TYPICAL CEDAR LAKE TRAIL SECTION

NO.	DATE	BY	CHECK	DESIGN	REVISION / SUBMITTAL

DESIGNED BY: BAW CHECKED BY: BLF

DRAWN BY: LMT CHECKED BY: BLF

AECOM Kimley»Horn

90% SUBMISSION - 01/22/16

METROPOLITAN COUNCIL

SOUTHWEST Green Line LRT Extension

CIVIL - VOLUME 4G
CSAH 40 (GLENWOOD AVENUE) - EAST
BRIDGE 27C17
BRIDGE SURVEY 2

DISCIPLINE: STRUCTURES

SHEET NAME: CBR27C17-BRG-SUR-001-2

SHEET 63 OF 71

Jan, 18 2016 09:30 am V:\3400_ADC\CAD\SEGMENT E4\PLAN SHEETS\STRUCTURES\27C17\CBR27C17-BRG-SUR-001.dwg By: brad.wodash

CONTRACTED PROFILE

SCALE HOR: 0 50'

SCALE VER: 0 10'

PROFILE GRADE @ NORTH FACE OF SOUTH CURB

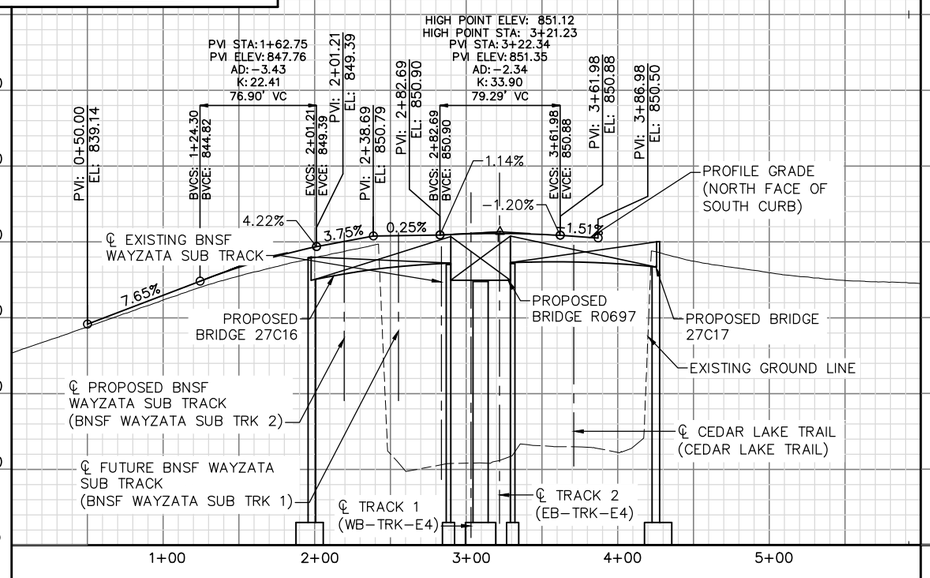

PROFILE GRADE @ NORTH FACE OF SOUTH PARAPET

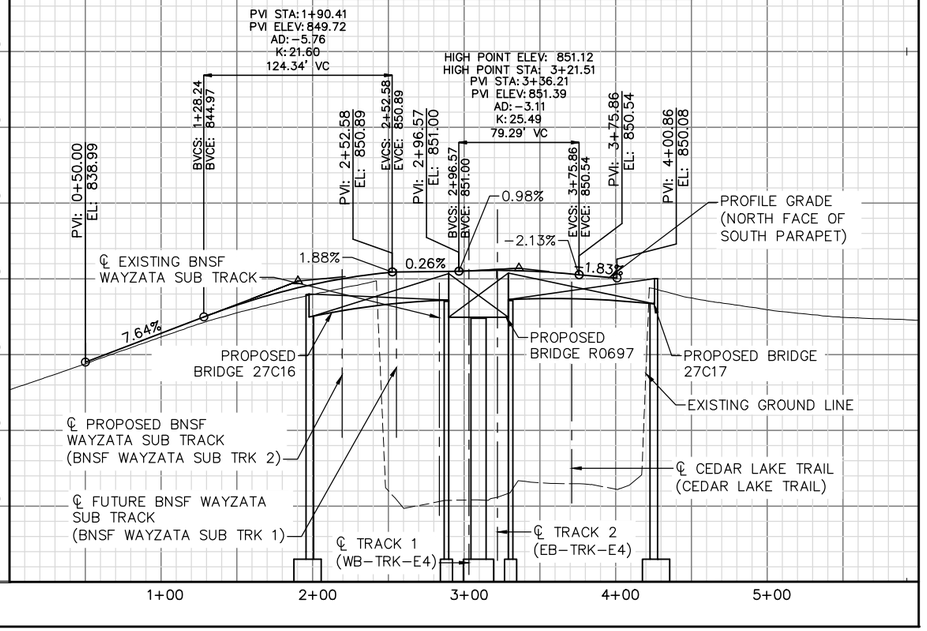

PROFILE GRADE @ SOUTH MEDIAN GUTTERLINE

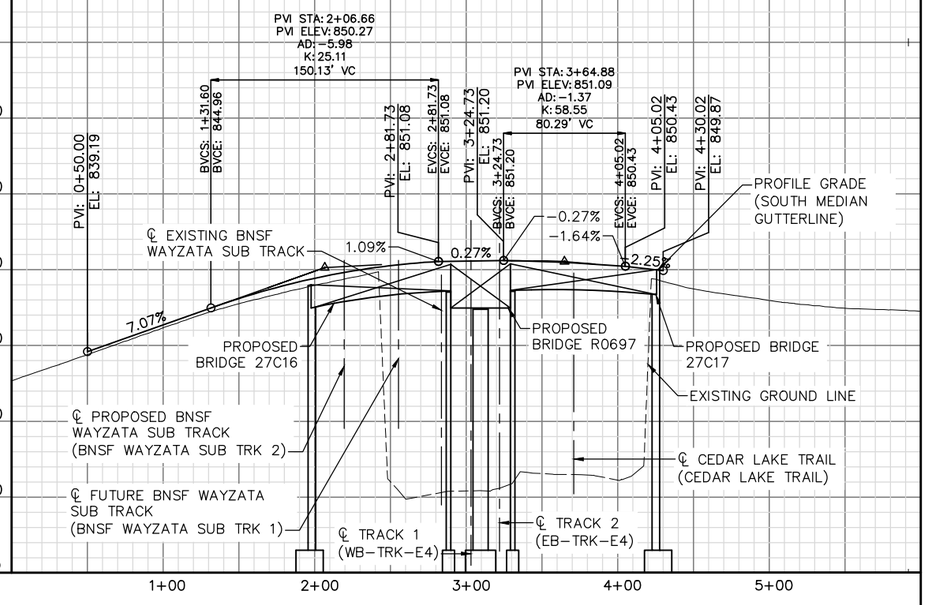

NOTES:

℄ CSAH 40 (GLENWOOD AVE) (CSAH 40 (GLENWOOD AVE)) STA. 5+69.35 = NORTH FACE OF SOUTH CURB STA. 0+50.00

℄ CSAH 40 (GLENWOOD AVE) (CSAH 40 (GLENWOOD AVE)) STA. 5+69.35 = NORTH FACE OF SOUTH PARAPET STA. 0+50.00.

℄ CSAH 40 (GLENWOOD AVE) (CSAH 40 (GLENWOOD AVE)) STA. 5+69.35 = SOUTH MEDIAN GUTTERLINE STA. 0+50.00

NO.	DATE	BY	CHECK	DESIGN	REVISION / SUBMITTAL

DESIGNED BY: BAW CHECKED BY: BLF

DRAWN BY: LMT CHECKED BY: BLF

AECOM Kimley»Horn

90% SUBMISSION - 01/22/16

METROPOLITAN COUNCIL

SOUTHWEST Green Line LRT Extension

CIVIL - VOLUME 4G
CSAH 40 (GLENWOOD AVENUE) - EAST
BRIDGE 27C17
BRIDGE SURVEY 3

DISCIPLINE: STRUCTURES

SHEET NAME: CBR27C17-BRG-SUR-001-3

SHEET 64 OF 71

Jan, 18 2016 09:30 am V:\3400_ADC\CAD\SEGMENT E4\PLAN SHEETS\STRUCTURES\27C17\CBR27C17-BRG-SUR-001.dwg By: brad.wodash

℄ TRACK 1
(WB–TRK–E4)

℄ TRACK 2
(EB–TRK–E4)

℄ CSAH 40 (GLENWOOD AVE)
(CSAH 40 (GLENWOOD AVE))

1158 SB
STA. 6+93.69
21' RT. OF ℄ CSAH 40
(GLENWOOD AVE)

1021 SB
STA. 9+92.18
22' LT. OF ℄ CSAH 40
(GLENWOOD AVE)

TEST PILE NO. 1

TEST PILE NO. 2

TEST PILE NO. 3

TEST PILE NO. 4

TEST PILE NO. 5

TEST PILE NO. 6

℄ PROPOSED BNSF
WAYZATA SUB TRACK
(BNSF WAYZATA SUB TRK 2)

℄ FUTURE BNSF
WAYZATA SUB TRACK
(BNSF WAYZATA SUB TRK 1)

℄ EXISTING BNSF
WAYZATA SUB TRACK

℄ BRG. &
℄ E. PIER

℄ BRG.
E. ABUT.

1159 SB
STA. 9+41.50
21' RT. OF ℄ CSAH 40
(GLENWOOD AVE)

PROPOSED WATER
MAIN W/CASING

1136 SW
STA. 7+10.43
78' RT. OF ℄ CSAH 40
(GLENWOOD AVE)

BASSETT CREEK
TUNNEL

℄ CEDAR LAKE TRAIL
(CEDAR LAKE TRAIL)

NOTES:

WATER MAIN TO BE RELOCATED AS SHOWN, CONTRACTOR TO FIELD LOCATE BURIED UTILITIES PRIOR TO CONSTRUCTION.

THE SUBSURFACE UTILITY INFORMATION IN THIS PLAN IS UTILITY QUALITY LEVEL D. THIS UTILITY QUALITY LEVEL WAS DETERMINED ACCORDING TO THE GUIDELINES OF CI/ASCE 38–02, ENTITLED "STANDARD GUIDELINES FOR THE COLLECTION AND DEPICTION OF EXISTING SUBSURFACE UTILITY DATA."

SEE SHEET 68 FOR UTILITY NOTES.

NO.	DATE	BY	CHECK	DESIGN	REVISION / SUBMITTAL

DESIGNED BY: BAW CHECKED BY: BLF
DRAWN BY: LMT CHECKED BY: BLF

AECOM Kimley»Horn

90% SUBMISSION - 01/22/16

METROPOLITAN COUNCIL

SOUTHWEST Green Line LRT Extension

CIVIL - VOLUME 4G
CSAH 40 (GLENWOOD AVENUE) - EAST
BRIDGE 27C17
BRIDGE SURVEY PLAN

DISCIPLINE: STRUCTURES

SHEET NAME: CBR27C17-BRG-BOR-001-1

Jan, 18 2016 09:31 am V:\3400_ADC\CAD\SEGMENT E4\PLAN SHEETS\STRUCTURES\27C17\CBR27C17-BRG-BOR-001.dwg By: brad.wodash

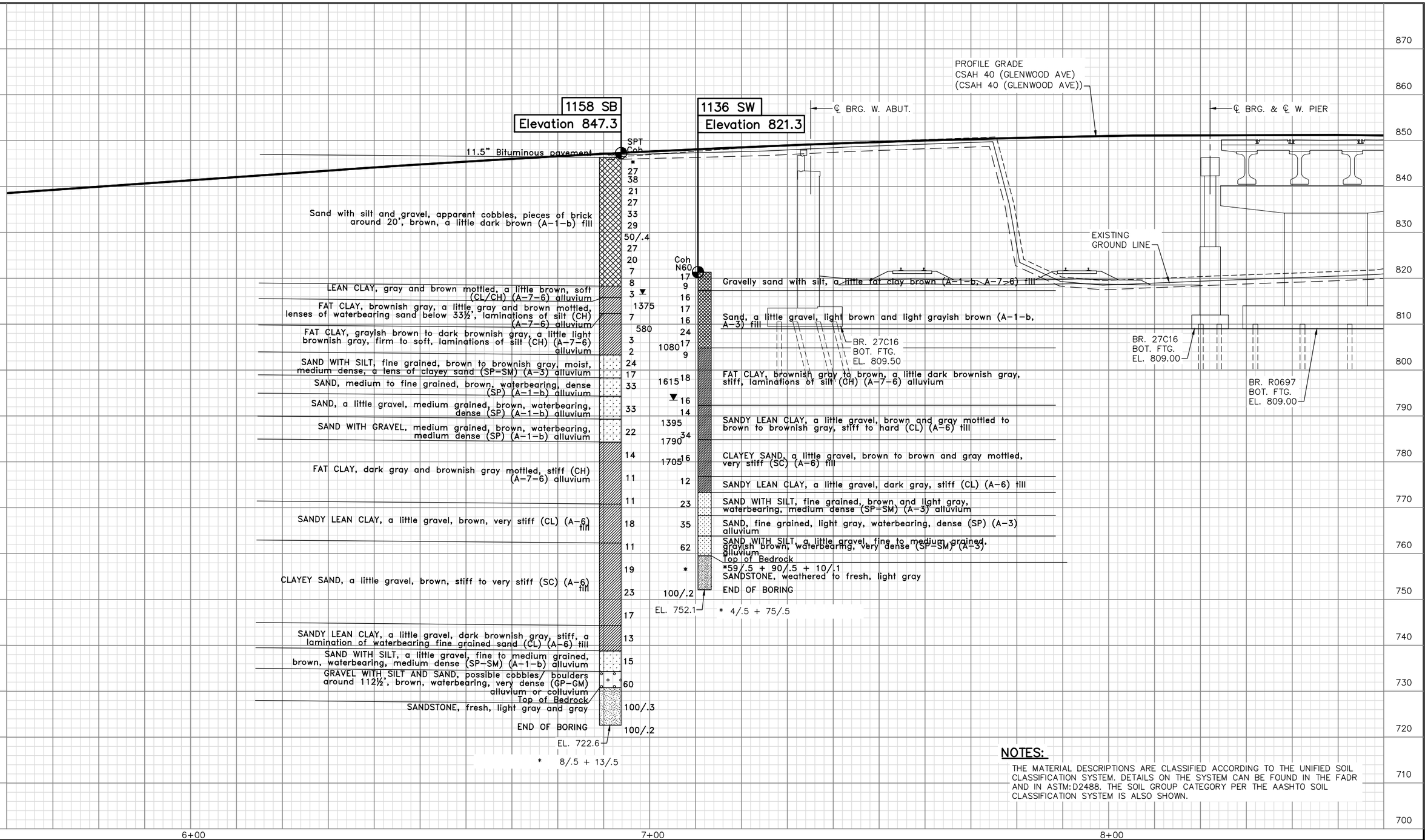

NOTES:

THE MATERIAL DESCRIPTIONS ARE CLASSIFIED ACCORDING TO THE UNIFIED SOIL CLASSIFICATION SYSTEM. DETAILS ON THE SYSTEM CAN BE FOUND IN THE FADR AND IN ASTM:D2488. THE SOIL GROUP CATEGORY PER THE AASHTO SOIL CLASSIFICATION SYSTEM IS ALSO SHOWN.

NO.	DATE	BY	CHECK	DESIGN	REVISION / SUBMITTAL

DESIGNED BY: BAW | CHECKED BY: BLF
DRAWN BY: LMT | CHECKED BY: BLF

AECOM Kimley»Horn

90% SUBMISSION - 01/22/16

METROPOLITAN COUNCIL

SOUTHWEST Green Line LRT Extension

CIVIL - VOLUME 4G
CSAH 40 (GLENWOOD AVENUE) - EAST
BRIDGE 27C17
BRIDGE SURVEY PROFILE 1

DISCIPLINE: STRUCTURES

SHEET NAME: CBR27C17-BRG-BOR-002-1

SHEET 66 OF 71

Jan, 18 2016 09:33 am V:\3400_ADC\CAD\SEGMENT E4\PLAN SHEETS\STRUCTURES\27C17\CBR27C17-BRG-BOR-002.dwg By: brad.wodash

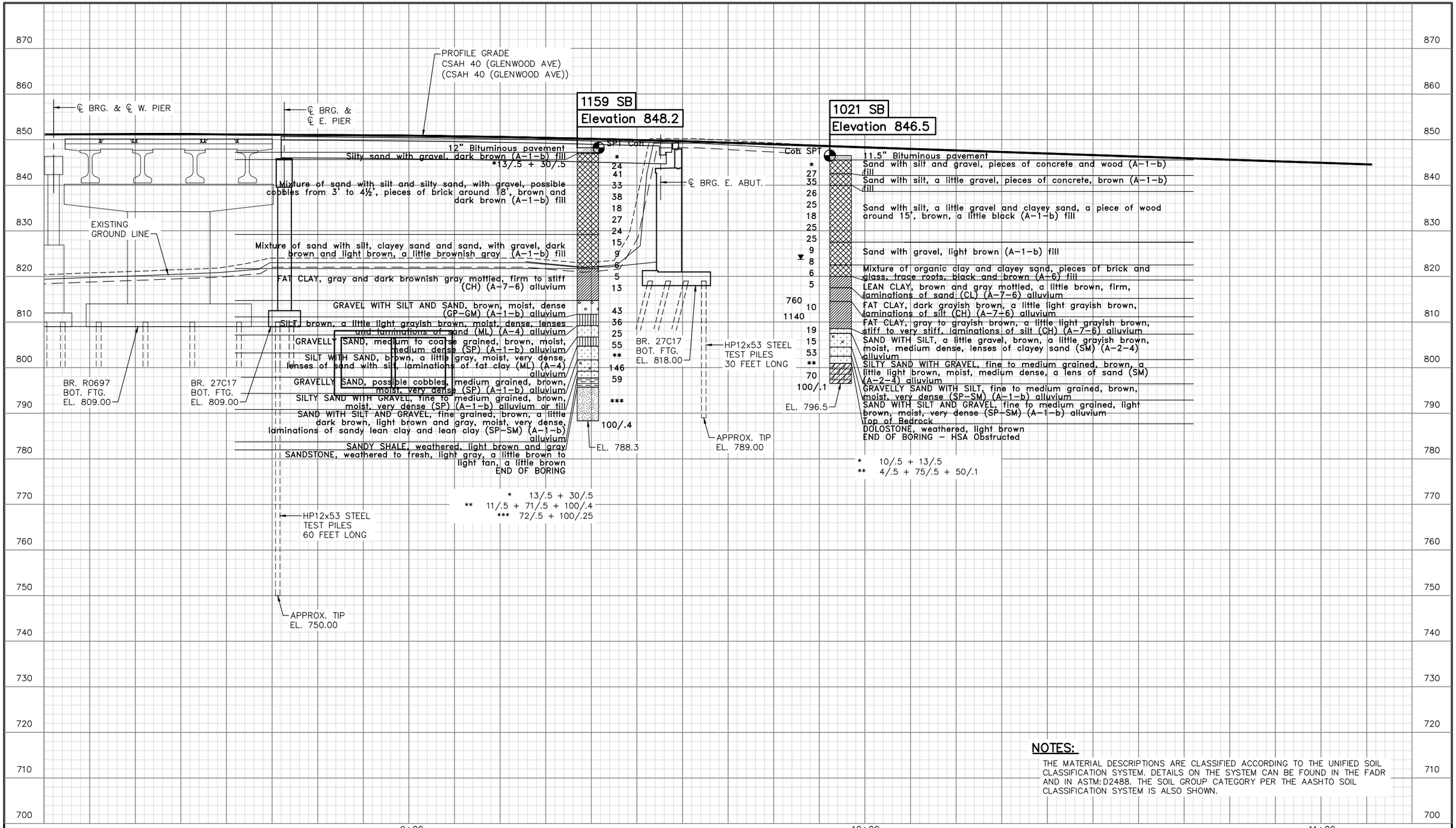

NOTES:

THE MATERIAL DESCRIPTIONS ARE CLASSIFIED ACCORDING TO THE UNIFIED SOIL CLASSIFICATION SYSTEM. DETAILS ON THE SYSTEM CAN BE FOUND IN THE FADR AND IN ASTM:D2488. THE SOIL GROUP CATEGORY PER THE AASHTO SOIL CLASSIFICATION SYSTEM IS ALSO SHOWN.

NO.	DATE	BY	CHECK	DESIGN	REVISION / SUBMITTAL

DESIGNED BY: BAW CHECKED BY: BLF
DRAWN BY: LMT CHECKED BY: BLF

AECOM Kimley»Horn

90% SUBMISSION - 01/22/16

METROPOLITAN COUNCIL

SOUTHWEST Green Line LRT Extension

CIVIL - VOLUME 4G
CSAH 40 (GLENWOOD AVENUE) - EAST
BRIDGE 27C17
BRIDGE SURVEY PROFILE 2

DISCIPLINE: STRUCTURES
SHEET NAME: CBR27C17-BRG-BOR-002-2

SHEET 67 OF 71

Jan, 18 2016 09:33 am V:\3400_ADC\CAD\SEGMENT E4\PLAN SHEETS\STRUCTURES\27C17\CBR27C17-BRG-BOR-002.dwg By: brad.wodash

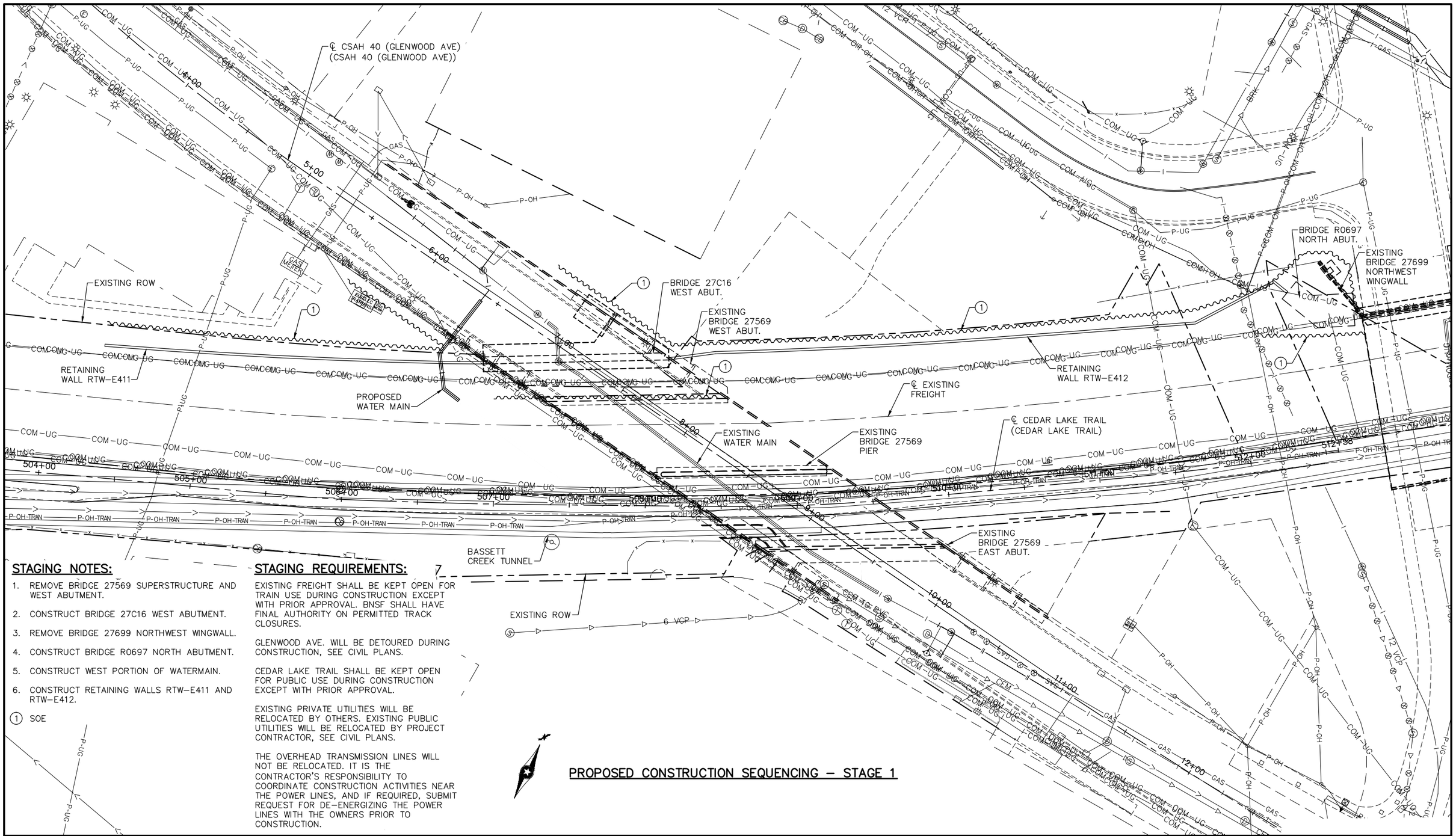

STAGING NOTES:

1. REMOVE BRIDGE 27569 SUPERSTRUCTURE AND WEST ABUTMENT.
2. CONSTRUCT BRIDGE 27C16 WEST ABUTMENT.
3. REMOVE BRIDGE 27699 NORTHWEST WINGWALL.
4. CONSTRUCT BRIDGE R0697 NORTH ABUTMENT.
5. CONSTRUCT WEST PORTION OF WATERMAIN.
6. CONSTRUCT RETAINING WALLS RTW–E411 AND RTW–E412.

(1) SOE

STAGING REQUIREMENTS:

EXISTING FREIGHT SHALL BE KEPT OPEN FOR TRAIN USE DURING CONSTRUCTION EXCEPT WITH PRIOR APPROVAL. BNSF SHALL HAVE FINAL AUTHORITY ON PERMITTED TRACK CLOSURES.

GLENWOOD AVE. WILL BE DETOURED DURING CONSTRUCTION, SEE CIVIL PLANS.

CEDAR LAKE TRAIL SHALL BE KEPT OPEN FOR PUBLIC USE DURING CONSTRUCTION EXCEPT WITH PRIOR APPROVAL.

EXISTING PRIVATE UTILITIES WILL BE RELOCATED BY OTHERS. EXISTING PUBLIC UTILITIES WILL BE RELOCATED BY PROJECT CONTRACTOR, SEE CIVIL PLANS.

THE OVERHEAD TRANSMISSION LINES WILL NOT BE RELOCATED. IT IS THE CONTRACTOR'S RESPONSIBILITY TO COORDINATE CONSTRUCTION ACTIVITIES NEAR THE POWER LINES, AND IF REQUIRED, SUBMIT REQUEST FOR DE–ENERGIZING THE POWER LINES WITH THE OWNERS PRIOR TO CONSTRUCTION.

PROPOSED CONSTRUCTION SEQUENCING – STAGE 1

NO.	DATE	BY	CHECK	DESIGN	REVISION / SUBMITTAL

DESIGNED BY: KAE | CHECKED BY: EJT
DRAWN BY: LMT | CHECKED BY: BLF

AECOM Kimley»Horn

90% SUBMISSION - 01/22/16

METROPOLITAN COUNCIL

SOUTHWEST Green Line LRT Extension

CIVIL - VOLUME 4G
CSAH 40 (GLENWOOD AVENUE) - EAST
BRIDGE 27C17
STAGING PLAN 1

DISCIPLINE: STRUCTURES

SHEET NAME: CBR27C17-BRG-STG-001-1

SHEET 68 OF 71

Jan. 18 2016 09:34 am V:\3400_ADC\CAD\SEGMENT E4\PLAN SHEETS\STRUCTURES\27C17\CBR27C17-BRG-STG-001.dwg By: brad.wodash

℄ CSAH 40 (GLENWOOD AVE)
(CSAH 40 (GLENWOOD AVE))

℄ PROPOSED BNSF
WAYZATA SUB TRACK
(BNSF WAYZATA SUB TRK 2)

RETAINING
WALL RTW–E411

RETAINING
WALL RTW–E405

RETAINING
WALL RTW–E407

RETAINING
WALL RTW–E412

EXISTING ROW

BRIDGE 27C16
WEST ABUT.

BRIDGE 27C16
WEST PIER

BRIDGE R0697
SOUTH ABUT.

BRIDGE R0697
NORTH ABUT.

BRIDGE R0697
PIER 1

BRIDGE R0697
PIER 2

BRIDGE R0697
PIER 3

BRIDGE R0697
PIER 4

BRIDGE R0697
PIER 5

BRIDGE R0697
PIER 6

BRIDGE R0697
PIER 7

BRIDGE R0697
PIER 8

BRIDGE R0697
PIER 9

EXISTING
BRIDGE 27699

℄ CEDAR LAKE TRAIL
(CEDAR LAKE TRAIL)

BASSETT
CREEK TUNNEL

BRIDGE 27C17
EAST PIER

PROPOSED
WATER MAIN

EXISTING ROW

BRIDGE 27C17
EAST ABUT.

STAGING NOTES:

1. RELOCATE EXISTING BNSF TRACK TO FINAL ALIGNMENT.
2. REMOVE BRIDGE 27569 REMAINING SUBSTRUCTURES.
3. CONSTRUCT BRIDGE R0697 SOUTH ABUTMENT AND PIERS 1–9.
4. CONSTRUCT BRIDGE 27C16 AND BRIDGE 27C17 PIERS AND BRIDGE 27C17 EAST ABUTMENT.
5. CONSTRUCT REMAINING PORTION OF WATER MAIN.
6. CONSTRUCT RETAINING WALLS RTW–E405 AND RTW–E407.

(1) SOE

STAGING REQUIREMENTS:

EXISTING FREIGHT SHALL BE KEPT OPEN FOR TRAIN USE DURING CONSTRUCTION EXCEPT WITH PRIOR APPROVAL. BNSF SHALL HAVE FINAL AUTHORITY ON PERMITTED TRACK CLOSURES.

GLENWOOD AVE. WILL BE DETOURED DURING CONSTRUCTION, SEE CIVIL PLANS.

CEDAR LAKE TRAIL SHALL BE KEPT OPEN FOR PUBLIC USE DURING CONSTRUCTION EXCEPT WITH PRIOR APPROVAL.

EXISTING PRIVATE UTILITIES WILL BE RELOCATED BY OTHERS. EXISTING PUBLIC UTILITIES WILL BE RELOCATED BY PROJECT CONTRACTOR, SEE CIVIL PLANS.

THE OVERHEAD TRANSMISSION LINES WILL NOT BE RELOCATED. IT IS THE CONTRACTOR'S RESPONSIBILITY TO COORDINATE CONSTRUCTION ACTIVITIES NEAR THE POWER LINES, AND IF REQUIRED, SUBMIT REQUEST FOR DE–ENERGIZING THE POWER LINES WITH THE OWNERS PRIOR TO CONSTRUCTION.

PROPOSED CONSTRUCTION SEQUENCING – STAGE 2

NO.	DATE	BY	CHECK	DESIGN	REVISION / SUBMITTAL

DESIGNED BY: KAE | CHECKED BY: EJT
DRAWN BY: LMT | CHECKED BY: BLF

AECOM Kimley»Horn

90% SUBMISSION - 01/22/16

METROPOLITAN COUNCIL

SOUTHWEST Green Line LRT Extension

CIVIL - VOLUME 4G
CSAH 40 (GLENWOOD AVENUE) - EAST
BRIDGE 27C17
STAGING PLAN 2

DISCIPLINE: STRUCTURES

SHEET NAME: CBR27C17-BRG-STG-001-2

SHEET 69 OF 71

Jan, 18 2016 09:34 am V:\3400_ADC\CAD\SEGMENT E4\PLAN SHEETS\STRUCTURES\27C17\CBR27C17-BRG-STG-001.dwg By: brad.wodash

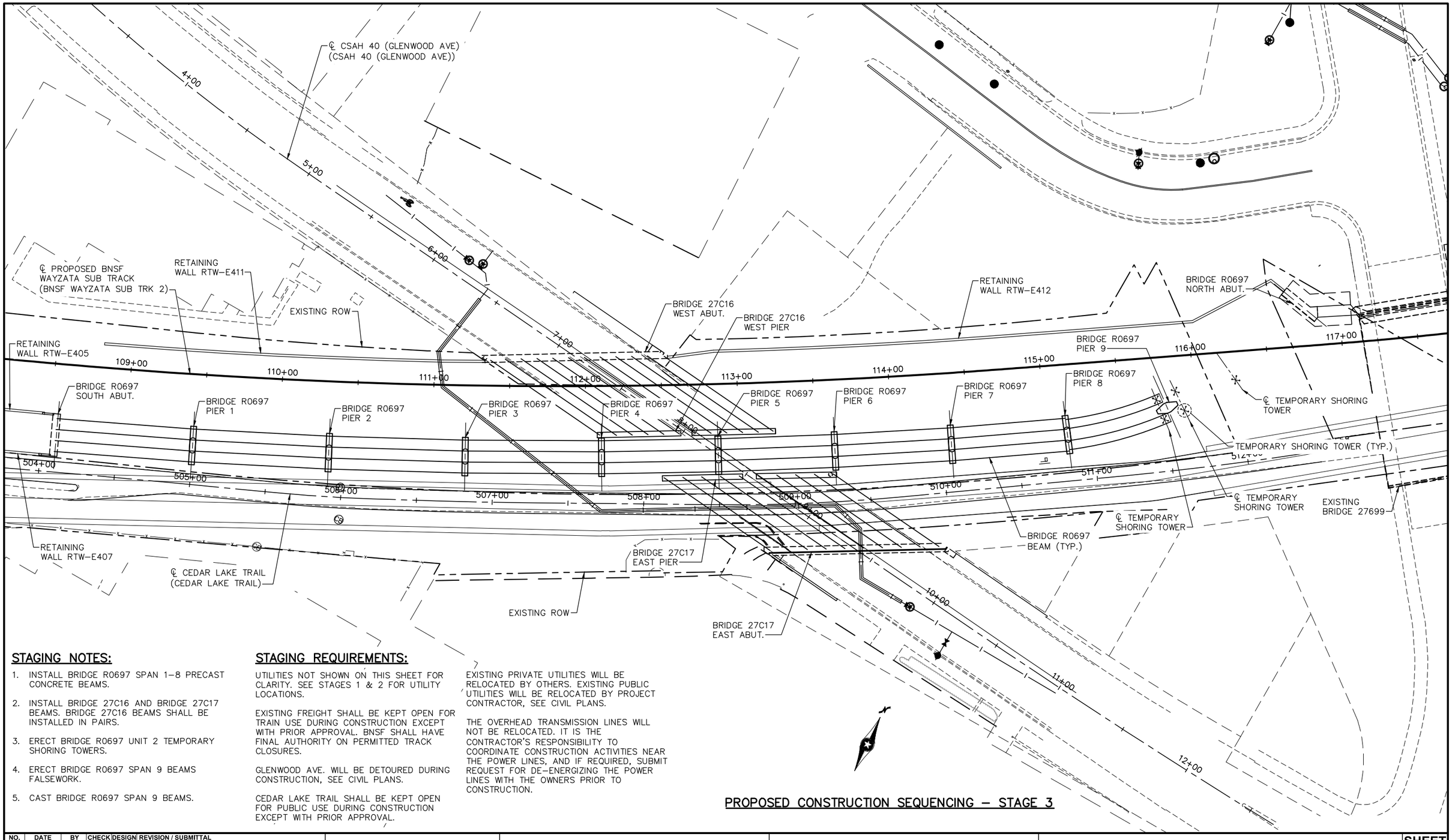

STAGING NOTES:

1. INSTALL BRIDGE R0697 SPAN 1–8 PRECAST CONCRETE BEAMS.
2. INSTALL BRIDGE 27C16 AND BRIDGE 27C17 BEAMS. BRIDGE 27C16 BEAMS SHALL BE INSTALLED IN PAIRS.
3. ERECT BRIDGE R0697 UNIT 2 TEMPORARY SHORING TOWERS.
4. ERECT BRIDGE R0697 SPAN 9 BEAMS FALSEWORK.
5. CAST BRIDGE R0697 SPAN 9 BEAMS.

STAGING REQUIREMENTS:

UTILITIES NOT SHOWN ON THIS SHEET FOR CLARITY. SEE STAGES 1 & 2 FOR UTILITY LOCATIONS.

EXISTING FREIGHT SHALL BE KEPT OPEN FOR TRAIN USE DURING CONSTRUCTION EXCEPT WITH PRIOR APPROVAL. BNSF SHALL HAVE FINAL AUTHORITY ON PERMITTED TRACK CLOSURES.

GLENWOOD AVE. WILL BE DETOURED DURING CONSTRUCTION, SEE CIVIL PLANS.

CEDAR LAKE TRAIL SHALL BE KEPT OPEN FOR PUBLIC USE DURING CONSTRUCTION EXCEPT WITH PRIOR APPROVAL.

EXISTING PRIVATE UTILITIES WILL BE RELOCATED BY OTHERS. EXISTING PUBLIC UTILITIES WILL BE RELOCATED BY PROJECT CONTRACTOR, SEE CIVIL PLANS.

THE OVERHEAD TRANSMISSION LINES WILL NOT BE RELOCATED. IT IS THE CONTRACTOR'S RESPONSIBILITY TO COORDINATE CONSTRUCTION ACTIVITIES NEAR THE POWER LINES, AND IF REQUIRED, SUBMIT REQUEST FOR DE–ENERGIZING THE POWER LINES WITH THE OWNERS PRIOR TO CONSTRUCTION.

PROPOSED CONSTRUCTION SEQUENCING – STAGE 3

NO.	DATE	BY	CHECK	DESIGN	REVISION / SUBMITTAL

DESIGNED BY: KAE | CHECKED BY: EJT
DRAWN BY: LMT | CHECKED BY: BLF

AECOM Kimley»Horn

90% SUBMISSION - 01/22/16

METROPOLITAN COUNCIL

SOUTHWEST Green Line LRT Extension

CIVIL - VOLUME 4G
CSAH 40 (GLENWOOD AVENUE) - EAST
BRIDGE 27C17
STAGING PLAN 3

DISCIPLINE: STRUCTURES

SHEET NAME: CBR27C17-BRG-STG-001-3

SHEET 70 OF 71

Jan. 18 2016 09:34 am V:\3400_ADC\CAD\SEGMENT E4\PLAN SHEETS\STRUCTURES\27C17\CBR27C17-BRG-STG-001.dwg By: brad.wodash

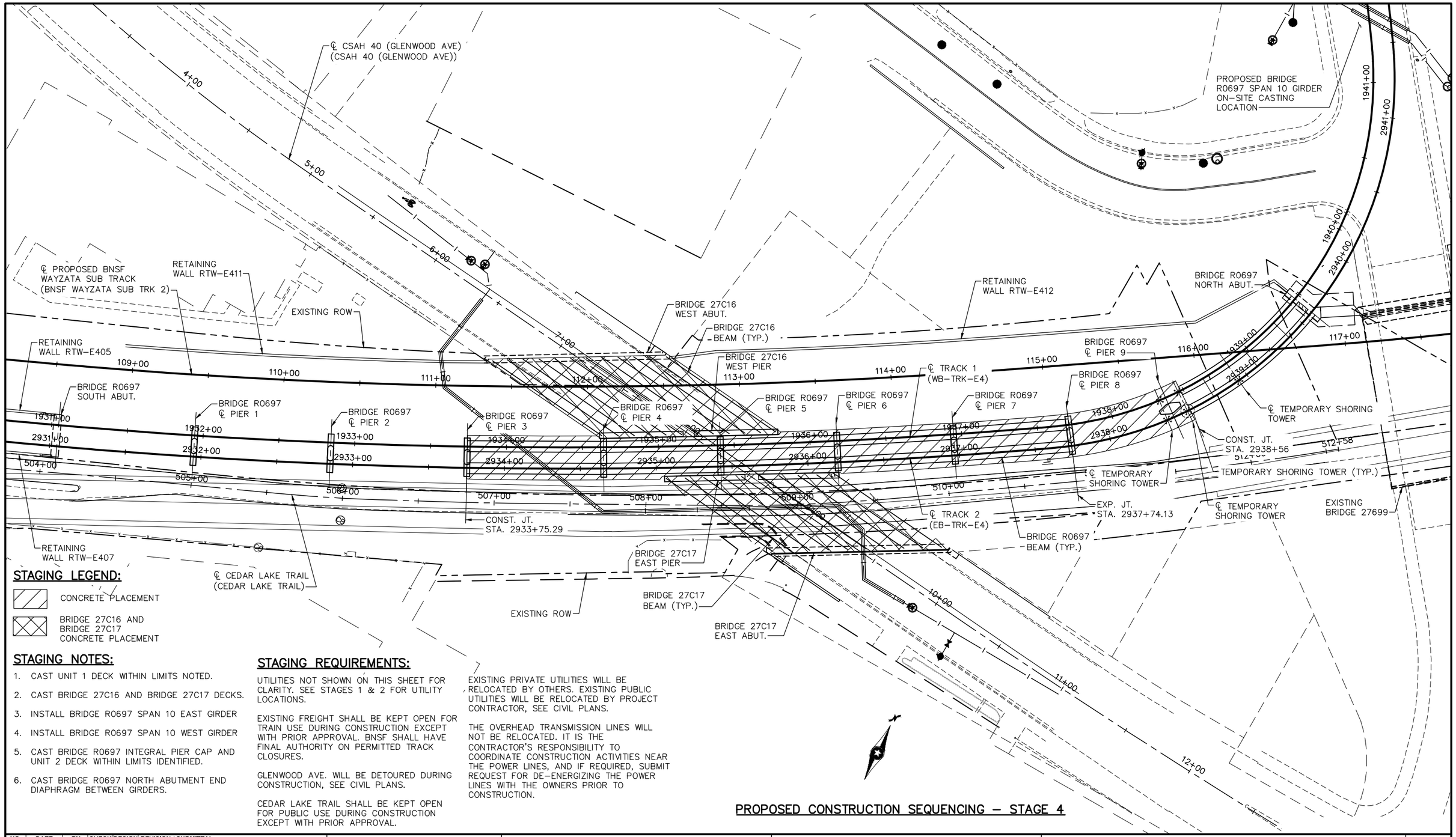

STAGING LEGEND:

CONCRETE PLACEMENT

BRIDGE 27C16 AND BRIDGE 27C17 CONCRETE PLACEMENT

STAGING NOTES:

1. CAST UNIT 1 DECK WITHIN LIMITS NOTED.
2. CAST BRIDGE 27C16 AND BRIDGE 27C17 DECKS.
3. INSTALL BRIDGE R0697 SPAN 10 EAST GIRDER
4. INSTALL BRIDGE R0697 SPAN 10 WEST GIRDER
5. CAST BRIDGE R0697 INTEGRAL PIER CAP AND UNIT 2 DECK WITHIN LIMITS IDENTIFIED.
6. CAST BRIDGE R0697 NORTH ABUTMENT END DIAPHRAGM BETWEEN GIRDERS.

STAGING REQUIREMENTS:

UTILITIES NOT SHOWN ON THIS SHEET FOR CLARITY. SEE STAGES 1 & 2 FOR UTILITY LOCATIONS.

EXISTING FREIGHT SHALL BE KEPT OPEN FOR TRAIN USE DURING CONSTRUCTION EXCEPT WITH PRIOR APPROVAL. BNSF SHALL HAVE FINAL AUTHORITY ON PERMITTED TRACK CLOSURES.

GLENWOOD AVE. WILL BE DETOURED DURING CONSTRUCTION, SEE CIVIL PLANS.

CEDAR LAKE TRAIL SHALL BE KEPT OPEN FOR PUBLIC USE DURING CONSTRUCTION EXCEPT WITH PRIOR APPROVAL.

EXISTING PRIVATE UTILITIES WILL BE RELOCATED BY OTHERS. EXISTING PUBLIC UTILITIES WILL BE RELOCATED BY PROJECT CONTRACTOR, SEE CIVIL PLANS.

THE OVERHEAD TRANSMISSION LINES WILL NOT BE RELOCATED. IT IS THE CONTRACTOR'S RESPONSIBILITY TO COORDINATE CONSTRUCTION ACTIVITIES NEAR THE POWER LINES, AND IF REQUIRED, SUBMIT REQUEST FOR DE-ENERGIZING THE POWER LINES WITH THE OWNERS PRIOR TO CONSTRUCTION.

PROPOSED CONSTRUCTION SEQUENCING – STAGE 4

NO.	DATE	BY	CHECK	DESIGN	REVISION / SUBMITTAL

DESIGNED BY: KAE | CHECKED BY: EJT
DRAWN BY: LMT | CHECKED BY: BLF

AECOM Kimley»Horn

90% SUBMISSION - 01/22/16

METROPOLITAN COUNCIL

SOUTHWEST Green Line LRT Extension

CIVIL - VOLUME 4G
CSAH 40 (GLENWOOD AVENUE) - EAST
BRIDGE 27C17
STAGING PLAN 4

DISCIPLINE: STRUCTURES

SHEET NAME: CBR27C17-BRG-STG-001-4

SHEET 71 OF 71

Jan, 18 2016 09:35 am v:\3400_ADC\CAD\SEGMENT E4\PLAN SHEETS\STRUCTURES\27C17\CBR27C17-BRG-STG-001.dwg By: brad.wodash

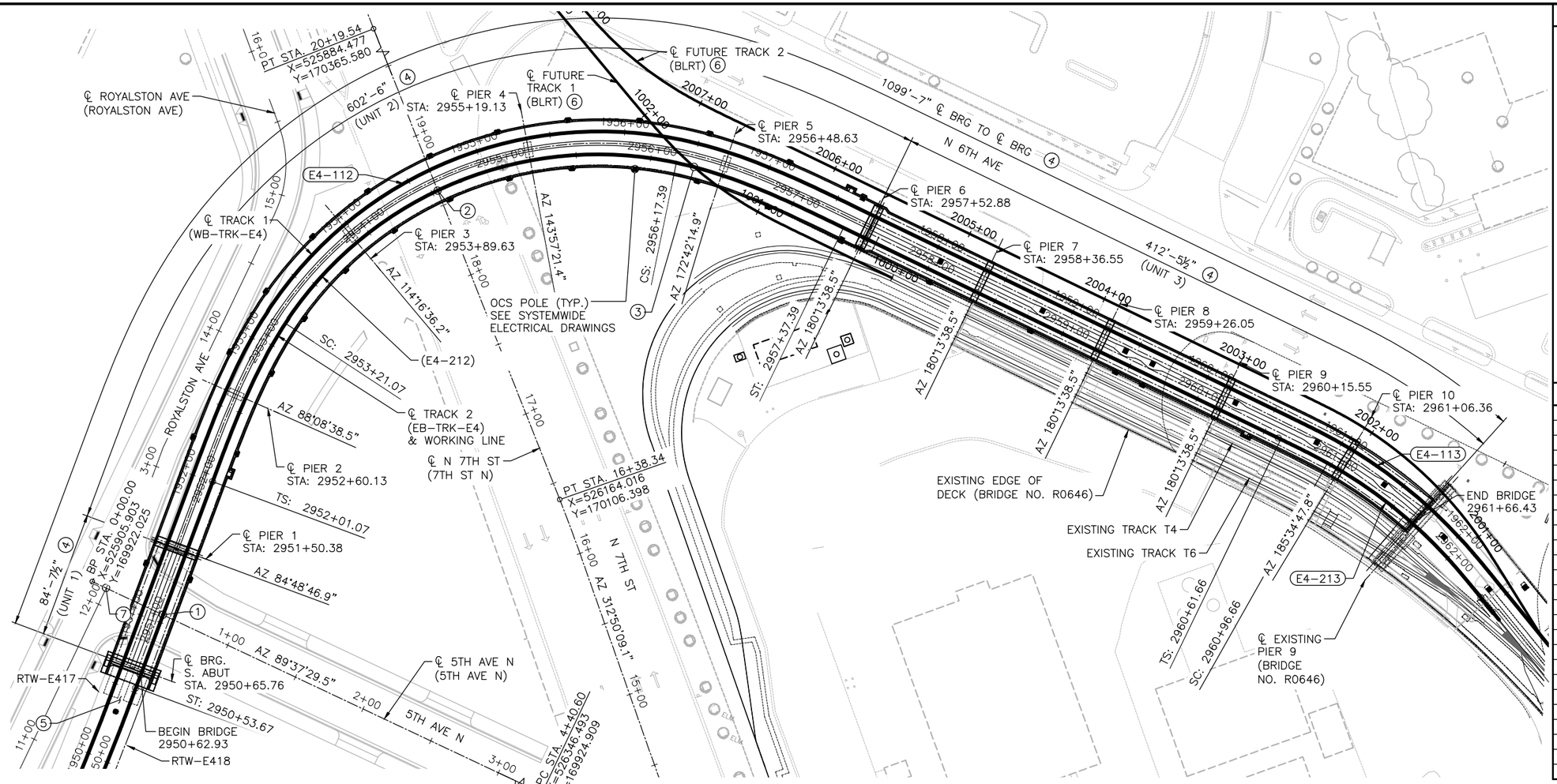

DESIGN DATA

AASHTO LRFD BRIDGE DESIGN SPECIFICATIONS, 7TH EDITION, 2014 WITH 2015 INTERIM REVISIONS

SOUTHWEST LIGHT RAIL TRANSIT DESIGN CRITERIA (REVISION 4.0)

LOAD AND RESISTANCE FACTOR DESIGN METHOD

LRV & MV LOADING DIAGRAM SHOWN ON SHEET 7

MATERIAL DESIGN PROPERTIES
- REINFORCED CONCRETE:
  - f'c = 4 KSI n = 8
  - fy = 60 KSI REINFORCEMENT
- PRESTRESSED CONCRETE:
  - f'c = 8 KSI n = 1
  - fpu = 270 KSI LOW RELAXATION STRANDS
  - 0.75 x fpu FOR INITIAL PRESTRESS
- REINFORCED CONCRETE BOX GIRDER:
  - f'c = 6 KSI n = 6

DESIGN SPEED: OVER = 15 MPH (LRT)
UNDER = 30 MPH (VEH)

APPROXIMATE DECK AREA 34640 SQ. FT.

LIST OF SHEETS

NO.	DESCRIPTION
1	KEY PLAN
2–5	GENERAL PLAN & ELEVATION
6	SCHEDULE OF QUANTITIES
7–8	TRANSVERSE SECTIONS
9–13	BRIDGE LAYOUT
14–23	SOUTH ABUTMENT DETAILS
24–67	PIER DETAILS
68–73	FRAMING PLAN
74–78	PRECAST BEAM DETAILS
79–85	SUPERSTRUCTURE DETAILS
86–106	SUPERSTRUCTURE REINFORCEMENT
107–112	FENCE LAYOUT
113	WIRE FENCE (DESIGN W-1)
114–115	WIRE FENCE SPECIAL DESIGN
116	CONCRETE CURB
117–118	CONDUIT SYSTEM
119–121	DRAINAGE SYSTEM DETAILS
122–125	WATERPROOF EXPANSION DEVICE
126–131	DETAILS
132	AS-BUILT BRIDGE DATA
133–134	BRIDGE SURVEY
135–137	BRIDGE SURVEY PLAN
138–144	BRIDGE SURVEY PROFILE
145–148	STAGING PLAN

NOTES:

SEE BRIDGE SURVEY SHEET FOR IN PLACE UTILITIES.

SEE SHEET 133 FOR TRACK CURVE DETAILS. SEE SHEETS 2–5 FOR ADDITIONAL TRACK LAYOUT INFORMATION.

SEE SHEETS 145–148 FOR CONSTRUCTION STAGING AND SOE REQUIREMENTS.

① CONTROL POINT 1
℄ TRACK 2 (EB–TRK–E4) STA. 2951+05.41
℄ 5TH AVE N (5TH AVE N) STA. 0+52.25
X = 525958.153
Y = 169922.367
ANGLE = 94°48'42.6"

② CONTROL POINT 2
℄ TRACK 2 (EB–TRK–E4) STA. 2954+53.85
℄ N 7TH ST (7TH ST N) STA. 18+60.43
X = 526001.151
Y = 170257.402
ANGLE = 93°50'28.0" (T.T.C.)

③ CONTROL POINT 3
℄ TRACK 2 (EB–TRK–E4) STA. 2956+29.51
℄ FUTURE TRACK 1 STA. 1001+51.41
X = 526148.834
Y = 170345.712
ANGLE = 26°26'28.0" (T.T.C.)

④ DIMENSIONS MEASURED ALONG ℄ TRACK 2. SEE SHEETS 2–5 FOR SPAN LENGTHS.

⑤ SEE TRACK PLANS FOR TRANSITION SLAB DETAILS.

KEY PLAN
0 20' 40' 80'
SCALE IN FEET

⑥ BLRT ALIGNMENT SHOWN IS BASED ON PRELIMINARY INFORMATION WILL BE UPDATED AS ADDITIONAL INFORMATION IS AVAILABLE.

⑦ ℄ 5TH AVE N (5TH AVE N) STA. 0+10.20 =
℄ ROYALSTON AVE (ROYALSTON AVE) STA. 12+11.99
X = 525916.107
Y = 169922.091
ANGLE = 90°16'01.31" (T.T.C.)

2040 PROJECTED TRAFFIC VOLUMES

	5TH AVE N	7TH ST N
A.D.T.	1,700	11,500
D.H.V.	120	990
A.D.T.T.	230	1,590

BRIDGE NO. 27C18

SOUTHWEST LRT TRACKS OVER 5TH AVENUE NORTH AND 7TH STREET. LOCATED 0.3 MILES EAST OF JCT. T.H. 55 (OLSON MEMORIAL HIGHWAY) AND INTERSTATE 94.

BRIDGE ID NOS. 501, 607 & 501

KEY PLAN

SEC 22 T 29N R 24W
CITY OF MINNEAPOLIS HENNEPIN COUNTY

JOB NO.: T9N635 | STATE PROJ. NO.: 9909–01 | MNDOT REVIEW: JOE NIETFIELD

NO.	DATE	BY	CHECK	DESIGN	REVISION / SUBMITTAL

DESIGNED BY: KR CHECKED BY: KJK
DRAWN BY: MSK CHECKED BY: KJK

AECOM Kimley»Horn

90% SUBMISSION - 01/22/16

METROPOLITAN COUNCIL
SOUTHWEST Green Line LRT Extension

CIVIL - VOLUME 4G
5TH AVENUE AND 7TH STREET
BRIDGE 27C18
KEY PLAN

DISCIPLINE: STRUCTURES
SHEET NAME: CBR27C18-BRG-GPE-001

SHEET 1 OF 148

Jan, 18 2016 02:02 pm v:\3400_ADC\CAD\SEGMENT E4\PLAN SHEETS\STRUCTURES\27C18\CBR27C18-BRG-GPE-001.dwg By: Victor.Madrid

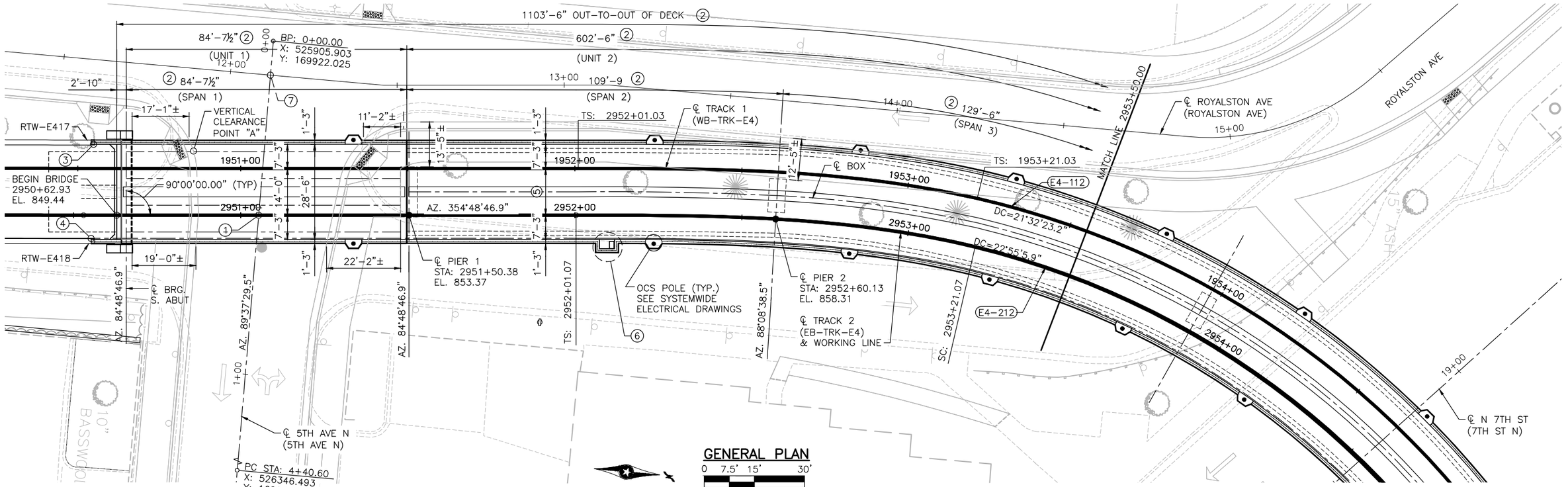

GENERAL PLAN

0 7.5' 15' 30'

SCALE IN FEET

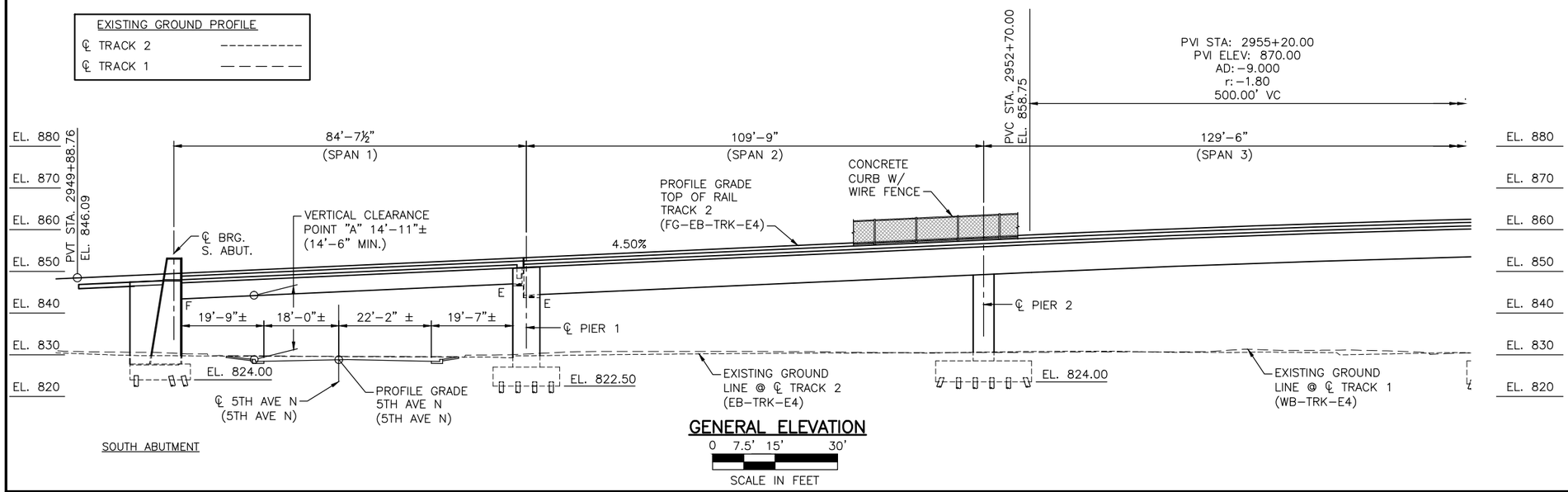

GENERAL ELEVATION

0 7.5' 15' 30'

SCALE IN FEET

NOTES:

WORKING POINTS NOT SHOWN FOR CLARITY. SEE SHEETS 9-13 FOR WORKING POINT DETAILS.

1. ℄ CONTROL POINT 1
   ℄ TRACK 2 (EB-TRK-E4) STA. 2951+05.41
   ℄ 5TH AVE N (5TH AVE N) STA. 0+52.25
   X = 525958.153
   Y = 169922.367
   ANGLE = 94°48'42.6"
2. DIMENSIONS MEASURED ALONG ℄ TRACK 2.
3. END OF WINGWALL = BEGIN RET. WALL E417 ℄ TRACK 2 (EB-TRK-E4) STA. 2950+55.26, 22.50 LT. X=525940.279; Y=169870.384
4. END OF WINGWALL = BEGIN RET. WALL E418 ℄ TRACK 2 (EB-TRK-E4) STA. 2950+55.26, 8.50 RT. X=525971.152; Y=169873.187
5. 14'-0": STA. 2951+50.38 TO STA. 2952+01.07

   TRANSITION 14'-0" TO 16'-0": STA. 2952+01.07 TO STA. 2957+37.39

   16'-0": STA. 2957+37.39 TO 2957+52.88
6. FRICTION MODIFIER EQUIPMENT BLISTER.
7. ℄ 5TH AVE N (5TH AVE N) STA. 0+10.20 = ℄ ROYALSTON AVE (ROYALSTON AVE) STA. 12+11.99
   X = 525916.107
   Y = 169922.091
   ANGLE = 90°16'01.31"

NO.	DATE	BY	CHECK	DESIGN	REVISION / SUBMITTAL

DESIGNED BY: KR | CHECKED BY: KJK
DRAWN BY: MSK | CHECKED BY: KJK

AECOM Kimley»Horn

90% SUBMISSION - 01/22/16

METROPOLITAN COUNCIL

SOUTHWEST Green Line LRT Extension

CIVIL - VOLUME 4G
5TH AVENUE AND 7TH STREET
BRIDGE 27C18
GENERAL PLAN & ELEVATION 1

DISCIPLINE: STRUCTURES

SHEET NAME: CBR27C18-BRG-GPE-002

SHEET 2 OF 148

Jan, 19 2016 08:44 am V:\3400_ADC\CAD\SEGMENT E4\PLAN SHEETS\STRUCTURES\27C18\CBR27C18-BRG-GPE-002.dwg By: kevin.kimm

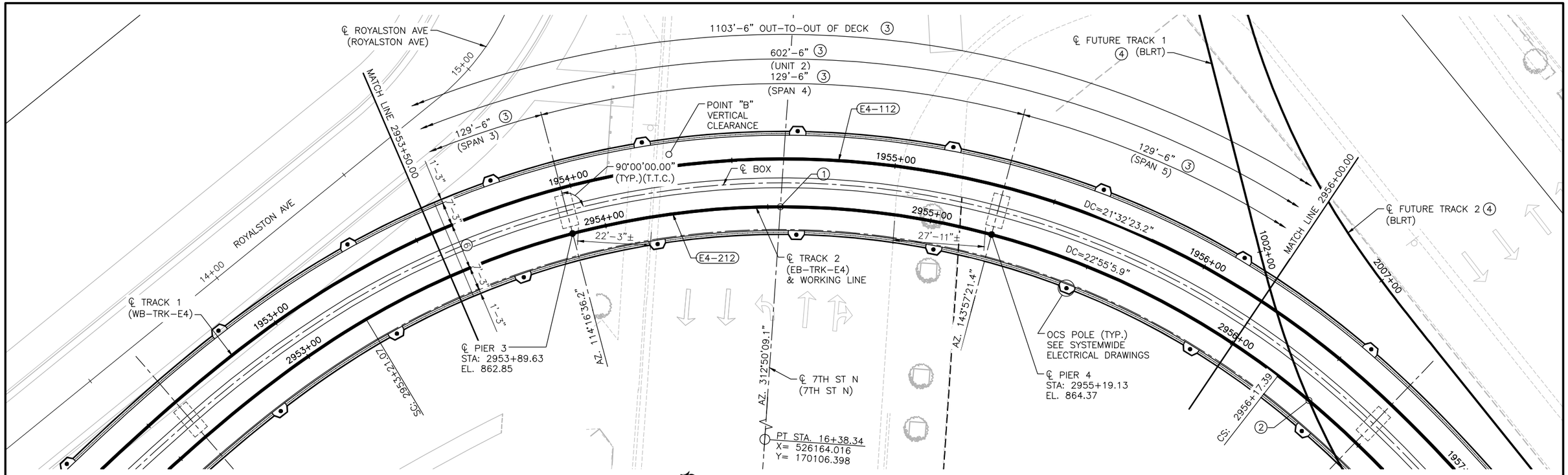

GENERAL PLAN

0 7.5' 15' 30'

SCALE IN FEET

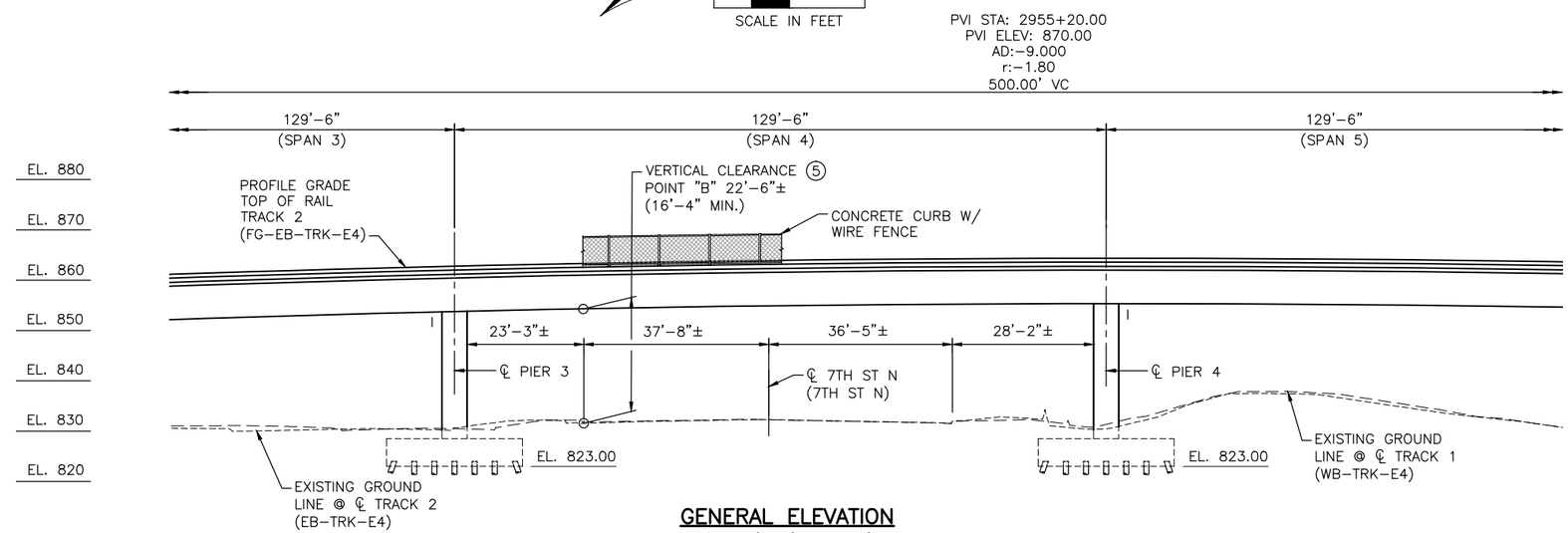

GENERAL ELEVATION

0 7.5' 15' 30'

SCALE IN FEET

EXISTING GROUND PROFILE

℄ TRACK 2 ----------

℄ TRACK 1 — — — — —

NOTES:

WORKING POINTS NOT SHOWN FOR CLARITY. SEE SHEETS 9-13 FOR WORKING POINT DETAILS.

(1) CONTROL POINT 2
℄ TRACK 2 (EB-TRK-E4) STA. 2954+53.85
℄ 7TH ST N (7TH ST N) STA. 18+60.43
X = 526001.151
Y = 170257.402
ANGLE = 93°50'28.0" (T.T.C.)

(2) CONTROL POINT 3
℄ TRACK 2 (EB-TRK-E4) STA. 2956+29.51
℄ FUTURE TRACK 1 STA. 1001+51.41
X = 526148.834
Y = 170345.712
ANGLE = 26°26'28.0" (T.T.C.)

(3) DIMENSIONS MEASURED ALONG ℄ TRACK 2.

(4) BLRT ALIGNMENT AND PROFILE SHOWN IS BASED ON PRELIMINARY INFORMATION AND WILL BE UPDATED AS ADDITIONAL INFORMATION IS AVAILABLE.

(5) CRITICAL CLEARANCE DATA BASED ON SURVEY TAKEN AT TOP OF ROADWAY.

(6) 14'-0": STA. 2951+50.38 TO STA. 2952+01.07

TRANSITION 14'-0" TO 16'-0": STA. 2952+01.07 TO STA. 2957+37.39

16'-0": STA 2957+37.39 TO 2957+52.88

NO.	DATE	BY	CHECK	DESIGN	REVISION / SUBMITTAL

DESIGNED BY: KR | CHECKED BY: KJK

DRAWN BY: MSK | CHECKED BY: KJK

AECOM Kimley»Horn

90% SUBMISSION - 01/22/16

METROPOLITAN COUNCIL

SOUTHWEST Green Line LRT Extension

CIVIL - VOLUME 4G
5TH AVENUE AND 7TH STREET
BRIDGE 27C18
GENERAL PLAN & ELEVATION 2

DISCIPLINE: STRUCTURES

SHEET NAME: CBR27C18-BRG-GPE-003

SHEET 3 OF 148

Jan, 19 2016 08:50 am v:\3400_ADC\CAD\SEGMENT E4\PLAN SHEETS\STRUCTURES\27C18\CBR27C18-BRG-GPE-003.dwg By: kevin.kimm

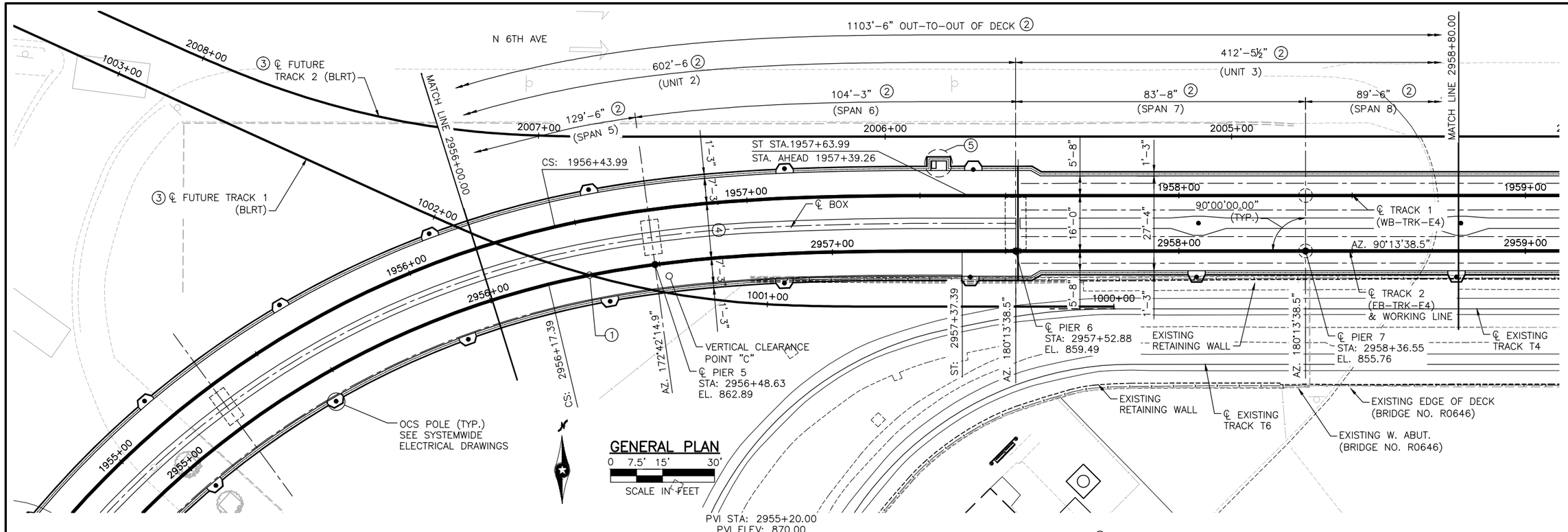

NOTES:

WORKING POINTS NOT SHOWN FOR CLARITY. SEE SHEETS 9-13 FOR WORKING POINT DETAILS.

1. CONTROL POINT 3
   ℄ TRACK 2 (EB-TRK-E4) STA. 2956+29.51
   ℄ FUTURE TRACK 1 STA. 1001+51.41
   X = 526148.834
   Y = 170345.712
   ANGLE = 26°26'28.0" (T.T.C.)
2. DIMENSIONS MEASURED ALONG ℄ TRACK 2.
3. BLRT ALIGNMENT SHOWN IS BASED ON PRELIMINARY INFORMATION AND WILL BE UPDATED AS ADDITIONAL INFORMATION IS AVAILABLE.
4. 14'-0": STA. 2951+50.38 TO STA. 2952+01.07

   TRANSITION 14'-0" TO 16'-0": STA. 2952+01.07 TO STA. 2957+37.39

   16'-0": STA 2957+37.39 TO 2957+52.88
5. FRICTION MODIFIER EQUIPMENT BLISTER.

EXISTING GROUND PROFILE
℄ TRACK 2 ----------
℄ TRACK 1 — — — — —

NO.	DATE	BY	CHECK	DESIGN	REVISION / SUBMITTAL

DESIGNED BY: KR CHECKED BY: KJK
DRAWN BY: MSK CHECKED BY: KJK

AECOM Kimley»Horn

90% SUBMISSION - 01/22/16

METROPOLITAN COUNCIL

SOUTHWEST Green Line LRT Extension

CIVIL - VOLUME 4G
5TH AVENUE AND 7TH STREET BRIDGE 27C18
GENERAL PLAN & ELEVATION 3

DISCIPLINE: STRUCTURES
SHEET NAME: CBR27C18-BRG-GPE-004

SHEET 4 OF 148

Jan. 18 2016 02:19 pm V:\3400_ADC\CAD\SEGMENT E4\PLAN SHEETS\STRUCTURES\27C18\CBR27C18-BRG-GPE-004.dwg By: Victor.Madrid

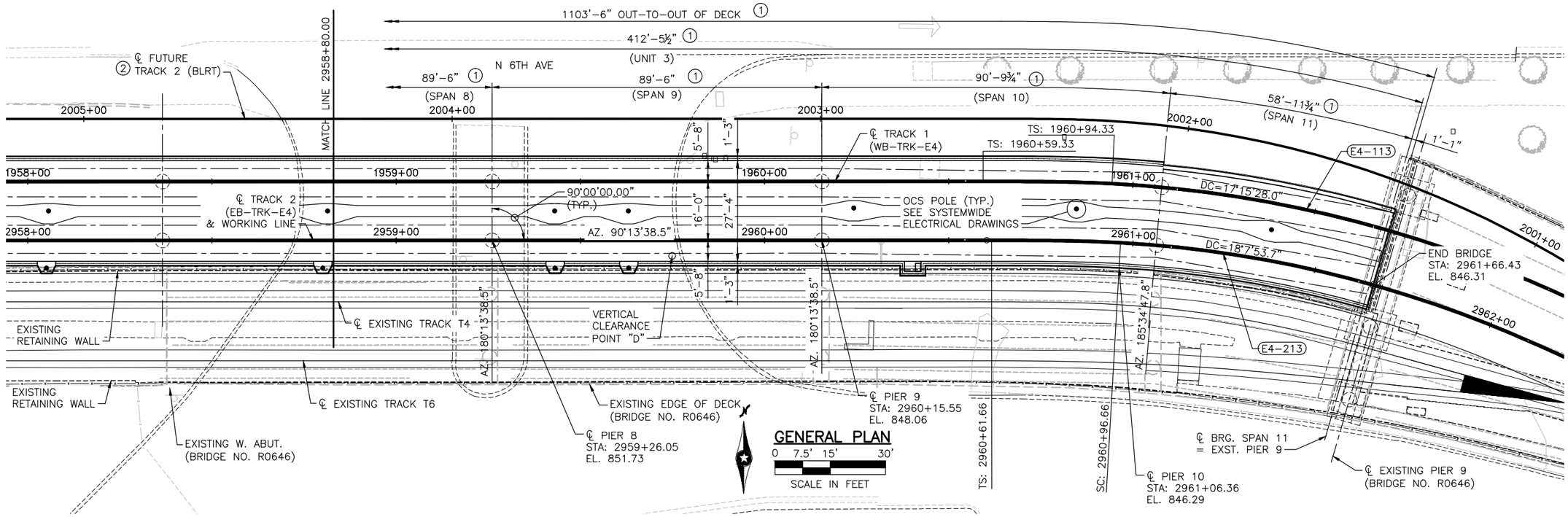

NOTES:

WORKING POINTS NOT SHOWN FOR CLARITY. SEE SHEETS 9–13 FOR WORKING POINT DETAILS.

(1) DIMENSIONS MEASURED ALONG ℄ TRACK 2.

(2) BLRT ALIGNMENT AND PROFILE SHOWN IS BASED ON PRELIMINARY INFORMATION AND WILL BE UPDATED AS ADDITIONAL INFORMATION IS AVAILABLE.

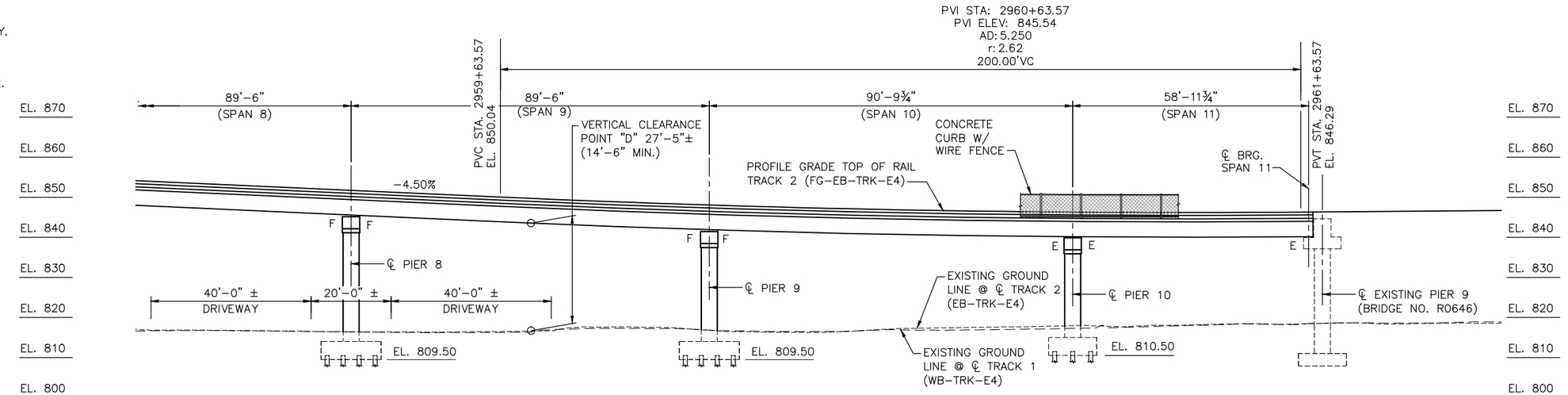

EXISTING GROUND PROFILE
℄ TRACK 2 ----------
℄ TRACK 1 — — — — —

GENERAL ELEVATION
0 7.5' 15' 30'
SCALE IN FEET

NO.	DATE	BY	CHECK	DESIGN	REVISION / SUBMITTAL

DESIGNED BY: KR CHECKED BY: KJK
DRAWN BY: MSK CHECKED BY: KJK

AECOM Kimley»Horn

90% SUBMISSION - 01/22/16

METROPOLITAN COUNCIL

SOUTHWEST Green Line LRT Extension

CIVIL - VOLUME 4G
5TH AVENUE AND 7TH STREET BRIDGE 27C18
GENERAL PLAN & ELEVATION 4

DISCIPLINE: STRUCTURES

SHEET NAME: CBR27C18-BRG-GPE-005

SHEET 5 OF 148

Jan. 19 2016 08:56 am V:\3400_ADC\CAD\SEGMENT E4\PLAN SHEETS\STRUCTURES\27C18\CBR27C18-BRG-GPE-005.dwg By: kevin.kimm

CONSTRUCTION NOTES:

THE 2016 EDITION OF THE MINNESOTA DEPARTMENT OF TRANSPORTATION "STANDARD SPECIFICATIONS FOR CONSTRUCTION" SHALL GOVERN.

BRIDGE SEAT REINFORCEMENT SHALL BE CAREFULLY PLACED TO AVOID INTERFERENCE WITH DRILLING HOLES FOR ANCHOR RODS, THE BEAMS SHALL BE ERECTED IN FINAL POSITION PRIOR TO DRILLING HOLES FOR AND PLACING ANCHOR RODS.

THE BAR SIZES SHOWN IN THIS PLAN ARE IN U.S. CUSTOMARY DESIGNATIONS. THE FIRST DIGIT OR THE FIRST TWO DIGITS OF EACH BAR MARK INDICATE THE BAR SIZE.

BARS MARKED WITH THE SUFFIX "E" SHALL BE EPOXY COATED IN ACCORDANCE WITH SPEC. 3301.

ALL REINFORCEMENT SHALL BE 2 INCHES CLEAR, UNLESS SHOWN OR NOTED OTHERWISE.

THE PILE LOADS SHOWN IN THE PLANS AND THE CORRESPONDING NOMINAL PILE BEARING RESISTANCE (Rn) WERE COMPUTED USING LRFD METHODOLOGY. PILE BEARING RESISTANCE DETERMINED IN THE FIELD SHALL INCORPORATE THE METHODS AND/OR FORMULAS DESCRIBED IN THE SPECIAL PROVISIONS.

THE SUBSURFACE UTILITY INFORMATION IN THIS PLAN IS UTILITY QUALITY LEVEL D. THIS UTILITY QUALITY LEVEL WAS DETERMINED ACCORDING TO THE GUIDELINES OF CI/ASCE 38-02, ENTITLED "STANDARD GUIDELINES FOR THE COLLECTION AND DEPICTION OF EXISTING SUBSURFACE UTILITY DATA".

STRAY CURRENT CONTROL NOTES:

THE FOLLOWING STRAY CURRENT CONTROL NOTES ARE A SUPPLEMENT TO THE SYSTEMWIDE ELECTRICAL DRAWINGS, VOLUME 12 FOR ASSOCIATED DETAILS AND DOCUMENT CERTIFICATION RELATED TO STRAY CURRENT REQUIREMENTS.

1. ALL REBAR IN THE ABUTMENT WALLS, DECK SLAB, BEAMS, PIER COLUMNS AND CAPS AND PLINTH BLOCKS SHALL BE EPOXY COATED. ALL EPOXY COATED REBAR SHALL BE TIED TOGETHER USING NON-METALLIC OR NON-METALLIC COATED TIES.
2. ALL HORIZONTAL BLACK REBARS IN THE FOOTINGS FOR INTEGRAL PIERS 2 THROUGH 5 AND FOR THE SOUTH ABUTMENT SHALL BE MADE ELECTRICALLY CONTINUOUS WITHIN FOOTING. SEE DETAILS ON SHEETS E0-SYS-CORR-DTL-001 AND 026.
3. EPOXY COATED DOWELS SHOULD EXTEND OUT OF FOOTINGS INTO THE SOUTH ABUTMENT AND INTO THE PIER COLUMNS FOR INTEGRAL PIERS 2 THROUGH 5.
4. ALL STEEL SHELLS OF CIP PILES AND H-PILES SHALL BE BONDED TOGETHER AND MADE ELECTRICALLY CONTINUOUS WITH THE WELDED REBAR IN THE FOOTINGS FOR THE SOUTH ABUTMENT AND INTEGRAL PIERS 2 THROUGH 4. SEE DETAILS ON SHEETS E0-SYS-CORR-DTL-008 AND 026.
5. ALL NON-INTEGRAL PIER BEARINGS SHALL PROVIDE ELECTRICAL ISOLATION OF THE STEEL ELEMENTS IN THE PRECAST BEAMS FROM STEEL ELEMENTS IN THE PIER CAPS AND COLUMNS.
6. A ⅜-INCH UNCOATED, GALVANIZED STEEL CABLE SHALL BE INSTALLED IN A 1"X2" DEEP LONGITUDINAL GROOVE IN THE DECK POSITIONED DIRECTLY BELOW EACH RUNNING RAIL. THE CABLE SHALL BE POSITIONED IN THE DECK SUCH THAT IT DOES NOT INTERFERE WITH INSTALLATION OF THE PLINTH ANCHOR INSERTS. SEE SHEET E0-SYS-CORR-DTL-010.
7. AT DECK EXPANSION JOINTS THAT DO NOT HAVE A STRAY CURRENT BOND TEST STATION ELECTRICAL CONTINUITY OF THE GALVANIZED STEEL CABLE SHALL BE MAINTAINED ACROSS THE EXPANSION JOINT. SUFFICIENT SLACK SHALL BE AVAILABLE IN THE CABLES THAT SPAN THE EXPANSION JOINT TO ACCOUNT FOR MOVEMENT OF THE JOINT. SEE SHEET E0-SYS-CORR-DTL-011.

STRAY CURRENT CONTROL NOTES CONT.:

8. AT THE SOUTH END OF THE BRIDGE INSTALL STRAY CURRENT BOND TEST STATION HOUSING TWO INSULATED #1/0 AWG CABLES FROM GALVANIZED STEEL CABLES IN DECK. TWO #1/0 AWG CABLES FROM WELDED REBAR IN TRANSITION SLAB AND 250 MCM CABLE TO GROUND ROD ARRAY AT BASE OF ABUTMENT. SEE DETAIL 2 ON SHEET E0-SYS-CORR-DTL-003. SEE NOTE 17. NO REFERENCE ELECTRODE IS TO BE INSTALLED IN THE DECK. SINCE THERE IS NO BLACK REBAR IN THE DECK, SUFFICIENT SLACK SHALL BE AVAILABLE IN THE CABLES THAT SPAN THE EXPANSION JOINT TO ACCOUNT FOR MOVEMENT OF THE JOINT.
9. LONGITUDINAL REBAR IN TRANSITION SLAB SHALL BE MADE ELECTRICALLY CONTINUOUS WITHIN SLAB. END TRANSVERSE COLLECTOR BARS SHALL BE WELDED TO ALL LONGITUDINAL REBARS AT EACH END AND IN EACH REBAR LAYER OF THE TRANSITION SLAB. TOP AND BOTTOM REBAR LAYERS SHALL BE WELDED TOGETHER USING ½"X2" STEEL STRAPS INSTALLED 2 PER TRACK AT EACH END OF SLAB. #1/0 AWG CABLES (2 PER TRACK) SHALL BE WELDED TO END TRANSVERSE COLLECTOR BAR NEAREST ABUTMENT AND TERMINATED IN JUNCTION BOX ALONG BRIDGE THAT HOUSES WIRES FROM STEEL CABLES IN BRIDGE TRACK SLAB AND GROUND ROD(S). SEE SHEET E0-SYS-CORR-DTL-010. SUFFICIENT SLACK SHALL BE AVAILABLE IN THE CABLES THAT SPAN THE EXPANSION JOINT TO ACCOUNT FOR MOVEMENT OF THE JOINT.
10. ALONG THE BRIDGE AT PIER 3 INSTALL STRAY CURRENT TEST STATION HOUSING TWO INSULATED #1/0 AWG CABLES FROM GALVANIZED STEEL CABLES FROM ONE SIDE OF THE FIXED CONSTRUCTION JOINT. SEE DETAIL 4 ON SHEET E0-SYS-CORR-DTL-003 AND SHEET E0-SYS-CORR-DTL-010. SEE NOTE 16. NO REFERENCE ELECTRODE IS TO BE INSTALLED IN THE DECK, SINCE THERE IS NO BLACK REBAR IN THE DECK.
11. ALONG THE BRIDGE AT PIER 6 INSTALL STRAY CURRENT BOND TEST STATION HOUSING TWO INSULATION #1/0 AWG CABLES FROM GALVANIZED STEEL CABLES ON EACH SIDE OF EXPANSION JOINT IN TRACK SLAB. SEE DETAIL 3 ON SHEET E0-SYS-CORR-DTL-003 AND SHEET E0-SYS-CORR-DTL-010. SEE NOTE 16. NO REFERENCE ELECTRODE IS TO BE INSTALLED IN THE DECK, SINCE THERE IS NO BLACK REBAR IN THE DECK.
12. AT THE NORTH END OF THE BRIDGE(EXISTING PIER 9) INSTALL A STRAY CURRENT BOND TEST STATION ALONG BRIDGE HOUSING TWO #1/0 AWG THWN CABLES FROM UNCOATED GALVANIZED STEEL CABLES IN TRACK SLAB AND 250 MCM CABLE TO GROUND ROD ARRAY AT BASE OF ABUTMENT. SEE DETAIL 1 ON SHEET E0-SYS-CORR-DTL-003 AND SHEET E0-SYS-CORR-DTL-010. SUFFICIENT SLACK SHALL BE AVAILABLE IN THE CABLES THAT SPAN THE EXPANSION JOINT TO ACCOUNT FOR MOVEMENT OF THE JOINT. SEE NOTE 15. NO REFERENCE ELECTRODE IS TO BE INSTALLED IN THE DECK, SINCE THERE IS NO BLACK REBAR IN THE DECK .IF TEST WIRES ARE PRESENT FROM THE AERIAL STRUCTURE TO THE EAST OF EXISTING PIER 9, THEN THEY SHOULD BE EXTENDED IN THE NEW TEST STATION.
13. INSTALL STRAY CURRENT TEST STATION ON COLUMNS AT INTEGRAL PIERS 2 THROUGH 5 HOUSING TWO #1/0 AWG CABLES FROM WELDED REBAR/STEEL PILE SHELLS IN PIER FOOTINGS AND #14 HMWPE CABLE FROM COPPER/COPPER SULFATE REFERENCE CELL. REFERENCE CELL SHALL BE INSTALLED IN SOIL WITHIN 1-FOOT OF PILE AND 1-FOOT BELOW BOTTOM OF FOOTING. SEE NOTE 16. SEE DETAIL 4 ON SHEET E0-SYS-CORR-DTL-003 AND DETAIL 1 ON SHEET E0-SYS-CORR-DTL-013.
14. INSTALL STRAY CURRENT GROUND ROD ARRAY NEAR BASE OF ABUTMENT. GROUND ROD ARRAY SHOULD EXHIBIT A MAXIMUM RESISTANCE TO EARTH OF 25 OHMS. USE 250 MSM THWN CABLE TO INTERCONNECT GROUND RODS AND AS GROUND CABLE TO STRAY CURRENT COLLECTION MAT TEST STATIONS AT END OF BRIDGE STRUCTURE. 250 MCM CABLE SHALL RUN INSIDE 2" SCH 80 PVC CONDUIT THAT IS EMBEDDED WITHIN ABUTMENT. SEE DETAILS 2 TO 4 ON SHEET E0-SYS-CORR-DTL-013.
15. INSTALL STRAY CURRENT BOND TEST STATION HOUSING TWO #⅛ AWG CABLES FROM ELECTRICALLY CONTINUOUS REBAR AND PILES IN SOUTH ABUTMENT FOOTING. TWO #1/0 AWG CABLES FROM ELECTRICALLY CONTINUOUS REBAR AND PILES IN RETAINING WALLS E417 OR E418, AND TWO #14 AWG HMWPE CABLES FROM COPPER/COPPER SULFATE REFERENCE CELLS. SEE NOTE 16. SEE DETAIL 3 ON SHEET E0-SYS-CORR-DTL-003 AND DETAIL 3 ON SHEET E0-SYS-CORR-DTL-017.

SCHEDULE OF QUANTITIES

SPEC. SECTION	COMPONENT ITEM	UNIT	QUANTITY
–	CONSTRUCT BRIDGE 27C18	LUMP SUM	LS

COMPONENT ITEM SUMMARY (BRIDGE 27C18)

(3) SPEC. SECTION	COMPONENT ITEM	UNIT (2)	QUANTITY (2)
2401	STRUCTURAL CONCRETE (1G52)	CU. YD.	
2401	STRUCTURAL CONCRETE (3B52)	CU. YD.	
2401	STRUCTURAL CONCRETE (3JM)	CU. YD.	
2401	REINFORCEMENT BARS	POUND	
2401	REINFORCEMENT BARS (EPOXY COATED)	POUND	
2401	BRIDGE SLAB CONCRETE (3Y42)	CU. YD.	
2401	TYPE CURB RAILING CONCRETE (3552)	LIN. FT.	
2402	EXPANSION JOINT DEVICES TYPE 4	LIN. FT.	
2402	EXPANSION JOINT DEVICES TYPE 5	LIN. FT.	
2402	EXPANSION JOINT DEVICES TYPE SPECIAL	LIN. FT.	
2402	BEARING ASSEMBLY	EACH	
2402	PRESTRESSED CONCRETE BEAMS MN45	LIN. FT.	
2405	DIAPHRAGMS FOR TYPE MN45 PRESTRESSED BEAMS	LIN. FT.	
SB-XX	ARCHITECTURAL CONCRETE TEXTURE (RECTANGULAR GRID)	SQ. FT.	
SB-XX	ARCHITECTURAL CONCRETE TEXTURE (LIMESTONE)	SQ. FT.	
SB-XX	STRUCTURAL EXCAVATION CLASS U	CU. YD.	
SB-XX	STEEL H-PILING 12"	LIN. FT.	
SB-XX	C-I-P CONCRETE PILING 12"	LIN. FT.	
2452	C-I-P CONCRETE TEST PILE 90-FT LONG 12"	EACH	
2452	C-I-P CONCRETE TEST PILE 100-FT LONG 12"	EACH	
2452	STEEL H-TEST PILE 95 FT LONG 12"	EACH	
2452	STEEL H-TEST PILE 100 FT LONG 12"	EACH	
2452	STEEL H-TEST PILE 130 FT LONG 12"	EACH	
2452	STEEL H-TEST PILE 140 FT LONG 12"	EACH	
2452	PILE TIP PROTECTION 12"	EACH	
SB-XX	STEEL SHEET PILING (TEMPORARY)	LUMP SUM	
2481	MEMBRANE WATERPROOFING SYSTEM	LIN. FT.	
2502	DRAINAGE SYSTEM	EACH	
2545	CONDUIT SYSTEM	EACH	
2557	WIRE FENCE (DESIGN W-1)	LIN. FT.	
2557	WIRE FENCE SPECIAL DESIGN	LIN. FT.	

STRAY CURRENT CONTROL NOTES CONT.:

16. ALL STRAY CURRENT TEST STATIONS SHALL BE INSTALLED AT LOCATIONS WHERE THEY WILL BE ACCESSIBLE AFTER COMPLETION OF ALL CONSTRUCTION ACTIVITIES AND DURING REVENUE OPERATIONS OF THE LRT SYSTEM.
17. MAINTAIN ELECTRICAL ISOLATION OF REBAR IN ABUTMENT WINGWALLS AND REBAR IN ADJACENT RTW.
18. THE CONCRETE/SOIL/ INTERFACE ALONG EACH STEEL SLEEVE FOR THE CIP PILES OR FOR EACH H-PILE UNDER THE FOOTINGS FOR THE ABUTMENTS AND PIERS SHALL BE COATED WITH A DIELECTRIC COATING OR HEAT SHRINK SLEEVE. THE COATING SHALL EXTEND INTO THE CONCRETE FOOTING AT LEAST 6-INCHES AND EXTEND A MINIMUM OF 18-INCHES INTO THE SOIL ALONG THE EXTERNAL PILE SURFACE BELOW THE BOTTOM OF THE FOOTING.

NOTES:

(1) A BENCHMARK IS REQUIRED, LOCATED AT THE SOUTHEAST CORNER OF THE BRIDGE. STATE WILL FURNISH DISK. BEND PRONGS OUTWARD TO ANCHOR DISK TO CNOCRETE. BOTTOM OF DISK TOP TO BE PLACED FLUSH WITH CONCRETE.

(2) QUANTITIES LISTED FOR THE COMPONENT ITEMS OF THE LUMP SUM BR 27C18 ITEM ARE FOR INFORMATION PURPOSES. ANY ADDITIONAL ITEMS OR CHANGES IN QUANTITIES REQUIRED SHALL BE PROVIDED BY THE CONTRACTOR WITH NO ADDITIONAL COMPENSATION.

(3) MEASUREMENT AND PAYMENT FOR COMPONENT ITEMS SHALL BE PART OF THE LUMP SUM PAYMENT FOR BR 27C18. REFER TO MNDOT STANDARD SPECIFICATION OR SPECIAL PROVISION FOR TECHNICAL SPECIFICATION REQUIREMENTS FOR ALL PROVISION OTHER THAN MEASUREMENT AND PAYMENT SERVICES.

NO.	DATE	BY	CHECK	DESIGN	REVISION / SUBMITTAL

DESIGNED BY: KR | CHECKED BY: KJK
DRAWN BY: MSK | CHECKED BY: KJK

AECOM Kimley»Horn

90% SUBMISSION - 01/22/16

METROPOLITAN COUNCIL

SOUTHWEST Green Line LRT Extension

CIVIL - VOLUME 4
5TH AVENUE AND 7TH STREET
BRIDGE 27C18
SCHEDULE OF QUANTITIES

DISCIPLINE: STRUCTURES
SHEET NAME: CBR27C18-BRG-TRN-001

SHEET 6 OF 148

Jan, 18 2016 02:25 pm v:\3400_ADC\CAD\SEGMENT E4\PLAN SHEETS\STRUCTURES\27C18\CBR27C18-BRG-TRN-001.dwg By: Victor.Madrid

NOTES:

(1) STRAY CURRENT COLLECTOR CABLE, SEE STRAY CURRENT CONTROL NOTE 6 ON SHEET 6.

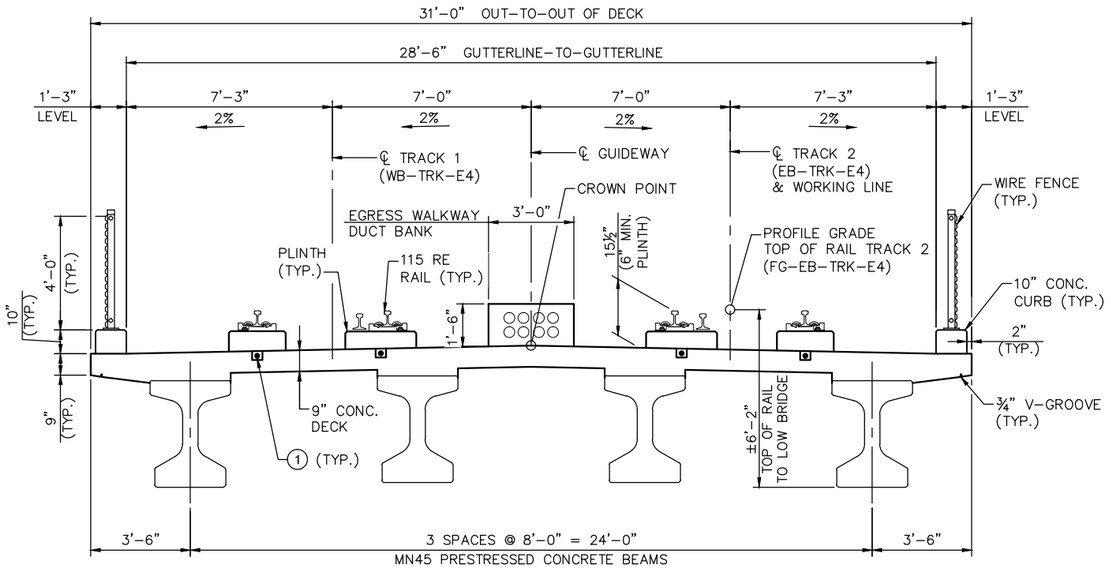

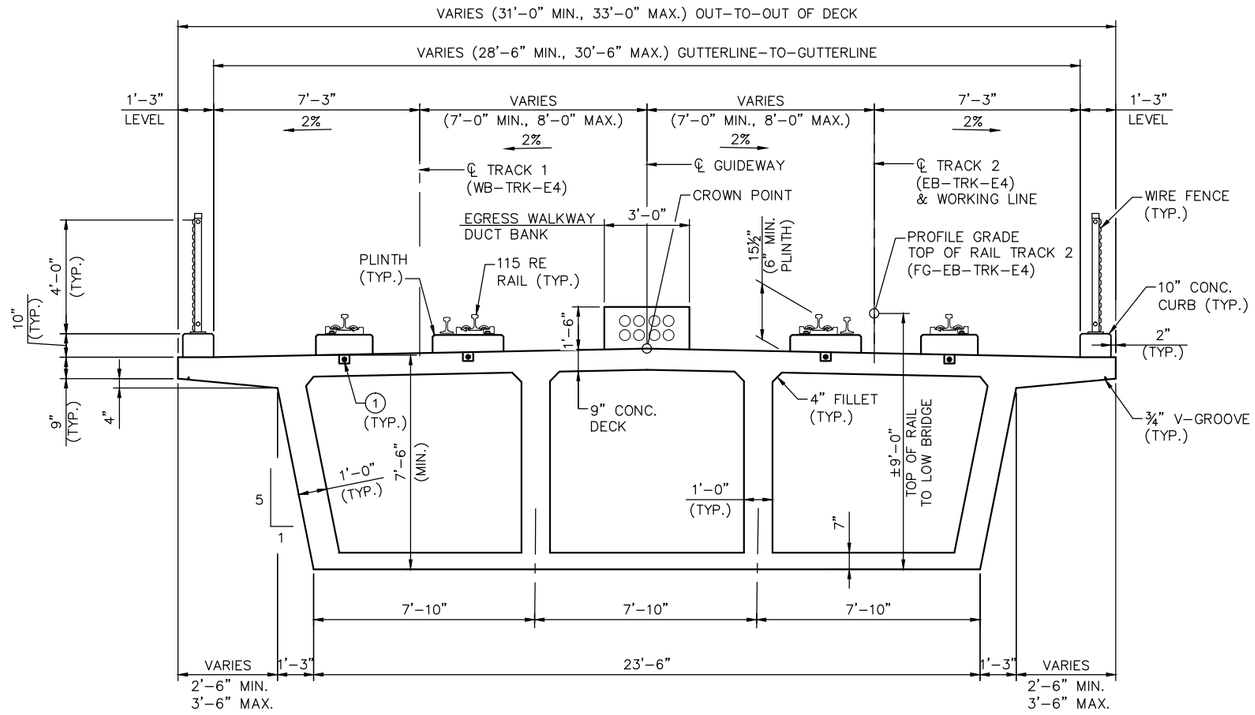

WEST

TRANSVERSE SECTION
(UNIT 1)

0 1.5' 3' 6'
SCALE IN FEET

EAST

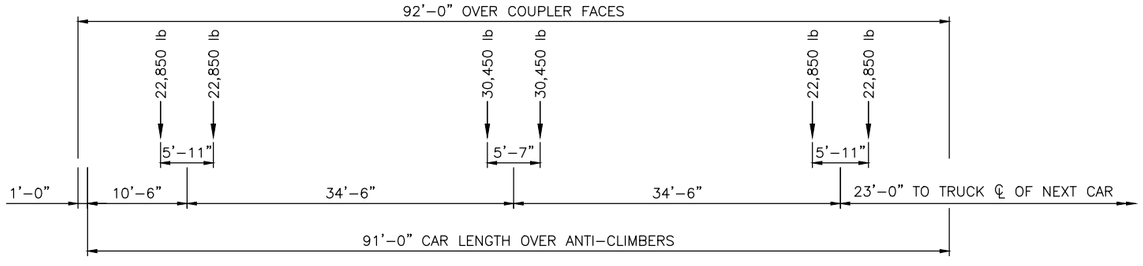

LIGHT RAIL VEHICLE LOADING DIAGRAM

NOTES:

THE LRT TRAIN SHALL CONSIST OF EITHER ONE, TWO, OR THREE CARS, WHICHEVER PRODUCES THE MAXIMUM LOAD FOR THE ELEMENT UNDER CONSIDERATION.

AXLE LOAD IN POUNDS.

LOADING DIAGRAM REPRESENTS MAXIMUM LOAD AT EACH TRUCK.

WEST/NORTH

TRANSVERSE SECTION
(UNIT 2)

0 1.5' 3' 6'
SCALE IN FEET

EAST/SOUTH

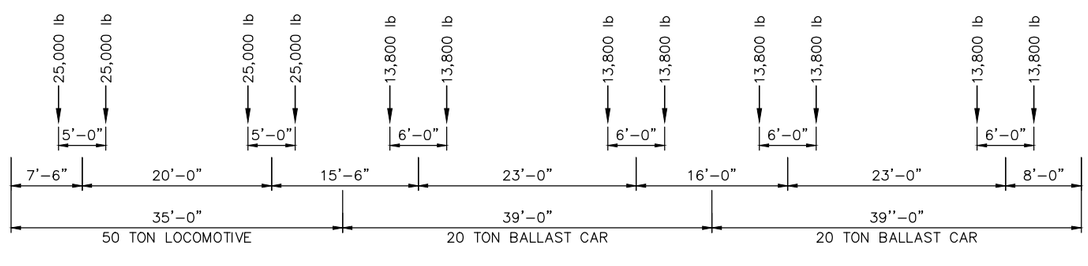

MAINTENANCE TRAIN LOADING DIAGRAM

NOTES:

THE MAINTENANCE TRAIN SHALL CONSIST OF ONE LOCOMOTIVE AND ONE, TWO, THREE, OR FOUR BALLAST CARS, WHICHEVER PRODUCES THE MAXIMUM LOAD FOR THE ELEMENT UNDER CONSIDERATION.

AXLE LOAD IN POUNDS.

WEIGHT OF EMPTY BALLAST CAR IS 15,000 POUNDS.

NO.	DATE	BY	CHECK	DESIGN	REVISION / SUBMITTAL

DESIGNED BY: KR | CHECKED BY: KJK
DRAWN BY: MSK | CHECKED BY: KJK

AECOM Kimley»Horn

90% SUBMISSION - 01/22/16

METROPOLITAN COUNCIL

SOUTHWEST Green Line LRT Extension

CIVIL - VOLUME 4
5TH AVENUE AND 7TH STREET BRIDGE 27C18
TRANSVERSE SECTION 1

DISCIPLINE: STRUCTURES

SHEET NAME: CBR27C18-BRG-TRN-002

SHEET 7 OF 148

Jan. 18 2016 02:25 pm v:\3400_ADC\CAD\SEGMENT E4\PLAN SHEETS\STRUCTURES\27C18\CBR27C18-BRG-TRN-002.dwg By: Victor.Madrid

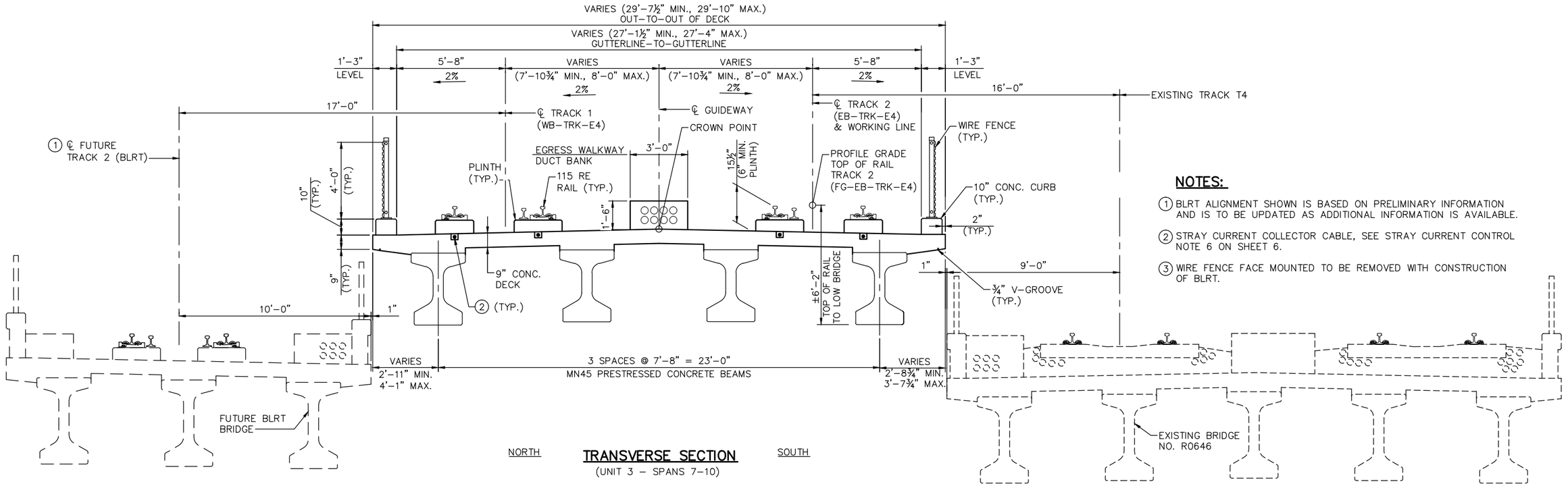

TRANSVERSE SECTION

(UNIT 3 – SPANS 7–10)

0 1.5' 3' 6'

NOTES:

1. BLRT ALIGNMENT SHOWN IS BASED ON PRELIMINARY INFORMATION AND IS TO BE UPDATED AS ADDITIONAL INFORMATION IS AVAILABLE.
2. STRAY CURRENT COLLECTOR CABLE, SEE STRAY CURRENT CONTROL NOTE 6 ON SHEET 6.
3. WIRE FENCE FACE MOUNTED TO BE REMOVED WITH CONSTRUCTION OF BLRT.

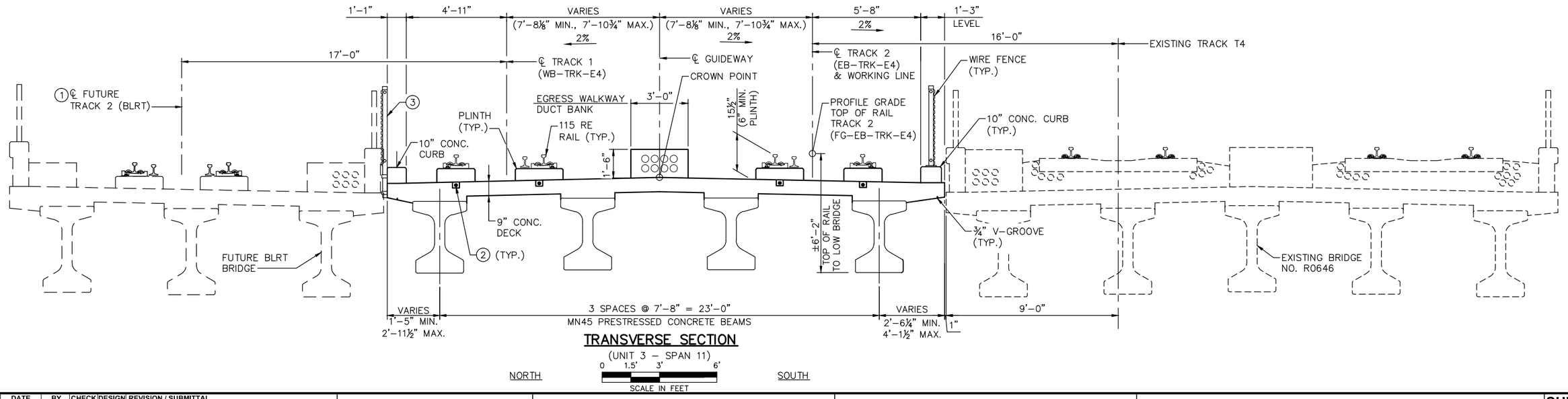

TRANSVERSE SECTION

(UNIT 3 – SPAN 11)

0 1.5' 3' 6'

SCALE IN FEET

NO.	DATE	BY	CHECK	DESIGN	REVISION / SUBMITTAL

DESIGNED BY: KR CHECKED BY: KJK

DRAWN BY: MSK CHECKED BY: KJK

AECOM Kimley»Horn

90% SUBMISSION - 01/22/16

METROPOLITAN COUNCIL

SOUTHWEST Green Line LRT Extension

CIVIL - VOLUME 4
5TH AVENUE AND 7TH STREET
BRIDGE 27C18
TRANSVERSE SECTION 2

DISCIPLINE: STRUCTURES

SHEET NAME: CBR27C18-BRG-TRN-003

SHEET 8 OF 148

Jan, 18 2016 02:26 pm v:\3400_ADC\CAD\SEGMENT E4\PLAN SHEETS\STRUCTURES\27C18\CBR27C18-BRG-TRN-003.dwg By: Victor.Madrid

NOTES:

1. DIMENSIONS MEASURED ALONG ℄ TRACK 2.
2. CONTROL POINT 1
   ℄ TRACK 2 (EB–TRK–E4) STA. 2951+05.41
   ℄ 5TH AVE N (5TH AVE N) STA. 0+52.25
   X = 525958.153
   Y = 169922.367
   ANGLE = 94°48'42.6" (T.T.C.)

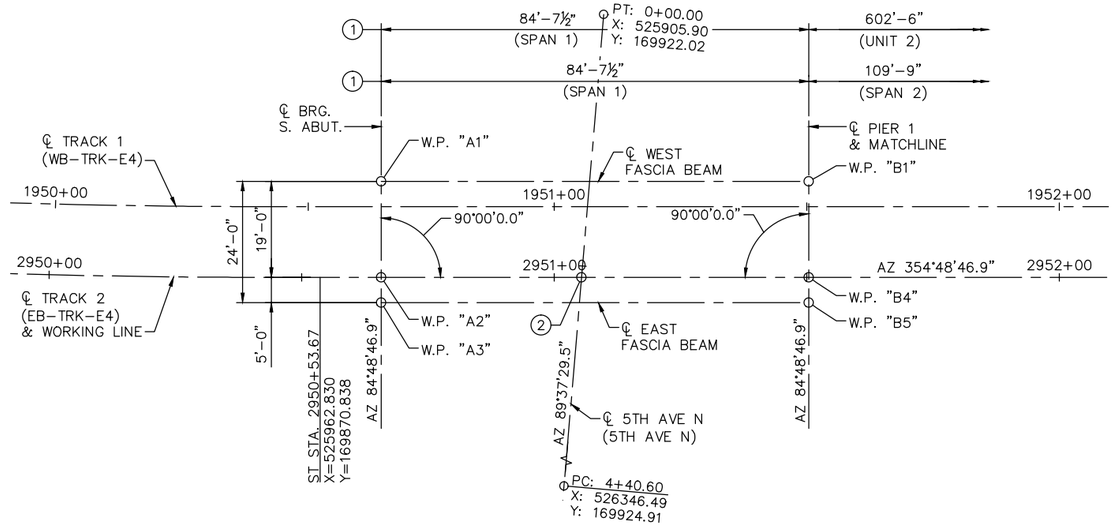

WORKING POINT LAYOUT
(SPAN 1)

DIMENSIONS BETWEEN WORKING POINTS								COORDINATES		ELEVATION				
POINT	STATION	A1	A2	A3	B1	B4	B5	X	Y	TOP OF RAIL	TOP OF DECK	TOP/DECK TO BR. SEAT	BRIDGE SEAT	POINT
A1	2950+65.76	--	19.00	–	84.62	86.73	87.96	525942.815	169881.158	--	848.03	4.979	843.05	A1
A2	2950+65.76	--	--	5.00	–	84.62	–	525961.738	169882.876	849.57	848.13	--	--	A2
A3	2950+65.76	--	--	–	87.96	–	84.63	525966.717	169883.328	--	848.03	4.979	843.05	A3
B1	2951+50.38	--	--	–	–	19.00	–	525935.165	169965.436	--	851.84	--	--	B1
B4	2951+50.38	--	--	–	–	–	5.00	525954.087	169967.154	853.37	851.94	--	--	B4
B5	2951+50.38	--	--	–	–	–	–	525959.066	169967.606	--	851.84	--	--	B5

TOP OF DECK TO BRIDGE SEAT						
	DECK THICKNESS	STOOL HEIGHT	BEAM HEIGHT	BEARING HEIGHT	TOTAL	
					INCHES	FEET
SOUTH ABUT.	9"	2 1/2"	45"	3 1/4"	59 3/4"	4.979
PIER 1	9"	2 1/2"	45"	4"	60 1/2"	5.042

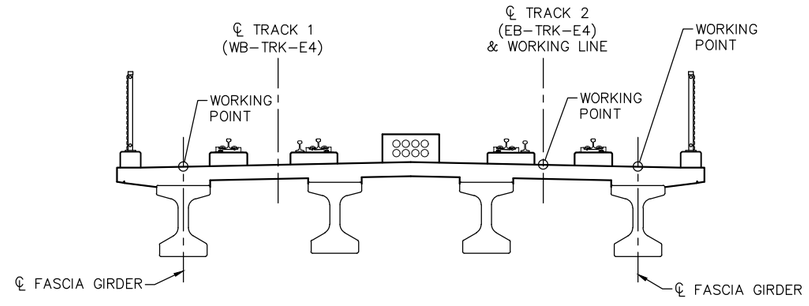

WORKING POINT LOCATIONS
(UNITS 1 & 3)

NO.	DATE	BY	CHECK	DESIGN	REVISION / SUBMITTAL

DESIGNED BY: KR | CHECKED BY: KJK
DRAWN BY: MSK | CHECKED BY: KJK

AECOM Kimley»Horn

90% SUBMISSION - 01/22/16

METROPOLITAN COUNCIL

SOUTHWEST Green Line LRT Extension

CIVIL - VOLUME 4G
5TH AVENUE AND 7TH STREET
BRIDGE 27C18
BRIDGE LAYOUT 1

DISCIPLINE: STRUCTURES
SHEET NAME: CBR27C18-BRG-WPL-001

SHEET 9 OF 148

Jan, 18 2016 02:27 pm V:\3400_ADC\CAD\SEGMENT E4\PLAN SHEETS\STRUCTURES\27C18\CBR27C18-BRG-WPL-001.dwg By: Victor.Madrid

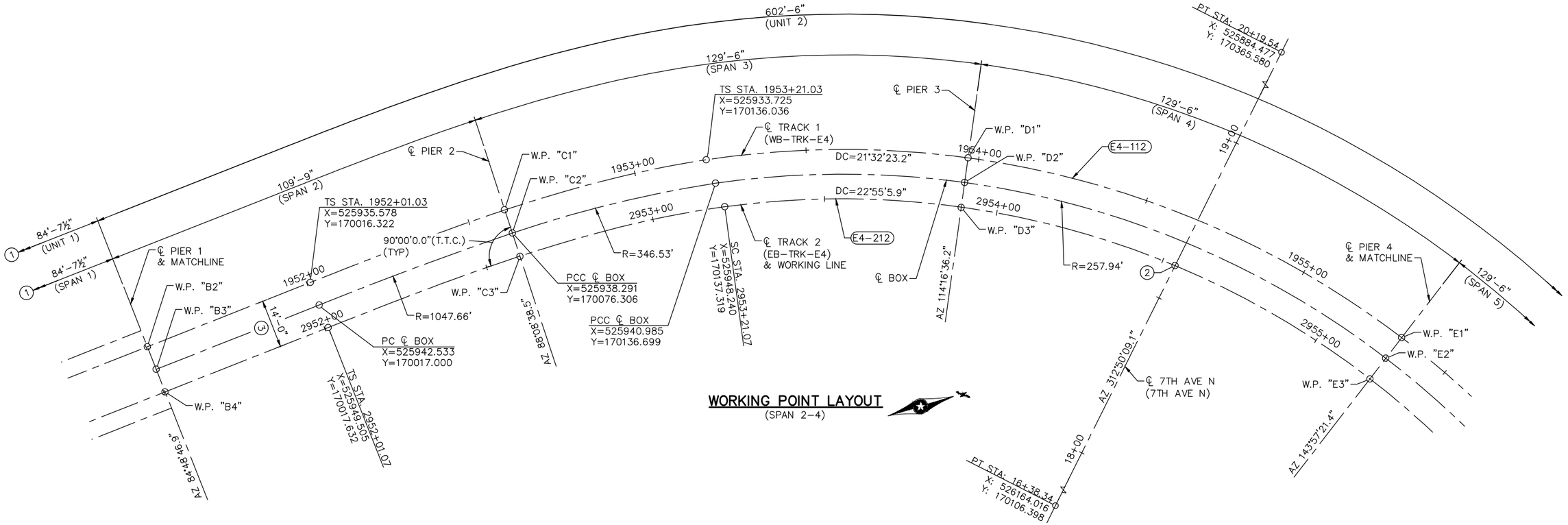

WORKING POINT LAYOUT
(SPAN 2-4)

DIMENSIONS BETWEEN WORKING POINTS														COORDINATES		ELEVATION				
POINT	STATION	B2	B3	B4	C1	C2	C3	D1	D2	D3	E1	E2	E3	X	Y	TOP OF RAIL	TOP OF DECK	TOP/DECK TO BR. SEAT	BRIDGE SEAT	POINT
B2	2951+50.38	--	7.00	–	110.55	110.43	110.77	–	--	238.57	--	--	--	525940.144	169965.888	--	851.92	--	--	B2
B3	2951+50.38	--	--	7.00	–	110.14	110.03	–	--	–	--	--	--	525947.116	169966.521	--	852.08	--	--	B3
B4	2951+50.38	--	--	–	111.29	–	109.73	241.63	--	–	--	--	--	525954.087	169967.154	853.37	851.92	--	--	B4
C1	2952+60.13	--	--	–	–	7.06	–	134.72	133.12	131.89	--	--	254.66	525931.270	170076.079	--	856.86	--	--	C1
C2	2952+60.13	--	--	–	–	–	6.99	–	131.49	129.90	--	--	--	525938.327	170076.307	--	857.02	--	--	C2
C3	2952+60.13	--	--	–	–	–	–	132.57	--	128.29	255.82	--	--	525945.309	170076.534	858.31	856.86	--	--	C3
D1	2953+89.63	--	--	–	–	–	–	–	7.18	–	135.58	133.82	132.47	525954.464	170208.782	--	861.39	--	--	D1
D2	2953+89.63	--	--	–	–	–	–	–	--	7.18	--	131.82	130.08	525961.012	170205.829	--	861.55	--	--	D2
D3	2953+89.63	--	--	–	–	–	–	–	--	–	132.70	--	128.06	525967.560	170202.876	862.85	861.39	--	--	D3
E1	2955+19.13	--	--	–	–	–	–	–	--	–	--	7.51	--	526039.515	170314.373	--	862.92	--	--	E1
E2	2955+19.13	--	--	–	–	–	–	–	--	–	--	--	7.50	526043.934	170308.300	--	863.08	--	--	E2
E3	2955+19.13	--	--	–	–	–	–	–	--	–	--	--	--	526048.350	170302.231	864.37	862.92	--	--	E3

TOP OF DECK TO BRIDGE SEAT				
	STRUCTURE DEPTH	BEARING HEIGHT	TOTAL	
			INCHES	FEET
PIER 1	90 1/4"	6"	96 1/4"	8.021

NOTES:

SEE SHEET 133 FOR TRACK CURVE DATA.

SEE SHEET 11 FOR WORKING POINT LAYOUT INFORMATION.

(1) DIMENSIONS MEASURED ALONG ℄ TRACK 2.

(2) CONTROL POINT 2
℄ TRACK 2 (EB-TRK-E4) STA. 2954+53.85
℄ 7TH ST N (7TH ST N) STA. 18+60.43
X = 526001.151
Y = 170257.402
ANGLE = 93°50'28.0" (T.T.C.)

(3) 14'-0": STA. 2951+50.38 TO STA. 2952+01.07

TRANSITION 14'-0" TO 16'-0": STA. 2952+01.07 TO STA. 2957+37.39

16'-0": STA 2957+37.39 TO 2957+52.88

NO.	DATE	BY	CHECK	DESIGN	REVISION / SUBMITTAL

DESIGNED BY: KR | CHECKED BY: KJK
DRAWN BY: MSK | CHECKED BY: KJK

AECOM Kimley»Horn

90% SUBMISSION - 01/22/16

METROPOLITAN COUNCIL

SOUTHWEST Green Line LRT Extension

CIVIL - VOLUME 4G
5TH AVENUE AND 7TH STREET
BRIDGE 27C18
BRIDGE LAYOUT 2

DISCIPLINE: STRUCTURES
SHEET NAME: CBR27C18-BRG-WPL-002

SHEET 10 OF 148

Jan, 19 2016 08:57 am v:\3400_ADC\CAD\SEGMENT E4\PLAN SHEETS\STRUCTURES\27C18\CBR27C18-BRG-WPL-002.dwg By: kevin.kimm

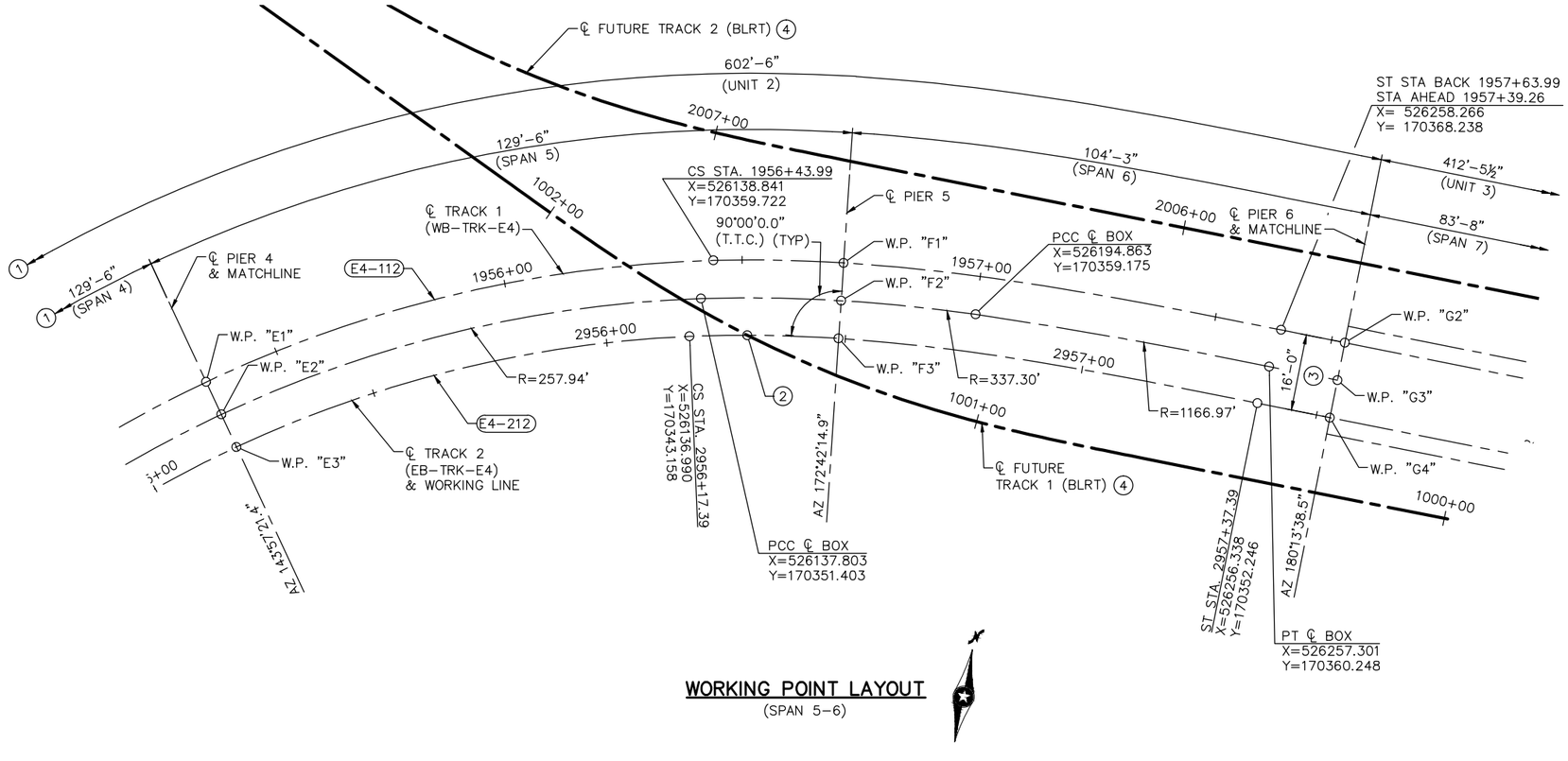

WORKING POINT LAYOUT
(SPAN 5-6)

NOTES:

SEE SHEET 133 FOR TRACK CURVE DATA.

(1) DIMENSIONS MEASURED ALONG ℄ TRACK 2.

(2) CONTROL POINT 3
℄ TRACK 2 (EB-TRK-E4) STA. 2956+29.51
℄ FUTURE TRACK 1 STA. 1001+51.41
X = 526148.834
Y = 170345.712
ANGLE = 26°26'28.0" (T.T.C.)

(3) 14'-0": STA. 2951+50.38 TO STA. 2952+01.07

TRANSITION 14'-0" TO 16'-0": STA. 2952+01.07 TO STA. 2957+37.39

16'-0": STA 2957+37.39 TO 2957+52.88

(4) BLRT ALIGNMENT SHOWN IS BASED ON PRELIMINARY INFORMATION AND WILL BE UPDATED AS ADDITIONAL INFORMATION IS AVAILABLE.

DIMENSIONS BETWEEN WORKING POINTS											COORDINATES		ELEVATION				
POINT	STATION	E1	E2	E3	F1	F2	F3	G2	G3	G4	X	Y	TOP OF RAIL	TOP OF DECK	TOP/DECK TO BR. SEAT	BRIDGE SEAT	POINT
E1	2955+19.13	--	7.51	--	135.76	134.01	132.72	–	–	235.37	526039.515	170314.373	--	862.92	--	--	E1
E2	2955+19.13	--	–	7.50	–	131.92	130.21	–	–	--	526043.934	170308.300	--	863.08	--	--	E2
E3	2955+19.13	--	–	--	132.82	–	128.09	233.06	–	--	526048.350	170302.231	864.37	862.92	--	--	E3
F1	2956+48.63	--	–	--	–	7.93	–	106.25	106.24	106.83	526165.697	170364.450	--	861.43	--	--	F1
F2	2956+48.63	--	–	--	–	–	7.93	–	105.21	105.21	526166.704	170356.584	--	861.59	--	--	F2
F3	2956+48.63	--	–	--	–	–	–	105.98	–	104.17	526167.713	170348.715	862.89	861.43	--	--	F3
G2	2957+52.88	--	–	--	–	–	–	–	8.00	--	526271.886	170368.187	--	858.04	--	--	G2
G3	2957+52.88	--	–	--	–	–	–	–	–	8.00	526271.855	170360.187	--	858.20	--	--	G3
G4	2957+52.88	--	–	--	–	–	–	–	–	--	526271.824	170352.184	859.49	858.04	--	--	G4

TOP OF DECK TO BRIDGE SEAT				
	STRUCTURE DEPTH	BEARING HEIGHT	TOTAL	
			INCHES	FEET
PIER 6	90 1/4"	6"	96 1/4"	8.021

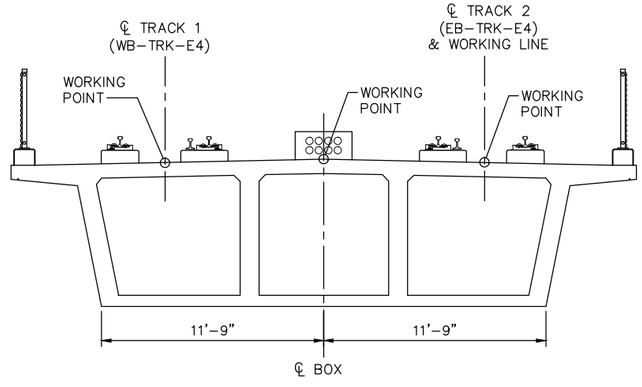

WORKING POINT LOCATIONS
(UNITS 2)

NO.	DATE	BY	CHECK	DESIGN	REVISION / SUBMITTAL

DESIGNED BY: KR CHECKED BY: KJK
DRAWN BY: MSK CHECKED BY: KJK

AECOM Kimley»Horn

90% SUBMISSION - 01/22/16

METROPOLITAN COUNCIL

SOUTHWEST Green Line LRT Extension

CIVIL - VOLUME 4G
5TH AVENUE AND 7TH STREET
BRIDGE 27C18
BRIDGE LAYOUT 3

DISCIPLINE: STRUCTURES
SHEET NAME: CBR27C18-BRG-WPL-003

SHEET 11 OF 148

Jan, 18 2016 02:28 pm V:\3400_ADC\CAD\SEGMENT E4\PLAN SHEETS\STRUCTURES\27C18\CBR27C18-BRG-WPL-003.dwg By: Victor.Madrid

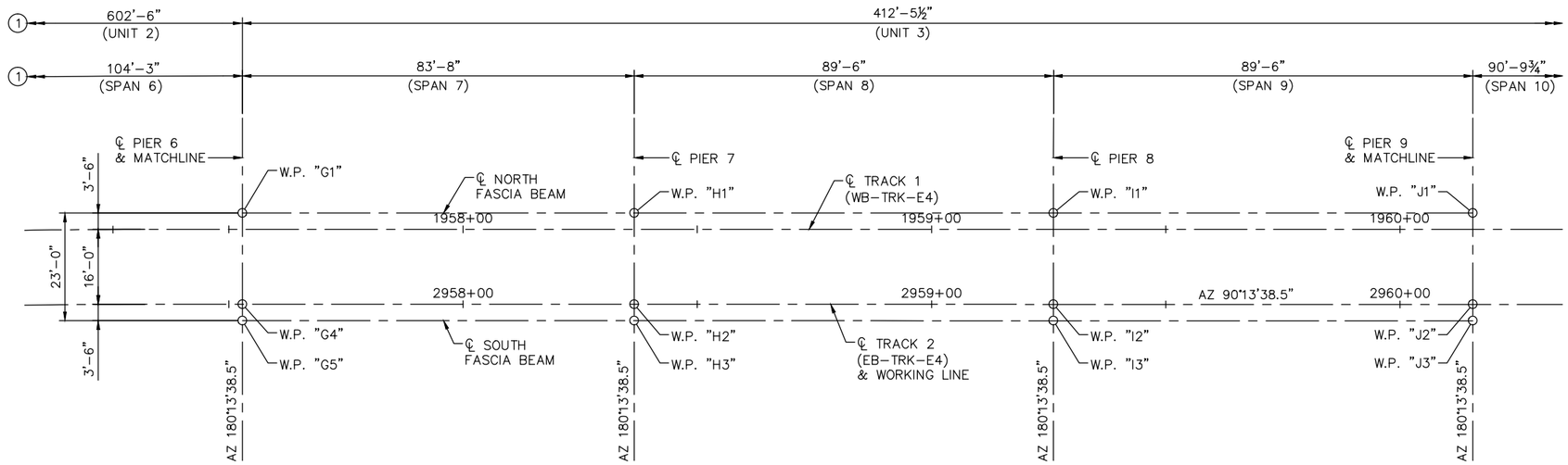

WORKING POINT LAYOUT
(SPAN 7-9)

DIMENSIONS BETWEEN WORKING POINTS														COORDINATES		ELEVATION				
POINT	STATION	G1	G4	G5	H1	H2	H3	I1	I2	I3	J1	J2	J3	X	Y	TOP OF RAIL	TOP OF DECK	TOP/DECK TO BR. SEAT	BRIDGE SEAT	POINT
G1	2957+52.88	--	19.50	–	83.67	85.91	86.77	–	--	174.69	--	--	--	526271.902	170371.684	--	857.97	--	--	G1
G4	2957+52.88	--	--	3.50	–	83.67	83.74	–	--	–	--	--	--	526271.824	170352.184	859.49	858.04	--	--	G4
G5	2957+52.88	--	--	–	86.77	–	83.67	174.69	--	–	--	--	--	526271.810	170348.684	--	857.97	--	--	G5
H1	2958+36.55	--	--	–	–	19.50	–	89.50	91.60	92.41	--	--	180.47	526355.566	170371.352	--	854.23	5.198	849.03	H1
H2	2958+36.55	--	--	–	–	–	3.50	–	89.50	89.57	--	--	--	526355.489	170351.852	855.76	854.30	--	--	H2
H3	2958+36.54	--	--	–	–	–	–	92.41	--	89.50	180.47	--	--	526355.475	170348.352	--	854.23	5.198	849.03	H3
I1	2959+26.05	--	--	–	–	–	–	–	19.50	–	89.50	91.60	92.41	526445.066	170370.997	--	850.21	4.979	845.23	I1
I2	2959+26.05	--	--	–	–	–	–	–	--	3.50	--	89.50	89.57	526444.988	170351.497	851.73	850.28	--	--	I2
I3	2959+26.05	--	--	–	–	–	–	–	--	–	92.41	--	89.50	526444.975	170347.997	--	850.21	4.979	845.23	I3
J1	2960+15.55	--	--	–	–	–	–	–	--	–	--	19.50	--	526534.565	170370.642	--	846.53	4.979	841.55	J1
J2	2960+15.55	--	--	–	–	–	–	–	--	–	--	--	3.50	526534.488	170351.142	848.06	846.60	--	--	J2
J3	2960+15.55	--	--	–	–	–	–	–	--	–	--	--	--	526534.474	170347.642	--	846.53	4.979	841.55	J3

TOP OF DECK TO BRIDGE SEAT						
	DECK THICKNESS	STOOL HEIGHT	BEAM HEIGHT	BEARING HEIGHT	TOTAL	
					INCHES	FEET
PIER 6	9"	2 1/2"	45"	7 3/4"	64 1/4"	5.354
PIER 7	9"	2 1/2"	45"	5 7/8"	62 3/8"	5.198
PIER 8	9"	2 1/2"	45"	3 1/4"	59 3/4"	4.979
PIER 9	9"	2 1/2"	45"	3 1/4"	59 3/4"	4.979

NOTES:

SEE SHEET 9 FOR WORKING POINT LAYOUT INFORMATION.

(1) DIMENSIONS MEASURED ALONG ℄ TRACK 2.

NO.	DATE	BY	CHECK	DESIGN	REVISION / SUBMITTAL

DESIGNED BY: KR CHECKED BY: KJK
DRAWN BY: MSK CHECKED BY: KJK

AECOM Kimley»Horn

90% SUBMISSION - 01/22/16

METROPOLITAN COUNCIL

SOUTHWEST Green Line LRT Extension

CIVIL - VOLUME 4G
5TH AVENUE AND 7TH STREET
BRIDGE 27C18
BRIDGE LAYOUT 4

DISCIPLINE: STRUCTURES
SHEET NAME: CBR27C18-BRG-WPL-004

SHEET 12 OF 148

Jan, 18 2016 02:29 pm v:\3400_ADC\CAD\SEGMENT E4\PLAN SHEETS\STRUCTURES\27C18\CBR27C18-BRG-WPL-004.dwg By: Victor.Madrid

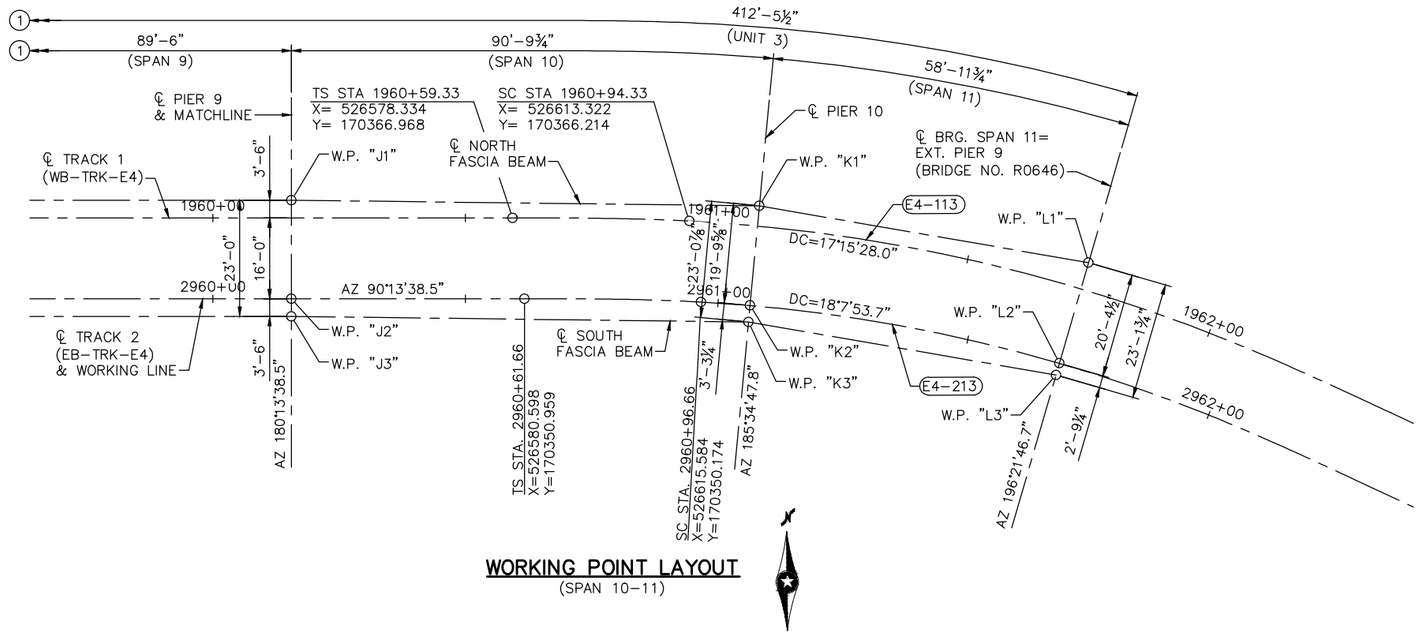

WORKING POINT LAYOUT
(SPAN 10-11)

DIMENSIONS BETWEEN WORKING POINTS											COORDINATES		ELEVATION				
POINT	STATION	J1	J2	J3	K1	K2	K3	L1	L2	L3	X	Y	TOP OF RAIL	TOP OF DECK	TOP/DECK TO BR. SEAT	BRIDGE SEAT	POINT
J1	2960+15.55	--	19.50	–	92.63	93.14	93.63	–	--	151.82	526534.565	170370.642	--	846.53	4.979	841.55	J1
J2	2960+15.55	--	--	3.50	–	90.79	90.59	–	--	–	526534.488	170351.142	848.06	846.60	--	--	J2
J3	2960+15.55	--	--	–	95.17	–	90.48	154.80	--	–	526534.474	170347.642	--	846.53	4.979	841.55	J3
K1	2961+06.50	--	--	–	–	19.80	–	62.68	63.73	64.37	526627.185	170369.156	--	844.77	5.250	839.52	K1
K2	2961+06.36	--	--	–	–	–	3.27	–	58.90	58.68	526625.260	170349.450	846.29	844.84	--	--	K2
K3	2961+06.34	--	--	–	–	–	–	65.10	--	58.34	526624.942	170346.191	--	844.77	5.250	839.52	K3
L1	2961+65.51	--	--	–	–	–	–	–	20.37	–	526688.912	170358.258	--	844.78	5.354	839.43	L1
L2	2961+65.34	--	--	–	–	–	–	–	--	2.77	526683.172	170338.709	846.30	844.80	--	--	L2
L3	2961+65.32	--	--	–	–	–	–	–	--	–	526682.390	170336.047	--	844.78	5.354	839.43	L3

TOP OF DECK TO BRIDGE SEAT						
	DECK THICKNESS	STOOL HEIGHT	BEAM HEIGHT	BEARING HEIGHT	TOTAL	
					INCHES	FEET
PIER 9	9"	2 1/2"	45"	3 1/4"	59 3/4"	4.979
PIER 10	9"	2 1/2"	45"	6 1/2"	63"	5.250
EXST PIER 9	9"	2 1/2"	45"	7 3/4"	64 1/4"	5.354

NOTES:

SEE SHEET 9 FOR WORKING POINT LAYOUT INFORMATION.

SEE SHEET 133 FOR TRACK CURVE DATA.

(1) DIMENSIONS MEASURED ALONG ℄ TRACK 2.

NO.	DATE	BY	CHECK	DESIGN	REVISION / SUBMITTAL

DESIGNED BY: KR CHECKED BY: KJK
DRAWN BY: MSK CHECKED BY: KJK

AECOM Kimley»Horn

90% SUBMISSION - 01/22/16

METROPOLITAN COUNCIL

SOUTHWEST Green Line LRT Extension

CIVIL - VOLUME 4G
5TH AVENUE AND 7TH STREET
BRIDGE 27C18
BRIDGE LAYOUT 5

DISCIPLINE: STRUCTURES
SHEET NAME: CBR27C18-BRG-WPL-005

SHEET 13 OF 148

Jan, 19 2016 08:57 am v:\3400_ADC\CAD\SEGMENT E4\PLAN SHEETS\STRUCTURES\27C18\CBR27C18-BRG-WPL-005.dwg By: kevin.kimm

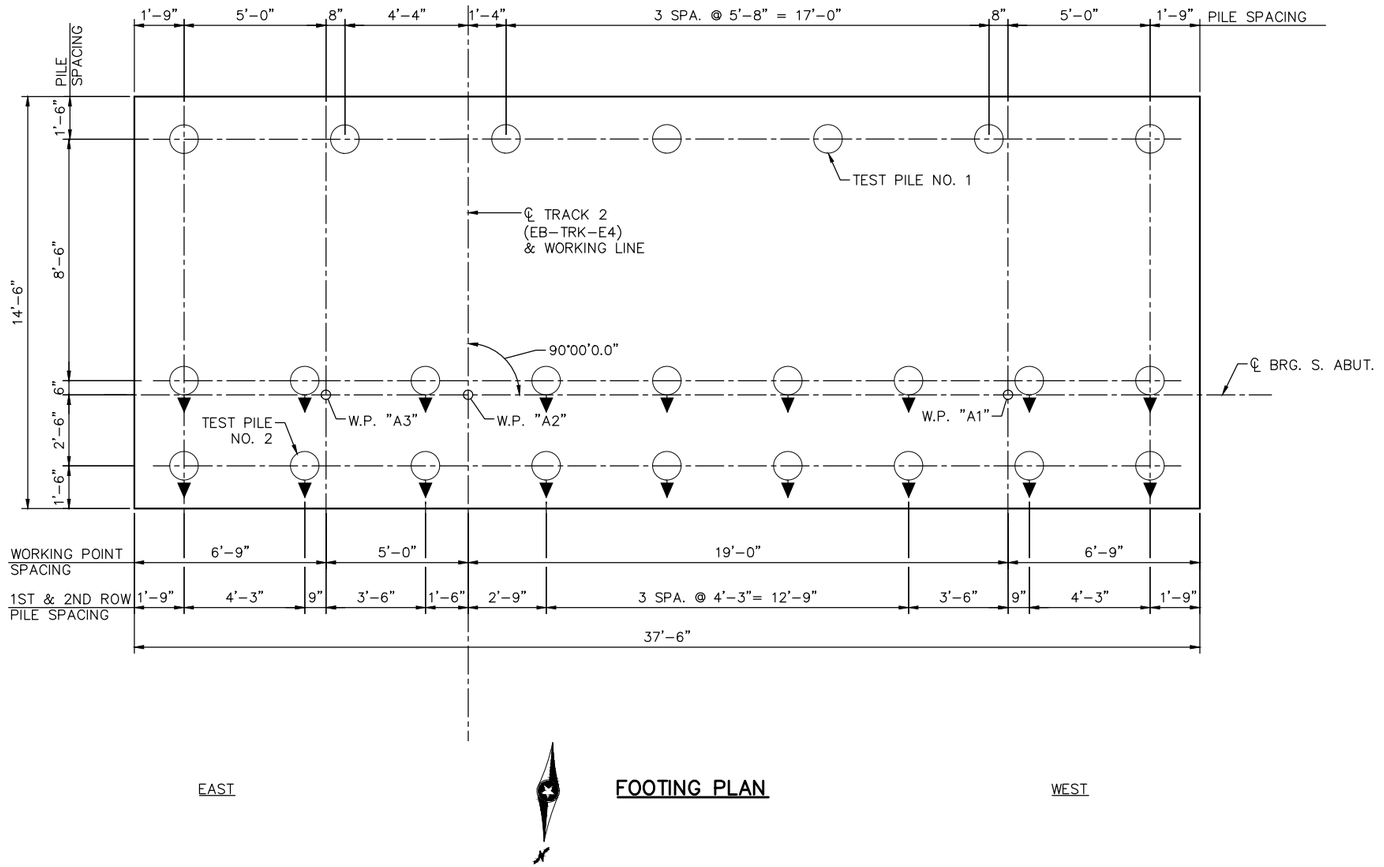

EAST

FOOTING PLAN

WEST

SOUTH ABUTMENT COMPUTED PILE LOAD - TONS/PILE	
FACTORED DEAD LOAD + EARTH PRESSURE	58.7
FACTORED LIVE LOAD	31.5
* FACTORED DESIGN LOAD	90.2
* BASED ON STRENGTH I LOAD COMBINATION.	

SOUTH ABUTMENT REQUIRED NOMINAL PILE BEARING RESISTANCE FOR CIP PILES Rn - TONS/PILE		
FIELD CONTROL METHOD	φdyn	* Rn
PDA	0.65	139
* Rn = (FACTORED DESIGN LOAD) / φdyn		

GENERAL PILE NOTES

2 C-I-P CONCRETE TEST PILES 100 FT. LONG
23 C-I-P CONCRETE PILES EST. LENGTH 90 FT.
25 C-I-P CONCRETE PILES REQ'D FOR SOUTH ABUTMENT.

NOTES

PILE SPACING SHOWN IS AT BOTTOM OF FOOTING.

PILES MARKED THUS ◯► TO BE BATTERED 3" PER FOOT IN DIRECTION SHOWN.

PILES TO HAVE A NOMINAL DIAMETER OF 12".

FOR PILE SPLICE DETAILS SEE DETAIL B201.

NO.	DATE	BY	CHECK	DESIGN	REVISION / SUBMITTAL

DESIGNED BY: DJL CHECKED BY: KJK
DRAWN BY: MSK CHECKED BY: KJK

AECOM Kimley»Horn

90% SUBMISSION - 01/22/16

METROPOLITAN COUNCIL

SOUTHWEST Green Line LRT Extension

CIVIL - VOLUME 4G
5TH AVENUE AND 7TH STREET
BRIDGE 27C18
SOUTH ABUTMENT DETAILS 1

DISCIPLINE: STRUCTURES
SHEET NAME: CBR27C18-BRG-ABT-001

SHEET 14 OF 148

Jan, 19 2016 08:57 am V:\3400_ADC\CAD\SEGMENT E4\PLAN SHEETS\STRUCTURES\27C18\CBR27C18-BRG-ABT-001.dwg By: Victor.Madrid

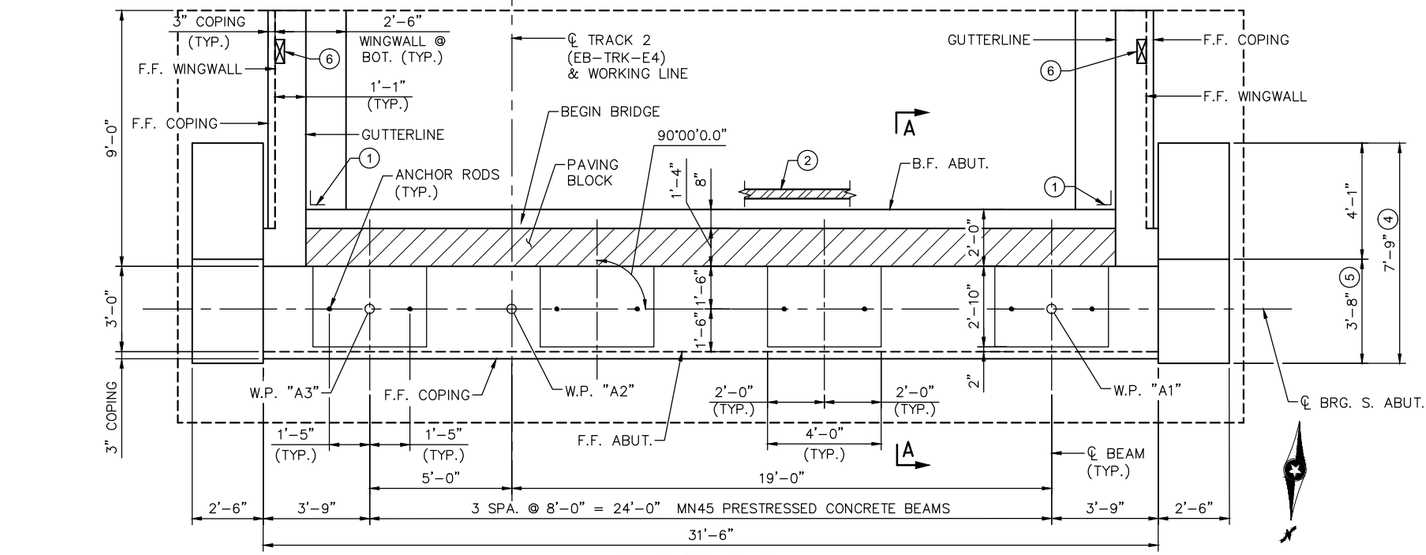

ABUTMENT PLAN

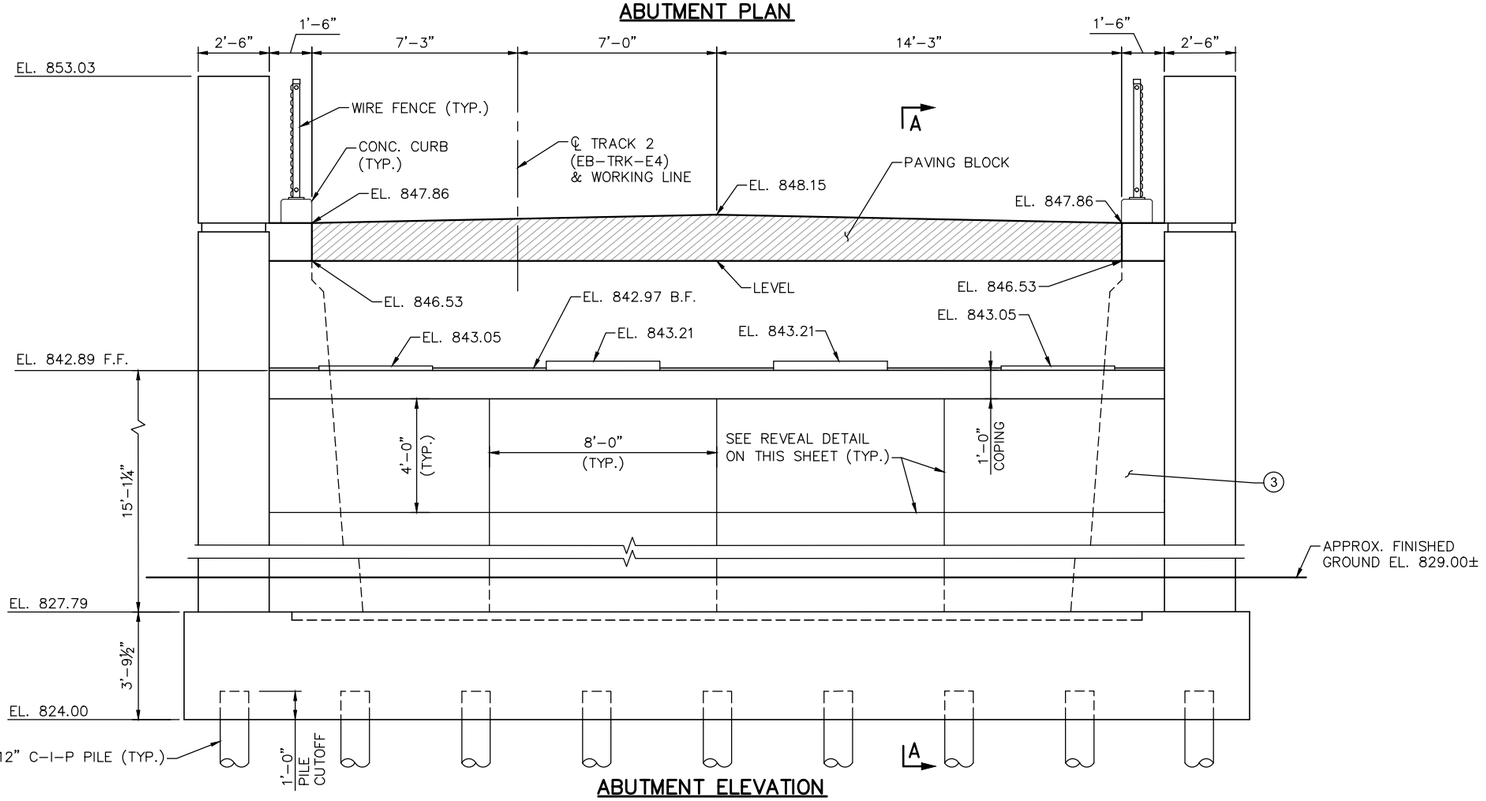

ABUTMENT ELEVATION

NOTES

FOR SECTION A-A, SEE SHEET 17.

PAVING BLOCK HATCHED AREA INDICATES THAT PORTION TO BE PLACED WITH THE SUPERSTRUCTURE CONCRETE.

(1) MEMBRANE WATERPROOFING SYSTEM PER SPEC. 2481.3.B.

(2) PERFORATED PIPE, SEE DETAIL B910 FOR DRAINAGE DETAILS.

(3) ARCHITECTURAL CONCRETE TEXTURE (RECTANGULAR GRID) WITH ARCHITECTURAL FINISH (SINGLE COLOR).

(4) DIMENSION AT TOP OF FOOTING.

(5) DIMENSION AT TOP OF PILASTER.

(6) STRAY CURRENT BOND TEST STATION ON FACE OF WINGWALL. SEE STRAY CURRENT CONTROL NOTE 15 ON SHEET 6.

(7) ELEVATIONS SHOWN ARE AT BEGIN BRIDGE.

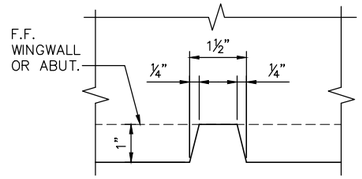

REVEAL DETAIL

NO.	DATE	BY	CHECK	DESIGN	REVISION / SUBMITTAL

DESIGNED BY: DJL CHECKED BY: KJK
DRAWN BY: MSK CHECKED BY: KJK

AECOM Kimley»Horn

90% SUBMISSION - 01/22/16

METROPOLITAN COUNCIL

SOUTHWEST Green Line LRT Extension

CIVIL - VOLUME 4G
5TH AVENUE AND 7TH STREET
BRIDGE 27C18
SOUTH ABUTMENT DETAILS 2

DISCIPLINE: STRUCTURES
SHEET NAME: CBR27C18-BRG-ABT-002

SHEET 15 OF 148

Jan. 18 2016 02:30 pm V:\3400_ADC\CAD\SEGMENT E4\PLAN SHEETS\STRUCTURES\27C18\CBR27C18-BRG-ABT-002.dwg By: Victor.Madrid

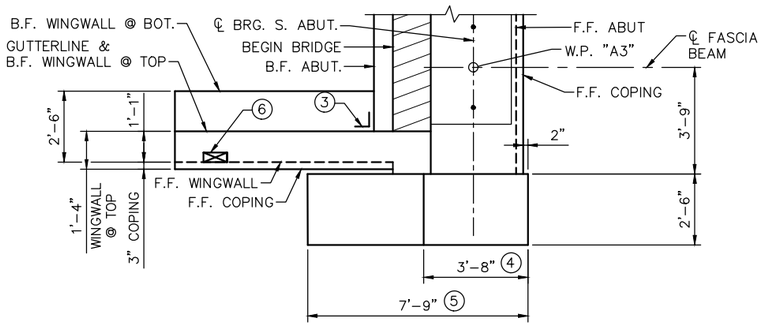

EAST PILASTER PLAN

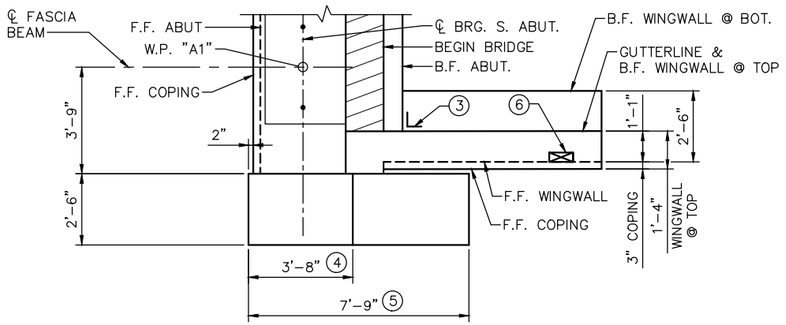

WEST PILASTER PLAN

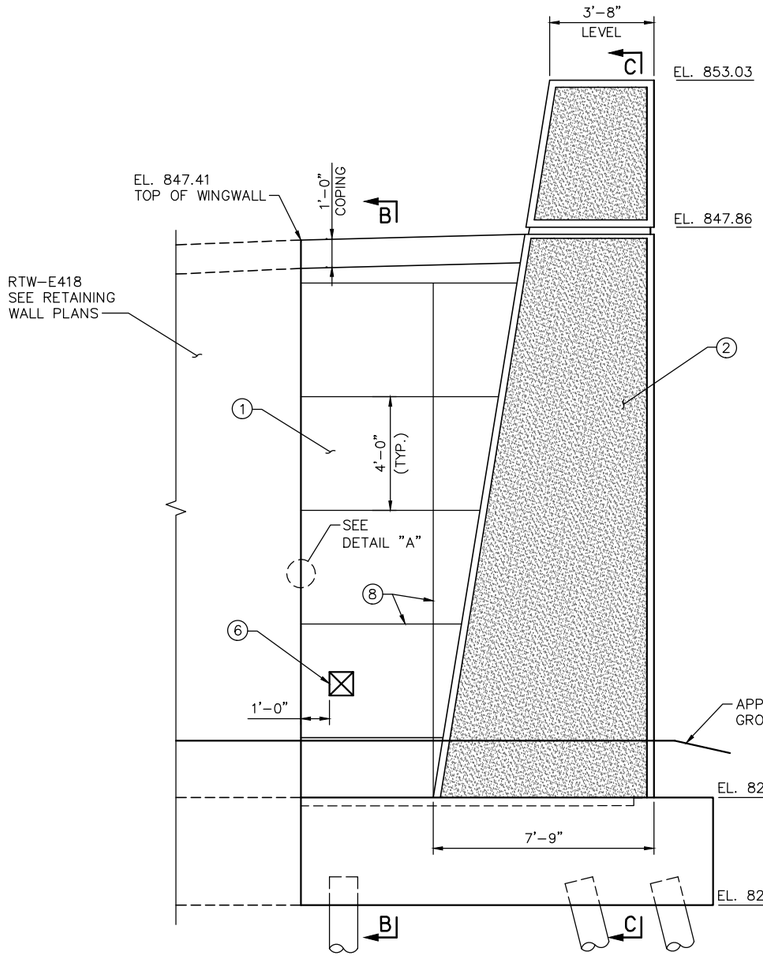

EAST PILASTER ELEVATION

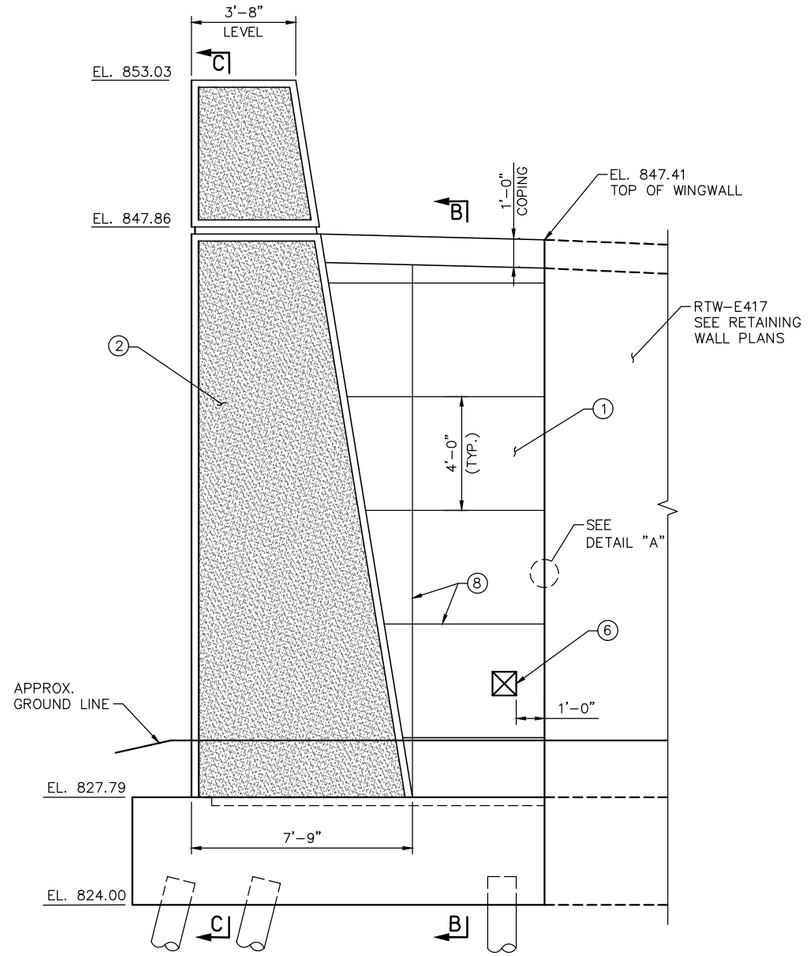

WEST PILASTER ELEVATION

NOTES:

FOR SECTION B–B AND C–C SEE SHEET 17.

1. ARCHITECTURAL CONCRETE TEXTURE (RECTANGULAR GRID) WITH ARCHITECTURAL FINISH (SINGLE COLOR).
2. ARCHITECTURAL CONCRETE TEXTURE (LIMESTONE) WITH ARCHITECTURAL SURFACE FINISH (SINGLE COLOR). THE APPROXIMATE THICKNESS OF ARCHITECTURAL CONCRETE IS 0.5".
3. MEMBRANE WATERPROOFING SYSTEM PER SPEC. 2481.3.B.
4. TOP OF PILASTER
5. BOTTOM OF PILASTER
6. STRAY CURRENT BOND TEST STATION ON FACE OF WINGWALL. SEE STRAY CURRENT CONTROL NOTE 15 ON SHEET 6.
7. JOINT FILLER SHALL BE CORK PER SPEC. 2401.3E3
8. SEE REVEAL DETAIL ON SHEET 15

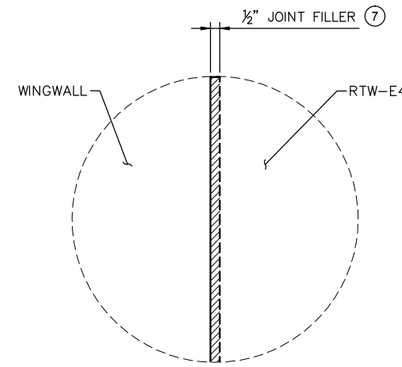

DETAIL A

(WEST WINGWALL SHOWN)

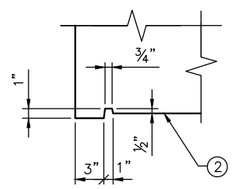

AESTHETIC DETAIL

NO.	DATE	BY	CHECK	DESIGN	REVISION / SUBMITTAL

DESIGNED BY: DJL | CHECKED BY: KJK
DRAWN BY: MSK | CHECKED BY: KJK

AECOM Kimley»Horn

90% SUBMISSION - 01/22/16

METROPOLITAN COUNCIL

SOUTHWEST Green Line LRT Extension

CIVIL - VOLUME 4G
5TH AVENUE AND 7TH STREET
BRIDGE 27C18
SOUTH ABUTMENT DETAILS 3

DISCIPLINE: STRUCTURES
SHEET NAME: CBR27C18-BRG-ABT-003

SHEET 16 OF 148

Jan, 18 2016 02:31 pm V:\3400_ADC\CAD\SEGMENT E4\PLAN SHEETS\STRUCTURES\27C18\CBR27C18-BRG-ABT-003.dwg By: Victor.Madrid

NOTES:

PAVING BLOCK HATCHED AREA INDICATES THAT PORTION TO BE PLACED WITH THE SUPERSTRUCTURE CONCRETE.

SEE SHEET 15 FOR LOCATION OF SECTION A–A.

SEE SHEET 16 FOR LOCATION OF SECTION B–B AND SECTION C–C.

(1) MEMBRANE WATERPROOFING SYSTEM PER SPEC. 2481.3.B.

(2) ARCHITECTURAL CONCRETE TEXTURE (RECTANGULAR GRID) WITH ARCHITECTURAL FINISH (SINGLE COLOR).

(3) SEE REVEAL DETAIL ON SHEET 15.

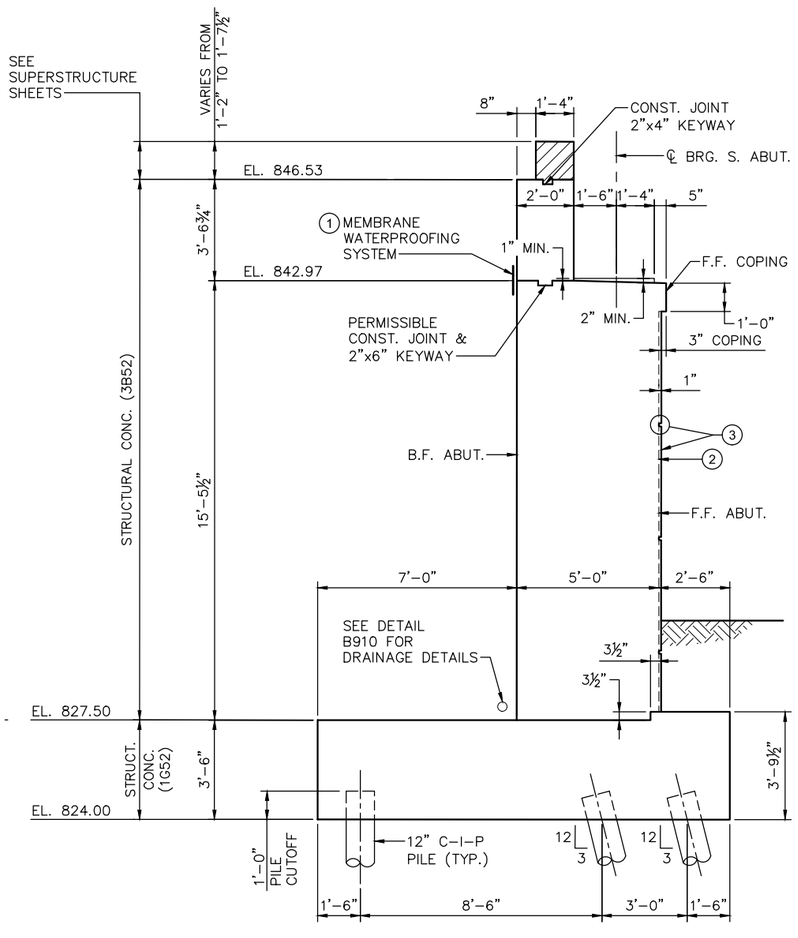

SECTION A–A

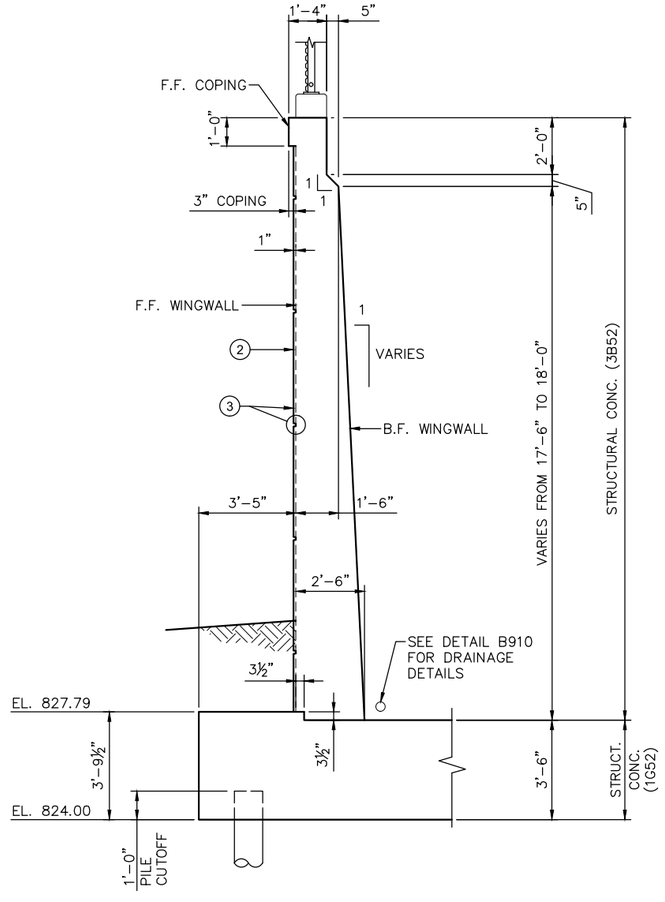

SECTION B–B

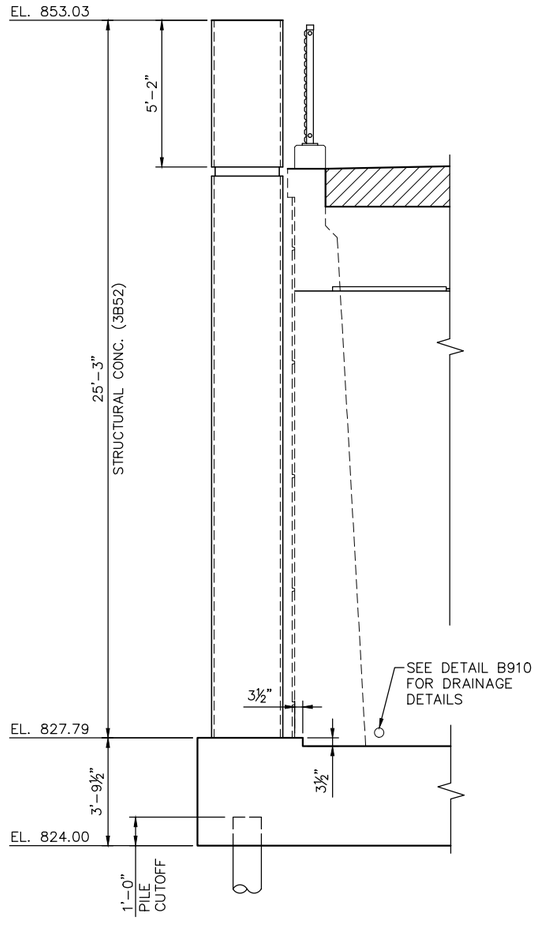

SECTION C–C

NO.	DATE	BY	CHECK	DESIGN	REVISION / SUBMITTAL

DESIGNED BY: DJL | CHECKED BY: KJK
DRAWN BY: MSK | CHECKED BY: KJK

AECOM Kimley»Horn

90% SUBMISSION - 01/22/16

METROPOLITAN COUNCIL

SOUTHWEST Green Line LRT Extension

CIVIL - VOLUME 4G
5TH AVENUE AND 7TH STREET
BRIDGE 27C18
SOUTH ABUTMENT DETAILS 4

DISCIPLINE: STRUCTURES

SHEET NAME: CBR27C18-BRG-ABT-004

SHEET 17 OF 148

Jan, 18 2016 02:31 pm v:\3400_ADC\CAD\SEGMENT E4\PLAN SHEETS\STRUCTURES\27C18\CBR27C18-BRG-ABT-004.dwg By: Victor.Madrid

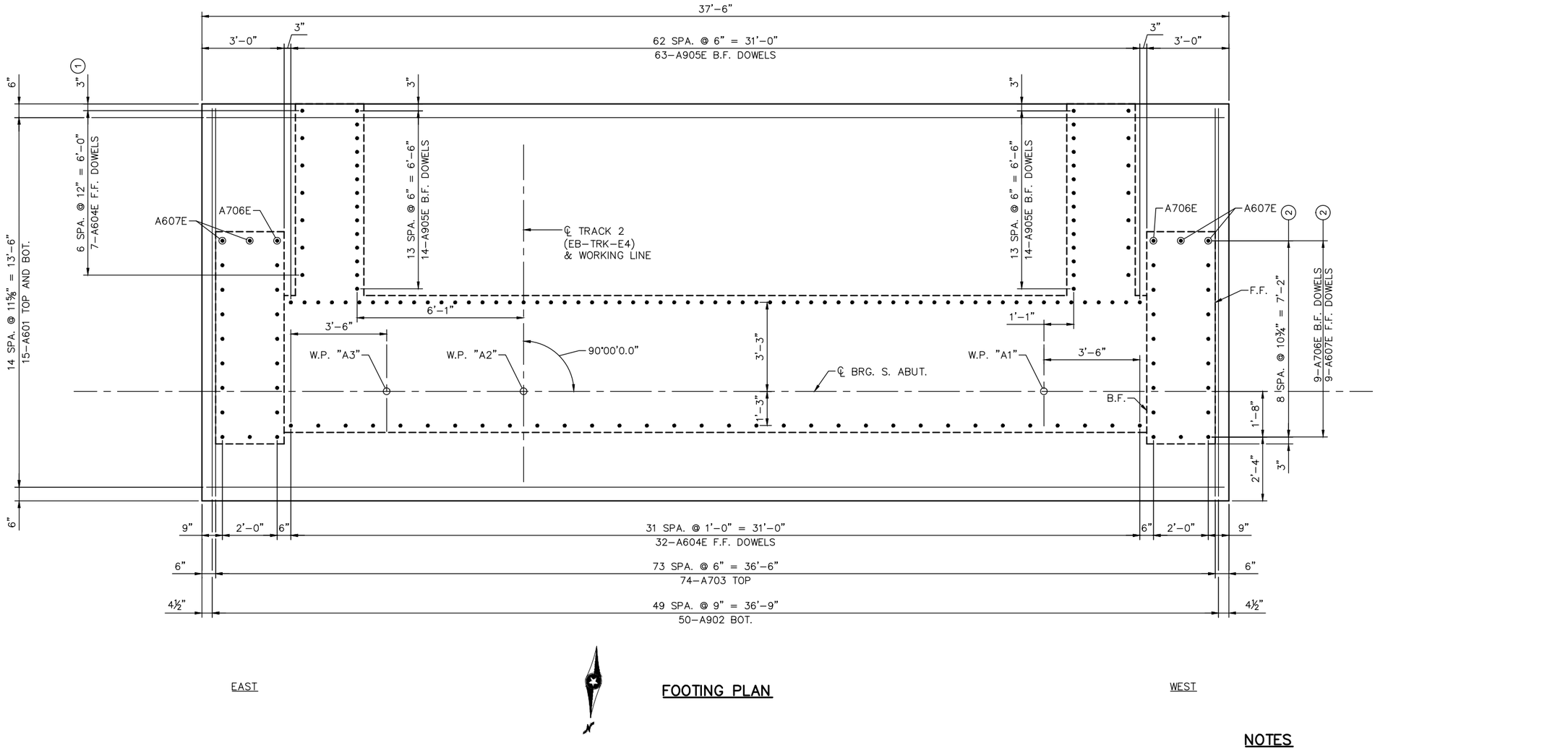

EAST

WEST

FOOTING PLAN

NOTES

F.F. – DENOTES FRONT FACE
B.F. – DENOTES BACK FACE
E.F. – DENOTES EACH FACE

(1) F.F. REINFORCEMENT DOWELS FOR WEST WINGWALL SIMILAR.

(2) REINFORCEMENT DOWELS FOR EAST PILASTER SIMILAR.

NO.	DATE	BY	CHECK	DESIGN	REVISION / SUBMITTAL

DESIGNED BY: DJL | CHECKED BY: KJK
DRAWN BY: MSK | CHECKED BY: KJK

AECOM Kimley»Horn

90% SUBMISSION - 01/22/16

METROPOLITAN COUNCIL

SOUTHWEST Green Line LRT Extension

CIVIL - VOLUME 4G
5TH AVENUE AND 7TH STREET
BRIDGE 27C18
SOUTH ABUTMENT REINFORCEMENT 1

DISCIPLINE: STRUCTURES
SHEET NAME: CBR27C18-BRG-ABT-005-1

SHEET 18 OF 148

Jan, 18 2016 02:32 pm V:\3400_ADC\CAD\SEGMENT E4\PLAN SHEETS\STRUCTURES\27C18\CBR27C18-BRG-ABT-005.dwg By: Victor.Madrid

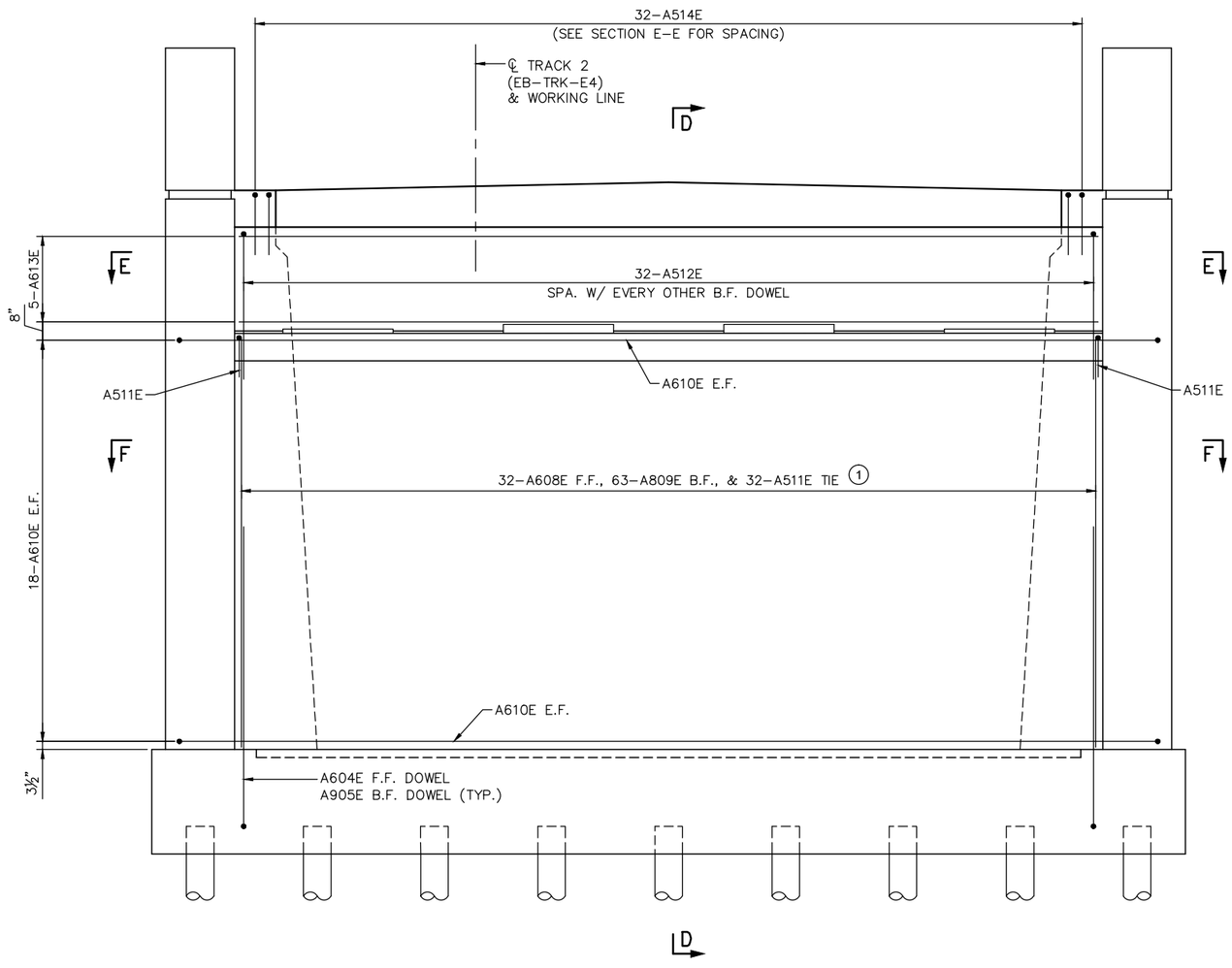

ABUTMENT ELEVATION

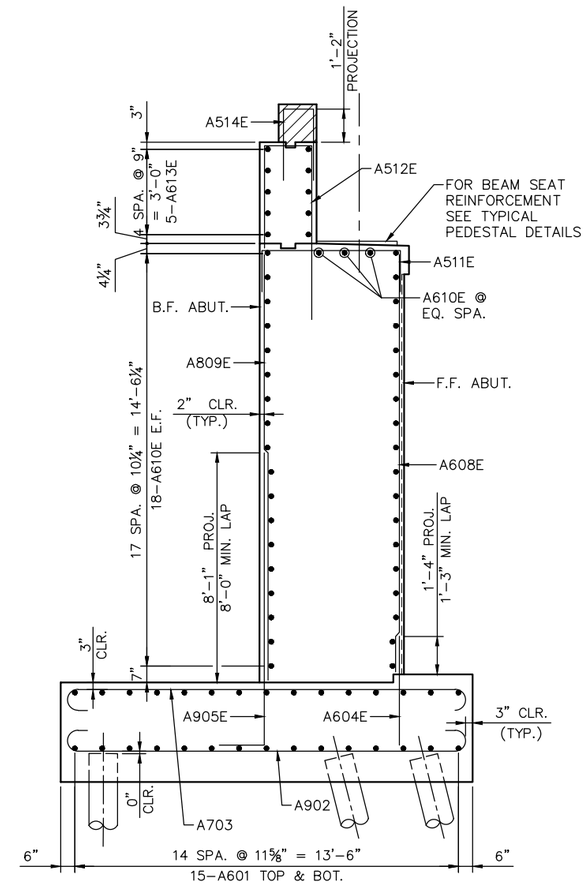

SECTION D–D

NOTES

F.F. – DENOTES FRONT FACE
B.F. – DENOTES BACK FACE
E.F. – DENOTES EACH FACE

SEE SHEET 20 FOR SECTION E–E AND F–F.

SEE SHEET 22 FOR PILASTER REINFORCEMENT DETAILS.

(1) SPACED WITH FOOTING DOWELS.

NO.	DATE	BY	CHECK	DESIGN	REVISION / SUBMITTAL

DESIGNED BY: DJL | CHECKED BY: KJK
DRAWN BY: MSK | CHECKED BY: KJK

AECOM Kimley»Horn

90% SUBMISSION - 01/22/16

METROPOLITAN COUNCIL

SOUTHWEST Green Line LRT Extension

CIVIL - VOLUME 4G
5TH AVENUE AND 7TH STREET
BRIDGE 27C18
SOUTH ABUTMENT REINFORCEMENT 2

DISCIPLINE: STRUCTURES
SHEET NAME: CBR27C18-BRG-ABT-005-2

SHEET 19 OF 148

Jan, 18 2016 02:32 pm V:\3400_ADC\CAD\SEGMENT E4\PLAN SHEETS\STRUCTURES\27C18\CBR27C18-BRG-ABT-005.dwg By: Victor.Madrid

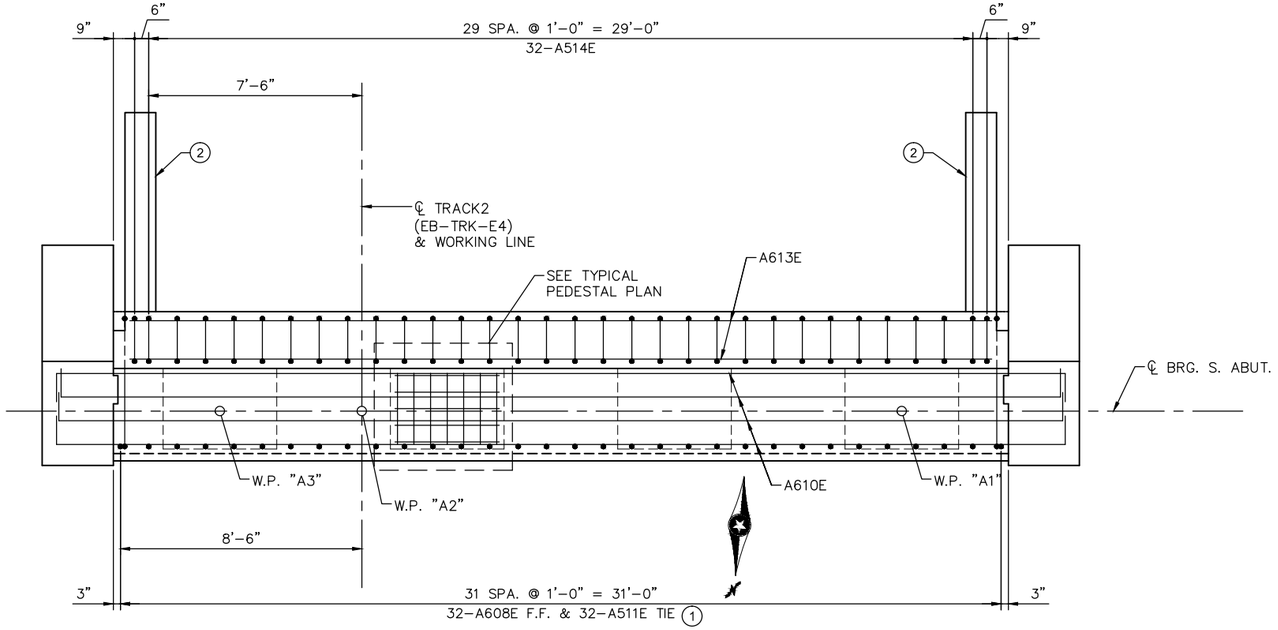

SECTION E-E

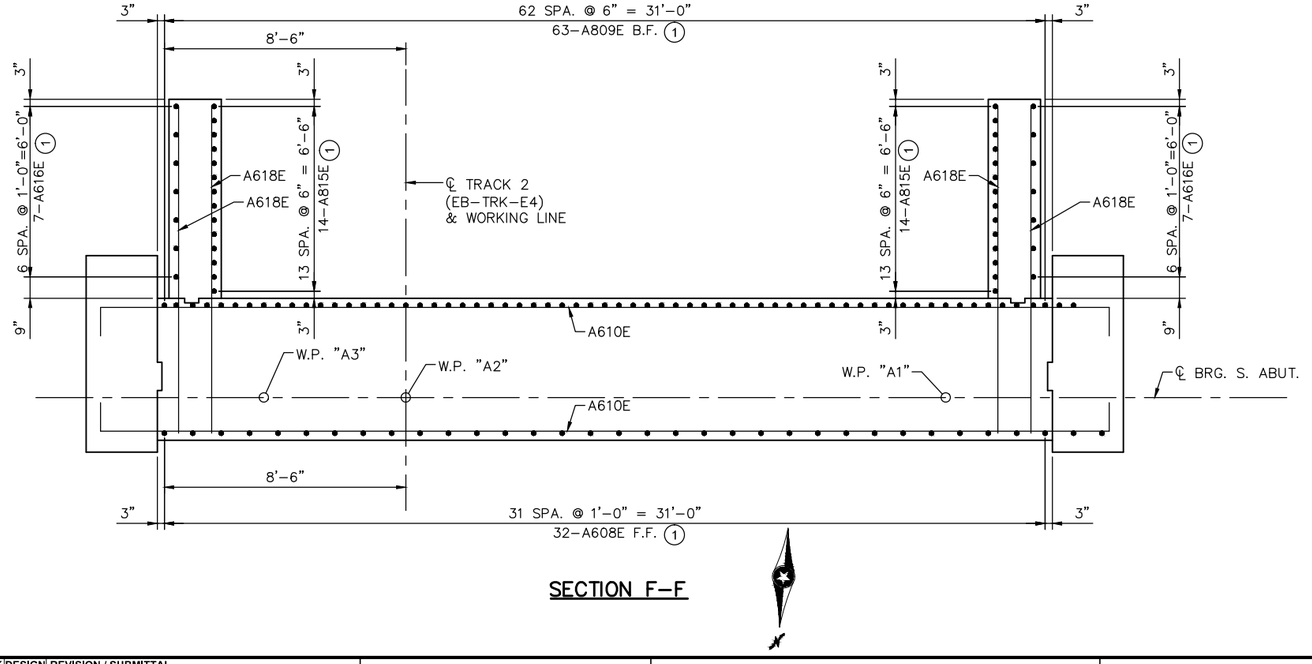

SECTION F-F

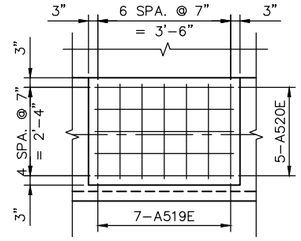

TYPICAL PEDESTAL PLAN

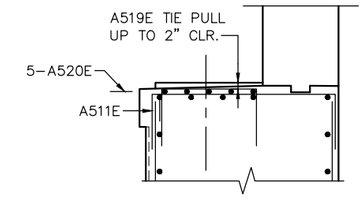

TYPICAL PEDESTAL SECTION

NOTES

F.F. – DENOTES FRONT FACE
B.F. – DENOTES BACK FACE
E.F. – DENOTES EACH FACE

SEE SHEET 19 FOR LOCATION OF SECTION E-E AND F-F.

(1) SPACED WITH FOOTING DOWELS.

(2) SEE SHEET 21 FOR WINGWALL REINFORCEMENT DETAILS.

NO.	DATE	BY	CHECK	DESIGN	REVISION / SUBMITTAL

DESIGNED BY: DJL CHECKED BY: KJK
DRAWN BY: MSK CHECKED BY: KJK

AECOM Kimley»Horn

90% SUBMISSION - 01/22/16

METROPOLITAN COUNCIL

SOUTHWEST Green Line LRT Extension

CIVIL - VOLUME 4G
5TH AVENUE AND 7TH STREET
BRIDGE 27C18
SOUTH ABUTMENT REINFORCEMENT 3

DISCIPLINE: STRUCTURES
SHEET NAME: CBR27C18-BRG-ABT-005-3

SHEET 20 OF 148

Jan, 18 2016 02:32 pm V:\3400_ADC\CAD\SEGMENT E4\PLAN SHEETS\STRUCTURES\27C18\CBR27C18-BRG-ABT-005.dwg By: Victor.Madrid

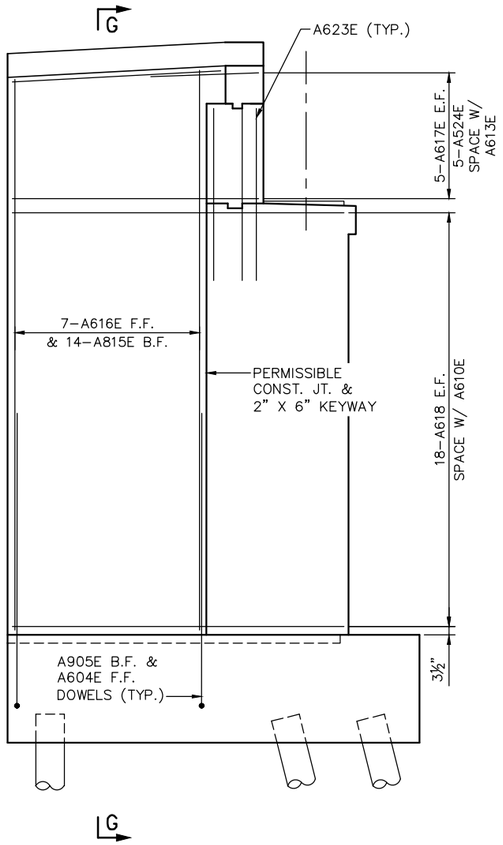

WINGWALL ELEVATION

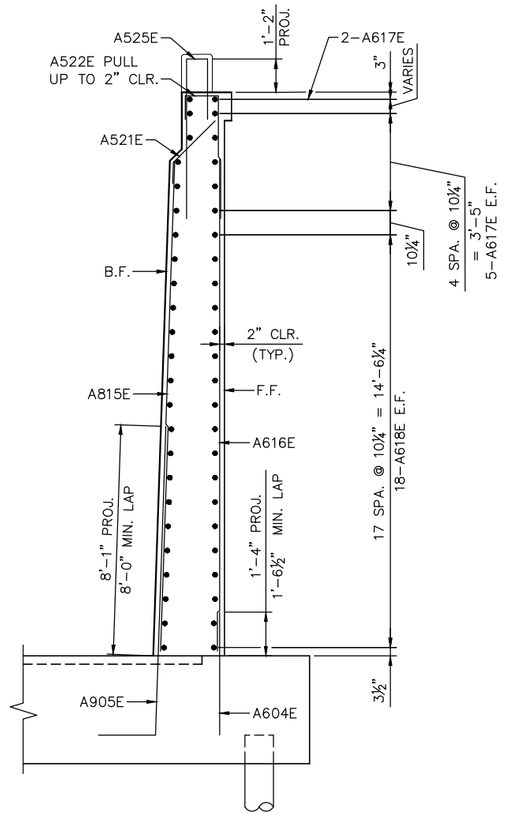

SECTION G–G

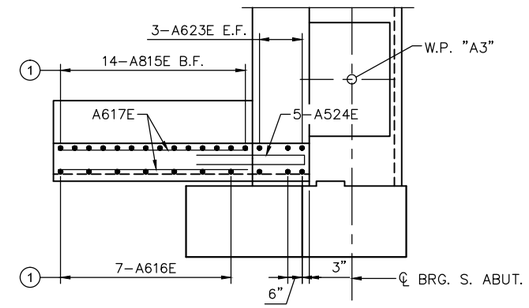

WINGWALL PLAN

NOTES

(1) SPACED WITH FOOTING DOWELS.

NO.	DATE	BY	CHECK	DESIGN	REVISION / SUBMITTAL

DESIGNED BY: DJL CHECKED BY: KJK
DRAWN BY: MSK CHECKED BY: KJK

AECOM Kimley»Horn

90% SUBMISSION - 01/22/16

METROPOLITAN COUNCIL

SOUTHWEST Green Line LRT Extension

CIVIL - VOLUME 4G
5TH AVENUE AND 7TH STREET
BRIDGE 27C18
SOUTH ABUTMENT REINFORCEMENT 4

DISCIPLINE: STRUCTURES
SHEET NAME: CBR27C18-BRG-ABT-005-4

SHEET 21 OF 148

Jan, 18 2016 02:32 pm v:\3400_ADC\CAD\SEGMENT E4\PLAN SHEETS\STRUCTURES\27C18\CBR27C18-BRG-ABT-005.dwg By: Victor.Madrid

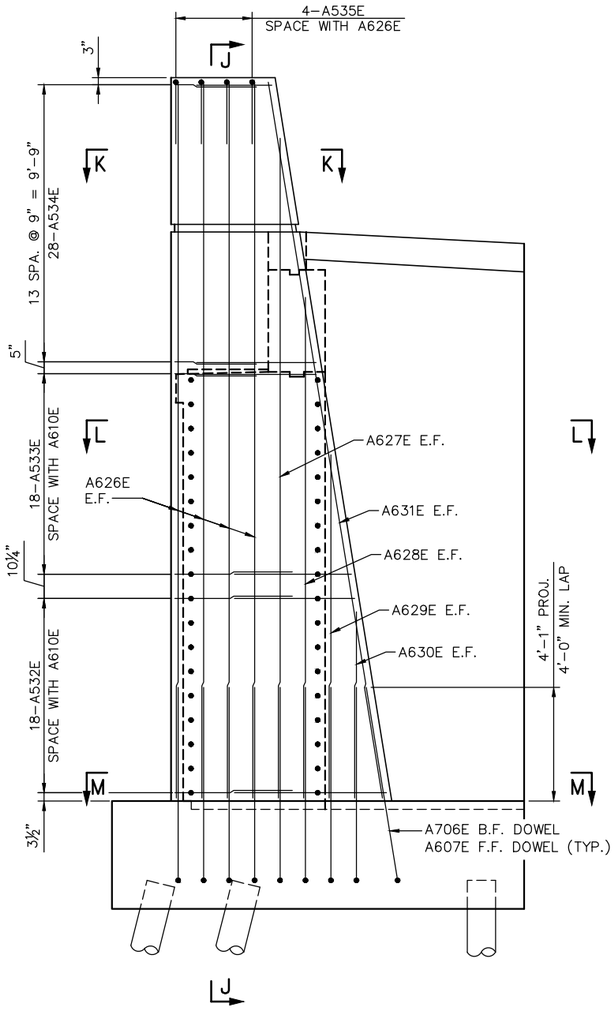

PILASTER ELEVATION

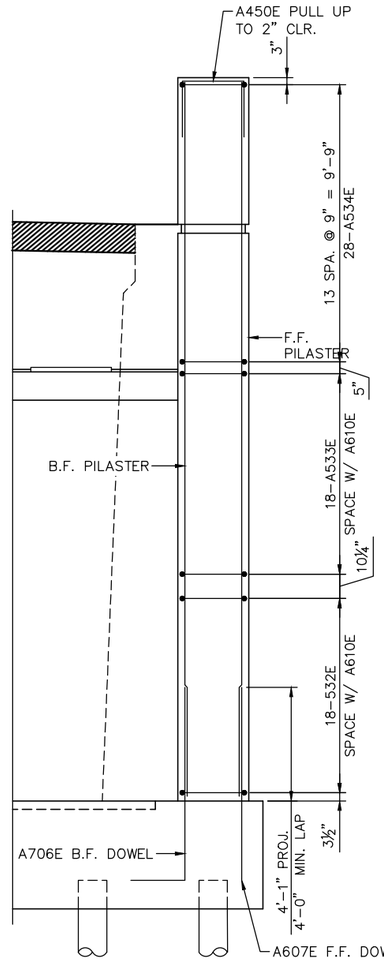

SECTION J–J

NOTES

F.F. – DENOTES FRONT FACE
B.F. – DENOTES BACK FACE
E.F. – DENOTES EACH FACE
(1) SPACE WITH DOWEL BARS.

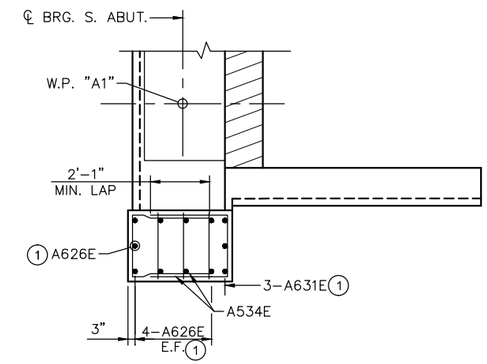

SECTION K–K

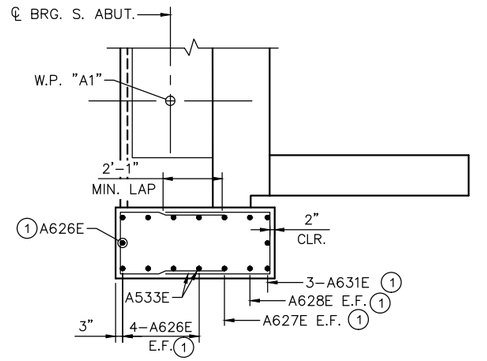

SECTION L–L

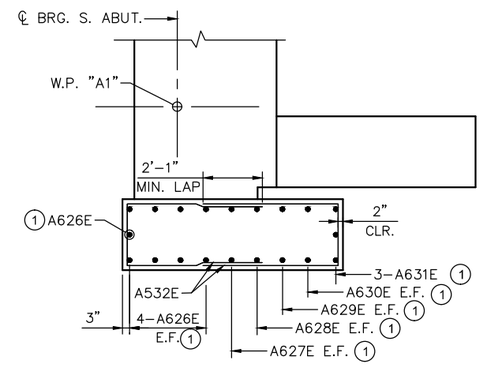

SECTION M–M

NO.	DATE	BY	CHECK	DESIGN	REVISION / SUBMITTAL

DESIGNED BY: DJL CHECKED BY: KJK
DRAWN BY: MSK CHECKED BY: KJK

AECOM Kimley»Horn

90% SUBMISSION - 01/22/16

METROPOLITAN COUNCIL

SOUTHWEST Green Line LRT Extension

CIVIL - VOLUME 4G
5TH AVENUE AND 7TH STREET
BRIDGE 27C18
SOUTH ABUTMENT REINFORCMENT 5

DISCIPLINE: STRUCTURES
SHEET NAME: CBR27C18-BRG-ABT-005-5

SHEET 22 OF 148

Jan, 18 2016 02:33 pm v:\3400_ADC\CAD\SEGMENT E4\PLAN SHEETS\STRUCTURES\27C18\CBR27C18-BRG-ABT-005.dwg By: Victor.Madrid

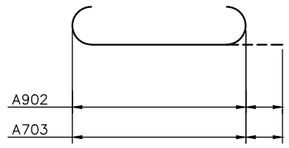

A902 & A703

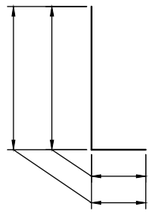

A905E & A706E

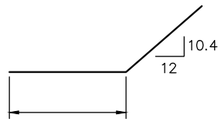

A521E

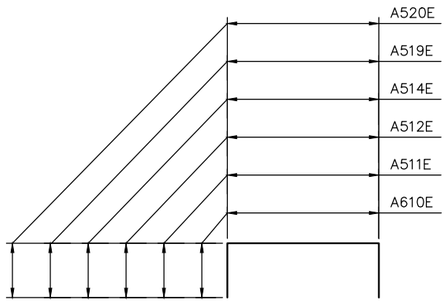

A610E, A511E, A512E, A514E, A519E, & A520E

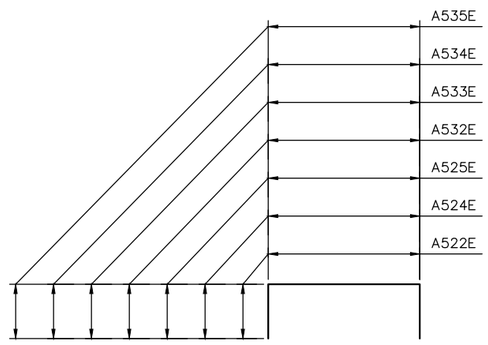

A522E, A524E, A525E, A532E, A533E, A534E, & A535E

BILL OF REINFORCEMENT FOR SOUTH ABUTMENT

BAR	NO.	LENGTH	SHAPE	LOCATION
A601	30		STR.	FOOTING, LONG. TOP & BOT.
A902	50		BENT	FOOTING, TRANS. BOT.
A703	74		BENT	FOOTING, TRANS. TOP
A604E	46		STR.	FOOTING, F.F.DOWEL
A905E	91		BENT	FOOTING, B.F.DOWEL
A706E	18		BENT	PILASTER, B.F.DOWEL
A607E	22		STR.	PILASTER, F.F.DOWEL
A608E	32		STR.	STEM, F.F. VERT.
A809E	63		STR.	STEM, B.B. VERT.
A610E	39		BENT	STEM, LONG.
A511E	32		BENT	STEM, TOP TIE
A512E	32		BENT	BACKWALL, TIE
A513E	10		STR.	BACKWALL, HORIZ. E.F.
A514E	32		BENT	BACKWALL, TIE
A815E	28		STR.	WINGWALL, B.F. VERT.
A616E	14		STR.	WINGWALL, F.F. VERT.
A617E	20		STR.	WINGWALL, HORIZ. E.F.
A618E	72		STR.	WINGWALL, HORIZ. E.F.
A519E	28		BENT	PEDESTAL, TIE
A520E	20		BENT	PEDESTAL, TIE
A521E	28		BENT	WINGWALL, B.F. VERT.
A522E	14		BENT	WINGWALL, VERT. TIE
A623E	12		STR.	WINGWALL, VERT.
A524E	10		BENT	WINGWALL, HORIZ. TIE
A525E	14		BENT	CURB, VERT. TIE
A626E	9		STR.	PILASTER, VERT.
A627E	2		STR.	PILASTER, VERT.
A628E	2		STR.	PILASTER, VERT.
A629E	2		STR.	PILASTER, VERT.
A630E	2		STR.	PILASTER, VERT.
A531E	3		STR.	PILASTER, VERT.
A532E	18		BENT	PILASTER, HORIZ. TIE
A533E	18		BENT	PILASTER, HORIZ. TIE
A534E	28		BENT	PILASTER, HORIZ. TIE
A535E	4		BENT	PILASTER, VERT. TIE

NO.	DATE	BY	CHECK	DESIGN	REVISION / SUBMITTAL

DESIGNED BY: DJL CHECKED BY: KJK
DRAWN BY: MSK CHECKED BY: KJK

AECOM Kimley»Horn

90% SUBMISSION - 01/22/16

METROPOLITAN COUNCIL

SOUTHWEST Green Line LRT Extension

CIVIL - VOLUME 4G
5TH AVENUE AND 7TH STREET
BRIDGE 27C18
SOUTH ABUTMENT REINFORCEMENT 6

DISCIPLINE: STRUCTURES
SHEET NAME: CBR27C18-BRG-ABT-005-6

SHEET 23 OF 148

Jan, 18 2016 02:33 pm V:\3400_ADC\CAD\SEGMENT E4\PLAN SHEETS\STRUCTURES\27C18\CBR27C18-BRG-ABT-005.dwg By: Victor.Madrid

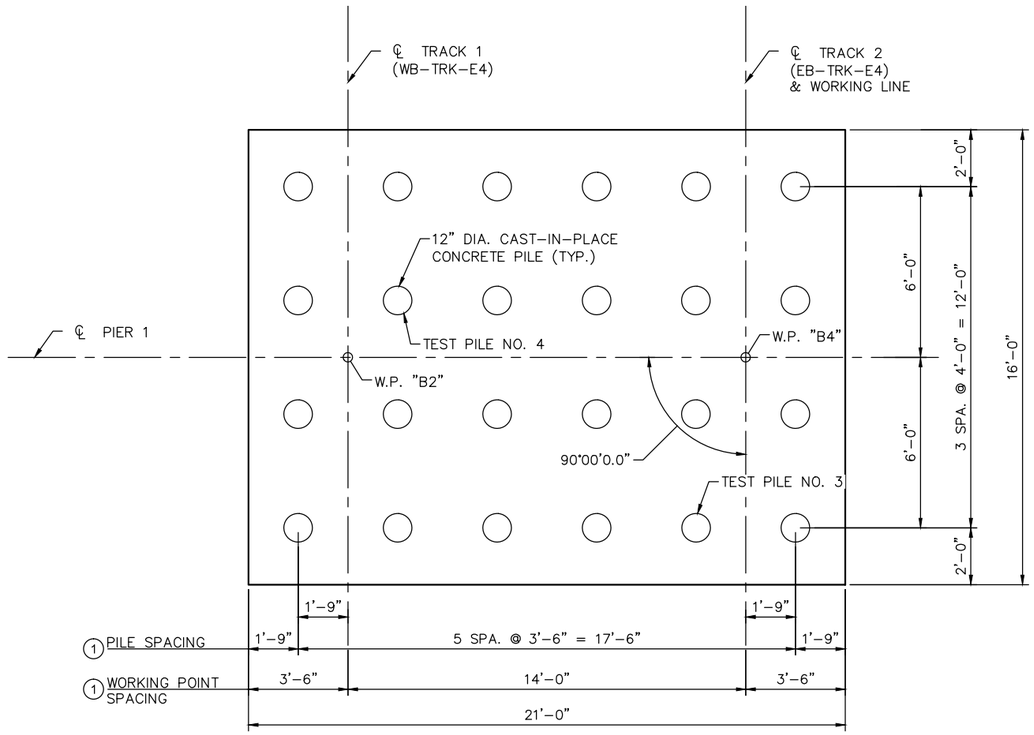

FOOTING PLAN

PIER 1 COMPUTED PILE LOAD - TONS/PILE	
FACTORED DEAD LOAD	51
FACTORED LIVE LOAD	19
FACTORED OVERTURNING	17
* FACTORED DESIGN LOAD	87
* BASED ON STRENGTH V LOAD COMBINATION.	

PIER 1 REQUIRED NOMINAL PILE BEARING RESISTANCE FOR CIP PILES Rn - TONS/PILE		
FIELD CONTROL METHOD	φdyn	* Rn
PDA	0.65	134
* Rn = (FACTORED DESIGN LOAD) / φdyn		

GENERAL PILE NOTES

2 CAST–IN–PLACE CONCRETE TEST PILES 100 FT. LONG
22 CAST–IN–PLACE CONCRETE PILES EST. 90 FT. LENGTH
24 CAST–IN–PLACE CONCRETE PILES REQ'D FOR WEST ABUT.

PILE SPACING SHOWN IS AT BOTTOM OF FOOTING.

PILES TO HAVE A NOMINAL DIAMETER OF 12" AND 5/16" WALL THICKNESS.

FOR PILE SPLICE DETAILS SEE DETAIL B201.

NOTES:

(1) DIMENSIONS MEASURED ALONG ℄ PIER

NO.	DATE	BY	CHECK	DESIGN	REVISION / SUBMITTAL

DESIGNED BY: DJL CHECKED BY: KJK
DRAWN BY: MSK CHECKED BY: KJK

AECOM Kimley»Horn

90% SUBMISSION - 01/22/16

METROPOLITAN COUNCIL

SOUTHWEST Green Line LRT Extension

CIVIL - VOLUME 4G
5TH AVENUE AND 7TH STREET
BRIDGE 27C18
PIER 1 DETAILS 1

DISCIPLINE: STRUCTURES
SHEET NAME: CBR27C18-BRG-PIR-001

SHEET 24 OF 148

Jan. 19 2016 08:58 am V:\3400_ADC\CAD\SEGMENT E4\PLAN SHEETS\STRUCTURES\27C18\CBR27C18-BRG-PIR-001.dwg By: Victor.Madrid

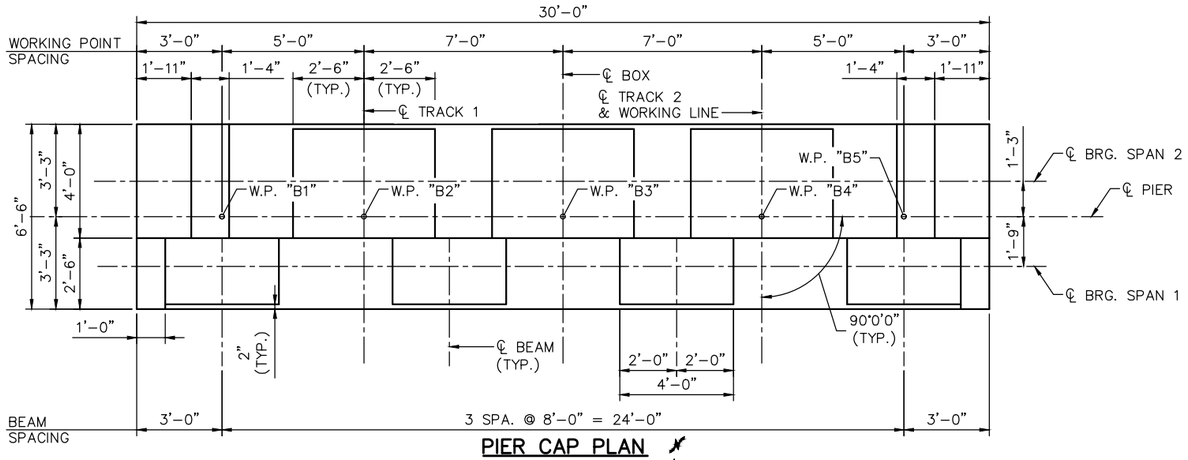

PIER CAP PLAN

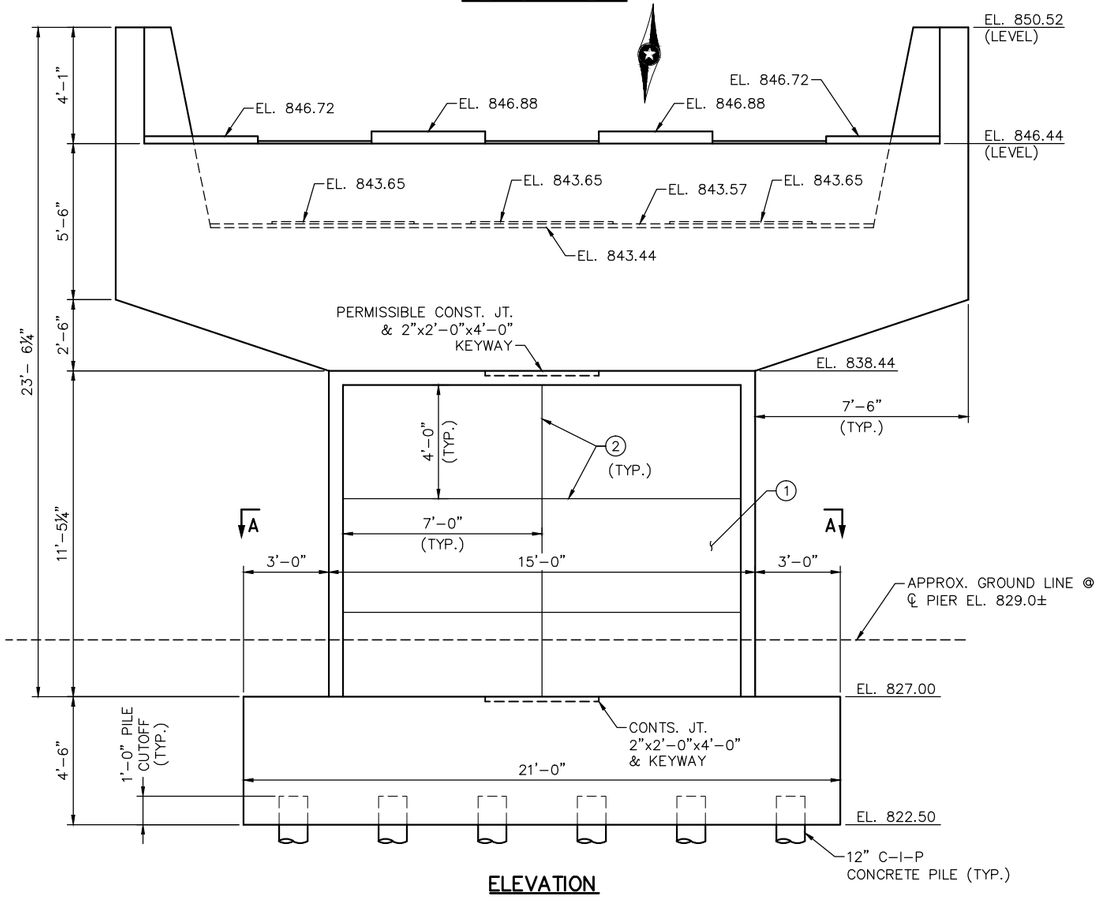

ELEVATION

LOOKING UP STATION

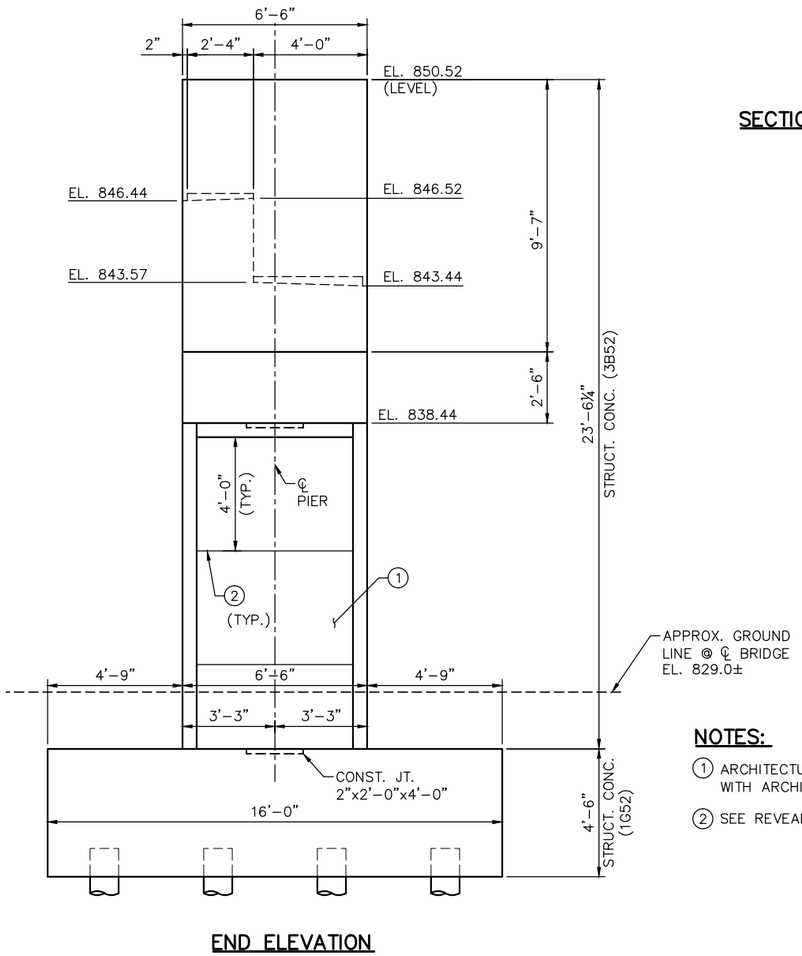

END ELEVATION

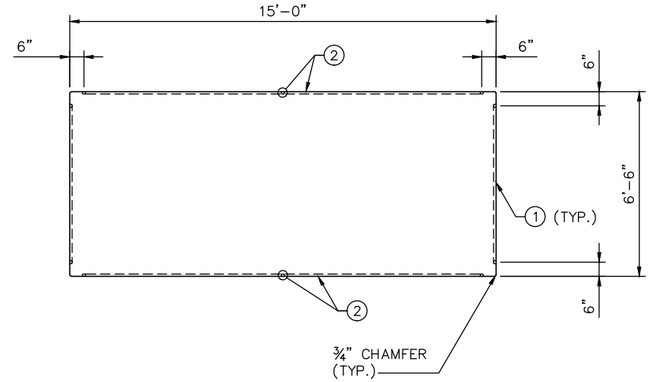

SECTION A–A

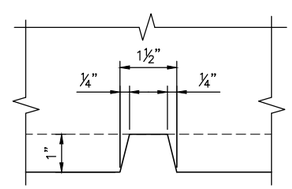

REVEAL DETAIL

NOTES:

1. ARCHITECTURAL CONCRETE TEXTURE (RECTANGULAR GRID) WITH ARCHITECTURAL FINISH (SINGLE COLOR).
2. SEE REVEAL DETAILS THIS SHEET.

NO.	DATE	BY	CHECK	DESIGN	REVISION / SUBMITTAL

DESIGNED BY: DJL | CHECKED BY: KJK
DRAWN BY: MSK | CHECKED BY: KJK

AECOM Kimley»Horn

90% SUBMISSION - 01/22/16

METROPOLITAN COUNCIL

SOUTHWEST Green Line LRT Extension

CIVIL - VOLUME 4G
5TH AVENUE AND 7TH STREET
BRIDGE 27C18
PIER 1 DETAILS 2

DISCIPLINE: STRUCTURES

SHEET NAME: CBR27C18-BRG-PIR-002

SHEET 25 OF 148

Jan, 18 2016 02:34 pm V:\3400_ADC\CAD\SEGMENT E4\PLAN SHEETS\STRUCTURES\27C18\CBR27C18-BRG-PIR-002.dwg By: Victor.Madrid

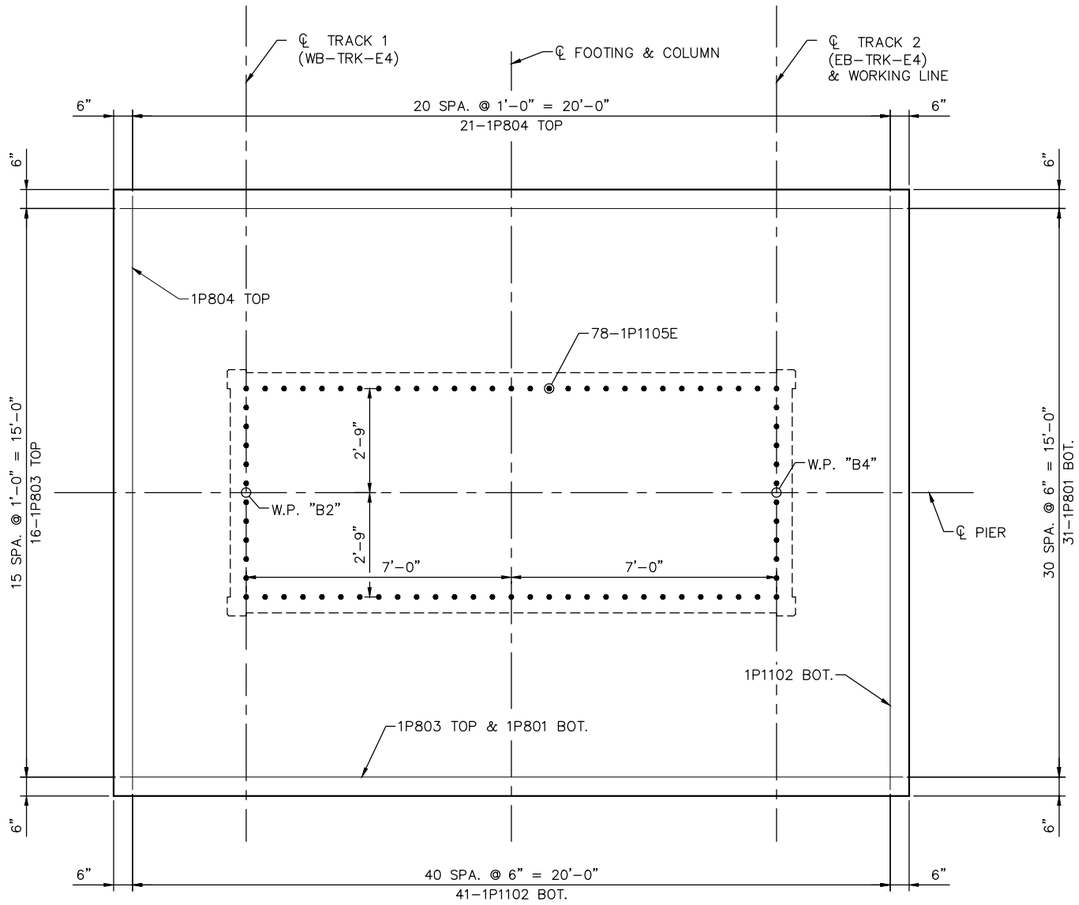

FOOTING PLAN

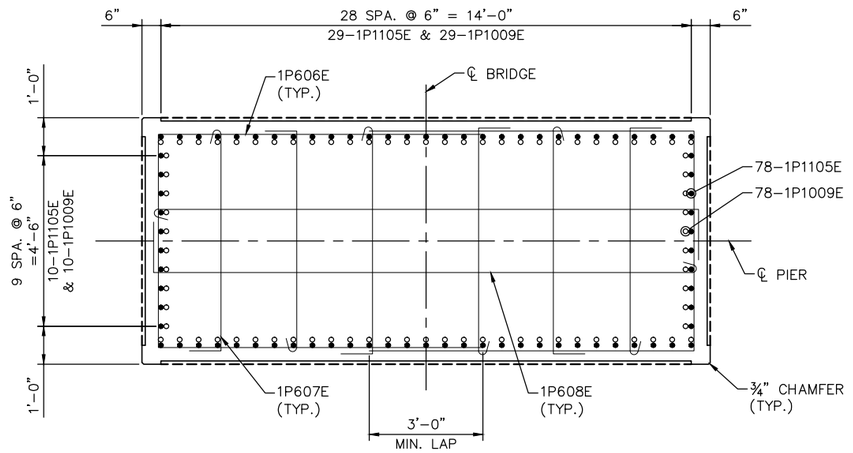

COLUMN SECTION

NO.	DATE	BY	CHECK	DESIGN	REVISION / SUBMITTAL

DESIGNED BY: DJL | CHECKED BY: KJK
DRAWN BY: MSK | CHECKED BY: KJK

AECOM Kimley»Horn

90% SUBMISSION - 01/22/16

METROPOLITAN COUNCIL

SOUTHWEST Green Line LRT Extension

CIVIL - VOLUME 4G
5TH AVENUE AND 7TH STREET
BRIDGE 27C18
PIER 1 REINFORCMENT 1

DISCIPLINE: STRUCTURES

SHEET NAME: CBR27C18-BRG-PIR-003-1

SHEET 26 OF 148

Jan, 18 2016 02:34 pm v:\3400_ADC\CAD\SEGMENT E4\PLAN SHEETS\STRUCTURES\27C18\CBR27C18-BRG-PIR-003-1.dwg By: Victor.Madrid

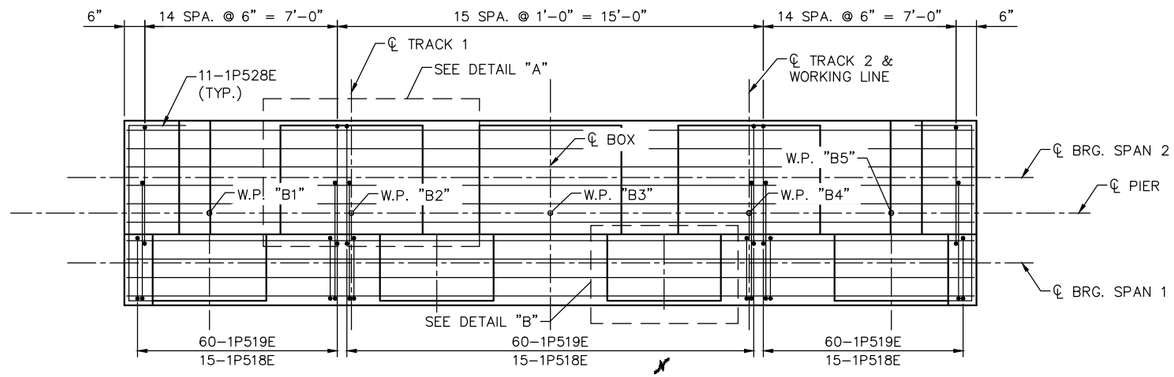

PIER CAP PLAN

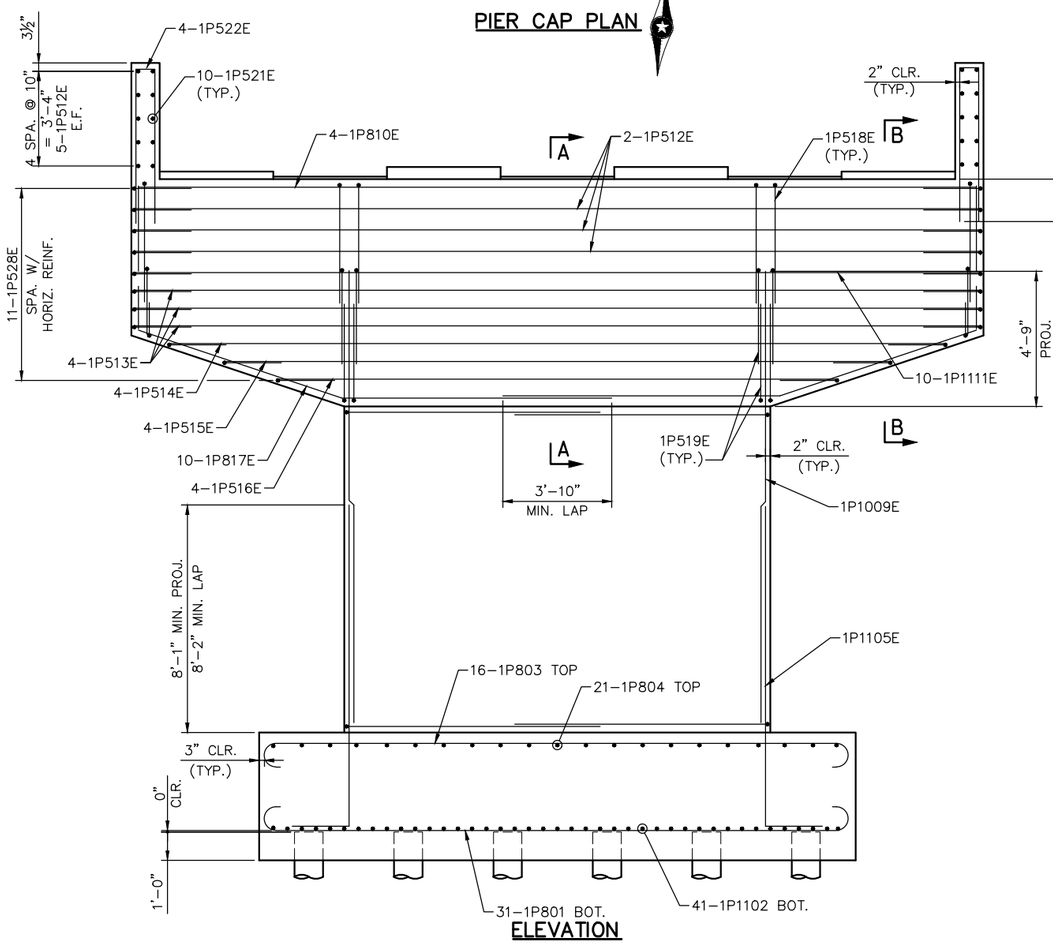

ELEVATION

(LOOKING FROM SPAN 1 – UP STATION)

NOTES:

SEE SHEET 28 FOR SECTION "A–A" AND SECTION "B–B".

SEE SHEET 29 FOR DETAIL "A" AND DETAIL "B".

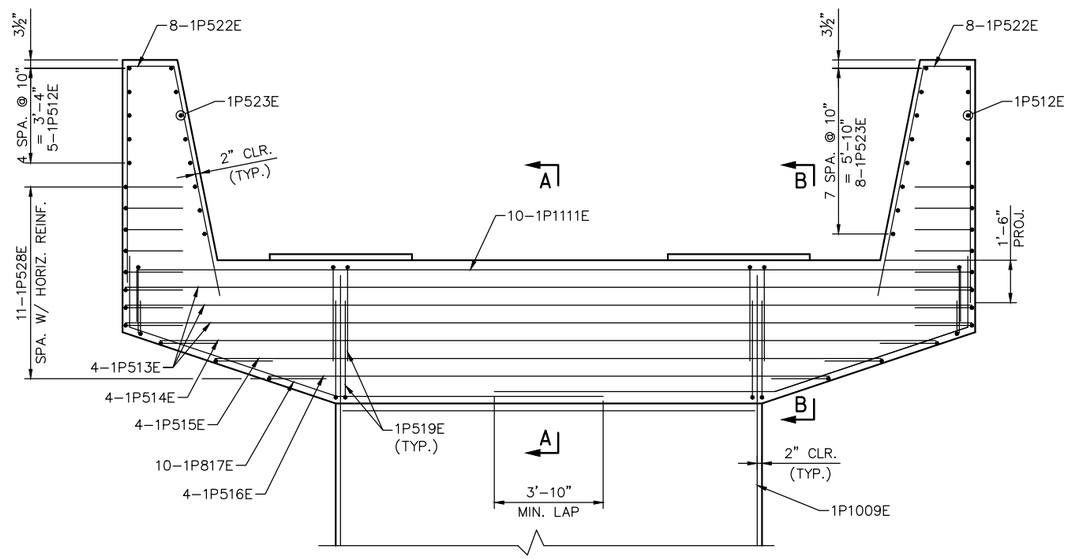

ELEVATION

(LOOKING FROM SPAN 2 – BACK STATION)

NO.	DATE	BY	CHECK	DESIGN	REVISION / SUBMITTAL

DESIGNED BY: DJL | CHECKED BY: KJK

DRAWN BY: MSK | CHECKED BY: KJK

AECOM Kimley»Horn

90% SUBMISSION - 01/22/16

METROPOLITAN COUNCIL

SOUTHWEST Green Line LRT Extension

CIVIL - VOLUME 4G
5TH AVENUE AND 7TH STREET
BRIDGE 27C18
PIER 1 REINFORCMENT 2

DISCIPLINE: STRUCTURES

SHEET NAME: CBR27C18-BRG-PIR-003-2

SHEET 27 OF 148

Jan, 18 2016 02:35 pm V:\3400_ADC\CAD\SEGMENT E4\PLAN SHEETS\STRUCTURES\27C18\CBR27C18-BRG-PIR-003-1.dwg By: Victor.Madrid

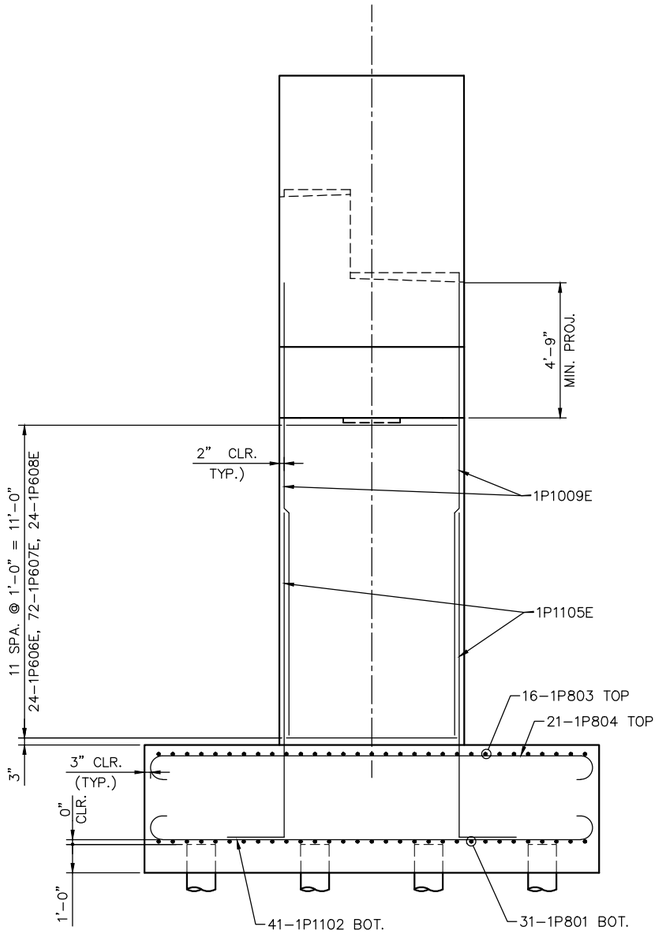

END ELEVATION

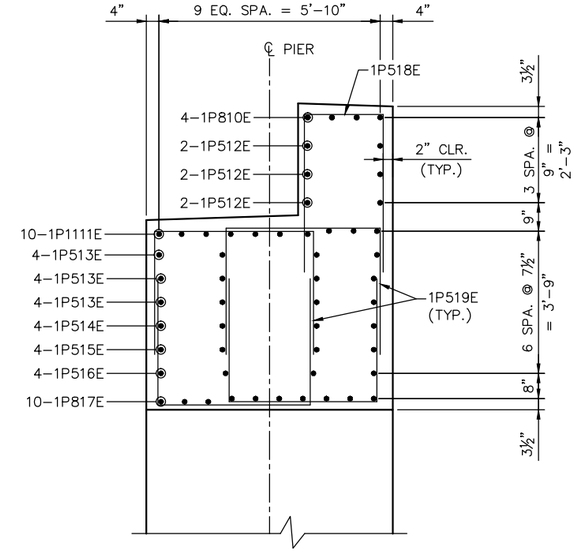

SECTION A-A

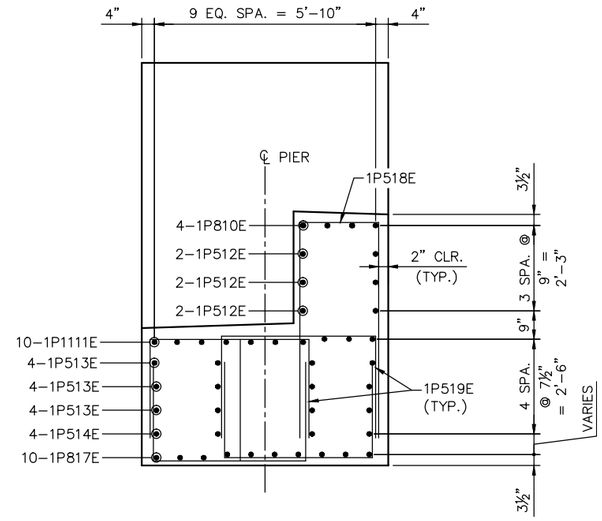

SECTION B-B

Jan. 18 2016 02:35 pm V:\3400_ADC\CAD\SEGMENT E4\PLAN SHEETS\STRUCTURES\27C18\CBR27C18-BRG-PIR-003-1.dwg By: Victor.Madrid

NO.	DATE	BY	CHECK	DESIGN	REVISION / SUBMITTAL

DESIGNED BY: DJL | CHECKED BY: KJK
DRAWN BY: MSK | CHECKED BY: KJK

AECOM Kimley»Horn

90% SUBMISSION - 01/22/16

METROPOLITAN COUNCIL

SOUTHWEST Green Line LRT Extension

CIVIL - VOLUME 4G
5TH AVENUE AND 7TH STREET
BRIDGE 27C18
PIER 1 REINFORCMENT 3

DISCIPLINE: STRUCTURES

SHEET NAME: CBR27C18-BRG-PIR-003-3

SHEET 28 OF 148

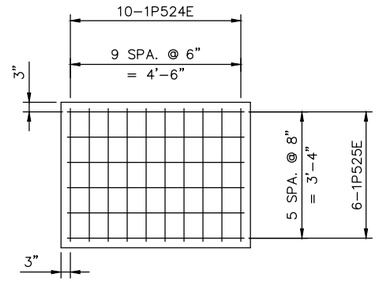

DETAIL A

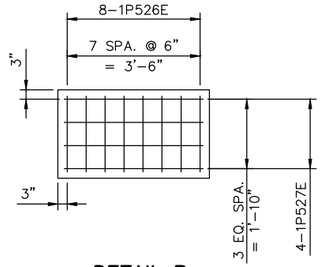

DETAIL B

BILL OF REINFORCEMENT FOR PIER 1

BAR	NO.	LENGTH	SHAPE	LOCATION
1P801	31	'-"	BENT	FOOTING, TRANS. BOT.
1P1102	41	'-"	BENT	FOOTING, LONG. BOT.
1P803	16	'-"	BENT	FOOTING, TRANS. TOP
1P804	21	'-"	BENT	FOOTING, TRANS. BOT.
1P1105E	78	'-"	BENT	COLUMN DOWELS
1P606E	24	'-"	BENT	COLUMN TIE
1P607E	72	'-"	BENT	COLUMN TIE
1P608E	24	'-"	BENT	COLUMN TIE
1P1009E	78	'-"	STR.	COLUMN VERT.
1P810E	4	'-"	BENT	CAP, LONG. TOP.
1P1111E	10	'-"	BENT	CAP, LONG. TOP
1P512E	6	'-"	STR.	CAP, LONG.
1P513E	12	'-"	STR.	CAP, LONG.
1P514E	4	'-"	STR.	CAP, LONG.
1P515E	4	'-"	STR.	CAP, LONG.
1P516E	4	'-"	STR.	CAP, LONG.
1P817E	10	'-"	BENT	CAP, LONG. BOT.
1P518E	45	'-"	BENT	CAP, TOP TIE
1P519E	180	'-"	BENT	CAP STIRRUP
1P520E	8	'-"	BENT	SIDE WALL TIE
1P521E	20	'-"	STR.	SIDE WALL HORIZ.
1P522E	16	'-"	BENT	SHEAR LUG TIE
1P523E	16	'-"	STR.	SHEAR LUG HORIZ.
1P524E	20	'-"	BENT	PEDESTAL TIE
1P525E	12	'-"	BENT	PEDESTAL TIE
1P526E	32	'-"	BENT	PEDESTAL TIE
1P527E	24	'-"	BENT	PEDESTAL TIE
1P528E	33	'-"	BENT	CAP, END TIE

NO.	DATE	BY	CHECK	DESIGN	REVISION / SUBMITTAL

DESIGNED BY: DJL | CHECKED BY: KJK
DRAWN BY: MSK | CHECKED BY: KJK

AECOM Kimley»Horn

90% SUBMISSION - 01/22/16

METROPOLITAN COUNCIL

SOUTHWEST Green Line LRT Extension

CIVIL - VOLUME 4G
5TH AVENUE AND 7TH STREET
BRIDGE 27C18
PIER 1 REINFORCMENT 4

DISCIPLINE: STRUCTURES
SHEET NAME: CBR27C18-BRG-PIR-003-4

SHEET 29 OF 148

Jan, 18 2016 02:35 pm v:\3400_ADC\CAD\SEGMENT E4\PLAN SHEETS\STRUCTURES\27C18\CBR27C18-BRG-PIR-003-1.dwg By: Victor.Madrid

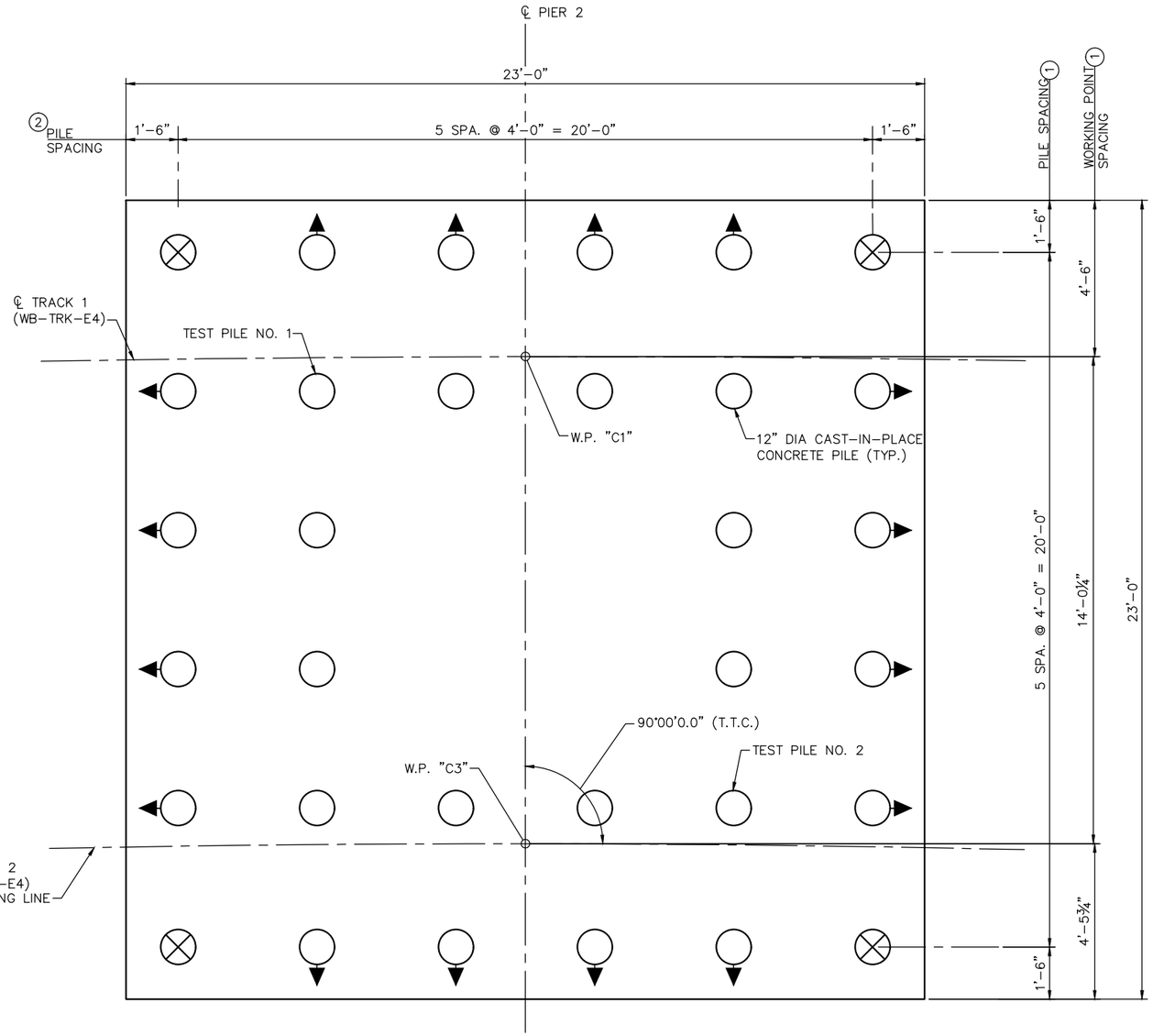

FOOTING PLAN

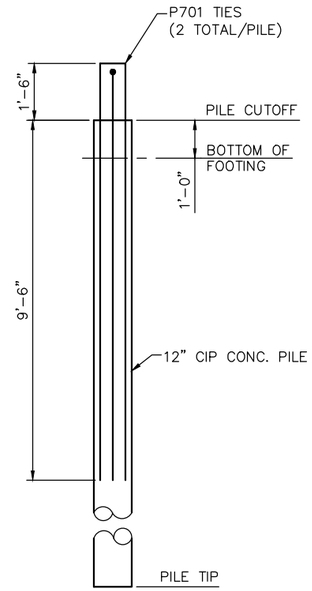

PILE ANCHORAGE DETAIL

PIER 2 COMPUTED PILE LOAD - TONS/PILE	
FACTORED DEAD LOAD	
FACTORED LIVE LOAD	
FACTORED OVERTURNING	
FACTORED DESIGN UPLIFT	
* FACTORED DESIGN LOAD	86
* BASED ON STRENGTH V LOAD COMBINATION.	

PIER 2 REQUIRED NOMINAL PILE BEARING RESISTANCE FOR CIP PILES Rn - TONS/PILE		
FIELD CONTROL METHOD	φdyn	Rn
PDA	0.65	132
* Rn = (FACTORED DESIGN LOAD) / φdyn		

GENERAL PILE NOTES

2 CAST-IN-PLACE CONCRETE TEST PILES 99 FT. LONG
30 CAST-IN-PLACE CONCRETE PILES EST. 89 FT. LENGTH
32 CAST-IN-PLACE CONCRETE PILES REQ'D FOR PIER 2
PILE SPACING SHOWN IS AT PILE CUTOFF.

PILES MARKED THUS ◯ TO BE BATTERED 3" PER FOOT IN DIRECTION SHOWN.

PILES TO HAVE A NOMINAL DIAMETER OF 12" AND 5/16" WALL THICKNESS.

FOR PILE SPLICE DETAILS SEE DETAIL B201.

NOTES:

(1) DIMENSIONS MEASURED ALONG ℄ PIER.

(2) DIMENSIONS MEASURED NORMAL TO ℄ PIER.

⊗ INDICATES TENSION PILE. SEE PILE ANCHORAGE DETAILS.

NO.	DATE	BY	CHECK	DESIGN	REVISION / SUBMITTAL

DESIGNED BY: KJK CHECKED BY: DJL
DRAWN BY: MSK CHECKED BY: DJL

AECOM Kimley»Horn

90% SUBMISSION - 01/22/16

METROPOLITAN COUNCIL

SOUTHWEST Green Line LRT Extension

CIVIL - VOLUME 4G
5TH AVENUE AND 7TH STREET
BRIDGE 27C18
PIER 2 DETAILS 1

DISCIPLINE: STRUCTURES
SHEET NAME: CBR27C18-BRG-PIR-004

SHEET 30 OF 148

Jan. 19 2016 02:10 pm v:\3400_ADC\CAD\SEGMENT E4\PLAN SHEETS\STRUCTURES\27C18\CBR27C18-BRG-PIR-004.dwg By: mark.krzyzewski

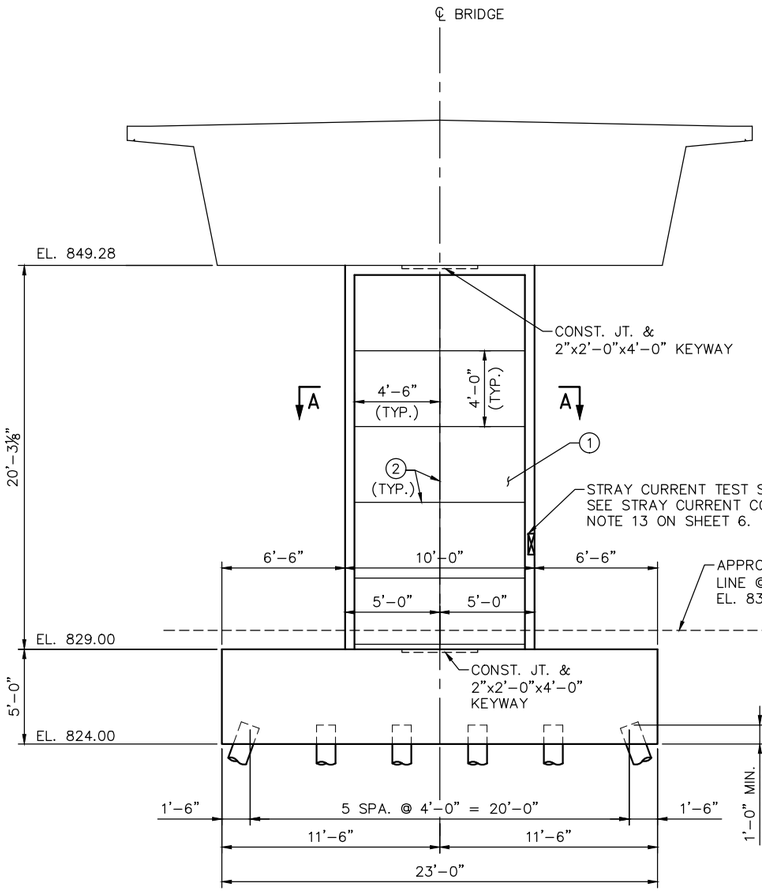

ELEVATION

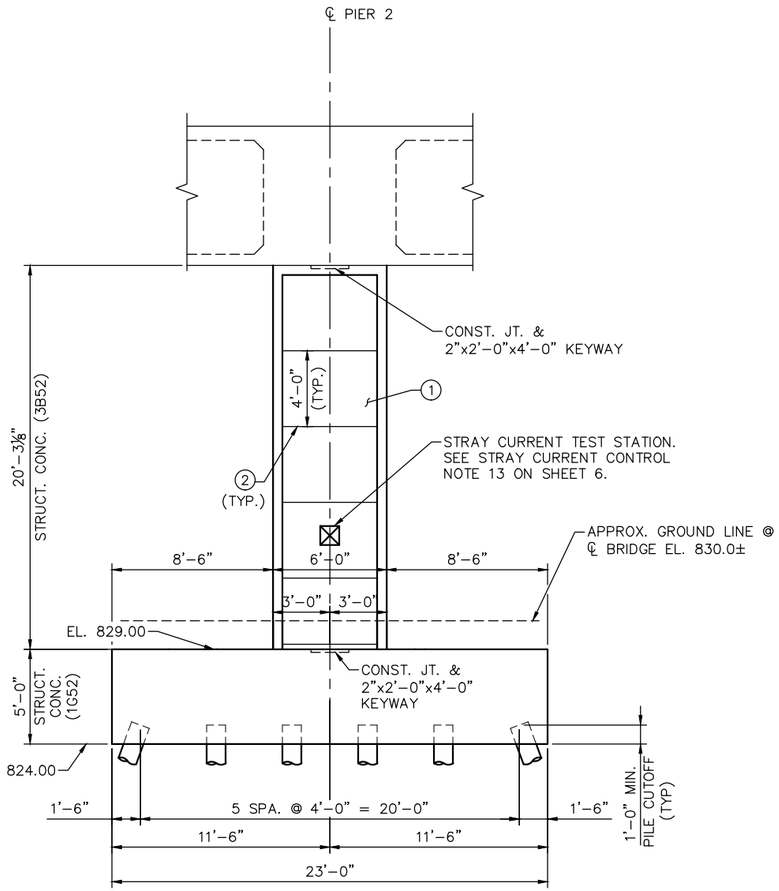

END ELEVATION

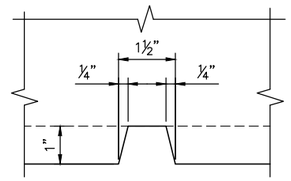

REVEAL DETAIL

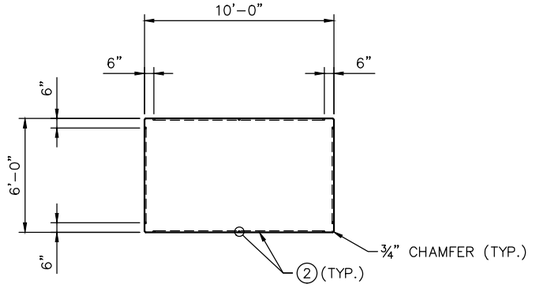

SECTION A–A

NOTES:

1. ARCHITECTURAL CONCRETE TEXTURE (RECTANGULAR GRID) WITH ARCHITECTURAL SURFACE FINISH (SINGLE COLOR).
2. SEE REVEAL DETAIL THIS SHEET.

NO.	DATE	BY	CHECK	DESIGN	REVISION / SUBMITTAL

DESIGNED BY: KJK | CHECKED BY: DJL
DRAWN BY: MSK | CHECKED BY: DJL

AECOM Kimley»Horn

90% SUBMISSION - 01/22/16

METROPOLITAN COUNCIL

SOUTHWEST Green Line LRT Extension

CIVIL - VOLUME 4G
5TH AVENUE AND 7TH STREET
BRIDGE 27C18
PIER 2 DETAILS 2

DISCIPLINE: STRUCTURES
SHEET NAME: CBR27C18-BRG-PIR-005-1

SHEET 31 OF 148

Jan, 19 2016 02:11 pm V:\3400_ADC\CAD\SEGMENT E4\PLAN SHEETS\STRUCTURES\27C18\CBR27C18-BRG-PIR-005-1.dwg By: mark.krzyzewski

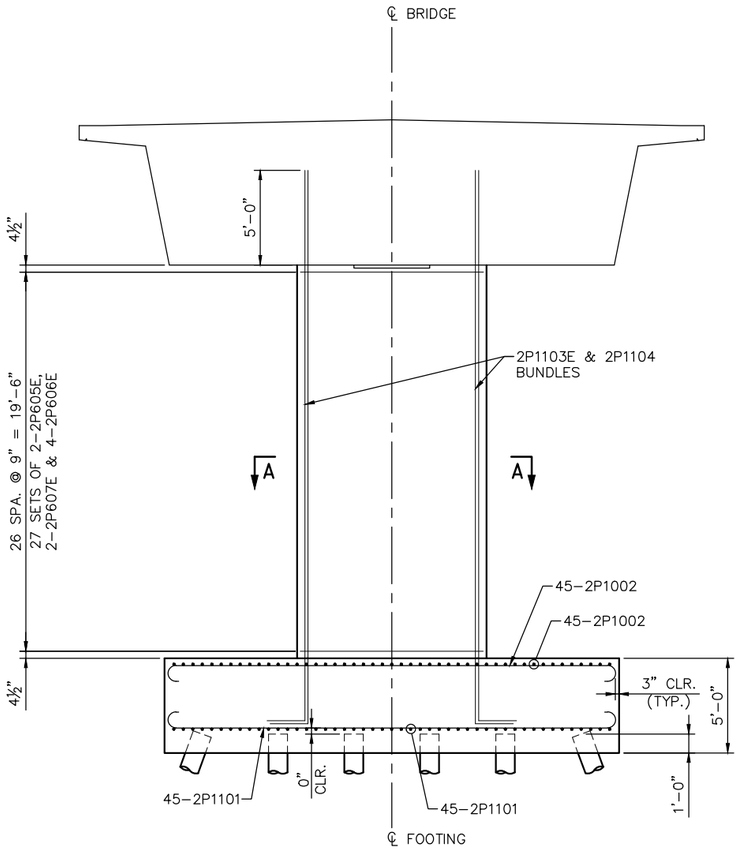

ELEVATION

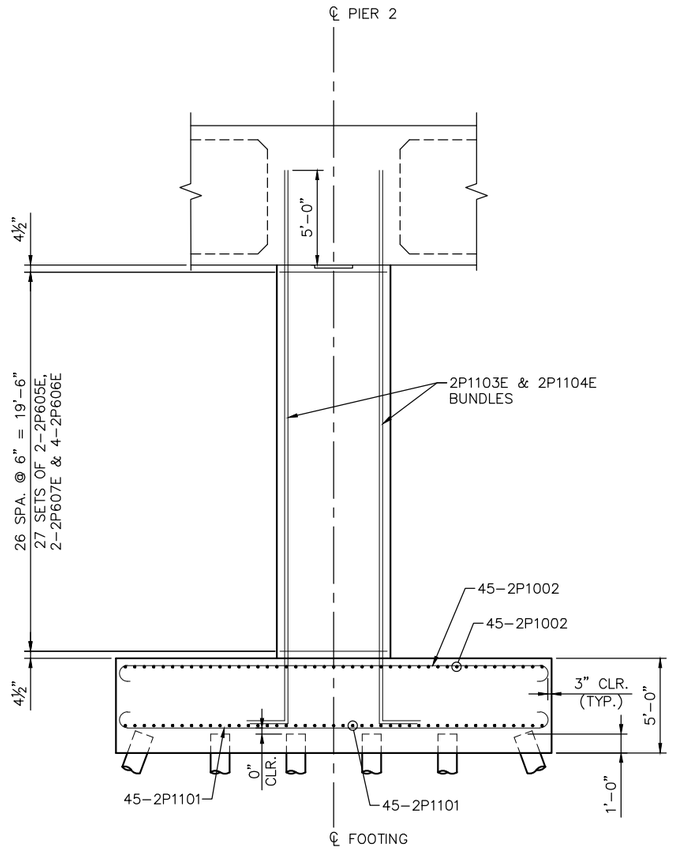

END ELEVATION

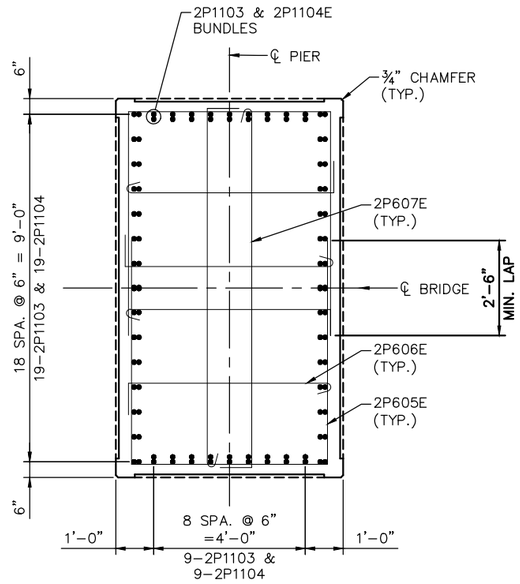

SECTION A-A

NO.	DATE	BY	CHECK	DESIGN	REVISION / SUBMITTAL

DESIGNED BY: KJK | CHECKED BY: DJL
DRAWN BY: MSK | CHECKED BY: DJL

AECOM Kimley»Horn

90% SUBMISSION - 01/22/16

METROPOLITAN COUNCIL

SOUTHWEST Green Line LRT Extension

CIVIL - VOLUME 4G
5TH AVENUE AND 7TH STREET
BRIDGE 27C18
PIER 2 REINFORCMENT 1

DISCIPLINE: STRUCTURES
SHEET NAME: CBR27C18-BRG-PIR-005-2

SHEET 32 OF 148

Jan, 19 2016 02:11 pm V:\3400_ADC\CAD\SEGMENT E4\PLAN SHEETS\STRUCTURES\27C18\CBR27C18-BRG-PIR-005-1.dwg By: mark.krzyzewski

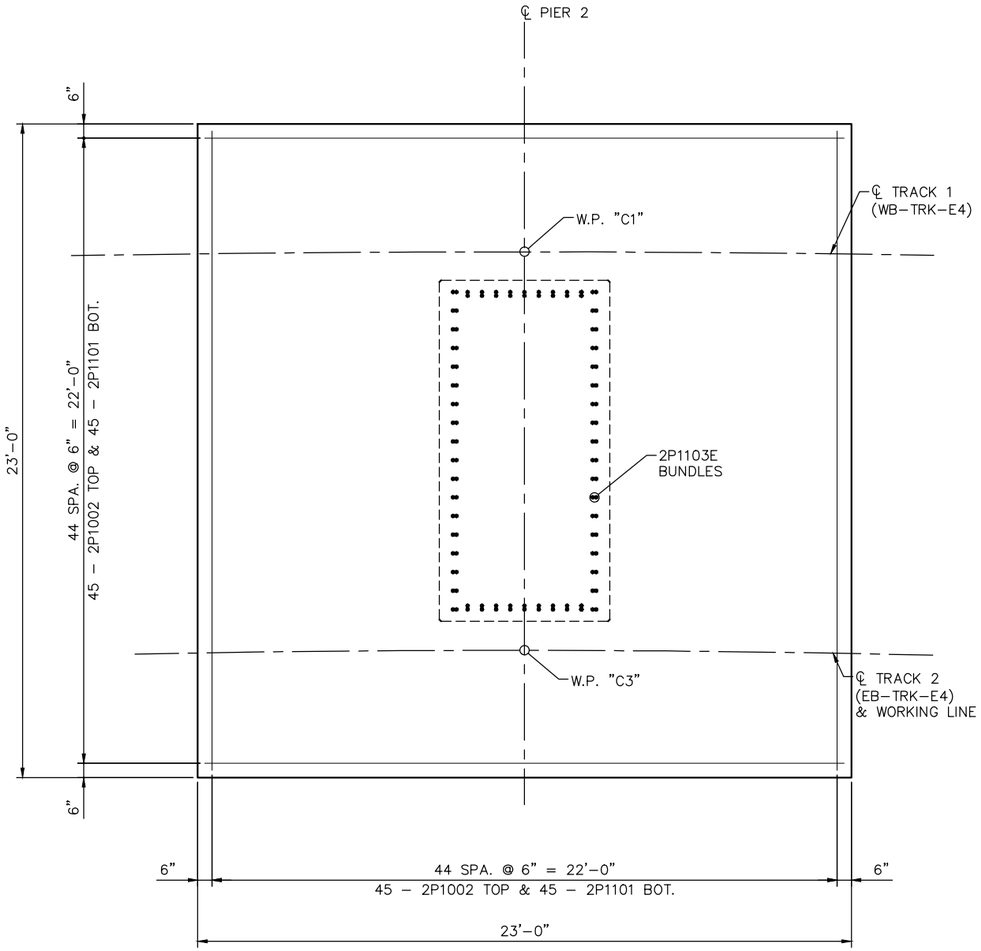

FOOTING PLAN

BILL OF REINFORCEMENT FOR PIER 2				
BAR	NO.	LENGTH	SHAPE	LOCATION
2P1101	90	'-"	BENT	FOOTING, BOT. TRANS. & LONG.
2P1002	90	'-"	BENT	FOOTING, BOT. TRANS. & LONG.
2P1103E	56	'-"	BENT	COLUMN DOWELS
2P1104E	56	'-"	BENT	COLUMN DOWELS
2P605E	54	'-"	BENT	COLUMN TIE, OUTSIDE
2P606E	108	'-"	BENT	COLUMN TIE, INTERIOR
2P607E	54	'-"	BENT	COLUMN TIE, INTERIOR

Jan, 19 2016 02:11 pm V:\3400_ADC\CAD\SEGMENT E4\PLAN SHEETS\STRUCTURES\27C18\CBR27C18-BRG-PIR-005-1.dwg By: mark.krzyzewski

NO.	DATE	BY	CHECK	DESIGN	REVISION / SUBMITTAL

DESIGNED BY: KJK CHECKED BY: DJL
DRAWN BY: MSK CHECKED BY: DJL

AECOM Kimley»Horn

90% SUBMISSION - 01/22/16

METROPOLITAN COUNCIL

SOUTHWEST Green Line LRT Extension

CIVIL - VOLUME 4G
5TH AVENUE AND 7TH STREET
BRIDGE 27C18
PIER 2 REINFORCMENT 2

DISCIPLINE: STRUCTURES

SHEET NAME: CBR27C18-BRG-PIR-005-3

SHEET 33 OF 148

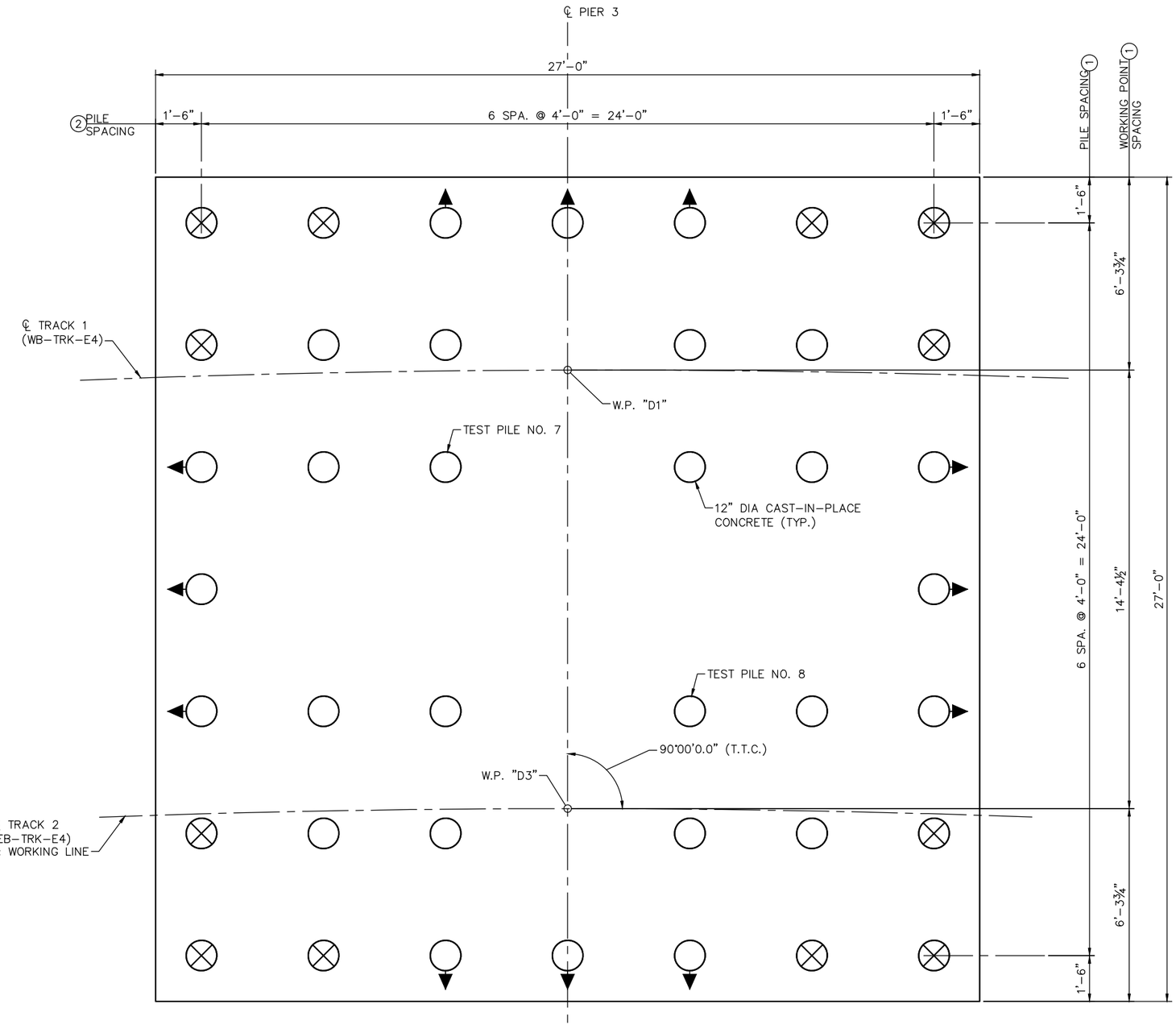

FOOTING PLAN

PIER 3 COMPUTED PILE LOAD - TONS/PILE	
FACTORED DEAD LOAD	
FACTORED LIVE LOAD	
FACTORED OVERTURNING	
FACTORED DESIGN UPLIFT	
* FACTORED DESIGN LOAD	82
* BASED ON STRENGTH V LOAD COMBINATION.	

PIER 3 REQUIRED NOMINAL PILE BEARING RESISTANCE FOR CIP PILES Rn - TONS/PILE		
FIELD CONTROL METHOD	φdyn	* Rn
PDA	0.65	126
* Rn = (FACTORED DESIGN LOAD) / φdyn		

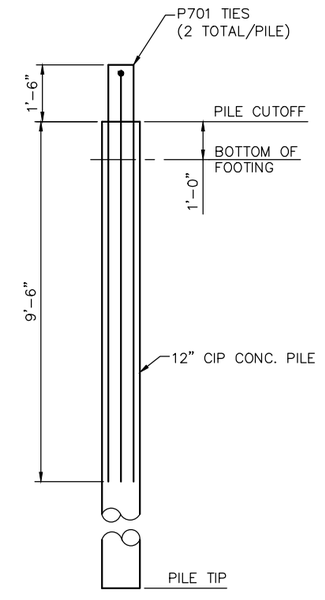

PILE ANCHORAGE DETAIL

GENERAL PILE NOTES

2 CAST-IN-PLACE CONCRETE TEST PILES 100 FT. LONG
38 CAST-IN-PLACE CONCRETE PILES EST. 90 FT. LENGTH
40 CAST-IN-PLACE CONCRETE PILES REQ'D FOR PIER 3.

PILE SPACING SHOWN IS AT PILE CUTOFF.

PILES MARKED THUS ○ TO BE BATTERED 3" PER FOOT IN DIRECTION SHOWN.

PILES TO HAVE A NOMINAL DIAMETER OF 12" AND 5/16" WALL THICKNESS.

FOR PILE SPLICE DETAILS SEE DETAIL B201.

NOTES:

(1) DIMENSIONS MEASURED ALONG ℄ PIER.

(2) DIMENSIONS MEASURED NORMAL TO ℄ PIER.

⊗ INDICATES TENSION PILE. SEE PILE ANCHORAGE DETAILS.

NO.	DATE	BY	CHECK	DESIGN	REVISION / SUBMITTAL

DESIGNED BY: KJK | CHECKED BY: DJL
DRAWN BY: MSK | CHECKED BY: DJL

AECOM Kimley»Horn

90% SUBMISSION - 01/22/16

METROPOLITAN COUNCIL

SOUTHWEST Green Line LRT Extension

CIVIL - VOLUME 4G
5TH AVENUE AND 7TH STREET
BRIDGE 27C18
PIER 3 DETAILS 1

DISCIPLINE: STRUCTURES
SHEET NAME: CBR27C18-BRG-PIR-006

SHEET 34 OF 148

Jan. 19 2016 02:11 pm V:\3400_ADC\CAD\SEGMENT E4\PLAN SHEETS\STRUCTURES\27C18\CBR27C18-BRG-PIR-006.dwg By: mark.krzyzewski

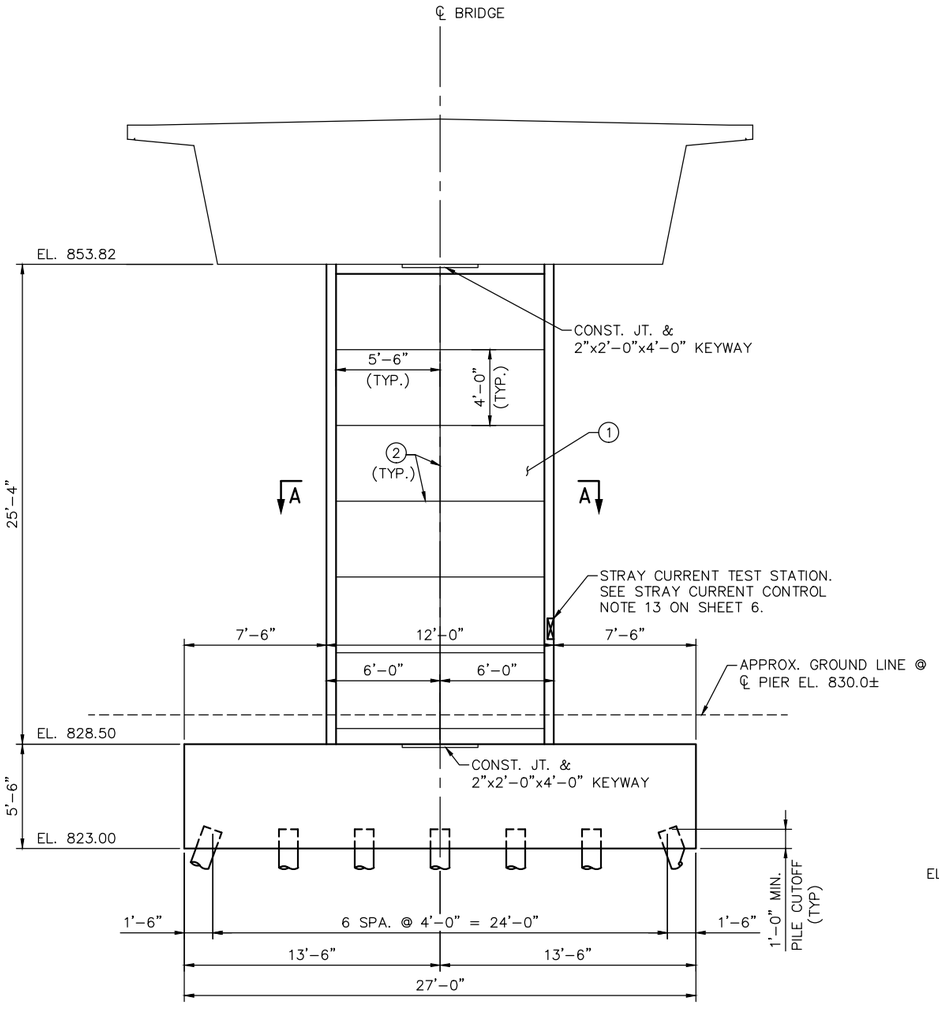

ELEVATION

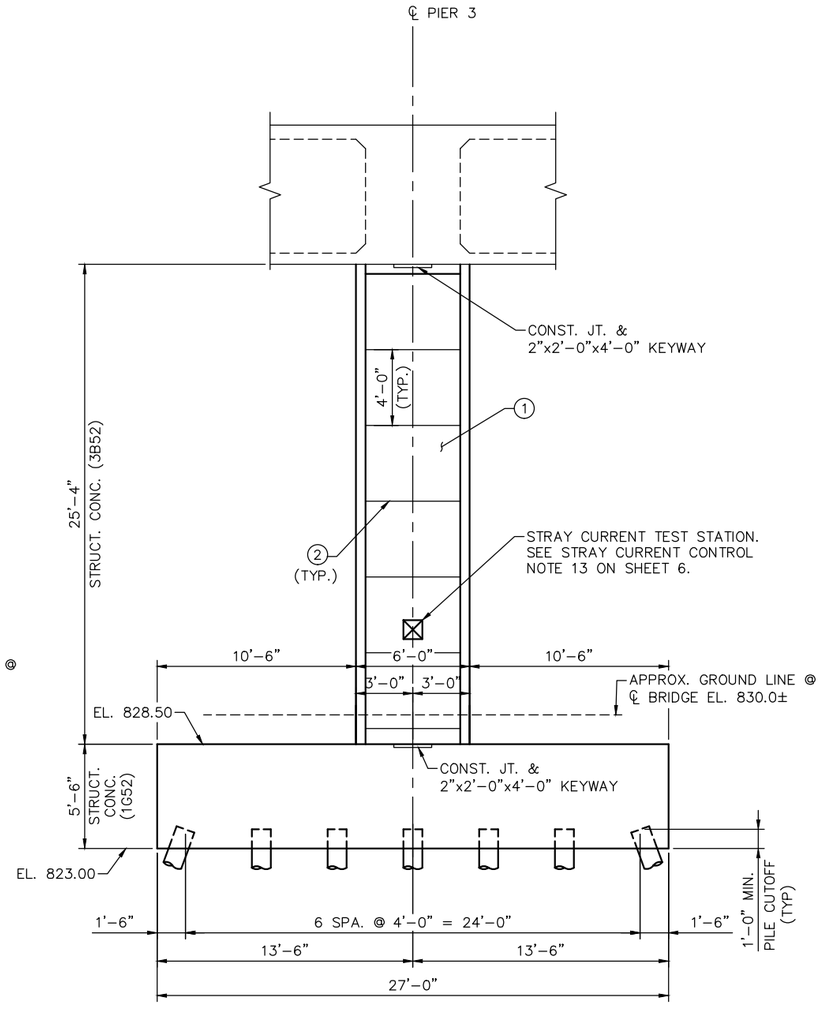

END ELEVATION

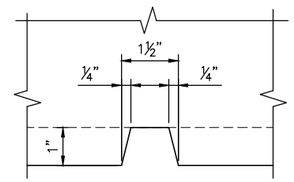

REVEAL DETAIL

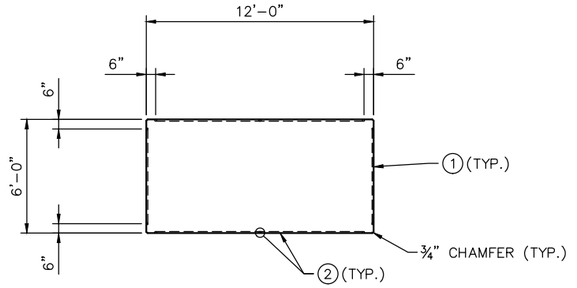

SECTION A–A

NOTES:

1. ARCHITECTURAL CONCRETE TEXTURE (RECTANGULAR GRID) WITH ARCHITECTURAL SURFACE FINISH (SINGLE COLOR).
2. SEE REVEAL DETAIL THIS SHEET.

NO.	DATE	BY	CHECK	DESIGN	REVISION / SUBMITTAL

DESIGNED BY: KJK CHECKED BY: DJL
DRAWN BY: MSK CHECKED BY: DJL

AECOM Kimley»Horn

90% SUBMISSION - 01/22/16

METROPOLITAN COUNCIL

SOUTHWEST Green Line LRT Extension

CIVIL - VOLUME 4G
5TH AVENUE AND 7TH STREET
BRIDGE 27C18
PIER 3 DETAILS 2

DISCIPLINE: STRUCTURES
SHEET NAME: CBR27C18-BRG-PIR-007-1

SHEET 35 OF 148

Jan, 19 2016 02:12 pm V:\3400_ADC\CAD\SEGMENT E4\PLAN SHEETS\STRUCTURES\27C18\CBR27C18-BRG-PIR-007-1.dwg By: mark.krzyzewski

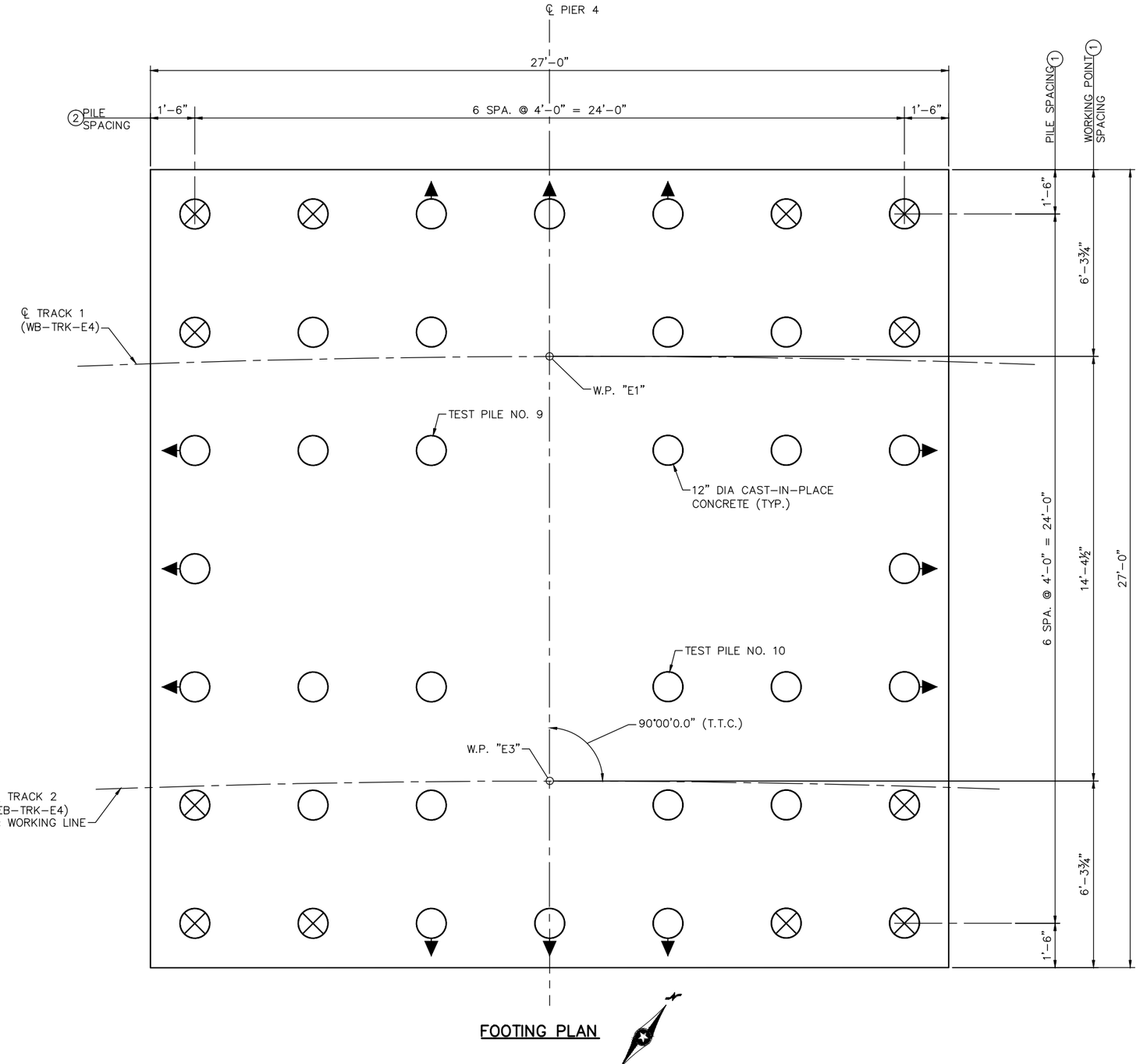

FOOTING PLAN

PIER 4 COMPUTED PILE LOAD - TONS/PILE	
FACTORED DEAD LOAD	
FACTORED LIVE LOAD	
FACTORED OVERTURNING	
FACTORED DESIGN UPLIFT	
* FACTORED DESIGN LOAD	81
* BASED ON STRENGTH V LOAD COMBINATION.	

PIER 4 REQUIRED NOMINAL PILE BEARING RESISTANCE FOR CIP PILES Rn - TONS/PILE		
FIELD CONTROL METHOD	φdyn	* Rn
PDA	0.65	125
* Rn = (FACTORED DESIGN LOAD) / φdyn		

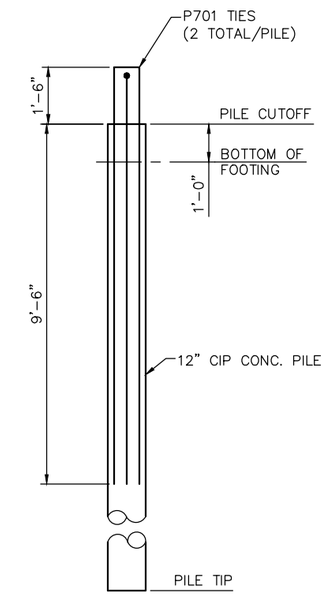

PILE ANCHORAGE DETAIL

GENERAL PILE NOTES

2 CAST-IN-PLACE CONCRETE TEST PILES 100 FT. LONG
38 CAST-IN-PLACE CONCRETE PILES EST. 90 FT. LENGTH
40 CAST-IN-PLACE CONCRETE PILES REQ'D FOR PIER 3.

PILE SPACING SHOWN IS AT PILE CUTOFF.

PILES MARKED THUS ○ TO BE BATTERED 3" PER FOOT IN DIRECTION SHOWN.

PILES TO HAVE A NOMINAL DIAMETER OF 12" AND 5/16" WALL THICKNESS.

FOR PILE SPLICE DETAILS SEE DETAIL B201.

NOTES:

(1) DIMENSIONS MEASURED ALONG ℄ PIER.

(2) DIMENSIONS MEASURED NORMAL TO ℄ PIER.

⊗ INDICATES TENSION PILE. SEE PILE ANCHORAGE DETAILS.

NO.	DATE	BY	CHECK	DESIGN	REVISION / SUBMITTAL

DESIGNED BY: KJK CHECKED BY: DJL
DRAWN BY: MSK CHECKED BY: DJL

AECOM Kimley»Horn

90% SUBMISSION - 01/22/16

METROPOLITAN COUNCIL

SOUTHWEST Green Line LRT Extension

CIVIL - VOLUME 4G
5TH AVENUE AND 7TH STREET
BRIDGE 27C18
PIER 4 DETAILS 1

DISCIPLINE: STRUCTURES
SHEET NAME: CBR27C18-BRG-PIR-008

SHEET 36 OF 148

Jan. 19 2016 02:12 pm V:\3400_ADC\CAD\SEGMENT E4\PLAN SHEETS\STRUCTURES\27C18\CBR27C18-BRG-PIR-008.dwg By: mark.krzyzewski

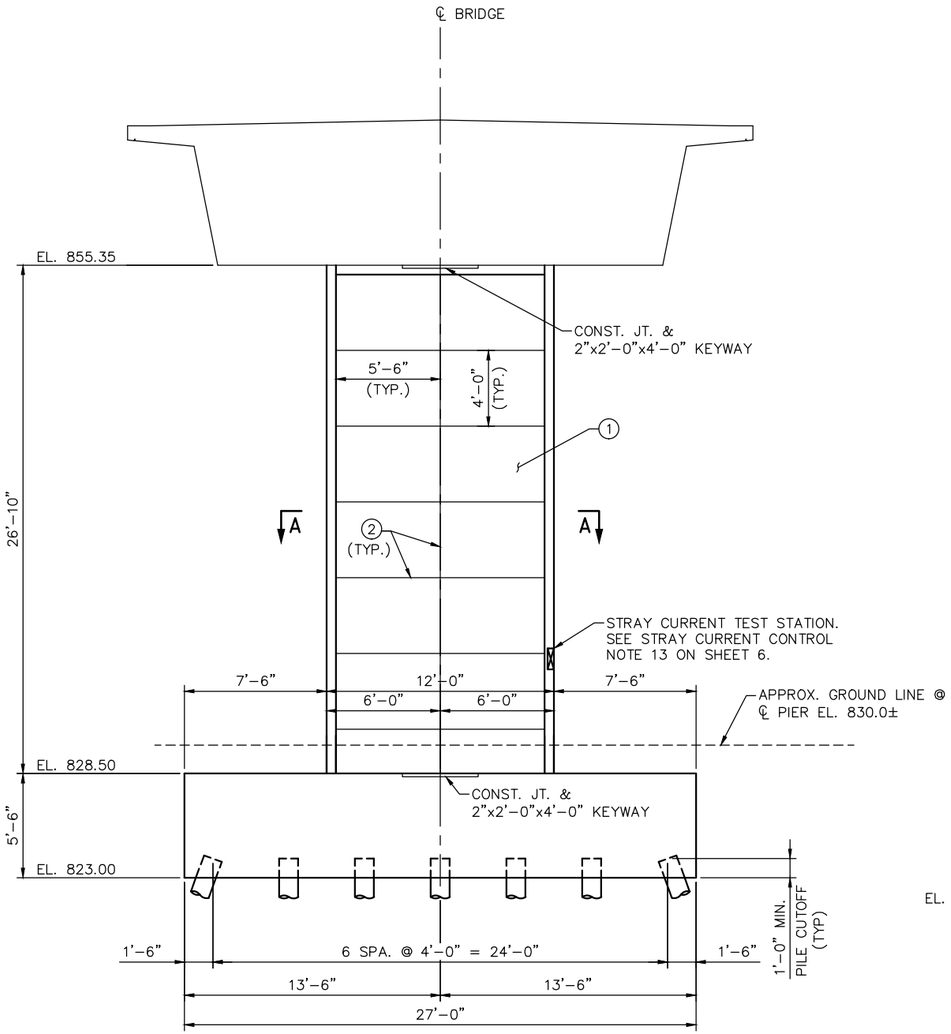

ELEVATION

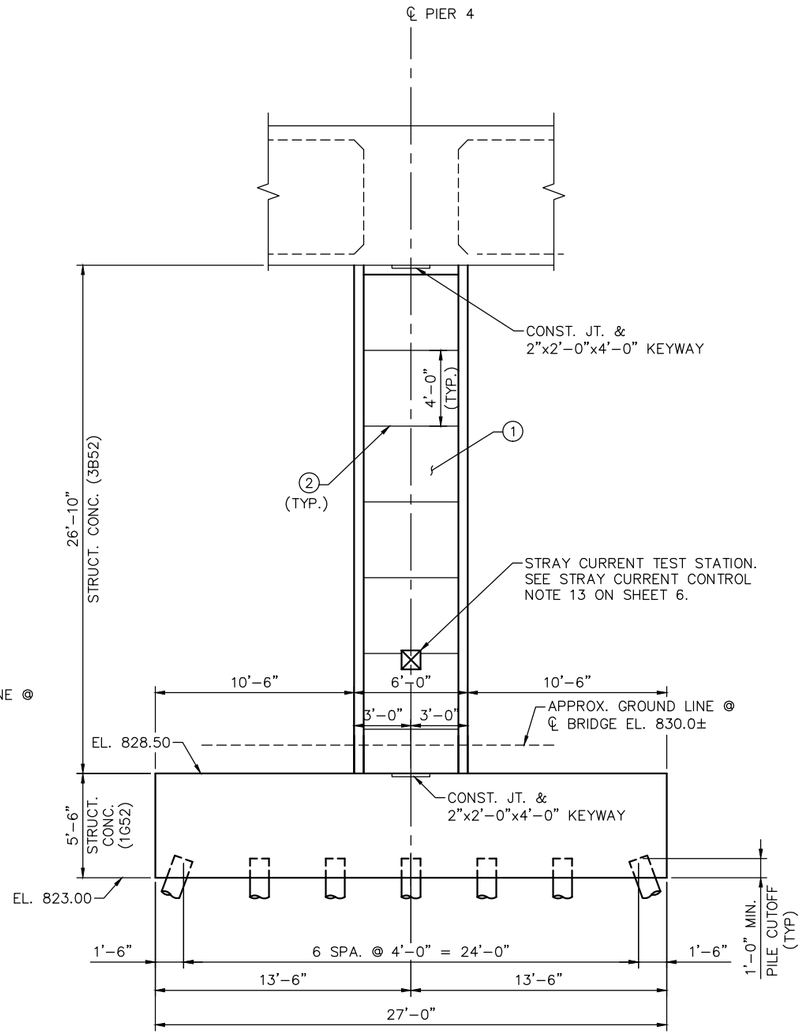

END ELEVATION

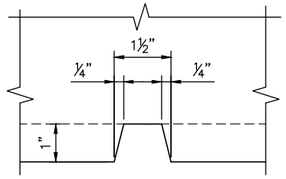

REVEAL DETAIL

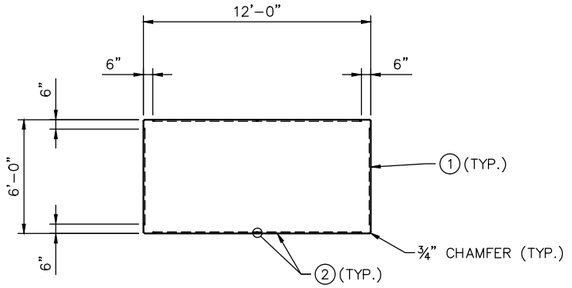

SECTION A–A

NOTES:

1. ARCHITECTURAL CONCRETE TEXTURE (RECTANGULAR GRID) WITH ARCHITECTURAL SURFACE FINISH (SINGLE COLOR).
2. SEE REVEAL DETAIL THIS SHEET.

NO.	DATE	BY	CHECK	DESIGN	REVISION / SUBMITTAL

DESIGNED BY: KJK CHECKED BY: DJL
DRAWN BY: MSK CHECKED BY: DJL

AECOM Kimley»Horn

90% SUBMISSION - 01/22/16

METROPOLITAN COUNCIL

SOUTHWEST Green Line LRT Extension

CIVIL - VOLUME 4G
5TH AVENUE AND 7TH STREET
BRIDGE 27C18
PIER 4 DETAILS 2

DISCIPLINE: STRUCTURES

SHEET NAME: CBR27C18-BRG-PIR-009-1

SHEET 37 OF 148

Jan, 19 2016 02:12 pm V:\3400_ADC\CAD\SEGMENT E4\PLAN SHEETS\STRUCTURES\27C18\CBR27C18-BRG-PIR-009-1.dwg By: mark.krzyzewski

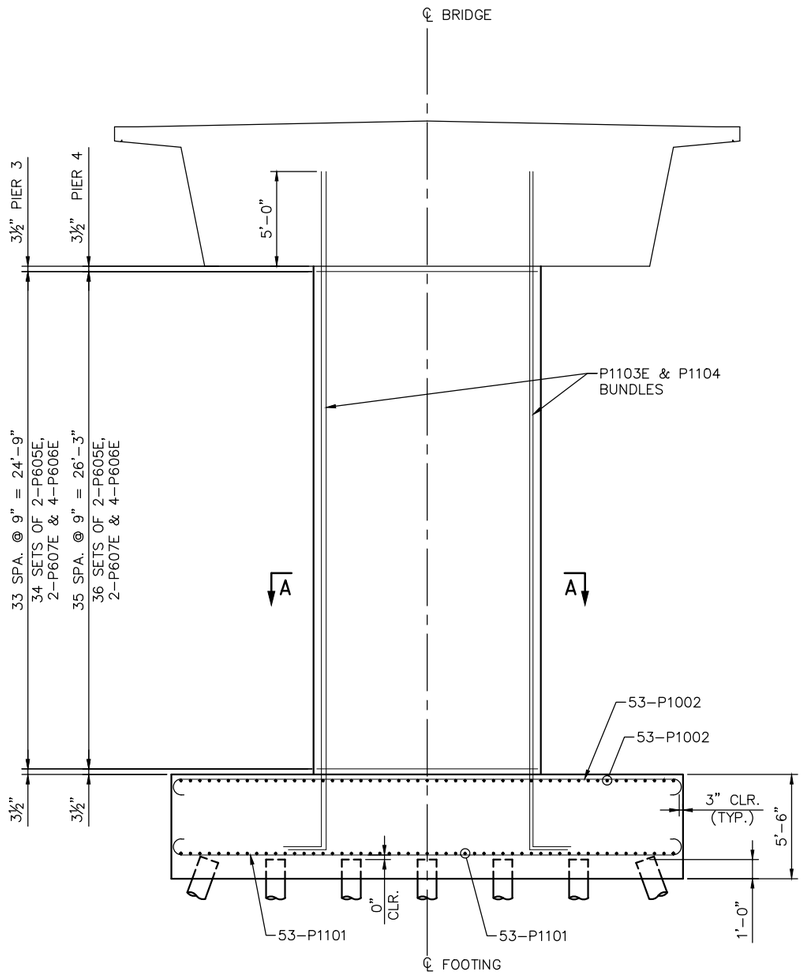

ELEVATION

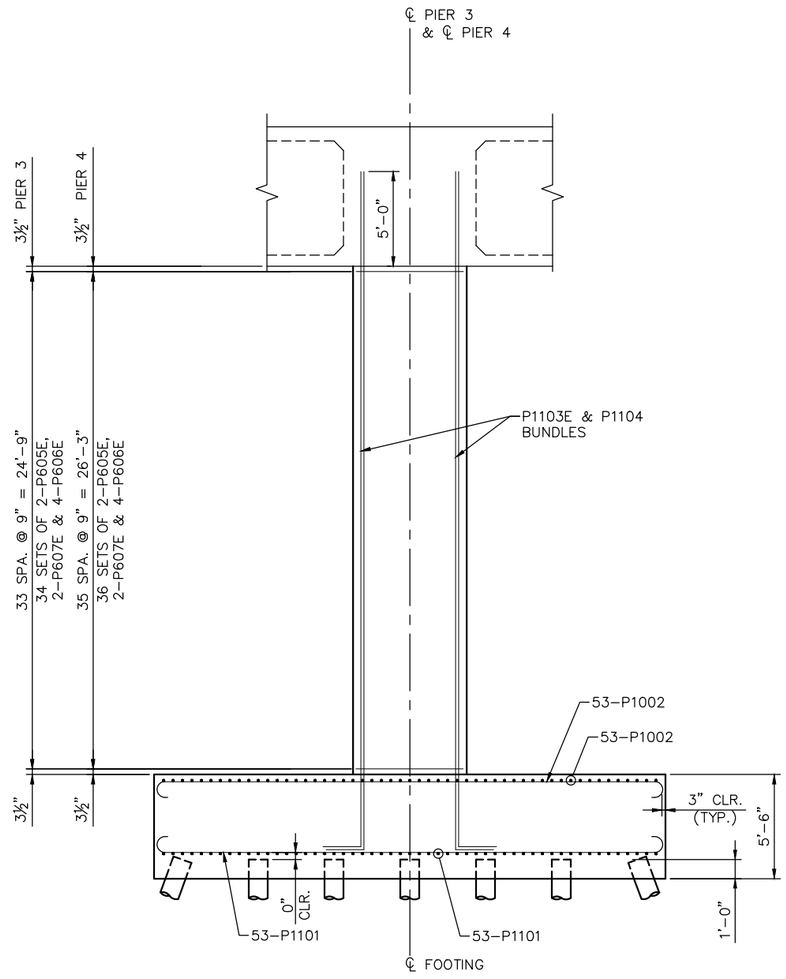

END ELEVATION

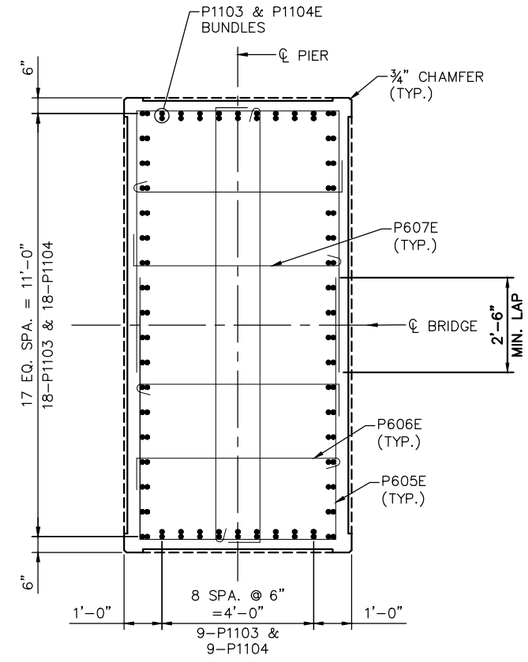

SECTION A-A

NO.	DATE	BY	CHECK	DESIGN	REVISION / SUBMITTAL

DESIGNED BY: KJK | CHECKED BY: DJL
DRAWN BY: MSK | CHECKED BY: DJL

AECOM Kimley»Horn

90% SUBMISSION - 01/22/16

METROPOLITAN COUNCIL

SOUTHWEST Green Line LRT Extension

CIVIL - VOLUME 4G
5TH AVENUE AND 7TH STREET
BRIDGE 27C18
PIER 3 & 4 REINFORCMENT 1

DISCIPLINE: STRUCTURES
SHEET NAME: CBR27C18-BRG-PIR-009-2

SHEET 38 OF 148

Jan. 19 2016 02:12 pm V:\3400_ADC\CAD\SEGMENT E4\PLAN SHEETS\STRUCTURES\27C18\CBR27C18-BRG-PIR-009-1.dwg By: mark.krzyzewski

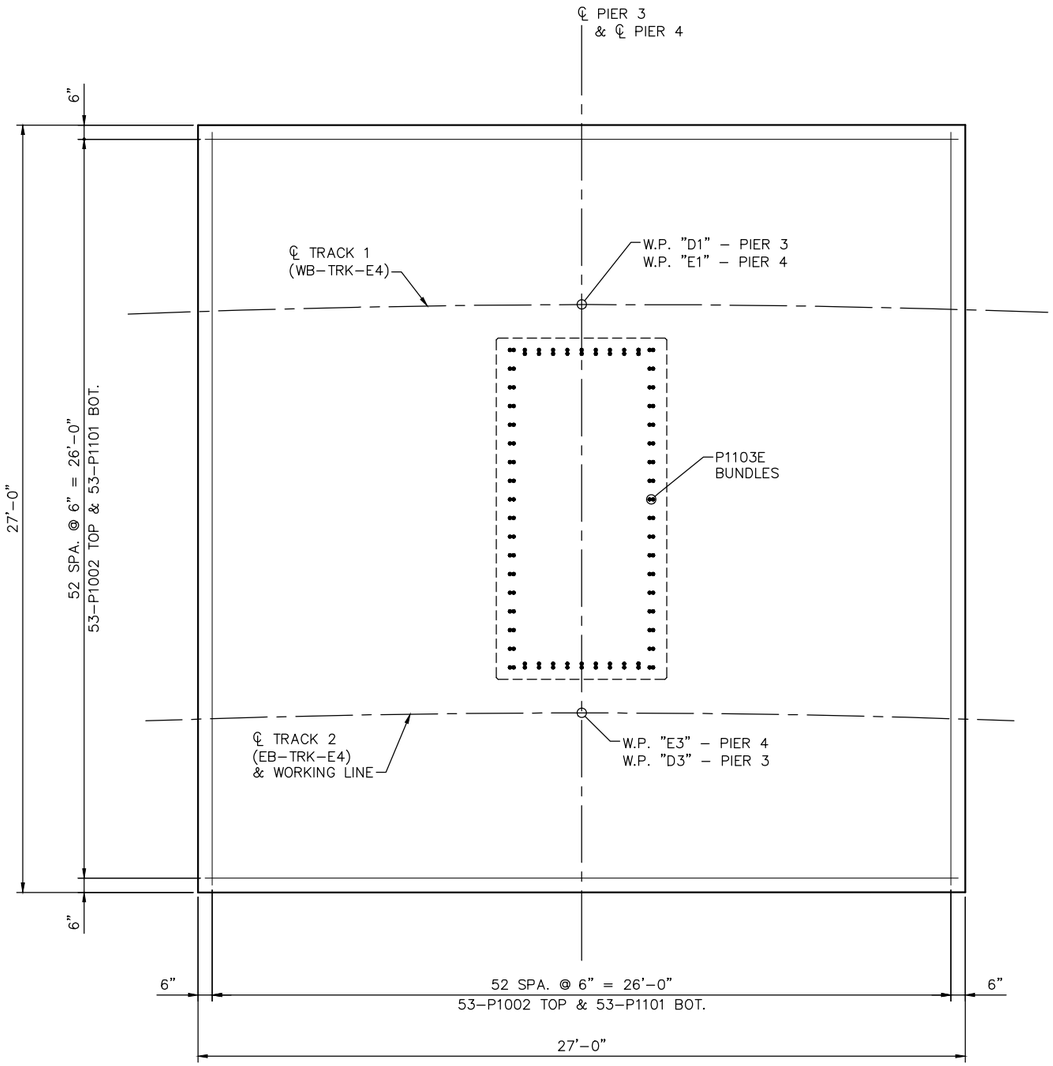

FOOTING REINFORCING PLAN

BILL OF REINFORCEMENT FOR PIER 3				
BAR	NO.	LENGTH	SHAPE	LOCATION
3P1101	106	'-"	BENT	FOOTING, BOT. TRANS. & LONG.
3P1002	106	'-"	BENT	FOOTING, BOT. TRANS. & LONG.
3P1103E	54	'-"	BENT	COLUMN DOWELS
3P1104E	54	'-"	BENT	COLUMN DOWELS
3P605E	68	'-"	BENT	COLUMN TIE, OUTSIDE
3P606E	136	'-"	BENT	COLUMN TIE, INTERIOR
3P607E	68	'-"	BENT	COLUMN TIE, INTERIOR

BILL OF REINFORCEMENT FOR PIER 4				
BAR	NO.	LENGTH	SHAPE	LOCATION
4P1101	106	'-"	BENT	FOOTING, BOT. TRANS. & LONG.
4P1002	106	'-"	BENT	FOOTING, BOT. TRANS. & LONG.
4P1103E	54	'-"	BENT	COLUMN DOWELS
4P1104E	54	'-"	BENT	COLUMN DOWELS
4P605E	72	'-"	BENT	COLUMN TIE, OUTSIDE
4P606E	144	'-"	BENT	COLUMN TIE, INTERIOR
4P607E	72	'-"	BENT	COLUMN TIE, INTERIOR

NO.	DATE	BY	CHECK	DESIGN	REVISION / SUBMITTAL

DESIGNED BY: KJK CHECKED BY: DJL
DRAWN BY: MSK CHECKED BY: DJL

AECOM Kimley»Horn

90% SUBMISSION - 01/22/16

METROPOLITAN COUNCIL

SOUTHWEST Green Line LRT Extension

CIVIL - VOLUME 4G
5TH AVENUE AND 7TH STREET
BRIDGE 27C18
PIER 3 & 4 REINFORCMENT 2

DISCIPLINE: STRUCTURES
SHEET NAME: CBR27C18-BRG-PIR-009-3

SHEET 39 OF 148

Jan, 19 2016 02:13 pm V:\3400_ADC\CAD\SEGMENT E4\PLAN SHEETS\STRUCTURES\27C18\CBR27C18-BRG-PIR-009-1.dwg By: mark.krzyzewski

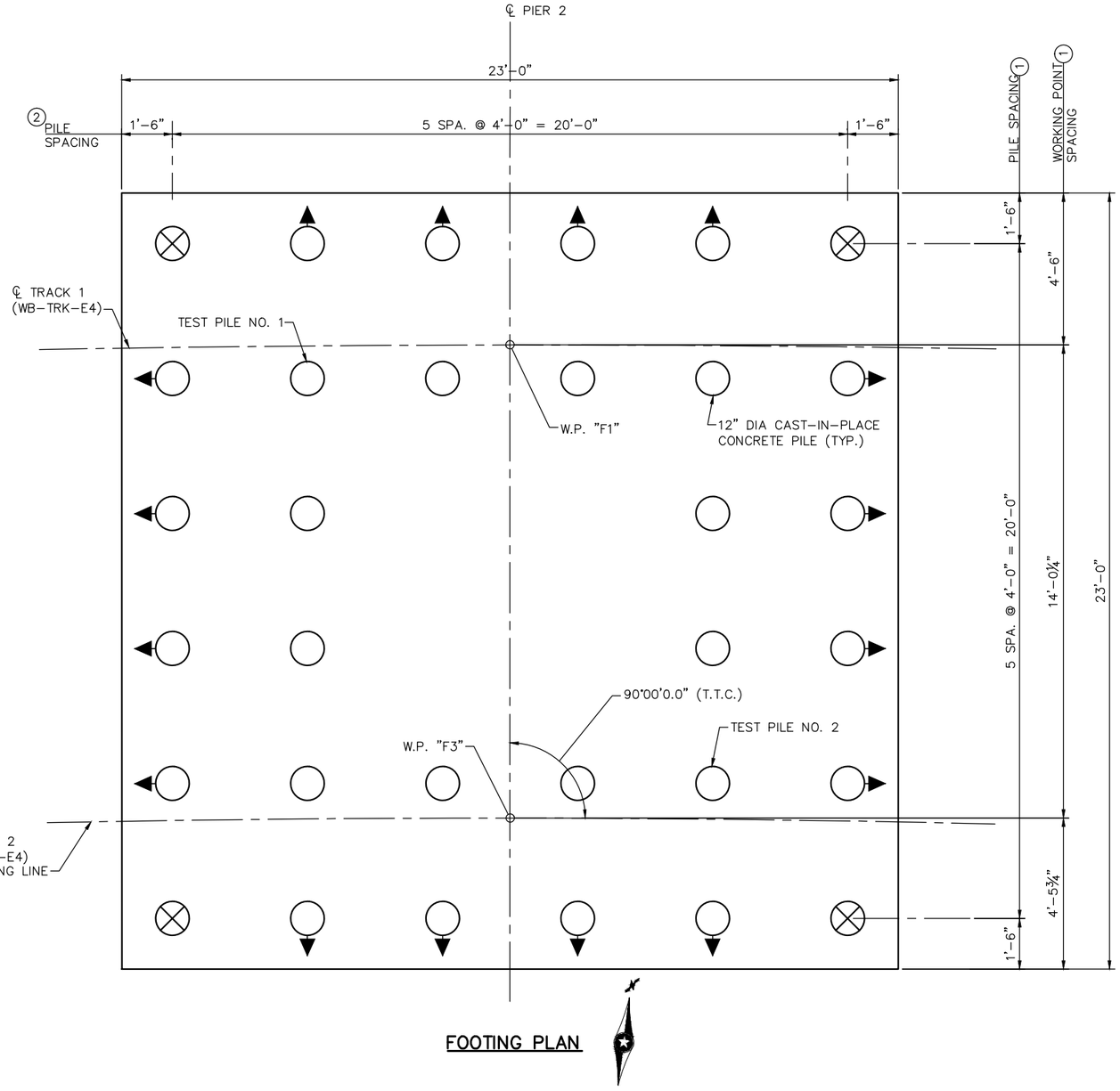

FOOTING PLAN

PIER 5 COMPUTED PILE LOAD - TONS/PILE	
FACTORED DEAD LOAD	
FACTORED LIVE LOAD	
FACTORED OVERTURNING	
FACTORED DESIGN UPLIFT	
* FACTORED DESIGN LOAD	84
* BASED ON STRENGTH V LOAD COMBINATION.	

PIER 5 REQUIRED NOMINAL PILE BEARING RESISTANCE FOR CIP PILES Rn - TONS/PILE		
FIELD CONTROL METHOD	φdyn	* Rn
PDA	0.65	130
* Rn = (FACTORED DESIGN LOAD) / φdyn		

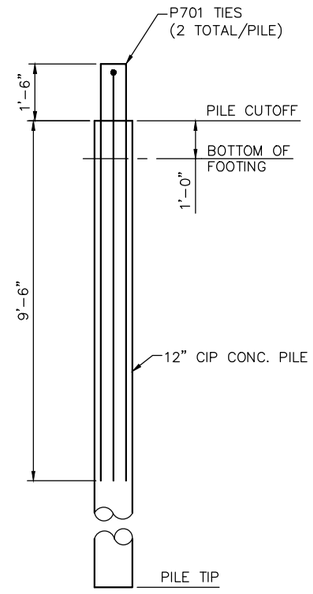

PILE ANCHORAGE DETAIL

GENERAL PILE NOTES

2 CAST-IN-PLACE CONCRETE TEST PILES 90 FT. LONG
30 CAST-IN-PLACE CONCRETE PILES EST. 80 FT. LENGTH
32 CAST-IN-PLACE CONCRETE PILES REQ'D FOR PIER 5.

PILE SPACING SHOWN IS AT PILE CUTOFF.

PILES MARKED THUS ◯ TO BE BATTERED 3" PER FOOT IN DIRECTION SHOWN.

PILES TO HAVE A NOMINAL DIAMETER OF 12" AND 5/16" WALL THICKNESS.

FOR PILE SPLICE DETAILS SEE DETAIL B201.

NOTES:

① DIMENSIONS MEASURED ALONG ℄ PIER.

② DIMENSIONS MEASURED NORMAL TO ℄ PIER.

⊗ INDICATES TENSION PILE. SEE PILE ANCHORAGE DETAILS.

NO.	DATE	BY	CHECK	DESIGN	REVISION / SUBMITTAL

DESIGNED BY: KJK CHECKED BY: DJL
DRAWN BY: MSK CHECKED BY: DJL

AECOM Kimley»Horn

90% SUBMISSION - 01/22/16

METROPOLITAN COUNCIL

SOUTHWEST Green Line LRT Extension

CIVIL - VOLUME 4G
5TH AVENUE AND 7TH STREET BRIDGE 27C18
PIER 5 DETAILS 1

DISCIPLINE: STRUCTURES

SHEET NAME: CBR27C18-BRG-PIR-010

SHEET 40 OF 148

Jan. 19 2016 02:13 pm V:\3400_ADC\CAD\SEGMENT E4\PLAN SHEETS\STRUCTURES\27C18\CBR27C18-BRG-PIR-010.dwg By: mark.krzyzewski

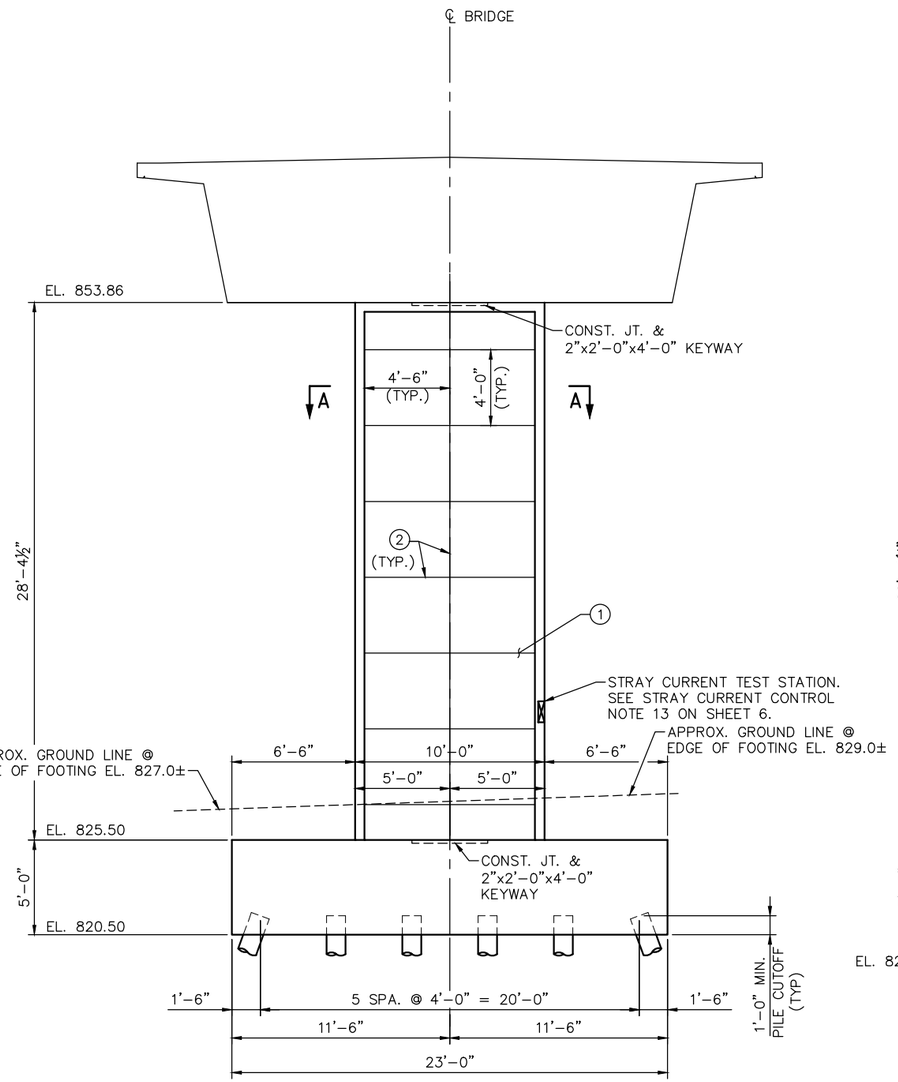

ELEVATION

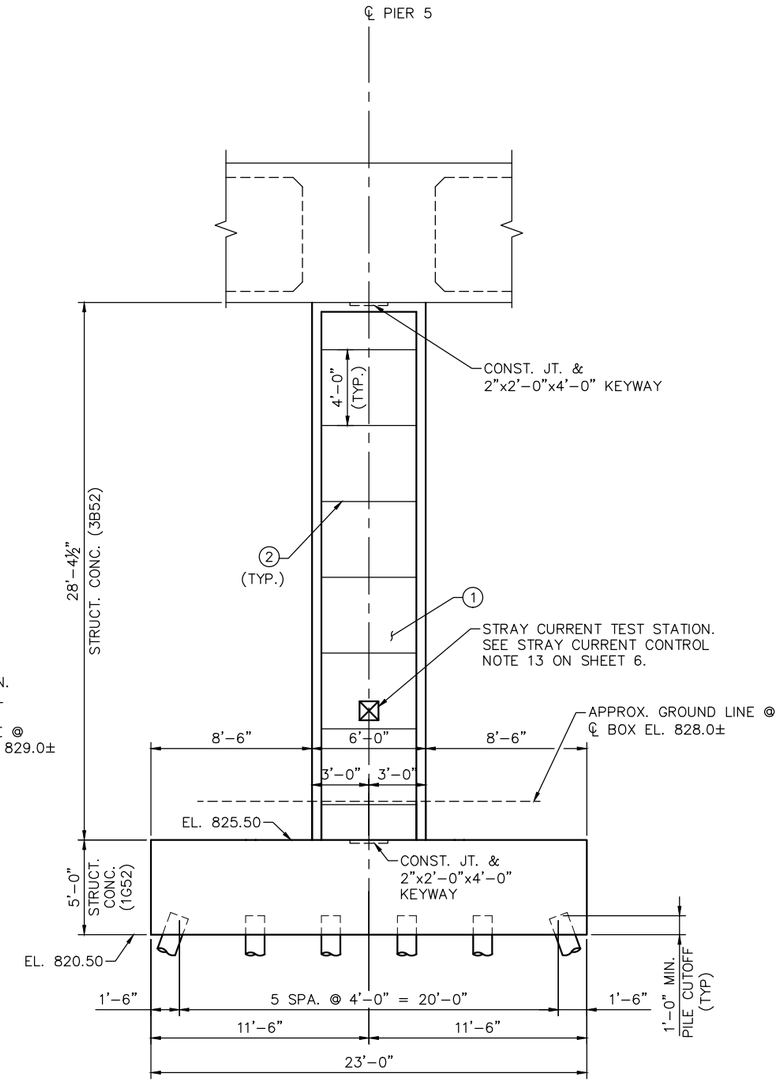

END ELEVATION

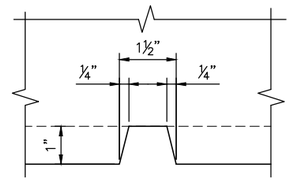

REVEAL DETAIL

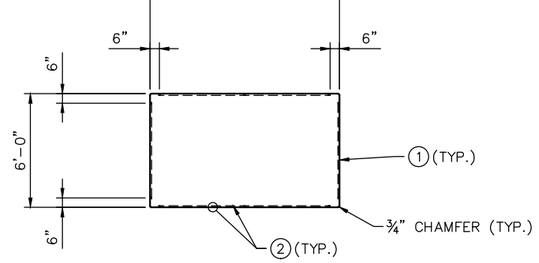

SECTION A–A

NOTES:

1. ARCHITECTURAL CONCRETE TEXTURE (RECTANGULAR GRID) WITH ARCHITECTURAL SURFACE FINISH (SINGLE COLOR).
2. SEE REVEAL DETAIL THIS SHEET.

NO.	DATE	BY	CHECK	DESIGN	REVISION / SUBMITTAL

DESIGNED BY: KJK CHECKED BY: DJL
DRAWN BY: MSK CHECKED BY: DJL

AECOM Kimley»Horn

90% SUBMISSION - 01/22/16

METROPOLITAN COUNCIL

SOUTHWEST Green Line LRT Extension

CIVIL - VOLUME 4G
5TH AVENUE AND 7TH STREET BRIDGE 27C18
PIER 5 DETAILS 2

DISCIPLINE: STRUCTURES

SHEET NAME: CBR27C18-BRG-PIR-011-1

SHEET 41 OF 148

Jan. 19 2016 02:13 pm V:\3400_ADC\CAD\SEGMENT E4\PLAN SHEETS\STRUCTURES\27C18\CBR27C18-BRG-PIR-011-1.dwg By: mark.krzyzewski

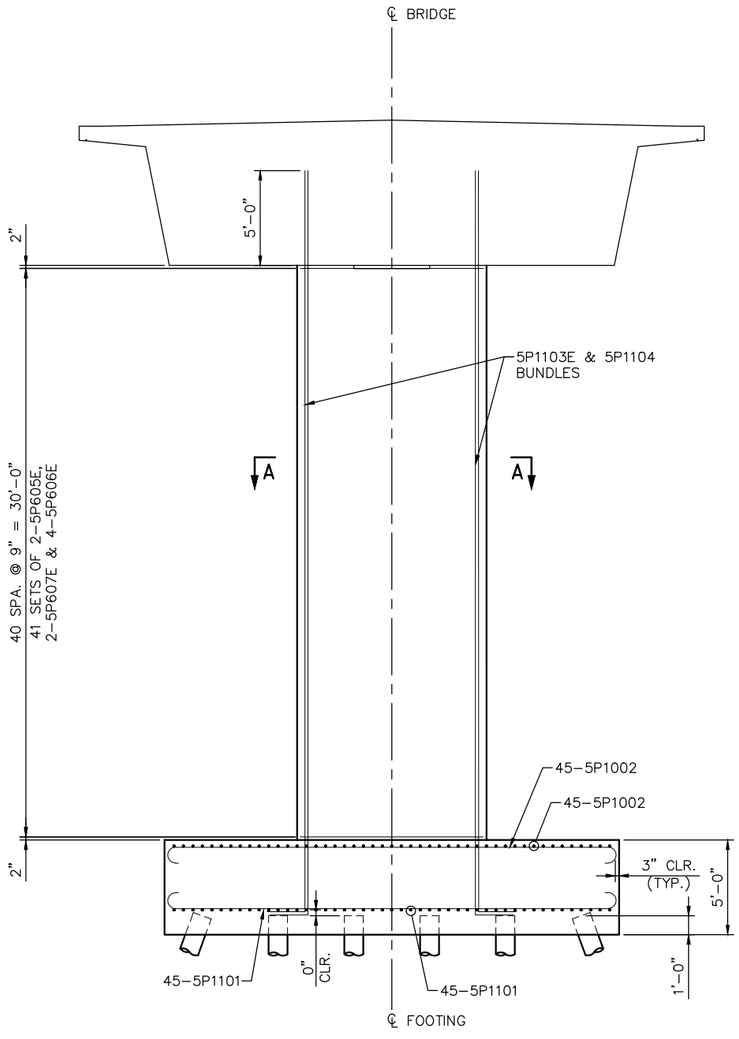

ELEVATION

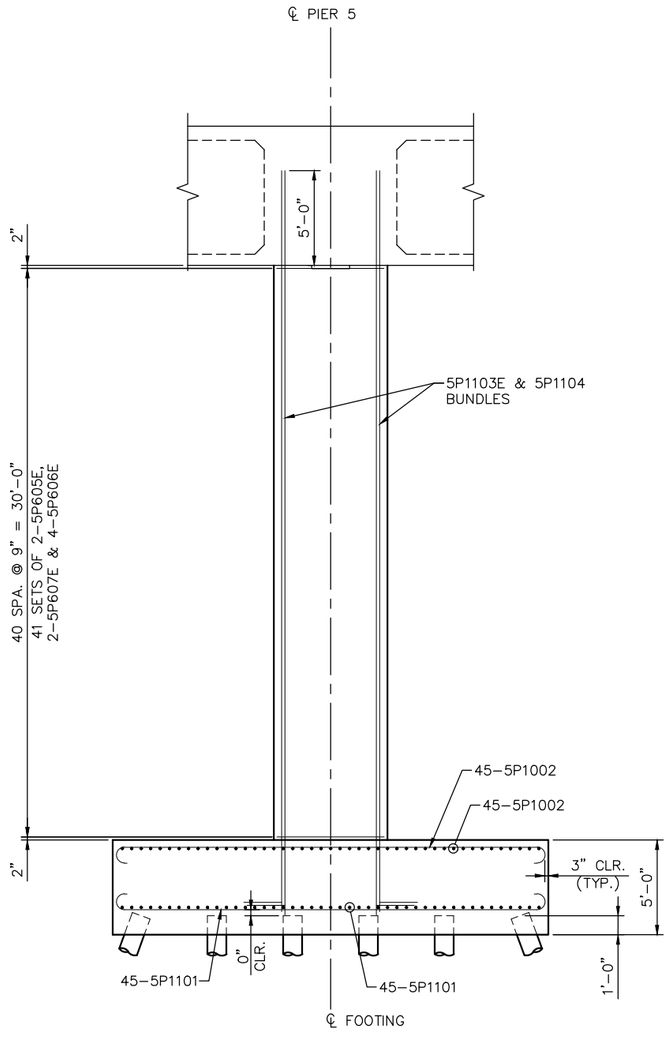

END ELEVATION

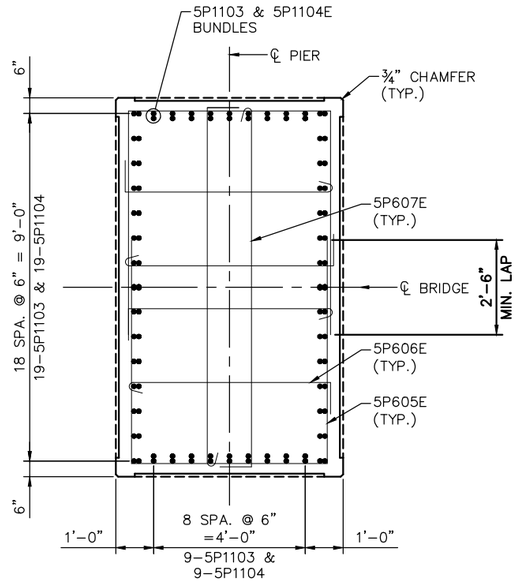

SECTION A-A

Jan. 19 2016 02:14 pm V:\3400_ADC\CAD\SEGMENT E4\PLAN SHEETS\STRUCTURES\27C18\CBR27C18-BRG-PIR-011-1.dwg By: mark.krzyzewski

NO.	DATE	BY	CHECK	DESIGN	REVISION / SUBMITTAL

DESIGNED BY: KJK CHECKED BY: DJL
DRAWN BY: MSK CHECKED BY: DJL

AECOM Kimley»Horn

90% SUBMISSION - 01/22/16

METROPOLITAN COUNCIL

SOUTHWEST Green Line LRT Extension

CIVIL - VOLUME 4G
5TH AVENUE AND 7TH STREET
BRIDGE 27C18
PIER 5 REINFORCMENT 1

DISCIPLINE: STRUCTURES

SHEET NAME: CBR27C18-BRG-PIR-011-2

SHEET 42 OF 148

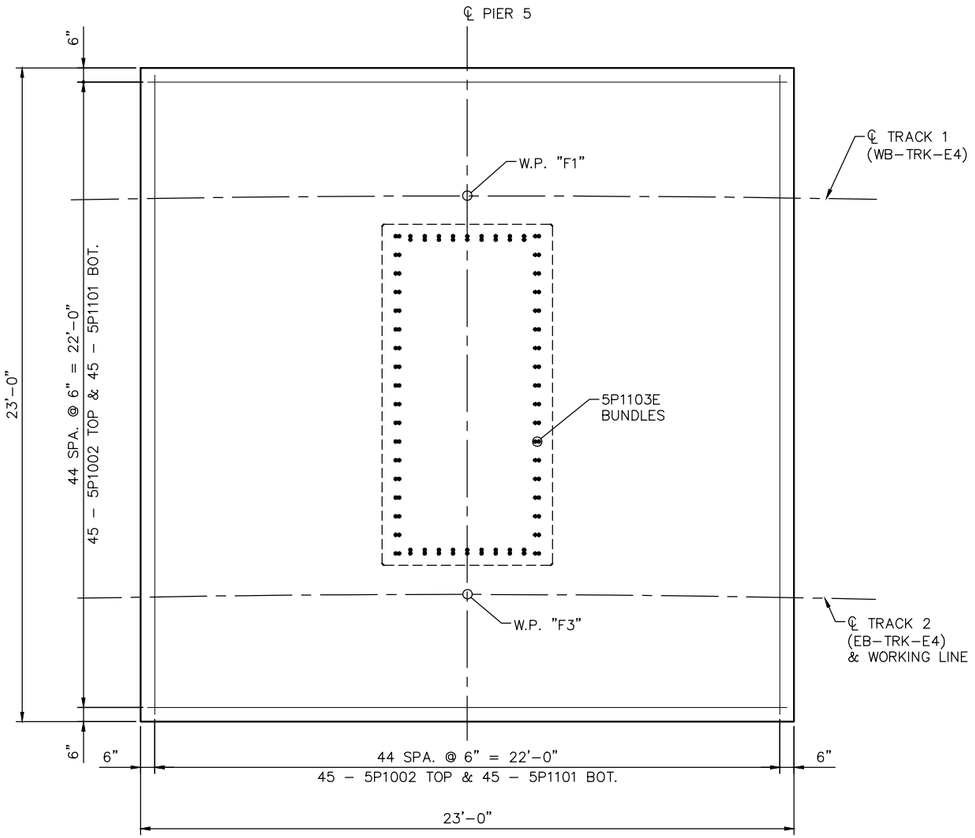

FOOTING

BILL OF REINFORCEMENT FOR PIER 5

BAR	NO.	LENGTH	SHAPE	LOCATION
5P1101	90	'-"	BENT	FOOTING, BOT. TRANS. & LONG.
5P1002	90	'-"	BENT	FOOTING, BOT. TRANS. & LONG.
5P1103E	56	'-"	BENT	COLUMN DOWELS
5P1104E	56	'-"	BENT	COLUMN DOWELS
5P605E	82	'-"	BENT	COLUMN TIE, OUTSIDE
5P606E	164	'-"	BENT	COLUMN TIE, INTERIOR
5P607E	82	'-"	BENT	COLUMN TIE, INTERIOR

NO.	DATE	BY	CHECK	DESIGN	REVISION / SUBMITTAL

DESIGNED BY: KJK CHECKED BY: DJL
DRAWN BY: MSK CHECKED BY: DJL

AECOM Kimley»Horn

90% SUBMISSION - 01/22/16

METROPOLITAN COUNCIL

SOUTHWEST Green Line LRT Extension

CIVIL - VOLUME 4G
5TH AVENUE AND 7TH STREET
BRIDGE 27C18
PIER 5 REINFORCMENT 2

DISCIPLINE: STRUCTURES
SHEET NAME: CBR27C18-BRG-PIR-011-3

SHEET 43 OF 148

Jan, 19 2016 02:14 pm V:\3400_ADC\CAD\SEGMENT E4\PLAN SHEETS\STRUCTURES\27C18\CBR27C18-BRG-PIR-011-1.dwg By: mark.krzyzewski

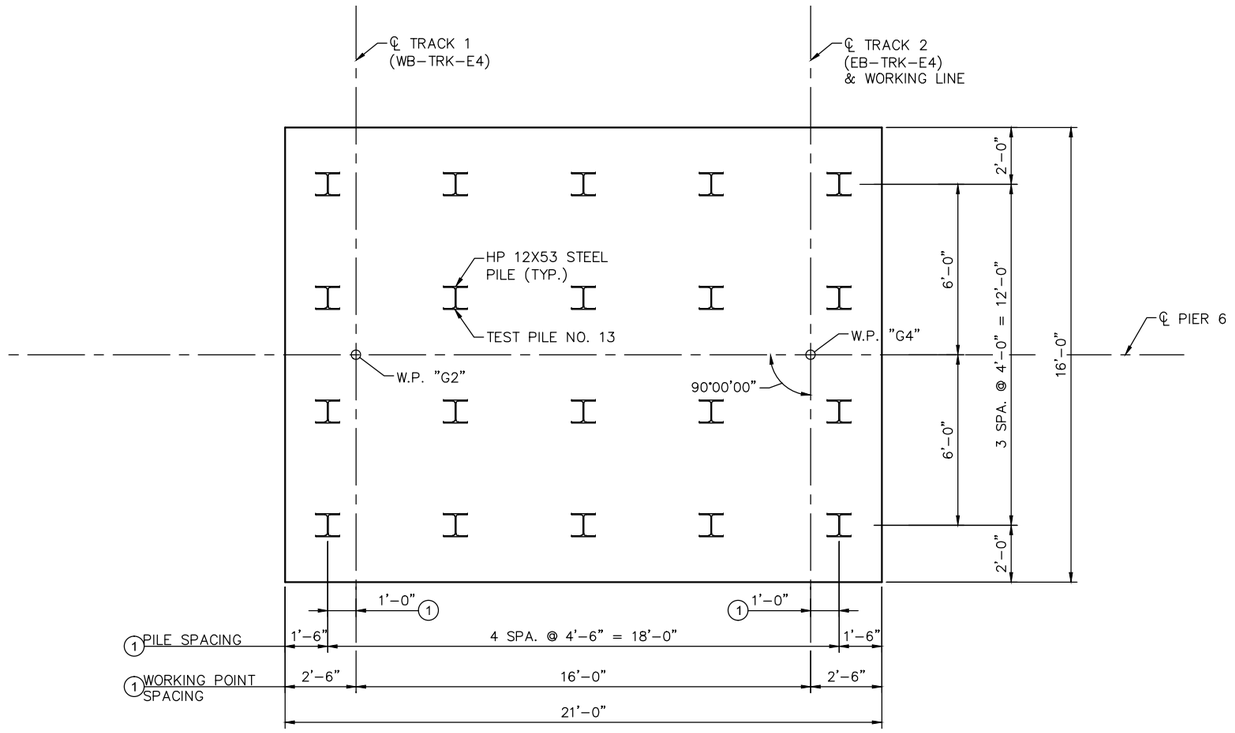

FOOTING PLAN

PIER 6 COMPUTED PILE LOAD - TONS/PILE	
FACTORED DEAD LOAD	53
FACTORED LIVE LOAD	19
FACTORED OVERTURNING	19
* FACTORED DESIGN LOAD	91
* BASED ON STRENGTH V LOAD COMBINATION.	

PIER 6 REQUIRED NOMINAL PILE BEARING RESISTANCE FOR H-PILES Rn - TONS/PILE		
FIELD CONTROL METHOD	φdyn	* Rn
PDA	0.65	140
* Rn = (FACTORED DESIGN LOAD) / φdyn		

GENERAL PILE NOTES

1 STEEL H–TEST PILES 95 FT. LONG
19 STEEL H–PILES EST. 85 FT. LENGTH
20 STEEL H–PILES REQ'D FOR PEIR 6

PILE SPACING SHOWN IS AT BOTTOM OF FOOTING.

ALL PILES TO BE HP12x53 WITH PILE TIP PROTECTION.

FOR PILE SPLICE DETAILS SEE DETAIL B202.

NOTES:

(1) DIMENSIONS MEASURED ALONG ℄ PIER

NO.	DATE	BY	CHECK	DESIGN	REVISION / SUBMITTAL

DESIGNED BY: DJL | CHECKED BY: KJK
DRAWN BY: MSK | CHECKED BY: KJK

AECOM Kimley»Horn

90% SUBMISSION - 01/22/16

METROPOLITAN COUNCIL

SOUTHWEST Green Line LRT Extension

CIVIL - VOLUME 4G
5TH AVENUE AND 7TH STREET
BRIDGE 27C18
PIER 6 DETAILS 1

DISCIPLINE: STRUCTURES
SHEET NAME: CBR27C18-BRG-PIR-012

SHEET 44 OF 148

Jan, 19 2016 08:59 am v:\3400_ADC\CAD\SEGMENT E4\PLAN SHEETS\STRUCTURES\27C18\CBR27C18-BRG-PIR-012.dwg By: Victor.Madrid

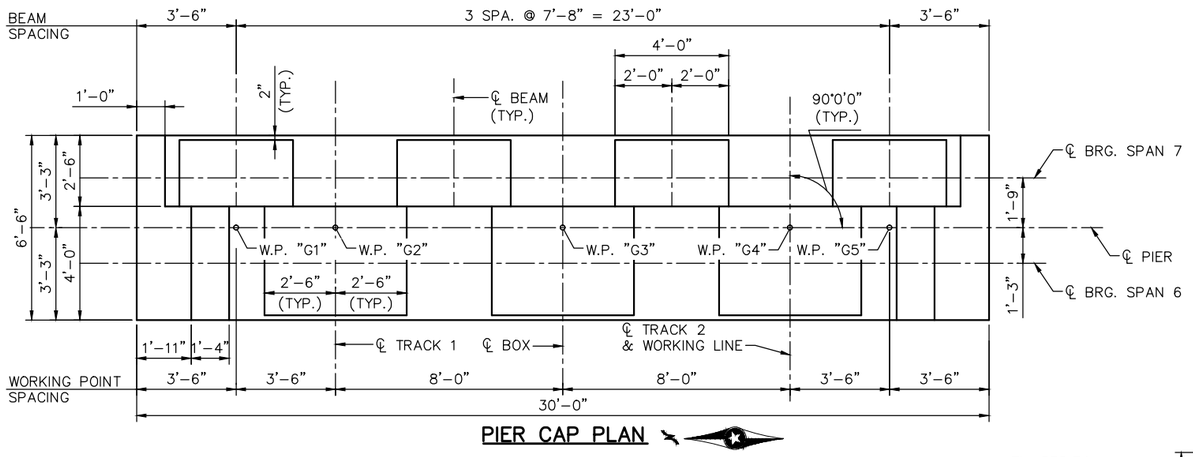

PIER CAP PLAN

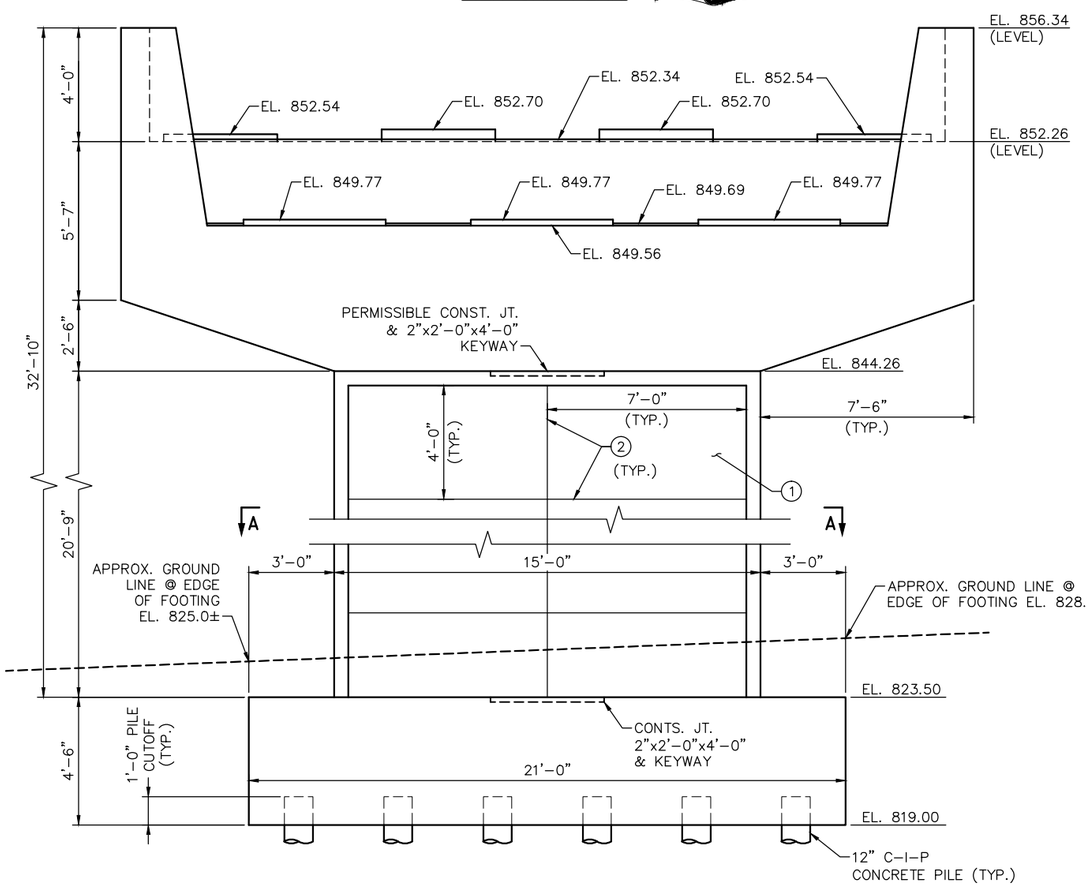

LOOKING UP STATION

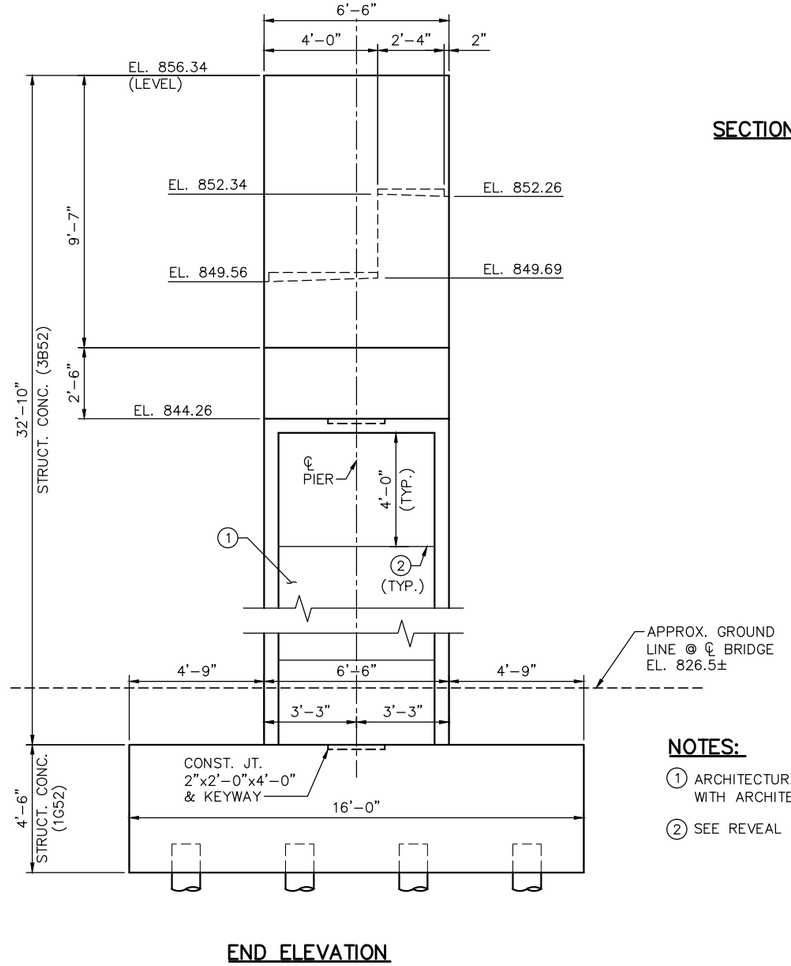

END ELEVATION

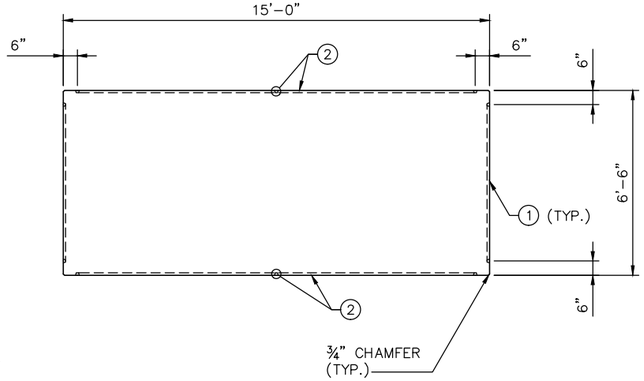

SECTION A-A

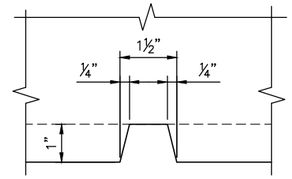

REVEAL DETAIL

NOTES:

1. ARCHITECTURAL CONCRETE TEXTURE (RECTANGULAR GRID) WITH ARCHITECTURAL FINISH (SINGLE COLOR).
2. SEE REVEAL DETAIL THIS SHEET.

NO.	DATE	BY	CHECK	DESIGN	REVISION / SUBMITTAL

DESIGNED BY: DJL | CHECKED BY: KJK
DRAWN BY: MSK | CHECKED BY: KJK

AECOM Kimley»Horn

90% SUBMISSION - 01/22/16

METROPOLITAN COUNCIL

SOUTHWEST Green Line LRT Extension

CIVIL - VOLUME 4G
5TH AVENUE AND 7TH STREET BRIDGE 27C18
PIER 6 DETAILS 2

DISCIPLINE: STRUCTURES

SHEET NAME: CBR27C18-BRG-PIR-013

SHEET 45 OF 148

Jan. 18 2016 02:40 pm v:\3400_ADC\CAD\SEGMENT E4\PLAN SHEETS\STRUCTURES\27C18\CBR27C18-BRG-PIR-013.dwg By: Victor.Madrid

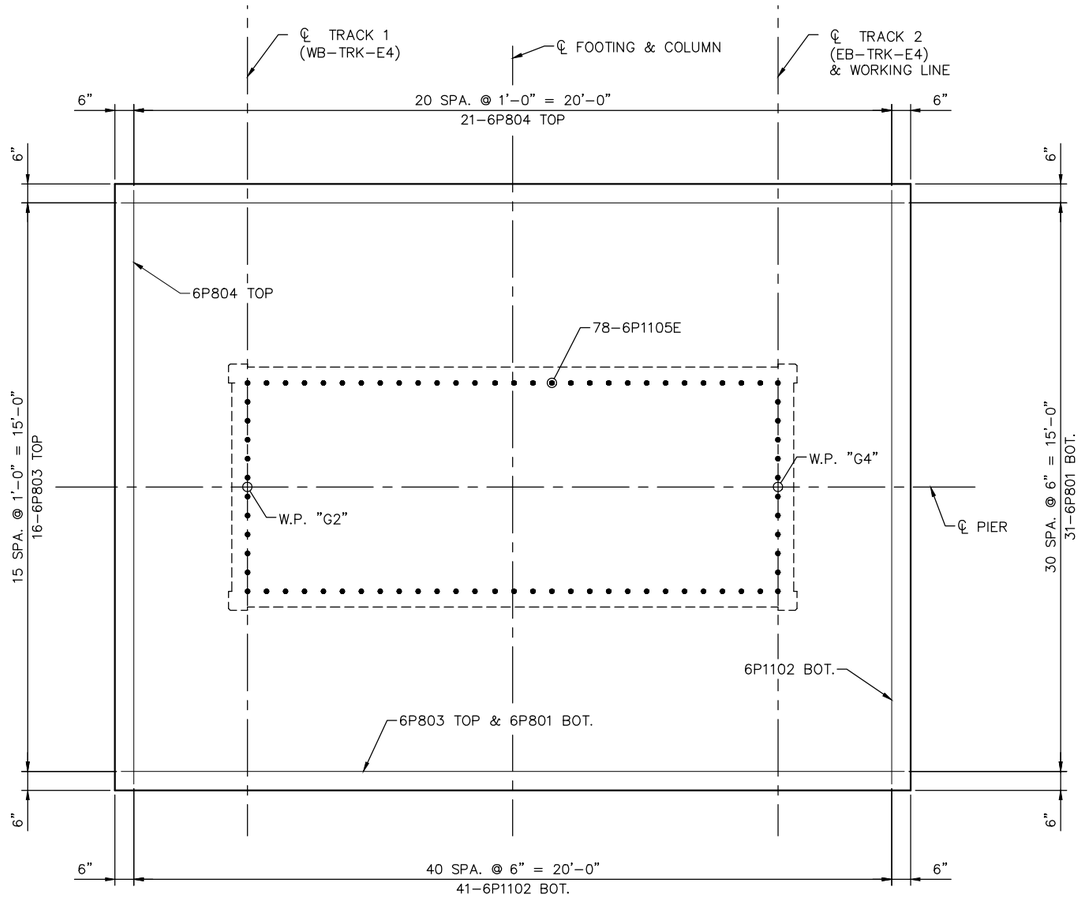

FOOTING PLAN

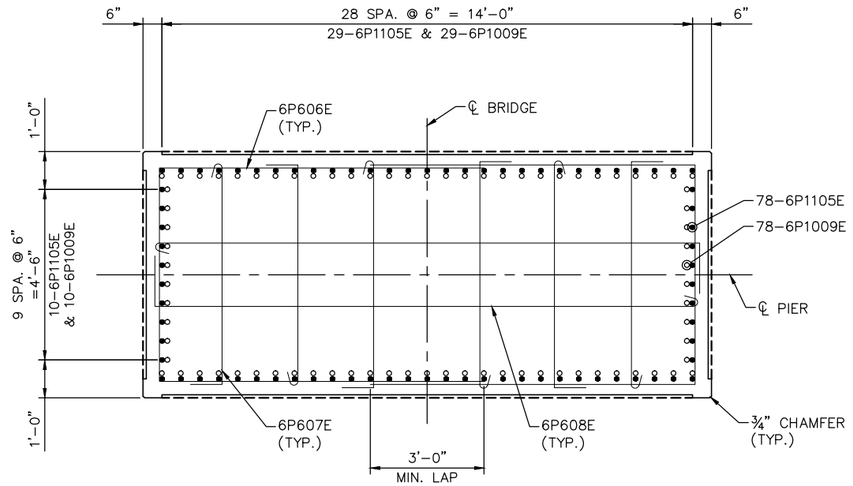

COLUMN SECTION

NO.	DATE	BY	CHECK	DESIGN	REVISION / SUBMITTAL

DESIGNED BY: DJL | CHECKED BY: KJK
DRAWN BY: MSK | CHECKED BY: KJK

AECOM Kimley»Horn

90% SUBMISSION - 01/22/16

METROPOLITAN COUNCIL

SOUTHWEST Green Line LRT Extension

CIVIL - VOLUME 4G
5TH AVENUE AND 7TH STREET BRIDGE 27C18
PIER 6 REINFORCMENT 1

DISCIPLINE: STRUCTURES

SHEET NAME: CBR27C18-BRG-PIR-014-1

SHEET 46 OF 148

Jan, 18 2016 02:41 pm V:\3400_ADC\CAD\SEGMENT E4\PLAN SHEETS\STRUCTURES\27C18\CBR27C18-BRG-PIR-014-1.dwg By: Victor.Madrid

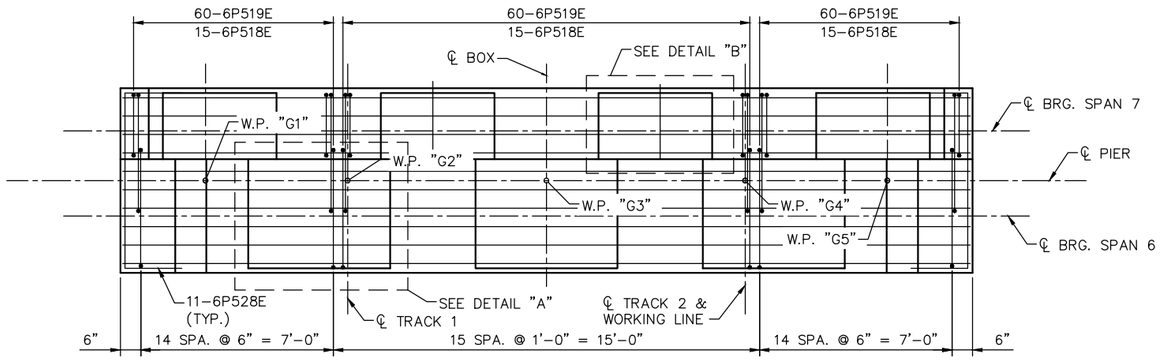

PIER CAP PLAN

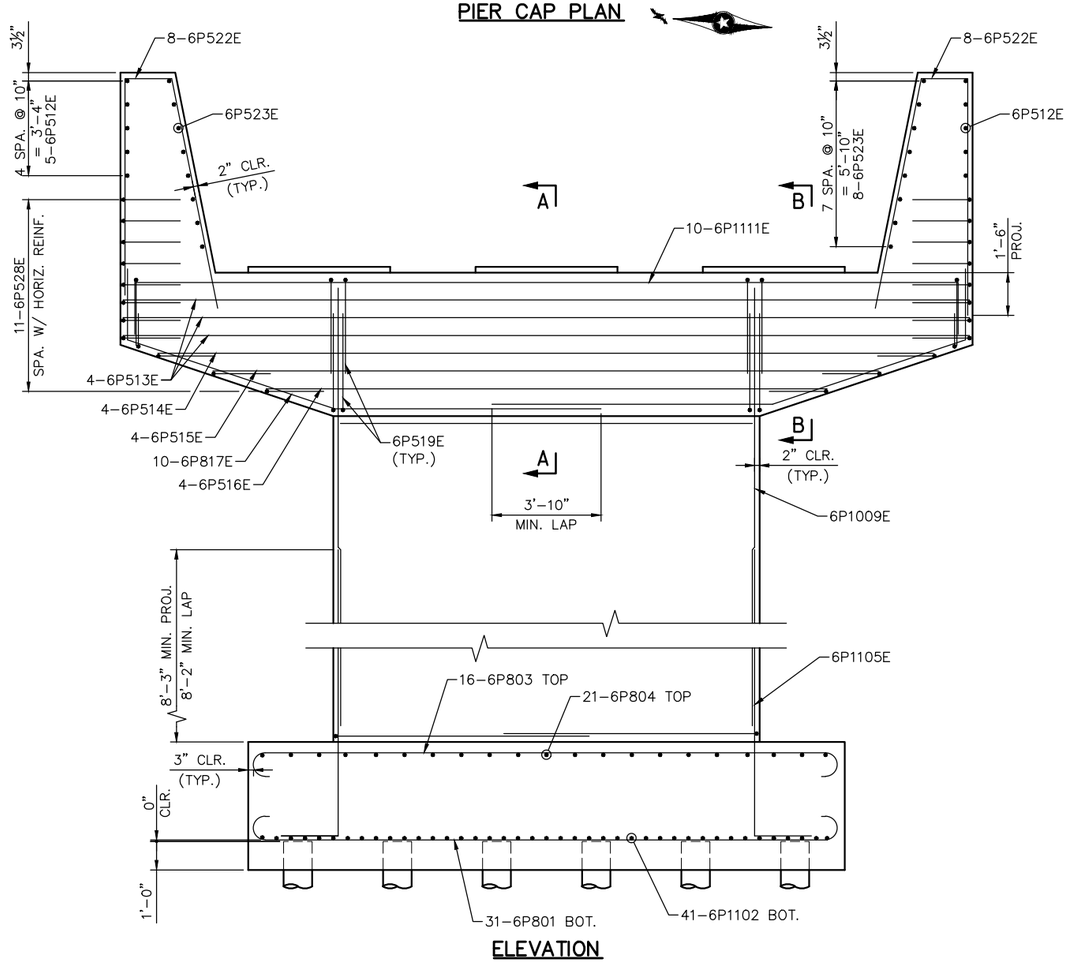

ELEVATION

(LOOKING FROM SPAN 6 – UP STATION)

NOTES:

SEE SHEET 48 FOR SECTION "A–A" AND SECTION "B–B".

SEE SHEET 49 FOR DETAIL "A" AND DETAIL "B".

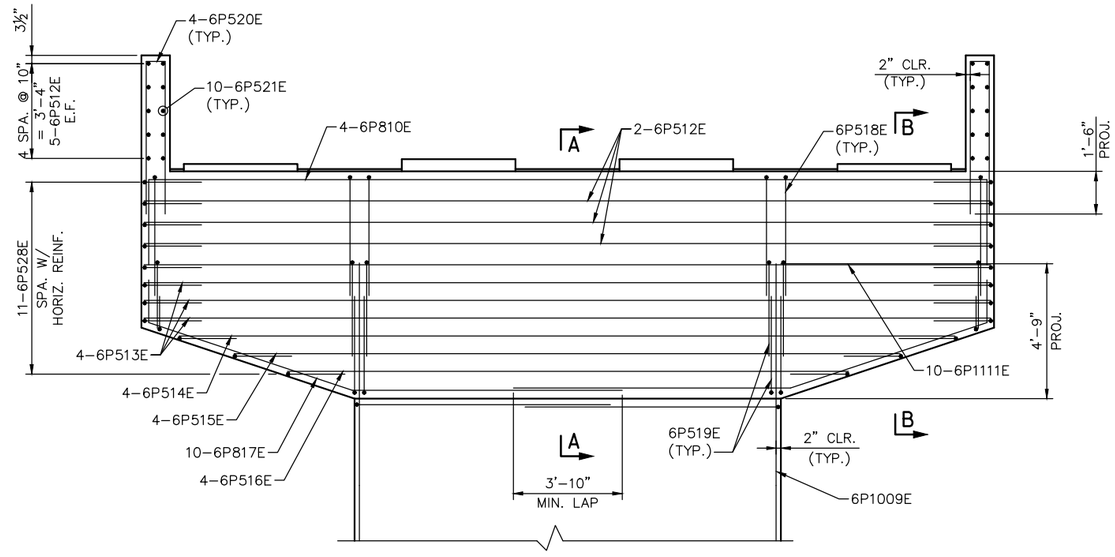

ELEVATION

(LOOKING FROM SPAN 7 – BACK STATION)

NO.	DATE	BY	CHECK	DESIGN	REVISION / SUBMITTAL

DESIGNED BY: DJL CHECKED BY: KJK

DRAWN BY: MSK CHECKED BY: KJK

AECOM Kimley»Horn

90% SUBMISSION - 01/22/16

METROPOLITAN COUNCIL

SOUTHWEST Green Line LRT Extension

CIVIL - VOLUME 4G
5TH AVENUE AND 7TH STREET
BRIDGE 27C18
PIER 6 REINFORCMENT 2

DISCIPLINE: STRUCTURES

SHEET NAME: CBR27C18-BRG-PIR-014-2

SHEET 47 OF 148

Jan, 18 2016 02:41 pm v:\3400_ADC\CAD\SEGMENT E4\PLAN SHEETS\STRUCTURES\27C18\CBR27C18-BRG-PIR-014-1.dwg By: Victor.Madrid

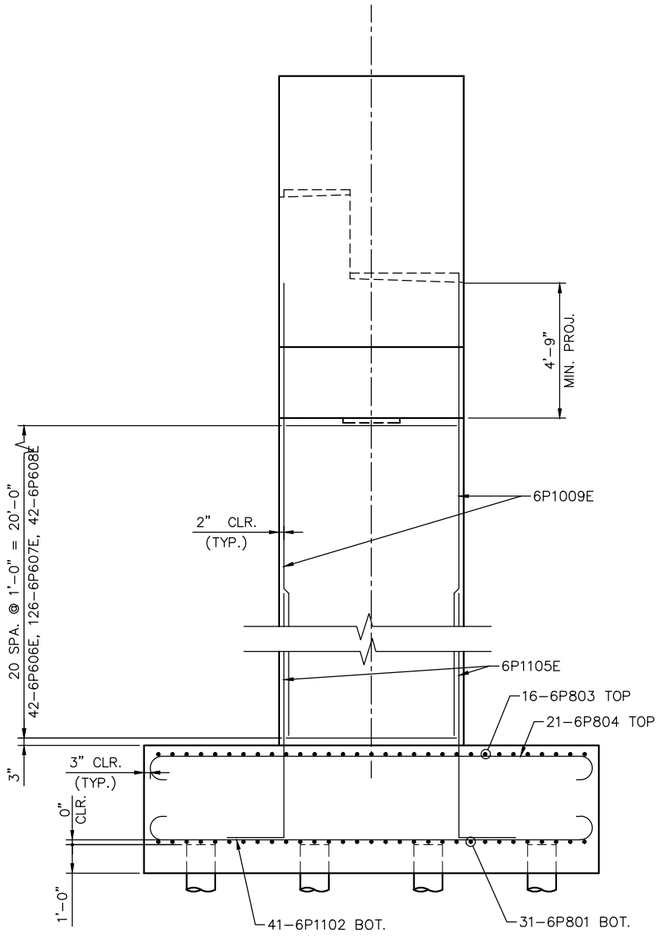

END ELEVATION

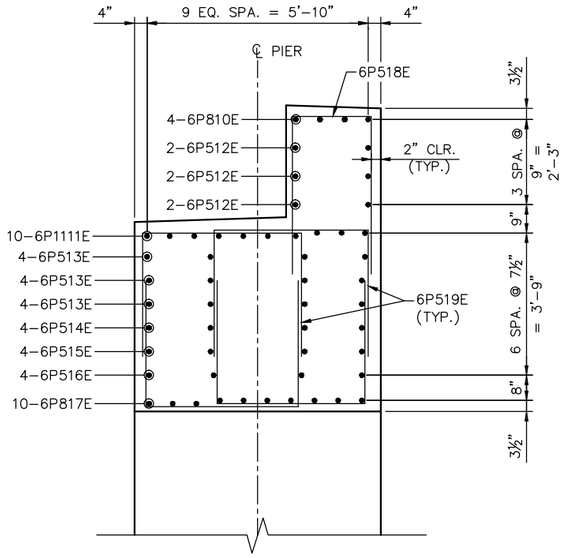

SECTION A-A

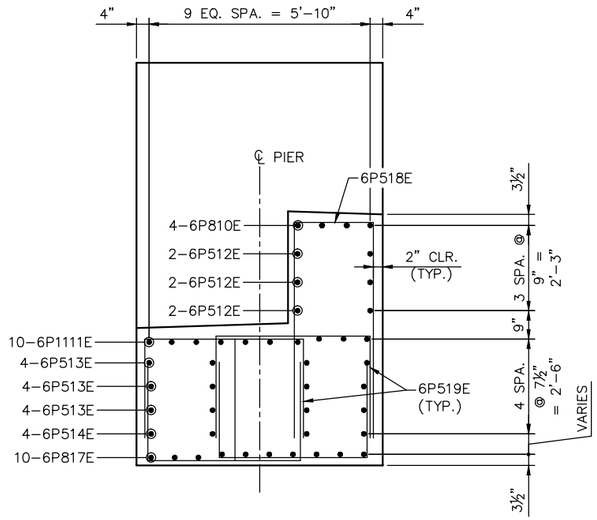

SECTION B-B

NO.	DATE	BY	CHECK	DESIGN	REVISION / SUBMITTAL

DESIGNED BY: DJL CHECKED BY: KJK
DRAWN BY: MSK CHECKED BY: KJK

AECOM Kimley»Horn

90% SUBMISSION - 01/22/16

METROPOLITAN COUNCIL

SOUTHWEST Green Line LRT Extension

CIVIL - VOLUME 4G
5TH AVENUE AND 7TH STREET
BRIDGE 27C18
PIER 6 REINFORCMENT 3

DISCIPLINE: STRUCTURES
SHEET NAME: CBR27C18-BRG-PIR-014-3

SHEET 48 OF 148

Jan, 18 2016 02:41 pm v:\3400_ADC\CAD\SEGMENT E4\PLAN SHEETS\STRUCTURES\27C18\CBR27C18-BRG-PIR-014-1.dwg By: Victor.Madrid

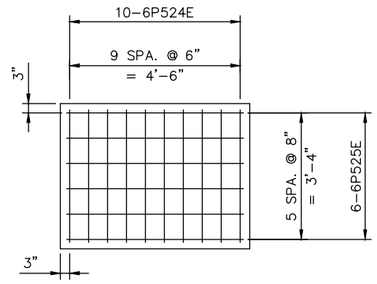

DETAIL A

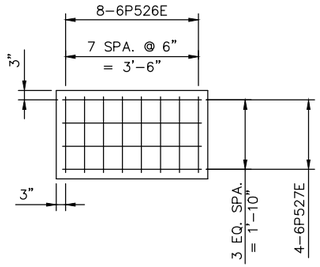

DETAIL B

BILL OF REINFORCEMENT FOR PIER 6

BAR	NO.	LENGTH	SHAPE	LOCATION
6P801	31	'-"	BENT	FOOTING, TRANS. BOT.
6P1102	41	'-"	BENT	FOOTING, LONG. BOT.
6P803	16	'-"	BENT	FOOTING, TRANS. TOP
6P804	21	'-"	BENT	FOOTING, TRANS. BOT.
6P1105E	78	'-"	BENT	COLUMN DOWELS
6P606E	42	'-"	BENT	COLUMN TIE
6P607E	126	'-"	BENT	COLUMN TIE
6P608E	42	'-"	BENT	COLUMN TIE
6P1009E	78	'-"	STR.	COLUMN VERT.
6P810E	4	'-"	BENT	CAP, LONG. TOP.
6P1111E	10	'-"	BENT	CAP, LONG. TOP
6P512E	6	'-"	STR.	CAP, LONG.
6P513E	12	'-"	STR.	CAP, LONG.
6P514E	4	'-"	STR.	CAP, LONG.
6P515E	4	'-"	STR.	CAP, LONG.
6P516E	4	'-"	STR.	CAP, LONG.
6P817E	10	'-"	BENT	CAP, LONG. BOT.
6P518E	45	'-"	BENT	CAP, TOP TIE
6P519E	180	'-"	BENT	CAP STIRRUP
6P520E	8	'-"	BENT	SIDE WALL TIE
6P521E	20	'-"	STR.	SIDE WALL HORIZ.
6P522E	16	'-"	BENT	SHEAR LUG TIE
6P523E	16	'-"	STR.	SHEAR LUB HORIZ.
6P524E	20	'-"	BENT	PEDESTAL TIE
6P525E	12	'-"	BENT	PEDESTAL TIE
6P526E	32	'-"	BENT	PEDESTAL TIE
6P527E	24	'-"	BENT	PEDESTAL TIE
6P528E	33	'-"	BENT	CAP, END TIE

NO.	DATE	BY	CHECK	DESIGN	REVISION / SUBMITTAL

DESIGNED BY: DJL CHECKED BY: KJK
DRAWN BY: MSK CHECKED BY: KJK

AECOM Kimley»Horn

90% SUBMISSION - 01/22/16

METROPOLITAN COUNCIL

SOUTHWEST Green Line LRT Extension

CIVIL - VOLUME 4G
5TH AVENUE AND 7TH STREET
BRIDGE 27C18
PIER 6 REINFORCMENT 4

DISCIPLINE: STRUCTURES
SHEET NAME: CBR27C18-BRG-PIR-014-4

SHEET 49 OF 148

Jan, 18 2016 02:41 pm v:\3400_ADC\CAD\SEGMENT E4\PLAN SHEETS\STRUCTURES\27C18\CBR27C18-BRG-PIR-014-1.dwg By: Victor.Madrid

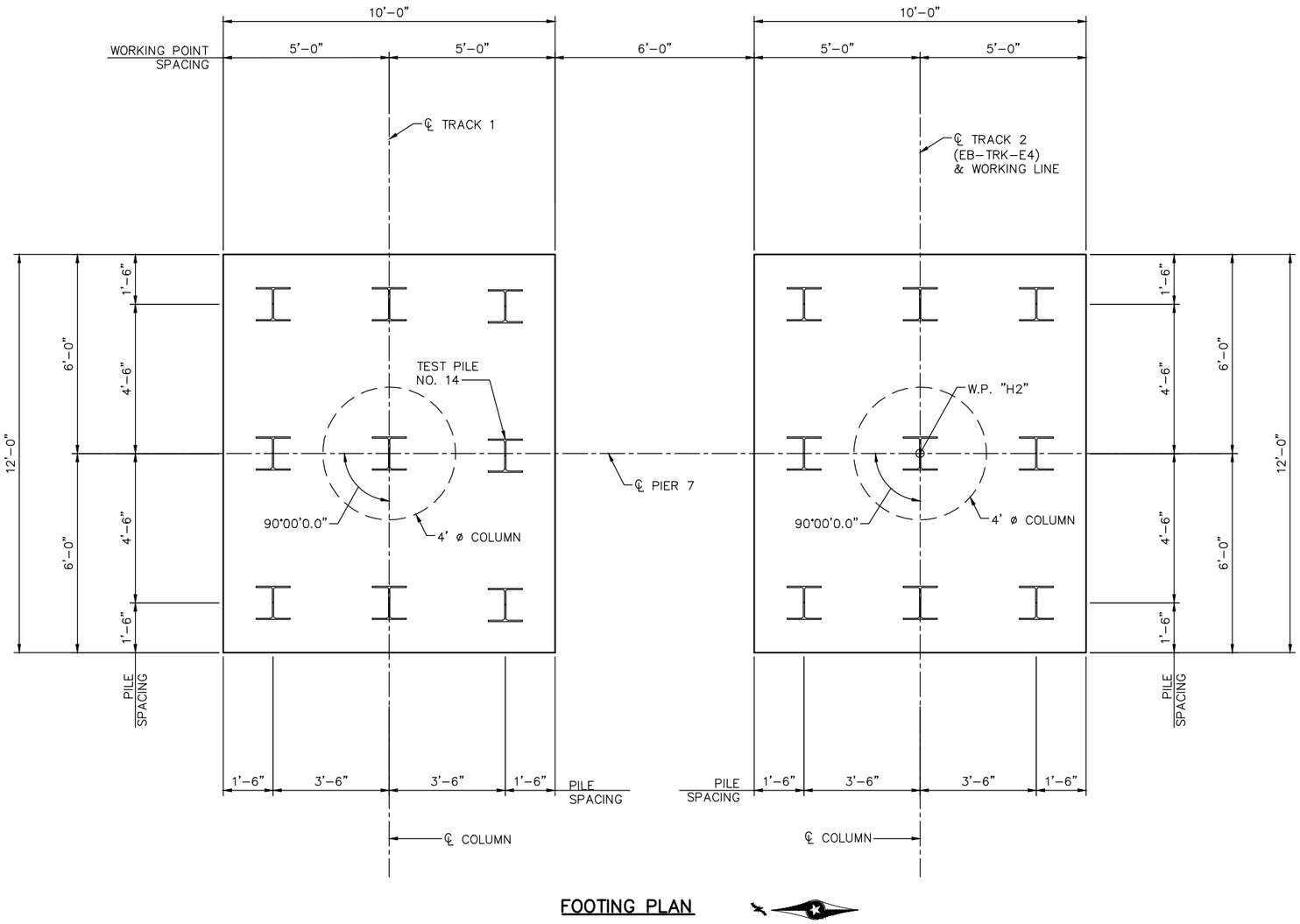

FOOTING PLAN

PIER 7 COMPUTED PILE LOAD - TONS/PILE	
FACTORED DEAD LOAD	44
FACTORED LIVE LOAD	15
FACTORED OVERTURNING	24
* FACTORED DESIGN LOAD	83
* BASED ON STRENGTH V LOAD COMBINATION.	

PIER 7 REQUIRED NOMINAL PILE BEARING RESISTANCE FOR H-PILES Rn - TONS/PILE		
FIELD CONTROL METHOD	φdyn	* Rn
PDA	0.65	128
* Rn = (FACTORED DESIGN LOAD) / φdyn		

GENERAL PILE NOTES

1 STEEL H–TEST PILE 110 FT. LONG
17 STEEL H–PILES EST. LENGTH 100 FT.
18 STELL H–PILES REQ'D FOR PIER 7

NOTES:

PIER PILES TO BE HP 12x53 WITH PILE TIP PROTECTION.

PILE SPACING SHOWN IS AT BOTTOM OF FOOTING.

FOR PILE SPLICE DETAILS, SEE DETAIL B202.

NO.	DATE	BY	CHECK	DESIGN	REVISION / SUBMITTAL

DESIGNED BY: KR CHECKED BY: KJK
DRAWN BY: MSK CHECKED BY: KJK

AECOM Kimley»Horn

90% SUBMISSION - 01/22/16

METROPOLITAN COUNCIL

SOUTHWEST Green Line LRT Extension

CIVIL - VOLUME 4G
5TH AVENUE AND 7TH STREET
BRIDGE 27C18
PIER 7 DETAILS 1

DISCIPLINE: STRUCTURES
SHEET NAME: CBR27C18-BRG-PIR-015

SHEET 50 OF 148

Jan, 19 2016 08:59 am V:\3400_ADC\CAD\SEGMENT E4\PLAN SHEETS\STRUCTURES\27C18\CBR27C18-BRG-PIR-015.dwg By: Victor.Madrid

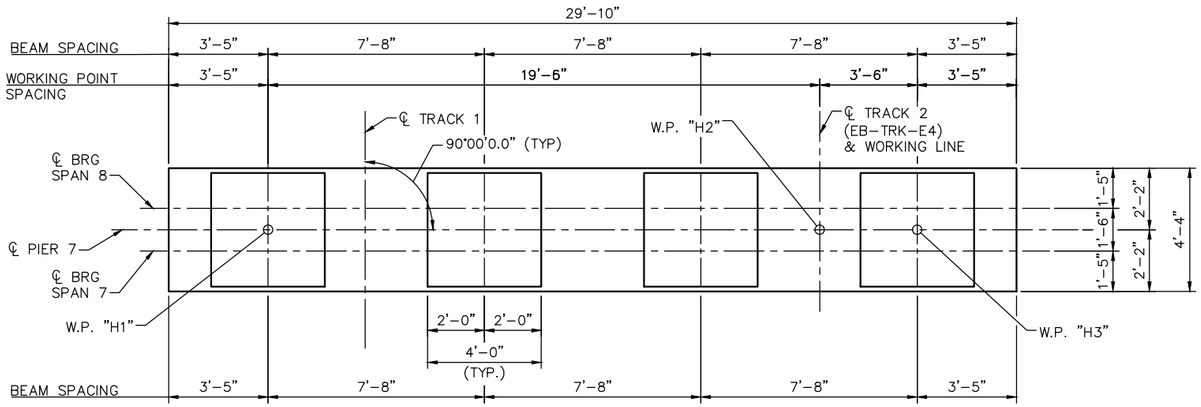

PLAN

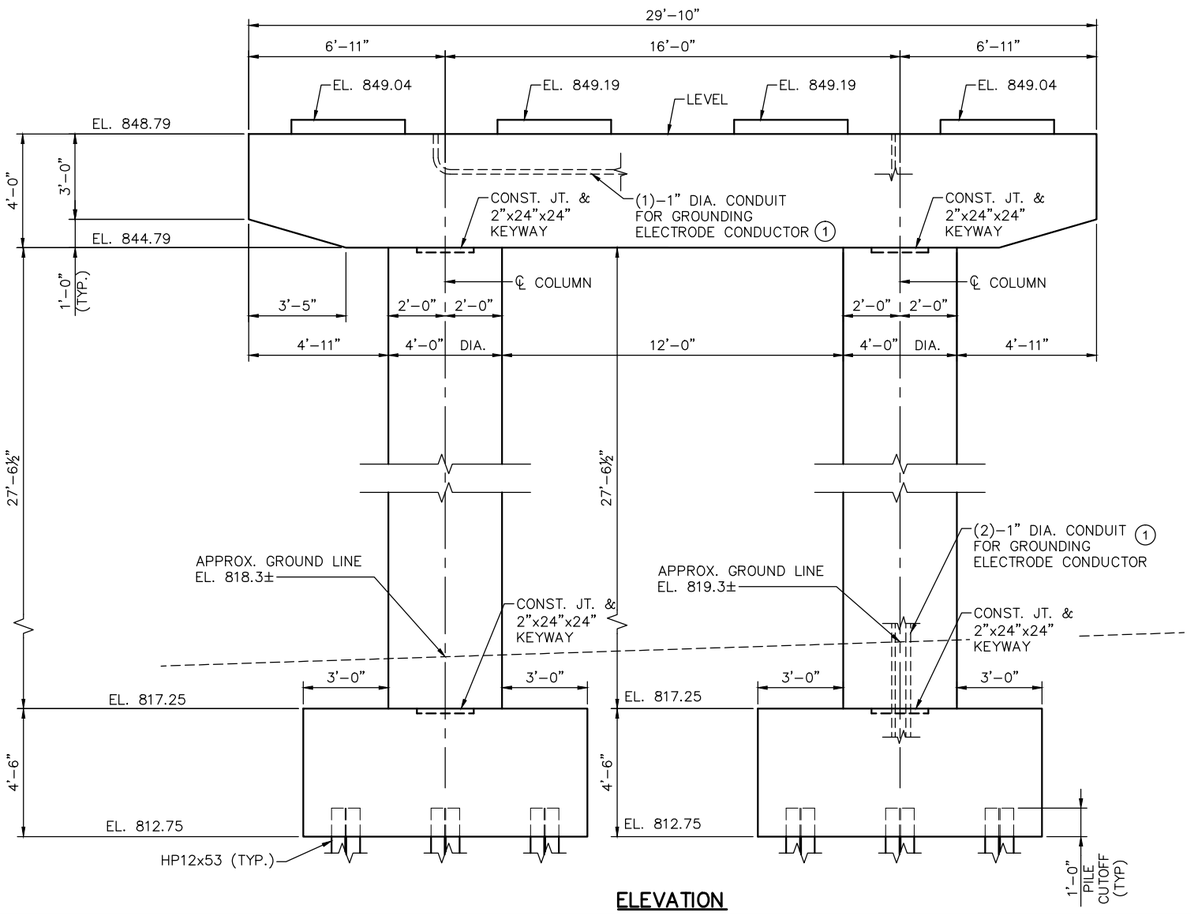

ELEVATION

NOTES:

(1) GROUNDING SYSTEM, SEE SYSTEM WIDE ELECTRICAL FOR DETAILS.

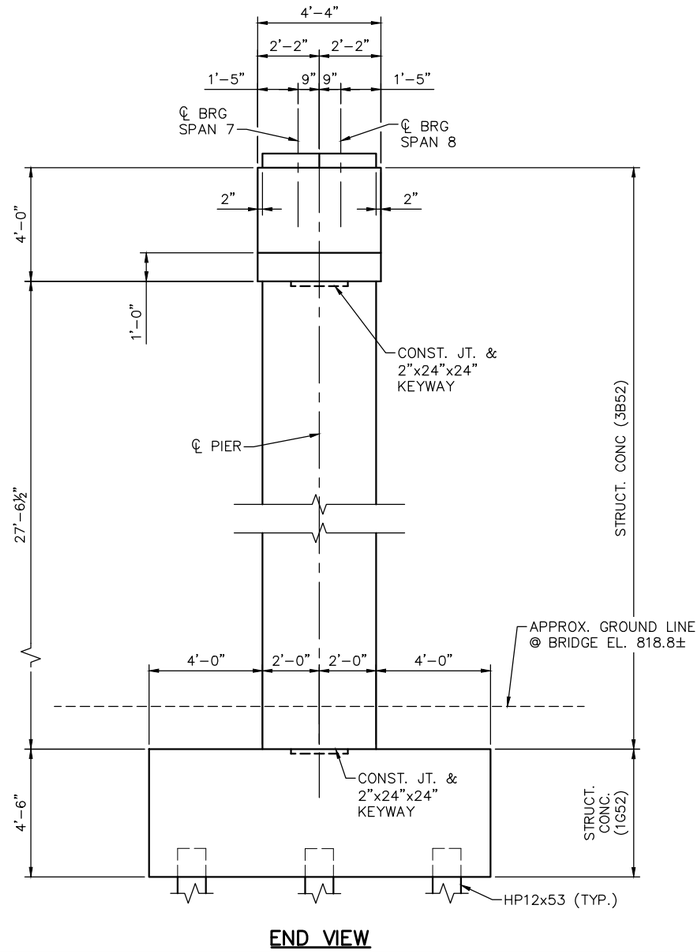

END VIEW

NO.	DATE	BY	CHECK	DESIGN	REVISION / SUBMITTAL

DESIGNED BY: KR | CHECKED BY: KJK
DRAWN BY: MSK | CHECKED BY: KJK

AECOM Kimley»Horn

90% SUBMISSION - 01/22/16

METROPOLITAN COUNCIL

SOUTHWEST Green Line LRT Extension

CIVIL - VOLUME 4G
5TH AVENUE AND 7TH STREET BRIDGE 27C18
PIER 7 DETAILS 2

DISCIPLINE: STRUCTURES

SHEET NAME: CBR27C18-BRG-PIR-016-1

SHEET 51 OF 148

Jan, 18 2016 02:42 pm v:\3400_ADC\CAD\SEGMENT E4\PLAN SHEETS\STRUCTURES\27C18\CBR27C18-BRG-PIR-016.dwg By: Victor.Madrid

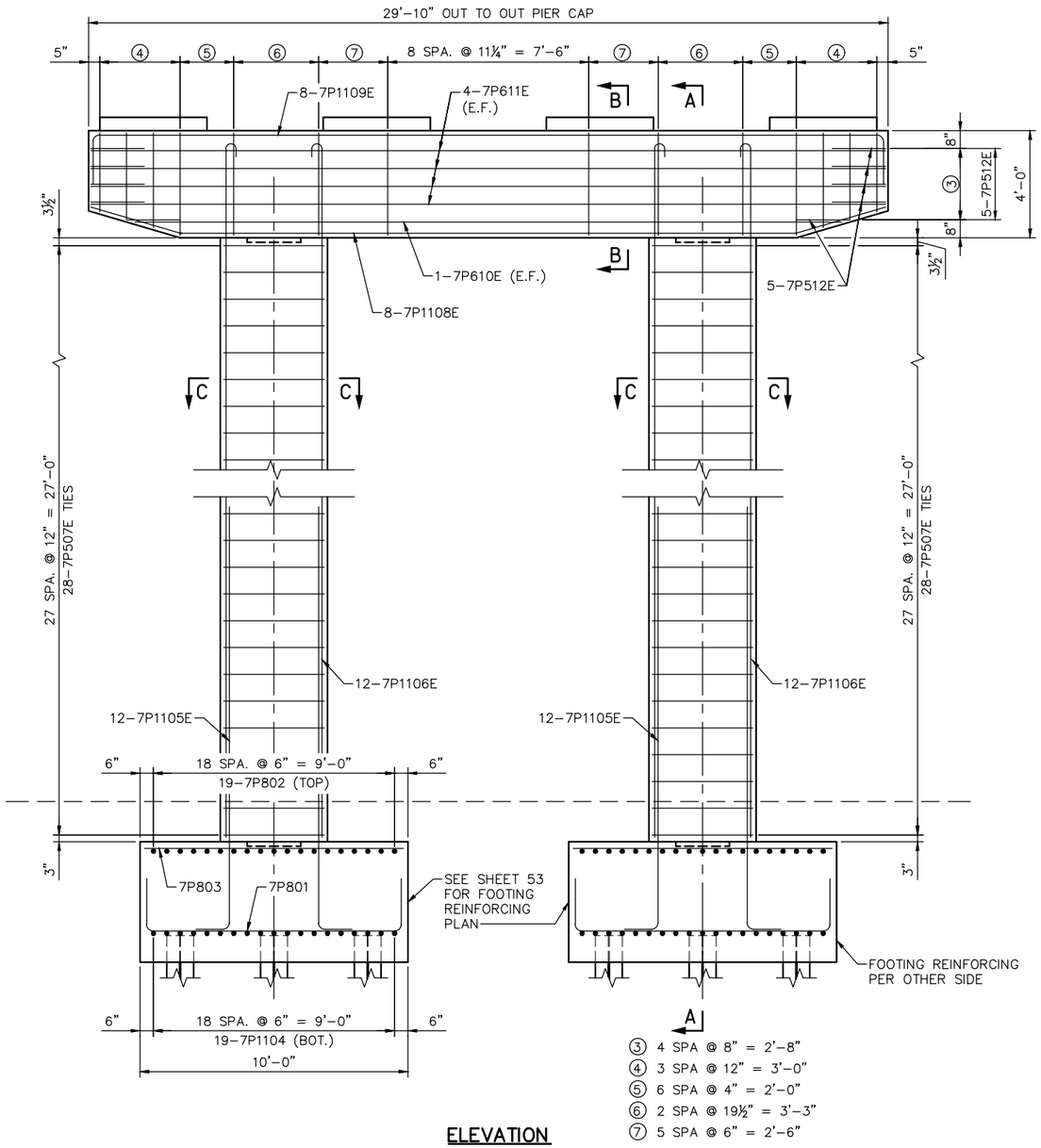

ELEVATION

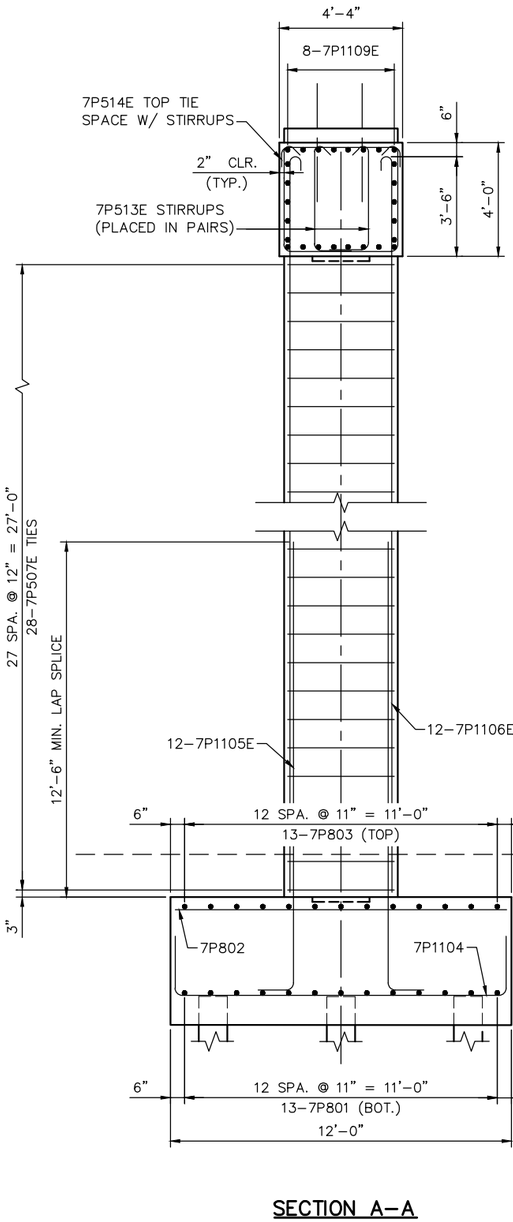

SECTION A–A

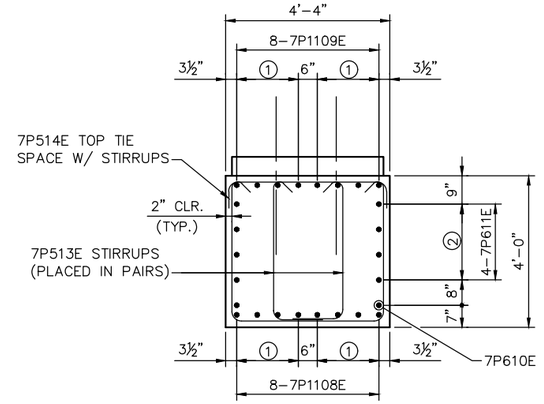

SECTION B–B

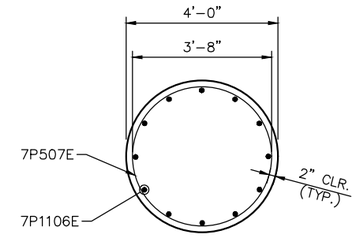

SECTION C–C

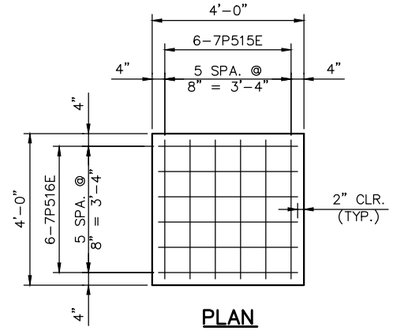

PLAN

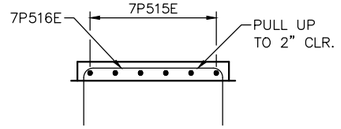

ELEVATION

PEDESTAL REINFORCEMENT

NO.	DATE	BY	CHECK	DESIGN	REVISION / SUBMITTAL

DESIGNED BY: KR | CHECKED BY: KJK
DRAWN BY: MSK | CHECKED BY: KJK

AECOM Kimley»Horn

90% SUBMISSION - 01/22/16

METROPOLITAN COUNCIL

SOUTHWEST Green Line LRT Extension

CIVIL - VOLUME 4G
5TH AVENUE AND 7TH STREET
BRIDGE 27C18
PIER 7 REINFORCEMENT 1

DISCIPLINE: STRUCTURES
SHEET NAME: CBR27C18-BRG-PIR-016-2

SHEET 52 OF 148

Jan, 18 2016 02:42 pm V:\3400_ADC\CAD\SEGMENT E4\PLAN SHEETS\STRUCTURES\27C18\CBR27C18-BRG-PIR-016.dwg By: Victor.Madrid

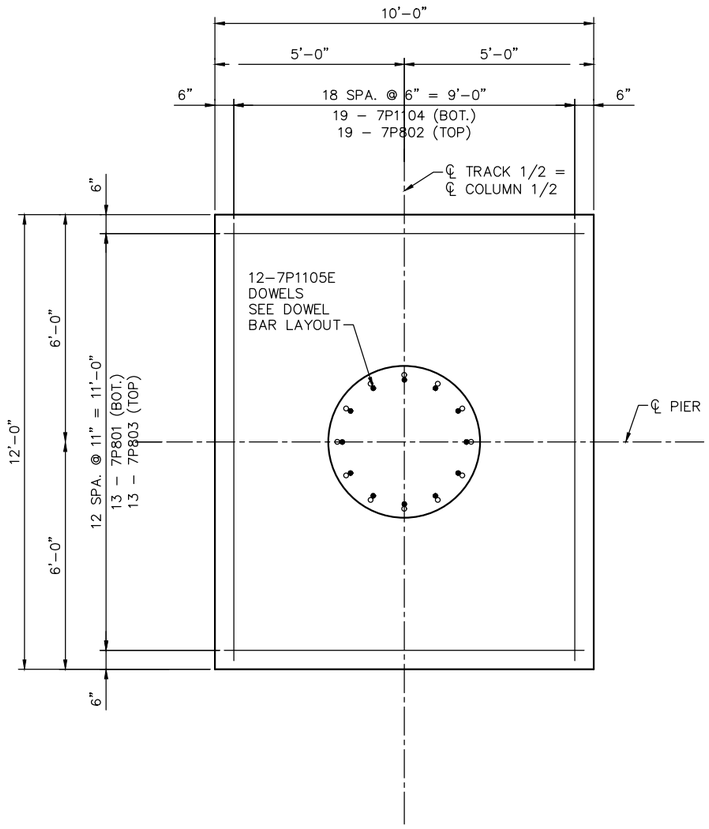

FOOTING PLAN – PIER 7
(BOTH FOOTINGS SAME REINFORCING)

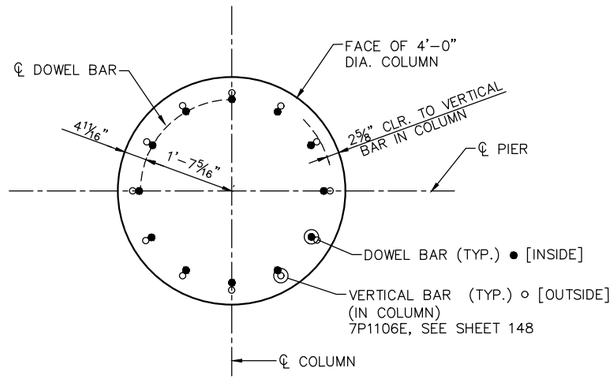

DOWEL BAR LAYOUT

BILL OF REINFORCEMENT FOR PIER 7

BAR	NO.	LENGTH	SHAPE	LOCATION
7P801	26	13'-6"	BENT	FOOTING BOT. TRANS.
7P802	38	15'-6"	BENT	FOOTING TOP LONG.
7P803	26	9'-8"	STR.	FOOTING TOP TRANS.
7P1104	38	11'-8"	STR.	FOOTING BOT. LONG.
7P1105E	24	18'-0"	BENT	COLUMN DOWEL
7P1106E	24	32'-5.5"	BENT	COLUMN VERTICAL
7P507E	56	14'-0"	BENT	COLUMN TIES
7P1108E	8	29'-9"	BENT	BOT. LONG.
7P1109E	8	33'-6"	BENT	TOP. LONG.
7P610E	2	26'-1"	STR.	PIER CAP SIDE BOT.
7P611E	8	29'-6"	STR.	SIDE TYP.
7P512E	10	5'-10"	BENT	PIER CAP SIDE END TIE
7P513E	82	*	BENT	PIER CAP SIDE STIRRUP
7P514E	41	7'-4"	BENT	PIER CAP STIRRUP HAT
7P515E	24	5'-8"	BENT	PEDESTAL TIE
7P516E	24	5'-8"	BENT	PEDESTAL TIE

* 4 SERIES STIRRUPS 11'–3" TO 9'–3"

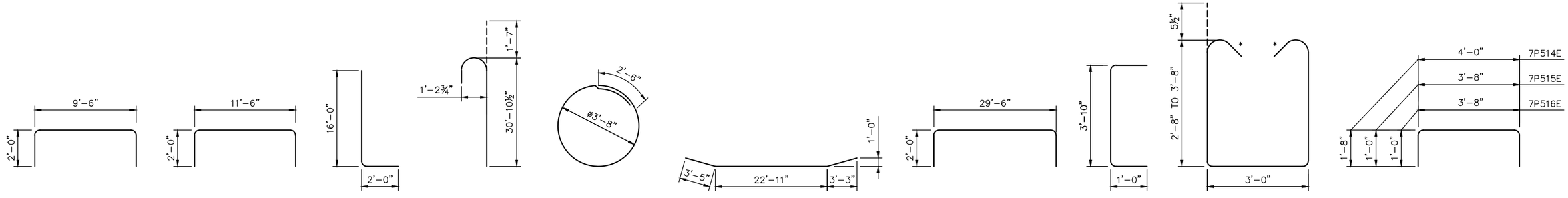

7P801 | 7P1104 | 7P1105E | 7P1106E | 7P507E | 7P1108E | 7P1109E | 7P512E | 7P513E | 7P514E, 7P515E & 7P516E

NO.	DATE	BY	CHECK	DESIGN	REVISION / SUBMITTAL

DESIGNED BY: KR | CHECKED BY: KJK
DRAWN BY: MSK | CHECKED BY: KJK

AECOM Kimley»Horn

90% SUBMISSION - 01/22/16

METROPOLITAN COUNCIL

SOUTHWEST Green Line LRT Extension

CIVIL - VOLUME 4G
5TH AVENUE AND 7TH STREET
BRIDGE 27C18
PIER 7 REINFORCEMENT 2

DISCIPLINE: STRUCTURES
SHEET NAME: CBR27C18-BRG-PIR-016-3

SHEET 53 OF 148

Jan. 18 2016 02:42 pm V:\3400_ADC\CAD\SEGMENT E4\PLAN SHEETS\STRUCTURES\27C18\CBR27C18-BRG-PIR-016.dwg By: Victor.Madrid

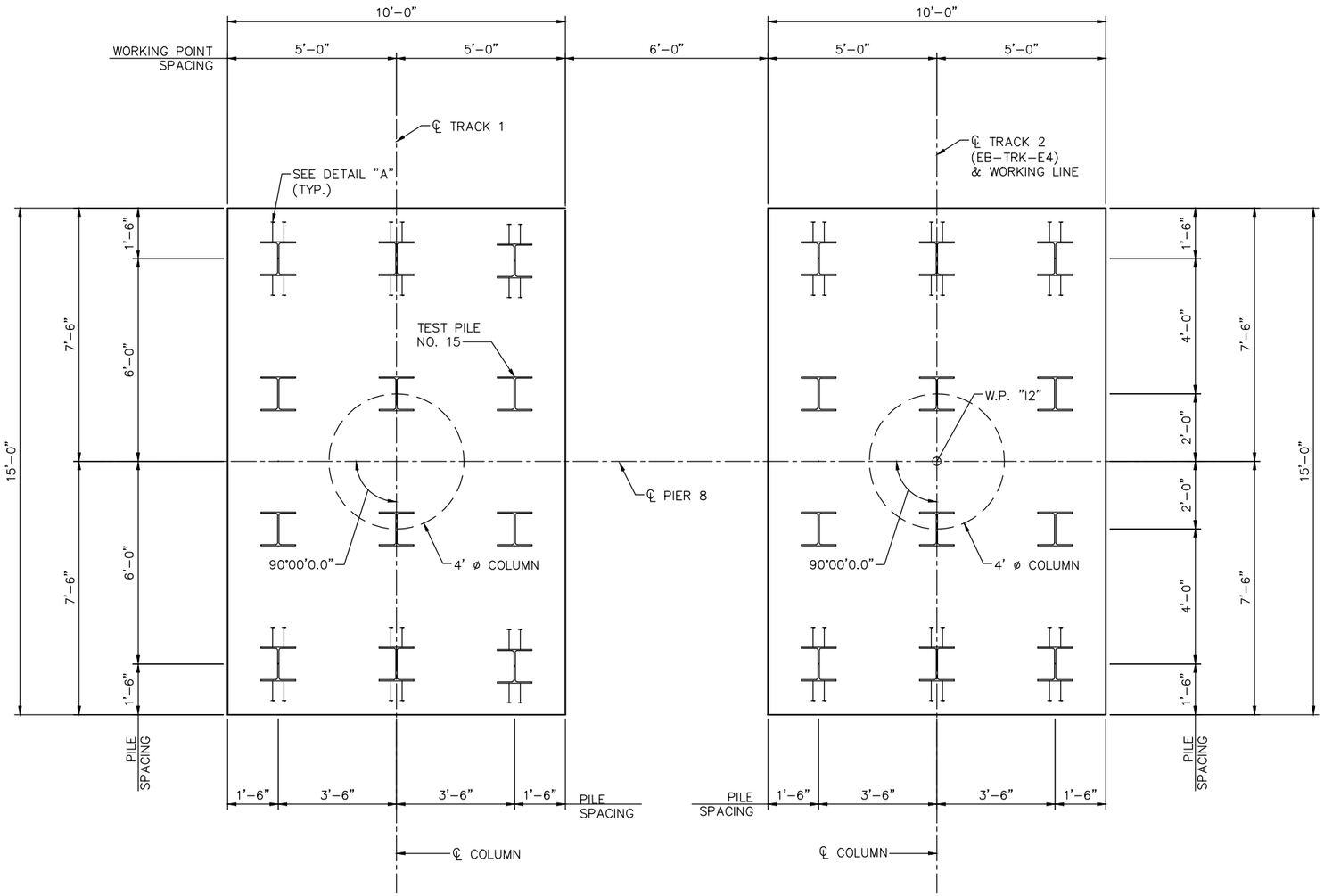

FOOTING PLAN

PIER 8 COMPUTED PILE LOAD - TONS/PILE	
FACTORED DEAD LOAD	36
FACTORED LIVE LOAD	14
FACTORED OVERTURNING	34
* FACTORED DESIGN LOAD	84
* BASED ON STRENGTH V LOAD COMBINATION.	

PIER 8 REQUIRED NOMINAL PILE BEARING RESISTANCE FOR H-PILES Rn - TONS/PILE		
FIELD CONTROL METHOD	φdyn	* Rn
PDA	0.65	130
* Rn = (FACTORED DESIGN LOAD) / φdyn		

GENERAL PILE NOTES

1 STEEL H-TEST PILE 130 FT. LONG
23 STEEL H-PILES EST. LENGTH 120 FT.
24 STELL H-PILES REQ'D FOR PIER 8

NOTES:

PIER PILES TO BE HP 12x53 WITH PILE TIP PROTECTION.

PILE SPACING SHOWN IS AT BOTTOM OF FOOTING.

FOR PILE SPLICE DETAILS, SEE DETAIL B202.

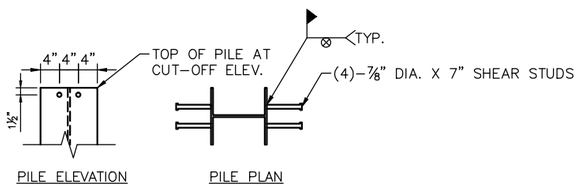

DETAIL "A"

NO.	DATE	BY	CHECK	DESIGN	REVISION / SUBMITTAL

DESIGNED BY: KR CHECKED BY: KJK
DRAWN BY: MSK CHECKED BY: KJK

AECOM Kimley»Horn

90% SUBMISSION - 01/22/16

METROPOLITAN COUNCIL

SOUTHWEST Green Line LRT Extension

CIVIL - VOLUME 4G
5TH AVENUE AND 7TH STREET
BRIDGE 27C18
PIER 8 DETAILS 1

DISCIPLINE: STRUCTURES
SHEET NAME: CBR27C18-BRG-PIR-017

SHEET 54 OF 148

Jan, 19 2016 09:00 am V:\3400_ADC\CAD\SEGMENT E4\PLAN SHEETS\STRUCTURES\27C18\CBR27C18-BRG-PIR-017.dwg By: Victor.Madrid

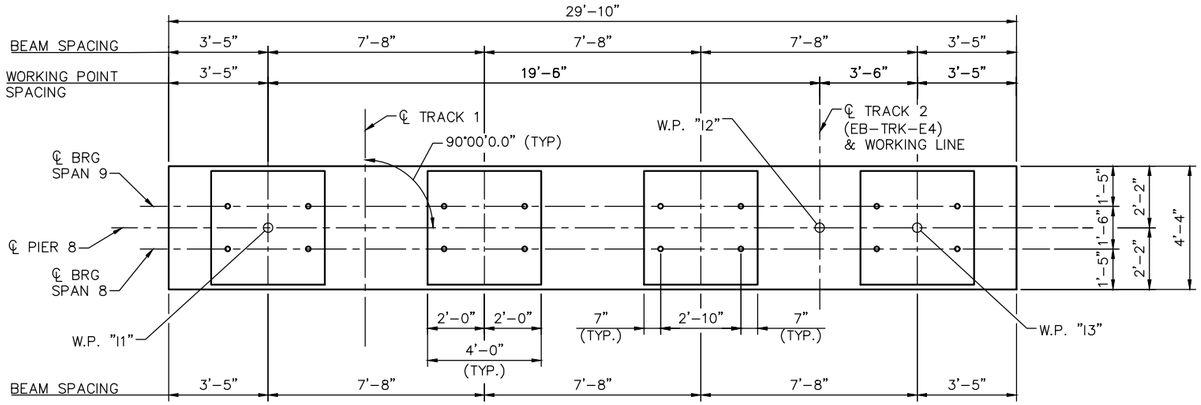

PLAN

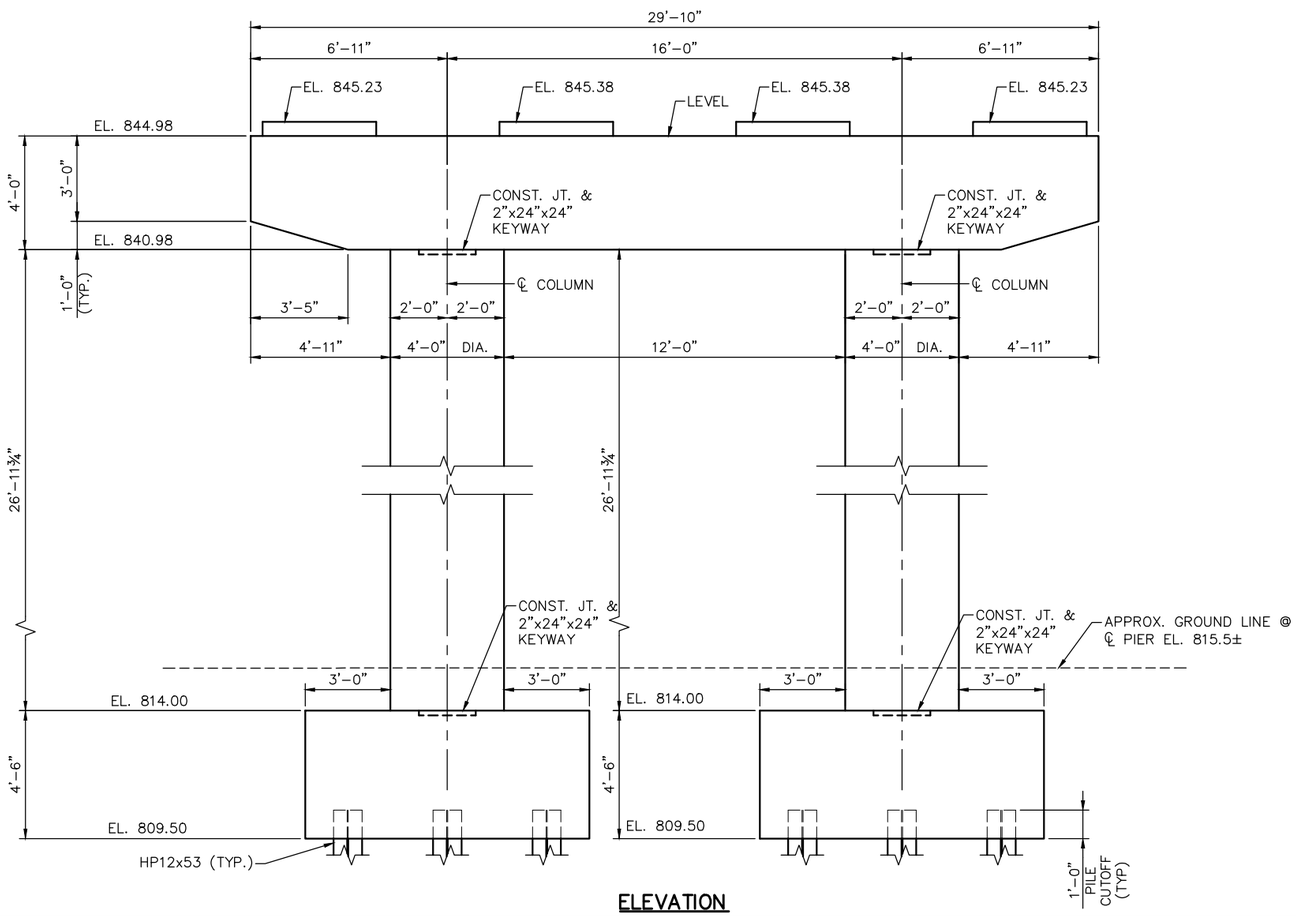

ELEVATION

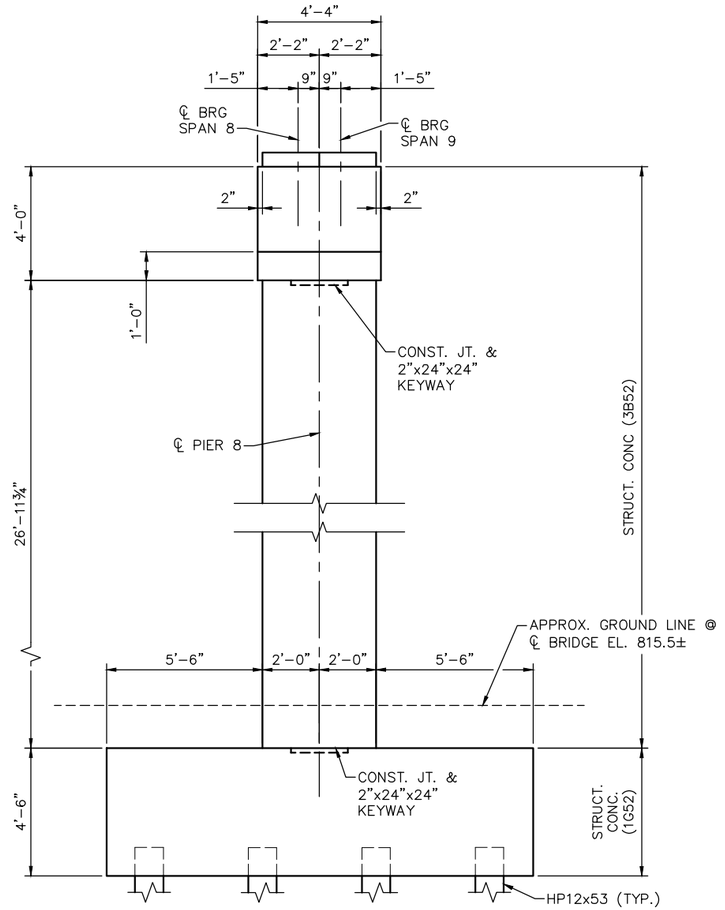

END VIEW

NO.	DATE	BY	CHECK	DESIGN	REVISION / SUBMITTAL

DESIGNED BY: KR | CHECKED BY: KJK
DRAWN BY: MSK | CHECKED BY: KJK

AECOM Kimley»Horn

90% SUBMISSION - 01/22/16

METROPOLITAN COUNCIL

SOUTHWEST Green Line LRT Extension

CIVIL - VOLUME 4G
5TH AVENUE AND 7TH STREET BRIDGE 27C18
PIER 8 DETAILS 2

DISCIPLINE: STRUCTURES

SHEET NAME: CBR27C18-BRG-PIR-018-1

SHEET 55 OF 148

Jan, 18 2016 02:44 pm v:\3400_ADC\CAD\SEGMENT E4\PLAN SHEETS\STRUCTURES\27C18\CBR27C18-BRG-PIR-018.dwg By: Victor.Madrid

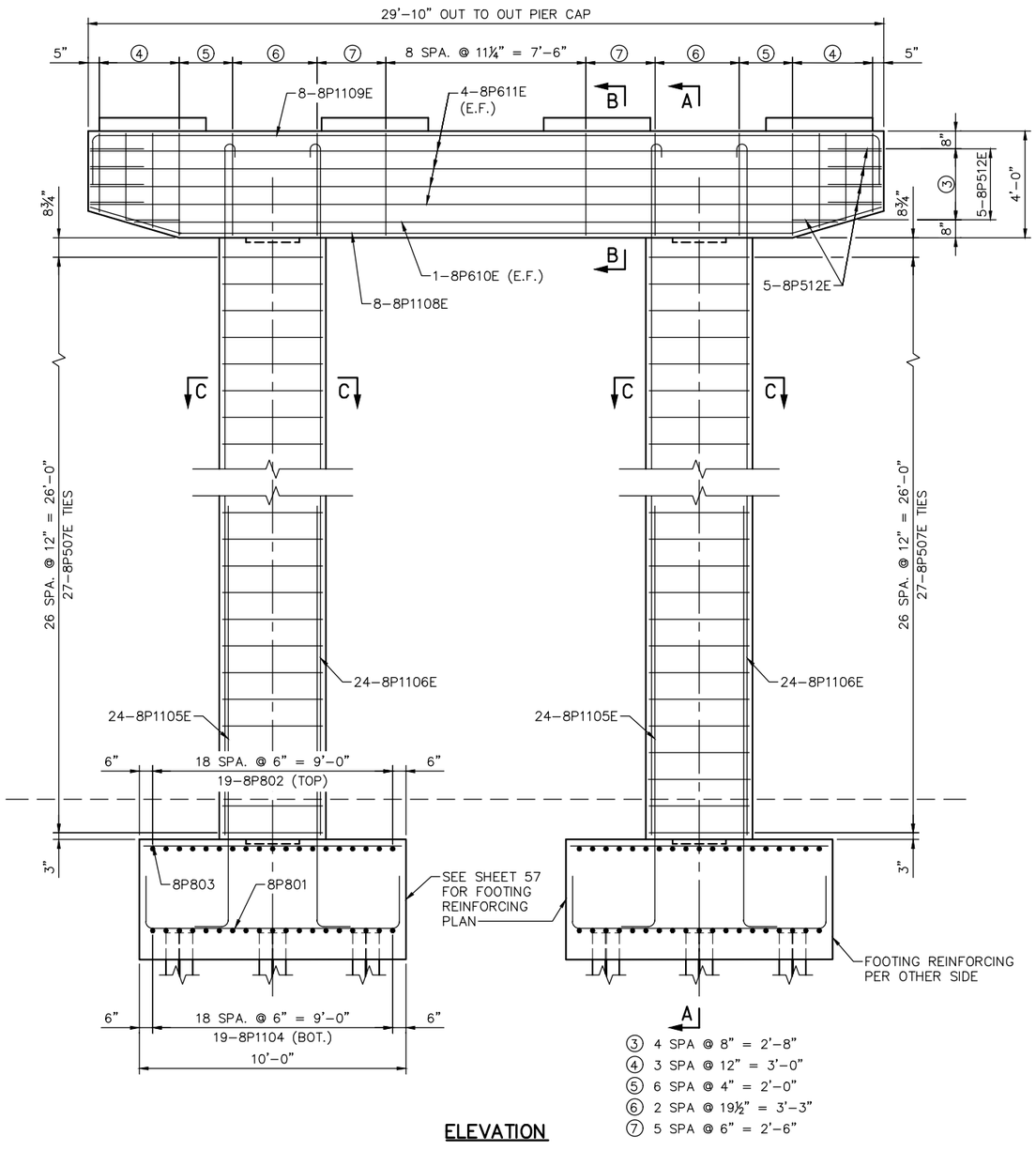

ELEVATION

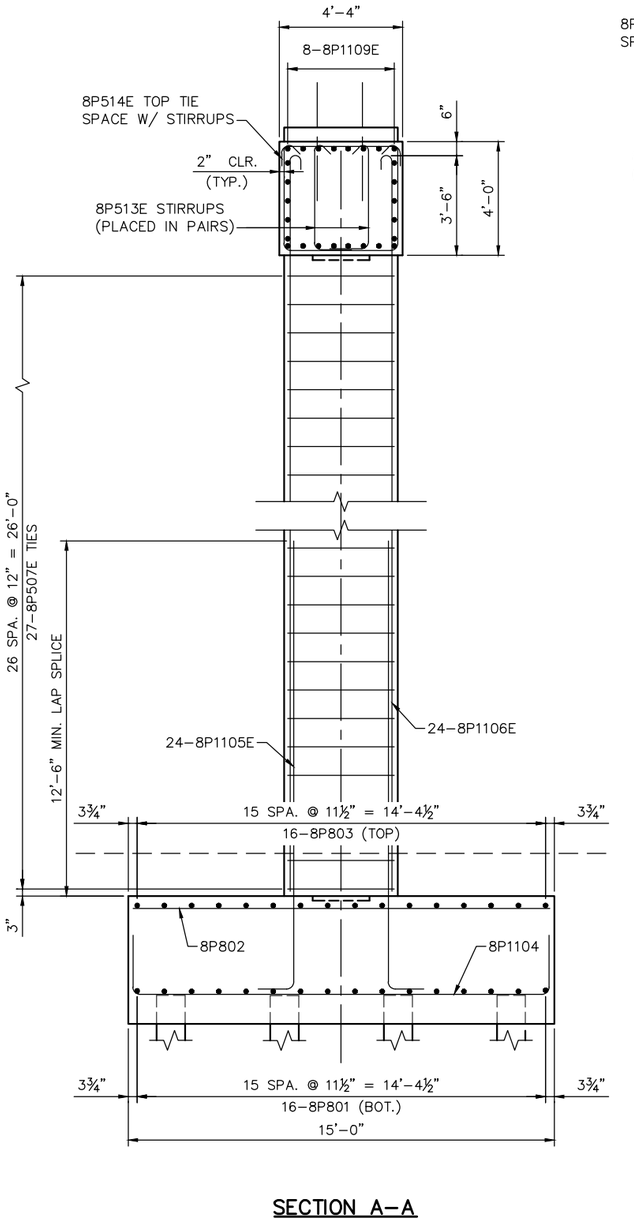

SECTION A–A

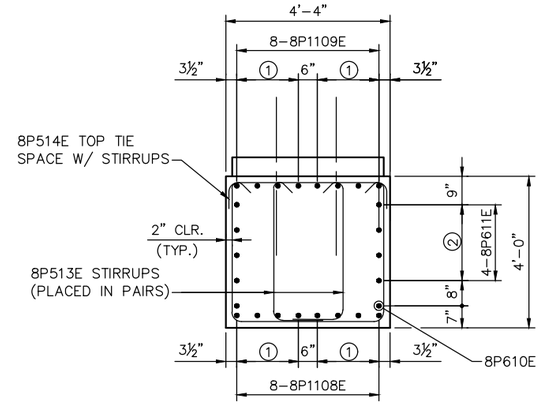

SECTION B–B

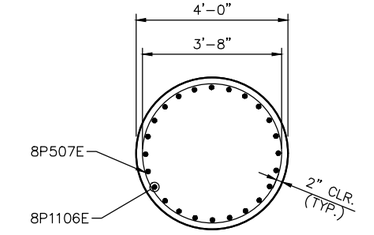

SECTION C–C

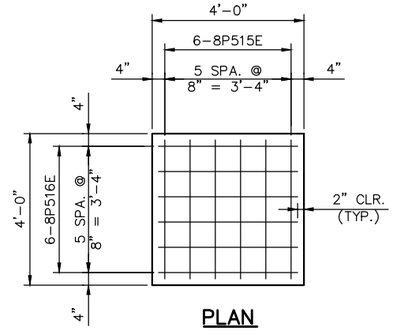

PLAN

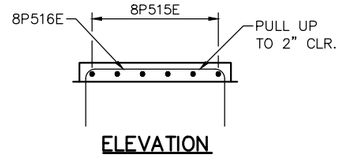

ELEVATION

PEDESTAL REINFORCEMENT

NO.	DATE	BY	CHECK	DESIGN	REVISION / SUBMITTAL

DESIGNED BY: KR CHECKED BY: KJK
DRAWN BY: MSK CHECKED BY: KJK

AECOM Kimley»Horn

90% SUBMISSION - 01/22/16

METROPOLITAN COUNCIL

SOUTHWEST Green Line LRT Extension

CIVIL - VOLUME 4G
5TH AVENUE AND 7TH STREET
BRIDGE 27C18
PIER 8 REINFORCEMENT 1

DISCIPLINE: STRUCTURES
SHEET NAME: CBR27C18-BRG-PIR-018-2

SHEET 56 OF 148

Jan, 18 2016 02:44 pm V:\3400_ADC\CAD\SEGMENT E4\PLAN SHEETS\STRUCTURES\27C18\CBR27C18-BRG-PIR-018.dwg By: Victor.Madrid

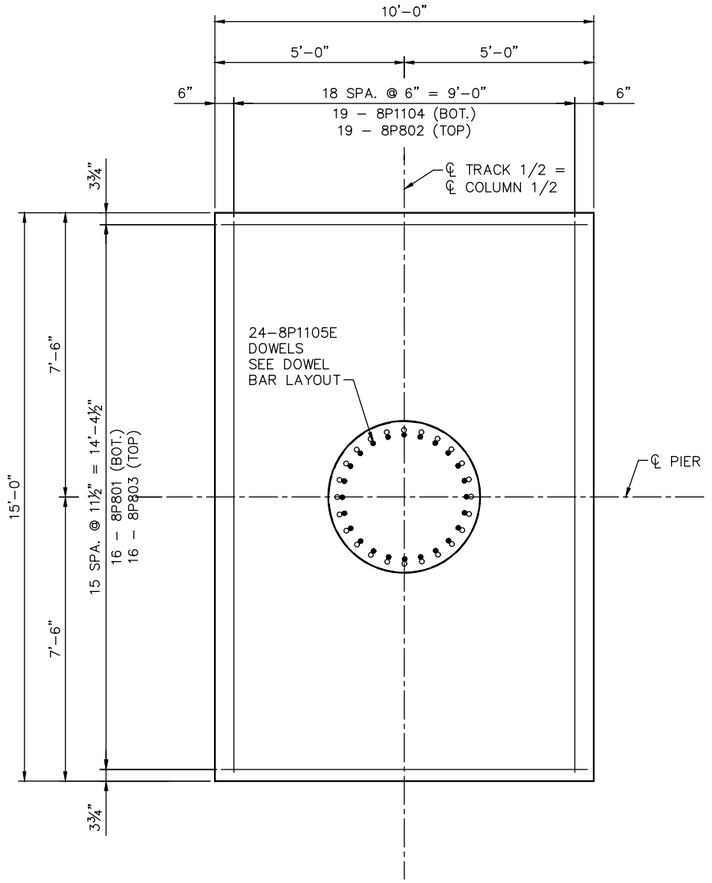

FOOTING PLAN – PIER 8
(BOTH FOOTINGS SAME REINFORCING)

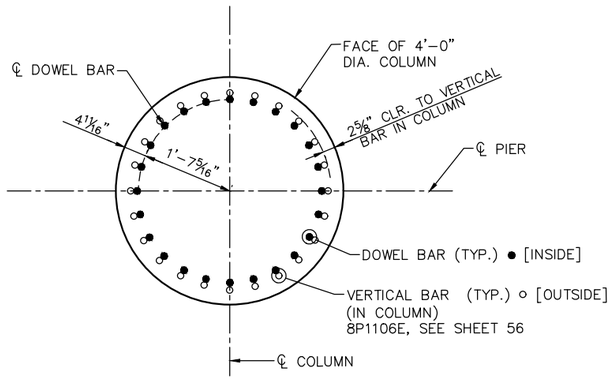

DOWEL BAR LAYOUT

BILL OF REINFORCEMENT FOR PIER 8

BAR	NO.	LENGTH	SHAPE	LOCATION
8P801	32	13'-6"	BENT	FOOTING BOT. TRANS.
8P802	38	14'-6"	STR.	FOOTING TOP LONG.
8P803	32	9'-6"	STR.	FOOTING TOP TRANS.
8P1104	38	18'-6"	BENT	FOOTING BOT. LONG.
8P1105E	48	18'-0"	BENT	COLUMN DOWEL
8P1106E	48	31'-11"	BENT	COLUMN VERTICAL
8P507E	54	14'-0"	BENT	COLUMN TIES
8P1108E	8	29'-9"	BENT	BOT. LONG.
8P1109E	8	33'-6"	BENT	TOP. LONG.
8P610E	2	26'-1"	STR.	PIER CAP SIDE BOT.
8P611E	8	29'-6"	STR.	SIDE TYP.
8P512E	10	5'-10"	BENT	PIER CAP SIDE END TIE
8P513E	82	*	BENT	PIER CAP SIDE STIRRUP
8P514E	41	7'-4"	BENT	PIER CAP STIRRUP HAT
8P515E	24	5'-8"	BENT	PEDESTAL TIE
8P516E	24	5'-8"	BENT	PEDESTAL TIE

* 4 SERIES STIRRUPS 11'–3" TO 9'–3"

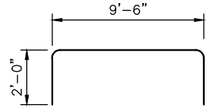

8P801

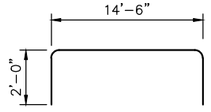

8P1104

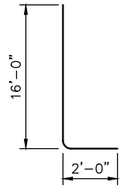

8P1105E

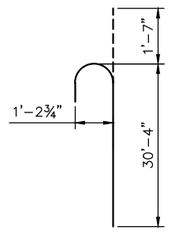

8P1106E

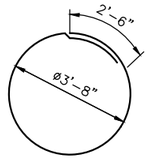

8P507E

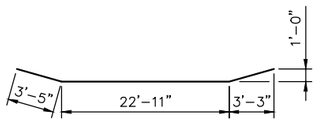

8P1108E

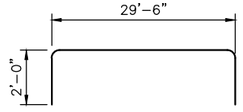

8P1109E

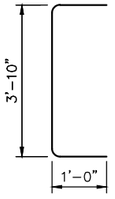

8P512E

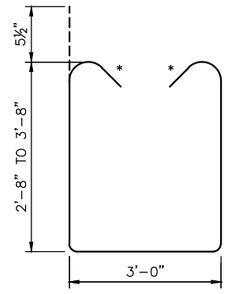

8P513E

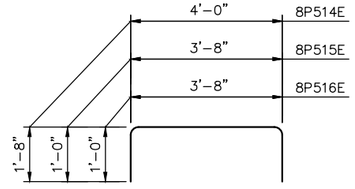

8P514E, 8P515E & 8P516E

NO.	DATE	BY	CHECK	DESIGN	REVISION / SUBMITTAL

DESIGNED BY: KR | CHECKED BY: KJK
DRAWN BY: MSK | CHECKED BY: KJK

AECOM Kimley»Horn

90% SUBMISSION - 01/22/16

METROPOLITAN COUNCIL

SOUTHWEST Green Line LRT Extension

CIVIL - VOLUME 4G
5TH AVENUE AND 7TH STREET
BRIDGE 27C18
PIER 8 REINFORCEMENT 2

DISCIPLINE: STRUCTURES
SHEET NAME: CBR27C18-BRG-PIR-018-3

SHEET 57 OF 148

Jan. 18 2016 02:44 pm V:\3400_ADC\CAD\SEGMENT E4\PLAN SHEETS\STRUCTURES\27C18\CBR27C18-BRG-PIR-018.dwg By: Victor.Madrid

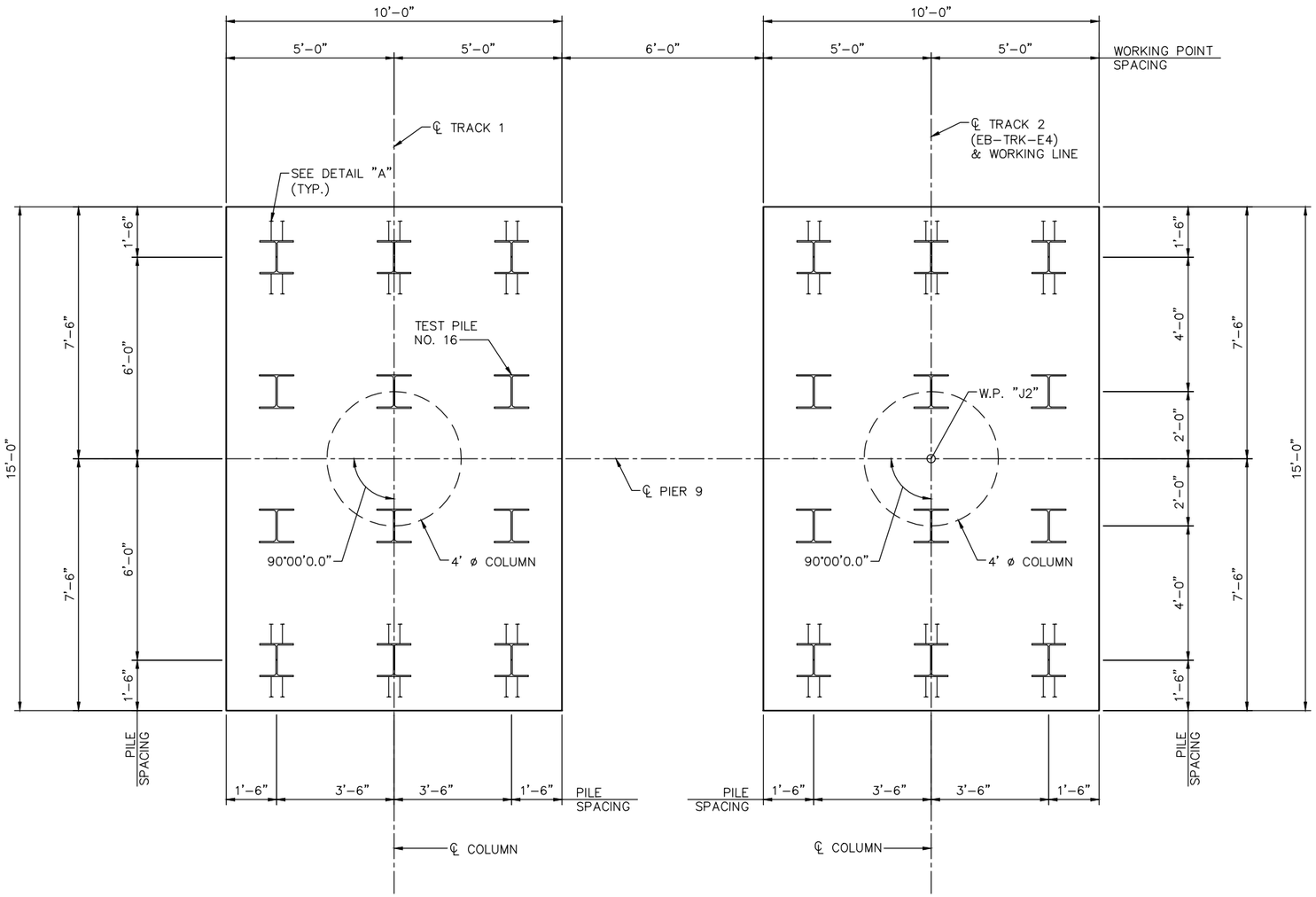

FOOTING PLAN

PIER 9 COMPUTED PILE LOAD - TONS/PILE	
FACTORED DEAD LOAD	36
FACTORED LIVE LOAD	14
FACTORED OVERTURNING	34
* FACTORED DESIGN LOAD	84
* BASED ON STRENGTH V LOAD COMBINATION.	

PIER 9 REQUIRED NOMINAL PILE BEARING RESISTANCE FOR H-PILES Rn - TONS/PILE		
FIELD CONTROL METHOD	φdyn	* Rn
PDA	0.65	130
* Rn = (FACTORED DESIGN LOAD) / φdyn		

GENERAL PILE NOTES

1 STEEL H–TEST PILE 140 FT. LONG
23 STEEL H–PILES EST. LENGTH 130 FT
24 STEEL H–PILES REQ'D FOR PIER 9

PIER PILES TO BE HP 12x53 WITH PILE TIP PROTECTION.

PILE SPACING SHOWN IS AT BOTTOM OF FOOTING

FOR PILE SPLICE DETAILS, SEE DETAIL B202.

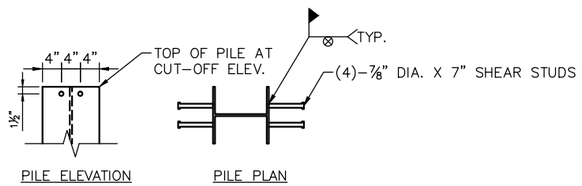

DETAIL "A"

NO.	DATE	BY	CHECK	DESIGN	REVISION / SUBMITTAL

DESIGNED BY: KR CHECKED BY: KJK
DRAWN BY: MSK CHECKED BY: KJK

AECOM Kimley»Horn

90% SUBMISSION - 01/22/16

METROPOLITAN COUNCIL

SOUTHWEST Green Line LRT Extension

CIVIL - VOLUME 4G
5TH AVENUE AND 7TH STREET
BRIDGE 27C18
PIER 9 DETAILS 1

DISCIPLINE: STRUCTURES
SHEET NAME: CBR27C18-BRG-PIR-019

SHEET 58 OF 148

Jan. 19 2016 09:01 am V:\3400_ADC\CAD\SEGMENT E4\PLAN SHEETS\STRUCTURES\27C18\CBR27C18-BRG-PIR-019.dwg By: Victor.Madrid

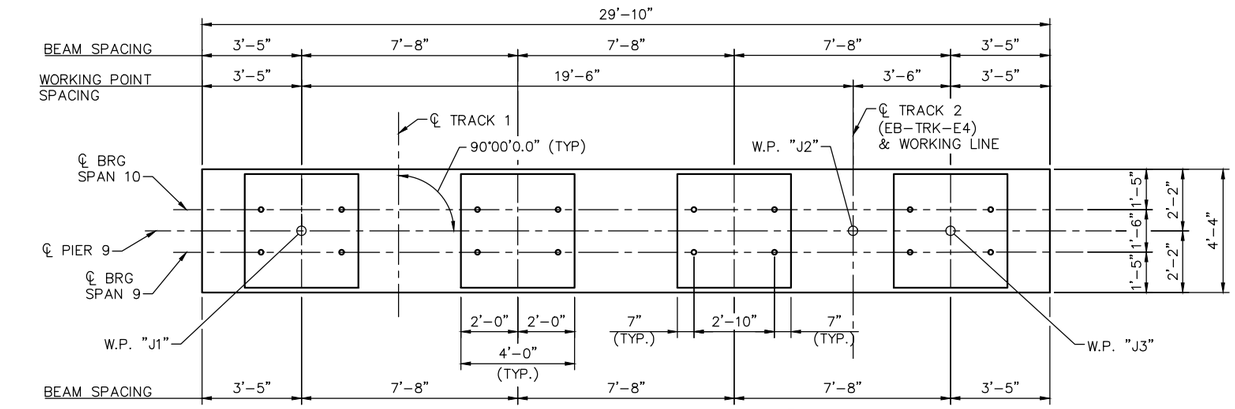

PLAN

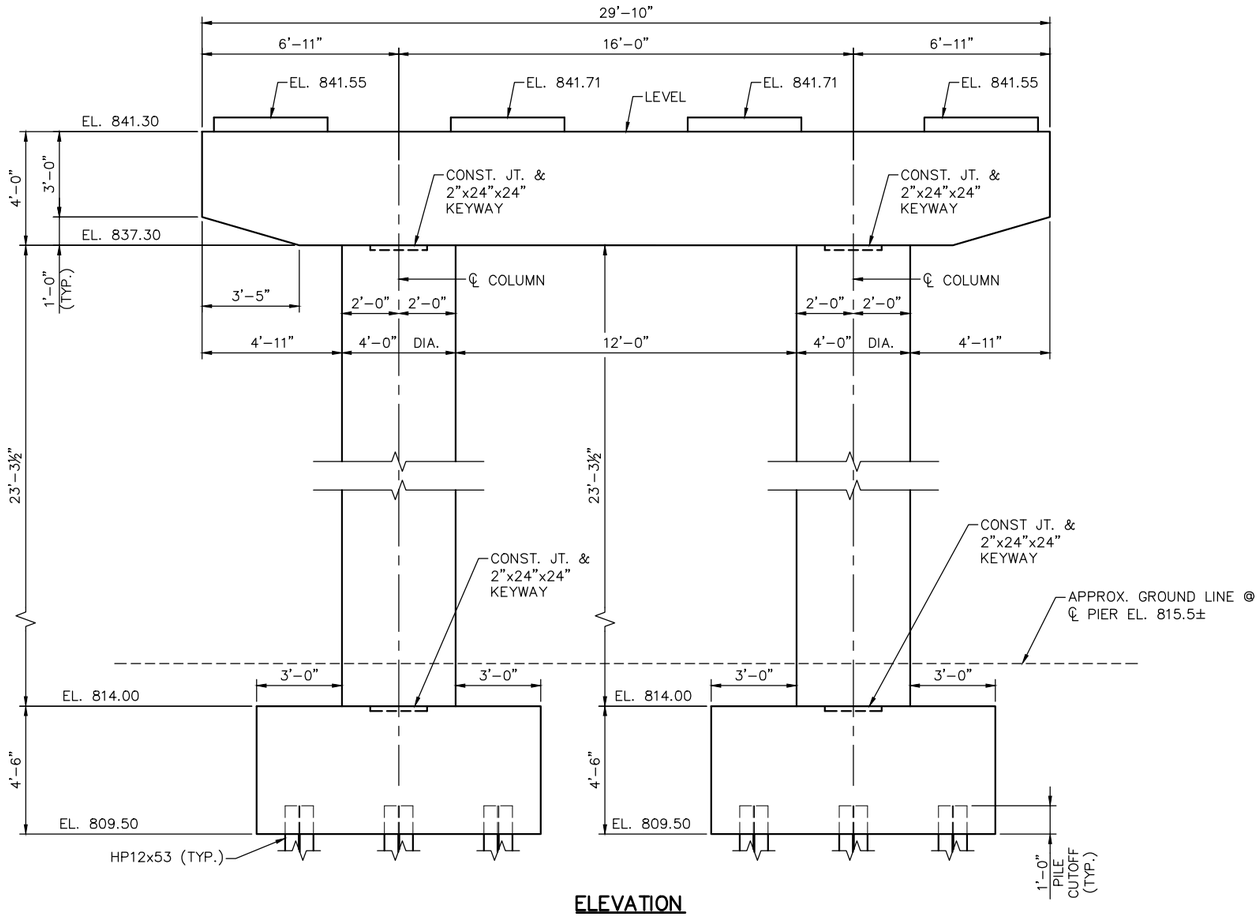

ELEVATION

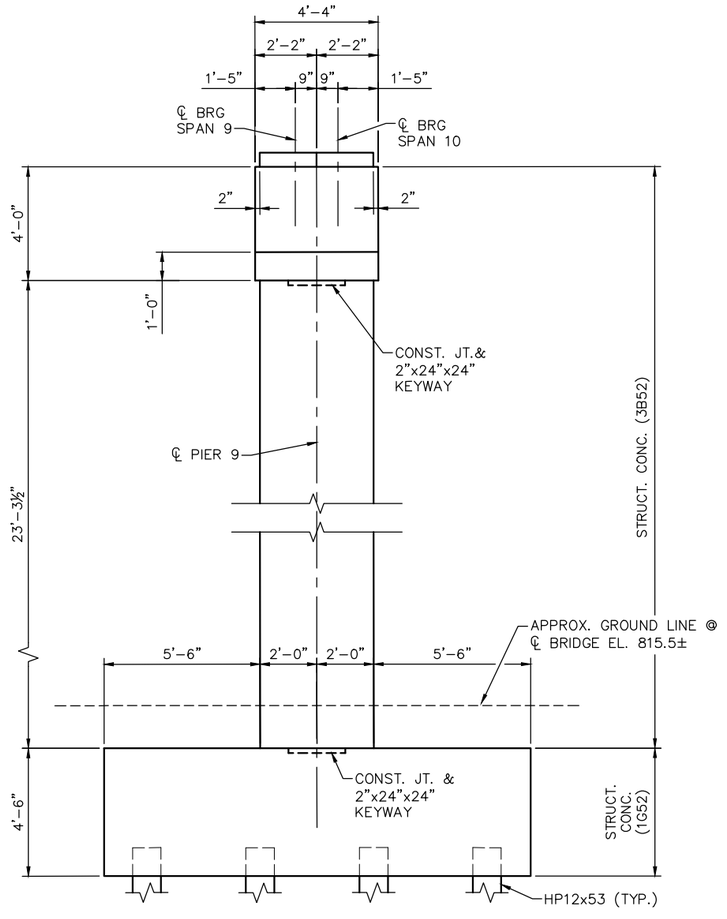

END VIEW

NO.	DATE	BY	CHECK	DESIGN	REVISION / SUBMITTAL

DESIGNED BY: KR | CHECKED BY: KJK
DRAWN BY: MSK | CHECKED BY: KJK

AECOM Kimley»Horn

90% SUBMISSION - 01/22/16

METROPOLITAN COUNCIL

SOUTHWEST Green Line LRT Extension

CIVIL - VOLUME 4G
5TH AVENUE AND 7TH STREET BRIDGE 27C18
PIER 9 DETAILS 2

DISCIPLINE: STRUCTURES

SHEET NAME: CBR27C18-BRG-PIR-020-1

SHEET 59 OF 148

Jan, 18 2016 02:45 pm v:\3400_ADC\CAD\SEGMENT E4\PLAN SHEETS\STRUCTURES\27C18\CBR27C18-BRG-PIR-020.dwg By: Victor.Madrid

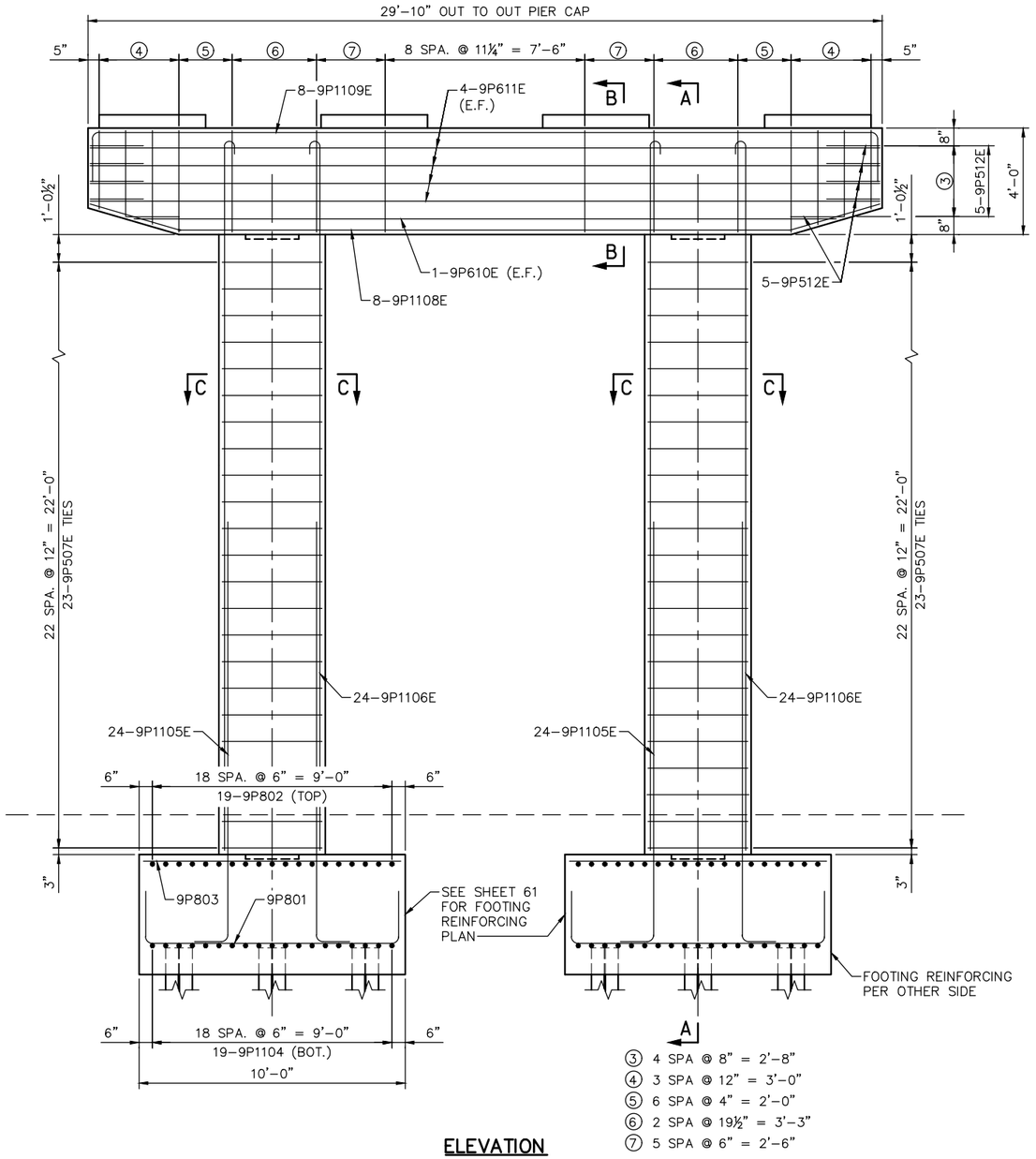

ELEVATION

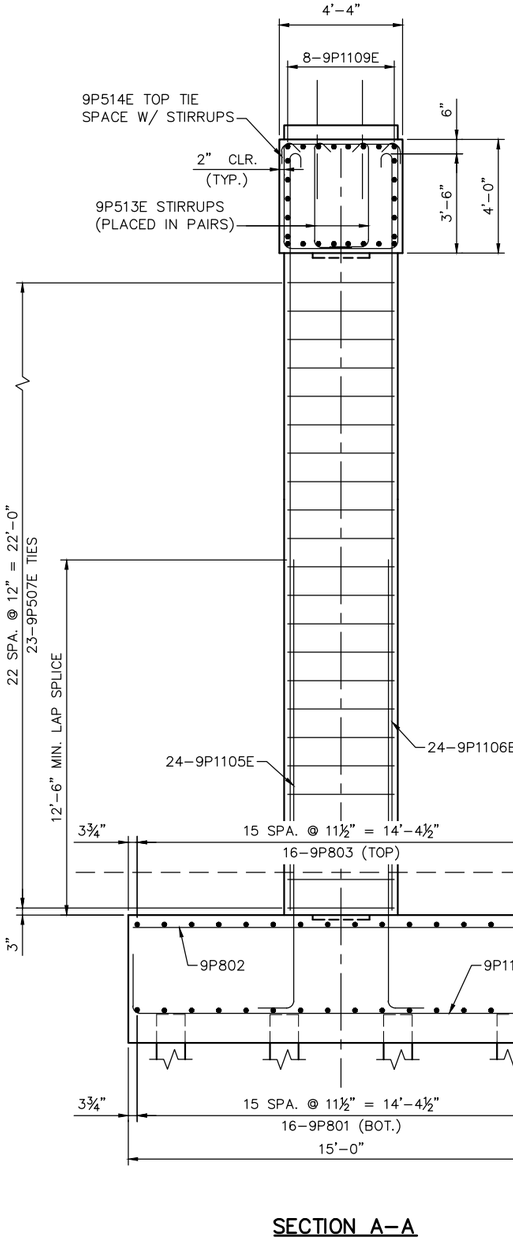

SECTION A-A

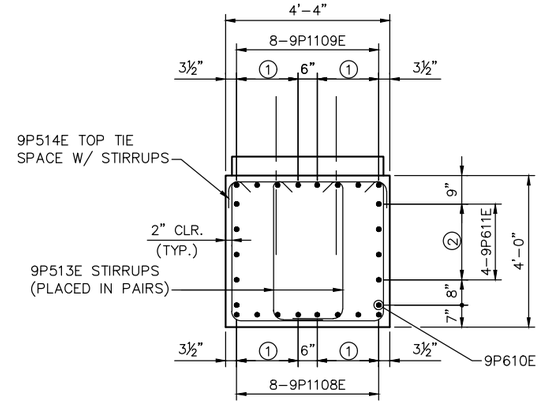

SECTION B-B

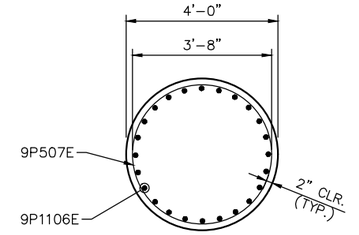

SECTION C-C

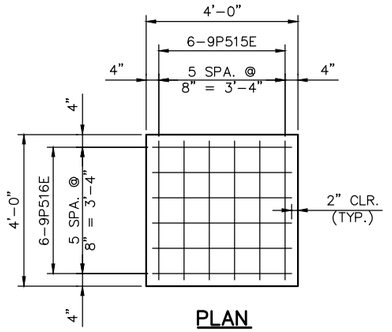

PLAN

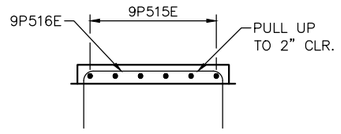

ELEVATION

PEDESTAL REINFORCEMENT

NO.	DATE	BY	CHECK	DESIGN	REVISION / SUBMITTAL

DESIGNED BY: KR CHECKED BY: KJK
DRAWN BY: MSK CHECKED BY: KJK

AECOM Kimley»Horn

90% SUBMISSION - 01/22/16

METROPOLITAN COUNCIL

SOUTHWEST Green Line LRT Extension

CIVIL - VOLUME 4G
5TH AVENUE AND 7TH STREET
BRIDGE 27C18
PIER 9 REINFORCEMENT 1

DISCIPLINE: STRUCTURES
SHEET NAME: CBR27C18-BRG-PIR-020-2

SHEET 60 OF 148

Jan, 18 2016 02:45 pm V:\3400_ADC\CAD\SEGMENT E4\PLAN SHEETS\STRUCTURES\27C18\CBR27C18-BRG-PIR-020.dwg By: Victor.Madrid

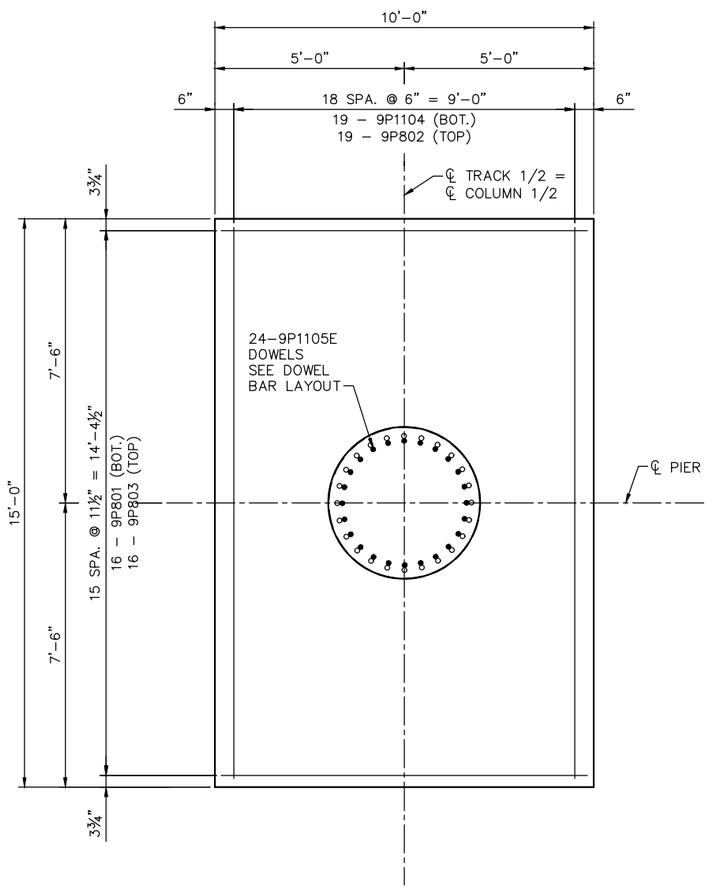

FOOTING PLAN – PIER 9
(BOTH FOOTINGS SAME REINFORCING)

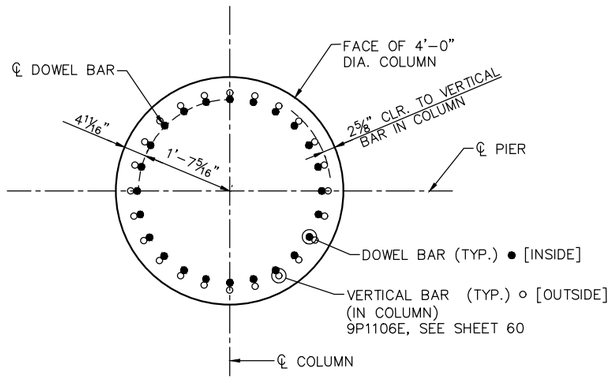

DOWEL BAR LAYOUT

BILL OF REINFORCEMENT FOR PIER 9

BAR	NO.	LENGTH	SHAPE	LOCATION
9P801	32	13'-6"	BENT	FOOTING BOT. TRANS.
9P802	38	14'-6"	STR.	FOOTING TOP LONG.
9P803	32	9'-6"	STR.	FOOTING TOP TRANS.
9P1104	38	18'-6"	BENT	FOOTING BOT. LONG.
9P1105E	48	18'-0"	BENT	COLUMN DOWEL
9P1106E	48	28'-2"	BENT	COLUMN VERTICAL
9P507E	46	14'-0"	BENT	COLUMN TIES
9P1108E	8	29'-9"	BENT	BOT. LONG.
9P1109E	8	33'-6"	BENT	TOP. LONG.
9P610E	2	26'-1"	STR.	PIER CAP SIDE BOT.
9P611E	8	29'-6"	STR.	SIDE TYP.
9P512E	10	5'-10"	BENT	PIER CAP SIDE END TIE
9P513E	82	*	BENT	PIER CAP SIDE STIRRUP
9P514E	41	7'-4"	BENT	PIER CAP STIRRUP HAT
9P515E	24	5'-8"	BENT	PEDESTAL TIE
9P516E	24	5'-8"	BENT	PEDESTAL TIE

* 4 SERIES STIRRUPS 11'–3" TO 9'–3"

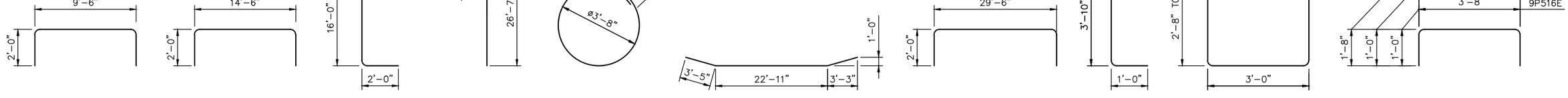

9P801 | 9P1104 | 9P1105E | 9P1106E | 9P507E | 9P1108E | 9P1109E | 9P512E | 9P513E | 9P514E, 9P515E & 9P516E

NO.	DATE	BY	CHECK	DESIGN	REVISION / SUBMITTAL

DESIGNED BY: KR CHECKED BY: KJK
DRAWN BY: MSK CHECKED BY: KJK

AECOM Kimley»Horn

90% SUBMISSION - 01/22/16

METROPOLITAN COUNCIL

SOUTHWEST Green Line LRT Extension

CIVIL - VOLUME 4G
5TH AVENUE AND 7TH STREET
BRIDGE 27C18
PIER 9 REINFORCEMENT 2

DISCIPLINE: STRUCTURES
SHEET NAME: CBR27C18-BRG-PIR-020-3

SHEET 61 OF 148

Jan. 18 2016 02:45 pm V:\3400_ADC\CAD\SEGMENT E4\PLAN SHEETS\STRUCTURES\27C18\CBR27C18-BRG-PIR-020.dwg By: Victor.Madrid

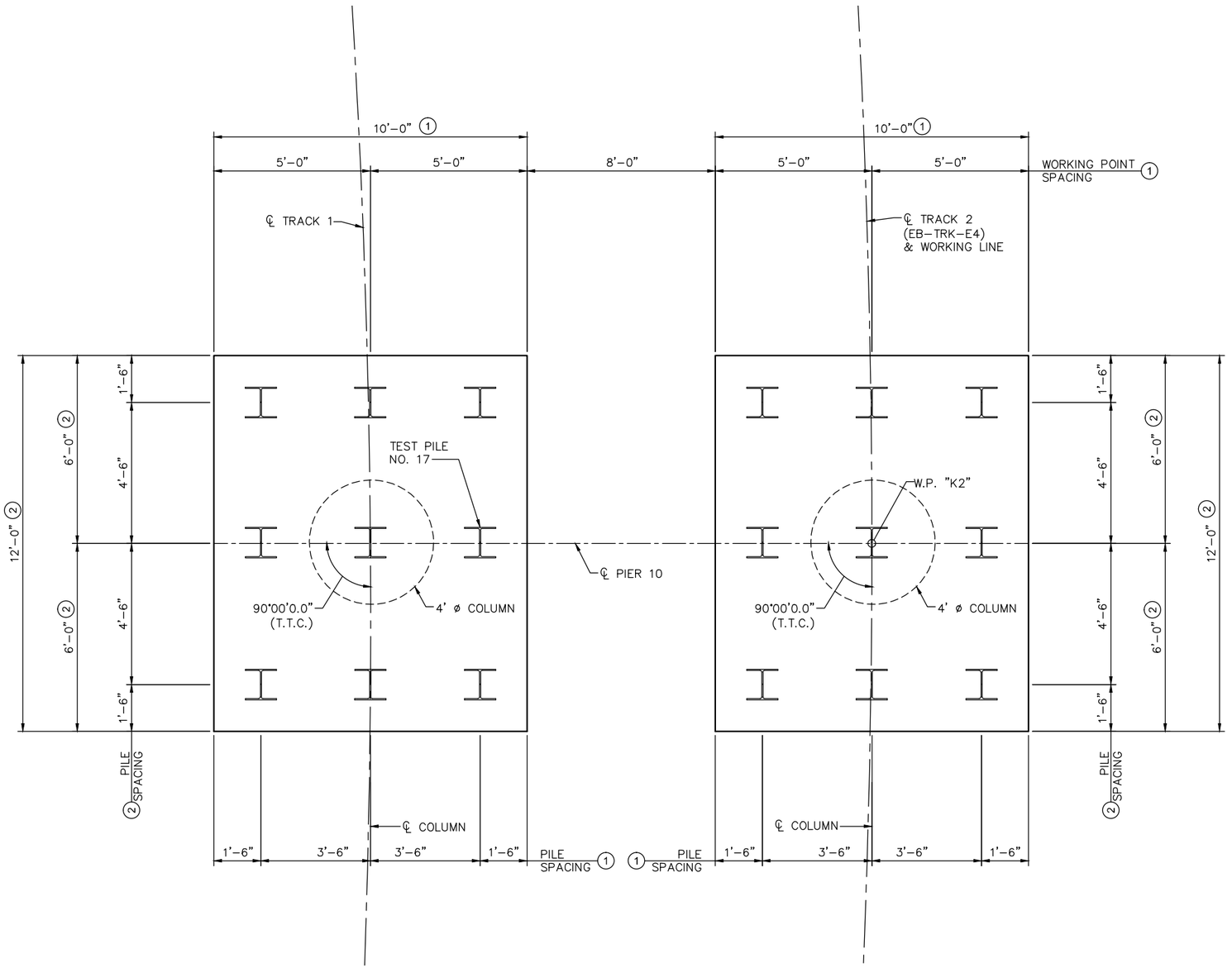

FOOTING PLAN

PIER 10 COMPUTED PILE LOAD - TONS/PILE	
FACTORED DEAD LOAD	44
FACTORED LIVE LOAD	15
FACTORED OVERTURNING	24
* FACTORED DESIGN LOAD	83
* BASED ON STRENGTH V LOAD COMBINATION.	

PIER 10 REQUIRED NOMINAL PILE BEARING RESISTANCE FOR H-PILES Rn - TONS/PILE		
FIELD CONTROL METHOD	φdyn	* Rn
PDA	0.65	128
* Rn = (FACTORED DESIGN LOAD) / φdyn		

GENERAL PILE NOTES

1 STEEL H–TEST PILE 140 FT. LONG
17 STEEL H–PILES EST. LENGTH 130 FT.
18 STEEL H–PILES REQ'D FOR PIER 10

PILE SPACING IS SHOWN AT BOTTOM OF FOOTING.

ALL PILES TO BE HP12X53 WITH A PILE TIP PROTECTION

FOR PILE SPLICE DETAILS SEE B–DETAIL B202

NOTES:

① DIMENSIONS MEASURED ALONG ℄ PIER

② DIMENSIONS MEASURED NORMAL TO ℄ PIER

NO.	DATE	BY	CHECK	DESIGN	REVISION / SUBMITTAL

DESIGNED BY: KR CHECKED BY: KJK
DRAWN BY: MSK CHECKED BY: KJK

AECOM Kimley»Horn

90% SUBMISSION - 01/22/16

METROPOLITAN COUNCIL

SOUTHWEST Green Line LRT Extension

CIVIL - VOLUME 4G
5TH AVENUE AND 7TH STREET
BRIDGE 27C18
PIER 10 DETAILS 1

DISCIPLINE: STRUCTURES
SHEET NAME: CBR27C18-BRG-PIR-021

SHEET 62 OF 148

Jan, 19 2016 09:01 am V:\3400_ADC\CAD\SEGMENT E4\PLAN SHEETS\STRUCTURES\27C18\CBR27C18-BRG-PIR-021.dwg By: Victor.Madrid

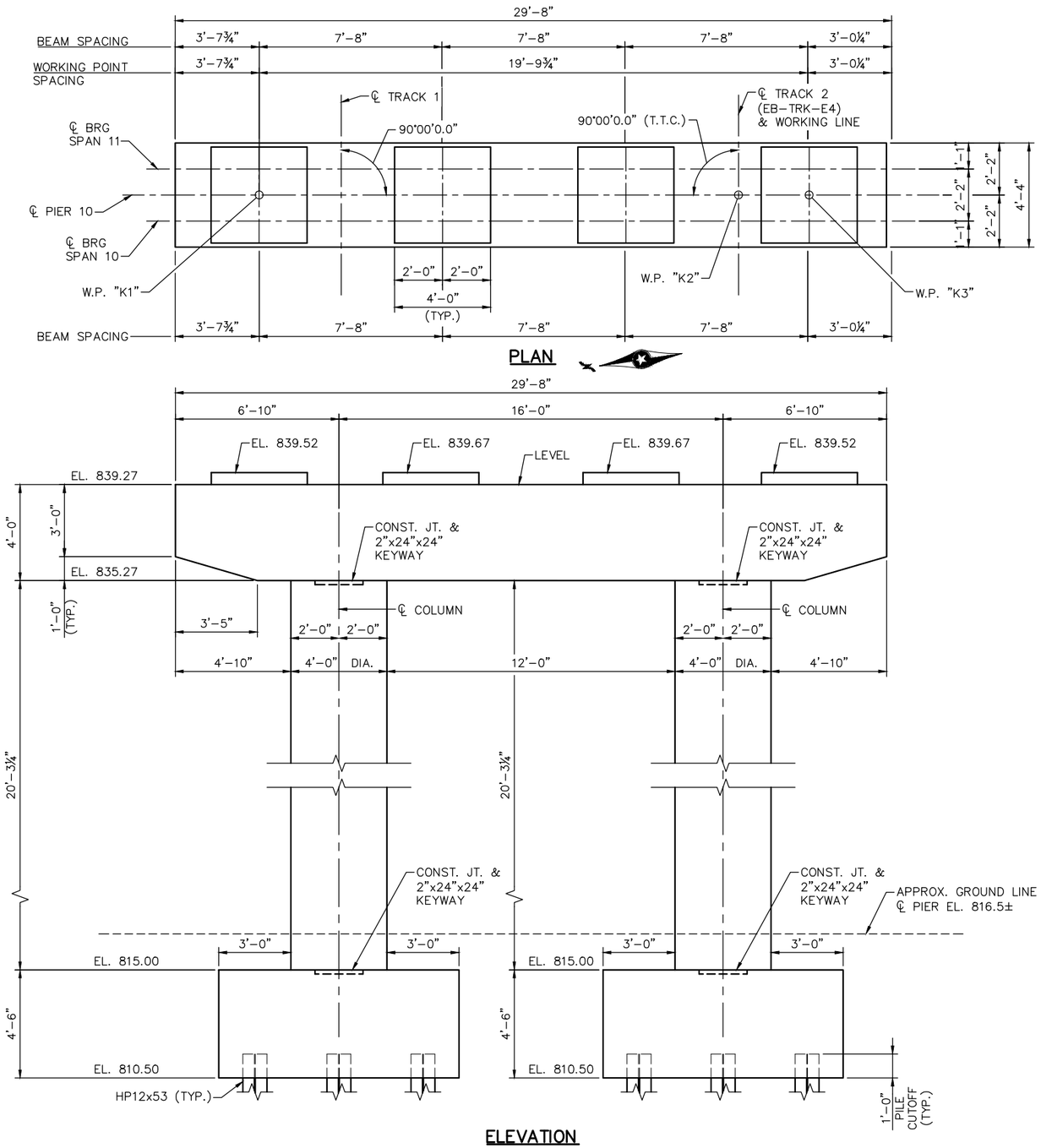

PLAN

ELEVATION

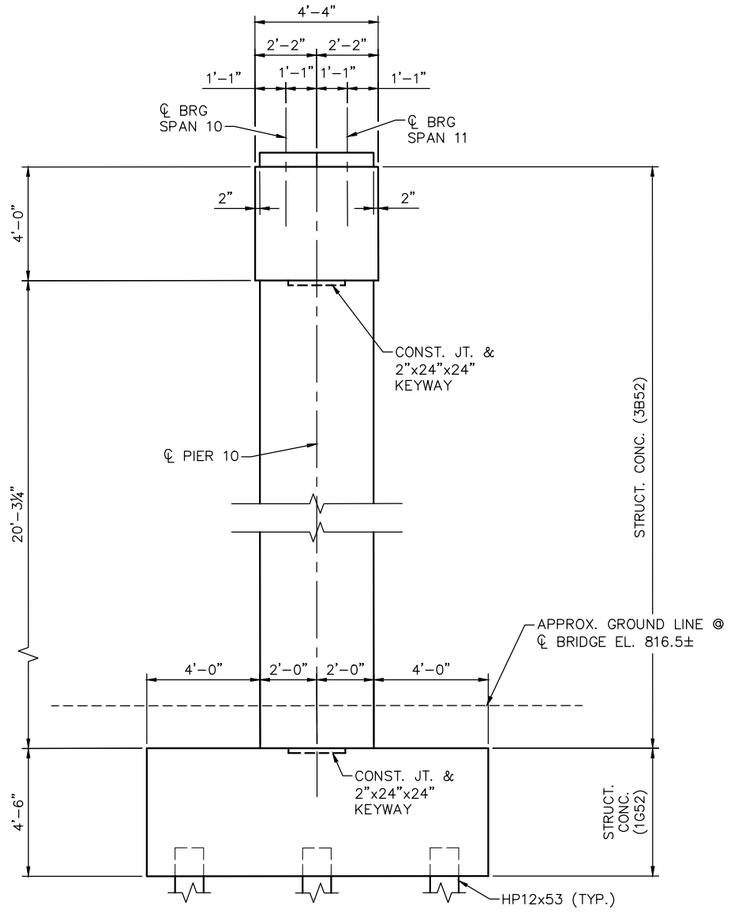

END VIEW

NO.	DATE	BY	CHECK	DESIGN	REVISION / SUBMITTAL

DESIGNED BY: KR | CHECKED BY: KJK
DRAWN BY: MSK | CHECKED BY: KJK

AECOM Kimley»Horn

90% SUBMISSION - 01/22/16

METROPOLITAN COUNCIL

SOUTHWEST Green Line LRT Extension

CIVIL - VOLUME 4G
5TH AVENUE AND 7TH STREET BRIDGE 27C18
PIER 10 DETAILS 2

DISCIPLINE: STRUCTURES

SHEET NAME: CBR27C18-BRG-PIR-022-1

SHEET 63 OF 148

Jan, 18 2016 02:47 pm v:\3400_ADC\CAD\SEGMENT E4\PLAN SHEETS\STRUCTURES\27C18\CBR27C18-BRG-PIR-022.dwg By: Victor.Madrid

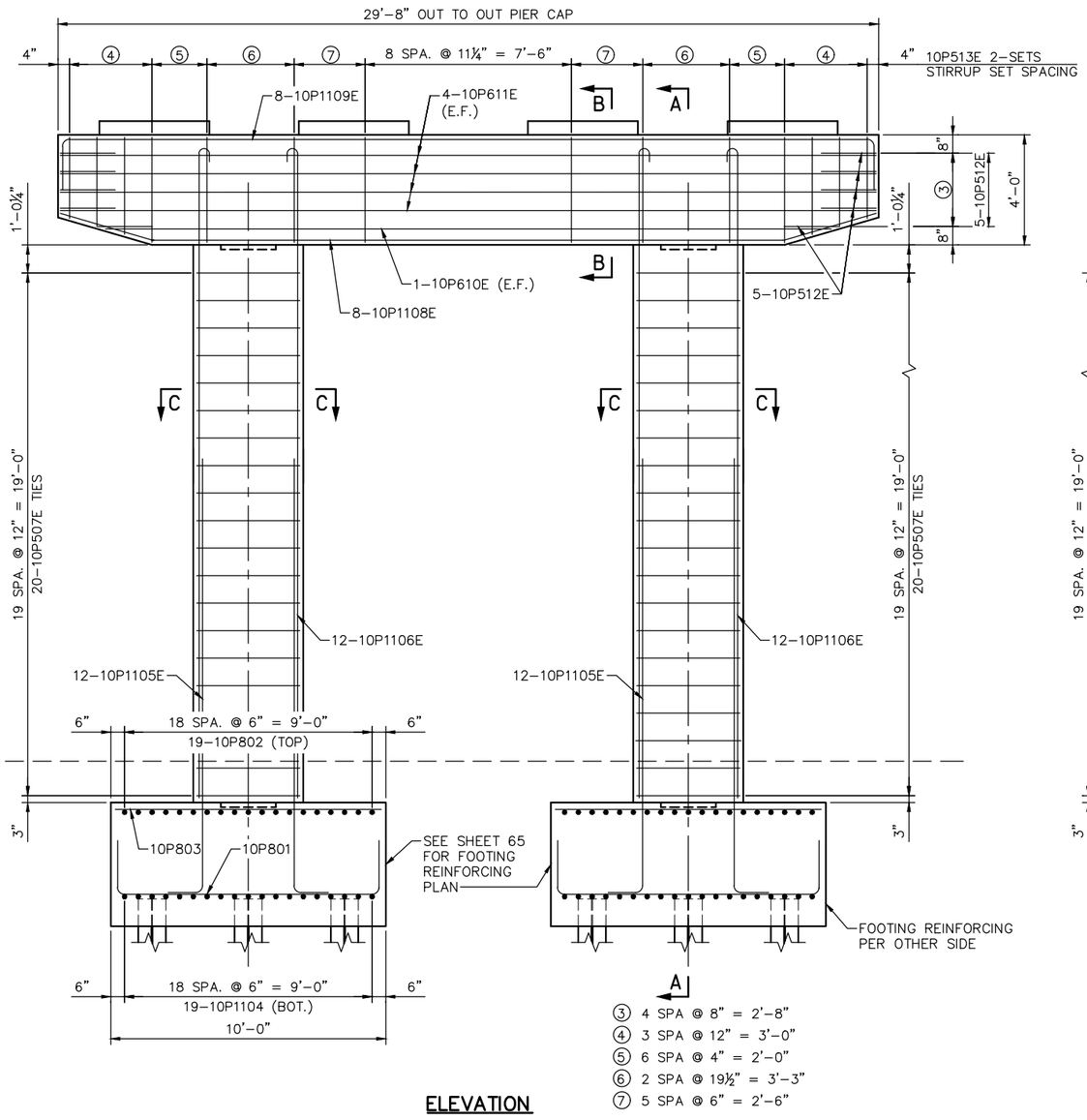

ELEVATION

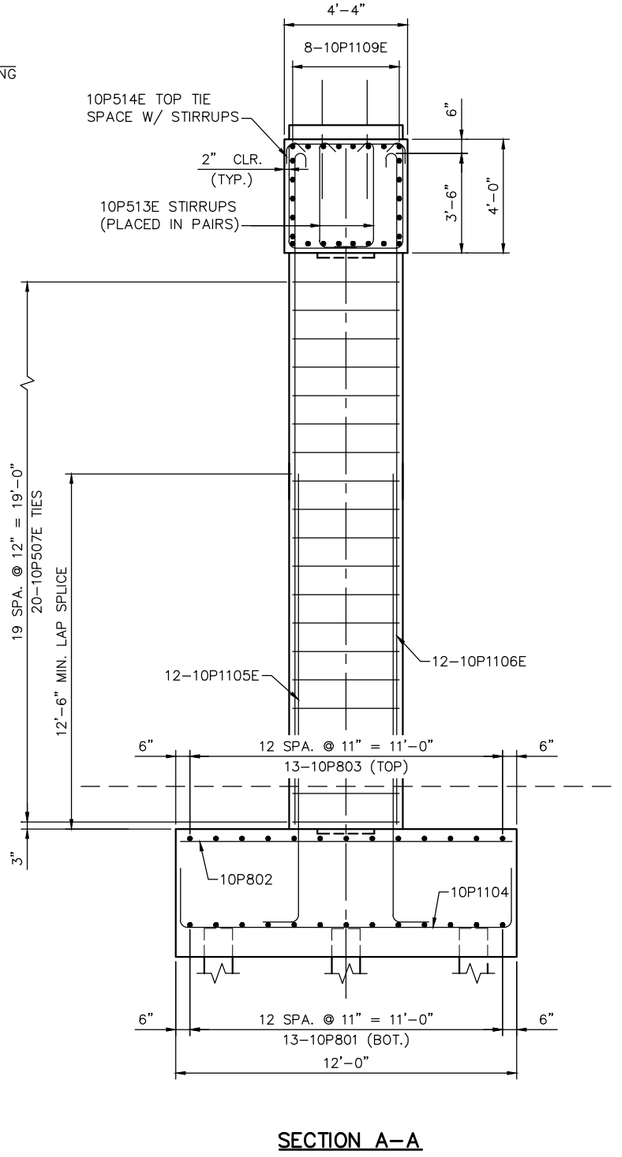

SECTION A–A

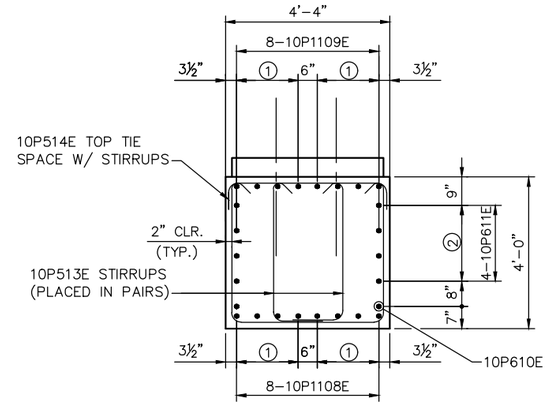

SECTION B–B

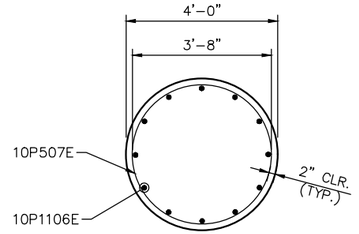

SECTION C–C

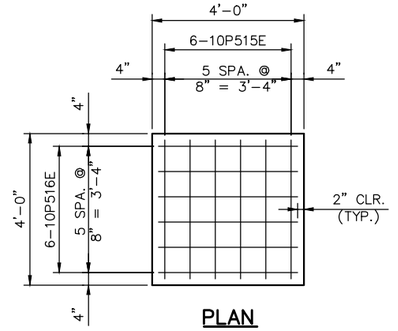

PLAN

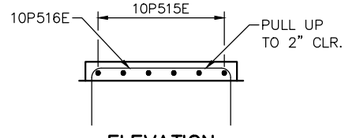

ELEVATION

PEDESTAL REINFORCEMENT

NO.	DATE	BY	CHECK	DESIGN	REVISION / SUBMITTAL

DESIGNED BY: KR CHECKED BY: KJK
DRAWN BY: MSK CHECKED BY: KJK

AECOM Kimley»Horn

90% SUBMISSION - 01/22/16

METROPOLITAN COUNCIL

SOUTHWEST Green Line LRT Extension

CIVIL - VOLUME 4G
5TH AVENUE AND 7TH STREET BRIDGE 27C18
PIER 10 REINFORCEMENT 1

DISCIPLINE: STRUCTURES

SHEET NAME: CBR27C18-BRG-PIR-022-2

SHEET 64 OF 148

Jan. 18 2016 02:47 pm V:\3400_ADC\CAD\SEGMENT E4\PLAN SHEETS\STRUCTURES\27C18\CBR27C18-BRG-PIR-022.dwg By: Victor.Madrid

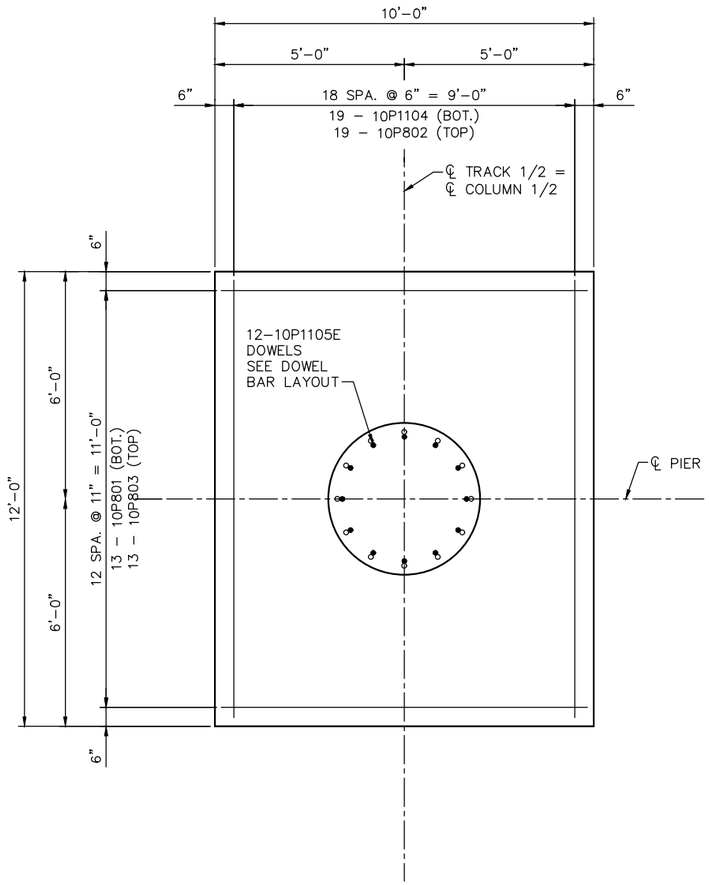

FOOTING PLAN – PIER 10
(BOTH FOOTINGS SAME REINFORCING)

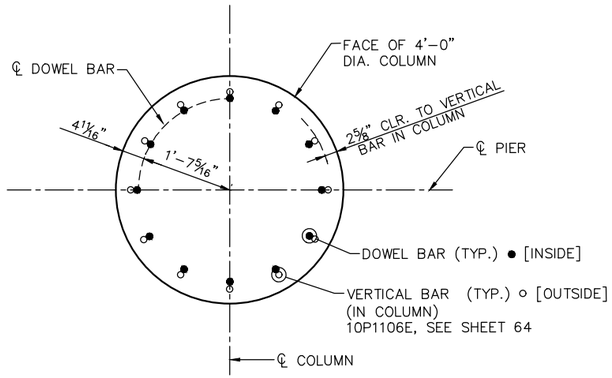

DOWEL BAR LAYOUT

BILL OF REINFORCEMENT FOR PIER 10

BAR	NO.	LENGTH	SHAPE	LOCATION
10P801	26	13'-6"	BENT	FOOTING BOT. TRANS.
10P802	38	15'-6"	BENT	FOOTING TOP LONG.
10P803	26	9'-6"	STR.	FOOTING TOP TRANS.
10P1104	38	11'-6"	STR.	FOOTING BOT. LONG.
10P1105E	24	18'-0"	BENT	COLUMN DOWEL
10P1106E	24	25'-2"	BENT	COLUMN VERTICAL
10P507E	40	14'-0"	BENT	COLUMN TIES
10P1108E	8	29'-7"	BENT	BOT. LONG.
10P1109E	8	33'-4"	BENT	TOP. LONG.
10P610E	2	26'-1"	STR.	PIER CAP SIDE BOT.
10P611E	8	29'-4"	STR.	SIDE TYP.
10P512E	10	5'-10"	BENT	PIER CAP SIDE END TIE
10P513E	82	*	BENT	PIER CAP SIDE STIRRUP
10P514E	41	7'-4"	BENT	PIER CAP STIRRUP HAT
10P515E	24	5'-8"	BENT	PEDESTAL TIE
10P516E	24	5'-8"	BENT	PEDESTAL TIE

* 4 SERIES STIRRUPS 11'–3" TO 9'–3"

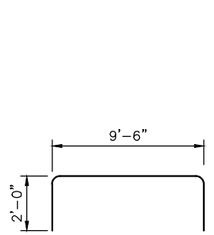

10P801

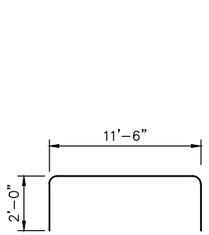

10P1104

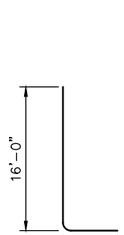

10P1105E

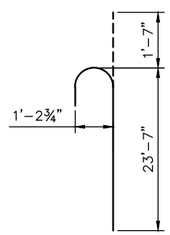

10P1106E

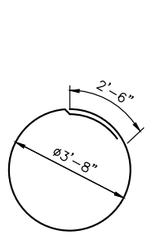

10P507E

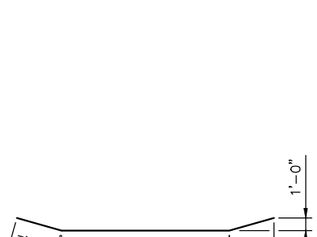

10P1108E

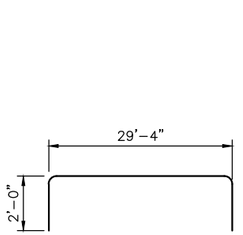

10P1109E

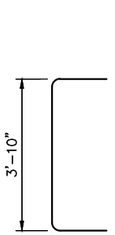

10P512E

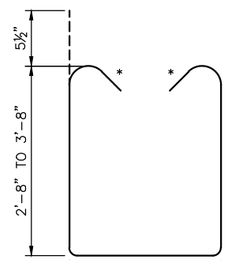

10P513E

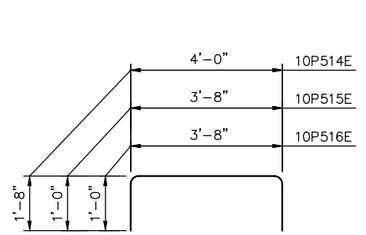

10P514E, 10P515E & 10P516E

NO.	DATE	BY	CHECK	DESIGN	REVISION / SUBMITTAL

DESIGNED BY: KR | CHECKED BY: KJK
DRAWN BY: MSK | CHECKED BY: KJK

AECOM Kimley»Horn

90% SUBMISSION - 01/22/16

METROPOLITAN COUNCIL

SOUTHWEST Green Line LRT Extension

CIVIL - VOLUME 4G
5TH AVENUE AND 7TH STREET
BRIDGE 27C18
PIER 10 REINFORCEMENT 2

DISCIPLINE: STRUCTURES
SHEET NAME: CBR27C18-BRG-PIR-022-3

SHEET 65 OF 148

Jan, 18 2016 02:47 pm v:\3400_ADC\CAD\SEGMENT E4\PLAN SHEETS\STRUCTURES\27C18\CBR27C18-BRG-PIR-022.dwg By: Victor.Madrid

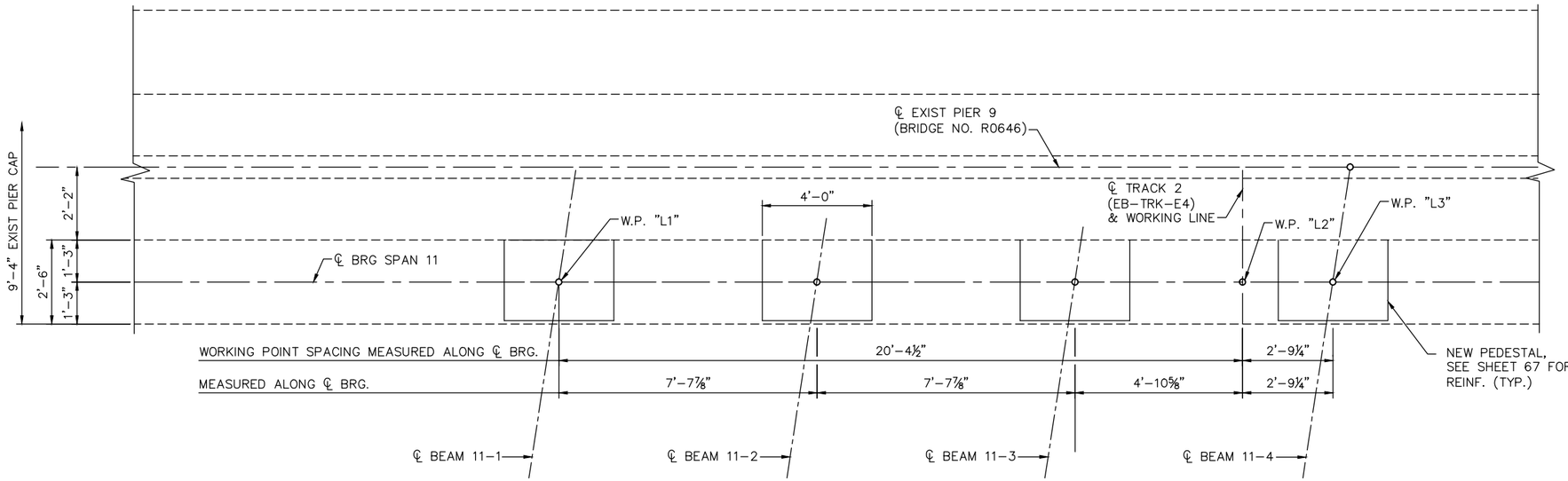

PLAN

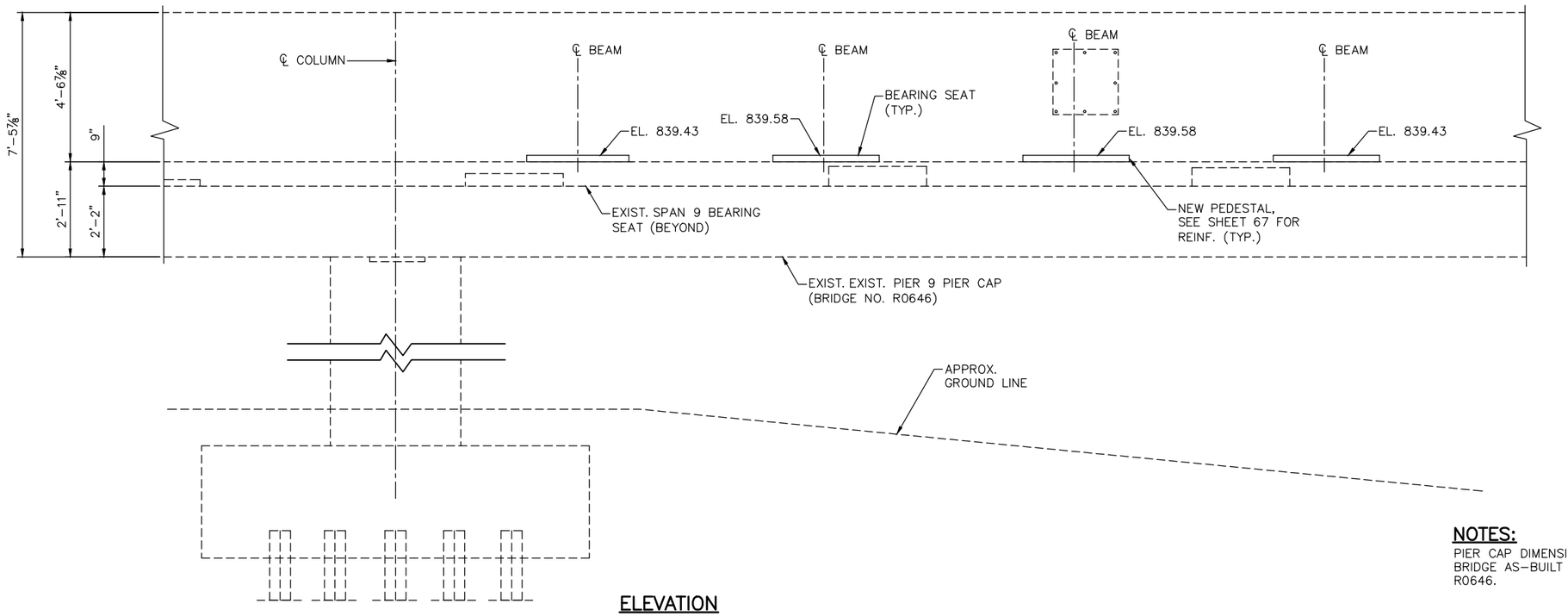

ELEVATION
LOOKING AHEAD STA

NOTES:

PIER CAP DIMENSIONS SHOWN BASED ON EXISTING BRIDGE AS-BUILT DRAWINGS FOR BRIDGE NO. R0646.

NO.	DATE	BY	CHECK	DESIGN	REVISION / SUBMITTAL

DESIGNED BY: KR | CHECKED BY: KJK
DRAWN BY: MSK | CHECKED BY: KJK

AECOM Kimley»Horn

90% SUBMISSION - 01/22/16

METROPOLITAN COUNCIL

SOUTHWEST Green Line LRT Extension

CIVIL - VOLUME 4G
5TH AVENUE AND 7TH STREET
BRIDGE 27C18
EXISTING PIER 9 DETAILS 1

DISCIPLINE: STRUCTURES
SHEET NAME: CBR27C18-BRG-PIR-023

SHEET 66 OF 148

Jan, 18 2016 02:48 pm V:\3400_ADC\CAD\SEGMENT E4\PLAN SHEETS\STRUCTURES\27C18\CBR27C18-BRG-PIR-023.dwg By: Victor.Madrid

BILL OF REINFORCEMENT FOR PIER 11

BAR	NO.	LENGTH	SHAPE	LOCATION
11P515E	32	3'-6"	BENT	PEDESTAL LONG.
11P516E	48	2'-0"	BENT	PEDESTAL TRANS.

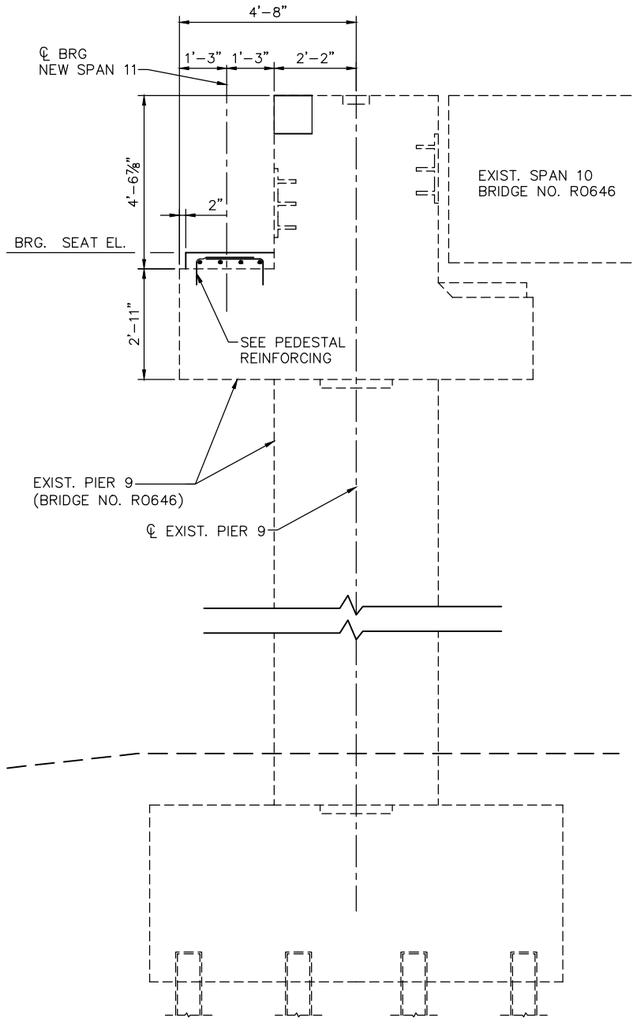

END ELEVATION

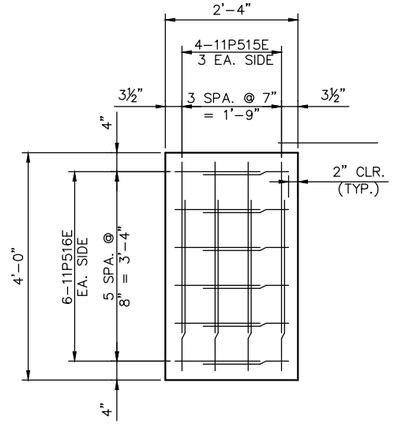

PLAN

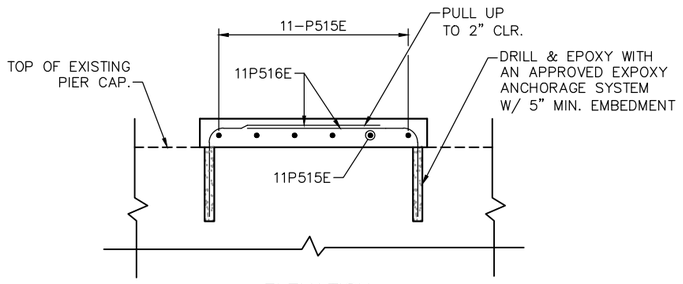

ELEVATION

PEDESTAL REINFORCEMENT

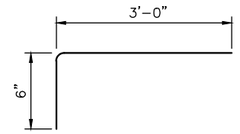

11P515E

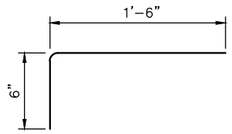

7P516E

NOTES:

PIER CAP DIMENSIONS SHOWN BASED ON EXISTING BRIDGE AS-BUILT DRAWINGS FOR BRIDGE NO. R0646.

NO.	DATE	BY	CHECK	DESIGN	REVISION / SUBMITTAL

DESIGNED BY: KR | CHECKED BY: KJK
DRAWN BY: MSK | CHECKED BY: KJK

AECOM Kimley»Horn

90% SUBMISSION - 01/22/16

METROPOLITAN COUNCIL

SOUTHWEST Green Line LRT Extension

CIVIL - VOLUME 4G
5TH AVENUE AND 7TH STREET
BRIDGE 27C18
EXISTING PIER 9 DETAILS 2

DISCIPLINE: STRUCTURES
SHEET NAME: CBR27C18-BRG-PIR-024

SHEET 67 OF 148

Jan, 18 2016 02:48 pm V:\3400_ADC\CAD\SEGMENT E4\PLAN SHEETS\STRUCTURES\27C18\CBR27C18-BRG-PIR-24.dwg By: Victor.Madrid

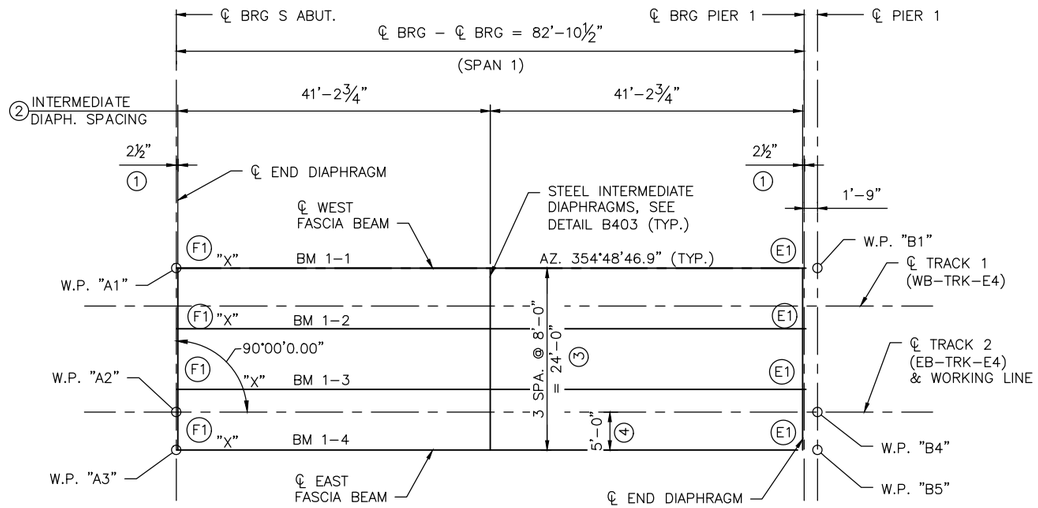

SPAN 1

FRAMING PLAN – UNIT 1

LEGEND:

BM 1–1
- 1 — DENOTES BEAM I.D. NUMBER IN SPAN
- 1 — DENOTES SPAN NUMBER

NOTES:

BEAM AZIMUTHS SHOWN FOR EACH SPAN ARE TYPICAL UNLESS NOTED OTHERWISE

① CONCRETE END DIAPHRAGM SHALL BE PARALLEL TO CENTERLINE BEARING. SEE DETAIL B814.

② INTERMEDIATE DIAPHRAGM SPACING ALONG CENTERLINE OF FASCIA BEAM.

③ MN45 PRESTRESSED CONCRETE BEAMS.

④ DIMENSION MEASURED BETWEEN WORKING POINTS AT SUBSTRUCTURE.

(E1) DENOTES EXPANSION CURVED PLATE BEARING ASSEMBLY, TYPE 1. SEE DETAIL B311.

(F1) DENOTES FIXED CURVED PLATE BRG. ASSEMBLY, TYPE 1. SEE DETAIL B310.

"X" INDICATES END OF BEAM.

NO.	DATE	BY	CHECK	DESIGN	REVISION / SUBMITTAL

DESIGNED BY: KR | CHECKED BY: KJK
DRAWN BY: MSK | CHECKED BY: KJK

AECOM Kimley»Horn

90% SUBMISSION - 01/22/16

METROPOLITAN COUNCIL

SOUTHWEST Green Line LRT Extension

CIVIL - VOLUME 4G
5TH AVENUE AND 7TH STREET
BRIDGE 27C18
FRAMING PLAN 1

DISCIPLINE: STRUCTURES

SHEET NAME: CBR27C18-BRG-FRP-001

SHEET 68 OF 148

Jan. 18 2016 02:49 pm v:\3400_ADC\CAD\SEGMENT E4\PLAN SHEETS\STRUCTURES\27C18\CBR27C18-BRG-FRP-001.dwg By: Victor.Madrid

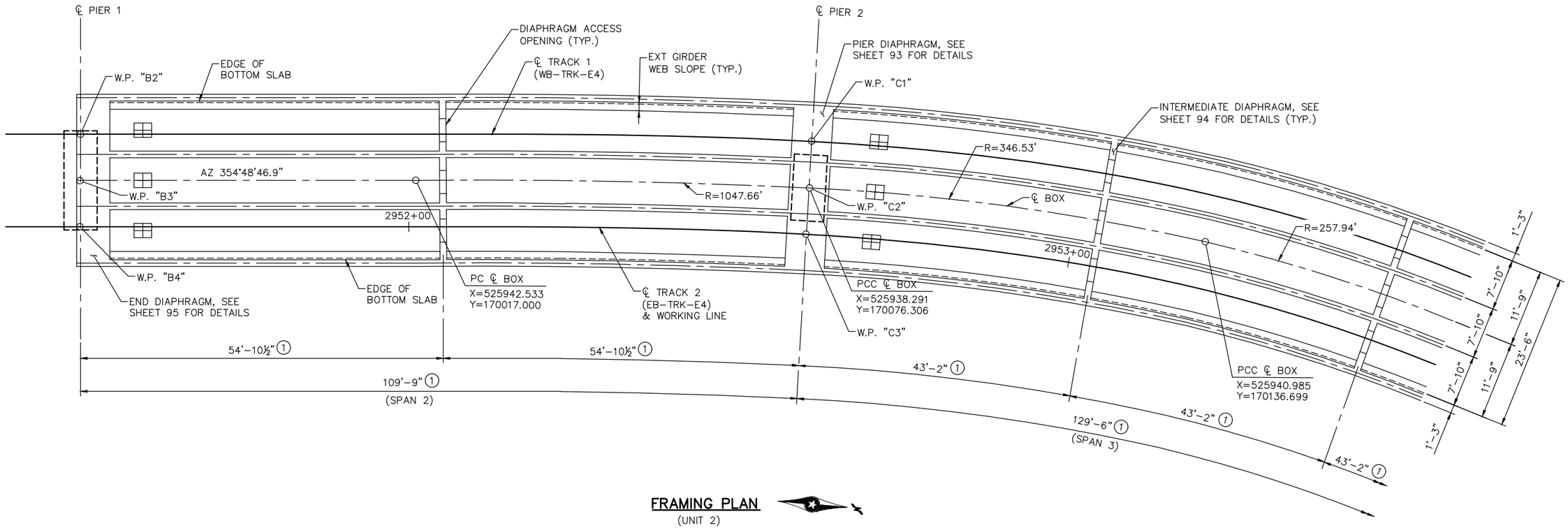

FRAMING PLAN
(UNIT 2)

NOTES:

⊞ ACCESS OPENING IN BOTTOM OF BOX GIRDER CELL. SEE DETAIL B942.

(1) DIMENSIONS MEASURED ALONG ℄ TRACK 2.

NO.	DATE	BY	CHECK	DESIGN	REVISION / SUBMITTAL

DESIGNED BY: KJK | CHECKED BY: DJL
DRAWN BY: MSK | CHECKED BY: DJL

AECOM Kimley»Horn

90% SUBMISSION - 01/22/16

METROPOLITAN COUNCIL

SOUTHWEST Green Line LRT Extension

CIVIL - VOLUME 4G
5TH AVENUE AND 7TH STREET BRIDGE 27C18
FRAMING PLAN 2

DISCIPLINE: STRUCTURES

SHEET NAME: CBR27C18-BRG-FRP-002

SHEET 69 OF 148

Jan, 18 2016 02:50 pm v:\3400_ADC\CAD\SEGMENT E4\PLAN SHEETS\STRUCTURES\27C18\CBR27C18-BRG-FRP-002.dwg By: Victor.Madrid

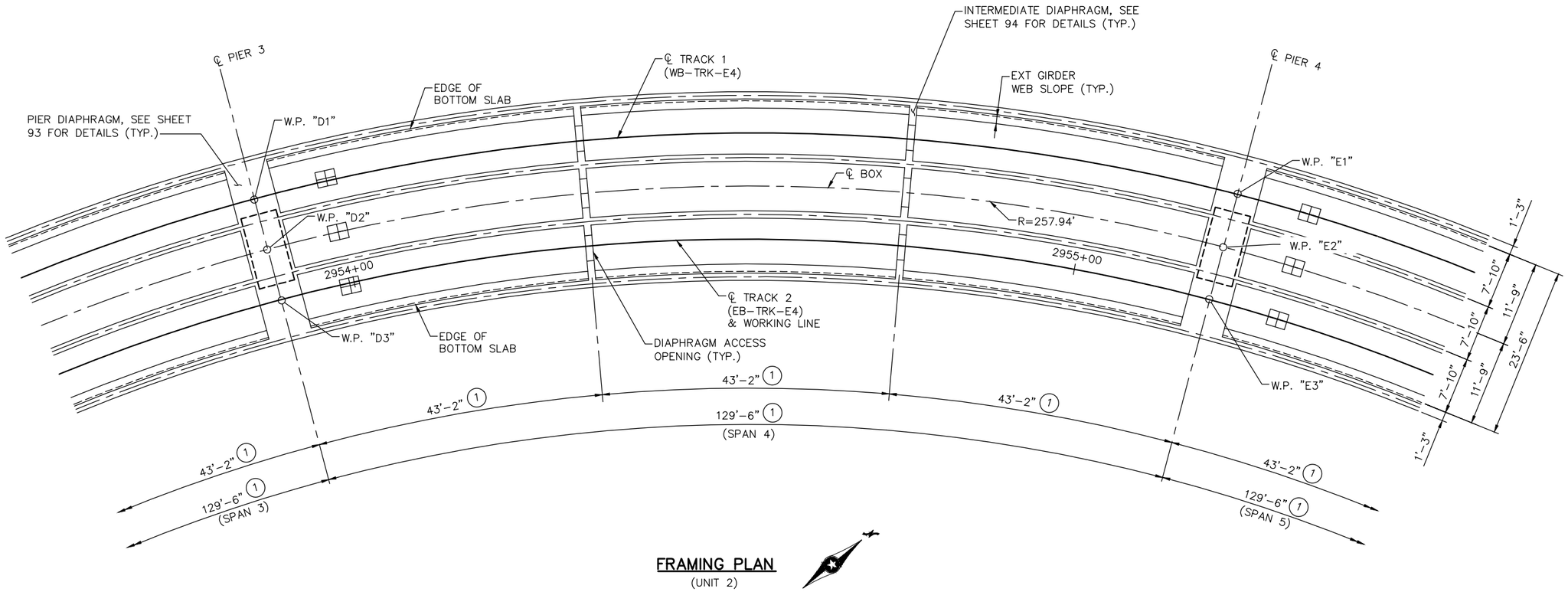

FRAMING PLAN
(UNIT 2)

NOTES:

ACCESS OPENING IN BOTTOM OF BOX GIRDER CELL. SEE DETAIL B942.

(1) DIMENSIONS MEASURED ALONG ℄ TRACK 2.

NO.	DATE	BY	CHECK	DESIGN	REVISION / SUBMITTAL

DESIGNED BY: KJK | CHECKED BY: DJL
DRAWN BY: MSK | CHECKED BY: DJL

AECOM Kimley»Horn

90% SUBMISSION - 01/22/16

METROPOLITAN COUNCIL

SOUTHWEST Green Line LRT Extension

CIVIL - VOLUME 4G
5TH AVENUE AND 7TH STREET
BRIDGE 27C18
FRAMING PLAN 3

DISCIPLINE: STRUCTURES
SHEET NAME: CBR27C18-BRG-FRP-003

SHEET 70 OF 148

Jan, 18 2016 02:51 pm V:\3400_ADC\CAD\SEGMENT E4\PLAN SHEETS\STRUCTURES\27C18\CBR27C18-BRG-FRP-003.dwg By: Victor.Madrid

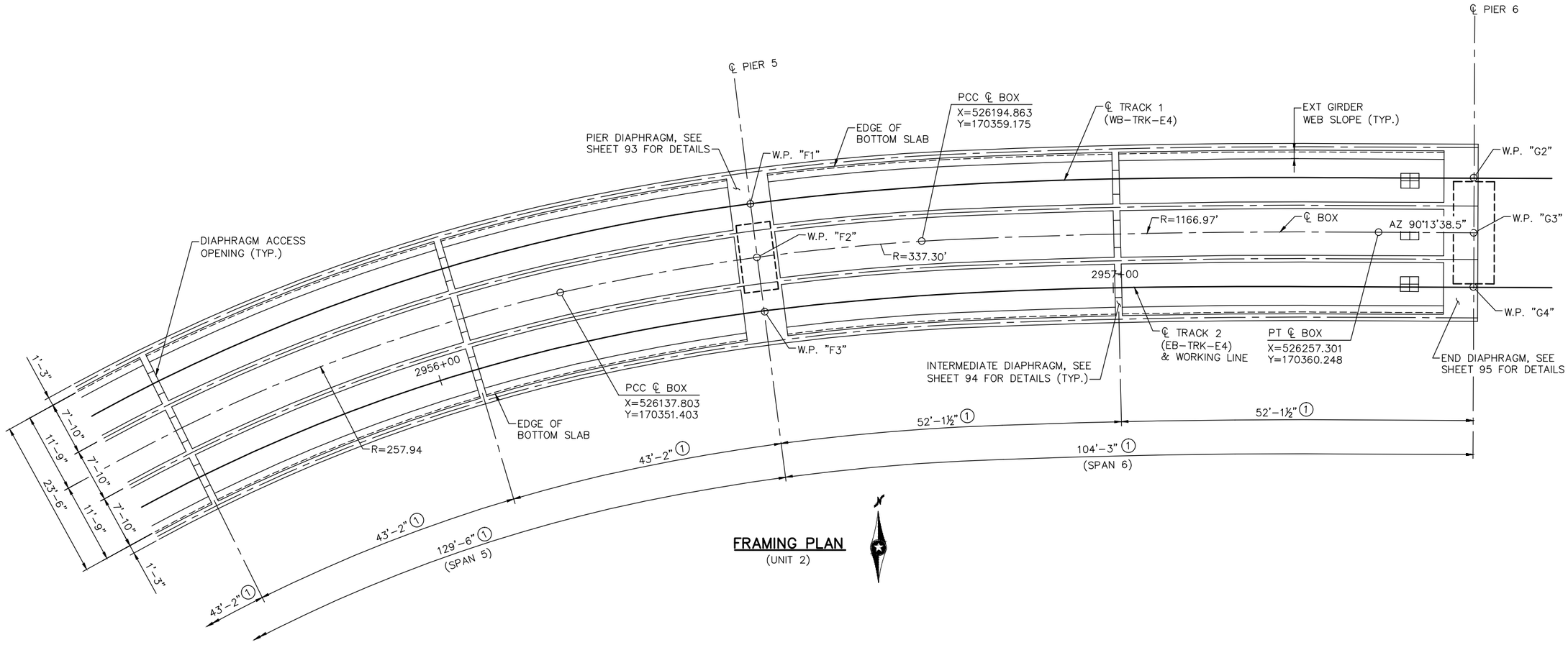

FRAMING PLAN
(UNIT 2)

NOTES:

⊞ ACCESS OPENING IN BOTTOM OF BOX GIRDER CELL. SEE DETAIL B942.

① DIMENSIONS MEASURED ALONG ℄ TRACK 2.

NO.	DATE	BY	CHECK	DESIGN	REVISION / SUBMITTAL

DESIGNED BY: KJK | CHECKED BY: DJL
DRAWN BY: MSK | CHECKED BY: DJL

AECOM Kimley»Horn

90% SUBMISSION - 01/22/16

METROPOLITAN COUNCIL

SOUTHWEST Green Line LRT Extension

CIVIL - VOLUME 4G
5TH AVENUE AND 7TH STREET
BRIDGE 27C18
FRAMING PLAN 4

DISCIPLINE: STRUCTURES

SHEET NAME: CBR27C18-BRG-FRP-004

SHEET 71 OF 148

Jan, 18 2016 02:52 pm v:\3400_ADC\CAD\SEGMENT E4\PLAN SHEETS\STRUCTURES\27C18\CBR27C18-BRG-FRP-004.dwg By: Victor.Madrid

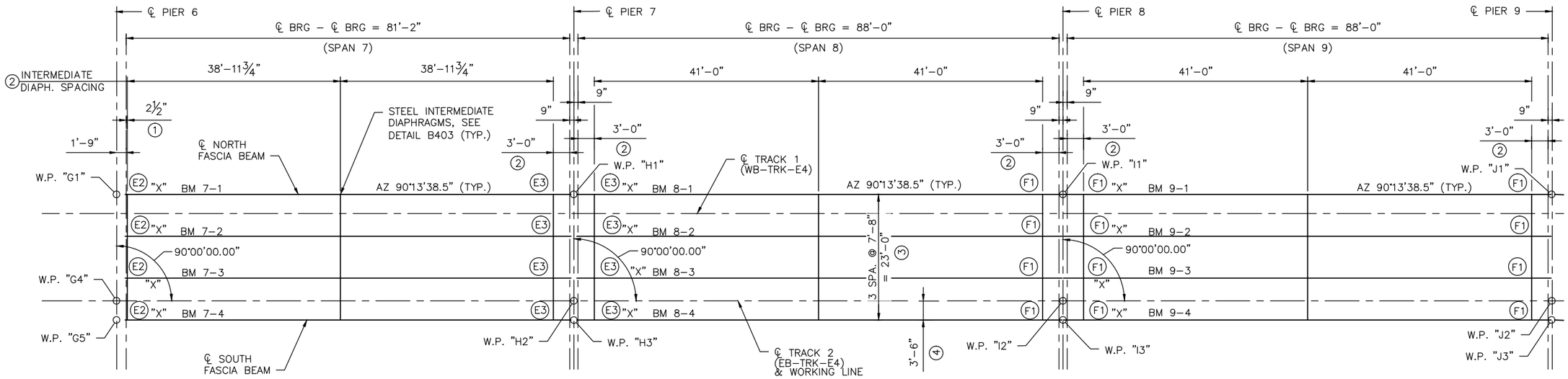

SPAN 7 SPAN 8 SPAN 9

FRAMING PLAN – UNIT 3

LEGEND:

BM 1–1
- DENOTES BEAM I.D. NUMBER IN SPAN
- DENOTES SPAN NUMBER

NOTES:

BEAM AZIMUTHS SHOWN FOR EACH SPAN ARE TYPICAL UNLESS NOTED OTHERWISE

(1) CONCRETE END DIAPHRAGM SHALL BE PARALLEL TO CENTERLINE BEARING. SEE DETAIL B814.

(2) INTERMEDIATE DIAPHRAGM SPACING ALONG CENTERLINE OF FASCIA BEAM.

(3) MN45 PRESTRESSED CONCRETE BEAMS.

(4) DIMENSION MEASURED BETWEEN WORKING POINTS AT SUBSTRUCTURE.

(E2) DENOTES EXPANSION CURVED PLATE BEARING ASSEMBLY, TYPE 2. SEE DETAIL B311.

(E3) DENOTES EXPANSION CURVED PLATE BEARING ASSEMBLY, TYPE 3. SEE DETAIL B311.

(F1) DENOTES FIXED CURVED PLATE BRG. ASSEMBLY, TYPE 1. SEE DETAIL B310.

"X" INDICATES END OF BEAM.

NO.	DATE	BY	CHECK	DESIGN	REVISION / SUBMITTAL

DESIGNED BY: KR CHECKED BY: KJK
DRAWN BY: MSK CHECKED BY: KJK

AECOM Kimley»Horn

90% SUBMISSION - 01/22/16

METROPOLITAN COUNCIL

SOUTHWEST Green Line LRT Extension

CIVIL - VOLUME 4G
5TH AVENUE AND 7TH STREET
BRIDGE 27C18
FRAMING PLAN 5

DISCIPLINE: STRUCTURES
SHEET NAME: CBR27C18-BRG-FRP-005

SHEET 72 OF 148

Jan, 18 2016 02:53 pm v:\3400_ADC\CAD\SEGMENT E4\PLAN SHEETS\STRUCTURES\27C18\CBR27C18-BRG-FRP-005.dwg By: Victor.Madrid

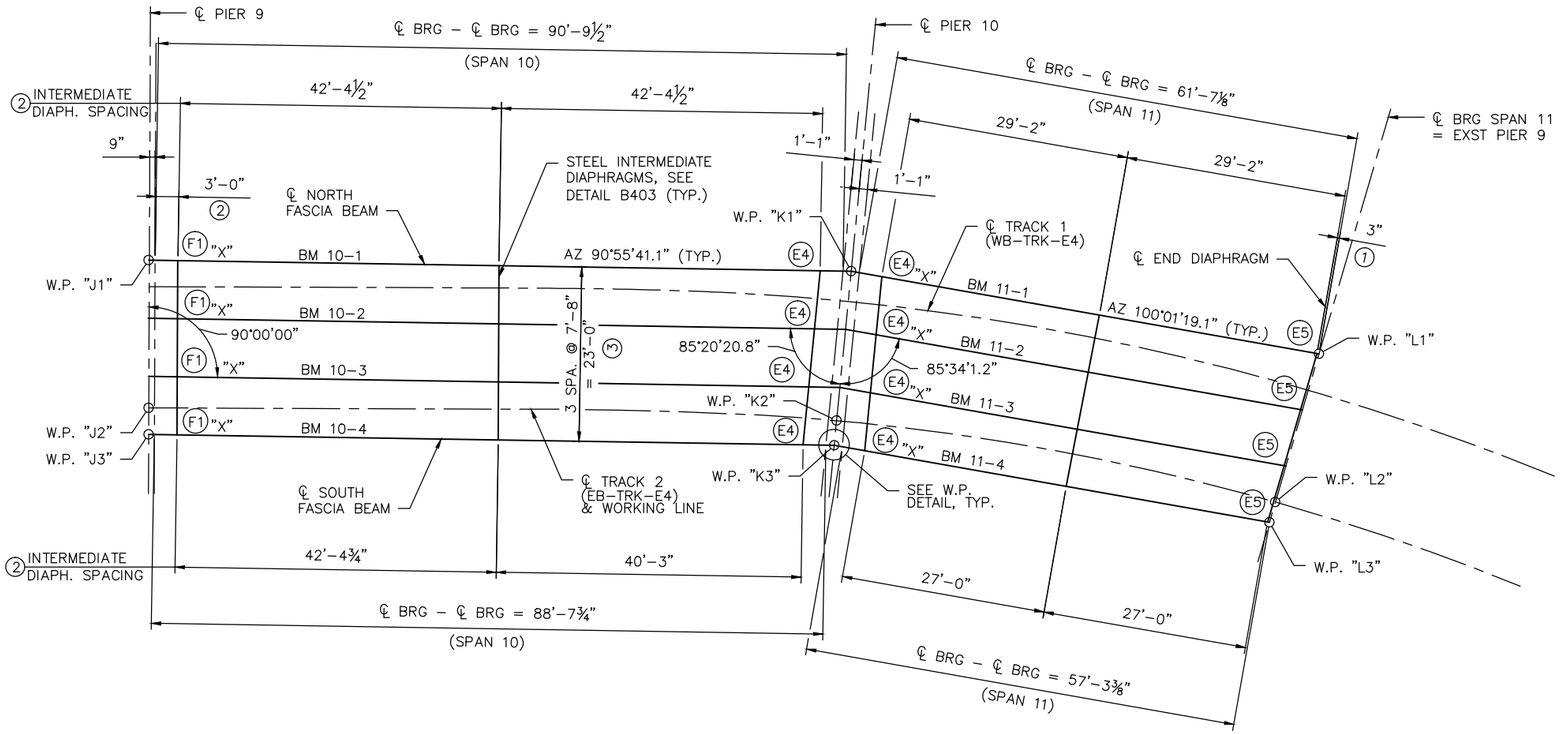

SPAN 10

SPAN 11

FRAMING PLAN – UNIT 3

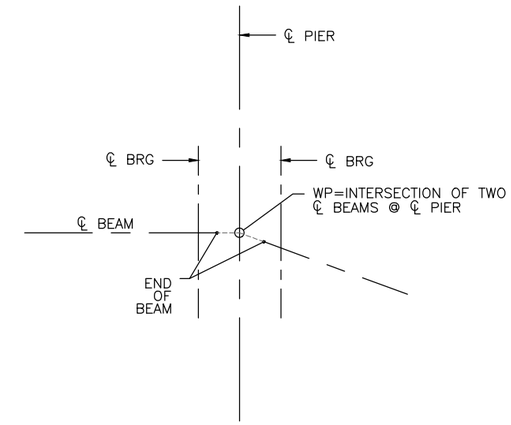

W.P. DETAIL

LEGEND:

BM 1–1

- DENOTES BEAM I.D. NUMBER IN SPAN
- DENOTES SPAN NUMBER

NOTES:

BEAM AZIMUTHS SHOWN FOR EACH SPAN ARE TYPICAL UNLESS NOTED OTHERWISE

① CONCRETE END DIAPHRAGM SHALL BE PARALLEL TO CENTERLINE BEARING. SEE DETAIL B814.

② INTERMEDIATE DIAPHRAGM SPACING ALONG CENTERLINE OF FASCIA BEAM.

③ MN45 PRESTRESSED CONCRETE BEAMS.

④ DIMENSION MEASURED BETWEEN WORKING POINTS AT SUBSTRUCTURE.

E4 DENOTES EXPANSION CURVED PLATE BEARING ASSEMBLY, TYPE 4. SEE DETAIL B311.

E5 DENOTES EXPANSION CURVED PLATE BEARING ASSEMBLY, TYPE 5. SEE DETAIL B311.

F1 DENOTES FIXED CURVED PLATE BRG. ASSEMBLY, TYPE 1. SEE DETAIL B310.

"X" INDICATES END OF BEAM.

NO.	DATE	BY	CHECK	DESIGN	REVISION / SUBMITTAL

DESIGNED BY: KR | CHECKED BY: KJK
DRAWN BY: MSK | CHECKED BY: KJK

AECOM Kimley»Horn

90% SUBMISSION - 01/22/16

METROPOLITAN COUNCIL

SOUTHWEST Green Line LRT Extension

CIVIL - VOLUME 4G
5TH AVENUE AND 7TH STREET
BRIDGE 27C18
FRAMING PLAN 6

DISCIPLINE: STRUCTURES
SHEET NAME: CBR27C18-BRG-FRP-006

SHEET 73 OF 148

Jan, 18 2016 02:53 pm V:\3400_ADC\CAD\SEGMENT E4\PLAN SHEETS\STRUCTURES\27C18\CBR27C18-BRG-FRP-006.dwg By: Victor.Madrid

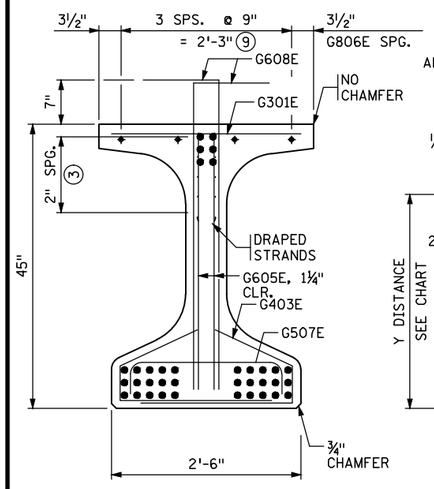

END VIEW

CUT STRANDS FLUSH WITH CONCRETE. COVER ENDS WITH ONE COMPONENT POLYURETHANE SEALANT PER APPROVED PRODUCT LIST. (G609E BAR NOT SHOWN)

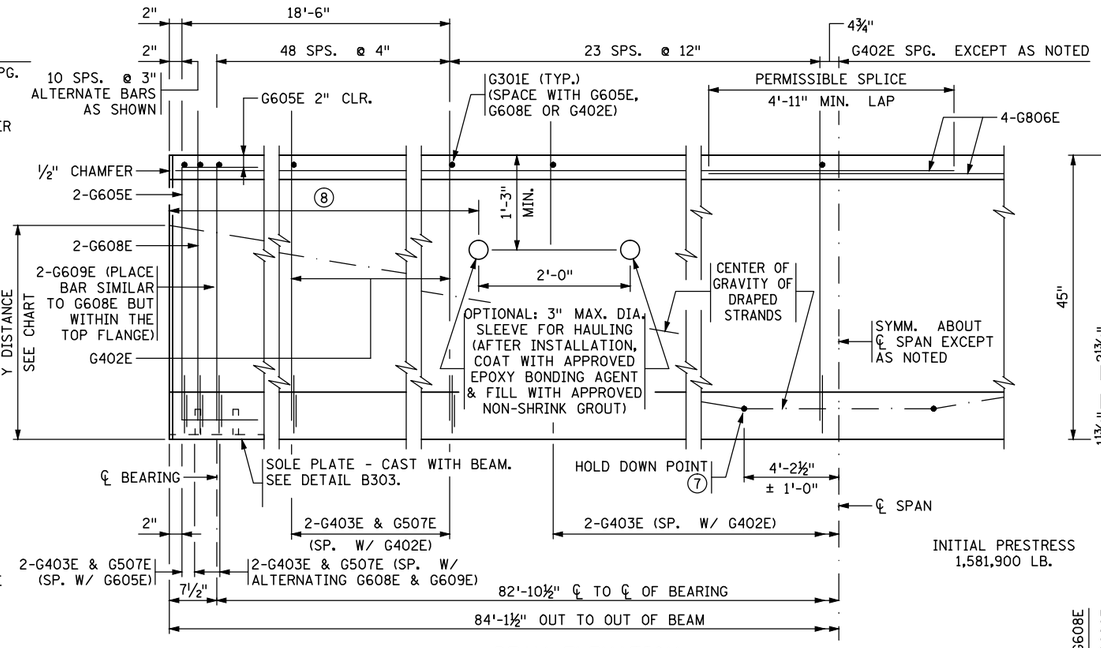

BEAM ELEVATION

INITIAL PRESTRESS 1,581,900 LB.

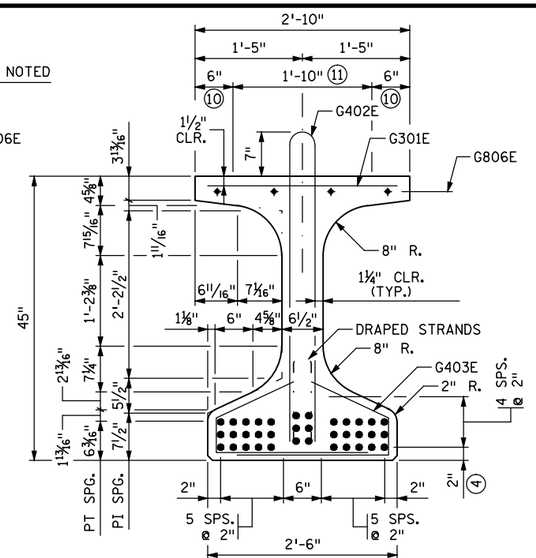

SECTION AT ℄ SPAN

Y DISTANCES (INCHES)			
	NO.	℄ SPAN	END
STRAIGHT STRANDS	30	4.0	
DRAPED STRANDS	6	5.0	40.00 □
TOTAL STRANDS	36	4.17	

Y = DISTANCE TO CENTER OF GRAVITY OF STRANDS FROM BOTTOM OF BEAM. ALL STRANDS SPACED 2" CENTER TO CENTER, HORIZONTALLY AND VERTICALLY, EXCEPT AS NOTED.

□ A TOLERANCE OF ± 1" WILL BE PERMITTED IN THIS DIMENSION.

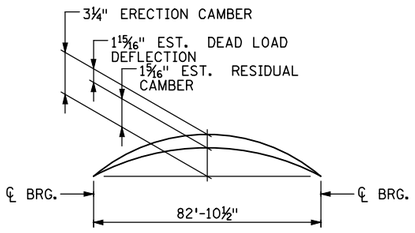

CAMBER DIAGRAM

ERECTION CAMBER SHOWN IS AFTER DIAPHRAGMS ARE IN PLACE.

DEAD LOAD DEFLECTION SHOWN IS FOR WEIGHT OF SLAB, WEARING COURSE, BARRIER, SIDEWALK AND MEDIAN WHERE APPLICABLE.

CONTRACTOR WILL TAKE ELEVATIONS AT TOP OF BEAMS AFTER ERECTION AND WILL ALLOW FOR DEFLECTION SHOWN TO ENABLE BUILDING FORMS TO CORRECT GRADE AND SPECIFIED SLAB THICKNESS. PROVIDE COPY OF ELEVATIONS TO THE ENGINEER.

CALCULATED PRESTRESS LOSSES	
ELASTIC SHORTENING LOSS	22.50 KSI
LONG TERM LOSSES	23.58 KSI
TOTAL LOSSES	46.08 KSI

MINIMUM CONCRETE STRENGTH - K.S.I.	
(1) f'ci	(2) f'c
7.0 KSI	8.0 KSI

PRESTRESSING STRAND DIAMETER	
(5)	½" □
(5)	0.60" ☒

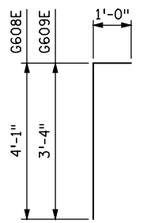

G608E & G609E

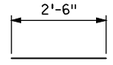

G301E

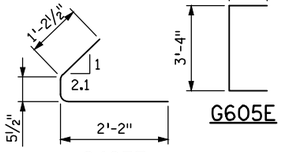

G403E

G605E

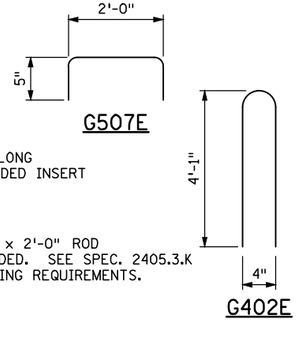

G507E

DETAIL "A"

G402E

GENERAL NOTES

PROVIDE HANDLING HOOKS OR DEVICES AS REQUIRED BY CONTRACTOR.

MARK EACH BEAM SHOWING BRIDGE NUMBER, CASTING DATE, AND INDIVIDUAL IDENTIFICATION LETTERS AND NUMBERS ON THE FACE OF THE BEAM, NEAR THE END, SO LOCATED THAT THEY WILL BE EXPOSED AFTER THE END DIAPHRAGMS HAVE BEEN CAST. MARK FASCIA BEAMS ON THE INSIDE FACE. ENSURE ALL MARKINGS ARE STENCILLED AND CLEARLY LEGIBLE. FOR LOCATION OF BEAMS, SEE FRAMING PLAN.

~~ALL MATERIAL AND WORK SHOWN OR NOTED ON THIS SHEET IS INCLUDED IN UNIT PRICE BID FOR PRESTRESSED CONCRETE BEAMS. SEE SPEC. 2405.~~

SEE FRAMING PLAN FOR BEAM END MARKED "X" AND DIAPHRAGM SPACING.

APPROXIMATE WEIGHT OF BEAM IS 30.0 TONS.

AS AN ALTERNATE TO THE END DIAPHRAGM ANCHORAGES SHOWN, THE CONTRACTOR MAY SUBMIT DETAILS OF A CAST-IN-PLACE ANCHORAGE TO THE ENGINEER FOR APPROVAL. ANCHORAGE MUST PROVIDE AN ULTIMATE PULL OUT STRENGTH OF 15 KIPS PER ANCHORAGE.

APPLY AN APPROVED SEALER TO THE SIDES OF THE BEAM NEAR EACH END PER THE SPECIAL PROVISIONS.

(1) MINIMUM CONCRETE STRENGTH AT TIME OF PRESTRESS TRANSFER.

(2) MINIMUM CONCRETE STRENGTH WHEN BEAM CAN BE TRANSPORTED AND INSTALLED.

(3) DRAPED STRANDS.

(4) STRAIGHT STRANDS.

(5) USE 7-WIRE LOW RELAXATION PRESTRESSING STRAND, CONFORMING TO ASTM A416, GRADE 270.

(6) ~~FOR INTEGRAL ABUTMENT, SOLE PLATE CAN BE ELIMINATED OR REPLACED WITH AN APPROVED PROTECTION PLATE. BEAMS DETAILED TO INCLUDE A TAPERED PLATE PER STANDARD FIGURE B309 MUST INCLUDE SOLE PLATE.~~

(7) CENTER OF GRAVITY OF HOLD DOWNS WHEN MULTIPLE HOLD DOWNS ARE USED.

(8) DIMENSION DETERMINED BY CONTRACTOR. MAINTAIN 2" MINIMUM CLEAR FROM STRANDS.

(9) TWO INSIDE BARS MAY BE PLACED ADJACENT TO VERTICAL STIRRUP FOR TYING CONVENIENCE.

(10) STEEL TROWEL TO SMOOTH FINISH AND APPLY BOND BREAKER PER APPROVED PRODUCTS LIST.

(11) ROUGH FLOAT AND BROOM TRANSVERSELY FOR BOND PER SPEC. 2405.3.D.

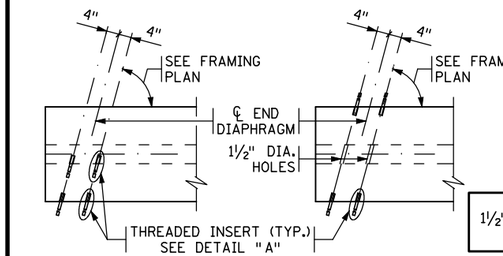

CONCRETE END DIAPHRAGM

PARAPET ABUTMENT
(SEE DETAIL B814 FOR DIAPHRAGM DETAILS)

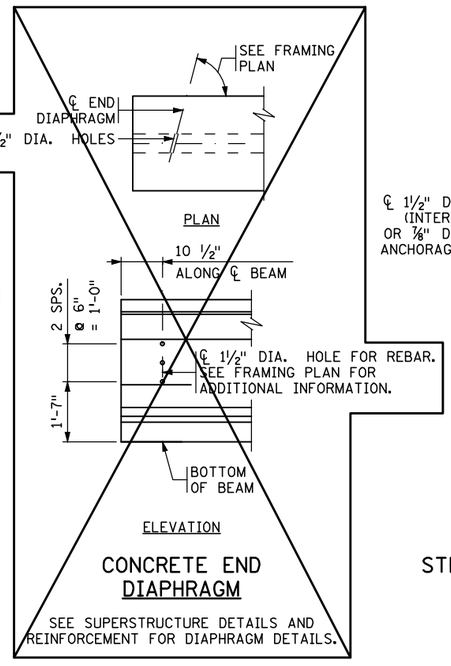

CONCRETE END DIAPHRAGM

SEE SUPERSTRUCTURE DETAILS AND REINFORCEMENT FOR DIAPHRAGM DETAILS.

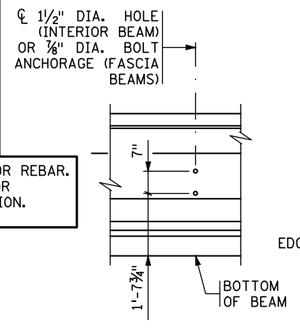

STEEL INTERMEDIATE DIAPHRAGM

(SEE DETAIL B403 FOR DIAPHRAGM DETAILS)

REVISED:

APPROVED: JANUARY 13, 2015
Nancy Daubenberger
STATE BRIDGE ENGINEER

CERTIFIED BY _____ 08\28\15
LICENSED PROFESSIONAL ENGINEER — DATE
NAME: ENGINEER LIC. NO. #####

TITLE: MN45" PRESTRESSED CONCRETE BEAM (PRETENSIONED) MN45-84

DES: KR	DR: MSK
CHK: KJK	CHK: KJK

APPROVED:

BEAMS 1-1 TO 1-4

FIG. 5-397.507

SHEET NO. 74 OF 148 SHEETS

BRIDGE NO. 27C18

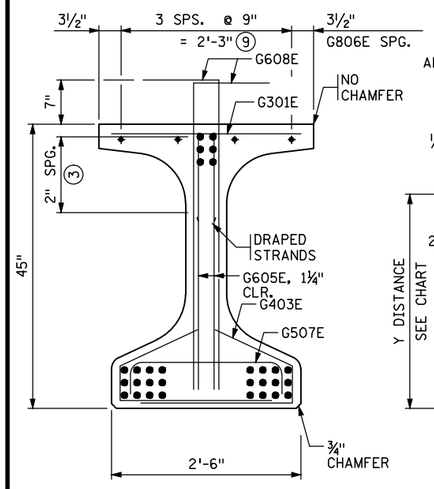

END VIEW

CUT STRANDS FLUSH WITH CONCRETE.
COVER ENDS WITH ONE COMPONENT POLYURETHANE SEALANT PER APPROVED PRODUCT LIST.
(G609E BAR NOT SHOWN)

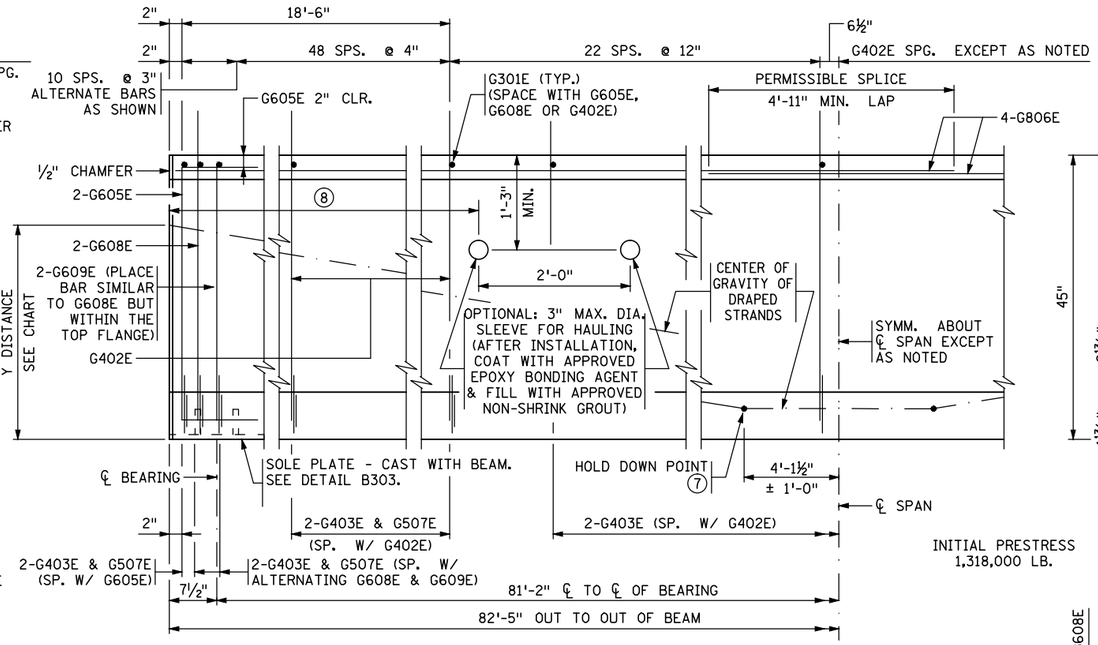

BEAM ELEVATION

INITIAL PRESTRESS
1,318,000 LB.

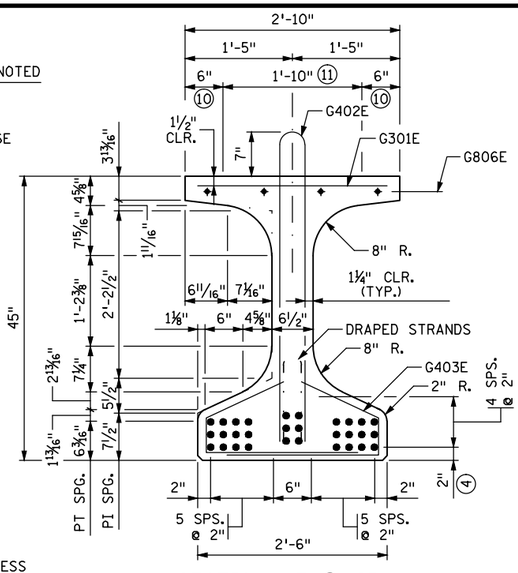

SECTION AT ℄ SPAN

Y DISTANCES (INCHES)			
	NO.	℄ SPAN	END
STRAIGHT STRANDS	24	4.0	
DRAPED STRANDS	6	5.0	40.00 □
TOTAL STRANDS	30	4.20	

Y = DISTANCE TO CENTER OF GRAVITY OF STRANDS FROM BOTTOM OF BEAM. ALL STRANDS SPACED 2" CENTER TO CENTER, HORIZONTALLY AND VERTICALLY, EXCEPT AS NOTED.

□ A TOLERANCE OF ± 1" WILL BE PERMITTED IN THIS DIMENSION.

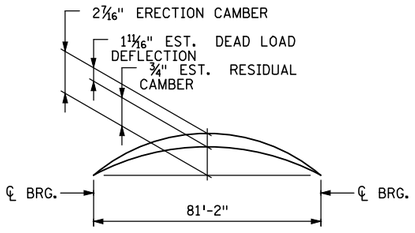

CAMBER DIAGRAM

ERECTION CAMBER SHOWN IS AFTER DIAPHRAGMS ARE IN PLACE.

DEAD LOAD DEFLECTION SHOWN IS FOR WEIGHT OF SLAB, WEARING COURSE, BARRIER, SIDEWALK AND MEDIAN WHERE APPLICABLE.

CONTRACTOR WILL TAKE ELEVATIONS AT TOP OF BEAMS AFTER ERECTION AND WILL ALLOW FOR DEFLECTION SHOWN TO ENABLE BUILDING FORMS TO CORRECT GRADE AND SPECIFIED SLAB THICKNESS. PROVIDE COPY OF ELEVATIONS TO THE ENGINEER.

CALCULATED PRESTRESS LOSSES	
ELASTIC SHORTENING LOSS	18.60 KSI
LONG TERM LOSSES	21.26 KSI
TOTAL LOSSES	39.86 KSI

MINIMUM CONCRETE STRENGTH - K.S.I.	
(1) f'ci	(2) f'c
7.0 KSI	8.0 KSI

PRESTRESSING STRAND DIAMETER	
(5)	½" □
(5)	0.60" ☒

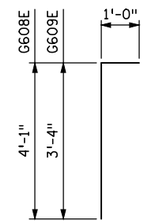

G608E & G609E

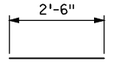

G301E

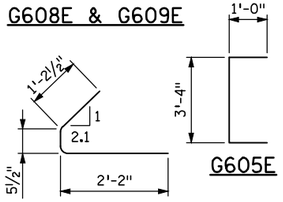

G403E

G605E

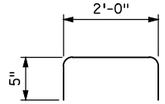

G507E

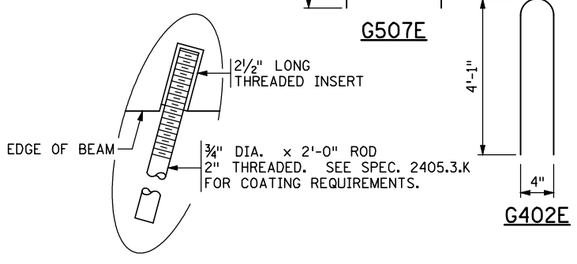

DETAIL "A"

G402E

GENERAL NOTES

PROVIDE HANDLING HOOKS OR DEVICES AS REQUIRED BY CONTRACTOR.

MARK EACH BEAM SHOWING BRIDGE NUMBER, CASTING DATE, AND INDIVIDUAL IDENTIFICATION LETTERS AND NUMBERS ON THE FACE OF THE BEAM, NEAR THE END, SO LOCATED THAT THEY WILL BE EXPOSED AFTER THE END DIAPHRAGMS HAVE BEEN CAST. MARK FASCIA BEAMS ON THE INSIDE FACE. ENSURE ALL MARKINGS ARE STENCILLED AND CLEARLY LEGIBLE. FOR LOCATION OF BEAMS, SEE FRAMING PLAN.

~~ALL MATERIAL AND WORK SHOWN OR NOTED ON THIS SHEET IS INCLUDED IN UNIT PRICE BID FOR PRESTRESSED CONCRETE BEAMS. SEE SPEC. 2405.~~

SEE FRAMING PLAN FOR BEAM END MARKED "X" AND DIAPHRAGM SPACING.

APPROXIMATE WEIGHT OF BEAM IS 30.0 TONS.

AS AN ALTERNATE TO THE END DIAPHRAGM ANCHORAGES SHOWN, THE CONTRACTOR MAY SUBMIT DETAILS OF A CAST-IN-PLACE ANCHORAGE TO THE ENGINEER FOR APPROVAL. ANCHORAGE MUST PROVIDE AN ULTIMATE PULL OUT STRENGTH OF 15 KIPS PER ANCHORAGE.

APPLY AN APPROVED SEALER TO THE SIDES OF THE BEAM NEAR EACH END PER THE SPECIAL PROVISIONS.

(1) MINIMUM CONCRETE STRENGTH AT TIME OF PRESTRESS TRANSFER.

(2) MINIMUM CONCRETE STRENGTH WHEN BEAM CAN BE TRANSPORTED AND INSTALLED.

(3) DRAPED STRANDS.

(4) STRAIGHT STRANDS.

(5) USE 7-WIRE LOW RELAXATION PRESTRESSING STRAND, CONFORMING TO ASTM A416, GRADE 270.

(6) ~~FOR INTEGRAL ABUTMENT, SOLE PLATE CAN BE ELIMINATED OR REPLACED WITH AN APPROVED PROTECTION PLATE. BEAMS DETAILED TO INCLUDE A TAPERED PLATE PER STANDARD FIGURE B309 MUST INCLUDE SOLE PLATE.~~

(7) CENTER OF GRAVITY OF HOLD DOWNS WHEN MULTIPLE HOLD DOWNS ARE USED.

(8) DIMENSION DETERMINED BY CONTRACTOR. MAINTAIN 2" MINIMUM CLEAR FROM STRANDS.

(9) TWO INSIDE BARS MAY BE PLACED ADJACENT TO VERTICAL STIRRUP FOR TYING CONVENIENCE.

(10) STEEL TROWEL TO SMOOTH FINISH AND APPLY BOND BREAKER PER APPROVED PRODUCTS LIST.

(11) ROUGH FLOAT AND BROOM TRANSVERSELY FOR BOND PER SPEC. 2405.3.D.

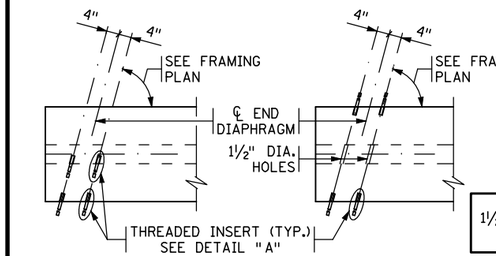

PLAN AT FASCIA BEAMS

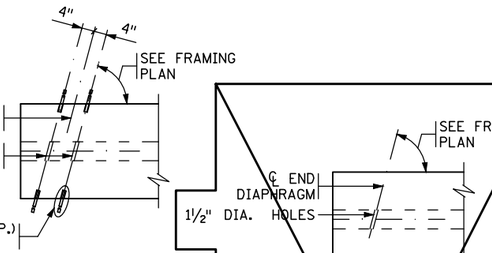

PLAN AT INTERIOR BEAMS

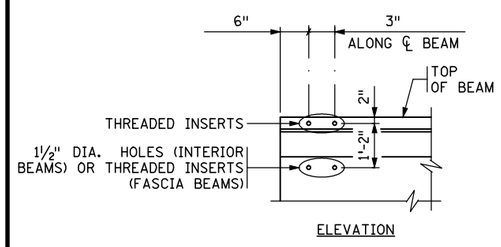

ELEVATION

CONCRETE END DIAPHRAGM

PARAPET ABUTMENT
(SEE DETAIL B814 FOR DIAPHRAGM DETAILS)

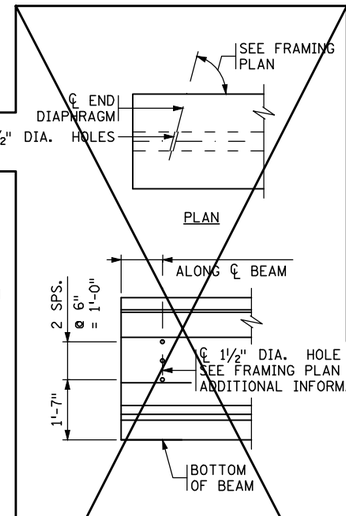

ELEVATION

CONCRETE END DIAPHRAGM

SEE SUPERSTRUCTURE DETAILS AND REINFORCEMENT FOR DIAPHRAGM DETAILS.

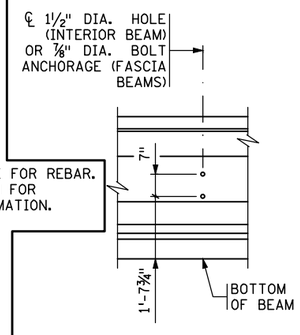

ELEVATION

STEEL INTERMEDIATE DIAPHRAGM

(SEE DETAIL B403 FOR DIAPHRAGM DETAILS)

REVISED:
APPROVED: JANUARY 13, 2015 Nancy Daubenberger STATE BRIDGE ENGINEER

CERTIFIED BY _____ LICENSED PROFESSIONAL ENGINEER — 08\28\15 DATE
NAME: ENGINEER LIC. NO. #####

TITLE: MN45" PRESTRESSED CONCRETE BEAM (PRETENSIONED) MN45-82

DES: KR	DR: MSK
CHK: KJK	CHK: KJK

APPROVED:

BEAMS 7-1 TO 7-4 — FIG. 5-397.507

SHEET NO. 75 OF 148 SHEETS

BRIDGE NO. 27C18

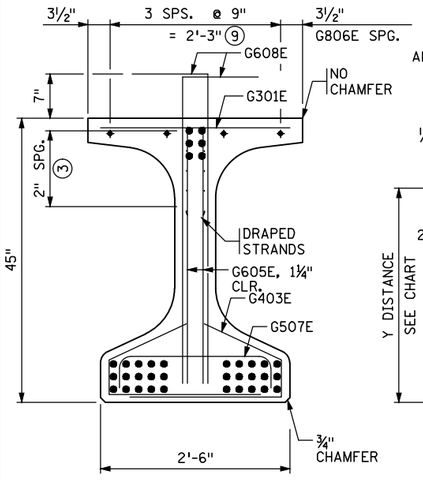

END VIEW

CUT STRANDS FLUSH WITH CONCRETE.
COVER ENDS WITH ONE COMPONENT POLYURETHANE SEALANT PER APPROVED PRODUCT LIST.
(G609E BAR NOT SHOWN)

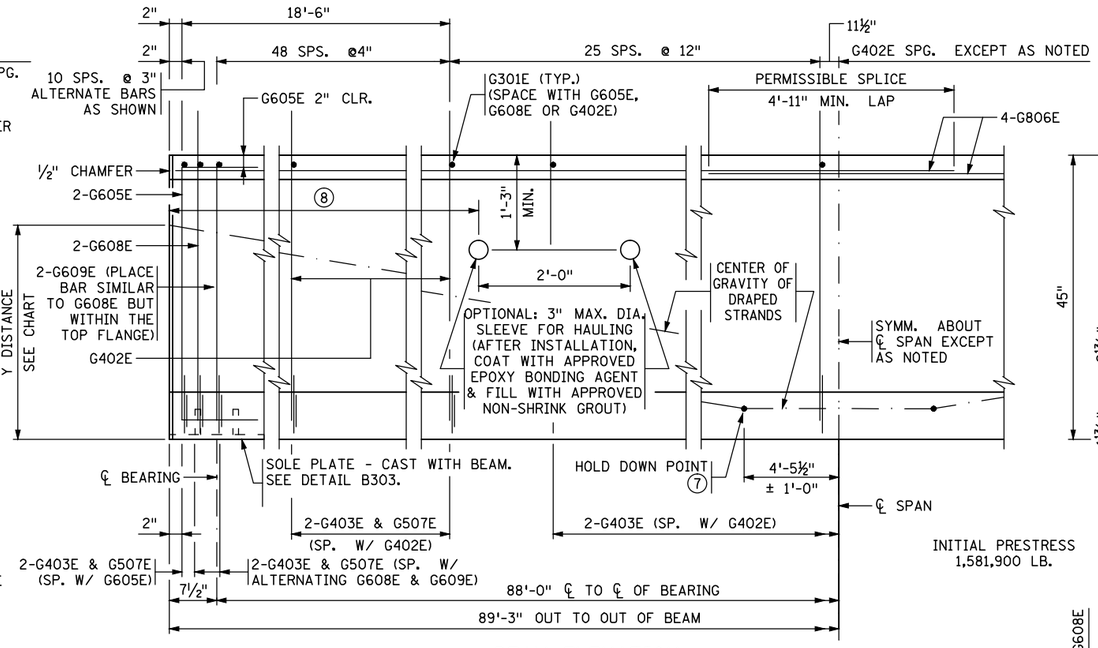

BEAM ELEVATION

INITIAL PRESTRESS
1,581,900 LB.

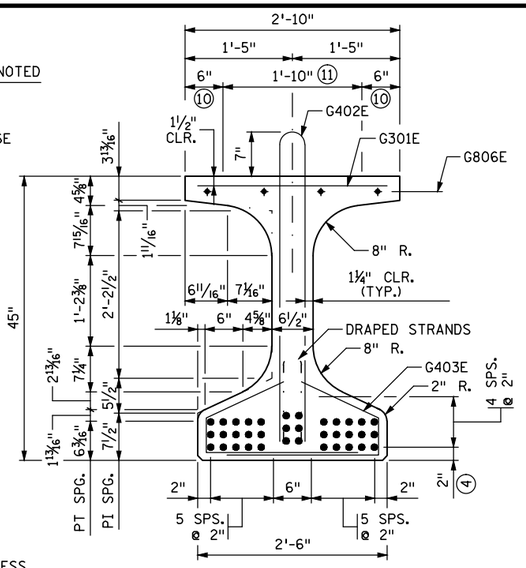

SECTION AT ℄ SPAN

Y DISTANCES (INCHES)			
	NO.	℄ SPAN	END
STRAIGHT STRANDS	30	4.0	
DRAPED STRANDS	6	5.0	40.00 □
TOTAL STRANDS	36	4.17	

Y = DISTANCE TO CENTER OF GRAVITY OF STRANDS FROM BOTTOM OF BEAM. ALL STRANDS SPACED 2" CENTER TO CENTER, HORIZONTALLY AND VERTICALLY, EXCEPT AS NOTED.

□ A TOLERANCE OF ± 1" WILL BE PERMITTED IN THIS DIMENSION.

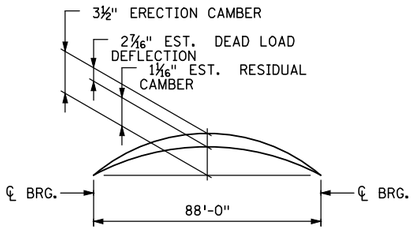

CAMBER DIAGRAM

ERECTION CAMBER SHOWN IS AFTER DIAPHRAGMS ARE IN PLACE.

DEAD LOAD DEFLECTION SHOWN IS FOR WEIGHT OF SLAB, WEARING COURSE, BARRIER, SIDEWALK AND MEDIAN WHERE APPLICABLE.

CONTRACTOR WILL TAKE ELEVATIONS AT TOP OF BEAMS AFTER ERECTION AND WILL ALLOW FOR DEFLECTION SHOWN TO ENABLE BUILDING FORMS TO CORRECT GRADE AND SPECIFIED SLAB THICKNESS. PROVIDE COPY OF ELEVATIONS TO THE ENGINEER.

CALCULATED PRESTRESS LOSSES	
ELASTIC SHORTENING LOSS	21.96 KSI
LONG TERM LOSSES	23.57 KSI
TOTAL LOSSES	45.53 KSI

MINIMUM CONCRETE STRENGTH - K.S.I.	
(1) f'ci	(2) f'c
7.0 KSI	8.0 KSI

PRESTRESSING STRAND DIAMETER	
(5)	½" □
(5)	0.60" ☒

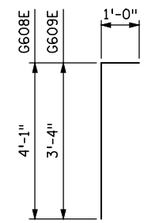

G608E & G609E

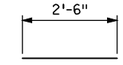

G301E

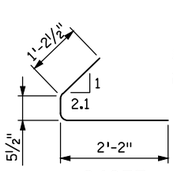

G403E

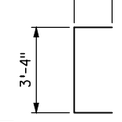

G605E

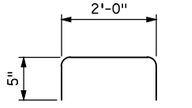

G507E

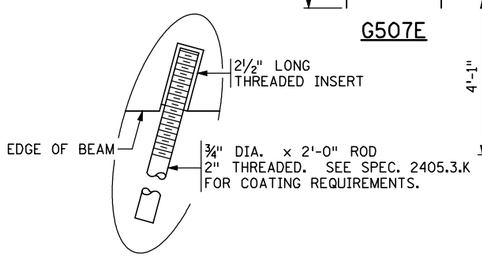

DETAIL "A"

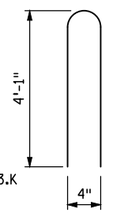

G402E

GENERAL NOTES

PROVIDE HANDLING HOOKS OR DEVICES AS REQUIRED BY CONTRACTOR.

MARK EACH BEAM SHOWING BRIDGE NUMBER, CASTING DATE, AND INDIVIDUAL IDENTIFICATION LETTERS AND NUMBERS ON THE FACE OF THE BEAM, NEAR THE END, SO LOCATED THAT THEY WILL BE EXPOSED AFTER THE END DIAPHRAGMS HAVE BEEN CAST. MARK FASCIA BEAMS ON THE INSIDE FACE. ENSURE ALL MARKINGS ARE STENCILLED AND CLEARLY LEGIBLE. FOR LOCATION OF BEAMS, SEE FRAMING PLAN.

~~ALL MATERIAL AND WORK SHOWN OR NOTED ON THIS SHEET IS INCLUDED IN UNIT PRICE BID FOR PRESTRESSED CONCRETE BEAMS. SEE SPEC. 2405.~~

SEE FRAMING PLAN FOR BEAM END MARKED "X" AND DIAPHRAGM SPACING.

APPROXIMATE WEIGHT OF BEAM IS 32.0 TONS.

AS AN ALTERNATE TO THE END DIAPHRAGM ANCHORAGES SHOWN, THE CONTRACTOR MAY SUBMIT DETAILS OF A CAST-IN-PLACE ANCHORAGE TO THE ENGINEER FOR APPROVAL. ANCHORAGE MUST PROVIDE AN ULTIMATE PULL OUT STRENGTH OF 15 KIPS PER ANCHORAGE.

APPLY AN APPROVED SEALER TO THE SIDES OF THE BEAM NEAR EACH END PER THE SPECIAL PROVISIONS.

(1) MINIMUM CONCRETE STRENGTH AT TIME OF PRESTRESS TRANSFER.

(2) MINIMUM CONCRETE STRENGTH WHEN BEAM CAN BE TRANSPORTED AND INSTALLED.

(3) DRAPED STRANDS.

(4) STRAIGHT STRANDS.

(5) USE 7-WIRE LOW RELAXATION PRESTRESSING STRAND, CONFORMING TO ASTM A416, GRADE 270.

(6) ~~FOR INTEGRAL ABUTMENT, SOLE PLATE CAN BE ELIMINATED OR REPLACED WITH AN APPROVED PROTECTION PLATE. BEAMS DETAILED TO INCLUDE A TAPERED PLATE PER STANDARD FIGURE B309 MUST INCLUDE SOLE PLATE.~~

(7) CENTER OF GRAVITY OF HOLD DOWNS WHEN MULTIPLE HOLD DOWNS ARE USED.

(8) DIMENSION DETERMINED BY CONTRACTOR. MAINTAIN 2" MINIMUM CLEAR FROM STRANDS.

(9) TWO INSIDE BARS MAY BE PLACED ADJACENT TO VERTICAL STIRRUP FOR TYING CONVENIENCE.

(10) STEEL TROWEL TO SMOOTH FINISH AND APPLY BOND BREAKER PER APPROVED PRODUCTS LIST.

(11) ROUGH FLOAT AND BROOM TRANSVERSELY FOR BOND PER SPEC. 2405.3.D.

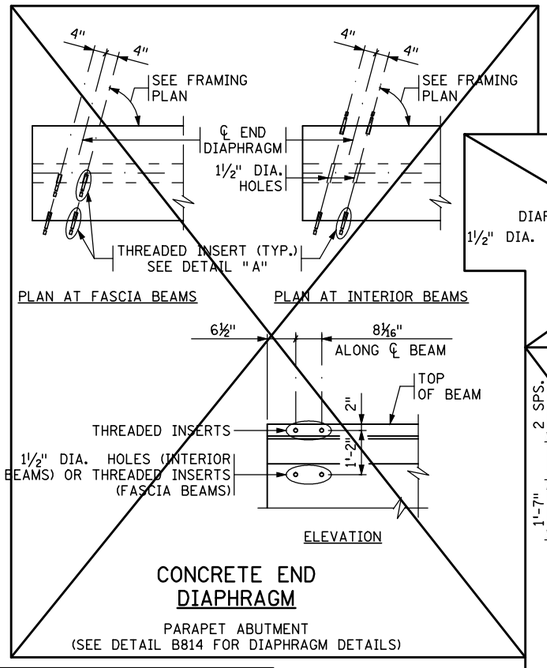

CONCRETE END DIAPHRAGM

PARAPET ABUTMENT
(SEE DETAIL B814 FOR DIAPHRAGM DETAILS)

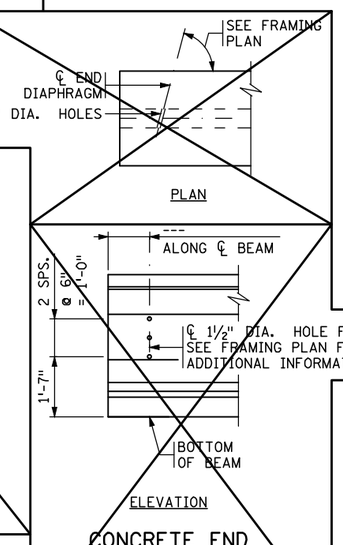

CONCRETE END DIAPHRAGM

SEE SUPERSTRUCTURE DETAILS AND REINFORCEMENT FOR DIAPHRAGM DETAILS.

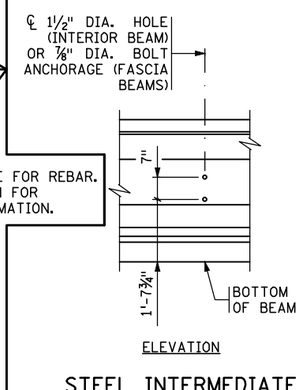

STEEL INTERMEDIATE DIAPHRAGM

(SEE DETAIL B403 FOR DIAPHRAGM DETAILS)

REVISED:

APPROVED: JANUARY 13, 2015
Nancy Dorbenberger
STATE BRIDGE ENGINEER

BEAM S 8-1 TO 8-4 & BEAMS 9-1 TO 9-4 — FIG. 5-397.507

CERTIFIED BY _____ LICENSED PROFESSIONAL ENGINEER — 08\28\15 DATE
NAME: ENGINEER LIC. NO. #####

TITLE: MN45" PRESTRESSED CONCRETE BEAM (PRETENSIONED) MN45-89

DES: KR	DR: MSK	APPROVED:	BRIDGE NO. 27C18
CHK: KJK	CHK: KJK		

SHEET NO. 76 OF 148 SHEETS

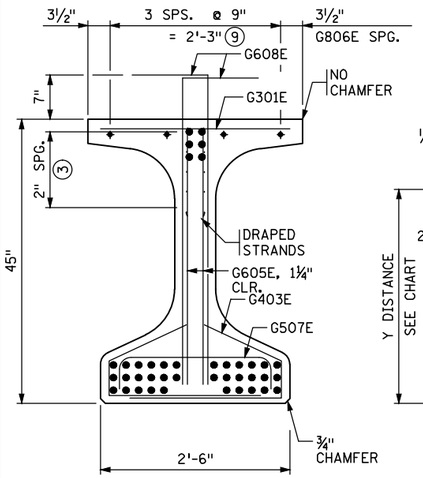

END VIEW

CUT STRANDS FLUSH WITH CONCRETE.
COVER ENDS WITH ONE COMPONENT POLYURETHANE SEALANT PER APPROVED PRODUCT LIST.
(G609E BAR NOT SHOWN)

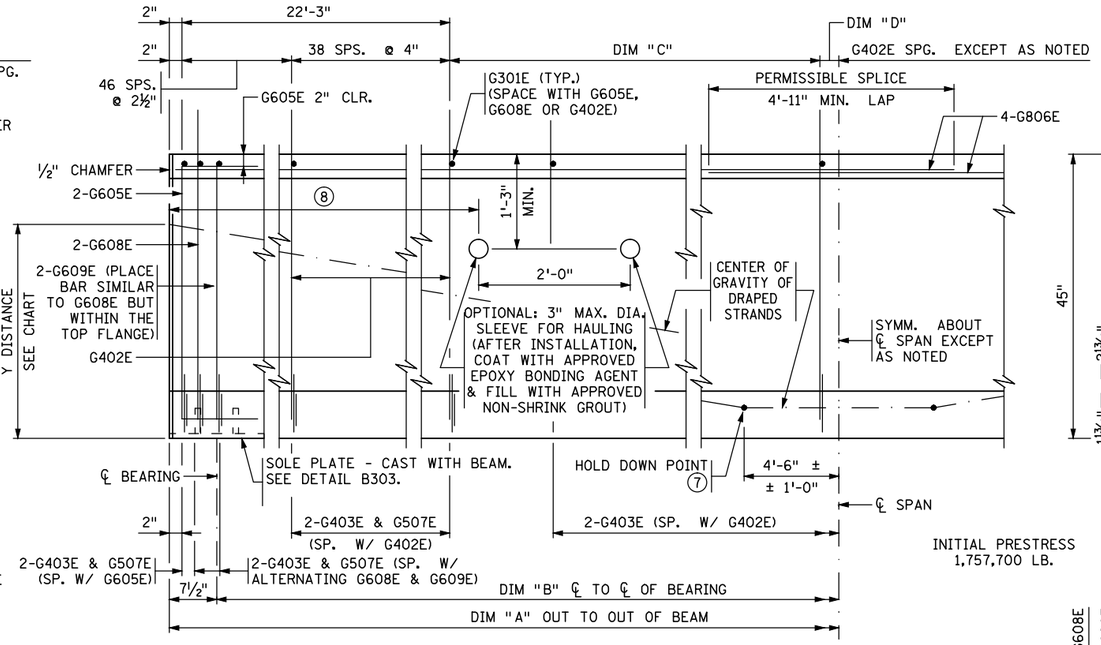

INITIAL PRESTRESS
1,757,700 LB.

BEAM ELEVATION

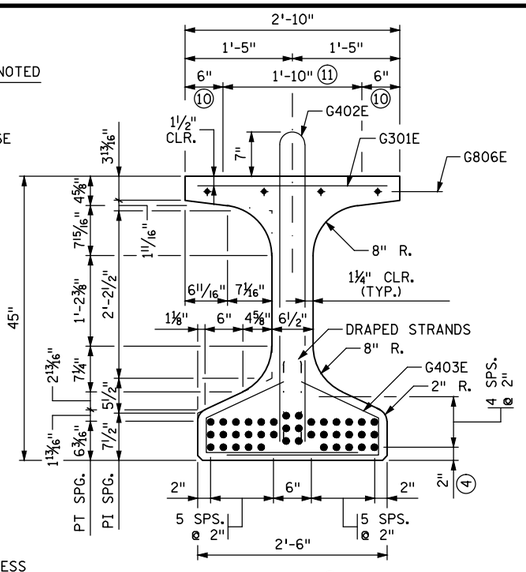

SECTION AT ℄ SPAN

Y DISTANCES (INCHES)			
	NO.	℄ SPAN	END
STRAIGHT STRANDS	34	4.12	
DRAPED STRANDS	6	5.0	
TOTAL STRANDS	40	4.25	

Y = DISTANCE TO CENTER OF GRAVITY OF STRANDS FROM BOTTOM OF BEAM. ALL STRANDS SPACED 2" CENTER TO CENTER, HORIZONTALLY AND VERTICALLY, EXCEPT AS NOTED.

□ A TOLERANCE OF ± 1" WILL BE PERMITTED IN THIS DIMENSION.

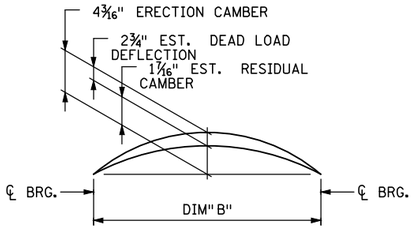

CAMBER DIAGRAM

ERECTION CAMBER SHOWN IS AFTER DIAPHRAGMS ARE IN PLACE.

DEAD LOAD DEFLECTION SHOWN IS FOR WEIGHT OF SLAB, WEARING COURSE, BARRIER, SIDEWALK AND MEDIAN WHERE APPLICABLE.

CONTRACTOR WILL TAKE ELEVATIONS AT TOP OF BEAMS AFTER ERECTION AND WILL ALLOW FOR DEFLECTION SHOWN TO ENABLE BUILDING FORMS TO CORRECT GRADE AND SPECIFIED SLAB THICKNESS. PROVIDE COPY OF ELEVATIONS TO THE ENGINEER.

BEAM ID	DIM "A"	DIM "B"	DIM "C"	DIM "D"
BM 10-1	92'-0½"	90'-9½"	23 SPA @ 12" =23'-0"	7¼"
BM 10-2	91'-3¹⁵⁄₁₆"	90'-0¹⁵⁄₁₆"	23 SPA @ 12" =23'-0"	3"
BM 10-3	90'-7⁵⁄₁₆"	89'-4⁵⁄₁₆"	22 SPA @ 12" =22'-0"	10⅝"
BM 10-4	89'-10¾"	88'-7¾"	22 SPA @ 12" =22'-0"	6⅜"

CALCULATED PRESTRESS LOSSES	
ELASTIC SHORTENING LOSS	24.18 KSI
LONG TERM LOSSES	25.12 KSI
TOTAL LOSSES	49.30 KSI

MINIMUM CONCRETE STRENGTH - K.S.I.	
(1) f'ci	(2) f'c
7.0 KSI	8.0 KSI

PRESTRESSING STRAND DIAMETER	
(5)	½" □
(5)	0.60" ☒

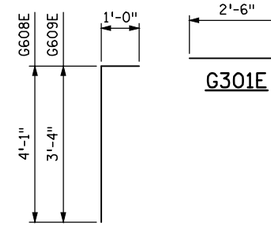

G608E & G609E

G301E

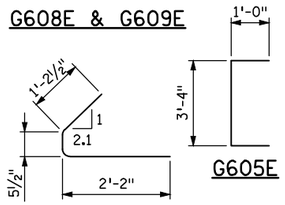

G403E

G605E

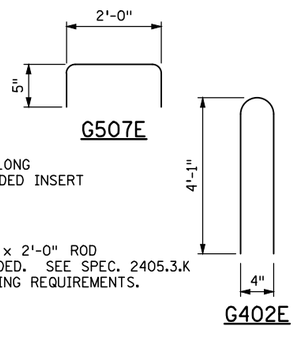

G507E

G402E

DETAIL "A"

GENERAL NOTES

PROVIDE HANDLING HOOKS OR DEVICES AS REQUIRED BY CONTRACTOR.

MARK EACH BEAM SHOWING BRIDGE NUMBER, CASTING DATE, AND INDIVIDUAL IDENTIFICATION LETTERS AND NUMBERS ON THE FACE OF THE BEAM, NEAR THE END, SO LOCATED THAT THEY WILL BE EXPOSED AFTER THE END DIAPHRAGMS HAVE BEEN CAST. MARK FASCIA BEAMS ON THE INSIDE FACE. ENSURE ALL MARKINGS ARE STENCILLED AND CLEARLY LEGIBLE. FOR LOCATION OF BEAMS, SEE FRAMING PLAN.

~~ALL MATERIAL AND WORK SHOWN OR NOTED ON THIS SHEET IS INCLUDED IN UNIT PRICE BID FOR PRESTRESSED CONCRETE BEAMS. SEE SPEC. 2405.~~

SEE FRAMING PLAN FOR BEAM END MARKED "X" AND DIAPHRAGM SPACING.

APPROXIMATE WEIGHT OF BEAM IS 33.0 TONS.

AS AN ALTERNATE TO THE END DIAPHRAGM ANCHORAGES SHOWN, THE CONTRACTOR MAY SUBMIT DETAILS OF A CAST-IN-PLACE ANCHORAGE TO THE ENGINEER FOR APPROVAL. ANCHORAGE MUST PROVIDE AN ULTIMATE PULL OUT STRENGTH OF 15 KIPS PER ANCHORAGE.

APPLY AN APPROVED SEALER TO THE SIDES OF THE BEAM NEAR EACH END PER THE SPECIAL PROVISIONS.

(1) MINIMUM CONCRETE STRENGTH AT TIME OF PRESTRESS TRANSFER.

(2) MINIMUM CONCRETE STRENGTH WHEN BEAM CAN BE TRANSPORTED AND INSTALLED.

(3) DRAPED STRANDS.

(4) STRAIGHT STRANDS.

(5) USE 7-WIRE LOW RELAXATION PRESTRESSING STRAND, CONFORMING TO ASTM A416, GRADE 270.

(6) ~~FOR INTEGRAL ABUTMENT, SOLE PLATE CAN BE ELIMINATED OR REPLACED WITH AN APPROVED PROTECTION PLATE. BEAMS DETAILED TO INCLUDE A TAPERED PLATE PER STANDARD FIGURE B309 MUST INCLUDE SOLE PLATE.~~

(7) CENTER OF GRAVITY OF HOLD DOWNS WHEN MULTIPLE HOLD DOWNS ARE USED.

(8) DIMENSION DETERMINED BY CONTRACTOR. MAINTAIN 2" MINIMUM CLEAR FROM STRANDS.

(9) TWO INSIDE BARS MAY BE PLACED ADJACENT TO VERTICAL STIRRUP FOR TYING CONVENIENCE.

(10) STEEL TROWEL TO SMOOTH FINISH AND APPLY BOND BREAKER PER APPROVED PRODUCTS LIST.

(11) ROUGH FLOAT AND BROOM TRANSVERSELY FOR BOND PER SPEC. 2405.3.D.

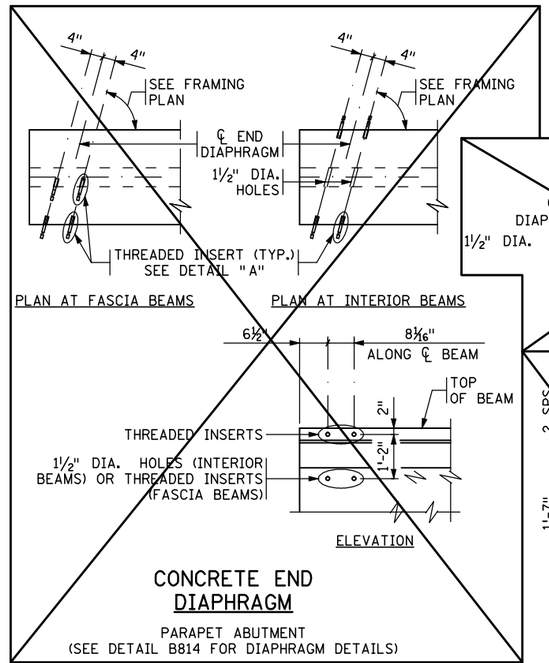

CONCRETE END DIAPHRAGM

PARAPET ABUTMENT
(SEE DETAIL B814 FOR DIAPHRAGM DETAILS)

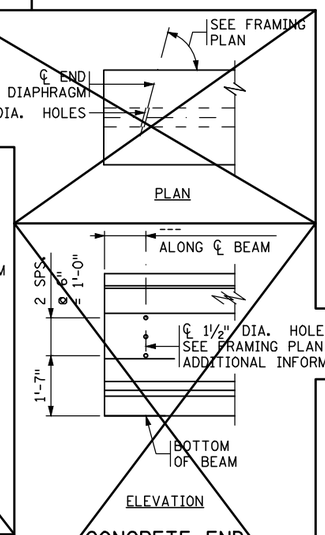

CONCRETE END DIAPHRAGM

SEE SUPERSTRUCTURE DETAILS AND REINFORCEMENT FOR DIAPHRAGM DETAILS.

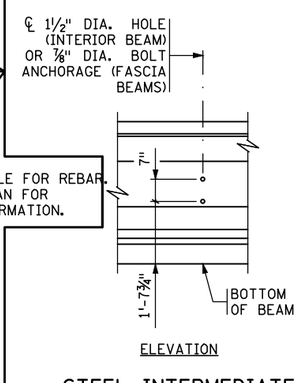

STEEL INTERMEDIATE DIAPHRAGM

(SEE DETAIL B403 FOR DIAPHRAGM DETAILS)

REVISED:

APPROVED: JANUARY 13, 2015
Nancy Daubenberger
STATE BRIDGE ENGINEER

CERTIFIED BY _____ LICENSED PROFESSIONAL ENGINEER — 08\28\15 DATE
NAME: ENGINEER LIC. NO. #####

TITLE: MN45" PRESTRESSED CONCRETE BEAM (PRETENSIONED) MN45-92

DES: KR | DR: MSK | APPROVED:
CHK: KJK | CHK: KJK

BEAMS 10-1 TO 10-4 | FIG. 5-397.507

SHEET NO. 77 OF 148 SHEETS | BRIDGE NO. 27C18

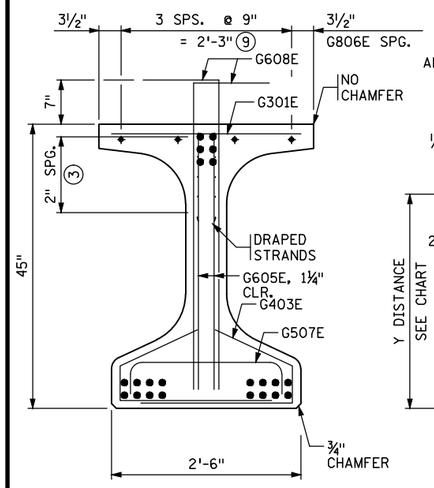

END VIEW

CUT STRANDS FLUSH WITH CONCRETE.
COVER ENDS WITH ONE COMPONENT POLYURETHANE SEALANT PER APPROVED PRODUCT LIST.
(G609E BAR NOT SHOWN)

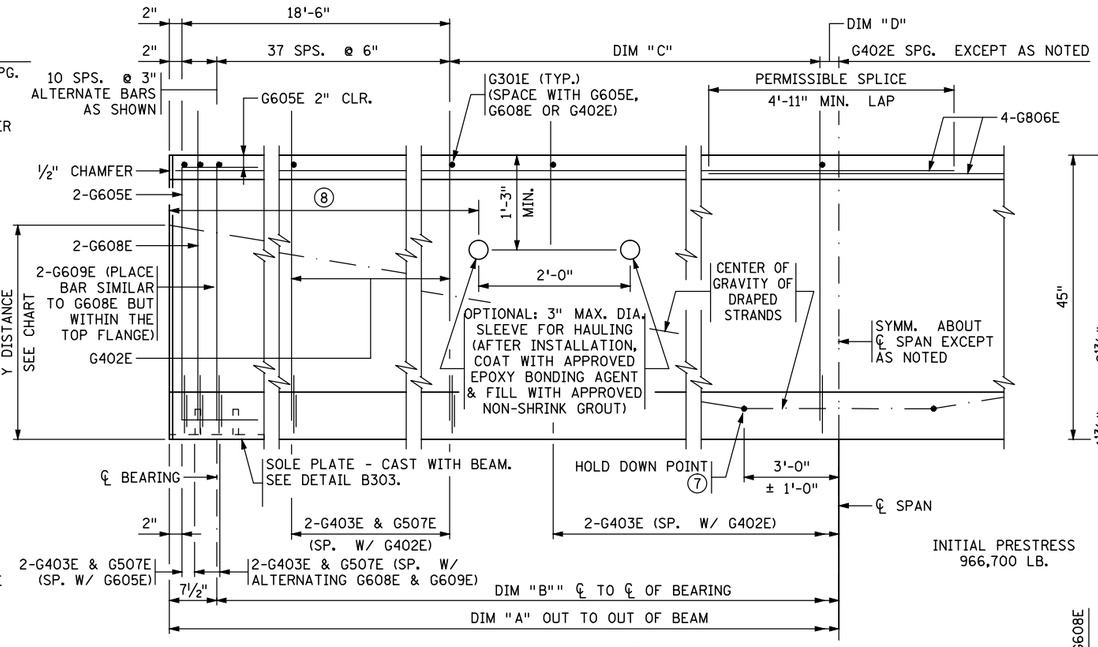

INITIAL PRESTRESS
966,700 LB.

BEAM ELEVATION

BEAM ID	DIM "A"	DIM "B"	DIM "C"	DIM "D"
BM 11-1	62'-10⅛"	61'-7⅛"	12 SPA @ 12" =12'-0"	9"
BM 11-2	61'-4¾"	60'-1¾"	11 SPA @ 12" =11'-0"	12⅜"
BM 11-3	59'-11⅜"	58'-8⅜"	11 SPA @ 12" =11'-0"	3¾"
BM 11-4	58'-6"	57'-3⅜"	10 SPA @ 12" =10'-0"	7"

CALCULATED PRESTRESS LOSSES	
ELASTIC SHORTENING LOSS	15.25 KSI
LONG TERM LOSSES	18.17 KSI
TOTAL LOSSES	33.42 KSI

MINIMUM CONCRETE STRENGTH - K.S.I.	
(1) f'ci	(2) f'c
7.0 KSI	8.0 KSI

PRESTRESSING STRAND DIAMETER	
(5)	½" ☐
(5)	0.60" ☒

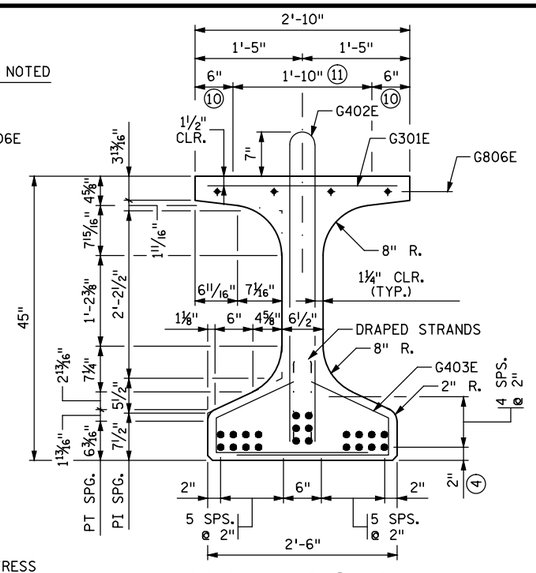

SECTION AT ℄ SPAN

Y DISTANCES (INCHES)			
	NO.	℄ SPAN	END
STRAIGHT STRANDS	16	3.0	
DRAPED STRANDS	6	5.0	40.00 ▫
TOTAL STRANDS	22	3.55	

Y = DISTANCE TO CENTER OF GRAVITY OF STRANDS FROM BOTTOM OF BEAM. ALL STRANDS SPACED 2" CENTER TO CENTER, HORIZONTALLY AND VERTICALLY, EXCEPT AS NOTED.

▫ A TOLERANCE OF ± 1" WILL BE PERMITTED IN THIS DIMENSION.

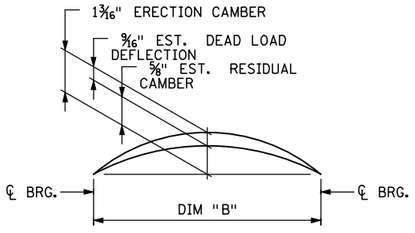

CAMBER DIAGRAM

ERECTION CAMBER SHOWN IS AFTER DIAPHRAGMS ARE IN PLACE.

DEAD LOAD DEFLECTION SHOWN IS FOR WEIGHT OF SLAB, WEARING COURSE, BARRIER, SIDEWALK AND MEDIAN WHERE APPLICABLE.

CONTRACTOR WILL TAKE ELEVATIONS AT TOP OF BEAMS AFTER ERECTION AND WILL ALLOW FOR DEFLECTION SHOWN TO ENABLE BUILDING FORMS TO CORRECT GRADE AND SPECIFIED SLAB THICKNESS. PROVIDE COPY OF ELEVATIONS TO THE ENGINEER.

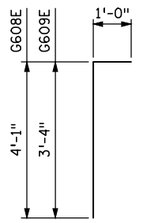

G608E & G609E

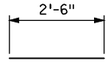

G301E

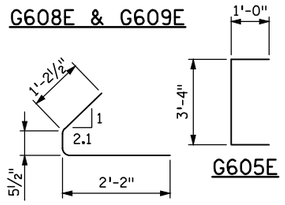

G403E

G605E

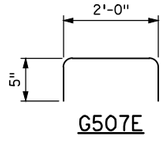

G507E

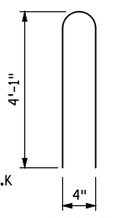

G402E

GENERAL NOTES

PROVIDE HANDLING HOOKS OR DEVICES AS REQUIRED BY CONTRACTOR.

MARK EACH BEAM SHOWING BRIDGE NUMBER, CASTING DATE, AND INDIVIDUAL IDENTIFICATION LETTERS AND NUMBERS ON THE FACE OF THE BEAM, NEAR THE END, SO LOCATED THAT THEY WILL BE EXPOSED AFTER THE END DIAPHRAGMS HAVE BEEN CAST. MARK FASCIA BEAMS ON THE INSIDE FACE. ENSURE ALL MARKINGS ARE STENCILLED AND CLEARLY LEGIBLE. FOR LOCATION OF BEAMS, SEE FRAMING PLAN.

~~ALL MATERIAL AND WORK SHOWN OR NOTED ON THIS SHEET IS INCLUDED IN UNIT PRICE BID FOR PRESTRESSED CONCRETE BEAMS. SEE SPEC. 2405.~~

SEE FRAMING PLAN FOR BEAM END MARKED "X" AND DIAPHRAGM SPACING.

APPROXIMATE WEIGHT OF BEAM IS 23.0 TONS.

AS AN ALTERNATE TO THE END DIAPHRAGM ANCHORAGES SHOWN, THE CONTRACTOR MAY SUBMIT DETAILS OF A CAST-IN-PLACE ANCHORAGE TO THE ENGINEER FOR APPROVAL. ANCHORAGE MUST PROVIDE AN ULTIMATE PULL OUT STRENGTH OF 15 KIPS PER ANCHORAGE.

APPLY AN APPROVED SEALER TO THE SIDES OF THE BEAM NEAR EACH END PER THE SPECIAL PROVISIONS.

(1) MINIMUM CONCRETE STRENGTH AT TIME OF PRESTRESS TRANSFER.

(2) MINIMUM CONCRETE STRENGTH WHEN BEAM CAN BE TRANSPORTED AND INSTALLED.

(3) DRAPED STRANDS.

(4) STRAIGHT STRANDS.

(5) USE 7-WIRE LOW RELAXATION PRESTRESSING STRAND, CONFORMING TO ASTM A416, GRADE 270.

(6) ~~FOR INTEGRAL ABUTMENT, SOLE PLATE CAN BE ELIMINATED OR REPLACED WITH AN APPROVED PROTECTION PLATE. BEAMS DETAILED TO INCLUDE A TAPERED PLATE PER STANDARD FIGURE B309 MUST INCLUDE SOLE PLATE.~~

(7) CENTER OF GRAVITY OF HOLD DOWNS WHEN MULTIPLE HOLD DOWNS ARE USED.

(8) DIMENSION DETERMINED BY CONTRACTOR. MAINTAIN 2" MINIMUM CLEAR FROM STRANDS.

(9) TWO INSIDE BARS MAY BE PLACED ADJACENT TO VERTICAL STIRRUP FOR TYING CONVENIENCE.

(10) STEEL TROWEL TO SMOOTH FINISH AND APPLY BOND BREAKER PER APPROVED PRODUCTS LIST.

(11) ROUGH FLOAT AND BROOM TRANSVERSELY FOR BOND PER SPEC. 2405.3.D.

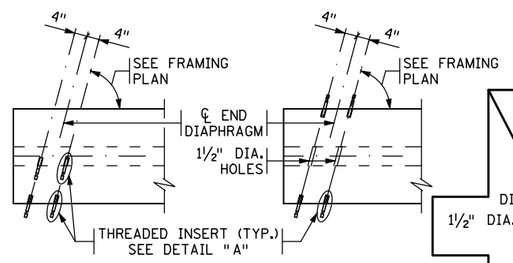

PLAN AT FASCIA BEAMS

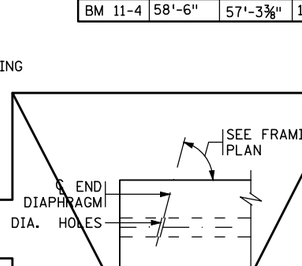

PLAN AT INTERIOR BEAMS

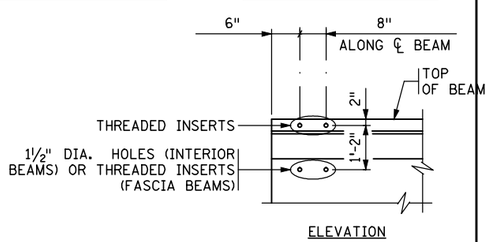

ELEVATION

CONCRETE END DIAPHRAGM

PARAPET ABUTMENT
(SEE DETAIL B814 FOR DIAPHRAGM DETAILS)

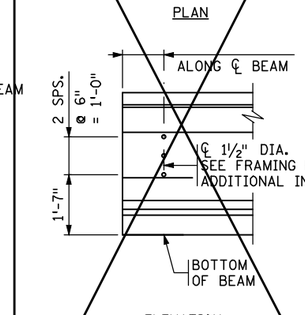

ELEVATION

CONCRETE END DIAPHRAGM

SEE SUPERSTRUCTURE DETAILS AND REINFORCEMENT FOR DIAPHRAGM DETAILS.

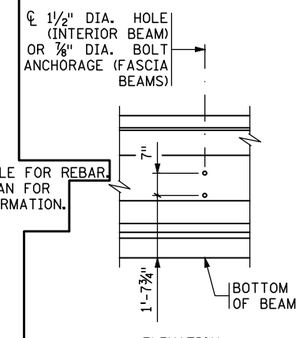

ELEVATION

STEEL INTERMEDIATE DIAPHRAGM

(SEE DETAIL B403 FOR DIAPHRAGM DETAILS)

DETAIL "A"

REVISED:

APPROVED: JANUARY 13, 2015
Nancy Daubenberger
STATE BRIDGE ENGINEER

CERTIFIED BY _____ LICENSED PROFESSIONAL ENGINEER
08\28\15 DATE
NAME: ENGINEER LIC. NO. #####

TITLE: MN45" PRESTRESSED CONCRETE BEAM (PRETENSIONED) MN45-62

DES: KR	DR: MSK	APPROVED:
CHK: KJK	CHK: KJK	

SHEET NO. 78 OF 148 SHEETS

BEAMS 11-1 TO 11-4 FIG. 5-397.507

BRIDGE NO. 27C18

Jan. 18 2016 02:55 pm V:\3400_ADC\CAD\SEGMENT E4\PLAN SHEETS\STRUCTURES\27C18\CBR27C18-BRG-PCB-005.dwg By: Victor.Madrid

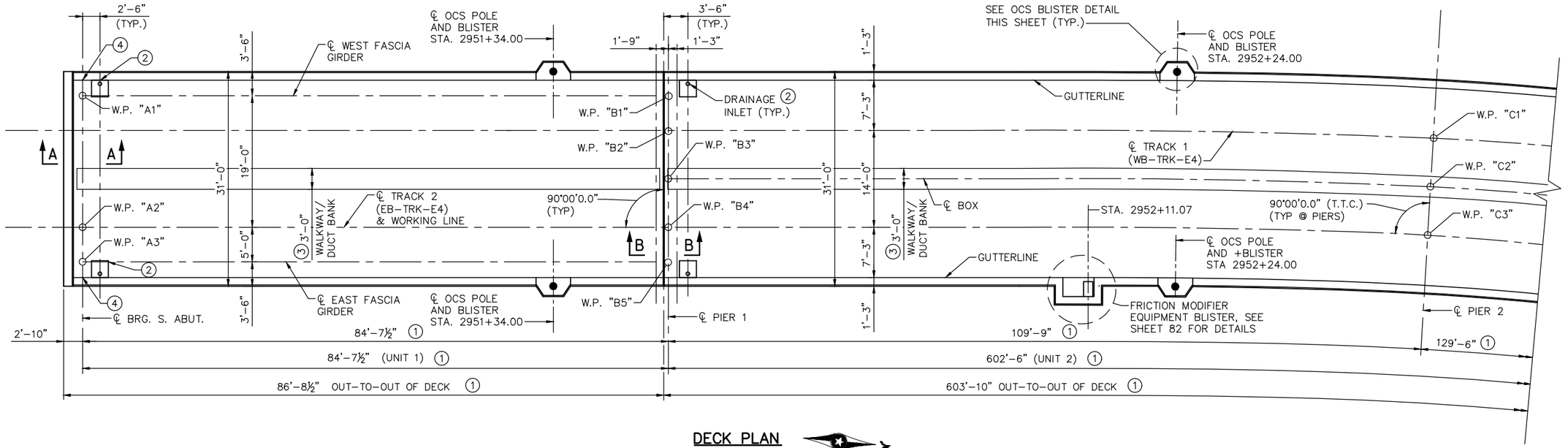

DECK PLAN
(SPANS 1-2)

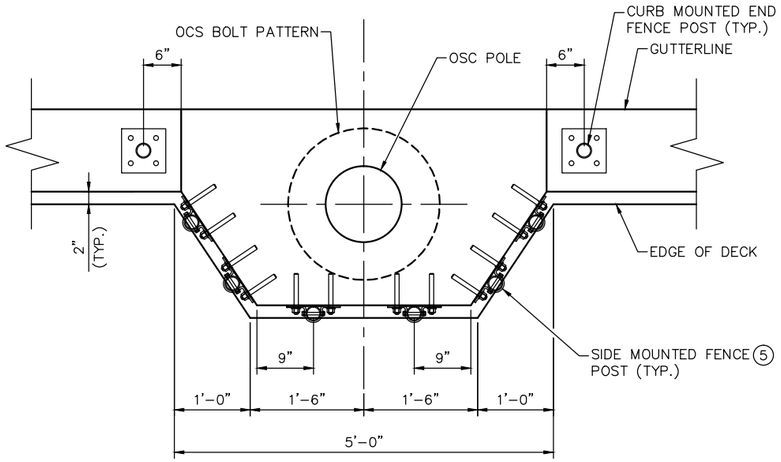

OCS BLISTER AT CURB
(UNITS 1 & 2)
TYPE 1/2

NOTES:

SEE SHEET 86 FOR SECTION A-A & B-B

(1) DIMENSIONS MEASURED ALONG ℄ TRACK 2.

(2) SEE SHEETS 119-121 FOR DECK DRAIN DETAILS.

(3) SEE SHEETS 103 & 104 FOR WALKWAY/DUCT BANK DETAILS.

(4) STRAY CURRENT TEST STATION. SEE STRAY CURRENT NOTE 8 ON SHEET 6.

(5) SEE SHEET 114 FOR OCS BLISTER FENCE DETAILS.

NO.	DATE	BY	CHECK	DESIGN	REVISION / SUBMITTAL

DESIGNED BY: KR | CHECKED BY: KJK
DRAWN BY: MSK | CHECKED BY: KJK

AECOM Kimley»Horn

90% SUBMISSION - 01/22/16

METROPOLITAN COUNCIL

SOUTHWEST Green Line LRT Extension

CIVIL - VOLUME 4G
5TH AVENUE AND 7TH STREET
BRIDGE 27C18
SUPERSTRUCTURE DETAILS 1

DISCIPLINE: STRUCTURES
SHEET NAME: CBR27C18-BRG-SUP-001

SHEET 79 OF 148

Jan, 18 2016 02:55 pm V:\3400_ADC\CAD\SEGMENT E4\PLAN SHEETS\STRUCTURES\27C18\CBR27C18-BRG-SUP-001.dwg By: Victor.Madrid

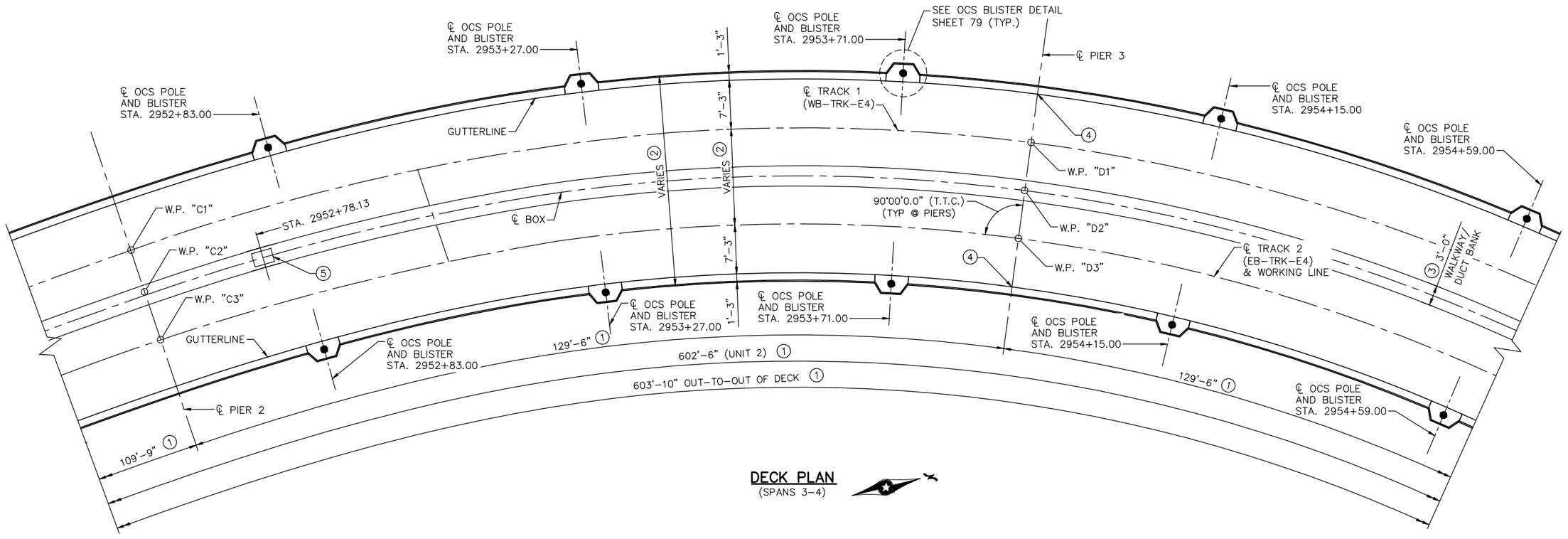

DECK PLAN
(SPANS 3-4)

NOTES:

(1) DIMENSIONS MEASURED ALONG ℄ TRACK 2.

(2) 14'-0": STA. 2951+50.38 TO STA. 2952+01.07

TRANSITION 14'-0" TO 16'-0": STA. 2952+01.07 TO STA. 2957+37.39

16'-0": STA 2957+37.39 TO 2957+52.88

(3) SEE SHEETS 103 & 104 FOR WALKWAY/DUCT BANK DETAILS.

(4) STRAY CURRENT TEST STATION. SEE STRAY CURRENT NOTE 10 ON SHEET 6.

(5) DUCT BANK HANDHOLE, SEE SHEETS 103 & 104 FOR DETAILS.

NO.	DATE	BY	CHECK	DESIGN	REVISION / SUBMITTAL

DESIGNED BY: KR | CHECKED BY: KJK
DRAWN BY: MSK | CHECKED BY: KJK

AECOM Kimley»Horn

90% SUBMISSION - 01/22/16

METROPOLITAN COUNCIL

SOUTHWEST Green Line LRT Extension

CIVIL - VOLUME 4G
5TH AVENUE AND 7TH STREET
BRIDGE 27C18
SUPERSTRUCTURE DETAILS 2

DISCIPLINE: STRUCTURES
SHEET NAME: CBR27C18-BRG-SUP-002

SHEET 80 OF 148

Jan, 18 2016 02:56 pm V:\3400_ADC\CAD\SEGMENT E4\PLAN SHEETS\STRUCTURES\27C18\CBR27C18-BRG-SUP-002.dwg By: Victor.Madrid

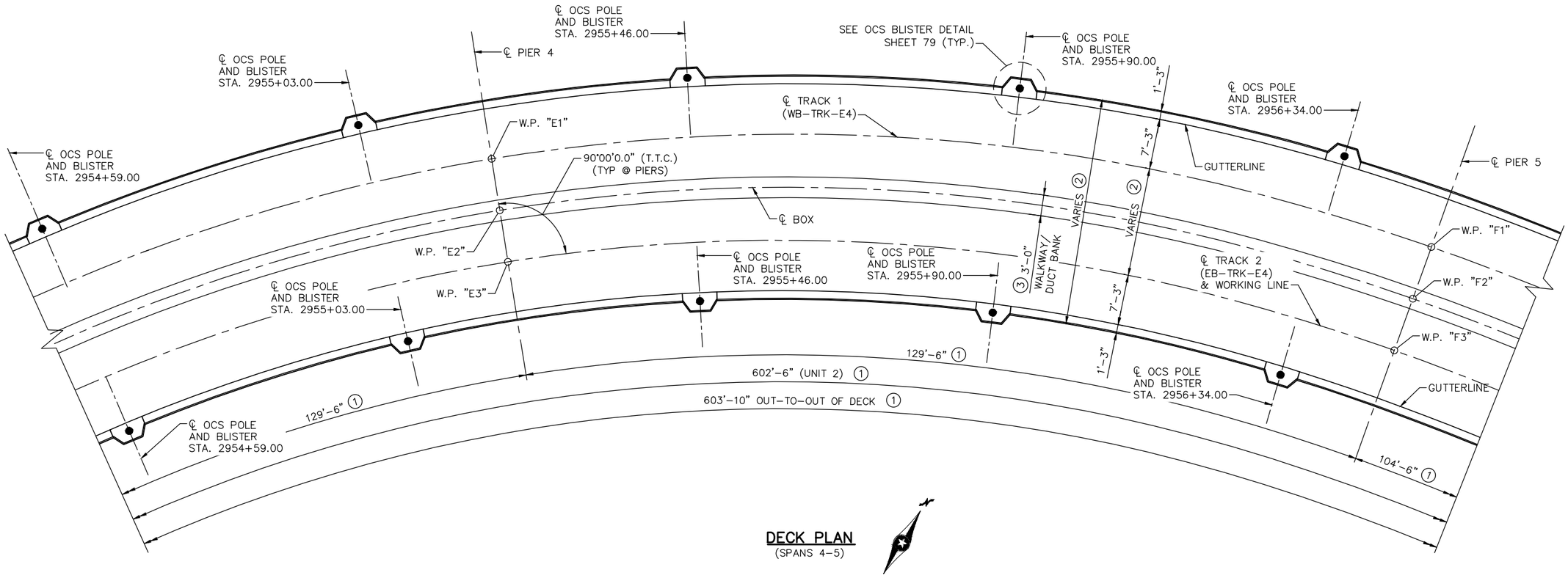

DECK PLAN
(SPANS 4–5)

NOTES:

(1) DIMENSIONS MEASURED ALONG ℄ TRACK 2.

(2) 14'–0": STA. 2951+50.38 TO STA. 2952+01.07

TRANSITION 14'–0" TO 16'–0": STA. 2952+01.07 TO STA. 2957+37.39

16'–0": STA 2957+37.39 TO 2957+52.88

(3) SEE SHEETS 103 & 104 FOR WALKWAY/DUCT BANK DETAILS.

NO.	DATE	BY	CHECK	DESIGN	REVISION / SUBMITTAL

DESIGNED BY: KR | CHECKED BY: KJK
DRAWN BY: MSK | CHECKED BY: KJK

AECOM Kimley»Horn

90% SUBMISSION - 01/22/16

METROPOLITAN COUNCIL

SOUTHWEST Green Line LRT Extension

CIVIL - VOLUME 4G
5TH AVENUE AND 7TH STREET
BRIDGE 27C18
SUPERSTRUCTURE DETAILS 3

DISCIPLINE: STRUCTURES
SHEET NAME: CBR27C18-BRG-SUP-003

SHEET 81 OF 148

Jan, 18 2016 02:56 pm V:\3400_ADC\CAD\SEGMENT E4\PLAN SHEETS\STRUCTURES\27C18\CBR27C18-BRG-SUP-003.dwg By: Victor.Madrid

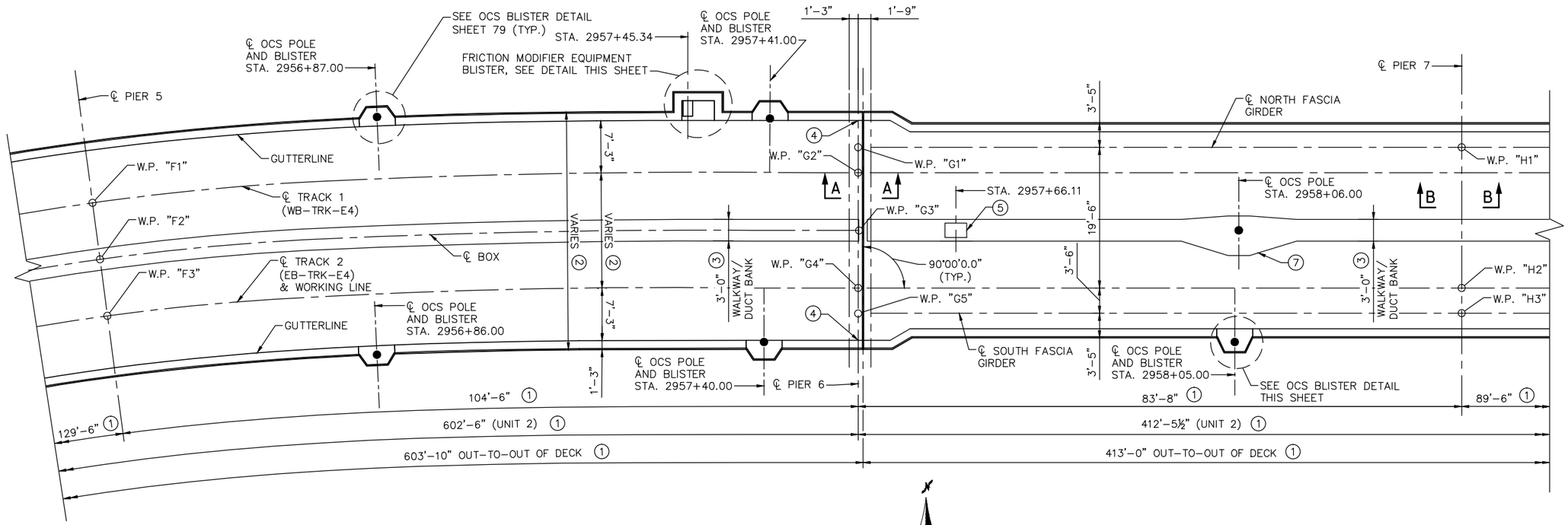

DECK PLAN
(SPANS 6-7)

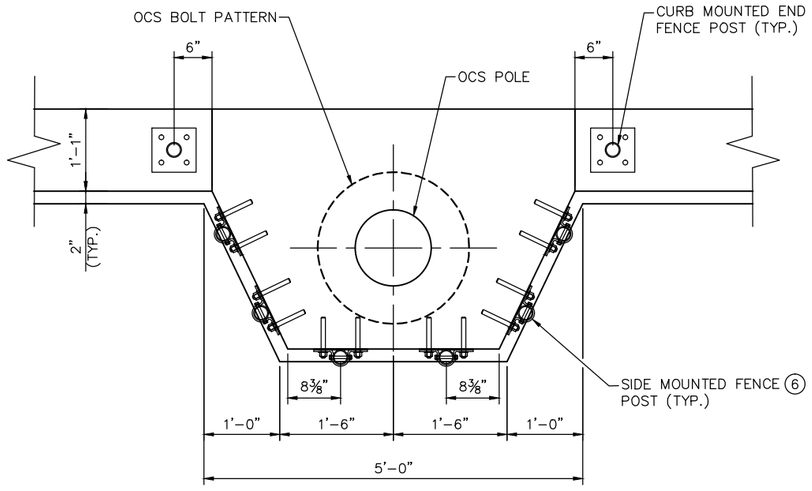

OCS BLISTER AT CURB
(UNIT 3)

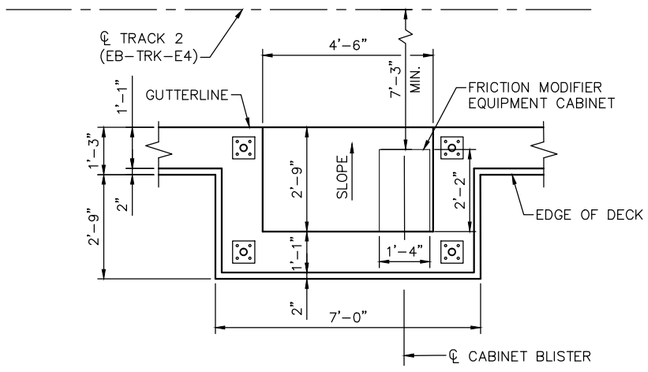

FRICTION MODIFIER BLISTER AT CURB

NOTES:

SEE SHEET 97 FOR SECTION A-A.

SEE SHEET 97 FOR SECTION B-B.

(1) DIMENSIONS MEASURED ALONG ℄ TRACK 2.

(2) 14'-0": STA. 2951+50.38 TO STA. 2952+01.07

TRANSITION 14'-0" TO 16'-0": STA. 2952+01.07 TO STA. 2957+37.39

16'-0": STA 2957+37.39 TO 2957+52.88

(3) SEE SHEETS 103 & 104 FOR WALKWAY/DUCT BANK DETAILS.

(4) STRAY CURRENT TEST STATION. SEE STRAY CURRENT NOTE 11 ON SHEET 6.

(5) DUCT BANK HANDHOLE, SEE SHEETS 103 & 104 FOR DETAILS.

(6) SEE SHEET 114 FOR OCS BLISTER FENCE DETAILS.

(7) SEE SHEET 103 FOR WALKWAY TAPER DETAILS.

NO.	DATE	BY	CHECK	DESIGN	REVISION / SUBMITTAL

DESIGNED BY: KR CHECKED BY: KJK
DRAWN BY: MSK CHECKED BY: KJK

AECOM Kimley»Horn

90% SUBMISSION - 01/22/16

METROPOLITAN COUNCIL

SOUTHWEST Green Line LRT Extension

CIVIL - VOLUME 4G
5TH AVENUE AND 7TH STREET
BRIDGE 27C18
SUPERSTRUCTURE DETAILS 4

DISCIPLINE: STRUCTURES
SHEET NAME: CBR27C18-BRG-SUP-004

SHEET 82 OF 148

Jan, 18 2016 02:57 pm v:\3400_ADC\CAD\SEGMENT E4\PLAN SHEETS\STRUCTURES\27C18\CBR27C18-BRG-SUP-004.dwg By: Victor.Madrid

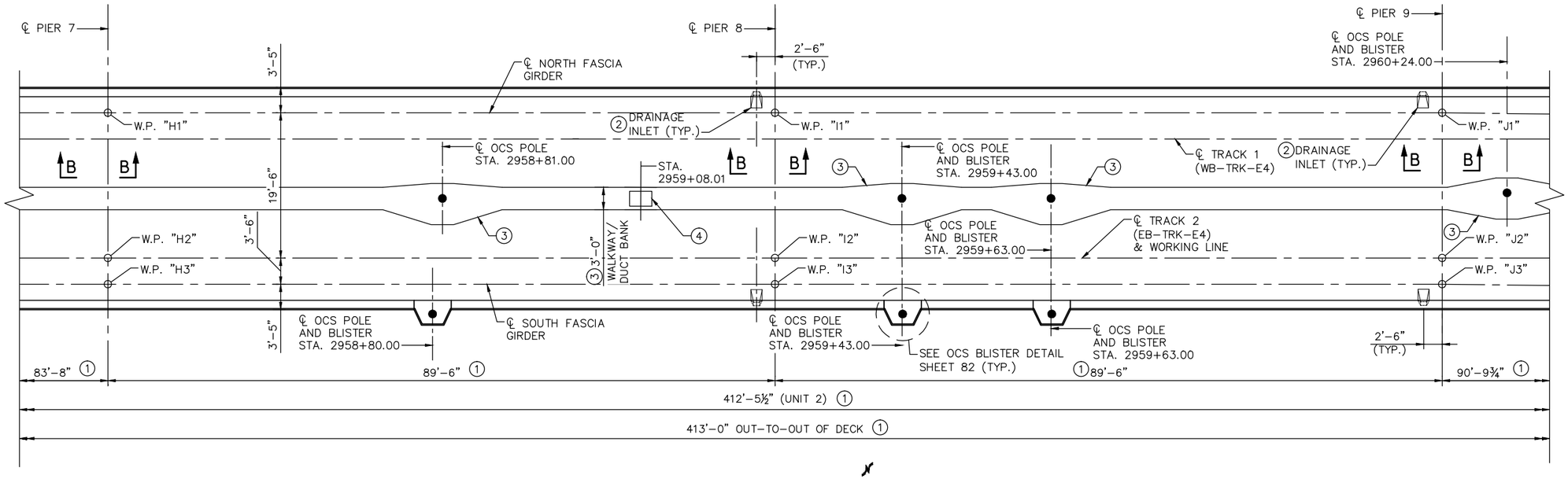

DECK PLAN
(SPANS 8–9)

NOTES:

SEE SHEET 97 FOR SECTION B–B.

1. DIMENSIONS MEASURED ALONG ℄ TRACK 2.
2. SEE SHEETS 119–121 FOR DECK DRAIN DETAILS.
3. SEE SHEETS 103 & 104 FOR WALKWAY/DUCT BANK DETAILS.
4. DUCT BANK HANDHOLE, SEE SHEETS 103 & 104 FOR DETAILS.

NO.	DATE	BY	CHECK	DESIGN	REVISION / SUBMITTAL

DESIGNED BY: KR | CHECKED BY: KJK
DRAWN BY: MSK | CHECKED BY: KJK

AECOM Kimley»Horn

90% SUBMISSION - 01/22/16

METROPOLITAN COUNCIL

SOUTHWEST Green Line LRT Extension

CIVIL - VOLUME 4G
5TH AVENUE AND 7TH STREET
BRIDGE 27C18
SUPERSTRUCTURE DETAILS 5

DISCIPLINE: STRUCTURES
SHEET NAME: CBR27C18-BRG-SUP-005

SHEET 83 OF 148

Jan, 18 2016 02:57 pm V:\3400_ADC\CAD\SEGMENT E4\PLAN SHEETS\STRUCTURES\27C18\CBR27C18-BRG-SUP-005.dwg By: Victor.Madrid

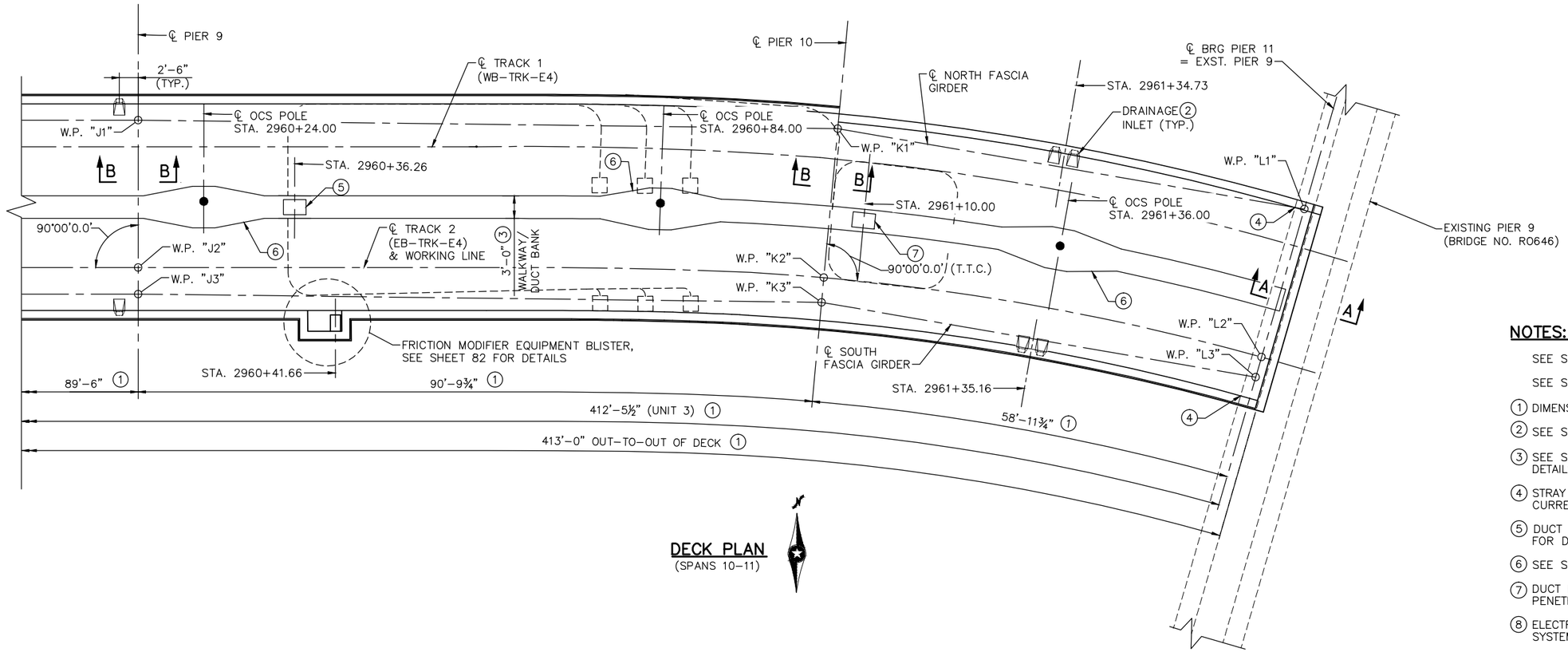

DECK PLAN
(SPANS 10–11)

NOTES:

SEE SHEET 97 FOR SECTION B–B.

SEE SHEET 99 FOR SECTION A–A.

(1) DIMENSIONS MEASURED ALONG ℄ TRACK 2.

(2) SEE SHEETS 119–121 FOR DECK DRAIN DETAILS.

(3) SEE SHEETS 103 & 104 FOR WALKWAY/DUCT BANK DETAILS.

(4) STRAY CURRENT TEST STATION. SEE STRAY CURRENT NOTE 12 ON SHEET 6.

(5) DUCT BANK HANDHOLE, SEE SHEETS 103 & 104 FOR DETAILS.

(6) SEE SHEET 103 FOR WALKWAY TAPER DETAILS.

(7) DUCT BANK HANDHOLE AND DUCT BANK DECK PENETRATION.

(8) ELECTRICAL EQUIPMENT AND CONDUIT RUNS. SEE SYSTEMWIDE ELECTRICAL PLANS FOR DETAILS.

NO.	DATE	BY	CHECK	DESIGN	REVISION / SUBMITTAL

DESIGNED BY: KR | CHECKED BY: KJK
DRAWN BY: MSK | CHECKED BY: KJK

AECOM Kimley»Horn

90% SUBMISSION - 01/22/16

METROPOLITAN COUNCIL

SOUTHWEST Green Line LRT Extension

CIVIL - VOLUME 4G
5TH AVENUE AND 7TH STREET
BRIDGE 27C18
SUPERSTRUCTURE DETAILS 6

DISCIPLINE: STRUCTURES
SHEET NAME: CBR27C18-BRG-SUP-006

SHEET 84 OF 148

Jan, 18 2016 02:58 pm V:\3400_ADC\CAD\SEGMENT E4\PLAN SHEETS\STRUCTURES\27C18\CBR27C18-BRG-SUP-006.dwg By: Victor.Madrid

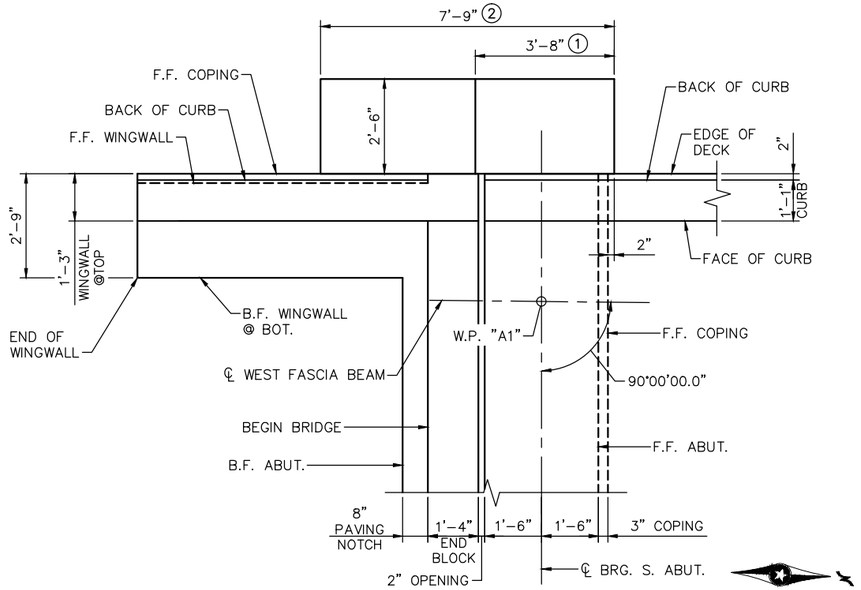

S.W. CORNER DETAIL

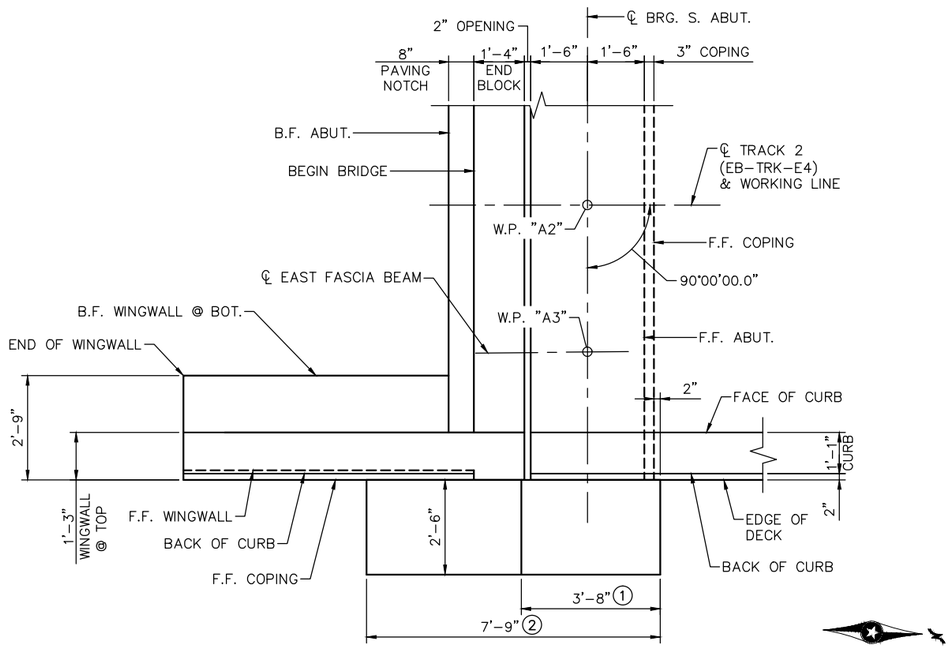

S.E. CORNER DETAIL

NOTES:

(1) MEASURED AT TOP OF PILASTER.

(2) MEASURED AT BOTTOM OF PILASTER.

NO.	DATE	BY	CHECK	DESIGN	REVISION / SUBMITTAL

DESIGNED BY: KR | CHECKED BY: KJK

DRAWN BY: MSK | CHECKED BY: KJK

AECOM Kimley»Horn

90% SUBMISSION - 01/22/16

METROPOLITAN COUNCIL

SOUTHWEST Green Line LRT Extension

CIVIL - VOLUME 4G
5TH AVENUE AND 7TH STREET
BRIDGE 27C18
SUPERSTRUCTURE DETAILS 7

DISCIPLINE: STRUCTURES

SHEET NAME: CBR27C18-BRG-SUP-007

SHEET 85 OF 148

Jan. 18 2016 02:58 pm v:\3400_ADC\CAD\SEGMENT E4\PLAN SHEETS\STRUCTURES\27C18\CBR27C18-BRG-SUP-007.dwg By: Victor.Madrid

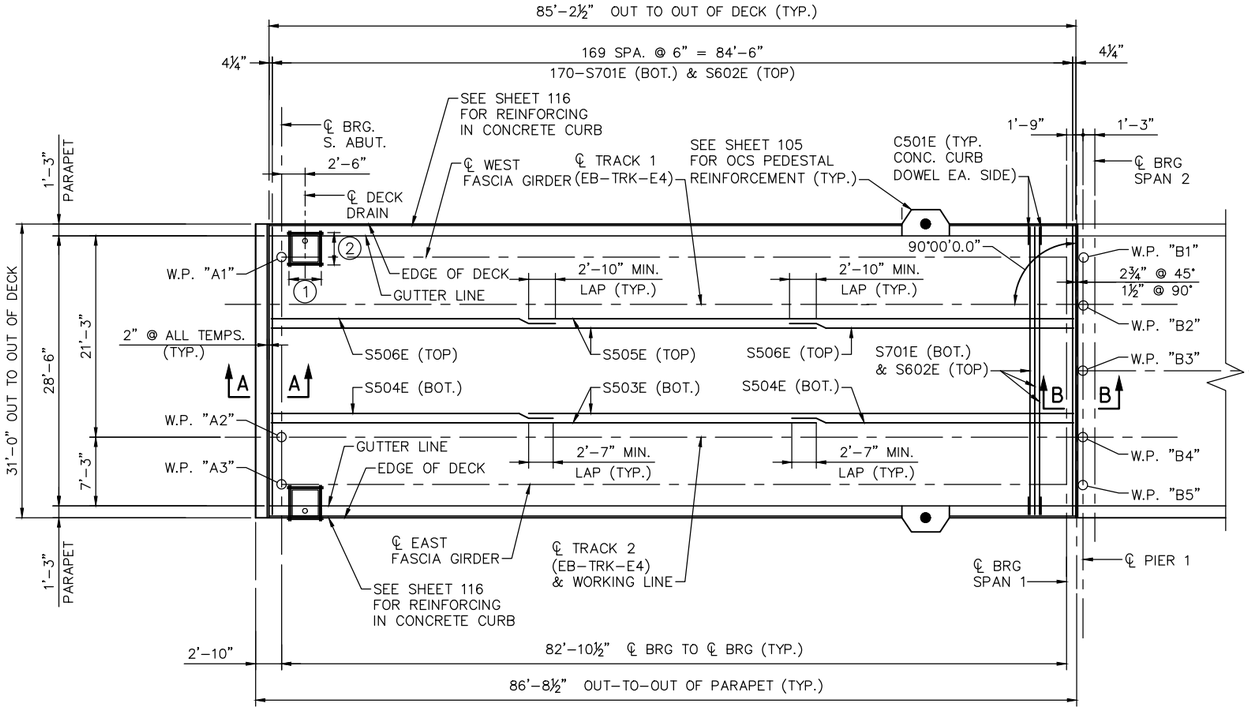

DECK PLAN
(UNIT 1)

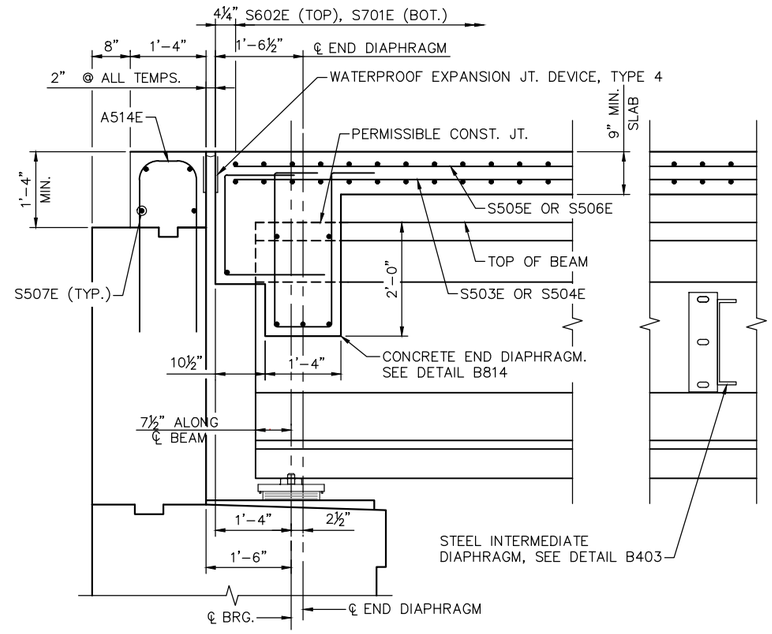

SECTION A-A

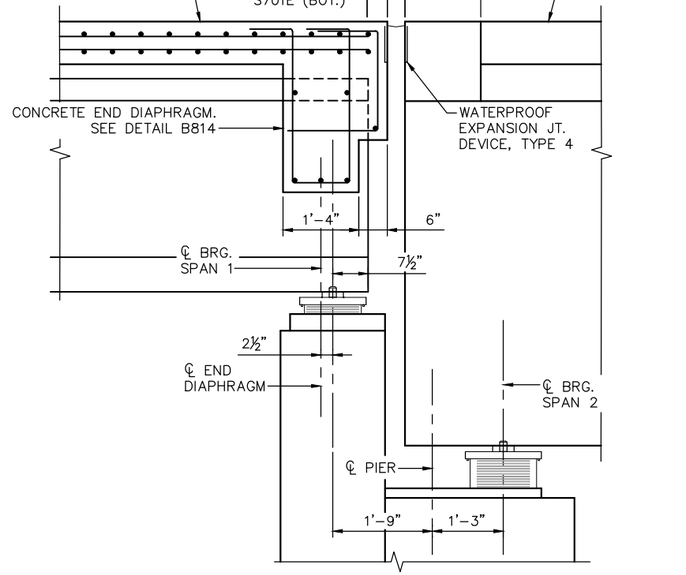

SECTION B-B

NOTES:

(1) - 4-D601E TOP & BOTTOM, PLACE 2" CLR. OF DECK DRAIN OPENING

(2) - 4-D602E TOP & BOTTOM, PLACE 2" CLR. OF DECK DRAIN OPENING

NO.	DATE	BY	CHECK	DESIGN	REVISION / SUBMITTAL

DESIGNED BY: KR | CHECKED BY: KJK
DRAWN BY: MSK | CHECKED BY: KJK

AECOM Kimley»Horn

90% SUBMISSION - 01/22/16

METROPOLITAN COUNCIL

SOUTHWEST Green Line LRT Extension

CIVIL - VOLUME 4G
5TH AVENUE AND 7TH STREET
BRIDGE 27C18
SUPERSTRUCTURE REINFORCMENT 1

DISCIPLINE: STRUCTURES

SHEET NAME: CBR27C18-BRG-SUP-008

SHEET 86 OF 148

Jan, 18 2016 02:59 pm v:\3400_ADC\CAD\SEGMENT E4\PLAN SHEETS\STRUCTURES\27C18\CBR27C18-BRG-SUP-008.dwg By: Victor.Madrid

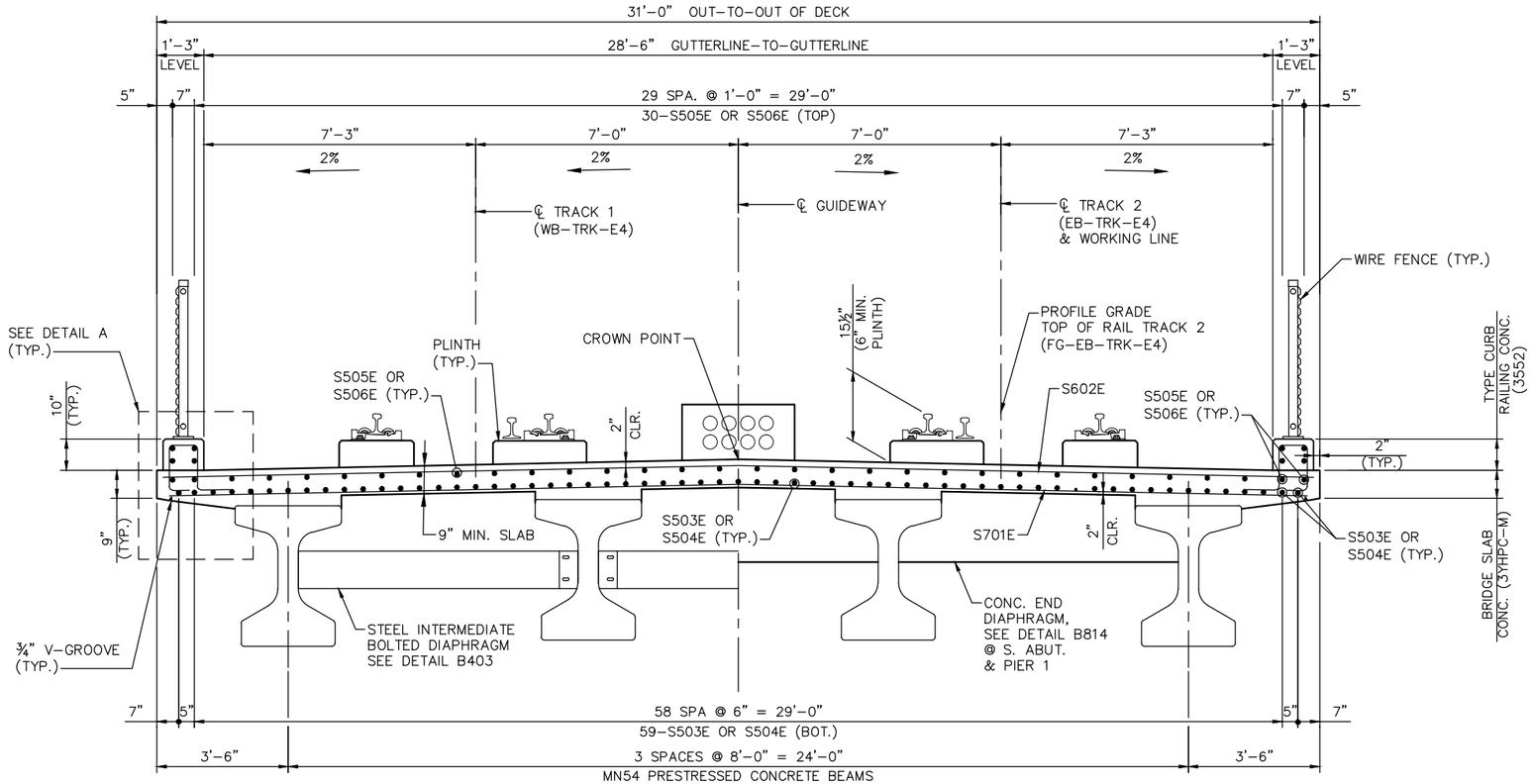

WEST

TRANSVERSE SECTION
(UNIT 1)

EAST

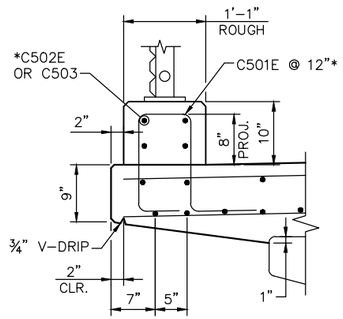

DETAIL A

* REINFORCEMENT TABLE AND DETAILS SHOWN ON SHEET 116

BILL OF REINFORCEMENT FOR SUPERSTRUCTURE (UNIT 1)

BAR	NO.	LENGTH	SHAPE	LOCATION
S701E	170	30'-8"	STR.	BOT. TRANS.
S602E	170	30'-8"	STR.	TOP TRANS.
S503E	61	60'-0"	STR.	BOT. LONG.
S504E	61	27'-6"	STR.	BOT. LONG. LAP
S505E	32	60'-0"	STR.	TOP LONG.
S506E	32	27'-9"	STR.	TOP LONG. LAP
S507E	4	30'-8"	STR.	PAVING BLOCK LONG.

BILL OF REINFORCEMENT FOR DECK DRAIN (UNIT 1)

D601E	16	4'-8"	STR.	DECK DRAIN LONG.
D602E	16	4'-8"	STR.	DECK DRAIN TRANS.

NO.	DATE	BY	CHECK	DESIGN	REVISION / SUBMITTAL

DESIGNED BY: KR | CHECKED BY: KJK
DRAWN BY: MSK | CHECKED BY: KJK

AECOM Kimley»Horn

90% SUBMISSION - 01/22/16

METROPOLITAN COUNCIL

SOUTHWEST Green Line LRT Extension

CIVIL - VOLUME 4G
5TH AVENUE AND 7TH STREET
BRIDGE 27C18
SUPERSTRUCTURE REINFORCMENT 2

DISCIPLINE: STRUCTURES
SHEET NAME: CBR27C18-BRG-SUP-009

SHEET 87 OF 148

Jan, 18 2016 02:59 pm v:\3400_ADC\CAD\SEGMENT E4\PLAN SHEETS\STRUCTURES\27C18\CBR27C18-BRG-SUP-009.dwg By: Victor.Madrid

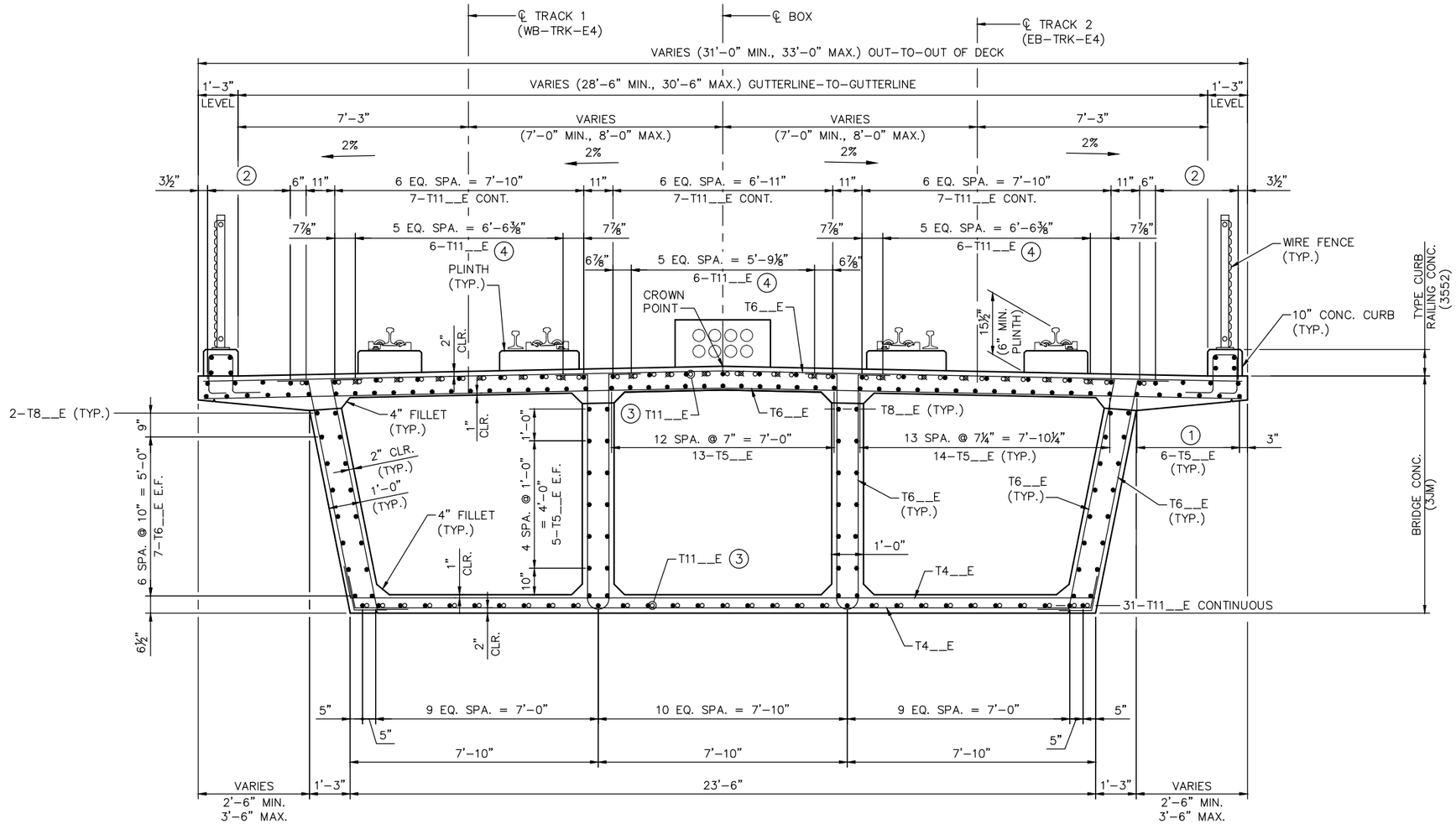

UNIT 2 TRANSVERSE SECTION

NOTES:

SEE SHEETS 88–91 FOR ADDITIONAL LONGITUDINAL REINFORCEMENT LAYOUT INFORMATION.

① VARIES 5 SPA. @ 5½" = 2'–3½" 'MIN.
TO 5 SPA. @ 7⅞" = 3'–3⅜" MAX.

② VARIES 3 SPA. @ 6⅞" = 1'–8⅝" MIN.
TO 3 SPA. @ 10⅞" = 2'–8⅝" MAX.

③ O INDICATES ADDITIONAL T11__E BARS PLACED AS SHOWN ON SHEETS 88–91.

④ ⊠ INDICATES ADDITIONAL T11__E BARS PLACED AS SHOWN ON SHEETS 88–91.

NO.	DATE	BY	CHECK	DESIGN	REVISION / SUBMITTAL

DESIGNED BY: KJK CHECKED BY: DJL
DRAWN BY: MSK CHECKED BY: DJL

AECOM Kimley»Horn

90% SUBMISSION - 01/22/16

METROPOLITAN COUNCIL

SOUTHWEST Green Line LRT Extension

CIVIL - VOLUME 4G
5TH AVENUE AND 7TH STREET
BRIDGE 27C18
SUPERSTRUCTURE REINFORCMENT 7

DISCIPLINE: STRUCTURES
SHEET NAME: CBR27C18-BRG-SUP-015

SHEET 92 OF 148

Jan, 19 2016 08:35 am V:\3400_ADC\CAD\SEGMENT E4\PLAN SHEETS\STRUCTURES\27C18\CBR27C18-BRG-SUP-015.dwg By: kevin.kimm

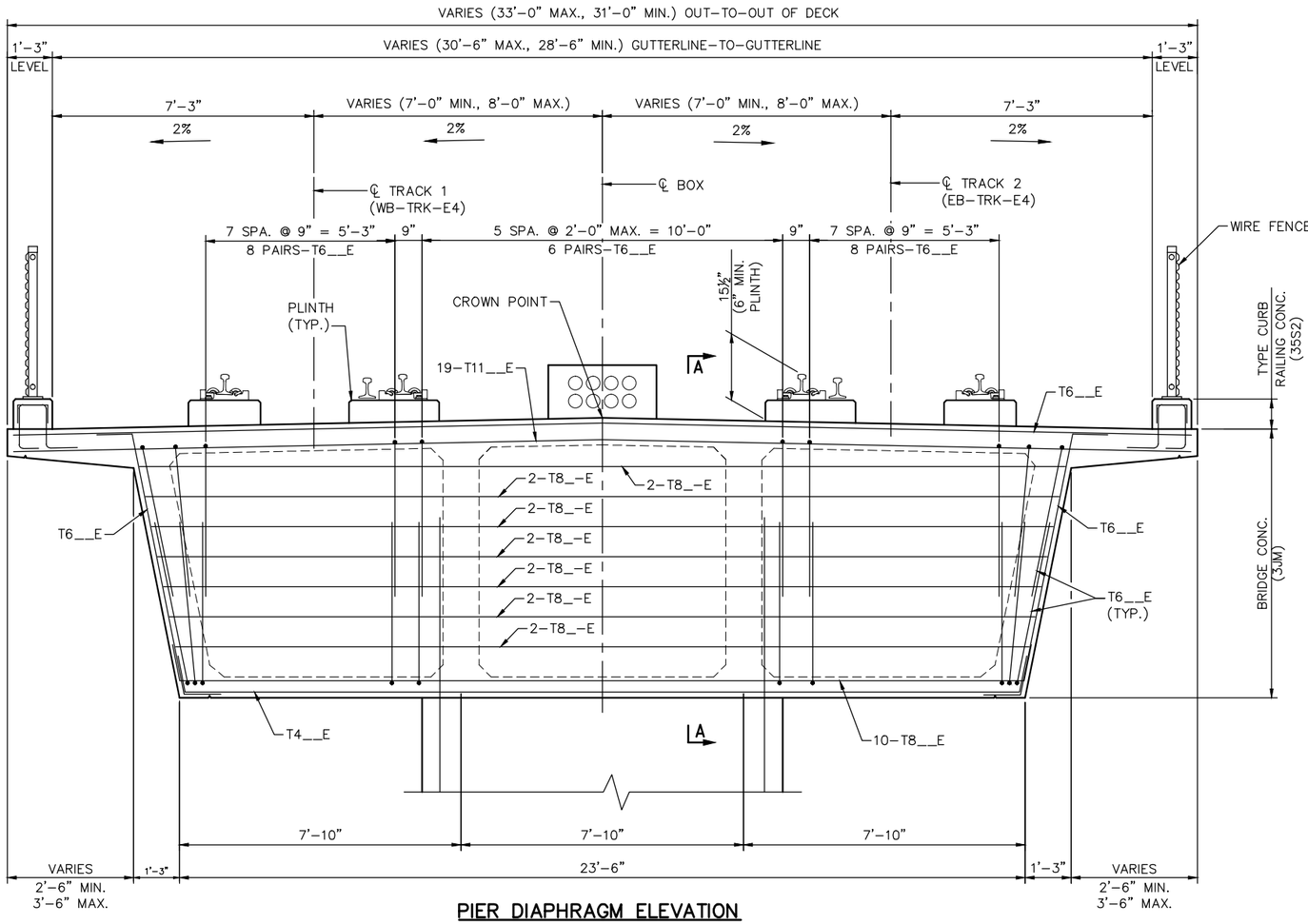

PIER DIAPHRAGM ELEVATION

(TYPICAL LONGITUDINAL REINF. NOT SHOWN FOR CLARITY)

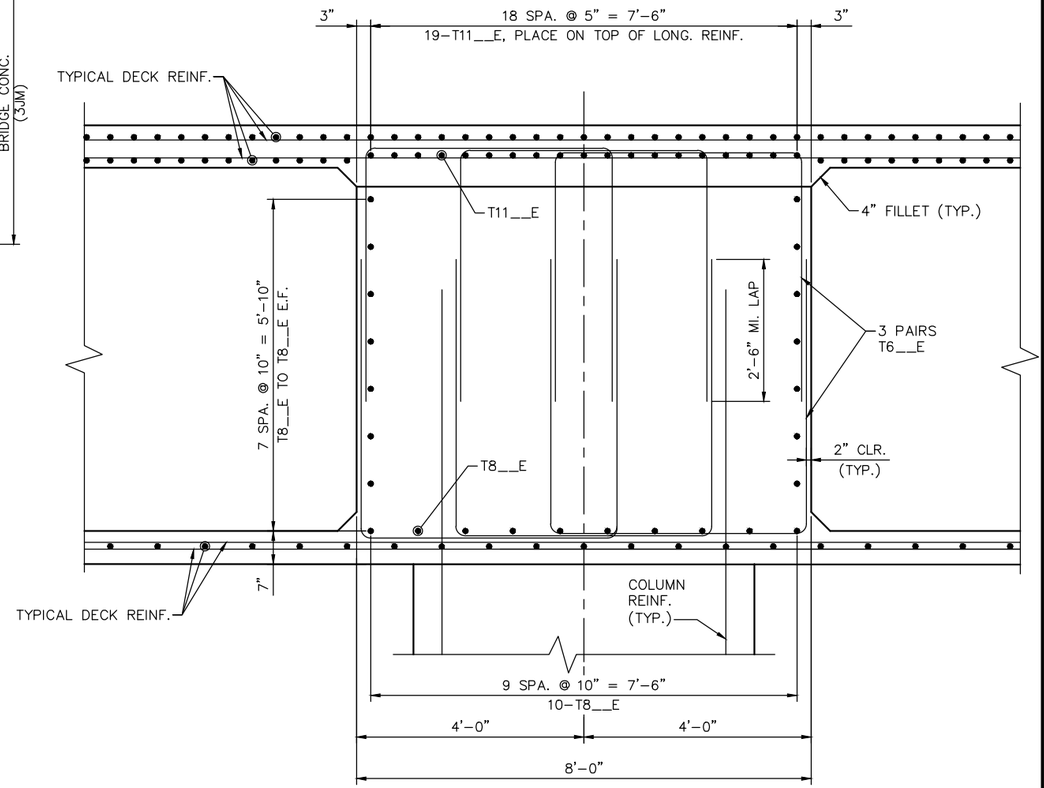

SECTION A-A

NO.	DATE	BY	CHECK	DESIGN	REVISION / SUBMITTAL

DESIGNED BY: KJK | CHECKED BY: DJL

DRAWN BY: MSK | CHECKED BY: DJL

AECOM Kimley»Horn

90% SUBMISSION - 01/22/16

METROPOLITAN COUNCIL

SOUTHWEST Green Line LRT Extension

CIVIL - VOLUME 4G
5TH AVENUE AND 7TH STREET
BRIDGE 27C18
SUPERSTRUCTURE REINFORCMENT 8

DISCIPLINE: STRUCTURES

SHEET NAME: CBR27C18-BRG-SUP-016

SHEET 93 OF 148

Jan, 19 2016 08:36 am V:\3400_ADC\CAD\SEGMENT E4\PLAN SHEETS\STRUCTURES\27C18\CBR27C18-BRG-SUP-016.dwg By: kevin.kimm

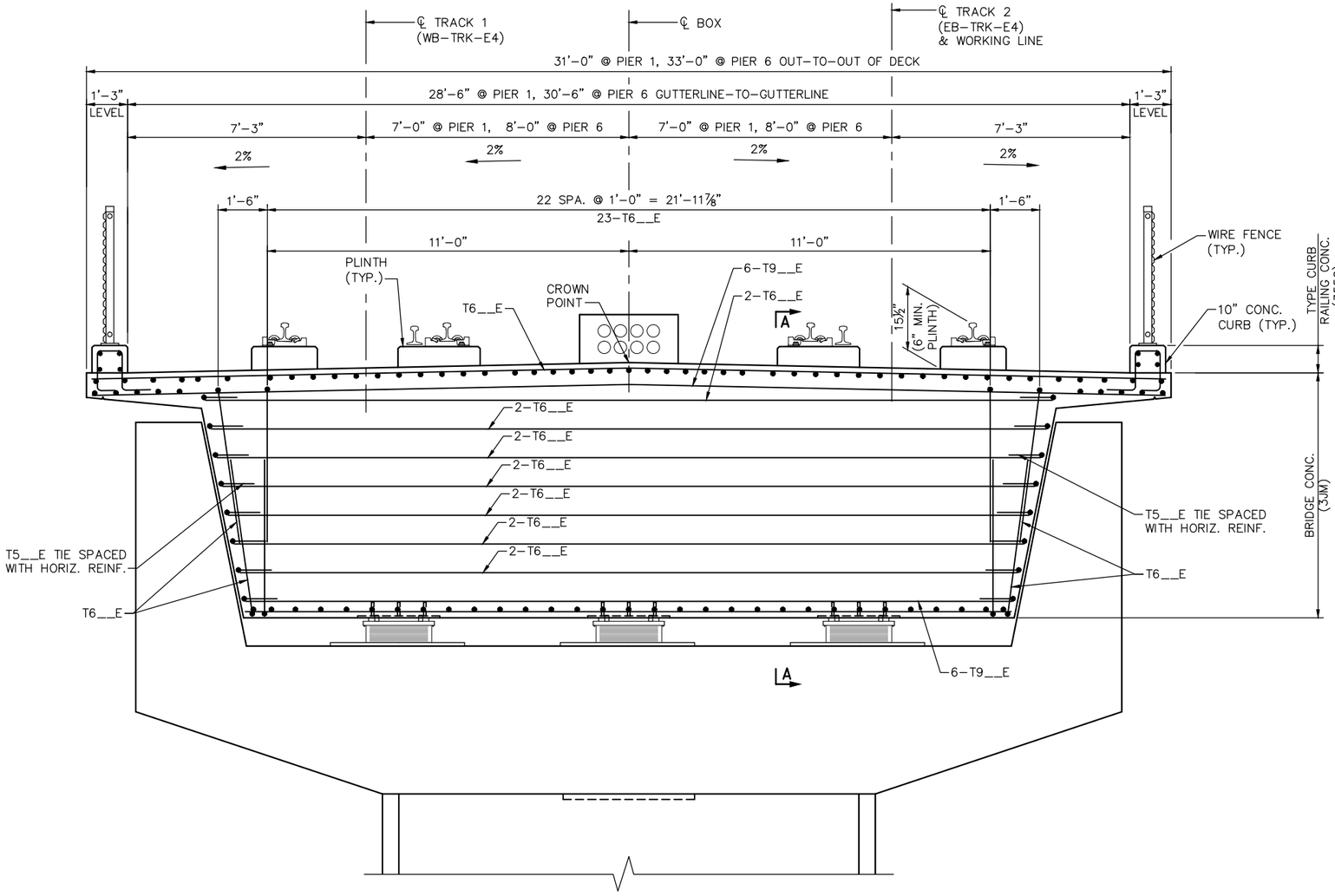

END DIAPHRAGM ELEVATION

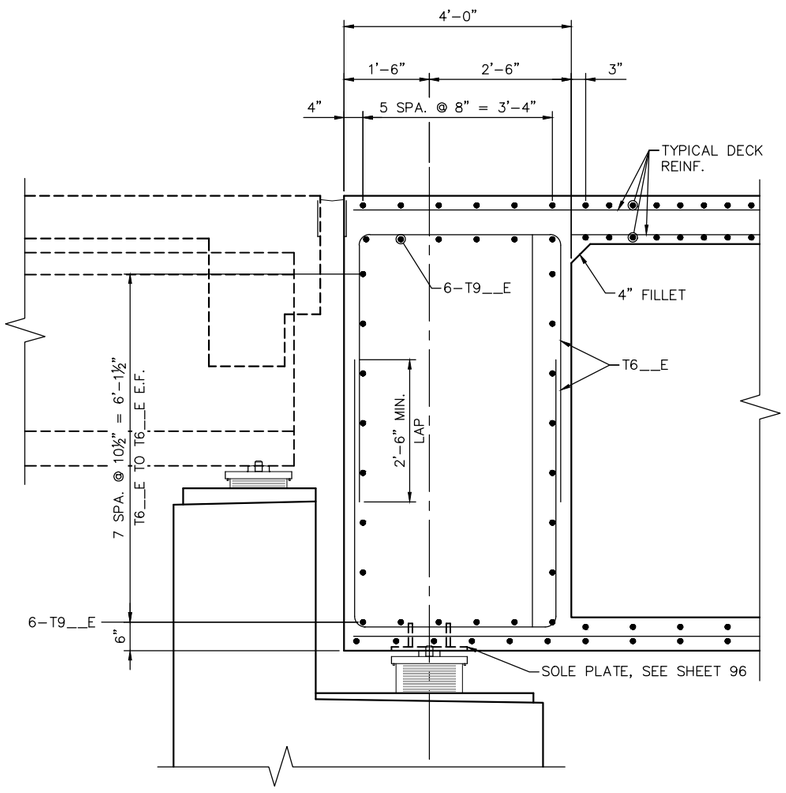

SECTION A–A

NO.	DATE	BY	CHECK	DESIGN	REVISION / SUBMITTAL

DESIGNED BY: KJK CHECKED BY: DJL
DRAWN BY: MSK CHECKED BY: DJL

AECOM Kimley»Horn

90% SUBMISSION - 01/22/16

METROPOLITAN COUNCIL

SOUTHWEST Green Line LRT Extension

CIVIL - VOLUME 4G
5TH AVENUE AND 7TH STREET
BRIDGE 27C18
SUPERSTRUCTURE REINFORCMENT 10

DISCIPLINE: STRUCTURES
SHEET NAME: CBR27C18-BRG-SUP-018

SHEET 95 OF 148

Jan, 19 2016 08:36 am V:\3400_ADC\CAD\SEGMENT E4\PLAN SHEETS\STRUCTURES\27C18\CBR27C18-BRG-SUP-018.dwg By: kevin.kimm

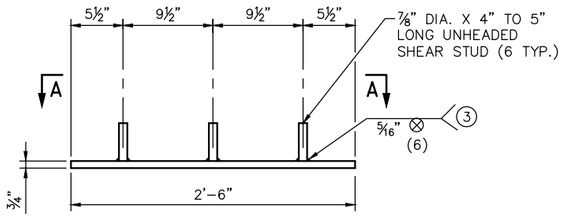

DECK GIRDER SOLE PLATE

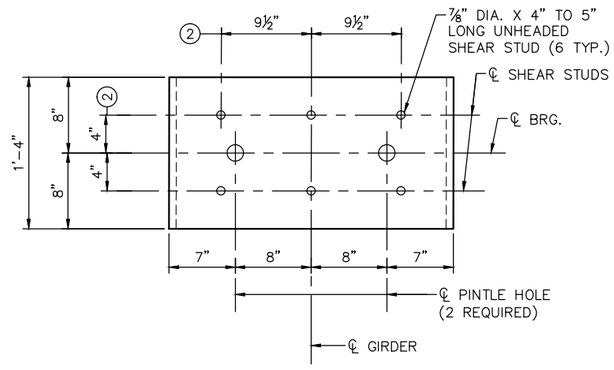

SECTION A–A

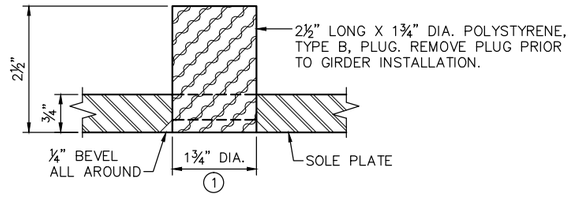

PINTLE HOLE DETAIL

BILL OF REINFORCEMENT FOR GIRDER

BAR	NO.	LENGTH	SHAPE	LOCATION
T 01E		'-"		
T 02E		'-"		
T 03E		'-"		
T 04E		'-"		
T 05E		'-"		
T 06E		'-"		
T 07E		'-"		
T 08E		'-"		
T 09E		'-"		
T 10E		'-"		
T 11E		'-"		
T 12E		'-"		
T 13E		'-"		
T 14E		'-"		
T 15E		'-"		
T 16E		'-"		
T 17E		'-"		
T18E		'-"		
T 19E		'-"		
T 20E		'-"		
T 21E		'-"		
T 22E		'-"		
T 23E		'-"		
T 24E		'-"		
T 25E		'-"		
T 26E		'-"		
T 27E		'-"		
T 28E		'-"		
T 29E		'-"		
T 30E		'-"		

SOLE PLATE NOTES:

MATERIAL TO BE STRUCTURAL STEEL PER MnDOT SPEC. 3306.

WELDED STUDS TO BE WELDABLE CARBON STEEL PER MnDOT SPEC. 3391.2.D.

SOLE PLATE FOR BEARING ASSEMBLY TO BE GALVANIZED PER MnDOT SPEC. 3394 AFTER FABRICATION.

PINTLE HOLES SHALL BE FREE OF ZINC BUILD UP FROM GALVANIZING.

(1) FOR 1½" DIA. PINTLES.

(2) THESE DIMENSIONS MAY BE MODIFIED TO CLEAR REINFORCING BARS. HOWEVER, CHANGES MUST BE APPROVED BY THE ENGINEER.

(3) THE REQUIREMENTS FOR WELDING STUDS SHALL COMPLY WITH AASHTO/AWS D1.1.

NO.	DATE	BY	CHECK	DESIGN	REVISION / SUBMITTAL

DESIGNED BY: KJK | CHECKED BY: DJL
DRAWN BY: MSK | CHECKED BY: DJL

AECOM Kimley»Horn

90% SUBMISSION - 01/22/16

METROPOLITAN COUNCIL

SOUTHWEST Green Line LRT Extension

CIVIL - VOLUME 4G
5TH AVENUE AND 7TH STREET
BRIDGE 27C18
SUPERSTRUCTURE REINFORCMENT 11

DISCIPLINE: STRUCTURES
SHEET NAME: CBR27C18-BRG-SUP-019

SHEET 96 OF 148

Jan, 19 2016 08:37 am V:\3400_ADC\CAD\SEGMENT E4\PLAN SHEETS\STRUCTURES\27C18\CBR27C18-BRG-SUP-019.dwg By: kevin.kimm

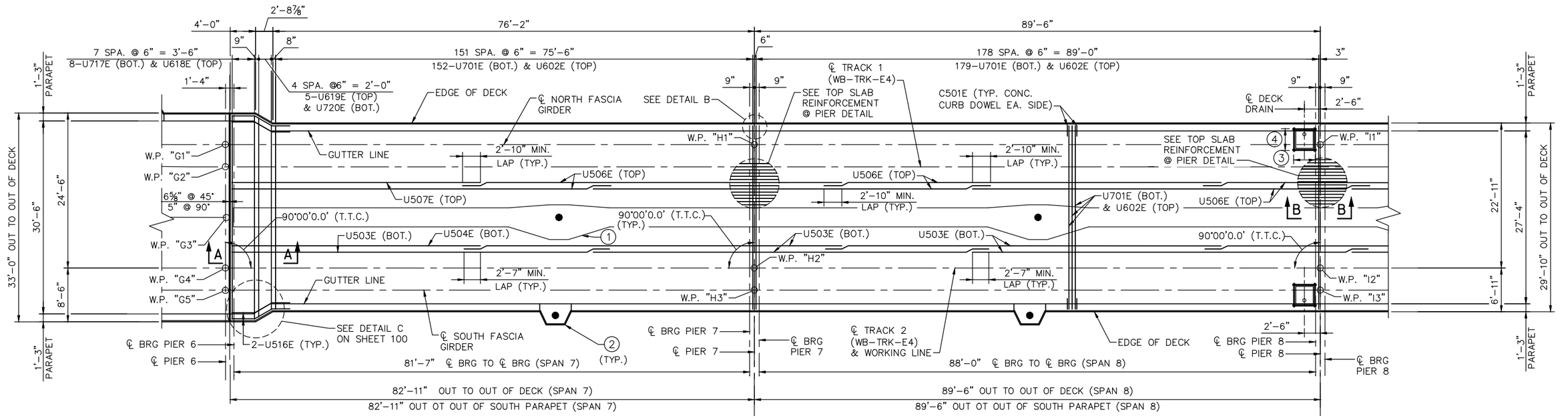

DECK PLAN
(UNIT 3 – SPANS 7–8)

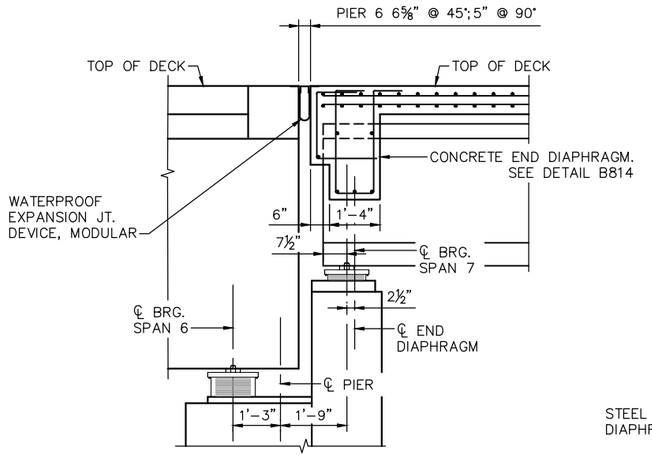

SECTION A–A

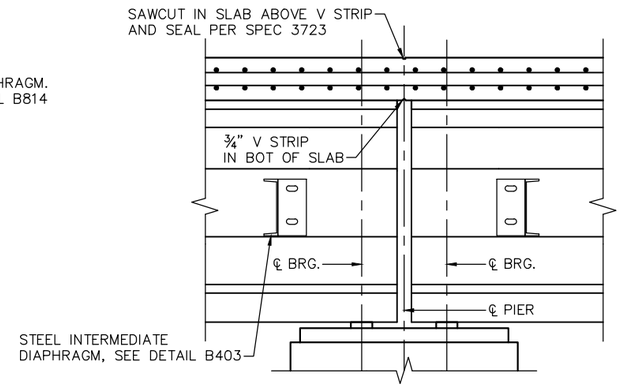

SECTION B–B

NOTES:

1. – SEE SHEETS 103 & 104 FOR DUCT BANK/WALKWAY REINFORCEMENT.
2. – SEE SHEET 105 FOR OCS PEDESTAL REINFORCEMENT.
3. – 4–D601E TOP & BOTTOM, PLACE 2" CLEAR OF DECK DRAIN OPENING
4. – 4–D602E TOP & BOTTOM, PLACE 2" CLEAR OF DECK DRAIN OPENING

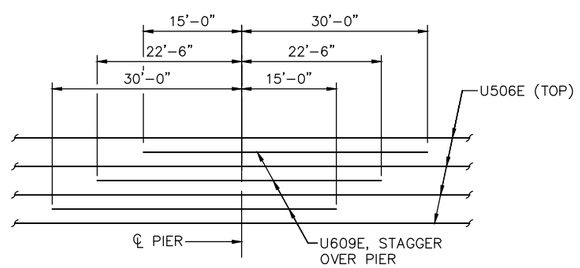

TOP SLAB REINFORCEMENT AT PIER

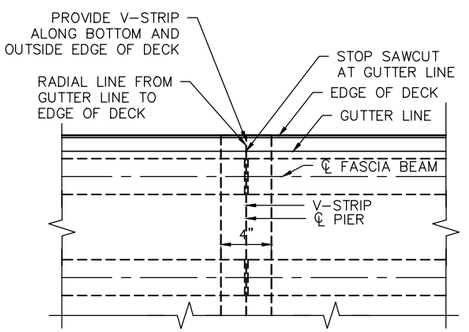

DETAIL "B"

NO.	DATE	BY	CHECK	DESIGN	REVISION / SUBMITTAL

DESIGNED BY: KR | CHECKED BY: KJK
DRAWN BY: MSK | CHECKED BY: KJK

AECOM Kimley»Horn

90% SUBMISSION - 01/22/16

METROPOLITAN COUNCIL

SOUTHWEST Green Line LRT Extension

CIVIL - VOLUME 4G
5TH AVENUE AND 7TH STREET
BRIDGE 27C18
SUPERSTRUCTURE REINFORCMENT 12

DISCIPLINE: STRUCTURES
SHEET NAME: CBR27C18-BRG-SUP-020

SHEET 97 OF 148

Jan, 18 2016 03:05 pm v:\3400_ADC\CAD\SEGMENT E4\PLAN SHEETS\STRUCTURES\27C18\CBR27C18-BRG-SUP-020.dwg By: Victor.Madrid

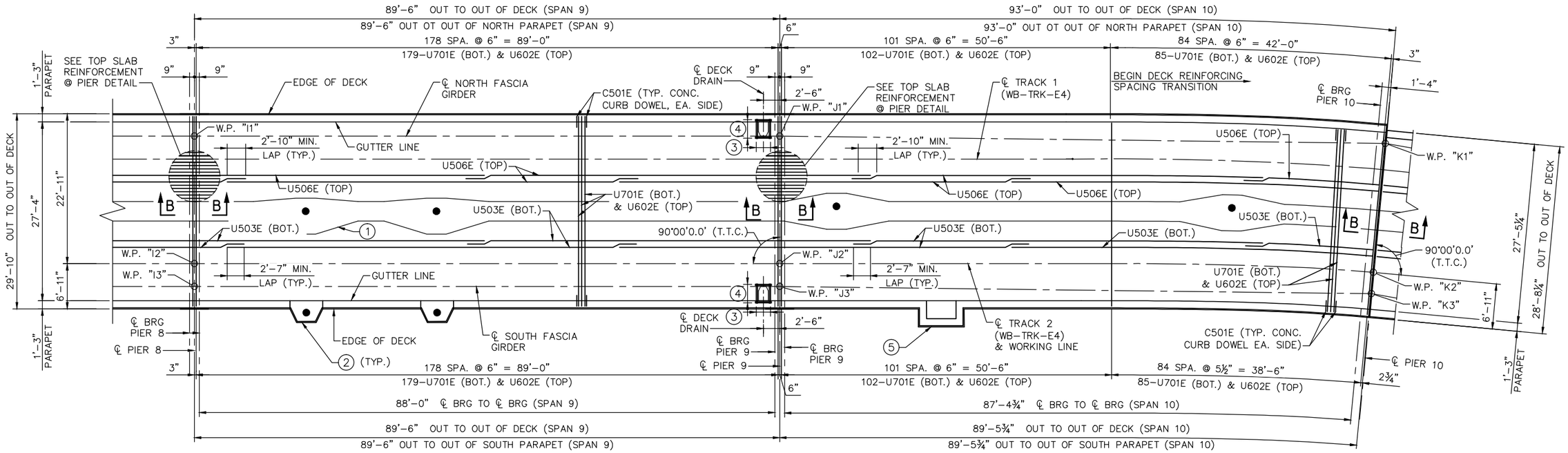

DECK PLAN
(UNIT 3 – SPANS 9–10)

NOTES:

1. SEE SHEETS 103 & 104 FOR DUCT BANK/WALKWAY REINFORCEMENT.
2. SHEET 105 FOR OCS PEDESTAL REINFORCEMENT.
3. 4–D601E TOP & BOTTOM, PLACE 2" CLEAR OF DECK DRAIN OPENING
4. 4–D602E TOP & BOTTOM, PLACE 2" CLEAR OF DECK DRAIN OPENING
5. SEE SHEET 106 FOR FRICTION MODIFIER PEDESTAL REINFORCEMENT.

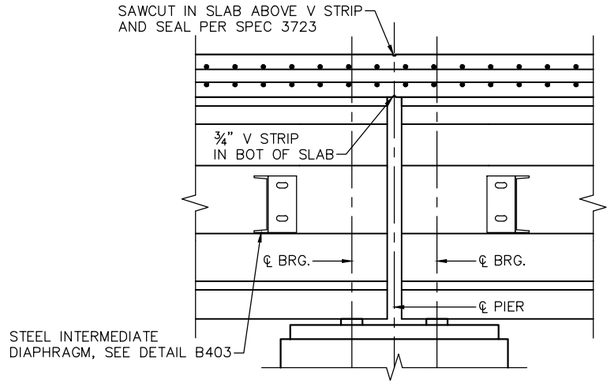

SECTION B–B

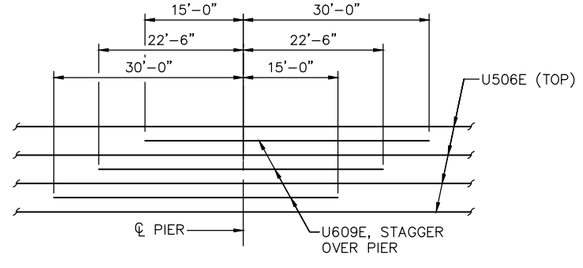

TOP SLAB REINFORCEMENT AT PIER

NO.	DATE	BY	CHECK	DESIGN	REVISION / SUBMITTAL

DESIGNED BY: KR | CHECKED BY: KJK
DRAWN BY: MSK | CHECKED BY: KJK

AECOM Kimley»Horn

90% SUBMISSION - 01/22/16

METROPOLITAN COUNCIL

SOUTHWEST Green Line LRT Extension

CIVIL - VOLUME 4G
5TH AVENUE AND 7TH STREET
BRIDGE 27C18
SUPERSTRUCTURE REINFORCMENT 13

DISCIPLINE: STRUCTURES
SHEET NAME: CBR27C18-BRG-SUP-021

SHEET 98 OF 148

Jan, 18 2016 03:07 pm V:\3400_ADC\CAD\SEGMENT E4\PLAN SHEETS\STRUCTURES\27C18\CBR27C18-BRG-SUP-021.dwg By: Victor.Madrid

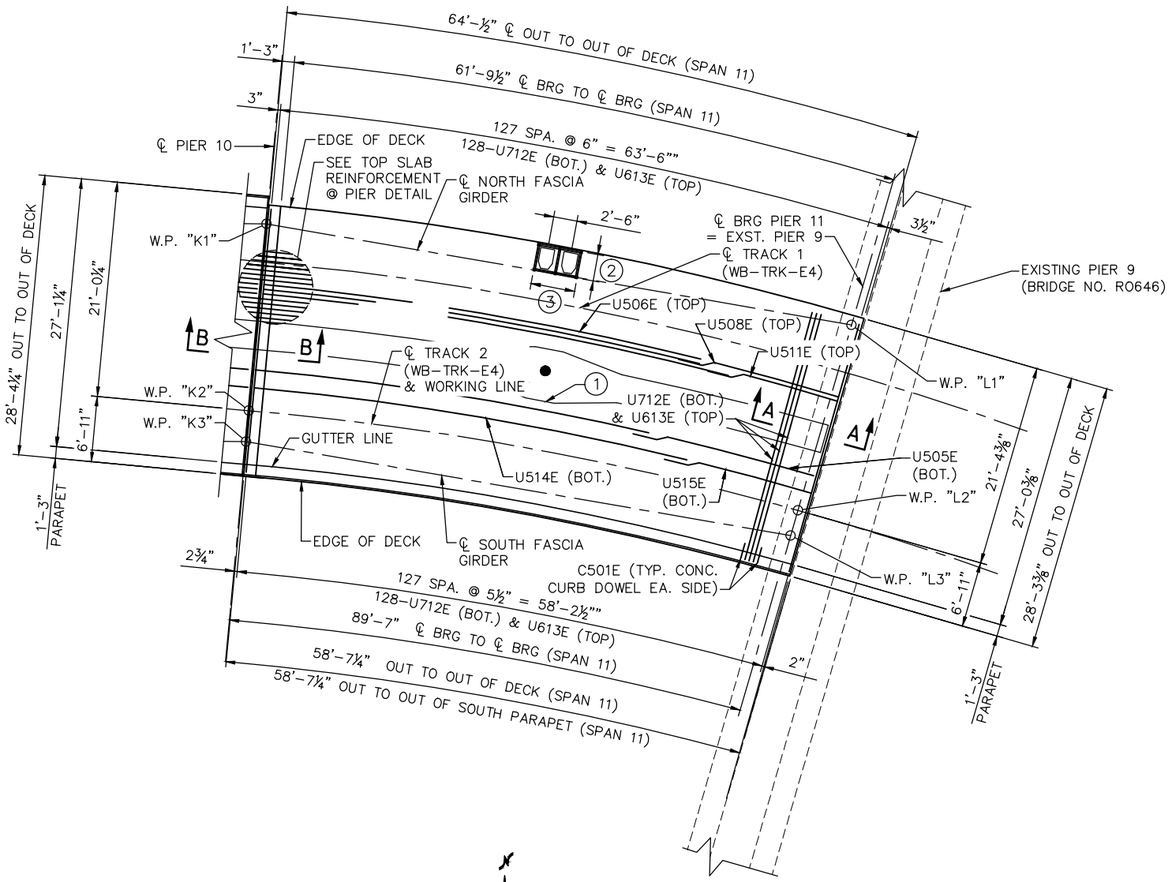

DECK PLAN
(UNIT 3 – SPAN 11)

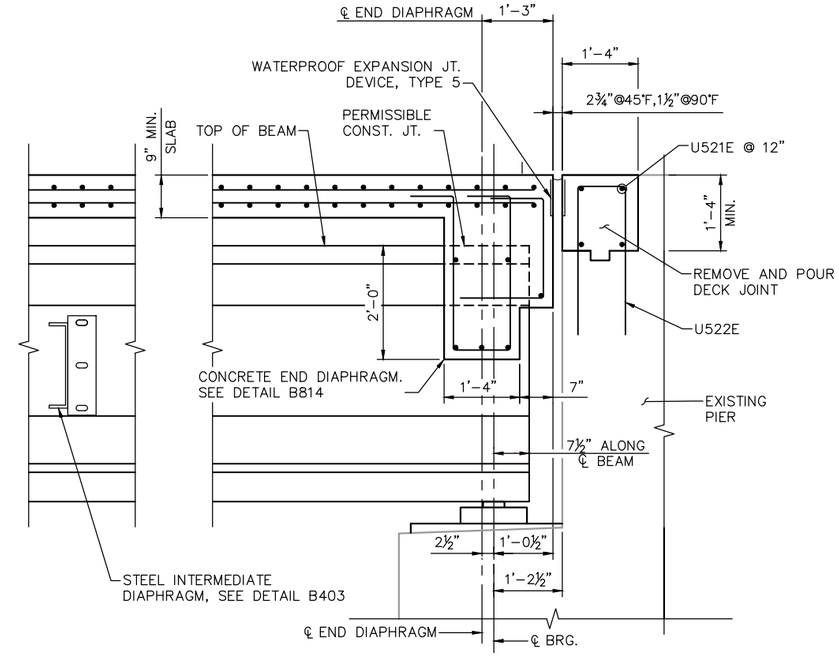

SECTION A–A

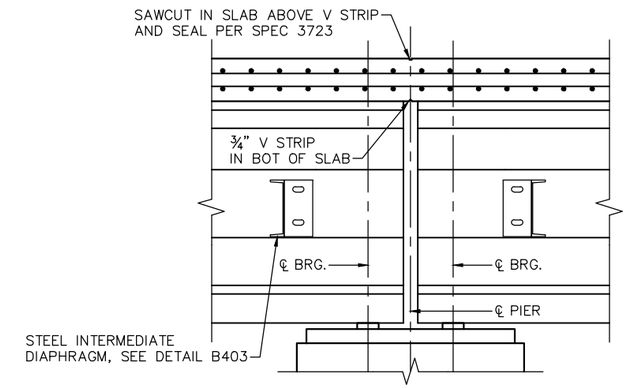

SECTION B–B

NOTES:

1. SEE SHEETS 103 & 104 FOR DUCT BANK/WALKWAY REINFORCEMENT.
2. 4–D601E TOP & BOTTOM, PLACE 2" CLEAR OF DECK DRAIN OPENING
3. 6–D603E TOP & BOTTOM, PLACE 2" CLEAR OF DECK DRAIN OPENING

NO.	DATE	BY	CHECK	DESIGN	REVISION / SUBMITTAL

DESIGNED BY: KR | CHECKED BY: KJK
DRAWN BY: MSK | CHECKED BY: KJK

AECOM Kimley»Horn

90% SUBMISSION - 01/22/16

METROPOLITAN COUNCIL

SOUTHWEST Green Line LRT Extension

CIVIL - VOLUME 4G
5TH AVENUE AND 7TH STREET
BRIDGE 27C18
SUPERSTRUCTURE REINFORCMENT 14

DISCIPLINE: STRUCTURES
SHEET NAME: CBR27C18-BRG-SUP-022

SHEET 99 OF 148

Jan, 18 2016 03:08 pm v:\3400_ADC\CAD\SEGMENT E4\PLAN SHEETS\STRUCTURES\27C18\CBR27C18-BRG-SUP-022.dwg By: Victor.Madrid

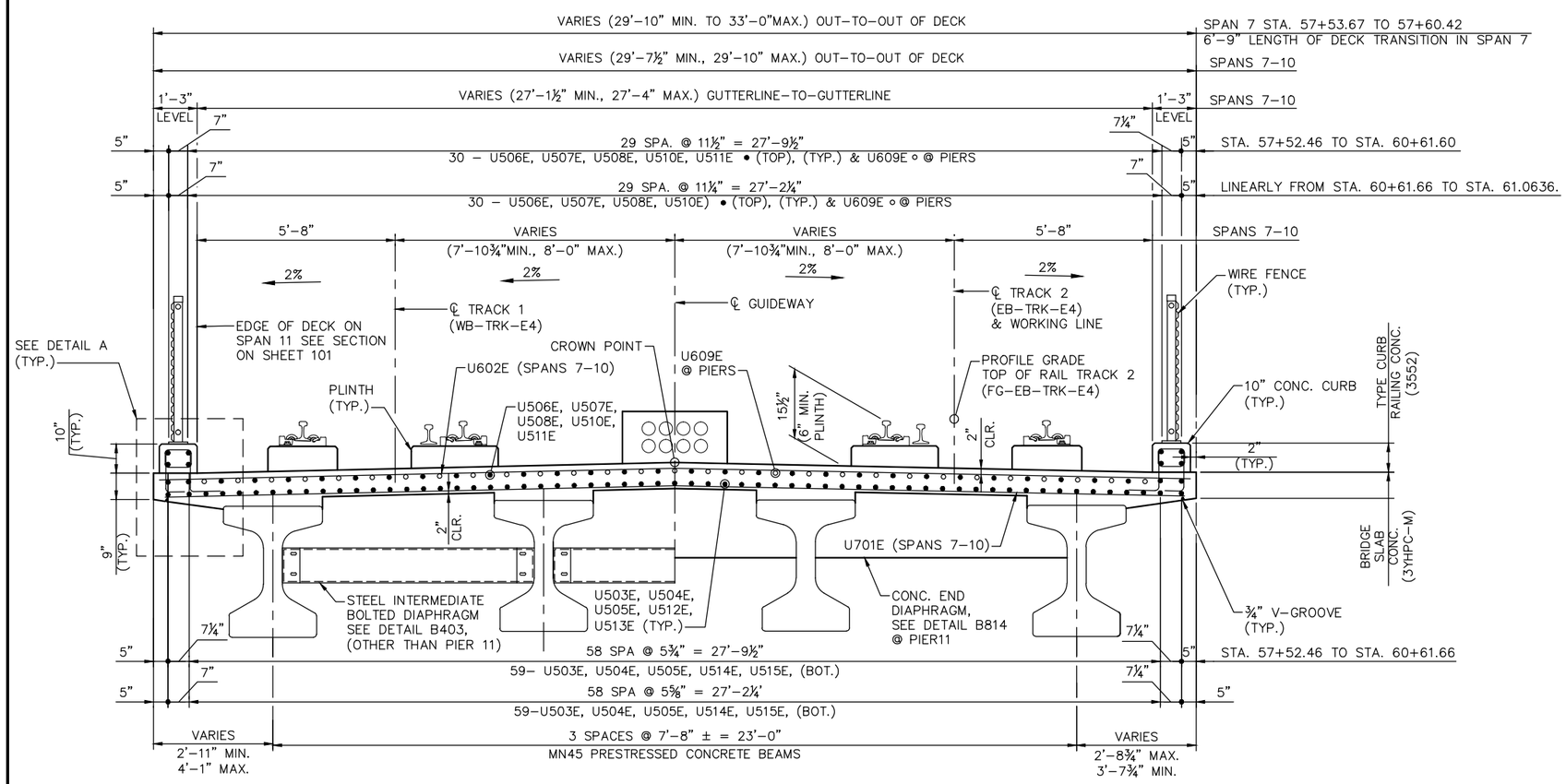

TRANSVERSE SECTION

(UNIT 3, SPANS 7–10)

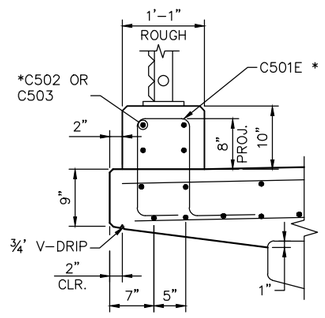

* REINFOCEMENT TABLE AND DETAILS SHOWN ON SHEET 116

DETAIL A

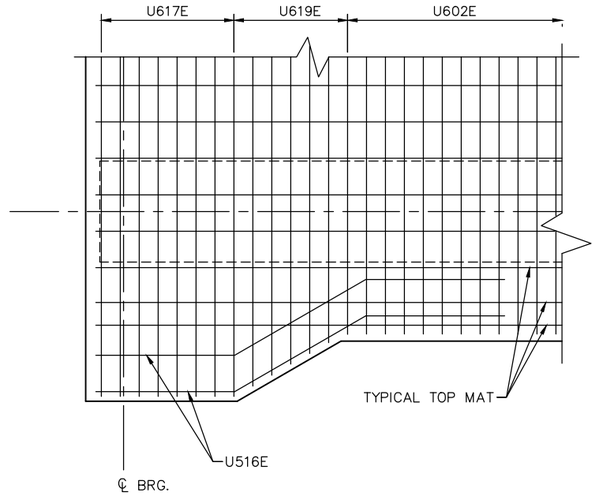

TOP REINFORCING

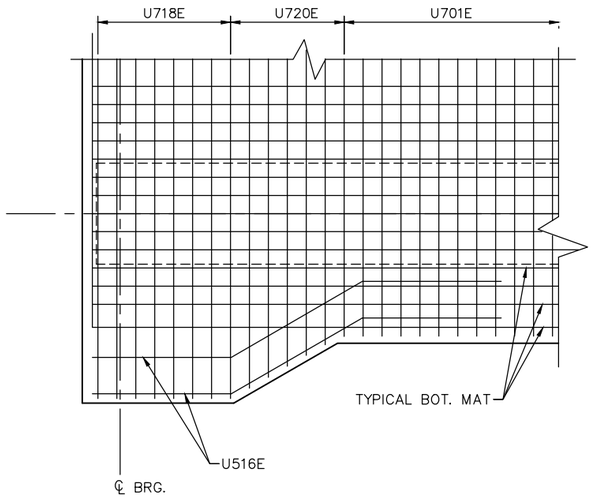

BOTTOM REINFORCING

DETAIL C

NO.	DATE	BY	CHECK	DESIGN	REVISION / SUBMITTAL

DESIGNED BY: KR | CHECKED BY: KJK
DRAWN BY: MSK | CHECKED BY: KJK

AECOM Kimley»Horn

90% SUBMISSION - 01/22/16

METROPOLITAN COUNCIL

SOUTHWEST Green Line LRT Extension

CIVIL - VOLUME 4G
5TH AVENUE AND 7TH STREET BRIDGE 27C18
SUPERSTRUCTURE REINFORCMENT 15

DISCIPLINE: STRUCTURES

SHEET NAME: CBR27C18-BRG-SUP-023

SHEET 100 OF 148

Jan, 18 2016 03:09 pm v:\3400_ADC\CAD\SEGMENT E4\PLAN SHEETS\STRUCTURES\27C18\CBR27C18-BRG-SUP-023.dwg By: Victor.Madrid

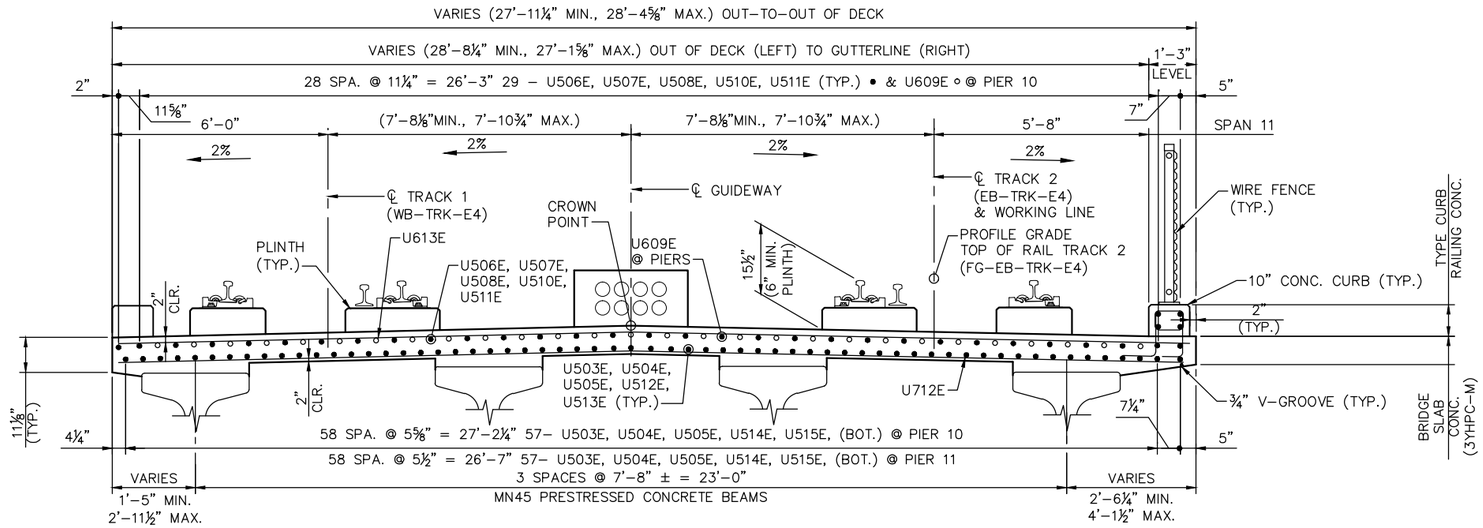

TRANSVERSE SECTION

(UNIT 3) (SPAN 11), FOR INFORMATION NOT SHOWN IN SPAN 11, SEE SPANS 7–10

NO.	DATE	BY	CHECK	DESIGN	REVISION / SUBMITTAL

DESIGNED BY: KR | CHECKED BY: KJK
DRAWN BY: MSK | CHECKED BY: KJK

AECOM Kimley»Horn

90% SUBMISSION - 01/22/16

METROPOLITAN COUNCIL

SOUTHWEST Green Line LRT Extension

CIVIL - VOLUME 4G
5TH AVENUE AND 7TH STREET
BRIDGE 27C18
SUPERSTRUCTURE REINFORCMENT 16

DISCIPLINE: STRUCTURES
SHEET NAME: CBR27C18-BRG-SUP-024

SHEET 101 OF 148

Jan, 18 2016 03:09 pm v:\3400_ADC\CAD\SEGMENT E4\PLAN SHEETS\STRUCTURES\27C18\CBR27C18–BRG–SUP–024.dwg By: Victor.Madrid

BILL OF REINFORCEMENT FOR SUPERSTRUCTURE (UNIT 3)

BAR	NO.	LENGTH	SHAPE	LOCATION
U701E	697	29'-6"	STR.	BOT TRANS.
U602E	697	29'-6"	STR.	TOP TRANS.
U503E	366	60'-0"	STR.	BOT. LONG.
U504E	31	39'-1"	STR.	BOT. LONG. LAP
U505E	31	*	STR.	BOT. LONG.
U506E	366	60'-0"	STR.	TOP LONG.
U507E	16	39'-4"	STR.	TOP LONG. LAP
U508E	16	*	STR.	TOP LONG. LAP
U609E	116	45'-0"	STR.	TOP PIER
U510E	31	40'-0"	STR.	TOP LONG. LAP, SPAN 11
U511E	31	*	STR.	TOP LONG. LAP, SPAN 11
U712E	128	**	STR.	BOT. TRANS., SPAN 11
U613E	128	**	STR.	TOP. TRANS., SPAN 11
U514E	16	40'-0"	STR.	BOT. LONG. LAP, SPAN 11
U515E	16	*	STR.	BOT. LONG. LAP, SPAN 11
U516E	8	10'-6"	BENT	SPAN 7 TRANS.
U617E	8	32'-8"	STR.	SPAN 7 TOP TRANS.
U618E	8	32'-8"	STR.	SPAN 7 BOT. TRANS.
U619E	5	***	STR.	SPAN 7 TOP TRANS.
U620E	5	****	STR.	SPAN 7 BOT. TRANS.

BILL OF REINFORCEMENT FOR DECK DRAIN (UNIT 3)

D601E	32	4'-8"	STR.	SPAN 8,9 DECK DRAIN LONG.
D602E	44	4'-8"	STR.	SPAN 8,9-11 DECK DRAIN TRANS.
D603E	8	9'-0"	STR.	SPAN 11 DECK DRAIN DOUBLE

* – U508E – VARIES FROM 24'–10" TO 17'–4"
– U511E – VARIES FROM 21'–4" TO 13'–10" — 6" INCREMENTS
– U505E – VARIES FROM 24'–7" TO 17'–1"
– U515E – VARIES FROM 21'1" TO 13'–7" — 3" INCREMENTS

** – U612E & U613E VARIES FROM 28'–4" TO 27'–11" — 1" INCREMENTS

*** – U619E & U620E VARIES FROM 32'–8" TO 29'–6" — 3" INCREMENTS

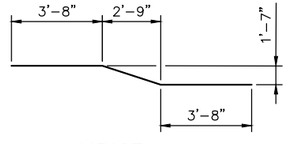

U516E

Jan, 18 2016 03:10 pm v:\3400_ADC\CAD\SEGMENT E4\PLAN SHEETS\STRUCTURES\27C18\CBR27C18-BRG-SUP-025.dwg By: Victor.Madrid

NO.	DATE	BY	CHECK	DESIGN	REVISION / SUBMITTAL

DESIGNED BY: DJL | CHECKED BY: KJK
DRAWN BY: MSK | CHECKED BY: KJK

AECOM Kimley»Horn

90% SUBMISSION - 01/22/16

METROPOLITAN COUNCIL

SOUTHWEST Green Line LRT Extension

CIVIL - VOLUME 4G
5TH AVENUE AND 7TH STREET
BRIDGE 27C18
SUPERSTRUCTURE REINFORCEMENT 17

DISCIPLINE: **STRUCTURES**
SHEET NAME: **CBR27C18-BRG-SUP-025**

SHEET **102** OF **148**

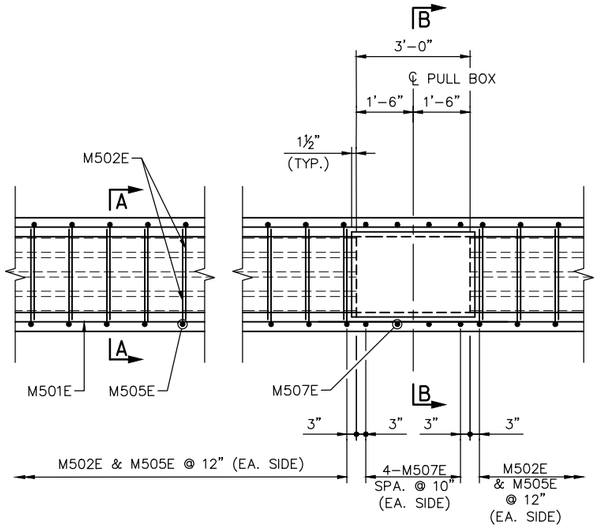

OCS – HAND HOLE BOX REINFORCING

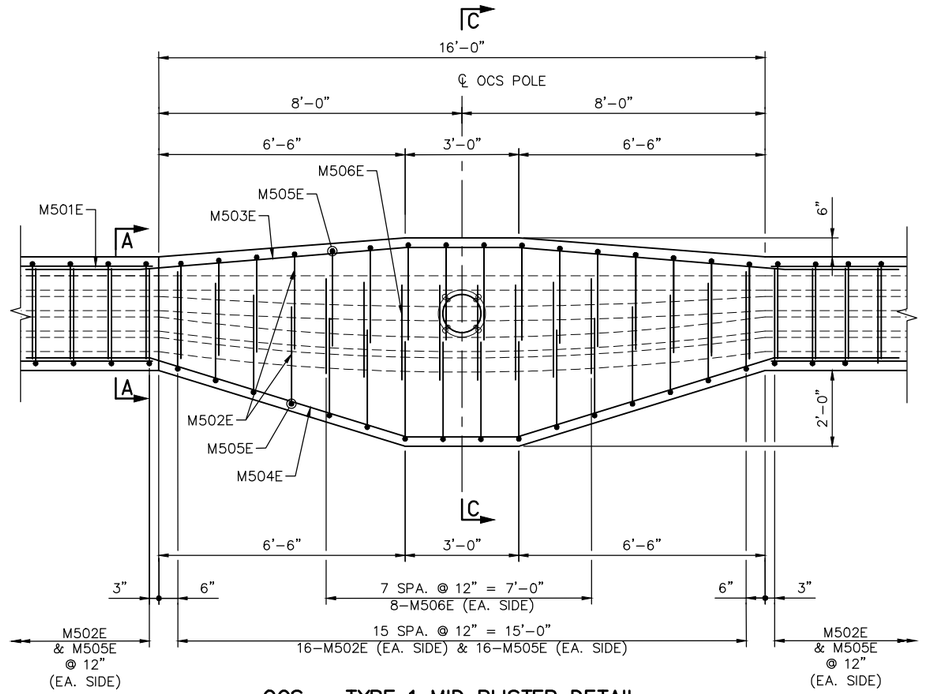

OCS – TYPE 1 MID BLISTER DETAIL

(AT STA. 58+06, STA. 58+81, & STA. 59+63)

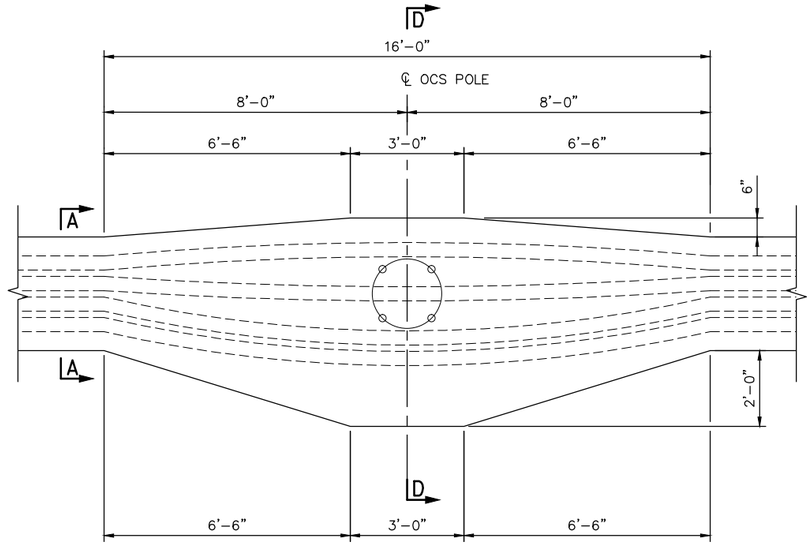

OCS – TYPE 2 MID BLISTER DETAIL

(AT STA. 59+43)

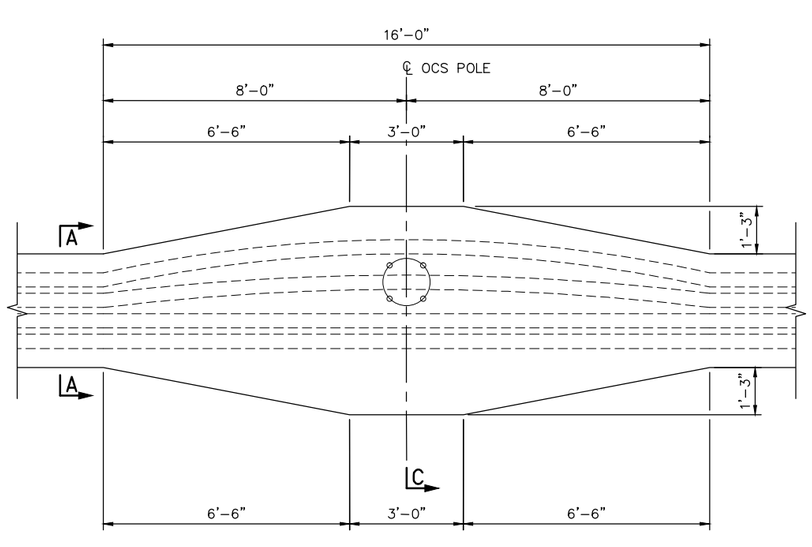

OCS – TYPE 3 MID BLISTER DETAIL

(AT STA. 60+24, STA. 60+84, & 61+36)

NOTES:

FOR OCS TYPES 2 AND 3 REINFORCEMENT LAYOUT, SEE OCS TYPE 1 THIS SHEET.

SEE SHEET 104 FOR SECTIONS "A–A, "B–B", "C–C", AND "D–D".

NO.	DATE	BY	CHECK	DESIGN	REVISION / SUBMITTAL

DESIGNED BY: KR | CHECKED BY: KJK
DRAWN BY: MSK | CHECKED BY: KJK

AECOM Kimley»Horn

90% SUBMISSION - 01/22/16

METROPOLITAN COUNCIL

SOUTHWEST Green Line LRT Extension

CIVIL - VOLUME 4G
5TH AVENUE AND 7TH STREET
BRIDGE 27C18
SUPERSTRUCTURE REINFORCEMENT 18

DISCIPLINE: STRUCTURES
SHEET NAME: CBR27C18-BRG-SUP-026-3

SHEET 103 OF 148

Jan. 18 2016 03:10 pm v:\3400_ADC\CAD\SEGMENT E4\PLAN SHEETS\STRUCTURES\27C18\CBR27C18-BRG-SUP-026-3.dwg By: Victor.Madrid

BILL OF REINFORCEMENT FOR DUCT BANK & MIDDLE BLISTER (FOR ENTIRE BRIDGE)

BAR	NO.	LENGTH	SHAPE	LOCATION
M501E	-	60'-0"	STR.	DUCT BANK HORIZ.
M502E	-	3'-1"	BENT	DUCT BANK VERT.
M503E	-	21'-9"	BENT	MID PEDESTAL BLISTER
M504E	-	22'-4"	BENT	MID PEDESTAL BLISTER
M505E	-	2'-1"	BENT	DUCT BANK DOWEL
M506E	-	2'-0"	STR.	MID BLISTER HORIZ.
M507E	-	2'-7"	BENT	PULL BOX VERT. DOWEL

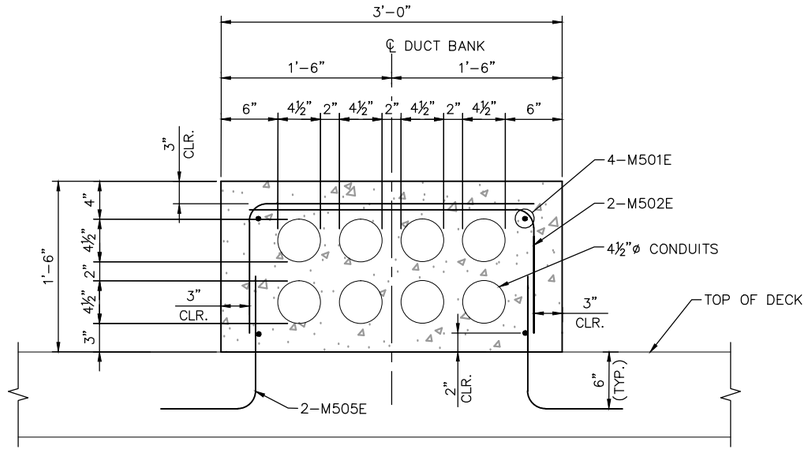

SECTION A–A

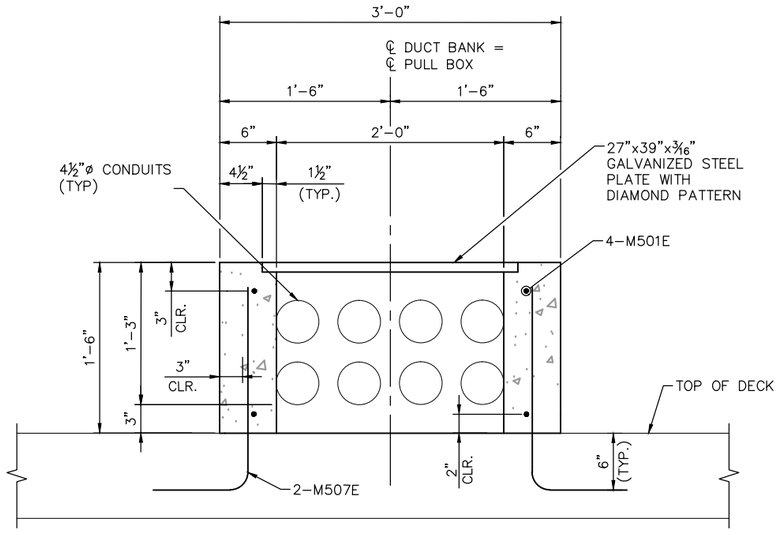

SECTION B–B PULL BOX DETAIL

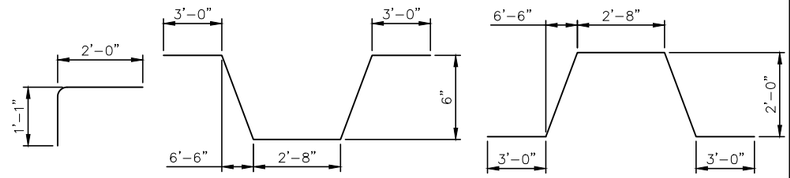

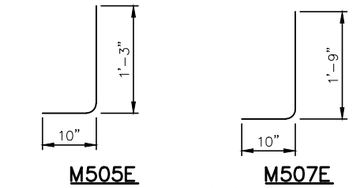

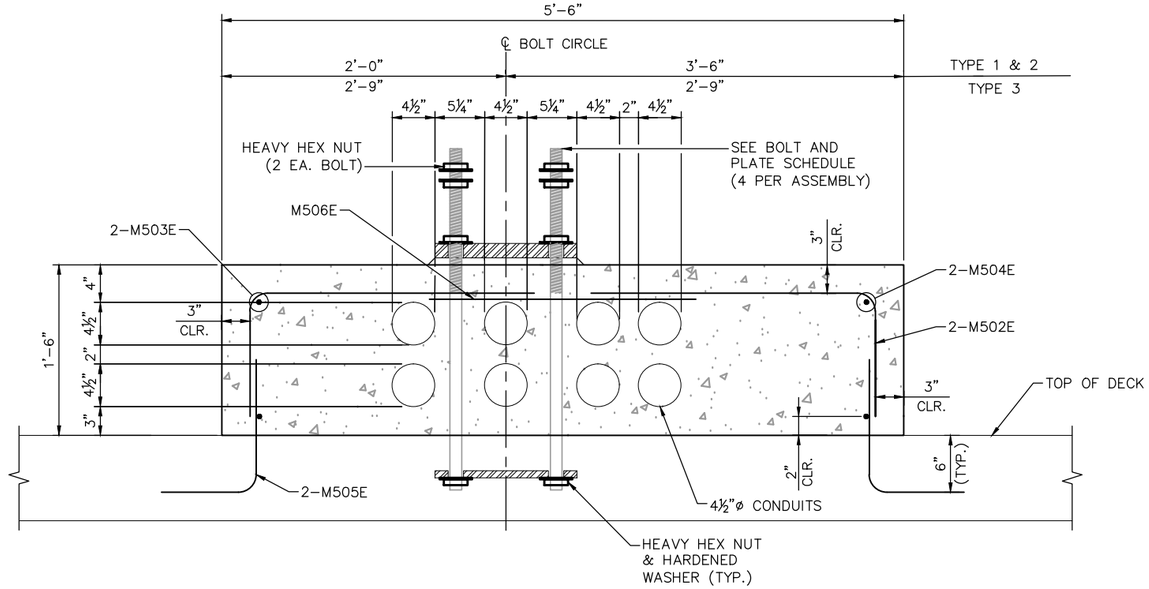

SECTION C–C

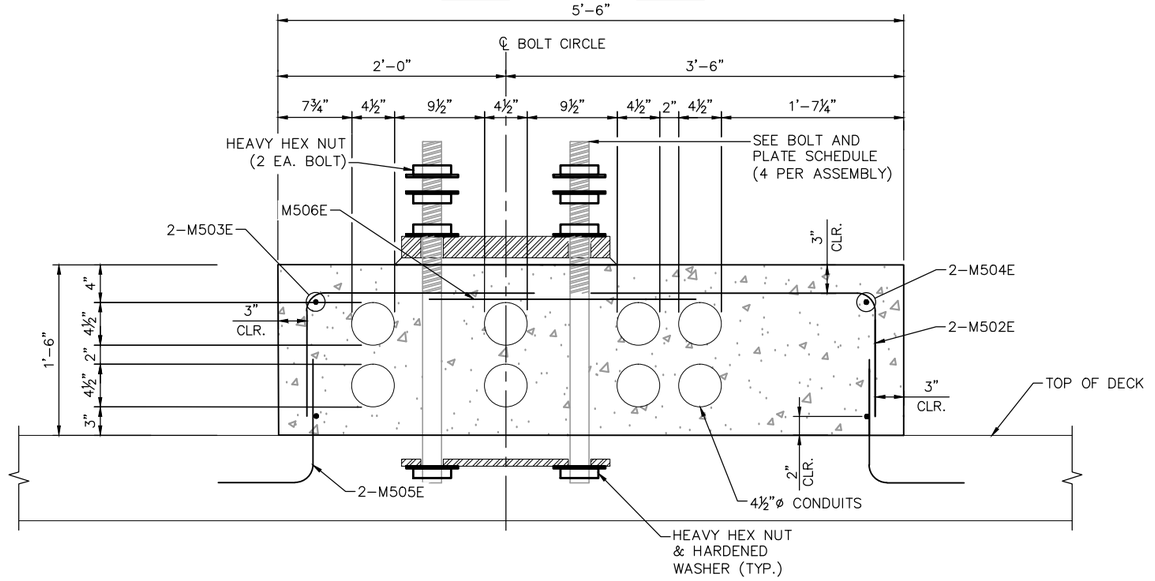

SECTION D–D

NO.	DATE	BY	CHECK	DESIGN	REVISION / SUBMITTAL

DESIGNED BY: KR | CHECKED BY: KJK
DRAWN BY: MSK | CHECKED BY: KJK

AECOM Kimley»Horn

90% SUBMISSION - 01/22/16

METROPOLITAN COUNCIL

SOUTHWEST Green Line LRT Extension

CIVIL - VOLUME 4G
5TH AVENUE AND 7TH STREET
BRIDGE 27C18
SUPERSTRUCTURE REINFORCEMENT 19

DISCIPLINE: STRUCTURES

SHEET NAME: CBR27C18-BRG-SUP-026-4

SHEET 104 OF 148

Jan, 18 2016 03:11 pm v:\3400_ADC\CAD\SEGMENT E4\PLAN SHEETS\STRUCTURES\27C18\CBR27C18-BRG-SUP-026-3.dwg By: Victor.Madrid

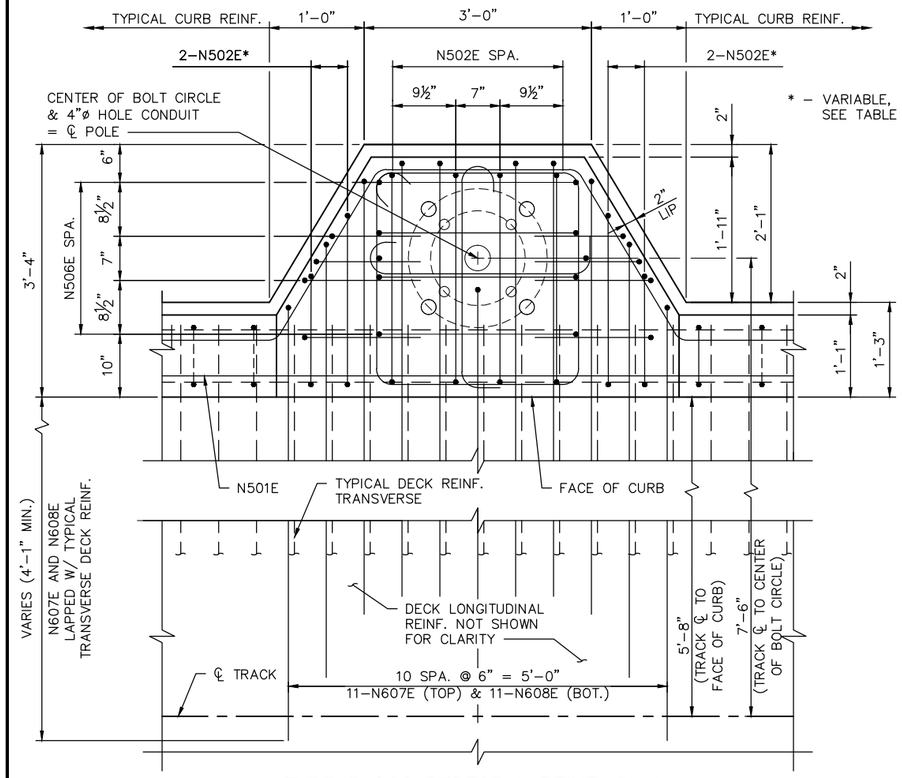

TYPE 3 OCS PEDESTAL REINF. PLAN

(UNIT 3)

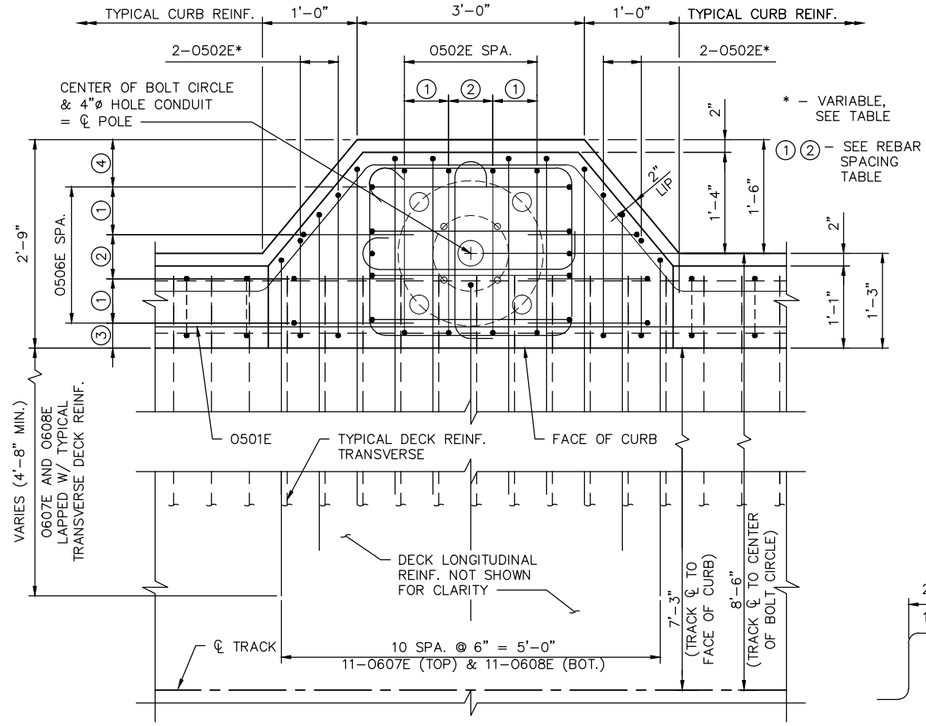

TYPE 1 OCS PEDESTAL REINF. PLAN

(UNIT 1 & 2)

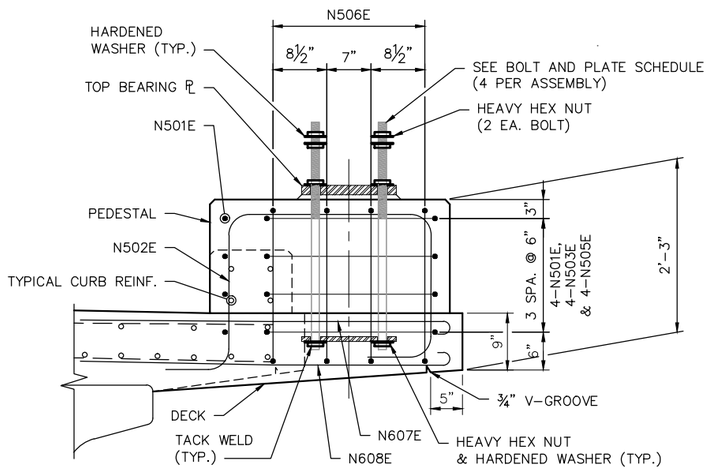

OCS POLE PEDESTAL ELEVATION

(UNIT 3)

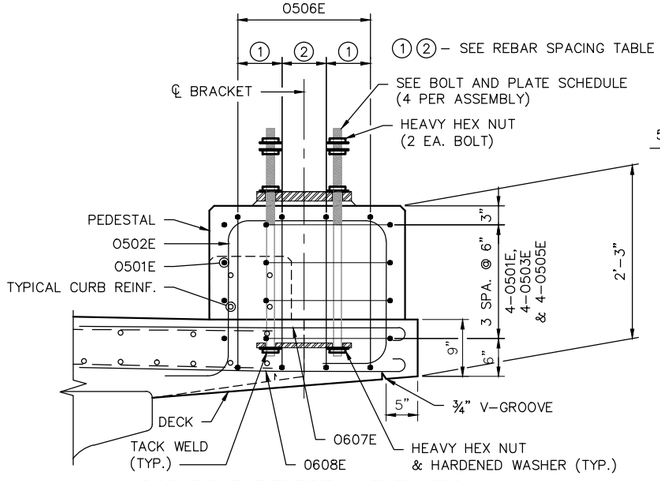

OCS POLE PEDESTAL ELEVATION

(UNIT 1 & 2)

BILL OF REINFORCEMENT FOR OCS PEDESTAL (TYPE 3)

BAR	NO. **	LENGTH	SHAPE	LOCATION
N501E	4	10'-6"	STR.	FRONT FACE PEDESTAL
N502E	8	7'-6"	BENT	PEDESTAL *STIRRUP
N503E	4	11'-7"	BENT	PEDESTAL *STIRRUP
N504E	8	4'-3"	BENT	PEDESTAL TIE
N505E	4	18'-6"	BENT	PEDESTAL STIRRUP
N506E	4	9'-9"	BENT	PEDESTAL TRANS. STIRRUP
N607E	11	7'-8"	BENT	DECK TOP LAP
N608E	11	7'-8"	BENT	DECK BOT. LAP

* - LENGTH BASED ON MIDDLE BAR *2'-0" DIMENSION.
** - QUANTITY SHOWN IS FOR EACH PEDESTAL.

BILL OF REINFORCEMENT FOR OCS PEDESTAL (TYPE 1)

BAR	NO. **	LENGTH	SHAPE	LOCATION
O501E	4	10'-6"	STR.	FRONT FACE PEDESTAL
O502E	8	7'-3"	BENT	PEDESTAL *STIRRUP
O503E	4	10'-5"	BENT	PEDESTAL *STIRRUP
O504E	8	3'-8"	BENT	PEDESTAL TIE
O505E	4	15'-4"	BENT	PEDESTAL STIRRUP
O506E	4	9'-9"	BENT	PEDESTAL TRANS. STIRRUP
O607E	11	7'-8"	BENT	DECK TOP LAP
O608E	11	7'-8"	BENT	DECK BOT. LAP

* - LENGTH BASED ON MIDDLE BAR *1'-9" DIMENSION.
** - QUANTITY SHOWN IS FOR EACH PEDESTAL.

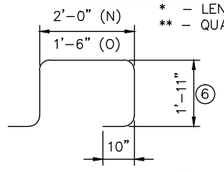

⑥ LENGTH IS BASED ON A 9" DECK SLAB THICKNESS AND A 1'-6" PEDESTAL HEIGHT.

REBAR SPACING FOR PEDESTAL (TYPE 1)

B.C.	①	②	③	④
12	4"	1'-1"	4 1/2"	7 1/2"
15	7"	7"	4 1/2"	7 1/2"
16	7"	7"	4 1/2"	7 1/2"
23	3"	7"	8 1/2"	11 1/2"

N502E, O502E

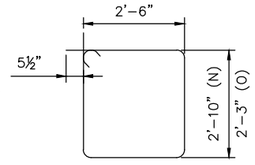

N503E, O503E

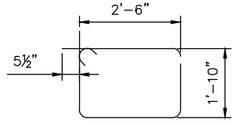

N506E, O506E

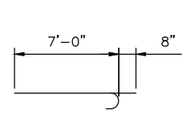

N607E, N608,
0607, 0608E

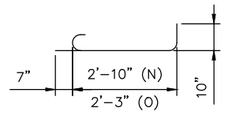

N504E, O504E

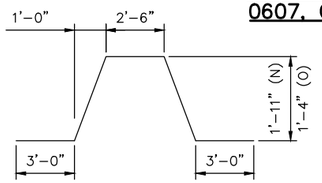

N505E, O505E

NO.	DATE	BY	CHECK	DESIGN	REVISION / SUBMITTAL

DESIGNED BY: KR CHECKED BY: KJK
DRAWN BY: MSK CHECKED BY: KJK

AECOM Kimley»Horn

90% SUBMISSION - 01/22/16

METROPOLITAN COUNCIL

SOUTHWEST Green Line LRT Extension

CIVIL - VOLUME 4G
5TH AVENUE AND 7TH STREET
BRIDGE 27C18
SUPERSTRUCTURE REINFORCEMENT 20

DISCIPLINE: STRUCTURES
SHEET NAME: CBR27C18-BRG-SUP-027

SHEET 105 OF 148

Jan, 18 2016 03:11 pm V:\3400_ADC\CAD\SEGMENT E4\PLAN SHEETS\STRUCTURES\27C18\CBR27C18-BRG-SUP-027.dwg By: Victor.Madrid

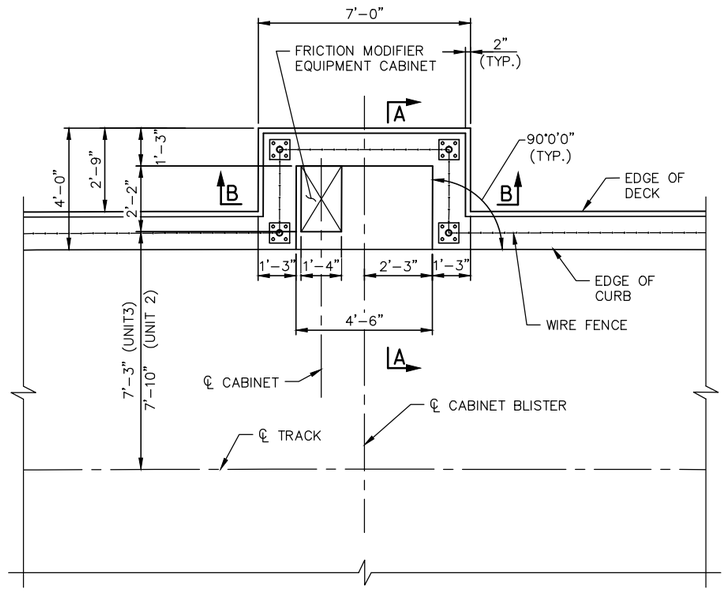

FRICTION MODIFIER

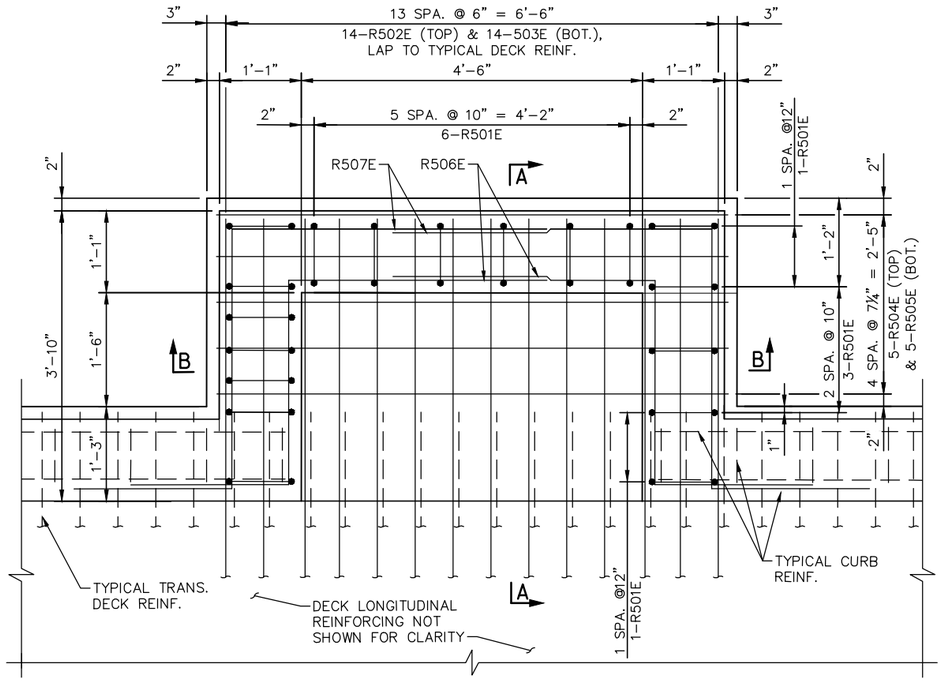

REINF. DETAIL – FRICTION MODIFIER

BILL OF REINFORCEMENT FOR RAIL LUBRICATOR (R_ _)

BAR	NO.	LENGTH	SHAPE	LOCATION
R501E	16	5'-7"	BENT	CURB @ RAIL LUBR. (RL)
R502E	14	7'-3"	BENT	DECK TOP TRANS. (RL)
R503E	14	7'-3"	BENT	DECK BOT. TRANS. (RL)
R504E	5	6'-8"	BENT	DECK TOP LONG. (RL)
R505E	5	6'-8"	STR.	DECK BOT. LONG.. (RL)
R506E	4	10'-6"	BENT	CURB CONNECT
R507E	4	9'-3"	BENT	CURB CONNECT

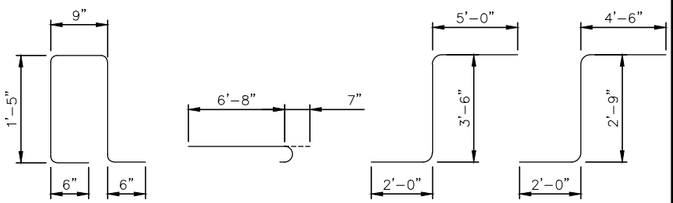

R501E R502E, R503E R506E R507E

NOTES:

1. STRAY CURRENT COLLECTOR CABLE. SEE NOTE 6 ON SHEET 6.
2. LONGITUDINAL COLLECTOR GROUND WIRE. SEE SYSTEM WIDE ELECTRICAL PLANS.
3. WIRE FENCE (DESIGN W–1) SEE SHEET 113.

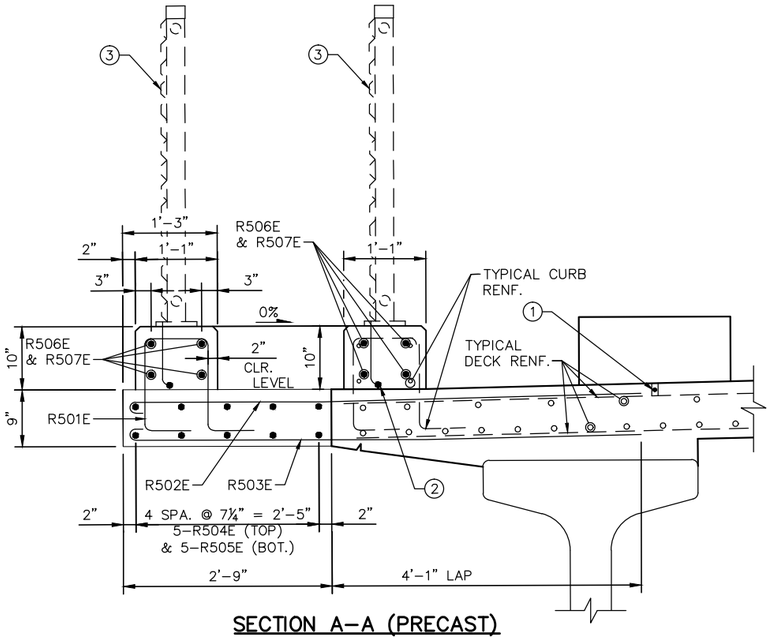

SECTION A–A (PRECAST)

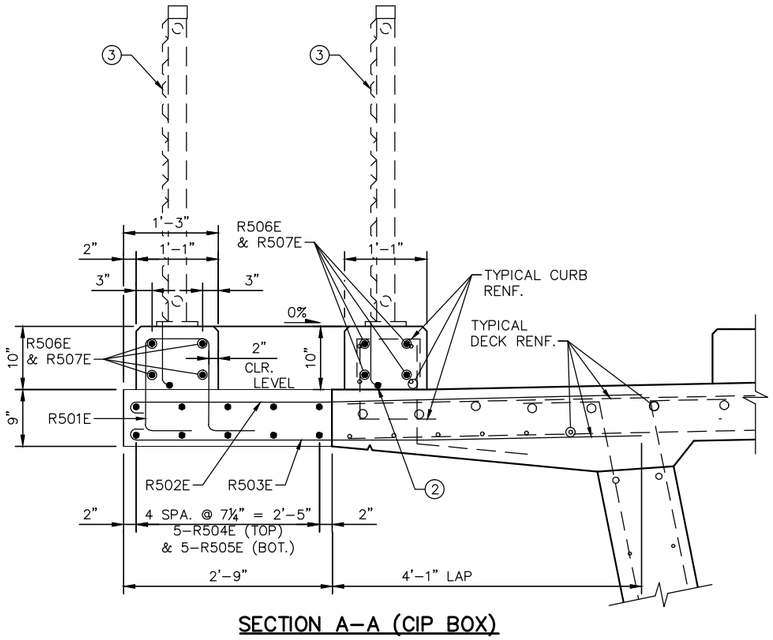

SECTION A–A (CIP BOX)

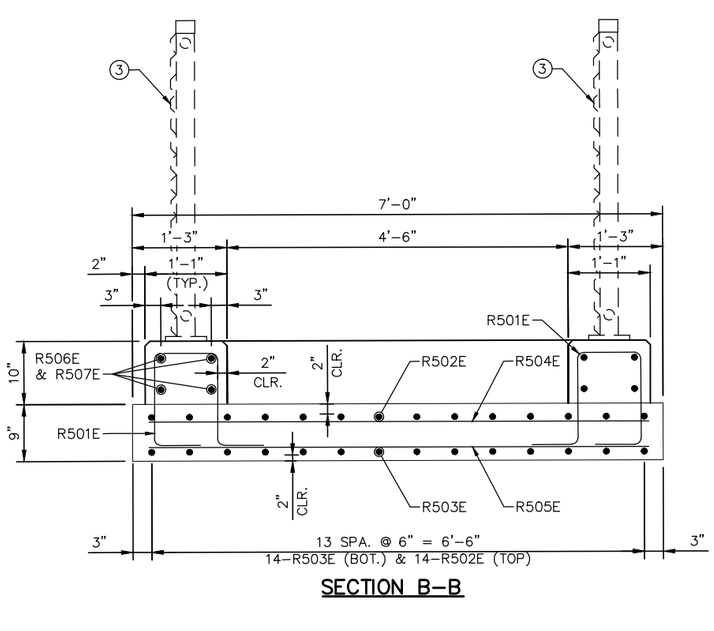

SECTION B–B

NO.	DATE	BY	CHECK	DESIGN	REVISION / SUBMITTAL

DESIGNED BY: KR CHECKED BY: KJK
DRAWN BY: MSK CHECKED BY: KJK

AECOM Kimley»Horn

90% SUBMISSION - 01/22/16

METROPOLITAN COUNCIL

SOUTHWEST Green Line LRT Extension

CIVIL - VOLUME 4G
5TH AVENUE AND 7TH STREET
BRIDGE 27C18
SUPERSTRUCTURE REINFORCEMENT 21

DISCIPLINE: STRUCTURES
SHEET NAME: CBR27C18-BRG-SUP-026-1

SHEET 106 OF 148

Jan, 18 2016 03:12 pm V:\3400_ADC\CAD\SEGMENT E4\PLAN SHEETS\STRUCTURES\27C18\CBR27C18-BRG-SUP-026-1.dwg By: Victor.Madrid

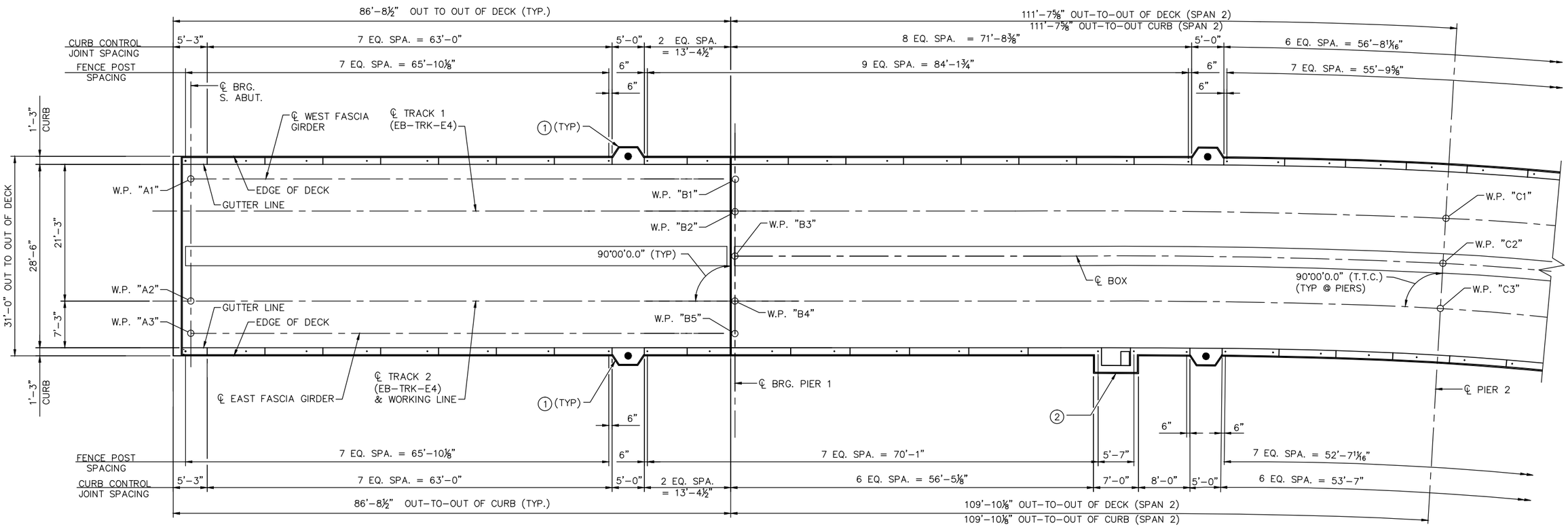

PLAN
(SPANS 1 & 2)

NOTES:

1. SEE SHEET 114 FOR SPECIAL FENCE DESIGN AT OCS BLISTERS.
2. SEE SHEET 106 FOR ADDITIONAL FENCE LAYOUT DETAILS AT FRICTION MODIFIER BLISTER.

NO.	DATE	BY	CHECK	DESIGN	REVISION / SUBMITTAL

DESIGNED BY: KR | CHECKED BY: KJK
DRAWN BY: MSK | CHECKED BY: KJK

AECOM Kimley»Horn

90% SUBMISSION - 01/22/16

METROPOLITAN COUNCIL

SOUTHWEST Green Line LRT Extension

CIVIL - VOLUME 4G
5TH AVENUE AND 7TH STREET BRIDGE 27C18
FENCE LAYOUT 1

DISCIPLINE: STRUCTURES

SHEET NAME: CBR27C18-BRG-SUP-029

SHEET 107 OF 148

Jan. 18 2016 03:12 pm v:\3400_ADC\CAD\SEGMENT E4\PLAN SHEETS\STRUCTURES\27C18\CBR27C18-BRG-SUP-029.dwg By: Victor.Madrid

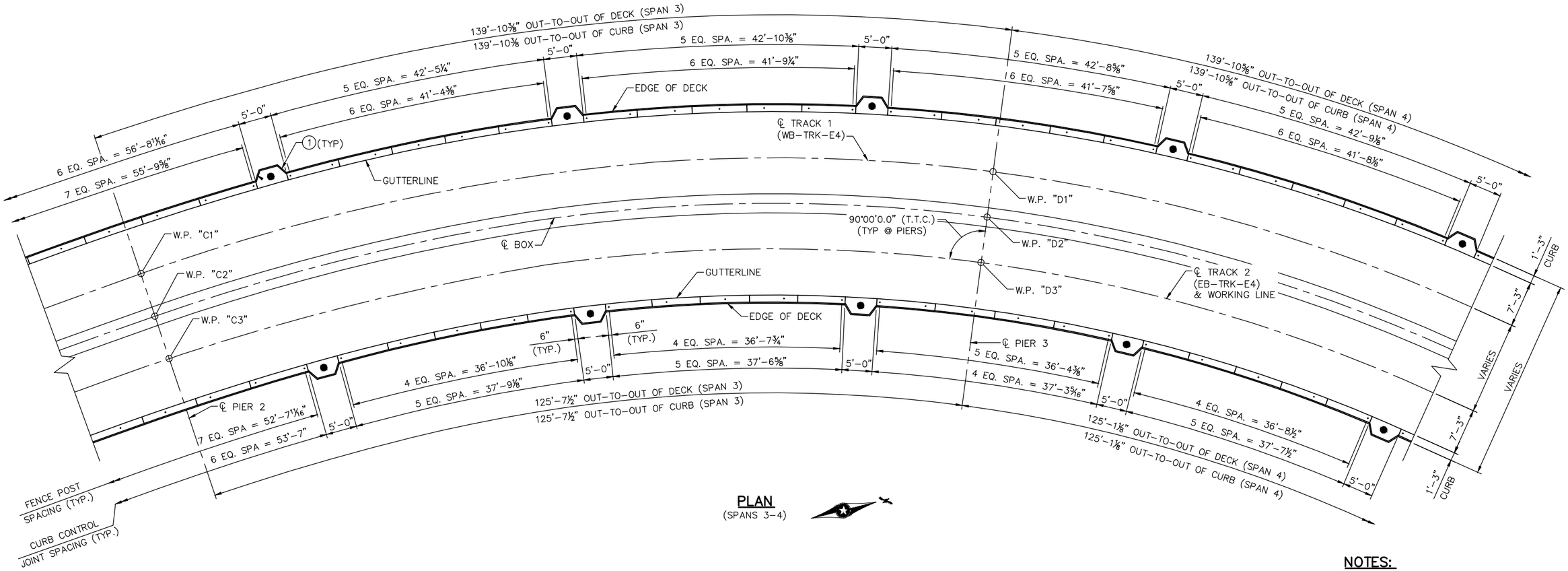

PLAN
(SPANS 3-4)

NOTES:

1. SEE SHEET 114 FOR SPECIAL FENCE DESIGN AT OCS BLISTERS.

NO.	DATE	BY	CHECK	DESIGN	REVISION / SUBMITTAL

DESIGNED BY: KJK CHECKED BY: DJL
DRAWN BY: MSK CHECKED BY: DJL

AECOM Kimley»Horn

90% SUBMISSION - 01/22/16

METROPOLITAN COUNCIL

SOUTHWEST Green Line LRT Extension

CIVIL - VOLUME 4G
5TH AVENUE AND 7TH STREET
BRIDGE 27C18
FENCE LAYOUT 2

DISCIPLINE: STRUCTURES
SHEET NAME: CBR27C18-BRG-SUP-030

SHEET 108 OF 148

Jan, 18 2016 03:13 pm v:\3400_ADC\CAD\SEGMENT E4\PLAN SHEETS\STRUCTURES\27C18\CBR27C18-BRG-SUP-030.dwg By: Victor.Madrid

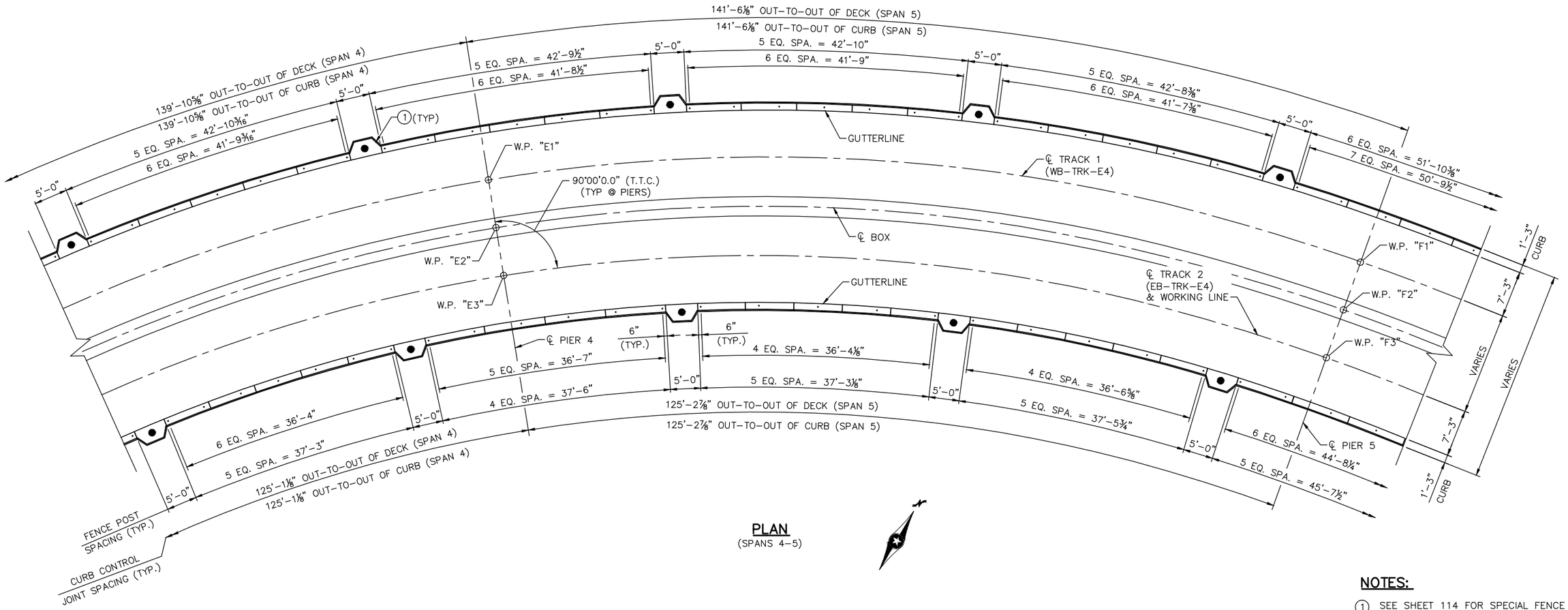

PLAN
(SPANS 4-5)

NOTES:

1. SEE SHEET 114 FOR SPECIAL FENCE DESIGN AT OCS BLISTERS.

NO.	DATE	BY	CHECK	DESIGN	REVISION / SUBMITTAL

DESIGNED BY: KJK | CHECKED BY: DJL
DRAWN BY: MSK | CHECKED BY: DJL

AECOM Kimley»Horn

90% SUBMISSION - 01/22/16

METROPOLITAN COUNCIL

SOUTHWEST Green Line LRT Extension

CIVIL - VOLUME 4G
5TH AVENUE AND 7TH STREET
BRIDGE 27C18
FENCE LAYOUT 3

DISCIPLINE: STRUCTURES

SHEET NAME: CBR27C18-BRG-SUP-031

SHEET 109 OF 148

Jan, 18 2016 03:13 pm V:\3400_ADC\CAD\SEGMENT E4\PLAN SHEETS\STRUCTURES\27C18\CBR27C18-BRG-SUP-031.dwg By: Victor.Madrid

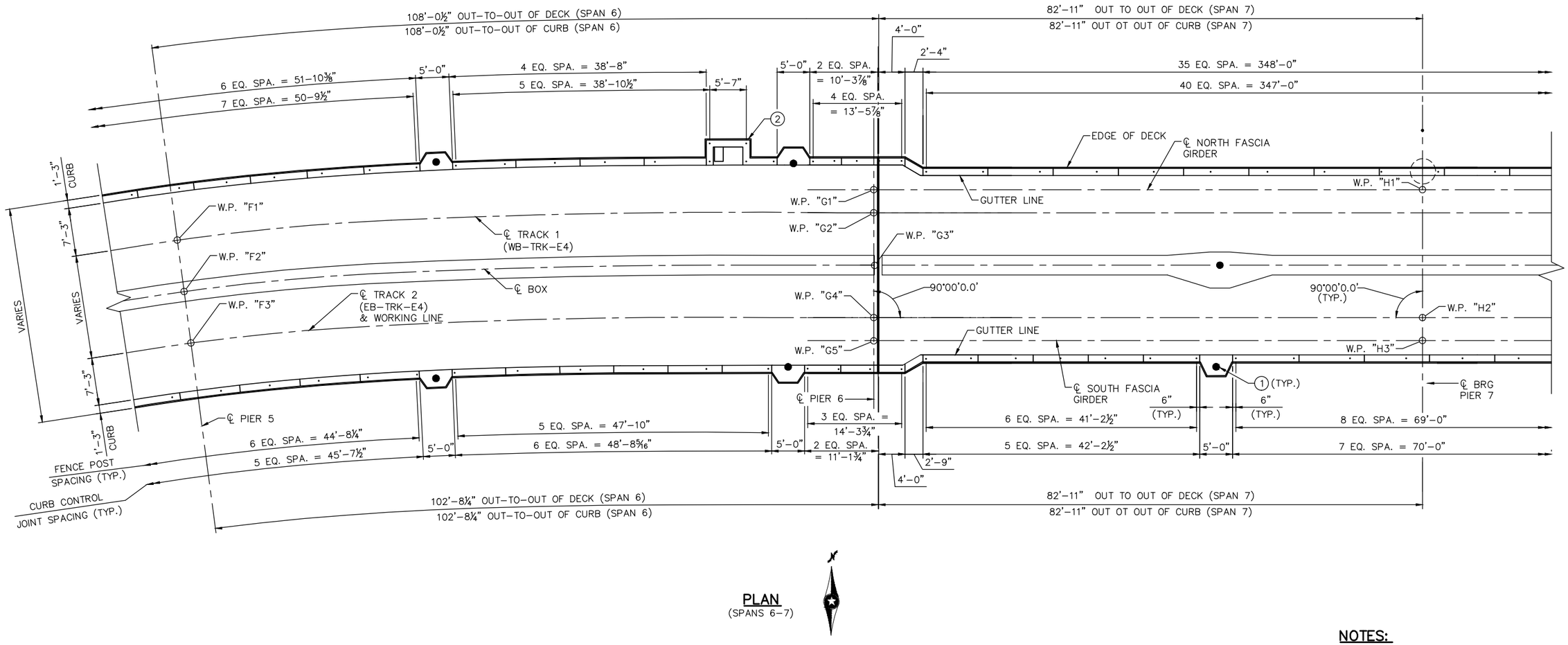

PLAN
(SPANS 6-7)

NOTES:

1. SEE SHEET 114 FOR SPECIAL FENCE DESIGN AT OCS BLISTERS.
2. SEE SHEET 106 FOR ADDITIONAL FENCE LAYOUT DETAILS AT FRICTION MODIFIER BLISTER.

NO.	DATE	BY	CHECK	DESIGN	REVISION / SUBMITTAL

DESIGNED BY: KJK | CHECKED BY: DJL
DRAWN BY: MSK | CHECKED BY: DJL

AECOM Kimley»Horn

90% SUBMISSION - 01/22/16

METROPOLITAN COUNCIL

SOUTHWEST Green Line LRT Extension

CIVIL - VOLUME 4G
5TH AVENUE AND 7TH STREET BRIDGE 27C18
FENCE LAYOUT 4

DISCIPLINE: STRUCTURES

SHEET NAME: CBR27C18-BRG-SUP-032

SHEET 110 OF 148

Jan. 18 2016 03:14 pm V:\3400_ADC\CAD\SEGMENT E4\PLAN SHEETS\STRUCTURES\27C18\CBR27C18-BRG-SUP-032.dwg By: Victor.Madrid

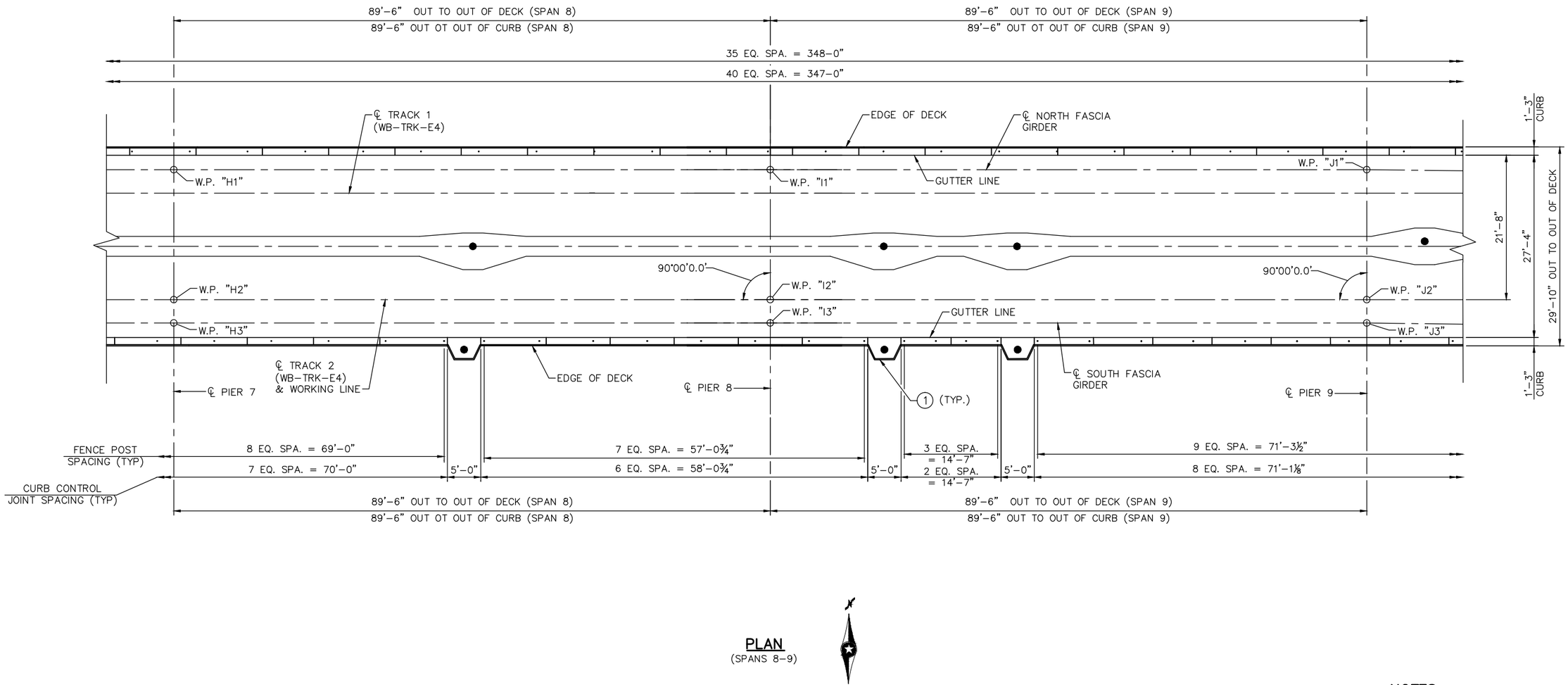

PLAN
(SPANS 8-9)

NOTES:

1. SEE SHEET 114 FOR SPECIAL FENCE DESIGN AT OCS BLISTERS.

NO.	DATE	BY	CHECK	DESIGN	REVISION / SUBMITTAL

DESIGNED BY: KR | CHECKED BY: KJK
DRAWN BY: MSK | CHECKED BY: KJK

AECOM Kimley»Horn

90% SUBMISSION - 01/22/16

METROPOLITAN COUNCIL

SOUTHWEST Green Line LRT Extension

CIVIL - VOLUME 4G
5TH AVENUE AND 7TH STREET
BRIDGE 27C18
FENCE LAYOUT 5

DISCIPLINE: STRUCTURES
SHEET NAME: CBR27C18-BRG-SUP-033

SHEET 111 OF 148

Jan, 18 2016 03:16 pm V:\3400_ADC\CAD\SEGMENT E4\PLAN SHEETS\STRUCTURES\27C18\CBR27C18-BRG-SUP-033.dwg By: Victor.Madrid

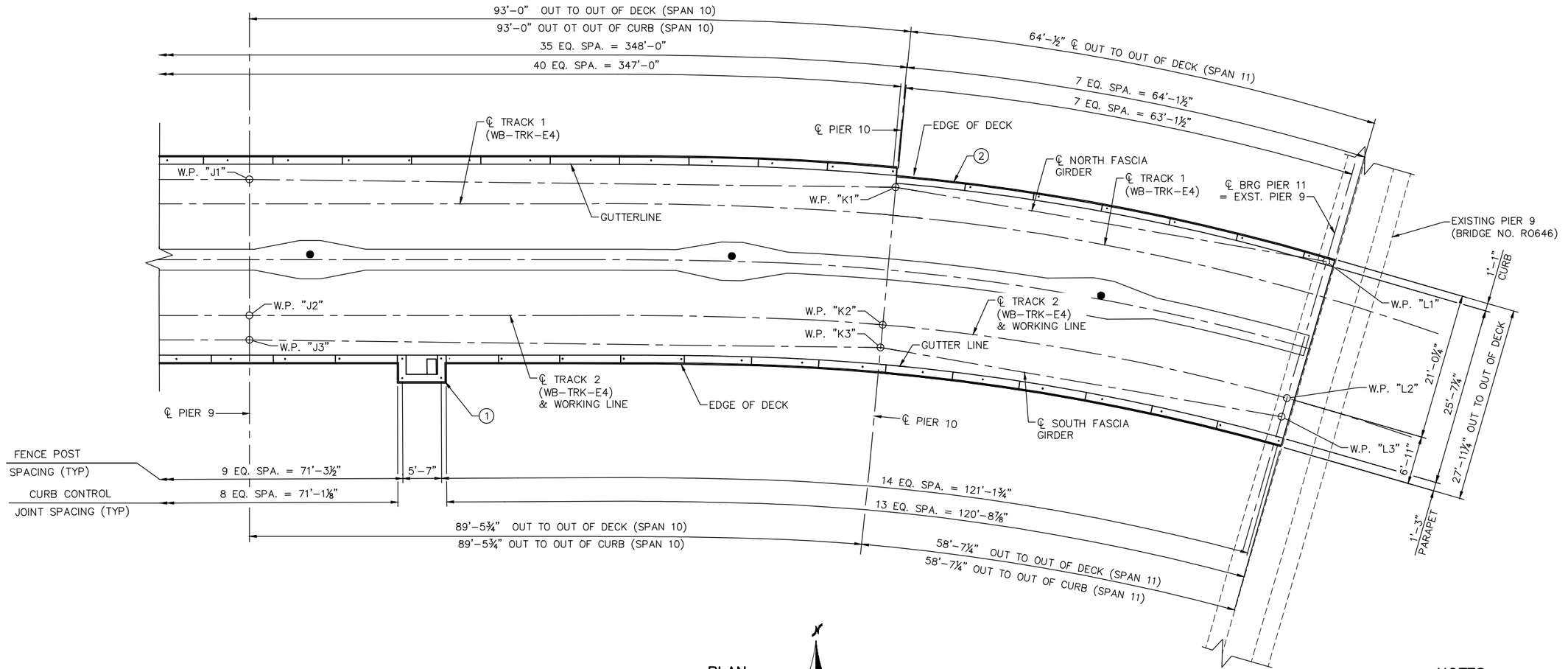

PLAN
(SPANS 9-10)

NOTES:

1. SEE SHEET 106 FOR ADDITIONAL FENCE LAYOUT DETAILS AT FRICTION MODIFIER BLISTER.
2. SEE SHEET 115 FOR SIDE MOUNTED FENCE DETAIL FOR NORTH SIDE OF SPAN 11

NO.	DATE	BY	CHECK	DESIGN	REVISION / SUBMITTAL

DESIGNED BY: KR CHECKED BY: KJK
DRAWN BY: MSK CHECKED BY: KJK

AECOM Kimley»Horn

90% SUBMISSION - 01/22/16

METROPOLITAN COUNCIL

SOUTHWEST Green Line LRT Extension

CIVIL - VOLUME 4G
5TH AVENUE AND 7TH STREET BRIDGE 27C18
FENCE LAYOUT 6

DISCIPLINE: STRUCTURES

SHEET NAME: CBR27C18-BRG-SUP-034

SHEET 112 OF 148

Jan, 18 2016 03:18 pm V:\3400_ADC\CAD\SEGMENT E4\PLAN SHEETS\STRUCTURES\27C18\CBR27C18-BRG-SUP-034.dwg By: Victor.Madrid

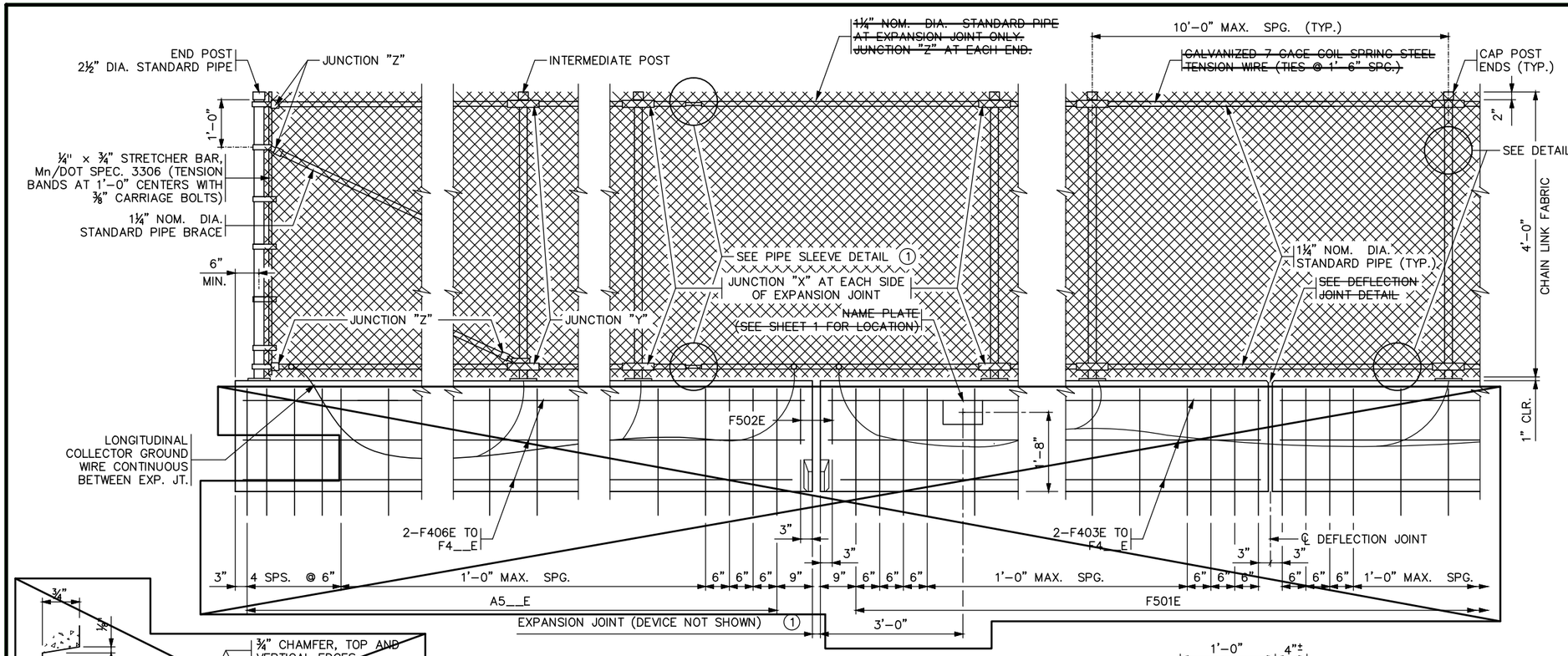

Ⓐ INSIDE ELEVATION OF RAILING

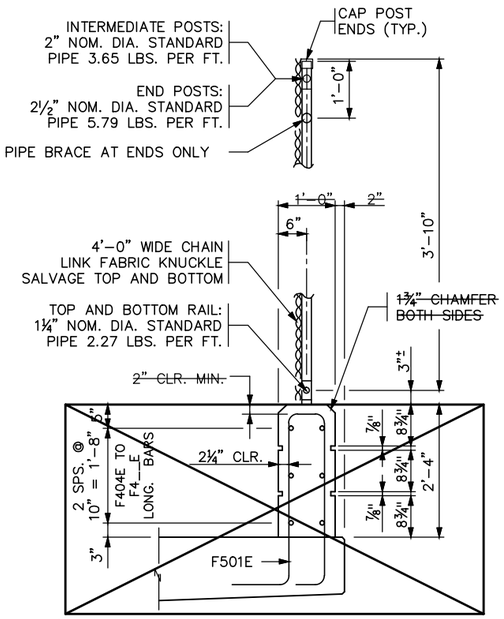

Ⓐ TYPICAL SECTION THROUGH FENCE

INTERMEDIATE POST SHOWN

SHEET MODIFICATION:
Ⓐ DENOTES MODIFICATION TO STANDARD SHEET

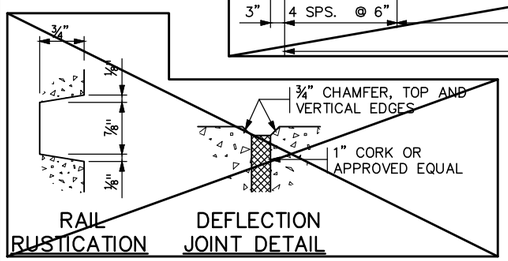

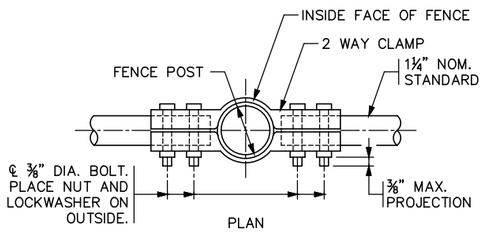

2 WAY CLAMP BENDING TABLE	
GRADE OF FENCE	Ø
0° TO 2°	0°
2° TO 6°	4°
6° TO 10°	8°

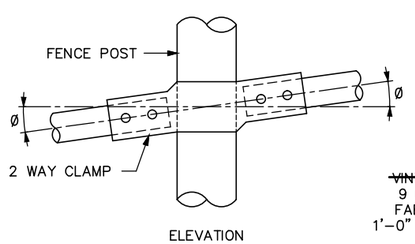

JUNCTION "X"

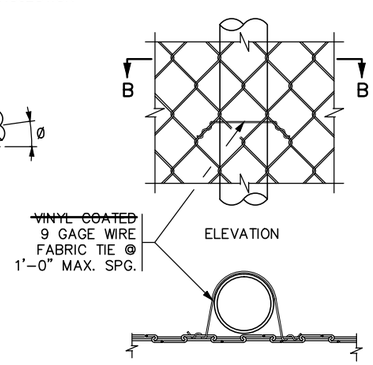

DETAIL "A"

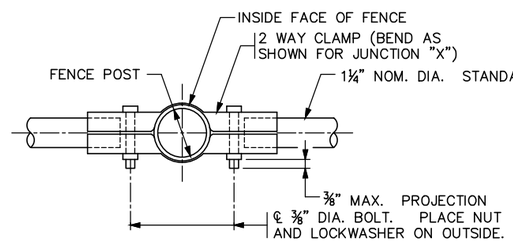

JUNCTION "Y"

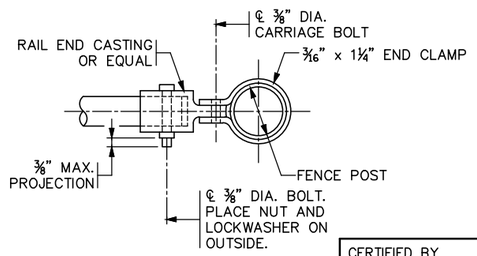

JUNCTION "Z"

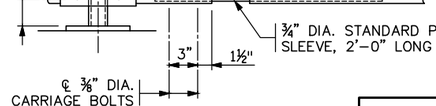

PIPE SLEEVE DETAIL (1)

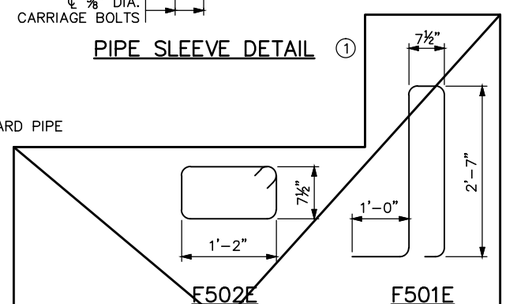

BILL OF REINFORCEMENT FOR PARAPET				
BAR	NO.	LENGTH	SHAPE	LOCATION
F501E		7'-3"		RAIL BASE VERTICAL
F502E		4'-6"		RAIL BASE VERTICAL
F403E			——	RAIL BASE LONGITUDINAL
F404E			——	RAIL BASE LONGITUDINAL

GENERAL NOTES

Ⓐ SEE SHEET 116 FOR CURB DIMENSIONS, REINFORCEMENT AND NOTES.

~~LENGTH OF "TYPE P-1 RAILING CONCRETE (3Y46 OR 3Y46A)" FOR PAYMENT SHALL BE MEASURED BETWEEN THE OUTSIDE FACES OF THE CONCRETE RAIL.~~

Ⓐ LENGTH OF "WIRE FENCE DESIGN W-1" ~~FOR PAYMENT~~ SHALL BE MEASURED BETWEEN THE CENTERS OF END RAILPOSTS.

~~CONCRETE RAILING = 350 LBS./FT. (0.086 CU. YDS./FT.)~~

Ⓐ FOR FENCE POST ANCHORAGES SEE STANDARD DETAIL B905.

~~MAXIMUM SPACING OF DEFLECTION JOINTS SHALL BE 20 FT. FOR SPACING OF FENCE POST, JOINTS AND ELECTRICAL GROUNDS, SEE SUPERSTRUCTURE SHEETS.~~

FENCE POSTS AND FENCE POST ANCHORAGES SHALL BE SET VERTICAL, UNLESS OTHERWISE NOTED.

℄ OF FENCE POST ANCHORAGE SHALL BE A MINIMUM OF 6" FROM JOINTS.

END POSTS AND BRACING SHALL BE AT 500 FT. MAXIMUM INTERVALS.

~~ALL POSTS SHALL HAVE A MEANS TO SECURELY HOLD THE TOP TENSION WIRE IN POSITION AND ALLOW FOR THE REMOVAL AND REPLACEMENT OF A POST WITHOUT DAMAGING THE TOP WIRE.~~

WIRE TIES MAY BE 9 GAGE GALVANIZED STEEL OR 0.179" MIN. ALUMINUM ALLOY CONFORMING TO A.S.T.M. B211, ALLOY 1100-H18. ~~USE 12½ GAGE GALVANIZED HOG RINGS FOR TENSION WIRE TIES.~~

~~ALL MATERIAL IN THE CONCRETE BASE AND END POST IS INCLUDED IN THE SUPERSTRUCTURE QUANTITIES.~~

SEE SPECIAL PROVISIONS FOR REQUIREMENTS NOT INCLUDED ON THIS SHEET ~~AND FOR BASIS OF PAYMENT.~~

(1) PROVIDE PIPE SLEEVE IN SPAN BETWEEN THE VERTICAL POSTS AT EXPANSION JOINT. SEE SUPERSTRUCTURE SHEETS FOR LOCATION.

REVISED: 04-17-2013

APPROVED: DECEMBER 18, 2003

Daniel L. Worzyn
STATE BRIDGE ENGINEER

CERTIFIED BY _____ LICENSED PROFESSIONAL ENGINEER _____ DATE

NAME: LIC. NO. #####

TITLE: WIRE FENCE (DESIGN W-1) Ⓐ

DES: KR	DR: MSK	APPROVED:
CHK: KJK	CHK: KJK	

SHEET NO. 113 OF 148 SHEETS

FIG. 5-397.119 (MOD.)

BRIDGE NO. 27C18

Jan. 18 2016 03:19 pm V:\3400_ADC\CAD\SEGMENT E4\PLAN SHEETS\STRUCTURES\27C18\CBR27C18-BRG-RAL-001.dwg By: Victor.Madrid

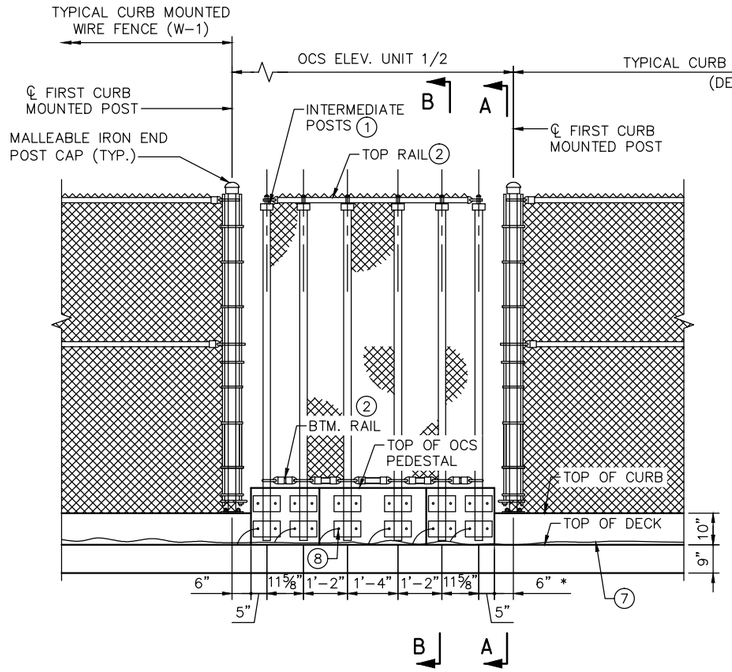

OUTSIDE DEVELOPED ELEVATION OF WIRE FENCE (OCS BLISTER TYPE 1-2) (UNITS 1-2)

* DIMENSIONS ARE ALONG OUTSIDE FACE OF CURB/OCS BLISTER

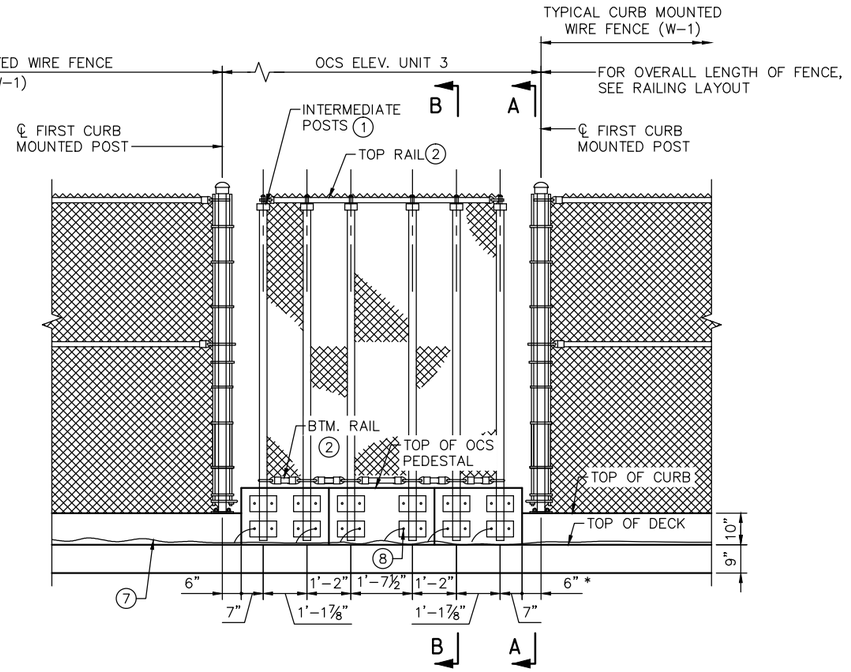

OUTSIDE ELEVATION OF WIRE FENCE (OC BLISTER TYPE 3) (UNIT 3)

* DIMENSIONS ARE ALONG OUTSIDE FACE OF CURB/OCS BLISTER

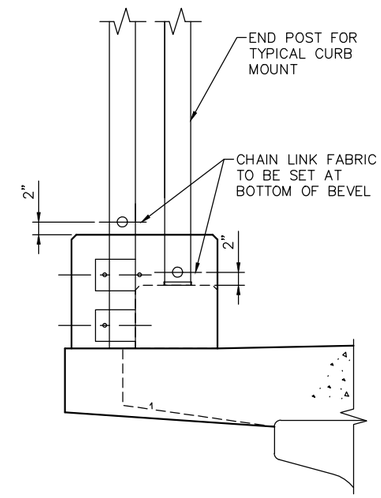

SECTION A-A

AT SIDE MOUNTED END FENCE POST (TAKEN @ END OF OCS BLISTER (TYP.)

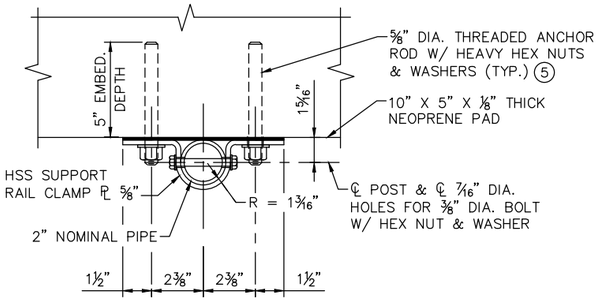

HSS CLAMP CONNECTION DETAIL @ INTERIOR SIDE MOUNTED FENCE

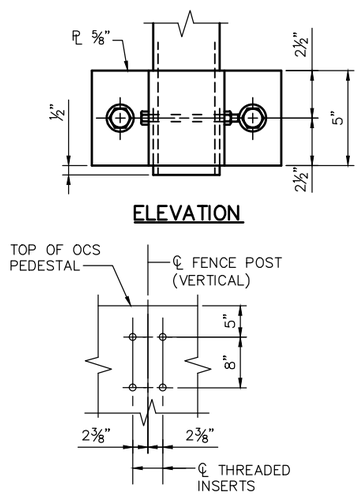

BOLT SETTING DETAIL

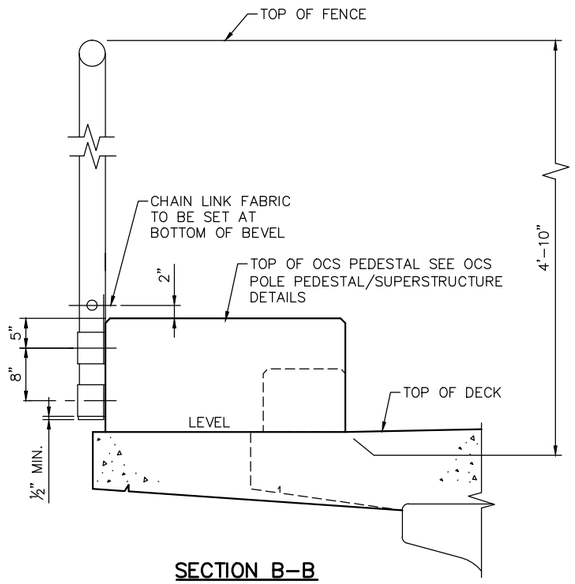

SECTION B-B

NOTES:

1. GALVANIZED 2" NOMINAL PIPE PER MNDOT SPEC. 3306.
2. GALVANIZED HSS 1.660 X 0.140 PER MNDOT SPEC. 3306.
3. 9 GAUGE GALVANIZED STEEL TIE WIRES ATTACH CHAIN LINK FABRIC TO HSS.
4. 9 GAUGE GALVANIZED STEEL CHAIN LINK FABRIC, 2" MESH, KNUCKLE SELVAGE TOP AND BOTTOM.
5. ⅝" DIA THREADED ANCHOR RODS MUST BE ASTM-A36. EMBED THREADED RODS INTO PARAPET WALL WITH AN APPROVED EPOXY ANCHORAGE SYSTEM. MINIMUM EMBEDMENT DEPTH IS 5". ANCHORAGE SYSTEM CHOSEN MUST BE ABLE TO ACHIEVE AN ULTIMATE TENSILE RESISTANCE OF 8.5 KIPS PER BOLT. THE CONTRACTOR MUST PROVIDE EVIDENCE THAT THIS CAN BE ACHIEVED. EVIDENCE OF ADEQUATE TENSILE RESISTANCE CAN BE BASED ON THE MANUFACTURER'S PUBLISHED VALUES OF ULTIMATE TENSILE STRENGTH (ANCHOR SPACING AND EDGE DISTANCE MUST BE ACCOUNTED FOR). ANCHOR INSTALLATION, INCLUDING HOLE SIZE, DRILLING, AND CLEAN-OUT, MUST BE IN ACCORDANCE WITH THE MANUFACTURER'S INSTRUCTIONS.
6. FOR OTHER DETAILS & NOTES, SEE WIRE FENCE (DESIGN W-1)
7. LONGITUDINAL COLLECTOR GROUND WIRE CONTINUOUS BETWEEN EXPANSION JOINTS. GROUND WIRE PLACED IN 1" DIA. PVC CONDUIT AT SOUTH ABUTMENT, PIER 3 AND PIER 7. SEE SYSTEM WIDE ELECTRICAL PLANS FOR ADDITIONAL GROUNDING REQUIREMENTS.
8. GROUND WIRE PIGTAIL PLACED WITHIN 6" OF EACH FENCE POST ANCHORAGE. CONTRACTOR SHALL COORDINATE LOCATIONS WITH FENCE SUB CONTRACTOR.

NO.	DATE	BY	CHECK	DESIGN	REVISION / SUBMITTAL

DESIGNED BY: KR | CHECKED BY: KJK
DRAWN BY: MSK | CHECKED BY: KJK

AECOM Kimley»Horn

90% SUBMISSION - 01/22/16

METROPOLITAN COUNCIL

SOUTHWEST Green Line LRT Extension

CIVIL - VOLUME 4G
5TH AVENUE AND 7TH STREET
BRIDGE 27C18
WIRE FENCE SPECIAL DESIGN 1

DISCIPLINE: STRUCTURES
SHEET NAME: CBR27C18-BRG-RAL-002

SHEET 114 OF 148

Jan. 18 2016 03:19 pm V:\3400_ADC\CAD\SEGMENT E4\PLAN SHEETS\STRUCTURES\27C18\CBR27C18-BRG-RAL-002.dwg By: Victor.Madrid

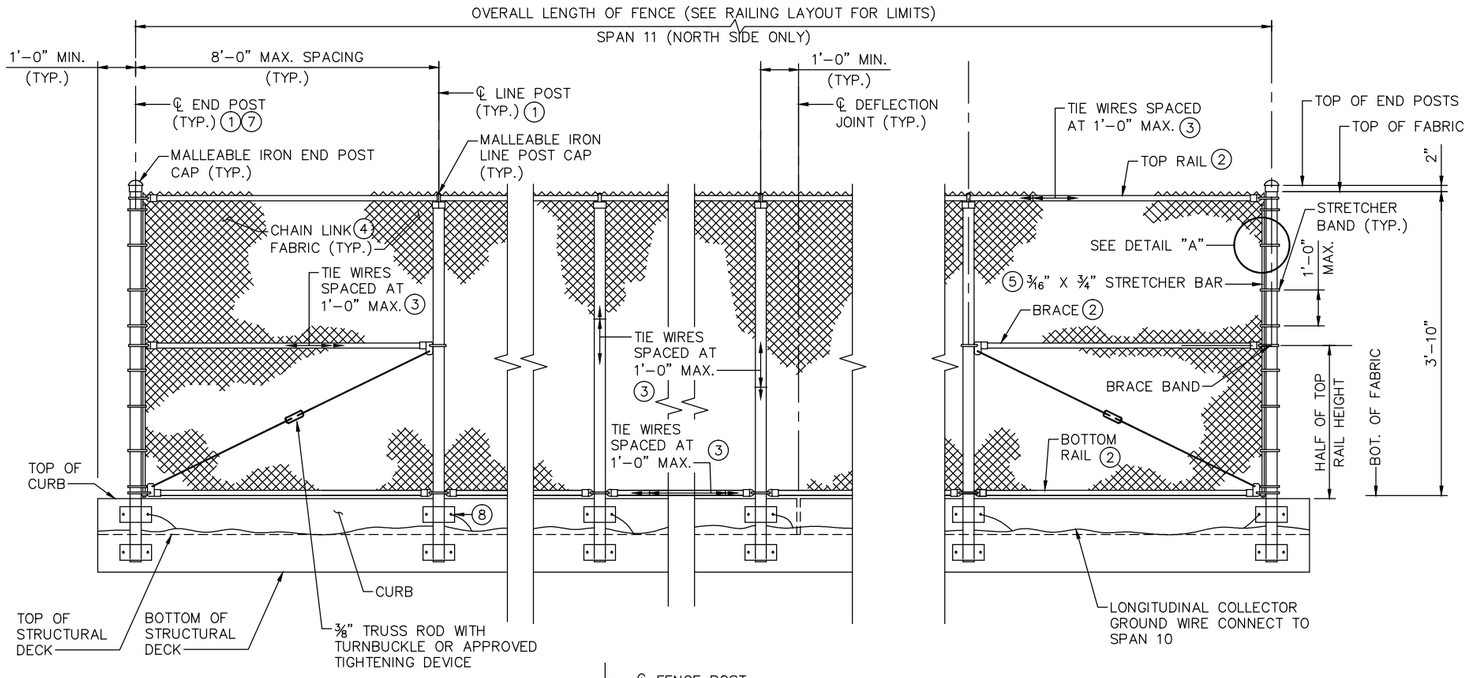

OUTSIDE ELEVATION OF WIRE FENCE (SPAN 11 LEFT SIDE ONLY)

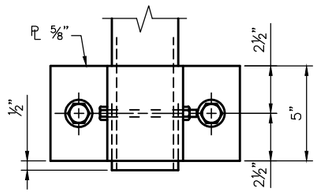

ELEVATION

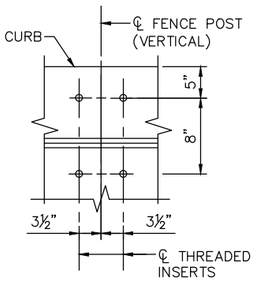

BOLT SETTING DETAIL

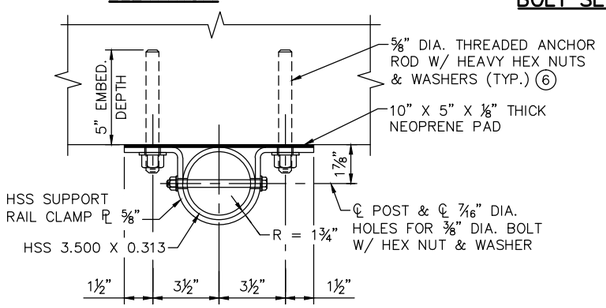

HSS CLAMP CONNECTION DETAIL

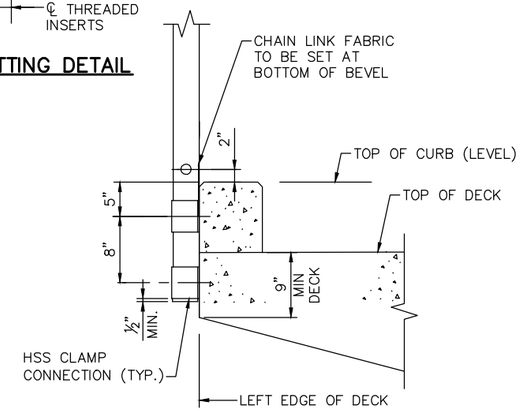

TYPICAL PART SECTION

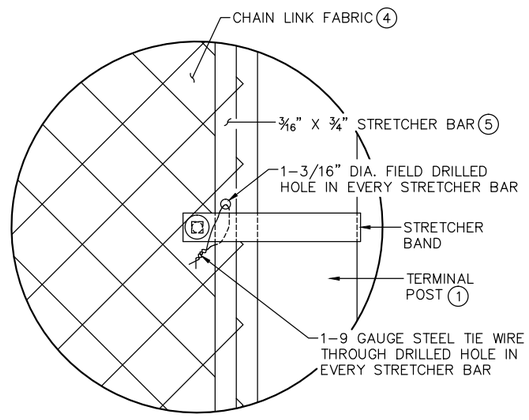

DETAIL "A"

NOTES:

1. GALVANIZED HSS 3.500 X 0.313 PER MNDOT SPEC. 3306.
2. GALVANIZED HSS 1.660 X 0.140 PER MNDOT SPEC. 3306.
3. 9 GAUGE GALVANIZED STEEL TIE WIRES ATTACH CHAIN LINK FABRIC TO HSS.
4. 9 GAUGE GALVANIZED STEEL CHAIN LINK FABRIC, 2" MESH, KNUCKLE SELVAGE TOP AND BOTTOM.
5. CONTRACTOR MUST FIELD DRILL ONE 3⁄16" DIA. HOLE IN EVERY STRETCHER BAR AND USE A 9 GALVANIZED GAUGE STEEL TIE WIRE TO TIE ON STRETCHER BAND AND CHAIN LINK FABRIC TOGETHER. LOCATE DRILLED HOLE FOR TIE WIRE AT APPROXIMATE MID-HEIGHT OF FENCE.
6. ⅝" DIA THREADED ANCHOR RODS MUST BE ASTM-A36. EMBED THREADED RODS INTO PARAPET WALL WITH AN APPROVED EPOXY ANCHORAGE SYSTEM. MINIMUM EMBEDMENT DEPTH IS 5". ANCHORAGE SYSTEM CHOSEN MUST BE ABLE TO ACHIEVE AN ULTIMATE TENSILE RESISTANCE OF 8.5 KIPS PER BOLT. THE CONTRACTOR MUST PROVIDE EVIDENCE THAT THIS CAN BE ACHIEVED. EVIDENCE OF ADEQUATE TENSILE RESISTANCE CAN BE BASED ON THE MANUFACTURER'S PUBLISHED VALUES OF ULTIMATE TENSILE STRENGTH (ANCHOR SPACING AND EDGE DISTANCE MUST BE ACCOUNTED FOR). ANCHOR INSTALLATION, INCLUDING HOLE SIZE, DRILLING, AND CLEAN-OUT, MUST BE IN ACCORDANCE WITH THE MANUFACTURER'S INSTRUCTIONS.
7. END POST AT EACH END OF SPAN 11.
8. GROUND WIRE PIGTAIL PLACED WITHIN 6" OF EACH FENCE POST ANCHORAGE. CONTRACTOR SHALL COORDINATE LOCATIONS WITH FENCE SUB CONTRACTOR.

NO.	DATE	BY	CHECK	DESIGN	REVISION / SUBMITTAL

DESIGNED BY: KR | CHECKED BY: KJK
DRAWN BY: MSK | CHECKED BY: KJK

AECOM Kimley»Horn

90% SUBMISSION - 01/22/16

METROPOLITAN COUNCIL

SOUTHWEST Green Line LRT Extension

CIVIL - VOLUME 4G
5TH AVENUE AND 7TH STREET
BRIDGE 27C18
WIRE FENCE SPECIAL DESIGN 2

DISCIPLINE: STRUCTURES
SHEET NAME: CBR27C18-BRG-RAL-003

SHEET 115 OF 148

Jan, 18 2016 03:20 pm v:\3400_ADC\CAD\SEGMENT E4\PLAN SHEETS\STRUCTURES\27C18\CBR27C18-BRG-RAL-003.dwg By: Victor.Madrid

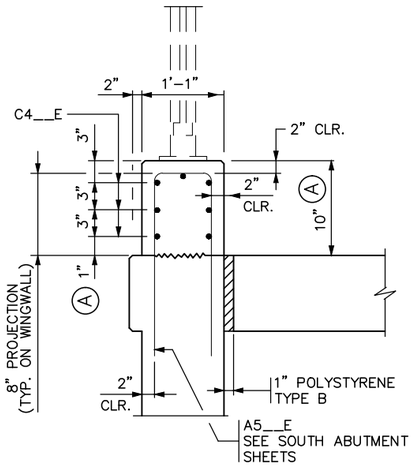

Ⓐ SECTION A–A

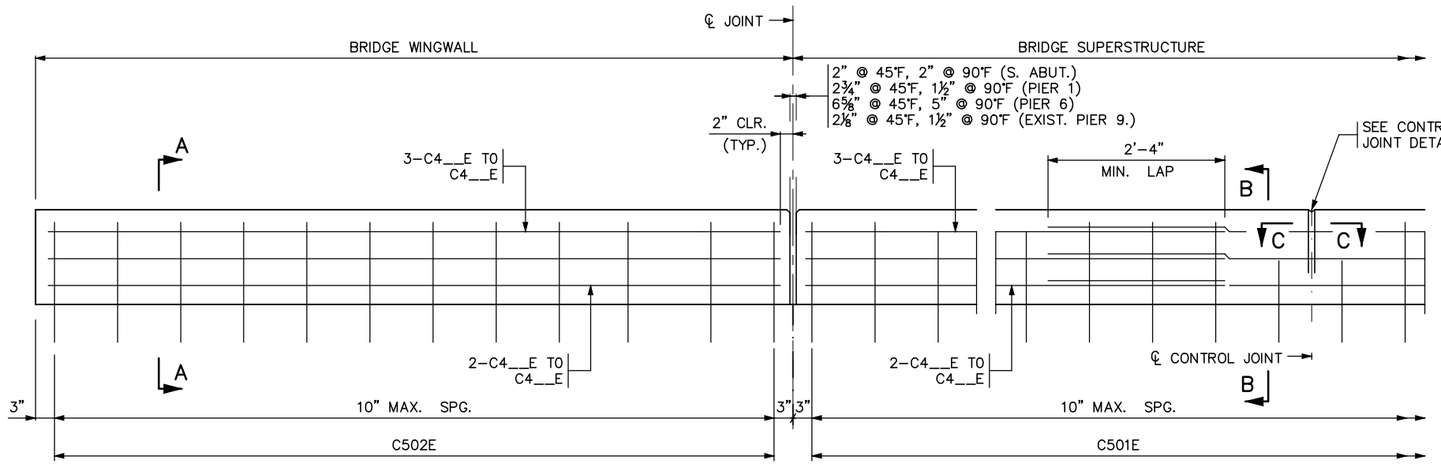

JOINT AT ABUTMENT

~~INTEGRAL OR SEMI-INTEGRAL ABUTMENT~~ SEE DETAIL "A" FOR PARAPET ABUTMENT

CONTROL JOINT

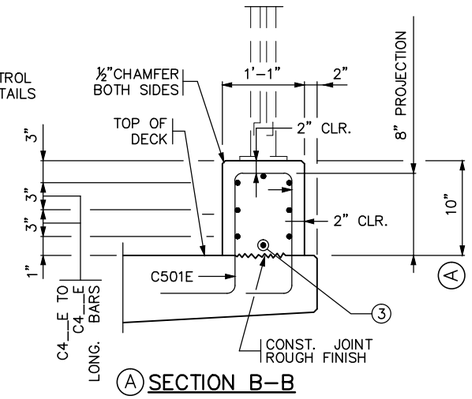

Ⓐ SECTION B–B

Ⓐ INSIDE ELEVATION OF CONCRETE CURB

CURB DOES NOT MEET CRASH TEST REQUIREMENTS OF NCHRP REPORT 350

BILL OF REINFORCEMENT FOR CURB				
BAR	NO.	LENGTH	SHAPE	LOCATION
C501E	___	4'-7"	⌐¬	CURB BASE VERTICAL
C502E	___	4'-9"	⌐¬	CURB BASE VERTICAL
C4__E	___	_____	——	CURB BASE LONGIT.
C4__E	___	_____	——	CURB BASE LONGIT.
C4__E	___	_____	——	CURB BASE LONGIT.

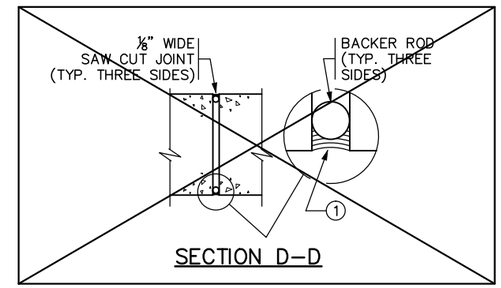

SECTION D–D

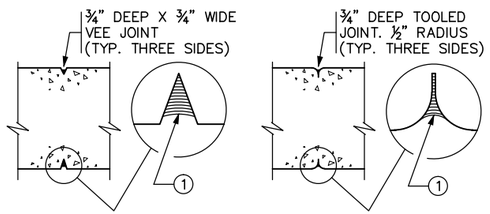

SECTION C–C
CONTRACTOR OPTION 1

SECTION C–C
CONTRACTOR OPTION 2

CONTROL JOINT DETAILS

WHEN USING SLIP FORM METHOD TO PLACE THE CONCRETE, CUT JOINT 3 INCHES DEEP USING MARGIN TROWEL OR SIMILAR MEANS IMMEDIATELY AFTER CONCRETE PLACEMENT (TYP. THREE SIDES)

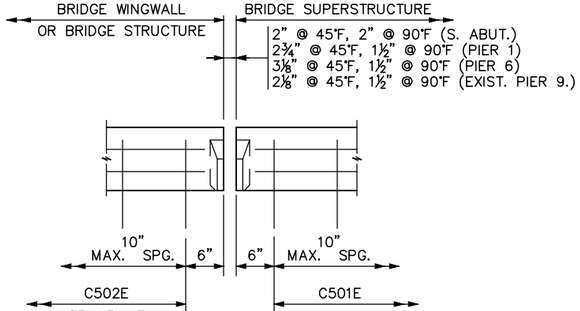

DETAIL "A" ② Ⓐ

~~(USE ONLY WITH STRIP SEAL EXPANSION DEVICE)~~
~~(EXPANSION DEVICE NOT SHOWN)~~

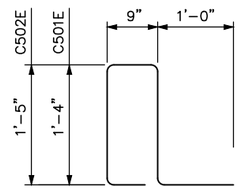

Ⓐ C501E, C502E

SHEET MODIFICATION:
Ⓐ DENOTES MODIFICATION TO STANDARD SHEET

GENERAL NOTES

~~CONTINUOUSLY GROUND ALL METAL RAILINGS; SEE THE SPECIAL PROVISIONS. REFER TO THE ELECTRICAL PLANS AND ELECTRICAL SPECIAL PROVISIONS FOR DETAILS REGARDING BONDING MULTIPLE ELECTRICAL GROUNDING SYSTEMS.~~

~~PAYMENT LENGTH SHALL BE MEASURED BETWEEN THE OUTSIDE FACES~~ OF ~~THE CONCRETE CURB.~~

Ⓐ CONCRETE CURB = 204 LBS./FT. (0.050 CU. YDS./FT.)

FINISH ALL EDGES OF CURB WITH ½" CHAMFER, EXCEPT WHERE OTHERWISE NOTED.

MAXIMUM SPACING OF CONTROL JOINTS ON SUPERSTRUCTURE, APPROACH AND WINGWALL SHALL BE 10 FT. SEE SUPERSTRUCTURE SHEET FOR JOINT SPACING.

~~CONCRETE CURB QUANTITIES ARE LISTED IN SUMMARY OF QUANTITIES FOR SUPERSTRUCTURE.~~

① JOINT SEALANT PER MnDOT APPROVED/QUALIFIED PRODUCTS LIST – CRACK AND JOINT MATERIALS – SILICONE JOINT SEALERS.

② REFER TO SHEETS 122–125 FOR JOINT DETAILS.

Ⓐ ③ LONGITUDINAL COLLECTOR GROUND WIRE CONTINUOUS BETWEEN EXPANSION JOINTS. GROUND WIRE PLACED IN 1" DIA. PVC CONDUIT AT SOUTH ABUTMENT, PIER 3 AND PIER 7. SEE SYSTEM WIDE ELECTRICAL PLANS FOR ADDITIONAL GROUNDING REQUIREMENTS.

REVISION:

APPROVED: NOVEMBER 6, 2013
Nancy Daubenberger
STATE BRIDGE ENGINEER

CERTIFIED BY _____ _____
LICENSED PROFESSIONAL ENGINEER DATE
NAME: LIC. NO.

TITLE: CONCRETE CURB ~~FOR USE WITH ORNAMENTAL RAILING~~

DES: KR	DR: MSK	APPROVED:
CHK: KJK	CHK: KJK	

SHEET NO. 116 OF 148 SHEETS

FIG. 5–397.167 (MOD.)

BRIDGE NO. 27C18

Jan. 18 2016 03:20 pm V:\3400_ADC\CAD\SEGMENT E4\PLAN SHEETS\STRUCTURES\27C18\CBR27C18-BRG-RAL-004.dwg By: Victor.Madrid

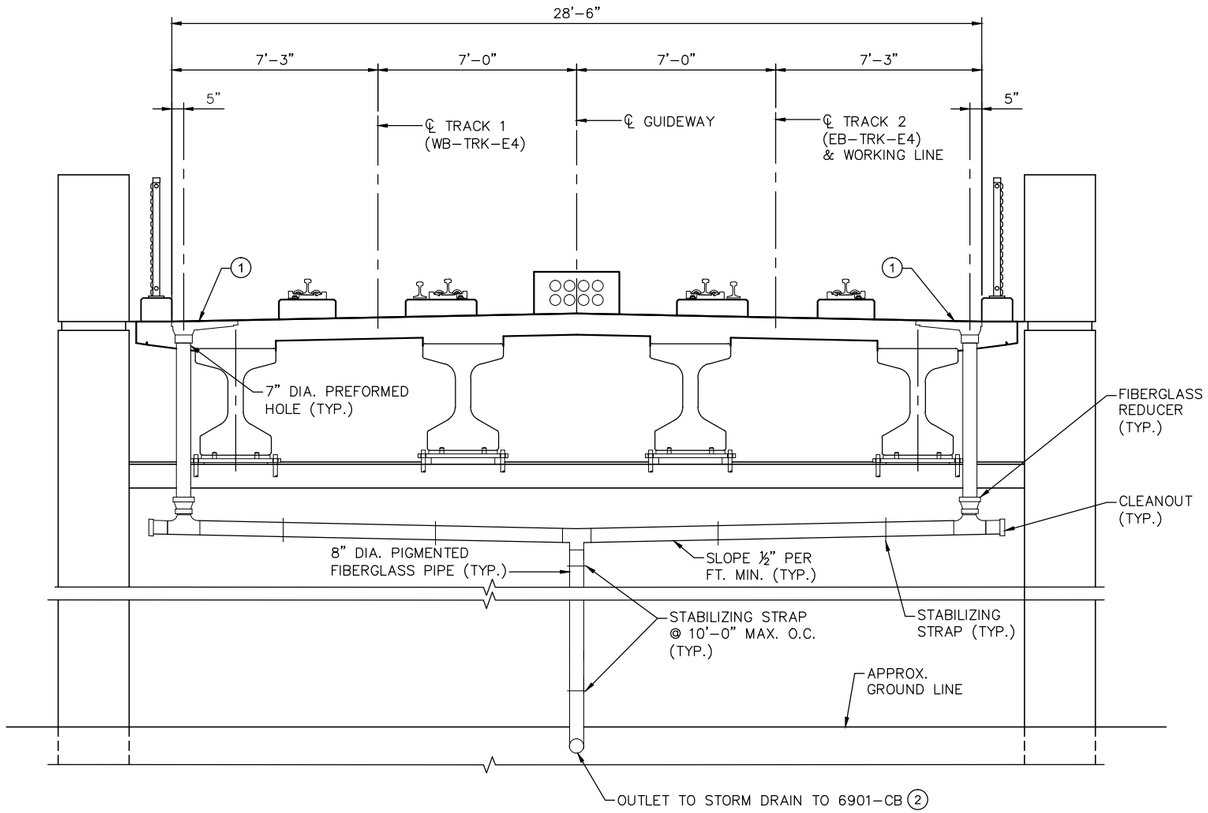

DRAIN AT SOUTH ABUTMENT
(NORTH FACE)

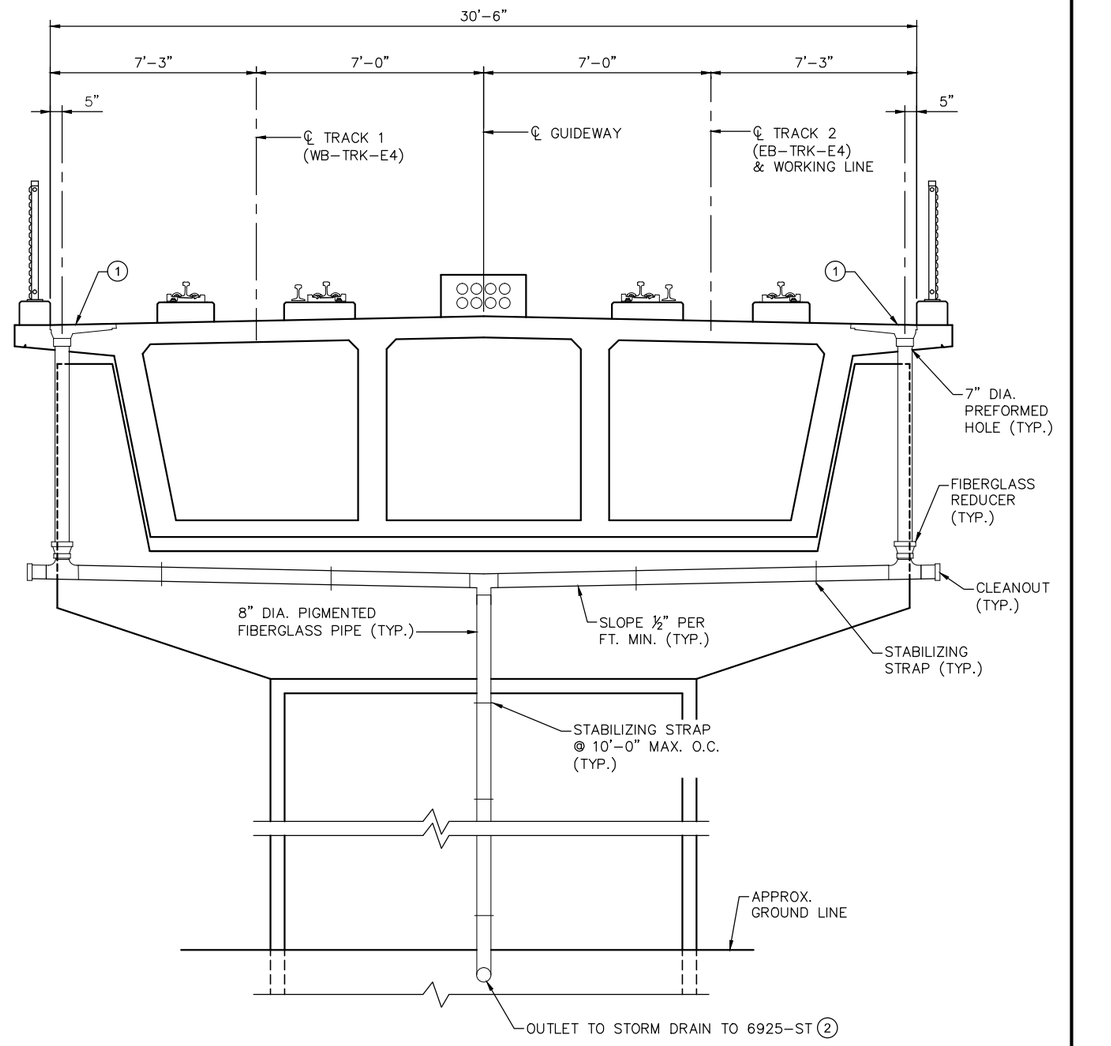

DRAIN AT PIER 1
(NORTH FACE)

NOTES:

1. ALL DRAINAGE PIPES AND FITTINGS SHALL BE PIGMENTED FIBERGLASS REINFORCED THERMOSETTING RESIN PIPE, SEE SPECIAL PROVISIONS. PIGMENT OF EXPOSED PIPING SHALL MATCH ADJACENT CONCRETE STRUCTURE.
2. NEENAH TYPE R-3956 OR APPROVED EQUAL DRAIN INLET. SEE SHEET 121 FOR DETAILS.

SEE DRAINAGE PLANS FOR ADDITIONAL DRAINAGE DETAILS.

NO.	DATE	BY	CHECK	DESIGN	REVISION / SUBMITTAL

DESIGNED BY: KR | CHECKED BY: KJK
DRAWN BY: MSK | CHECKED BY: KJK

AECOM Kimley»Horn

90% SUBMISSION - 01/22/16

METROPOLITAN COUNCIL

SOUTHWEST Green Line LRT Extension

CIVIL - VOLUME 4G
5TH AVENUE AND 7TH STREET
BRIDGE 27C18
DRAINAGE SYSTEM DETAILS 1

DISCIPLINE: STRUCTURES

SHEET NAME: CBR27C18-BRG-DRN-001-1

SHEET 119 OF 148

Jan, 18 2016 03:33 pm v:\3400_ADC\CAD\SEGMENT E4\PLAN SHEETS\STRUCTURES\27C18\CBR27C18-BRG-DRN-001.dwg By: Victor.Madrid

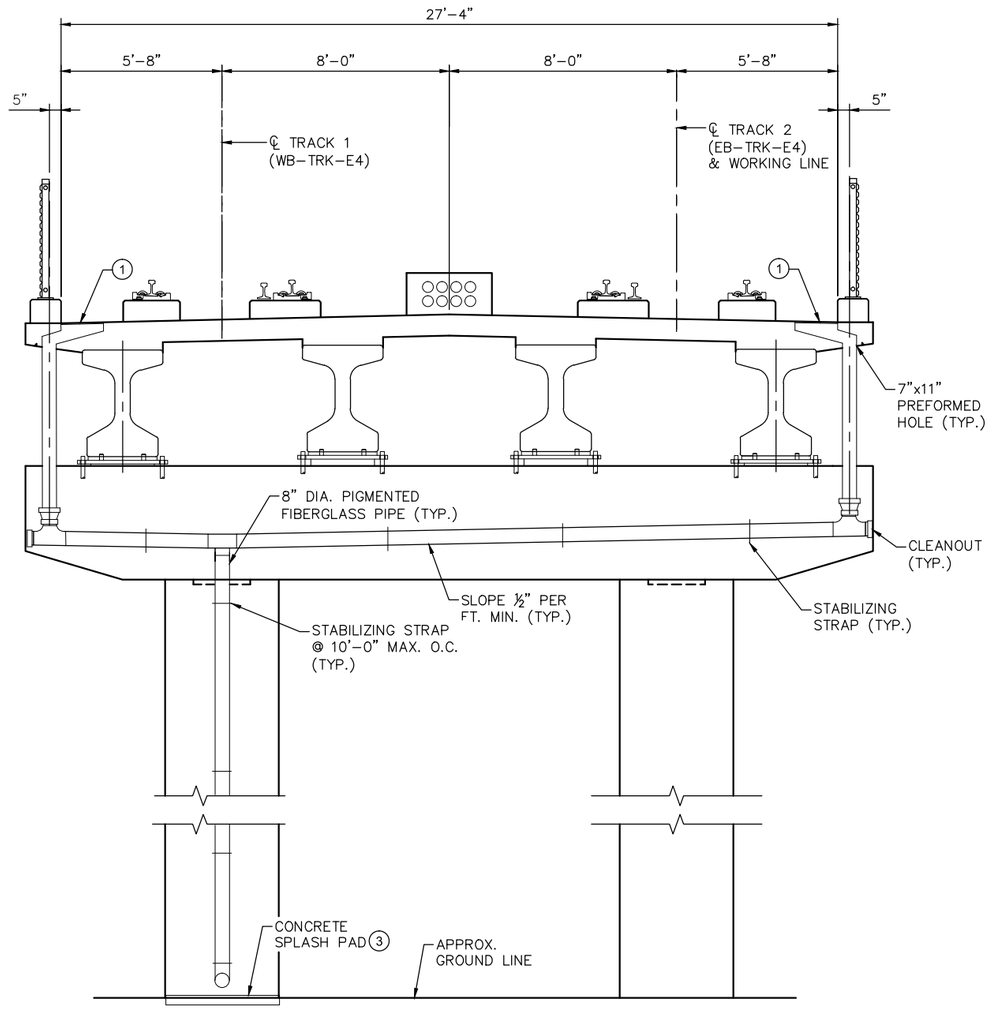

DRAIN AT PIER 9

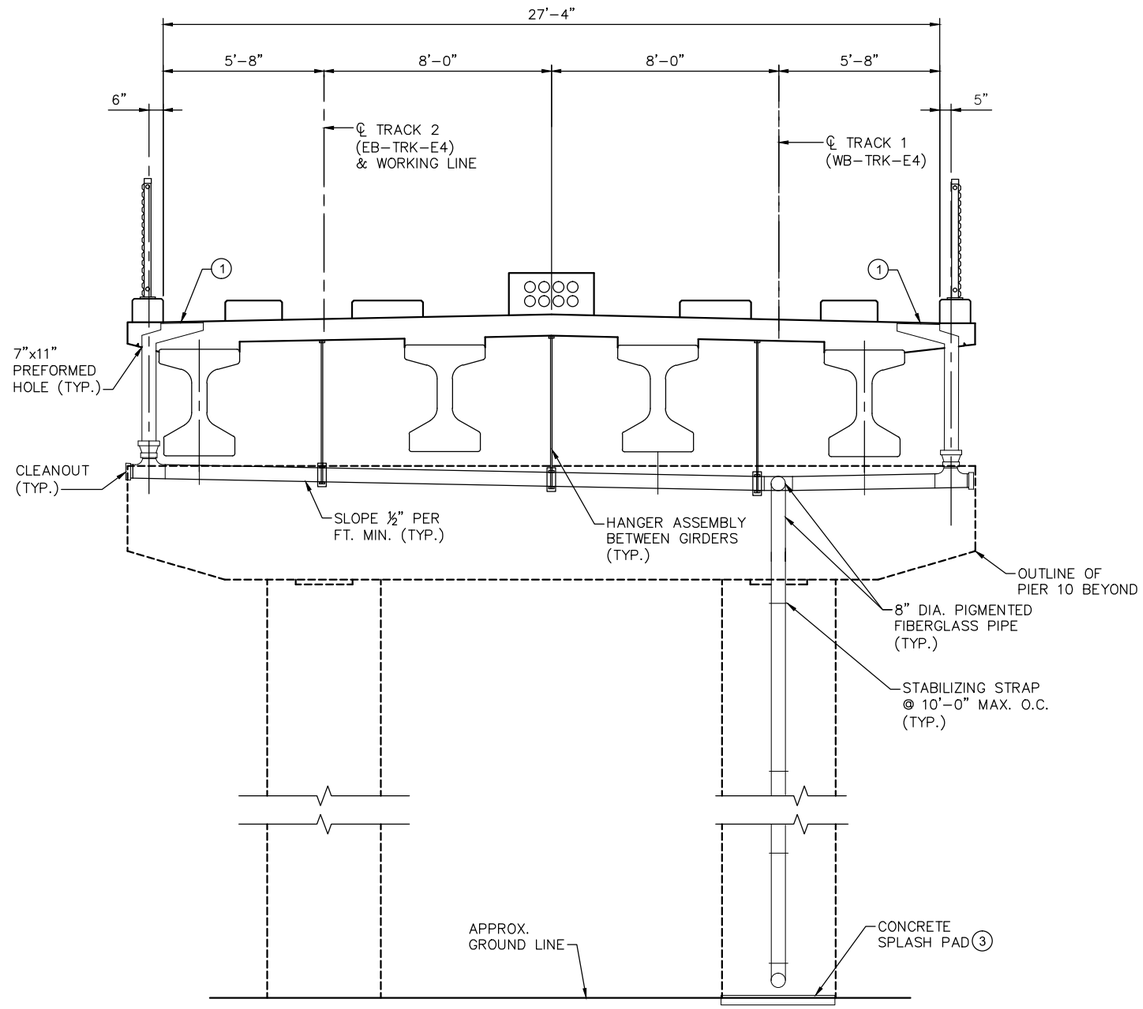

DRAIN AT LOW POINT IN SPAN 11
(LOOKING BACK STATION)

NOTES:

ALL DRAINAGE PIPES AND FITTINGS SHALL BE PIGMENTED FIBERGLASS REINFORCED THERMOSETTING RESIN PIPE, SEE SPECIAL PROVISIONS. PIGMENT OF EXPOSED PIPING SHALL MATCH ADJACENT CONCRETE STRUCTURE.

SEE SHEET 121 FOR ELEVATION VIEW OF SPAN 11.

(1) MNDOT STANDARD B705 OFFSET FLOOR DRAIN. SEE SHEET 131 FOR DETAILS.

(2) SEE DRAINAGE PLANS FOR ADDITIONAL DRAINAGE DETAILS.

(3) SEE CIVIL PLANS FOR DETAILS OF SPLASH PAD.

NO.	DATE	BY	CHECK	DESIGN	REVISION / SUBMITTAL

DESIGNED BY: KR | CHECKED BY: KJK
DRAWN BY: MSK | CHECKED BY: KJK

AECOM Kimley»Horn

90% SUBMISSION - 01/22/16

METROPOLITAN COUNCIL

SOUTHWEST Green Line LRT Extension

CIVIL - VOLUME 4G
5TH AVENUE AND 7TH STREET
BRIDGE 27C18
DRAINAGE SYSTEM DETAILS 2

DISCIPLINE: STRUCTURES
SHEET NAME: CBR27C18-BRG-DRN-001-2

SHEET 120 OF 148

Jan, 18 2016 03:33 pm V:\3400_ADC\CAD\SEGMENT E4\PLAN SHEETS\STRUCTURES\27C18\CBR27C18-BRG-DRN-001.dwg By: Victor.Madrid

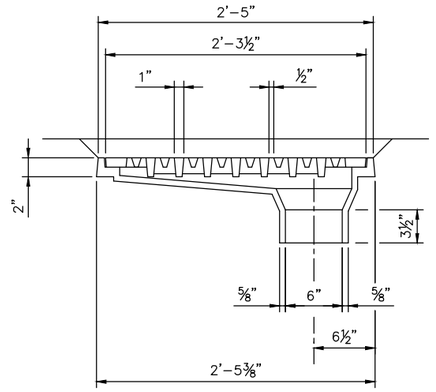

ELEVATION

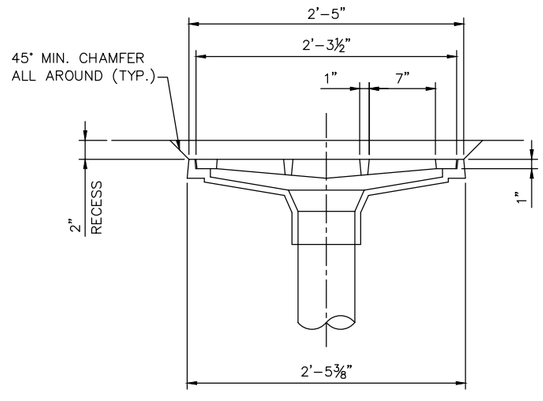

SECTION

DRAINAGE INLET DETAILS

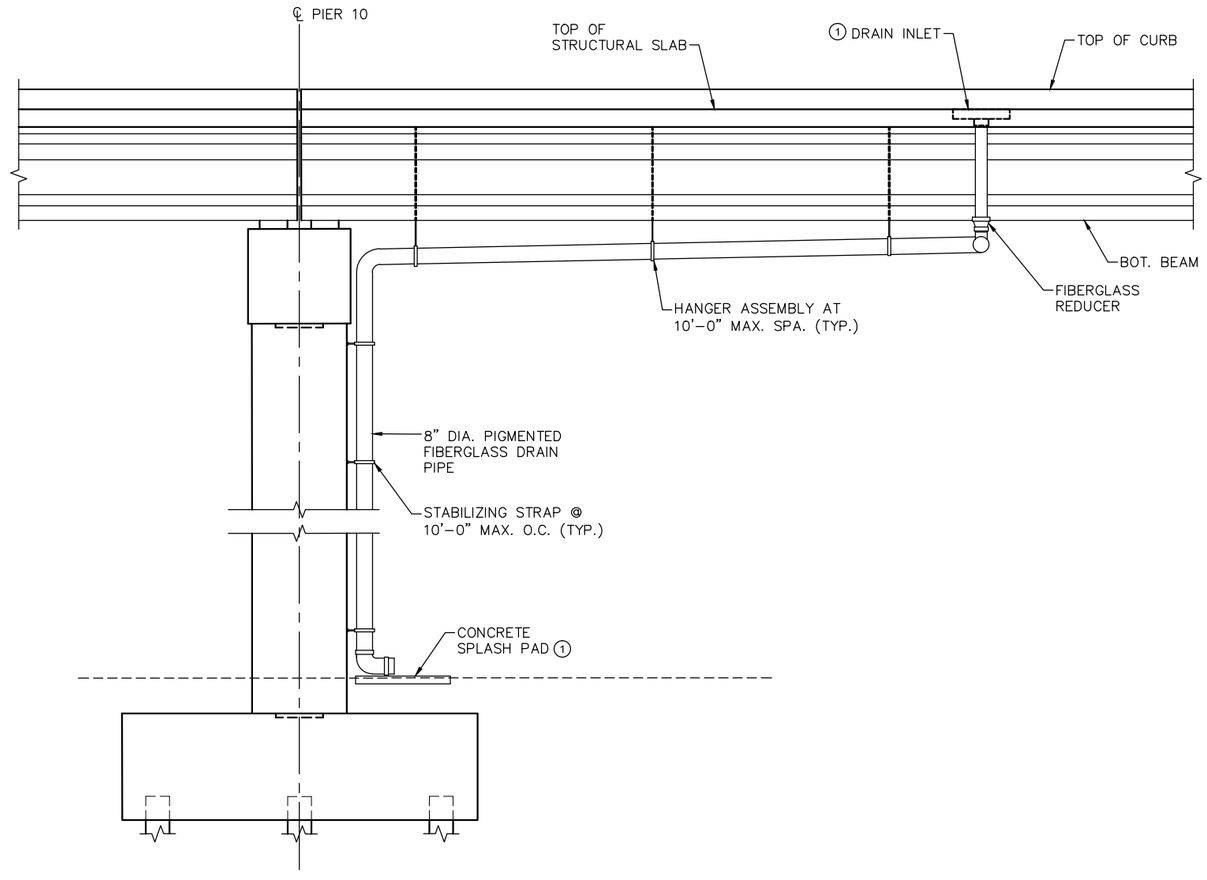

SPAN 11 DRAINAGE ELEVATION

NOTES:

ALL DRAINAGE PIPES AND FITTINGS SHALL BE PIGMENTED FIBERGLASS REINFORCED THERMOSETTING RESIN PIPE, SEE SPECIAL PROVISIONS. PIGMENT OF EXPOSED PIPING SHALL MATCH ADJACENT CONCRETE STRUCTURE.

① MNDOT STANDARD B705 OFFSET FLOOR DRAIN. SEE SHEET 131 FOR DETAILS.

NO.	DATE	BY	CHECK	DESIGN	REVISION / SUBMITTAL

DESIGNED BY: DJL | CHECKED BY: KJK
DRAWN BY: MSK | CHECKED BY: KJK

AECOM Kimley»Horn

90% SUBMISSION - 01/22/16

METROPOLITAN COUNCIL

SOUTHWEST Green Line LRT Extension

CIVIL - VOLUME 4G
5TH AVENUE AND 7TH STREET
BRIDGE 27C18
DRAINAGE SYSTEM DETAILS 3

DISCIPLINE: STRUCTURES
SHEET NAME: CBR27C18-BRG-DRN-001-2

SHEET 121 OF 148

Jan, 18 2016 03:33 pm v:\3400_ADC\CAD\SEGMENT E4\PLAN SHEETS\STRUCTURES\27C18\CBR27C18-BRG-DRN-001.dwg By: Victor.Madrid

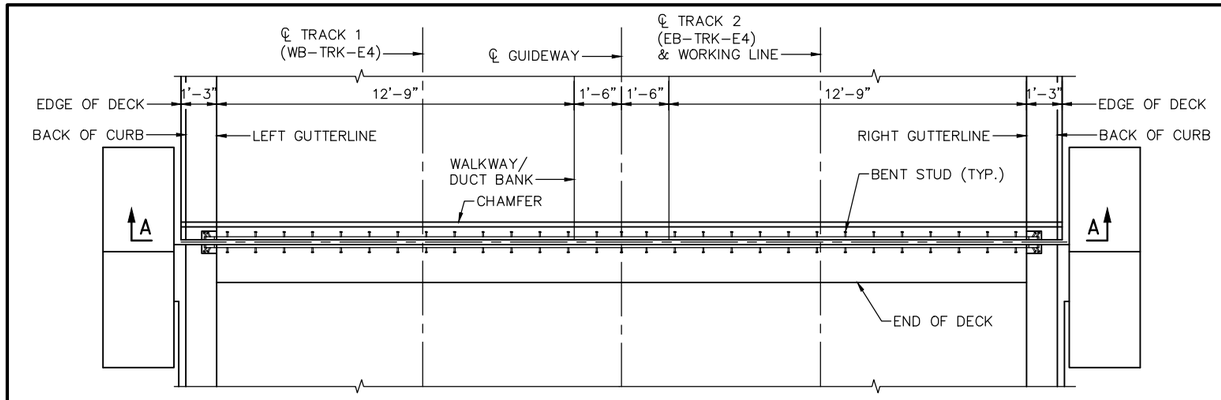

PLAN VIEW @ S. ABUT. EXPANSION DEVICE

(LOOKING AHEAD STATION)

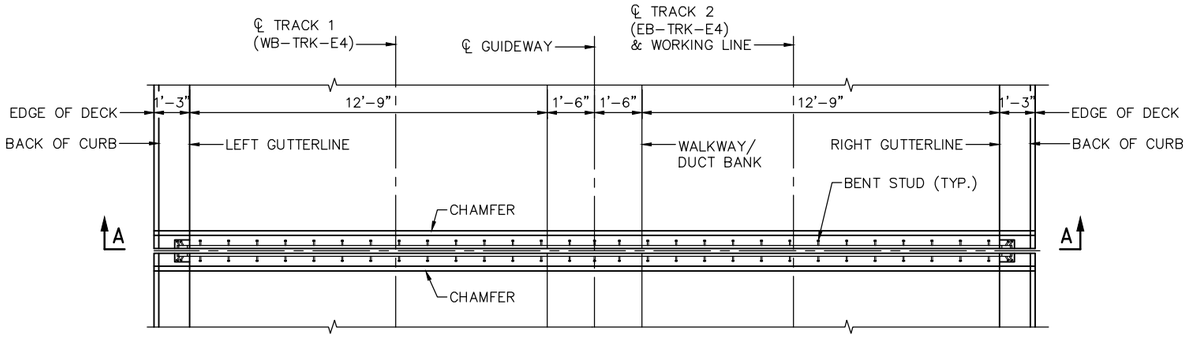

PLAN VIEW @ PIER 1 EXPANSION DEVICE

(LOOKING AHEAD STATION)

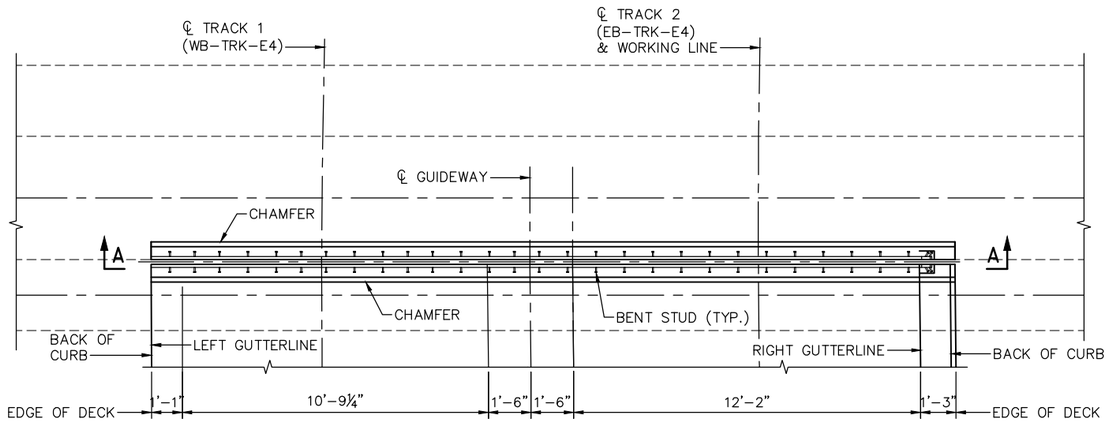

PLAN VIEW @ EXST. PIER 9 EXPANSION DEVICE

(LOOKING AHEAD STATION)

EXPANSION JOINT ELEVATIONS			
SUBSTRUCTURE	SOUTH ABUTMENT	PIER 1	EXST PIER 9
LEFT GUTTERLINE	847.82	851.76	844.71
TRACK 1	847.87	851.90	844.82
CL GUIDEWAY	848.11	852.04	844.98
TRACK 2	847.87	851.90	844.82
RIGHT GUTTERLINE	847.82	851.76	844.71

EXPANSION JOINT OPENING DIMENSIONS			
	SOUTH ABUTMENT	PIER 1	EXST PIER 9
45° F	2"	2 3/4"	2 1/8"
90° F	2"	1 1/2"	1 1/2"

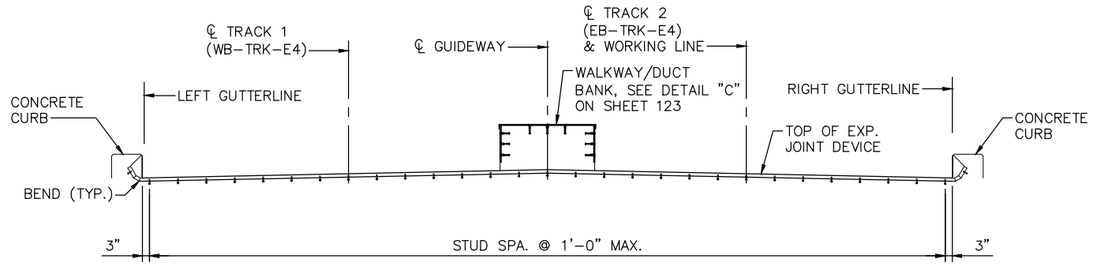

SECTION A–A – ALONG CENTERLINE JOINT

ELEVATIONS SHOWN IN TABLE ARE ½" BELOW TOP OF DECK @ CENTERLINE JOINT

NO.	DATE	BY	CHECK	DESIGN	REVISION / SUBMITTAL

DESIGNED BY: DJL CHECKED BY: KJK
DRAWN BY: MSK CHECKED BY: KJK

AECOM Kimley»Horn

90% SUBMISSION - 01/22/16

METROPOLITAN COUNCIL

SOUTHWEST Green Line LRT Extension

CIVIL - VOLUME 4G
5TH AVENUE AND 7TH STREET
BRIDGE 27C18
WATERPROOF EXPANSION DEVICE 1

DISCIPLINE: STRUCTURES
SHEET NAME: CBR27C18-BRG-SDT-003

SHEET 122 OF 148

Jan, 18 2016 03:33 pm V:\3400_ADC\CAD\SEGMENT E4\PLAN SHEETS\STRUCTURES\27C18\CBR27C18-BRG-SDT-003.dwg By: Victor.Madrid

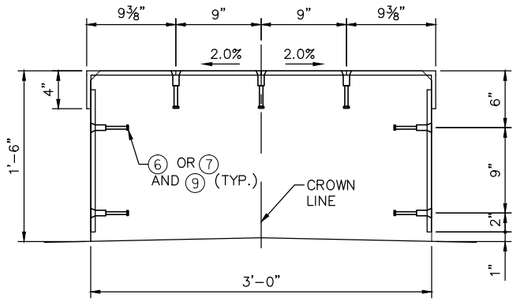

DETAIL "C"
WALKWAY/DUCT BANK

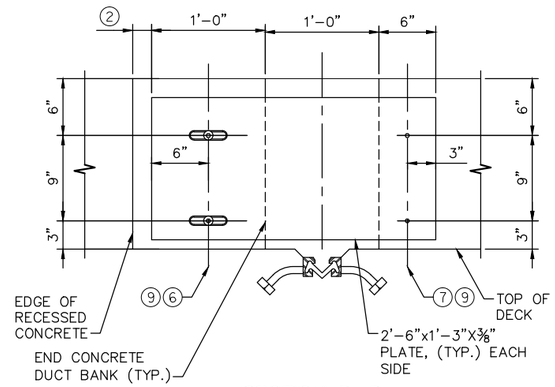

SECTION D–D

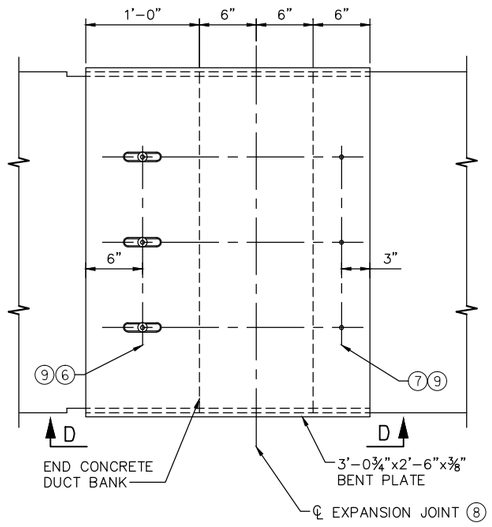

DUCT BANK PLAN AT EXP JOINT

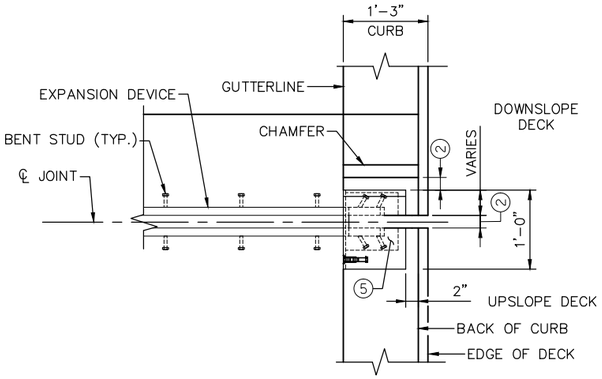

ENLARGED PLAN

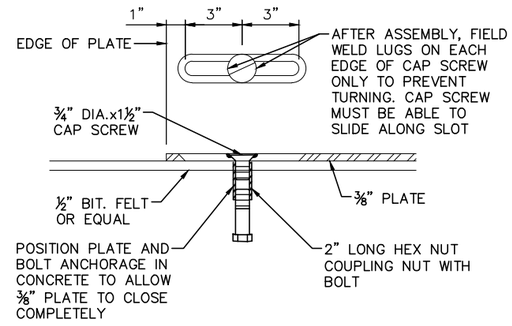

DETAIL "A"

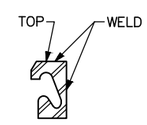

SECTION C–C

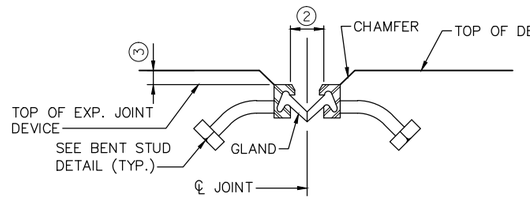

SECTION B–B

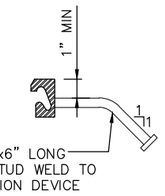

BENT STUD DETAIL

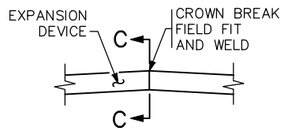

DETAIL "B"

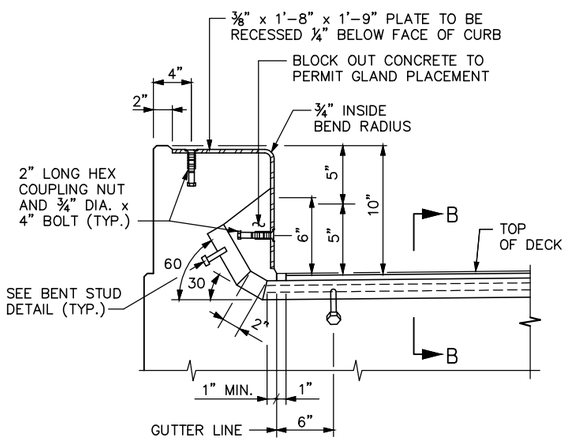

CONCRETE CURB

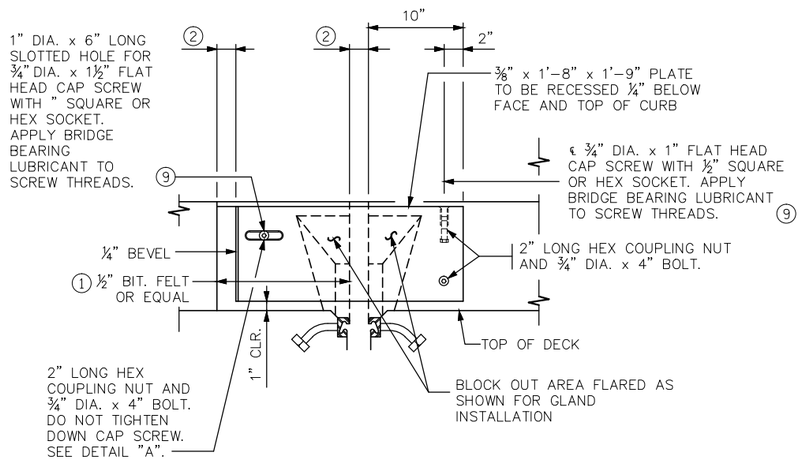

CURB ELEVATION

NOTES:

GALVANIZE STRUCTURAL STEEL AFTER FABRICATION AS PER SPEC. 3394. GALVANIZE FASTENERS AS PER SPEC. 3392.

JOINTS IN EXTRUSION SHALL BE LOCATED AT BREAKS IN TRANSVERSE PROFILE AND AS OTHERWISE REQUIRED. JOINTS SHALL BE CLOSE FIT AND WELDED. REPAIR AFTER WELDING AS PER SPEC. 2471.3.L.

STRUCTURAL STEEL SHALL COMPLY WITH SPEC. 3306 OR SPEC. 3309.

EXPANSION DEVICE SHALL BE STRAIGHTENED TO A TOLERANCE OF ⅛" IN 10 FT.

CAP SCREWS SHALL BE COUNTERSUNK 1/16" BELOW TOP OF PLATE.

(1) USE LARGEST SINGLE PIECE POSSIBLE. USE OF SMALL PIECES OR SCRAPS SECURED TOGETHER IS PROHIBITED.

(2) SEE EXPANSION JOINT OPENING TABLE ON SHEET 122.

(3) TOP OF CONCRETE TO TOP OF EXP. JT. DEVICE ½" (⅝" MAX).

(4) NOT USED.

(5) MINIMAL AMOUNT OF CURB CONCRETE ABOVE EXPANSION DEVICE SHALL BE BLOCKED OUT FOR GLAND INSTALLATION.

(6) ℄ ¾" DIA. x 6" LONG SLOTTED HOLES FOR ½" DIA. x 1½" FLAT HEAD SCREW WITH 2" LONG HEX COUPLING NUT AND ½" DIA x 4" BOLT. DO NOT TIGHTEN DOWN SCREW. SEE DETAIL "A". APPLY BRIDGE BEARING LUBRICANT TO SCREW THREADS.

(7) ℄ ¾" DIA. HOLE FOR ½" DIA. x 1" FLAT HEAD SCREW WITH 2" LONG HEX COUPLING NUT AND ½" DIA. x 4" BOLT. APPLY BRIDGE BEARING LUBRICANT TO SCREW THREADS.

(8) CONDUIT AND FITTINGS NOT SHOWN.

(9) LUBRICANT PER MNDOT APPROVED/QUALIFIED PRODUCTS LIST: BRIDGE–BRIDGE BEARING LUBRICANT.

NO.	DATE	BY	CHECK	DESIGN	REVISION / SUBMITTAL

DESIGNED BY: DJL | CHECKED BY: KJK
DRAWN BY: MSK | CHECKED BY: KJK

AECOM Kimley»Horn

90% SUBMISSION - 01/22/16

METROPOLITAN COUNCIL

SOUTHWEST Green Line LRT Extension

CIVIL - VOLUME 4G
5TH AVENUE AND 7TH STREET
BRIDGE 27C18
WATERPROOF EXPANSION DEVICE 2

DISCIPLINE: STRUCTURES
SHEET NAME: CBR27C18-BRG-SDT-004

SHEET 123 OF 148

Jan, 18 2016 03:34 pm v:\3400_ADC\CAD\SEGMENT E4\PLAN SHEETS\STRUCTURES\27C18\CBR27C18-BRG-SDT-004.dwg By: Victor.Madrid

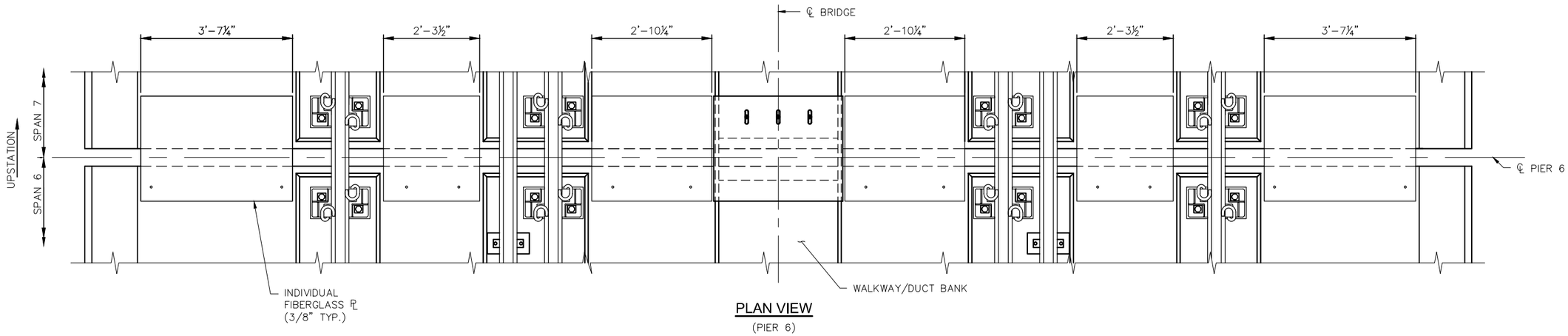

PLAN VIEW
(PIER 6)

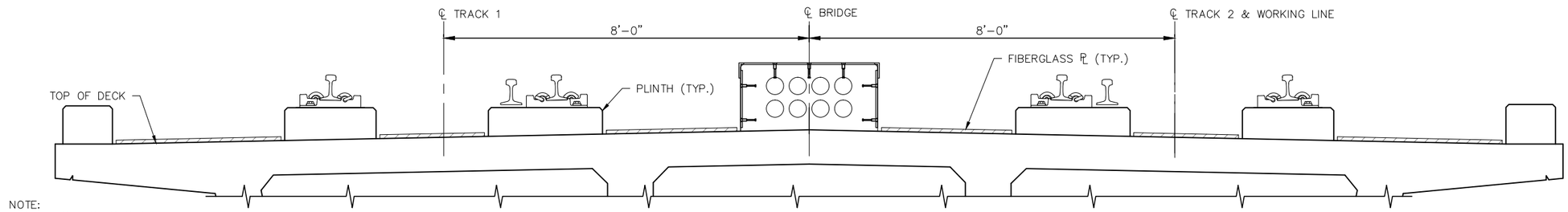

NOTE:
WIRE FENCE NOT SHOWN FOR CLARITY.

SECTION AT EXPANSION JOINT
(PIER 6)

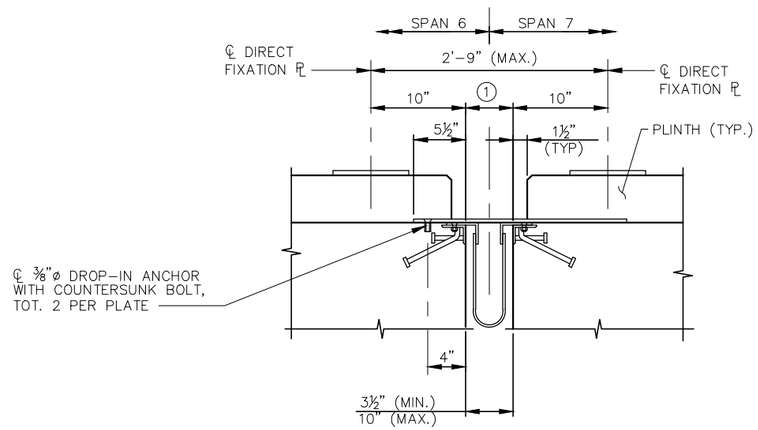

CROSS SECTION - EXPANSION JOINT DEVICE (TYP.)
(PIER 6)

NOTES:

PLATES SHALL BE FIBERGLASS WITH A COARSE TEXTURED SLIP RESISTANT SURFACE.

DROP-IN ANCHORS AND BOLTS SHALL BE TYPE 316 STAINLESS STEEL.

① JOINT OPENING @ 45° F = 6⅝";
JOINT OPENING @ 90° F = 5.0"

NO.	DATE	BY	CHECK	DESIGN	REVISION / SUBMITTAL

DESIGNED BY: DJL | CHECKED BY: KJK
DRAWN BY: MSK | CHECKED BY: KJK

AECOM Kimley»Horn

90% SUBMISSION - 01/22/16

METROPOLITAN COUNCIL

SOUTHWEST Green Line LRT Extension

CIVIL - VOLUME 4G
5TH AVENUE AND 7TH STREET
BRIDGE 27C18
WATERPROF EXPANSION DEVICE 3

DISCIPLINE: STRUCTURES
SHEET NAME: CBR27C18-BRG-SDT-005

SHEET 124 OF 148

Jan, 18 2016 03:34 pm V:\3400_ADC\CAD\SEGMENT E4\PLAN SHEETS\STRUCTURES\27C18\CBR27C18-BRG-SDT-005.dwg By: Victor.Madrid

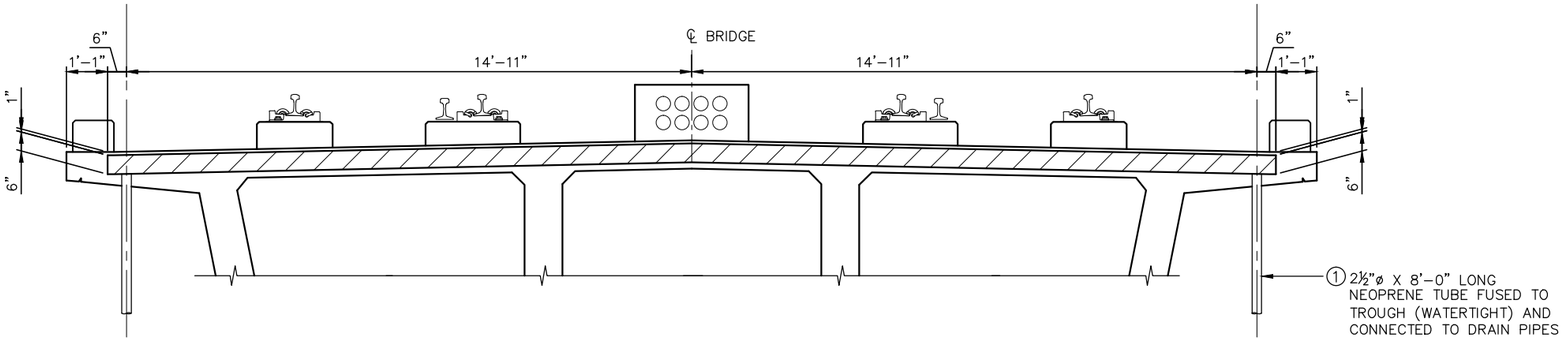

CROSS SECTION DRAINAGE TROUGH AT PIER 6

(SHOWN LOOKING BACK STATION)

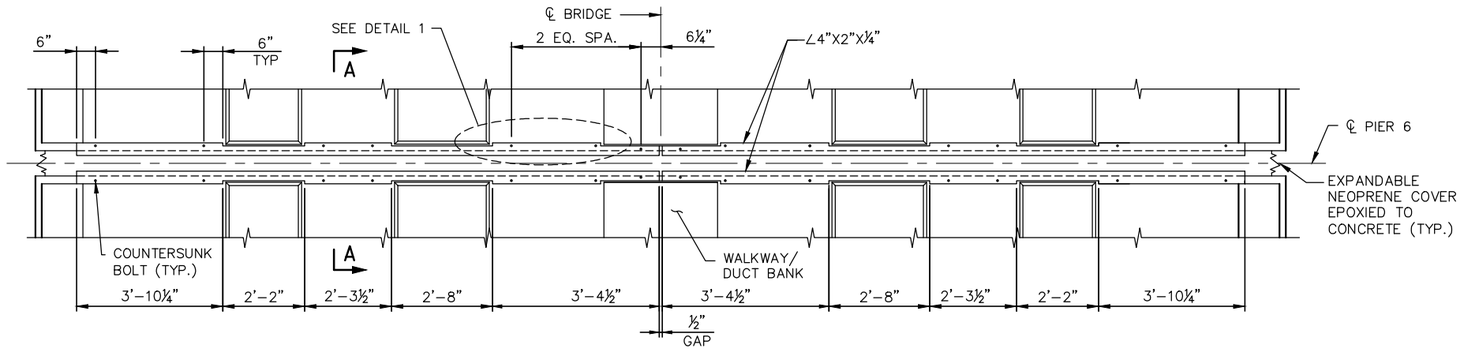

PLAN - TOP SLAB DRAINAGE TROUGH AT PIER 6

(FIBERGLASS PLATES NOT SHOWN FOR CLARITY)

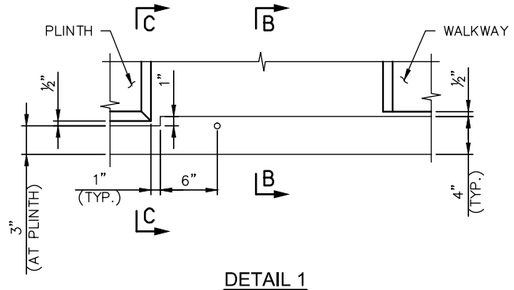

DETAIL 1

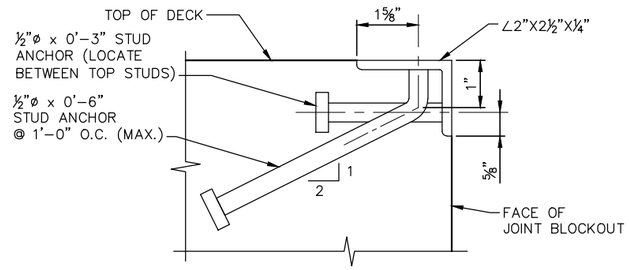

DETAIL 2

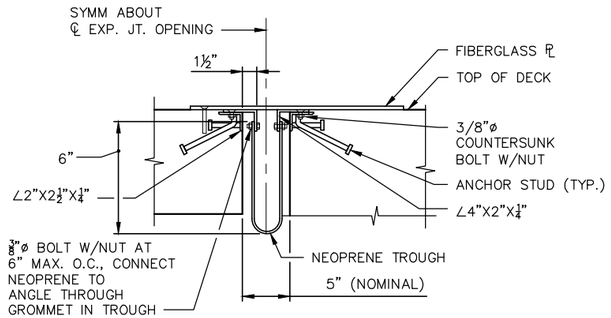

SECTION A-A

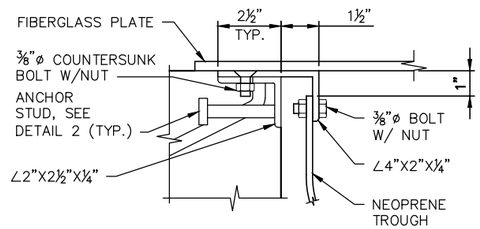

SECTION B-B

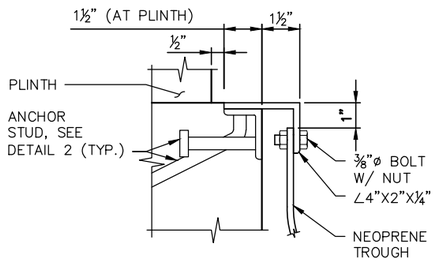

SECTION C-C

NOTES:

ALL STEEL ANGLES SHALL CONFORM TO ASTM A36 OR BETTER. BOLTS FOR ANGLES SHALL CONFORM TO ASTM A307.

ALL ANGLES, BOLTS, AND ASSOCIATED HARDWARE SHALL BE HOT DIP GALVANIZED IN ACCORDANCE WITH MnDOT SPEC 3394.

∠2"X2½"X¼" TO BE CAST IN JOINT BLOCKOUT SO THAT WHEN THE ∠4"X2"X¼" IS INSTALLED, THE TOP ANGLE IS FLUSH WITH THE TOP OF THE DECK.

NEOPRENE TROUGH SHALL BE 60 DUROMETER.

CONTRACTOR SHALL SUBMIT SHOP PLANS OF THE EXPANSION JOINT DEVICE TO THE ENGINEER FOR APPROVAL.

① SEE "DRAINAGE DETAILS" SHEETS FOR ROUTING AND CONNECTION OF 2½"ø NEOPRENE TUBE TO DRAIN PIPES.

NO.	DATE	BY	CHECK	DESIGN	REVISION / SUBMITTAL

DESIGNED BY: DJL | CHECKED BY: KJK
DRAWN BY: MSK | CHECKED BY: KJK

AECOM Kimley»Horn

90% SUBMISSION - 01/22/16

METROPOLITAN COUNCIL

SOUTHWEST Green Line LRT Extension

CIVIL - VOLUME 4G
5TH AVENUE AND 7TH STREET
BRIDGE 27C18
WATERPROOF EXPANSION DEVICE 4

DISCIPLINE: STRUCTURES
SHEET NAME: CBR27C18-BRG-SDT-006

SHEET 125 OF 148

Jan, 18 2016 03:35 pm v:\3400_ADC\CAD\SEGMENT E4\PLAN SHEETS\STRUCTURES\27C18\CBR27C18-BRG-SDT-006.dwg By: Victor.Madrid

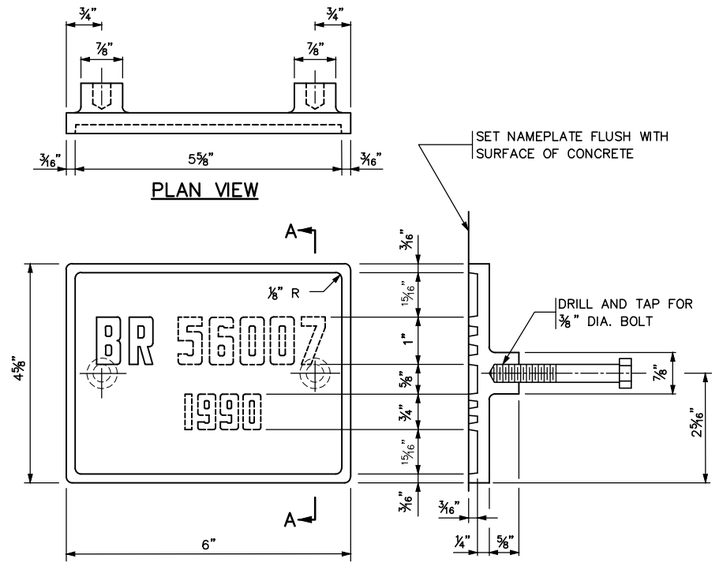

THE DASHED NUMBERS SHOWN ABOVE ARE FOR ILLUSTRATION.
DATA TO BE SHOWN ON NAMEPLATE IS AS FOLLOWS:

BRIDGE 27C18

YEAR ①



NUMBERS FOR NAMEPLATE

NOTES:

MATERIAL SHALL COMPLY WITH SPEC. 3327.

LETTERS AND NUMBERS SHALL CONFORM TO THOSE SHOWN.

DRAFT ON LETTERS AND NUMBERS SHALL NOT BE MORE THAN 3" IN 12".

HORIZONTAL SPACING OF LETTERS AND NUMBERS SHALL PRODUCE A BALANCED LAYOUT IN PROPORTION TO SPACING SHOWN.

TOP SURFACE OF LETTERS, NUMBERS AND FRAMES SHALL BE BURNISHED.

FURNISH 2 STEEL BOLTS ⅜ " DIA. x 3" LONG WITH EACH PLATE.

ALL DIMENSIONS FOR ¾" HIGH LETTERS AND NUMBERS SHALL BE IN DIRECT PROPORTION TO THOSE SHOWN FOR THE 1" HIGH LETTERS AND NUMBERS.

① YEAR OF CONSTRUCTION.

APPROVED: NOVEMBER 22, 2002	STATE OF MINNESOTA DEPARTMENT OF TRANSPORTATION	REVISION 09–11–2014	DETAIL NO.
STATE BRIDGE ENGINEER	BRIDGE NAMEPLATE (FOR NEW BRIDGES)		B101

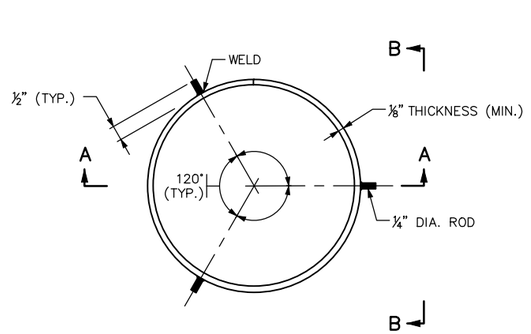

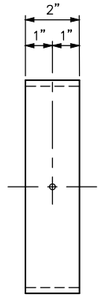

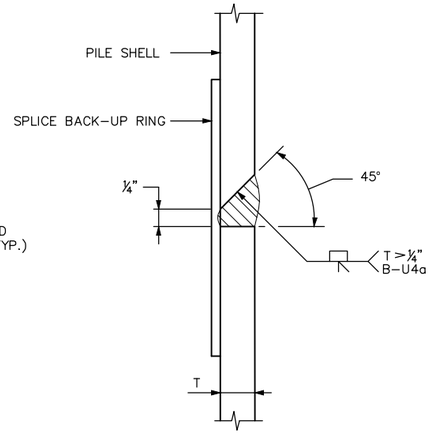

NOTES:

APPROVED COMMERCIAL PILE SPLICE BACK–UP RING MAY BE USED IN LIEU OF THE TYPE DETAILED, PROVIDED THAT ¼" ROOT IS MAINTAINED. BACK–UP RING SHALL HAVE A TIGHT FIT.

WELDING ELECTRODES SHALL BE CELLULOSIC TYPE ELECTRODES E–6010 OR E–6011.

ELECTRODES WHICH HAVE BECOME WET, SOILED OR DAMAGED SHALL NOT BE USED.

WELDING SHALL NOT BE DONE WHEN THE AMBIENT TEMPERATURE IS LOWER THAN 0° F. OR WHEN THE PILE IS WET OR EXPOSED TO FALLING RAIN OR SNOW. WHEN THE PILE METAL TEMPERATURE IS BELOW 32° F., THE PILE METAL IN THE AREA OF THE WELD SHALL BE HEATED TO A MINIMUM TEMPERATURE OF 70° F. AND MAINTAINED AT THIS TEMPERATURE DURING WELDING.

① FOR PILE SHELL THICKNESSES GREATER THAN ¼", USE A B–U4a WELD CONFIGURATION. SEE DETAIL "A".

APPROVED: NOVEMBER 22, 2002	STATE OF MINNESOTA DEPARTMENT OF TRANSPORTATION	REVISION: 11–06–2013	DETAIL NO.
STATE BRIDGE ENGINEER	PILE SPLICE (CAST–IN–PLACE CONCRETE PILES)		B201

NO.	DATE	BY	CHECK	DESIGN	REVISION / SUBMITTAL

DESIGNED BY: KR CHECKED BY: KJK

DRAWN BY: MSK CHECKED BY: KJK

AECOM Kimley»Horn

90% SUBMISSION - 01/22/16

METROPOLITAN COUNCIL

SOUTHWEST Green Line LRT Extension

CIVIL - VOLUME 4G
5TH AVENUE AND 7TH STREET
BRIDGE 27C18
BRIDGE DETAILS 1

DISCIPLINE: STRUCTURES

SHEET NAME: CBR27C18-BRG-SDT-007

SHEET 126 OF 148

Jan. 18 2016 03:35 pm V:\3400_ADC\CAD\SEGMENT E4\PLAN SHEETS\STRUCTURES\27C18\CBR27C18-BRG-SDT-007.dwg By: Victor.Madrid

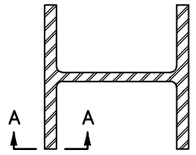

SECTION AT SPLICE

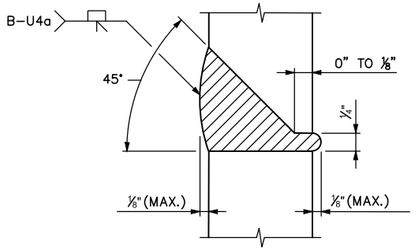

SECTION A-A

100% BUTT WELDED PILE SPLICE

NOTES:

CELLULOSIC TYPE ELECTRODES E-6010 OR E-6011 SHALL BE USED FOR 100% BUTT WELDED SPLICES.

ELECTRODES WHICH HAVE BECOME WET, SOILED OR DAMAGED SHALL NOT BE USED.

WELDING SHALL NOT BE DONE WHEN THE AMBIENT TEMPERATURE IS LOWER THAN 0° F. OR WHEN THE PILE IS WET OR EXPOSED TO FALLING RAIN OR SNOW. WHEN THE PILE METAL TEMPERATURE IS BELOW 32° F., THE PILE METAL IN THE AREA OF THE WELD SHALL BE HEATED TO A MINIMUM TEMPERATURE OF 70° F. AND MAINTAINED AT THIS TEMPERATURE DURING WELDING.

APPROVED: NOVEMBER 22, 2002	STATE OF MINNESOTA DEPARTMENT OF TRANSPORTATION	REVISION: 11-06-2013	DETAIL NO.
Daniel L Morgan STATE BRIDGE ENGINEER	PILE SPLICE (STEEL H BEARING PILES 10" TO 14")		B202

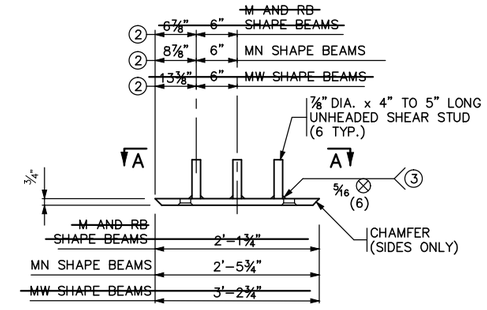

FRONT ELEVATION

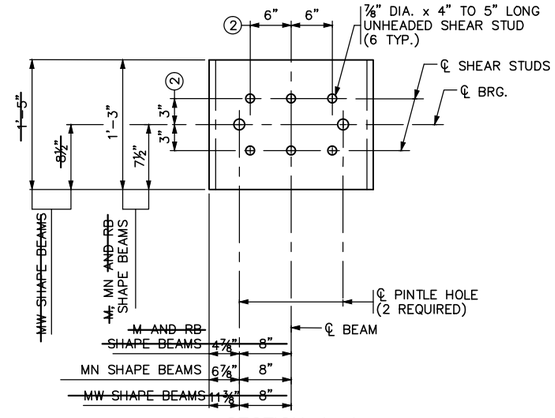

SECTION A-A

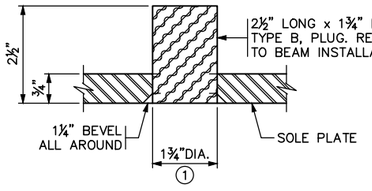

PINTLE HOLE DETAIL

NOTES:

MATERIAL TO BE STRUCTURAL STEEL PER MnDOT SPEC. 3306.

WELDED STUDS TO BE WELDABLE CARBON STEEL PER MnDOT SPEC. 3391.2D.

SOLE PLATE FOR BEARING ASSEMBLY TO BE GALVANIZED PER MnDOT SPEC. 3394 AFTER FABRICATION.

PINTLE HOLES SHALL BE FREE OF ZINC BUILD UP FROM GALVANIZING.

SOLE PLATES ARE INCIDENTAL TO PRESTRESSED CONCRETE BEAMS.

(1) FOR 1½" DIA. PINTLES.

(2) THESE DIMENSIONS MAY BE MODIFIED TO CLEAR PRESTRESSED STRANDS. HOWEVER, CHANGES MUST BE APPROVED BY THE ENGINEER.

(3) THE REQUIREMENTS FOR WELDING STUDS SHALL COMPLY WITH AASHTO/AWS D1.1.

APPROVED: SEPTEMBER 22, 2011	STATE OF MINNESOTA DEPARTMENT OF TRANSPORTATION	REVISED	DETAIL NO.
Nancy J Daubenberger STATE BRIDGE ENGINEER	SOLE PLATE (PRESTRESSED CONCRETE BEAMS) (FOR BEARINGS WITH PINTLES)		B303

NO.	DATE	BY	CHECK	DESIGN	REVISION / SUBMITTAL

DESIGNED BY: KR CHECKED BY: KJK
DRAWN BY: MSK CHECKED BY: KJK

AECOM Kimley»Horn

90% SUBMISSION - 01/22/16

METROPOLITAN COUNCIL

SOUTHWEST Green Line LRT Extension

CIVIL - VOLUME 4G
5TH AVENUE AND 7TH STREET
BRIDGE 27C18
DETAILS BRIDGE 2

DISCIPLINE: STRUCTURES

SHEET NAME: CBR27C18-BRG-SDT-008

SHEET 127 OF 148

Jan, 18 2016 03:36 pm v:\3400_ADC\CAD\SEGMENT E4\PLAN SHEETS\STRUCTURES\27C18\CBR27C18-BRG-SDT-008.dwg By: Victor.Madrid

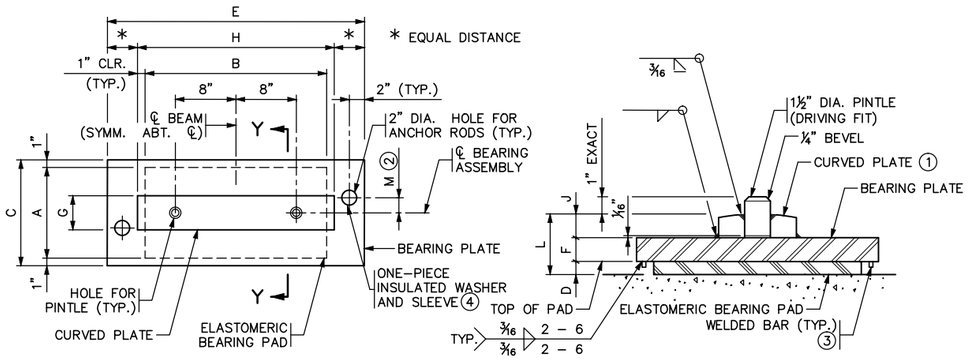

TABLE

ASSEMBLY TYPE	LOCATION	BEAM SIZE	BEARING PAD SIZE A	B	D	SHAPE FACTOR	BEARING PLATE SIZE C	E	F1	F ⑤	F2	CURVED PLATE SIZE G	H	J	ANCHOR ROD OFFSET +/-②	M	ASSY. HEIGHT L ⑤	CURVED PLATE R ①
F1	S. ABUT., P8, P9	MN45	12"	24"	½"	8.0	14"	38"	1⅞"	1½"	1⅛"	4½"	26"	1¼"			3¼"	16"
~~—~~	~~—~~	~~MW~~	~~16"~~	~~36"~~	~~½"~~	~~11.1~~	~~18"~~		~~1⅞"~~	~~1½"~~	~~1⅛"~~	~~4½"~~	~~38"~~	~~1¼"~~			~~3¼"~~	~~—~~

NOTES:

PROVIDE ELASTOMERIC MATERIALS AND PAD CONSTRUCTION PER SPEC. 3741.

PROVIDE STEEL PLATES PER SPEC. 3306.

PROVIDE ANCHOR RODS PER SPEC. 3385, TYPE A. GALVANIZE PER SPEC. 3392.

PROVIDE PINTLES PER SPEC. 3309.

GALVANIZE STRUCTURAL STEEL BEARING ASSEMBLY AFTER FABRICATION PER SPEC. 3394, EXCEPT AS NOTED.

~~PAYMENT FOR BEARING ASSEMBLY INCLUDES ALL MATERIAL ON THIS DETAIL.~~

ALL BEARINGS SHALL PROVIDE ELECTRICAL ISOLATION OF EMBEDDED STEEL ELEMENTS LOCATED ABOVE THE BEARING ASSEMBLIES FROM EMBEDDED STEEL ELEMENTS LOCATED BELOW THE BEARING ASSEMBLIES.

① THE MIN. RADIUS IS 16" UNLESS OTHERWISE SPECIFIED IN THE TABLE. THE MAX. RADIUS IS 24". FINISH TO 250 MICRO. THE FINISHED THICKNESS OF THE PLATE MAY BE 1⁄16" LESS THAN SHOWN.

② "+" DENOTES OFFSET AS SHOWN.
"-" DENOTES OFFSET OPPOSITE OF SHOWN.

③ ⅜" X ⅜" BAR INSTALLED ON BEARING PLATE AROUND PERIMETER OF BEARING PAD. BAR LENGTH IS 2" LESS THAN ADJACENT PAD DIMENSION, CENTERED ON PAD. CENTERLINE OF BAR TO EDGE OF PAD DIMENSION = ½".

④ INSULATED SLEEVE SHALL EXTEND A MINIMUM OF ½" BELOW BOTTOM OF BEARING PLATE

⑤ PLACE ANCHOR BOLTS USING APPROVED ELASTOMERIC GROUT..

DESIGN DATA:
MAXIMUM HORIZONTAL LOAD IS 70 KIPS FOR 1" PINTLES.

APPROVED: SEPTEMBER 22, 2011	STATE OF MINNESOTA DEPARTMENT OF TRANSPORTATION	REVISED	DETAIL NO.
Nancy Daubenberger STATE BRIDGE ENGINEER	CURVED PLATE BEARING ASSEMBLY (PRESTRESSED CONCRETE BEAMS) (FIXED)	11-06-2013 11-03-2015	B310

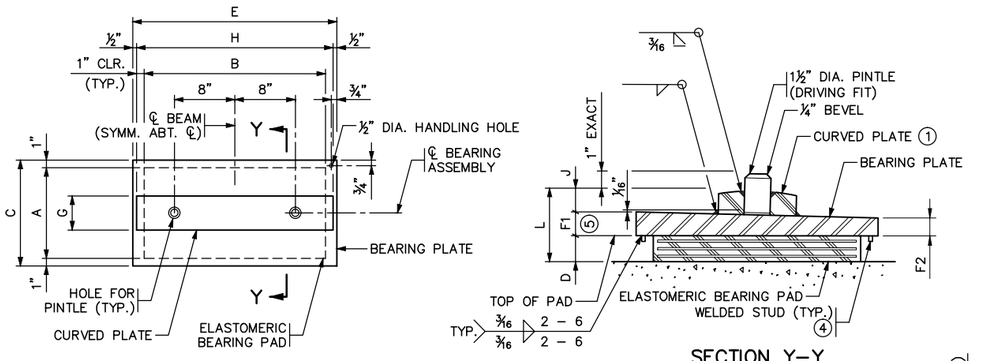

TABLE

ASSEMBLY TYPE	LOCATION	BEAM SIZE	BEARING PAD SIZE A	B	D	STEEL PLATES NO.	THICK.	LAMINATES NO.	THICK.	SHAPE FACTOR	BEARING PLATE SIZE C	E	F1	F ⑥	F2	CURVED PLATE SIZE G	H	J	ASSY. HEIGHT L ⑥	CURVED PLATE R ①
E1	PIER 1	MN45	14"	24"	1¼"	2	⅛"	1	½"	8.8	16"	27"	1⅞"	1½"	1⅛"	4½"	26"	1¼"	4"	16"
E2	PIER 6	MN45	12"	24"	5"	8	⅛"	7	½"	8.0	14"	27"	1⅞"	1½"	1⅛"	4½"	26"	1¼"	7¾"	16"
E3	PIER 7	MN45	12"	24"	3⅛"	5	⅛"	4	½"	8.0	14"	27"	1⅞"	1½"	1⅛"	4½"	26"	1¼"	5⅞"	16"
E4	PIER 10	MN45	10"	24"	3¾"	6	⅛"	5	½"	7.1	12"	27"	1⅞"	1½"	1⅛"	4½"	26"	1¼"	6½"	16"
E5	PIER 11	MN45	10"	24"	5"	8	⅛"	7	½"	7.1	12"	27"	1⅞"	1½"	1⅛"	4½"	26"	1¼"	7¾"	16"

NOTES:

PROVIDE ELASTOMERIC MATERIALS AND PAD CONSTRUCTION PER SPEC. 3741.

PROVIDE STEEL PLATES PER SPEC. 3306.

PROVIDE PINTLES PER SPEC. 3309.

GALVANIZE STRUCTURAL STEEL BEARING ASSEMBLY AFTER FABRICATION PER SPEC. 3394, EXCEPT AS NOTED.

~~PAYMENT FOR BEARING ASSEMBLY INCLUDES ALL MATERIAL ON THIS DETAIL.~~

① THE MIN. RADIUS IS 16" UNLESS OTHERWISE SPECIFIED IN THE TABLE. THE MAX. RADIUS IS 24". FINISH TO 250 MICRO. THE FINISHED THICKNESS OF THE PLATE MAY BE 1⁄16" LESS THAN SHOWN.

② DO NOT GALVANIZE THESE PLATES.

③ THE TOTAL THICKNESS SHOWN INCLUDES THE STEEL PLATES.

④ ⅜" X ⅜" BAR INSTALLED ON BEARING PLATE AROUND PERIMETER OF BEARING PAD. BAR LENGTH IS 2" LESS THAN ADJACENT PAD DIMENSION, CENTERED ON PAD. CENTERLINE OF BAR TO EDGE OF PAD DIMENSION = ½".

⑤ MARK THICKER SIDE OF SLOPED PLATES WITH AN "H" FOR PLACEMENT. SEE FRAMING PLAN SHEET NO. 48.

⑥ THICKNESS AT ℄ BEARING.

DESIGN DATA:
MAXIMUM HORIZONTAL LOAD IS 70 KIPS FOR 1" PINTLES.

APPROVED: SEPTEMBER 22, 2011	STATE OF MINNESOTA DEPARTMENT OF TRANSPORTATION	REVISED	DETAIL NO.
Nancy Daubenberger STATE BRIDGE ENGINEER	CURVED PLATE BEARING ASSEMBLY (PRESTRESSED CONCRETE BEAMS) (EXPANSION)	11-03-2015	B311

NO.	DATE	BY	CHECK	DESIGN	REVISION / SUBMITTAL

DESIGNED BY: KR CHECKED BY: KJK
DRAWN BY: MSK CHECKED BY: KJK

AECOM Kimley»Horn

90% SUBMISSION - 01/22/16

METROPOLITAN COUNCIL

SOUTHWEST Green Line LRT Extension

CIVIL - VOLUME 4G
5TH AVENUE AND 7TH STREET
BRIDGE 27C18
BRIDGE DETAILS 3

DISCIPLINE: STRUCTURES
SHEET NAME: CBR27C18-BRG-SDT-009

SHEET 128 OF 148

Jan. 18 2016 03:36 pm V:\3400_ADC\CAD\SEGMENT E4\PLAN SHEETS\STRUCTURES\27C18\CBR27C18-BRG-SDT-009.dwg By: Victor.Madrid

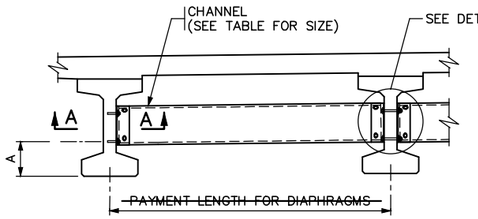

PART TRANSVERSE SECTION AT DIAPHRAGM

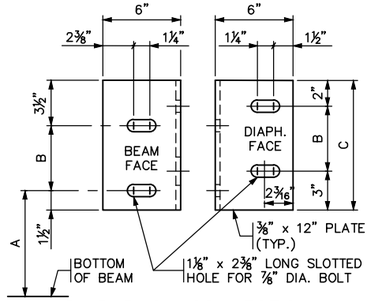

DIAPHRAGM CONNECTION

FOR 36M AND MN45 BEAMS

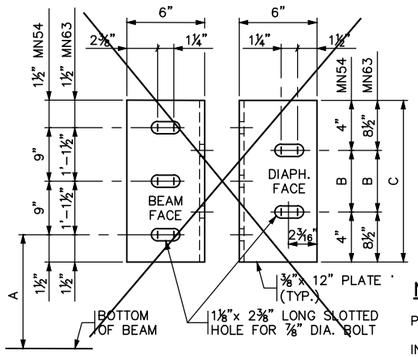

DIAPHRAGM CONNECTION

FOR MN54 AND MN63 BEAMS

TABLE				
BEAM HEIGHT	DISTANCE			CHANNEL SIZE
	A	B	C	
~~36M~~	~~1' 3"~~	~~7"~~	~~1' 0"~~	~~C12x20.7~~
~~45M~~	~~1'-3¼"~~	~~1' 1"~~	~~1' 6"~~	~~MC18x42.7~~
~~54M~~	~~1'-2¼"~~	~~1' 1"~~	~~2' 6"~~	~~MC18x42.7~~
MN45	1'-7¾"	7"	1'-0"	C12x20.7
~~MN54~~	~~1'-7¾"~~	~~1' 1"~~	~~1' 9"~~	~~MC18x42.7~~
~~MN63~~	~~1'-7¾"~~	~~1' 1"~~	~~2' 6"~~	~~MC18x42.7~~

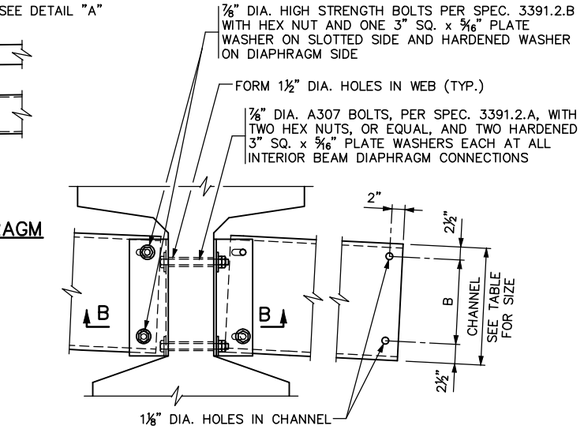

DETAIL "A"

INTERIOR BEAM WITH CONTINUOUS LINE OF DIAPHRAGMS

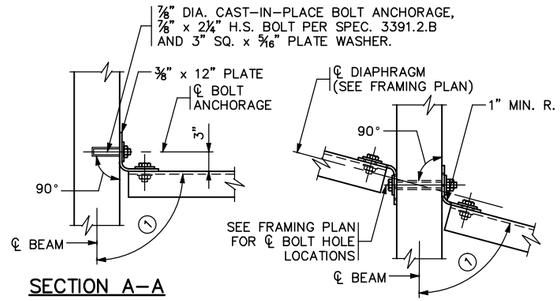

SECTION A–A

TYPICAL SECTION AT ALL FASCIA BEAMS

SECTION B–B

TYPICAL SECTION AT INTERIOR BEAM WITH CONTINUOUS OR STAGGERED INTERMEDIATE DIAPHRAGMS

NOTES:

PROVIDE STEEL PER SPEC. 3306.

INSTALL PER SPEC. 2405.3.K.

TORQUE ALL BOLTS, INCLUDING ANCHOR BOLTS TO 80 FT.–LBS.

SHOP BEND THE LEG OF THE 12" PLATE TO CONFORM TO THE DIAPHRAGM. A ⅜" x 6" x 6" ANGLE MAY BE USED FOR DIAPHRAGMS PERPENDICULAR TO BEAMS.

~~INCLUDE ALL STRUCTURAL STEEL SHOWN ON THIS DETAIL, INCLUDING BOLTS AND WASHERS, IN UNIT PRICE BID FOR DIAPHRAGMS FOR PRESTRESSED BEAMS.~~

BENT PLATES MAY BE USED IN PLACE OF CHANNELS IF THE BENT PLATES HAVE THE SAME HEIGHT AS THE CHANNELS THEY REPLACE, ARE 5/16" IN THICKNESS, AND HAVE LEGS 5" LONG.

GALVANIZE STEEL PLATES AND SHAPES PER SPEC. 3394.

GALVANIZE BOLTS, NUTS AND WASHERS PER SPEC. 3392.

① FOR SKEW ANGLES UNDER 20°, USE 90° LESS THE SKEW ANGLE. FOR SKEW ANGLES OVER 20°, USE 90°.

APPROVED: NOVEMBER 03, 2015	STATE OF MINNESOTA DEPARTMENT OF TRANSPORTATION	REVISED	DETAIL NO.
STATE BRIDGE ENGINEER	STEEL INTERMEDIATE DIAPHRAGM (FOR 36M – 54M, MN45 – MN63 PRESTRESSED CONCRETE BEAMS)		B403

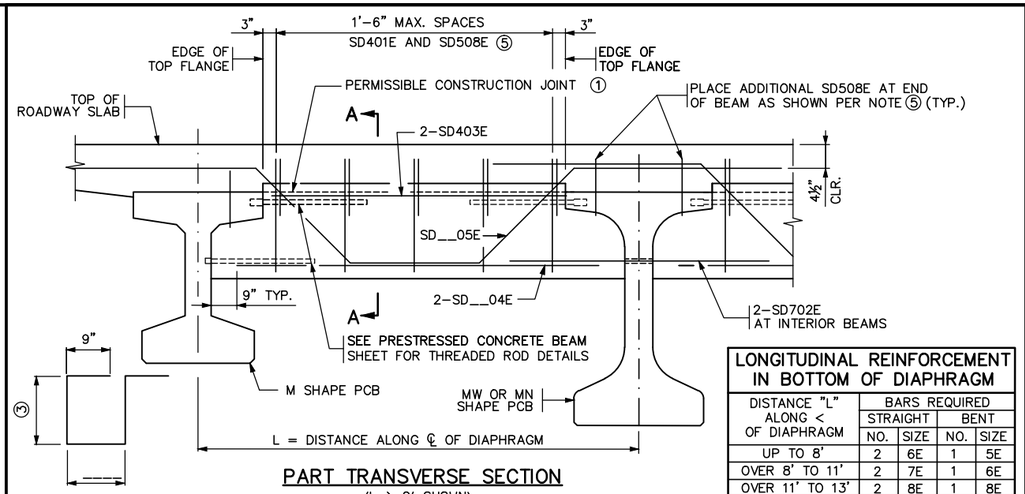

PART TRANSVERSE SECTION

(L > 8' SHOWN)

SD401E

LONGITUDINAL REINFORCEMENT IN BOTTOM OF DIAPHRAGM				
DISTANCE "L" ALONG < OF DIAPHRAGM	BARS REQUIRED			
	STRAIGHT		BENT	
	NO.	SIZE	NO.	SIZE
UP TO 8'	2	6E	1	5E
OVER 8' TO 11'	2	7E	1	6E
OVER 11' TO 13'	2	8E	1	8E
OVER 13' TO 15'	2	9E	1	10E
OVER 15' TO 18'	2	11E	1	11E

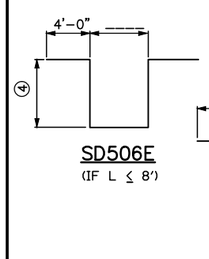

SD506E

(IF L ≤ 8')

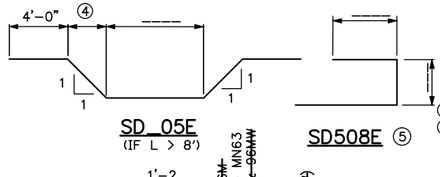

SD_05E

(IF L > 8')

SD508E ⑤

BILL OF REINFORCEMENT FOR END DIAPHRAGM				
BAR	NO.	LENGTH	SHAPE	LOCATION
SD401E				VERTICAL TIE
SD702E		5'–0"		LONG. THRU BEAM
SD403E				LONG. TOP
SD_04E				LONG. BOTTOM
SD_05E				LONGITUDINAL
SD506E				LONGITUDINAL
SD507E				LONGITUDINAL
SD508E				VERTICAL TIE

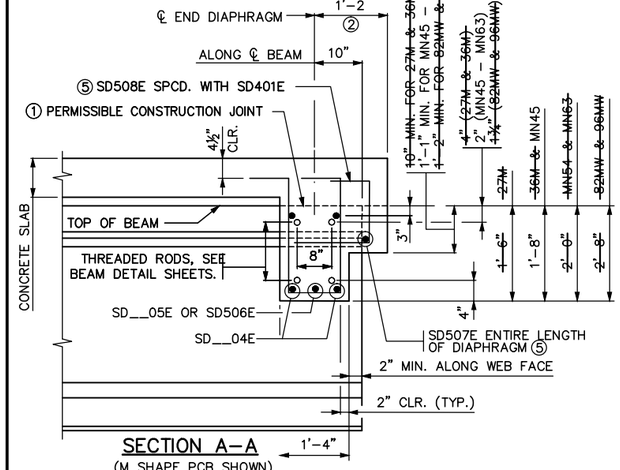

SECTION A–A

(M SHAPE PCB SHOWN)

NOTES:

CONCRETE FOR END DIAPHRAGMS SHALL BE THE SAME MIX AS USED IN DECK.

~~QUANTITIES FOR END DIAPHRAGM CONCRETE AND REINFORCEMENT SHOWN ON THIS DETAIL SHALL BE LISTED IN SUPERSTRUCTURE QUANTITIES.~~

THREADED RODS ARE INCIDENTAL TO PRESTRESSED CONCRETE BEAMS.

① USE OF CONSTRUCTION JOINT REQUIRES CLEARANCE FOR EXPANSION DEVICE. WHEN CONSTRUCTION JOINT IS USED AT THIS LOCATION, DIAPHRAGM FALSEWORK SHALL REMAIN INPLACE UNTIL COMPLETION OF SLAB CURING PERIOD.

② PERPENDICULAR TO CENTERLINE OF DIAPHRAGM.

③ 1'–11" (27M); 2'–1" (36M AND MN45); 2'–5" (MN54 AND MN63); 3'–1" (82MW AND 96MW). BASED ON 3" STOOL AND 9" DECK.

④ 1'–10" (27M); 2'–0" (36M AND MN45); 2'–4" (MN54 AND MN63); 3'–0" (82MW AND 96MW). BASED ON NOTE ③ .

⑤ ADD SD507E AND SD508E ONLY IF NO. OF BARS AND LENGTHS ARE INCLUDED IN BILL OF REINFORCEMENT. SPACE SD508E AT 1'–6" MAX. FOR ENTIRE LENGTH OF DIAPHRAGM. REFER TO "PART TRANSVERSE SECTION" ABOVE.

APPROVED: SEPTEMBER 22, 2011	STATE OF MINNESOTA DEPARTMENT OF TRANSPORTATION	REVISED 04–17–2013 11–06–2013	DETAIL NO.
STATE BRIDGE ENGINEER	CONCRETE END DIAPHRAGM (27M & 36M, MN45 – MN63, 82MW & 96MW PRESTRESSED CONCRETE BEAMS) (PARAPET ABUTMENT)		B814

NO.	DATE	BY	CHECK	DESIGN	REVISION / SUBMITTAL

DESIGNED BY: KR CHECKED BY: KJK
DRAWN BY: MSK CHECKED BY: KJK

AECOM Kimley»Horn

90% SUBMISSION - 01/22/16

METROPOLITAN COUNCIL

SOUTHWEST Green Line LRT Extension

CIVIL - VOLUME 4G
5TH AVENUE AND 7TH STREET
BRIDGE 27C18
BRIDGE DETAILS 4

DISCIPLINE: STRUCTURES
SHEET NAME: CBR27C18-BRG-SDT-010

SHEET 129 OF 148

Jan, 18 2016 03:37 pm V:\3400_ADC\CAD\SEGMENT E4\PLAN SHEETS\STRUCTURES\27C18\CBR27C18-BRG-SDT-010.dwg By: Victor.Madrid

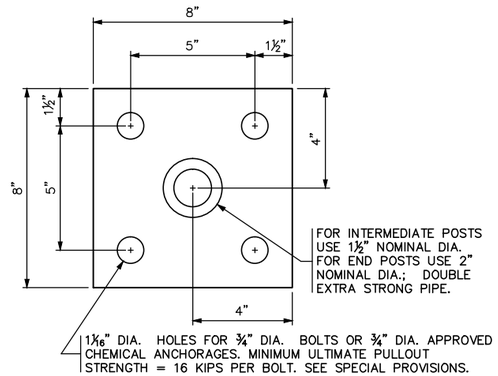

PLAN VIEW – TYPE A

ESTIMATED WEIGHT = 12 OR 14 LBS.

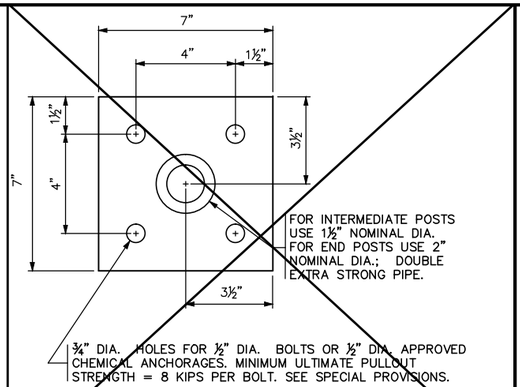

PLAN VIEW – TYPE B

ESTIMATED WEIGHT = 10 OR 12 LBS.

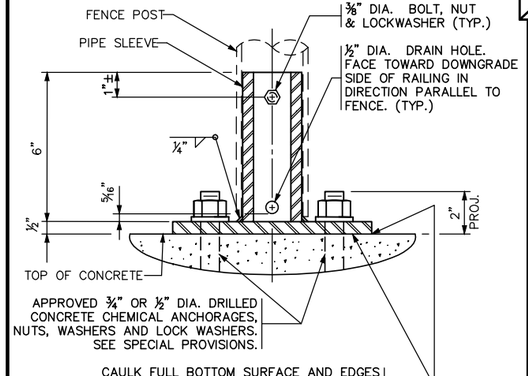

TYPICAL SECTION

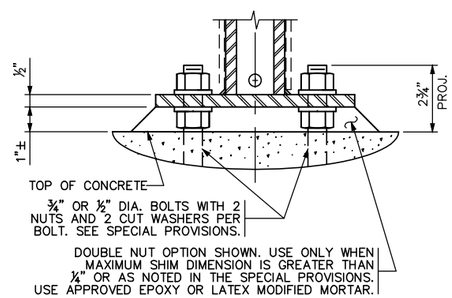

GROUT ALTERNATE

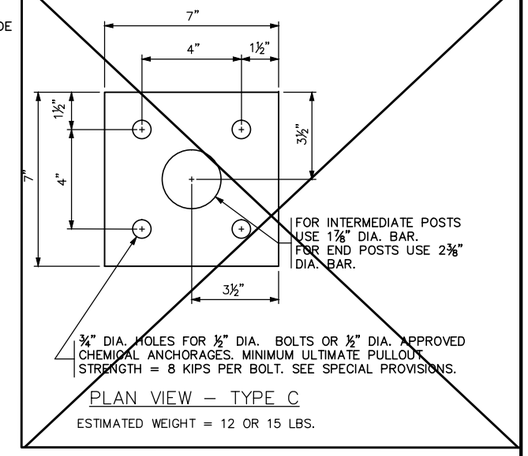

PLAN VIEW – TYPE C

ESTIMATED WEIGHT = 12 OR 15 LBS.

NOTES:

STRUCTURAL STEEL PER Mn/DOT SPEC. 3306

STRUCTURAL PIPE PER Mn/DOT SPEC. 3362

GALVANIZE THE FENCE POST ANCHORAGE AFTER FABRICATION PER Mn/DOT SPEC. 3394. GALVANIZE THE FASTENERS PER Mn/DOT SPEC. 3392.

DOUBLE EXTRA STRONG PIPE WEIGHTS:
1½" NOMINAL DIA. = 6.41 LBS./FT.
2" NOMINAL DIA. = 9.03 LBS./FT.

APPROVED: NOVEMBER 22, 2002	STATE OF MINNESOTA DEPARTMENT OF TRANSPORTATION	REVISION	DETAIL NO.
Daniel L Worgan STATE BRIDGE ENGINEER	FENCE POST ANCHORAGE		B905

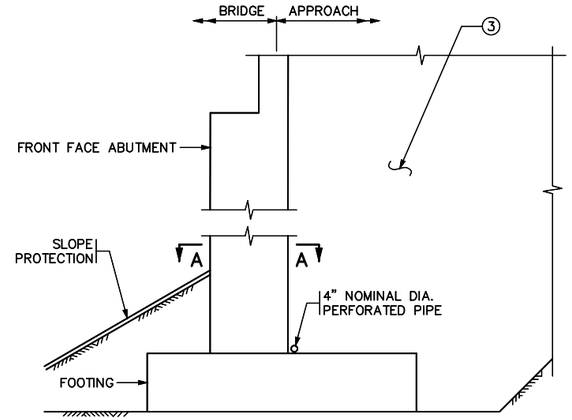

SECTION THROUGH PARAPET AND ~~SEMI-INTEGRAL~~ ABUTMENTS

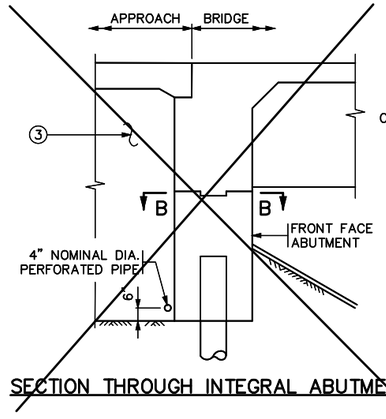

SECTION THROUGH INTEGRAL ABUTMENT

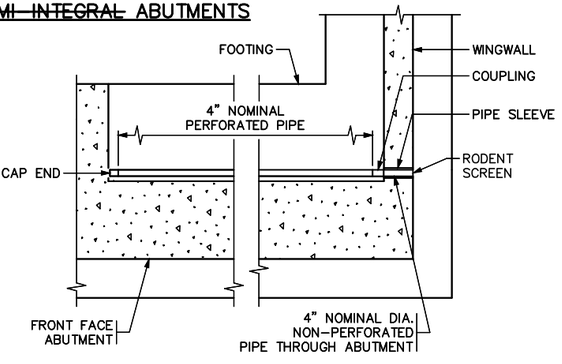

SECTION A–A

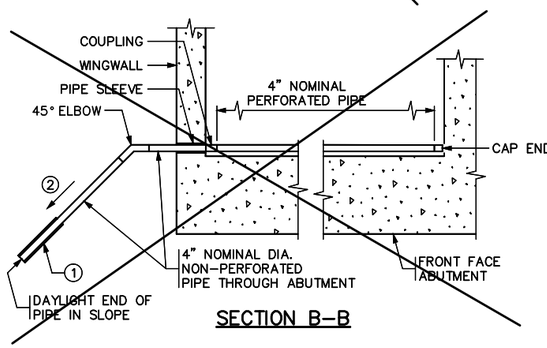

SECTION B–B

NOTES:

~~PAYMENT WILL BE INCLUDED IN THE SINGLE LUMP SUM PRICE FOR "DRAINAGE SYSTEM TYPE (B910)", INCLUDES BUT IS NOT LIMITED TO 4" DIAMETER PERFORATED AND NON PERFORATED PIPE, ELBOWS, END CAPS, COUPLINGS, SLEEVES AND PREGAST CONCRETE HEADWALLS.~~

ALL PIPE TO COMPLY WITH SPEC. 3245.

WRAP PERFORATED PIPE WITH GEOTEXTILE PER SPEC. 3733, TYPE 1. ATTACH TO PIPE PER SPEC. 2502.

(1) AT CONTRACTORS OPTION, MAY TIE APPROACH PANEL DRAINAGE SYSTEM AND ABUTMENT DRAINAGE SYSTEM INTO A SINGLE PRECAST CONCRETE HEADWALL OR INTO A CATCH BASIN AS LONG AS A MINIMUM OF 1% POSITIVE SLOPE CAN BE MANTAINED.

USE PRECAST CONCRETE HEADWALL WITH RODENT SCREEN. SEE STANDARD PLATE 3131 FOR DETAILS.

(2) ⅛" PER FT. MINIMUM SLOPE.

(3) REFER TO GRADING PLANS FOR ABUTMENT BACKFILL REQUIREMENTS.

APPROVED: JANUARY 13, 2015	STATE OF MINNESOTA DEPARTMENT OF TRANSPORTATION	REVISED	DETAIL NO.
Nancy Daubenberger STATE BRIDGE ENGINEER	DRAINAGE SYSTEM		B910 (MOD)

NO.	DATE	BY	CHECK	DESIGN	REVISION / SUBMITTAL

DESIGNED BY: KR CHECKED BY: KJK
DRAWN BY: MSK CHECKED BY: KJK

AECOM Kimley»Horn

90% SUBMISSION - 01/22/16

METROPOLITAN COUNCIL

SOUTHWEST Green Line LRT Extension

CIVIL - VOLUME 4G
5TH AVENUE AND 7TH STREET
BRIDGE 27C18
BRIDGE DETAILS 5

DISCIPLINE: STRUCTURES
SHEET NAME: CBR27C18-BRG-SDT-011

SHEET 130 OF 148

Jan. 18 2016 03:37 pm v:\3400_ADC\CAD\SEGMENT E4\PLAN SHEETS\STRUCTURES\27C18\CBR27C18-BRG-SDT-011.dwg By: Victor.Madrid

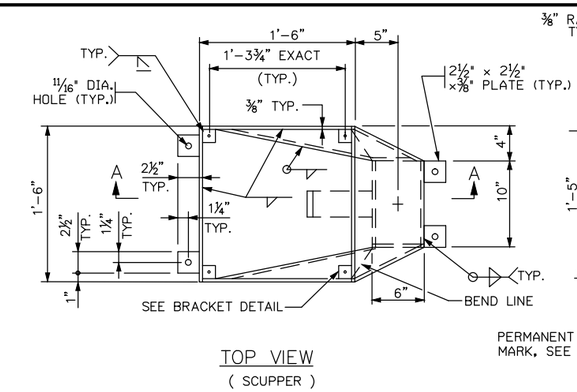

TOP VIEW
(SCUPPER)

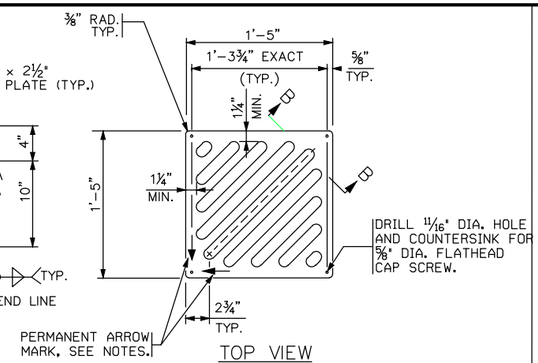

TOP VIEW
(GRATE)

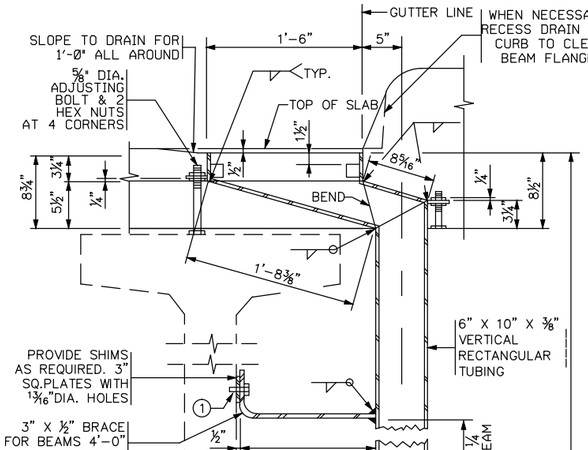

SECTION A–A
(CONCRETE BEAM SHOWN)

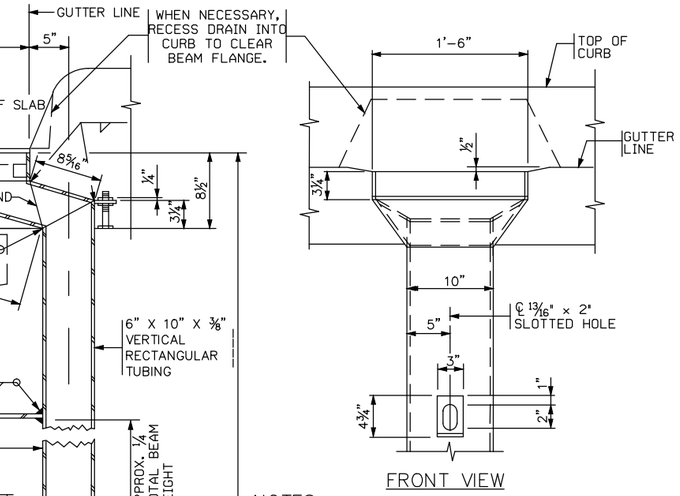

FRONT VIEW

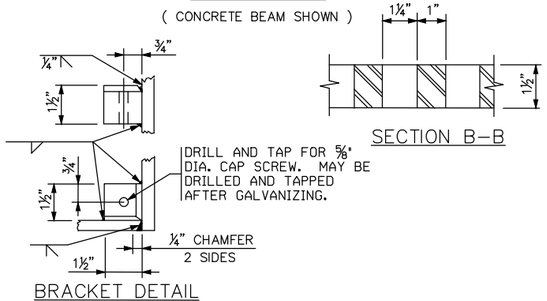

SECTION B–B

BRACKET DETAIL

NOTES:

ALL STEEL PLATES PER Mn/DOT SPEC. 3306. FABRICATE GRATE USING AUTOMATICALLY CONTROLLED CUTTING TORCH.

CAST IRON GRATE PER Mn/DOT SPEC. 3321, CLASS 35B, MAY BE USED AS AN ALTERNATE.

WORKMANSHIP AND FABRICATION PER Mn/DOT SPEC. 2471.

BLAST CLEAN SCUPPER AND GRATE AFTER FABRICATION. GALVANIZE, EXCEPT CAST IRON, PER Mn/DOT SPEC. 3394.

GALVANIZE HARDWARE PER Mn/DOT SPEC. 3392.

INSTALL GRATE WITH ARROW ON CURB SIDE AND IN DIRECTION OF FLOW.

~~PAYMENT FOR FLOOR DRAIN, TYPE .... SHALL INCLUDE ALL MATERIAL ON THIS DETAIL.~~

GRATE OPENING AREA IS 106 SQ. IN.

(1) ATTACH TO BEAM WITH ¾" DIA. BOLT, LOCKWASHER AND NUT AS REQUIRED. SEE SPECIAL PROVISIONS FOR APPROVED ANCHORAGE REQUIRED FOR CONCRETE BEAMS. ANCHORAGE TO MISS DRAPED STRANDS.

APPROVED: NOVEMBER 22, 2002	STATE OF MINNESOTA DEPARTMENT OF TRANSPORTATION	REVISION	DETAIL NO.
Daniel J. Wogsyan STATE BRIDGE ENGINEER	BRIDGE OFFSET FLOOR DRAIN (WELDED BOX)		B705

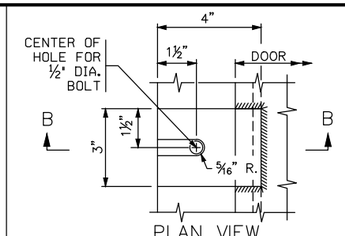

PLAN VIEW

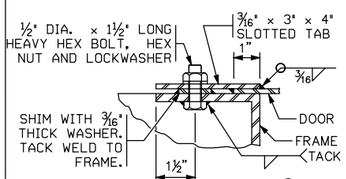

SECTION B-B ③
DOOR LATCH DETAIL

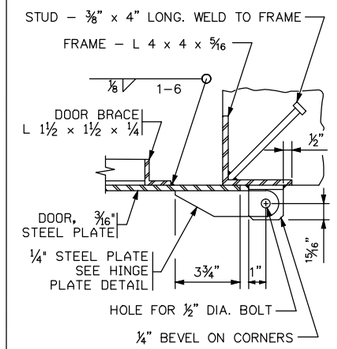

SECTION A–A

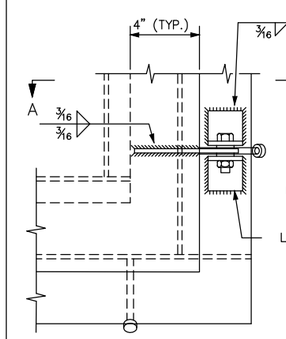

FRONT VIEW

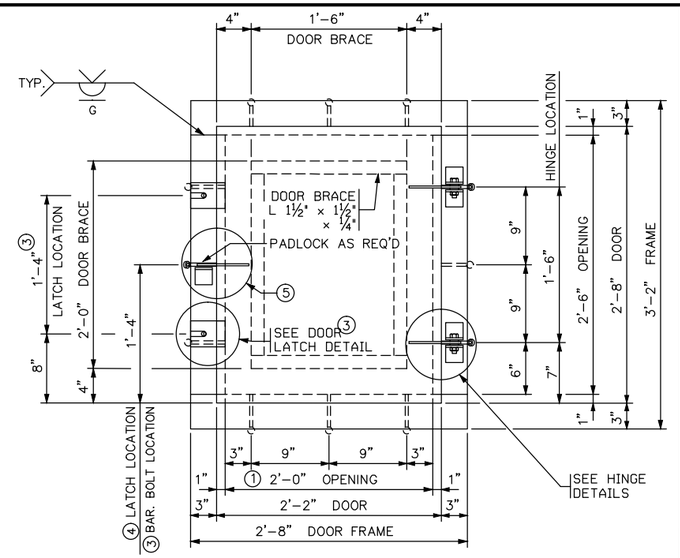

FRONT ELEVATION
APPROX. WEIGHT: 90 LBS.

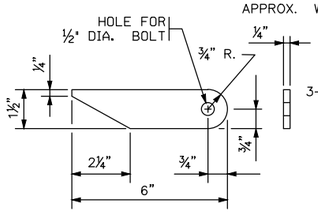

HINGE PLATE DETAIL

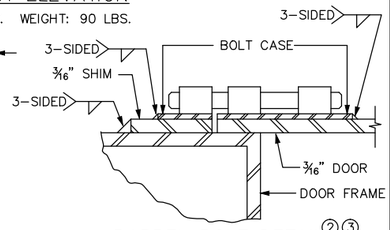

BARREL BOLT DETAIL ②③

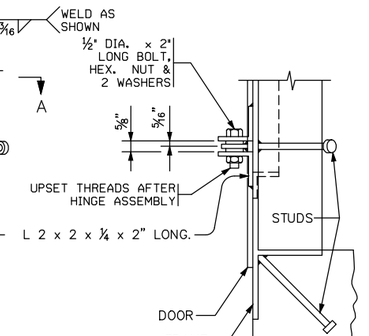

HINGE DETAILS
SIDE VIEW

NOTES:

WELDING PER Mn/DOT SPEC. 2471.

DOOR AND FRAME TO BE FLAT AFTER FABRICATION.

GALVANIZE STRUCTURAL SHAPES AFTER FABRICATION PER Mn/DOT SPEC. 3394.

GALVANIZE HARDWARE PER Mn/DOT SPEC. 3392.

~~ALL MATERIAL ON THIS DETAIL TO BE INCLUDED IN THE PRICE BID FOR OTHER ITEMS.~~

ALL STEEL TO BE 3306, UNLESS OTHERWISE NOTED.

DOOR TO BE LOCATED AWAY FROM TRAFFIC LANES.

(1) DIMENSION TRANSVERSE TO ℄ BRIDGE WHEN IN HORIZONTAL POSITION TO MINIMIZE EFFECT ON THE BOTTOM SLAB REINFORCEMENT.

(2) 4" BARREL BOLT (STANLEY NO. 1084 OR EQUAL)

(3) HORIZONTAL POSITION ONLY

(4) VERTICAL POSITION ONLY

(5) BARREL BOLT - HORIZONTAL POSITION
LATCH PLATE & ANGLE - VERTICAL POSITION

APPROVED: NOVEMBER 22, 2002	STATE OF MINNESOTA DEPARTMENT OF TRANSPORTATION	REVISION	DETAIL NO.
Daniel J. Wogsyan STATE BRIDGE ENGINEER	INSPECTION DOOR (IN VERTICAL OR HORIZONTAL POSITION)		B942

NO.	DATE	BY	CHECK	DESIGN	REVISION / SUBMITTAL

DESIGNED BY: KR CHECKED BY: KJK
DRAWN BY: MSK CHECKED BY: KJK

AECOM Kimley»Horn

90% SUBMISSION - 01/22/16

METROPOLITAN COUNCIL

SOUTHWEST Green Line LRT Extension

CIVIL - VOLUME 4G
5TH AVENUE AND 7TH STREET
BRIDGE 27C18
BRIDGE DETAILS 6

DISCIPLINE: STRUCTURES
SHEET NAME: CBR27C18-BRG-SDT-012

SHEET 131 OF 148

Jan. 18 2016 03:38 pm V:\3400_ADC\CAD\SEGMENT E4\PLAN SHEETS\STRUCTURES\27C18\CBR27C18-BRG-SDT-012.dwg By: Victor.Madrid

CONCRETE WEARING COURSE

☐ LOW SLUMP

☐ OTHER _____
TYPE OR MANUFACTURER

EXPANSION JOINTS

JOINT MANUFACTURER

MANUFACTURER'S IDENTIFICATION _____
MFR'S No. AND/OR LETTER DESIGNATION FOR JOINT USED

GLAND MANUFACTURER _____
NAME AND ADDRESS (CITY, STATE)

SIZE OF GLAND _____

MANUFACTURER'S IDENTIFICATION _____
MFR'S No. AND/OR LETTER DESIGNATION FOR GLAND USED

ELASTOMERIC BEARING PADS

PAD MANUFACTURER _____
NAME AND ADDRESS (CITY, STATE)

SPECIAL SURFACE FINISH

SYSTEM: _____ COLOR: _____

FINISHING ROADWAY FACES OF BARRIER RAILING

TYPE: _____ COLOR: _____

ANTI–GRAFFITI COATING

MANUFACTURER _____
NAME AND ADDRESS (CITY, STATE)

PRODUCT NAME: _____ LOCATION: _____

PAINT SYSTEM

Mn/DOT SPECIFICATION NUMBER _____
2478 OR 2479 OR OTHER

MANUFACTURER _____
NAME AND ADDRESS (CITY, STATE)

PRIME COAT _____
Mn/DOT MATERIAL SPECIFICATION NUMBER

INTERMEDIATE COAT _____
Mn/DOT MATERIAL SPECIFICATION NUMBER

FINISH COAT _____ _____
Mn/DOT MATERIAL SPECIFICATION NUMBER COLOR

PLAN QUALITY

RATE 1 (AGREE), 2 (NEUTRAL), OR 3 (DISAGREE, PLEASE COMMENT BELOW)

DIMENSIONING AND DETAILING ADEQUATELY DESCRIBED REQUIRED CONSTRUCTION. _____
BAR LISTS AND QUANTITIES WERE TYPICALLY COMPLETE AND FREE OF ERRORS. _____
SCALE OF DRAWINGS AND OVERALL LEGIBILITY OF LINES AND TEXT WAS GOOD. _____
(SB) SPECIAL PROVISIONS ADEQUATELY DESCRIBED SPECIAL WORK AND PAYMENT. _____

COMMENTS: _____

NUMBER OF BRIDGE
SUPPLEMENTAL AGREEMENTS: _____ COST: $ _____

LIST SIGNIFICANT ERRORS OR OMISSIONS IN PLAN DETAILS OR PAY QUANTITIES IN THE SPACE PROVIDED AT RIGHT.

BRIDGE REMOVAL / BRIDGE OPENING

NUMBER OF AND DATE OLD BRIDGE WAS REMOVED (IF APPLICABLE):

BRIDGE NUMBER _____ DATE REMOVED _____

DATE NEW BRIDGE WAS OPENED TO TRAFFIC _____

NOTIFY THE BRIDGE OFFICE BRIDGE MANAGEMENT UNIT WITH THIS INFORMATION AS SOON AS POSSIBLE. (651) 366–4557

OTHER ITEMS ①

① UTILITIES ADDED DURING CONSTRUCTION AND SPECIALTY ITEMS.

FINAL QUANTITIES ENTERED ON SCHEDULE OF QUANTITIES: YES ☐ NO ☐

SUMMARY OF SIGNIFICANT AS–BUILT CHANGES

THE AS–BUILT INFORMATION WAS ADDED TO THE PLAN BY:

_____ _____
INSPECTOR(S) SIGNATURE DATE

CHECKED BY: _____ _____
PROJECT ENGINEER/SUPERVISOR SIGNATURE DATE

AT THE TIME OF THE FINAL, THIS COMPLETED AS–BUILT BRIDGE DATA SHEET MUST BE SUBMITTED TO THE BRIDGE OFFICE – ATTN: REGIONAL CONSTRUCTION ENGINEER (MS610).

REVISION: 10–28–2008

APPROVED: SEPTEMBER 26, 2003
Daniel L Hegeon
STATE BRIDGE ENGINEER

AS–BUILT DETAILS
(AS NEEDED)

FIG. 5–397.900

TITLE:	DES:	DR:	APPROVED:	BRIDGE NO.
AS–BUILT BRIDGE DATA	CHK:	CHK:		27C18
	SHEET NO. 132 OF 148 SHEETS			

Jan. 18 2016 03:38 pm V:\3400_ADC\CAD\SEGMENT E4\PLAN SHEETS\STRUCTURES\27C18\CBR27C18-BRG-SDT-013.dwg By: Victor.Madrid

CONTRACTED PROFILE

SCALE HOR: 0 100'

SCALE VER: 0 20'

PROFILE GRADE T/RAIL TRACK 2 (FG-EB-TRK-E4)

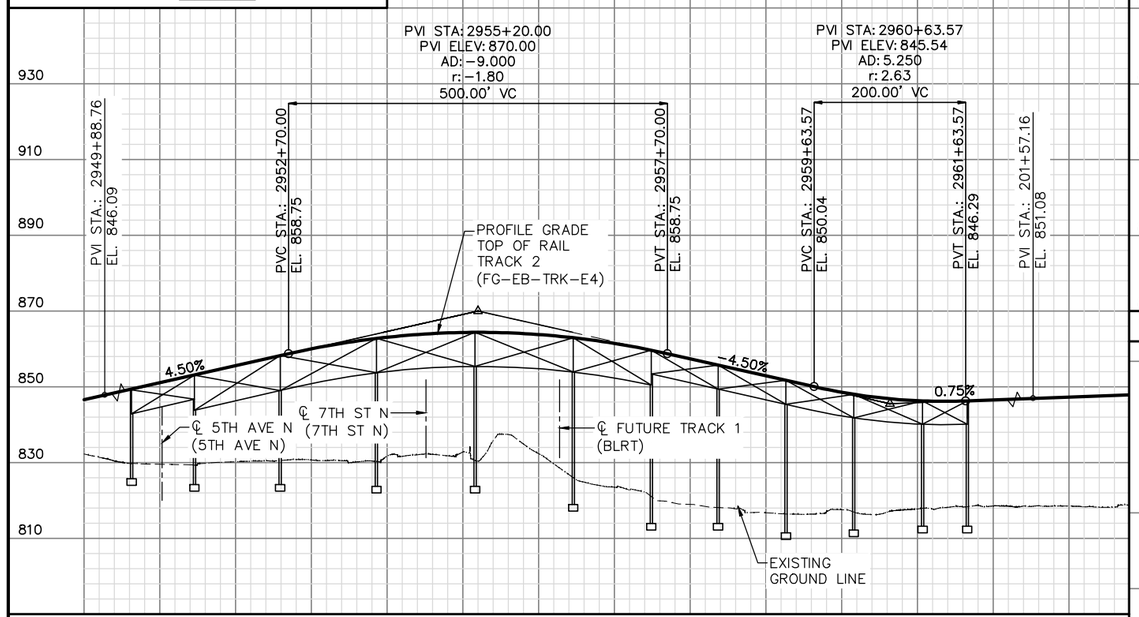

PLAT

SCALE: 0 100'

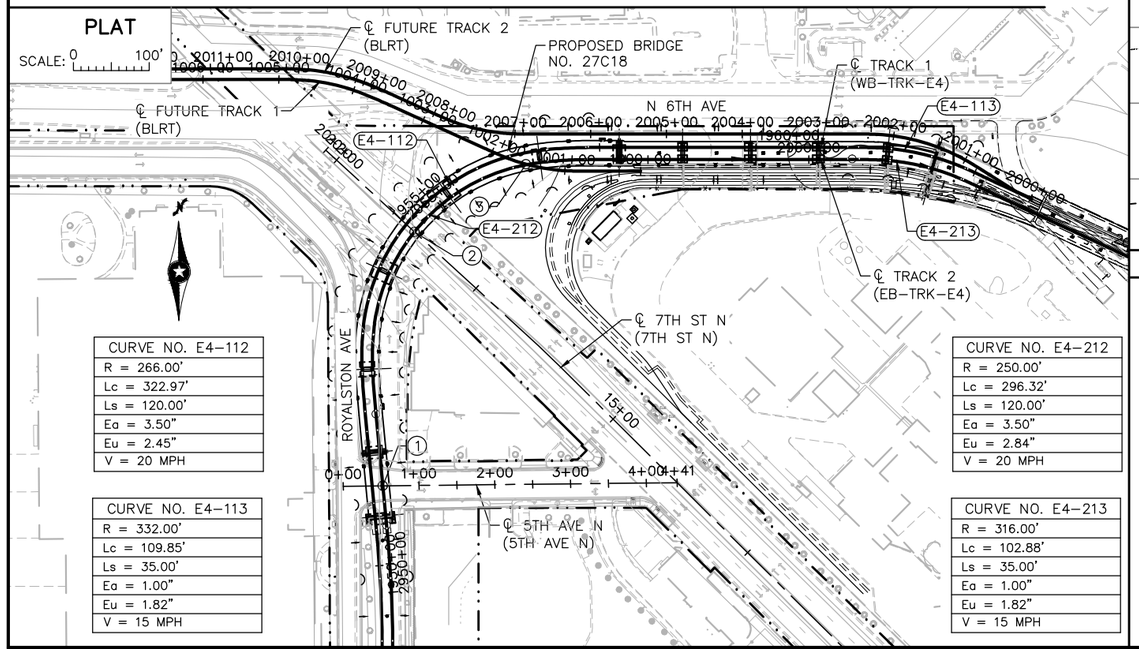

CURVE NO. E4-112
R = 266.00'
Lc = 322.97'
Ls = 120.00'
Eq = 3.50"
Eu = 2.45"
V = 20 MPH

CURVE NO. E4-113
R = 332.00'
Lc = 109.85'
Ls = 35.00'
Eq = 1.00"
Eu = 1.82"
V = 15 MPH

CURVE NO. E4-212
R = 250.00'
Lc = 296.32'
Ls = 120.00'
Eq = 3.50"
Eu = 2.84"
V = 20 MPH

CURVE NO. E4-213
R = 316.00'
Lc = 102.88'
Ls = 35.00'
Eq = 1.00"
Eu = 1.82"
V = 15 MPH

PROFILE GRADE 5TH AVENUE NORTH (5TH AVE N)

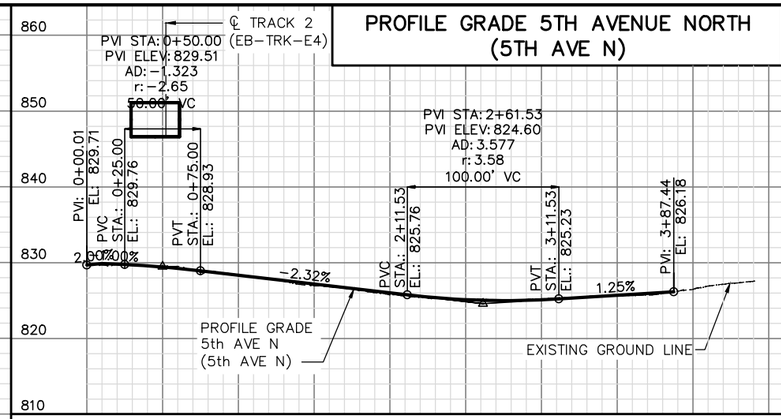

CONTRACTED PROFILE

SCALE HOR: 0 50'

SCALE VER: 0 10'

PROFILE GRADE 7TH STREET NORTH (7TH ST N)

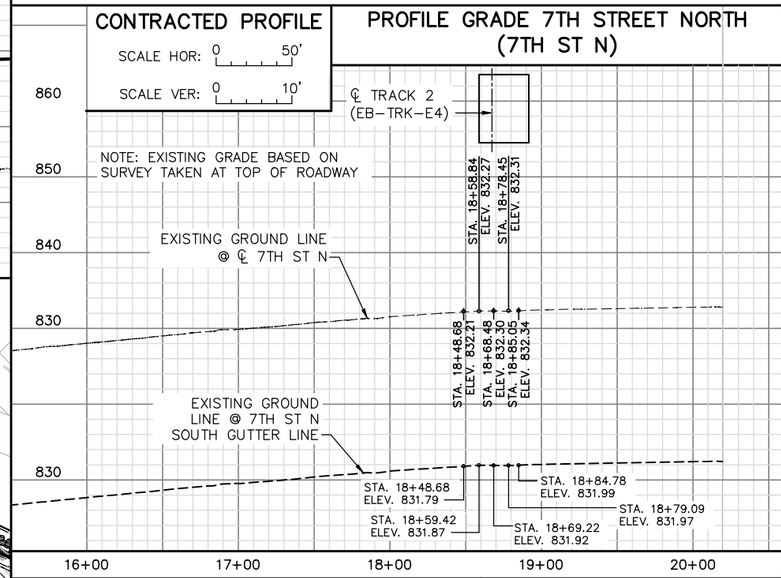

NOTES:

1. CONTROL POINT 1
   ℄ TRACK 2 (EB-TRK-E4) STA. 2951+05.41
   ℄ 5TH AVE (5TH AVE N) STA. 0+52.25
   X = 525958.153
   Y = 169922.367
   ANGLE = 94°48'42.6" (T.T.C)
2. CONTROL POINT 2
   ℄ TRACK 2 (EB-TRK-E4) STA. 2954+53.85
   ℄ 7TH ST N (7TH ST N) STA. 18+60.43
   X = 526001.151
   Y = 170257.402
   ANGLE = 93°50'28.0" (T.T.C.)
3. CONTROL POINT 3
   ℄ TRACK 2 (EB-TRK-E4) STA. 2956+29.51
   ℄ FUTURE TRACK 1 STA. 1001+51.41
   X = 526148.834
   Y = 170345.712
   ANGLE = 26°26'28.0" (T.T.C.)

INDEX MAP

SEC 22 T 29 N R 24 W

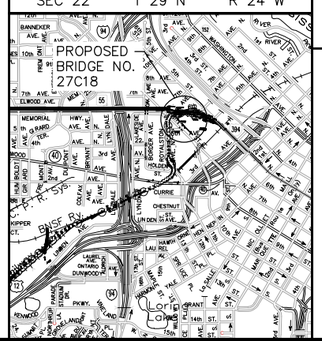

LOCATION ENGINEER'S OBSERVATIONS AT BRIDGE SITE

1. SPECIAL FEATURES: WATERFALLS, DAMS, FLOODS, ICE, DEBRIS SLIDING BANKS, RECREATIONAL BOATING.
2. OTHER BRIDGES OR CULVERTS OVER THE SAME STREAM (PARTICULARY STRUCTURES WHICH CARRY HIGH WATER WITHOUT OVERFLOW OF ROADWAY): GIVEN LOCATION, TYPE, LENGTH, HEIGHT ABOVE HIGH WATER, CROSS-SECTIONAL AREA ETC.
3. APPARENT HIGHWATER ELEVATION OBTAINED FROM:
4. OTHER DATA: APPROX. VELOCITY OF WATER AT TIME OF SURVEY.

HYDRAULIC ENGINEER'S RECOMMENDATION

DATE:

STREAM OR DITCH DESIGNATION

DRAINAGE AREA

MAX FLOOD ON RECORD

DESIGN FLOOD (YR. FREQ.): C.F.S.
HEADWATER ELEVATION: FT.
DESIGN MEAN VELOCITY THROUGH STRUCTURE F.P.S.
TOTAL STAGE INCREASE FT.
LOW MEMBER AT OR ABOVE ELEVATION FT.

WATERWAY AREA REQUIRED BELOW ELEV. = SQ. FT.
AT RIGHT ANGLES TO CHANNEL

BASIC FLOOD (100 YR. FREQ.) C.F.S.
HEADWATER ELEVATION: FT.
TOTAL STAGE INCREASE FT.
MEAN VELOCITY THROUGH STRUCTURE

FLOWLINE ELEVATION: FT. SKEW ANGLE:

ESTIMATED PRLIMINARY TOTAL SCOUR AT PIER EL.
(500 OR OT YR. FREQ.)

SCOUR CONFIRMATION RECOMMENDATION

DATE:

TOTAL SCOUR AT PIER EL. (500 OR OT YR. FREQ.)
SCOUR CODE: OBTAIN FROM HYDRAULIC ENGINEER

BRIDGE SURVEY SHEETS MADE FROM 2014 MFRA SURVEYS

1ST BENCH MARK (NAVD 88)
BENCHMARK ID PT. 82
ELEVATION = 832.55
N = 170339.14, E = 525851.45
DESCRIPTION = MAG NAIL IN WALK

2ND BENCH MARK (NAVD 88)
BENCHMARK ID PT. 83
ELEVATION = 828.36
N = 170329.54, E = 525453.40
DESCRIPTION = SPIKE IN BACK OF CURB

BRIDGE SURVEY 1

PROPOSED BRIDGE
LOCATED 0.3 MILES EAST OF JCT. T.H. 55
(OLSON MEMORIAL HIGHWAY) AND INTERSTATE 94.

SOUTHWEST LRT CONNECTION TO INTERCHANGE
BRIDGE NO. R0646

SEC 22 T 29N R 24W

CITY OF MINNEAPOLIS HENNEPIN COUNTY

BRIDGE NO. 27C18

NO.	DATE	BY	CHECK	DESIGN	REVISION / SUBMITTAL

DESIGNED BY: KR CHECKED BY: KJK
DRAWN BY: MSK CHECKED BY: KJK

AECOM Kimley»Horn

90% SUBMISSION - 01/22/16

METROPOLITAN COUNCIL

SOUTHWEST Green Line LRT Extension

CIVIL - VOLUME 4G
5TH AVENUE AND 7TH STREET
BRIDGE 27C18
BRIDGE SURVEY 1

DISCIPLINE: STRUCTURES

SHEET NAME: CBR27C18-BRG-SUR-001

SHEET 133 OF 148

Jan, 18 2016 03:45 pm V:\3400_ADC\CAD\SEGMENT E4\PLAN SHEETS\STRUCTURES\27C18\CBR27C18-BRG-SUR-001.dwg By: Victor.Madrid

CONTRACTED PROFILE

SCALE HOR: 0 50'

SCALE VER: 0 15'

PROFILE GRADE
FUTURE TRACK 1 (BLRT)

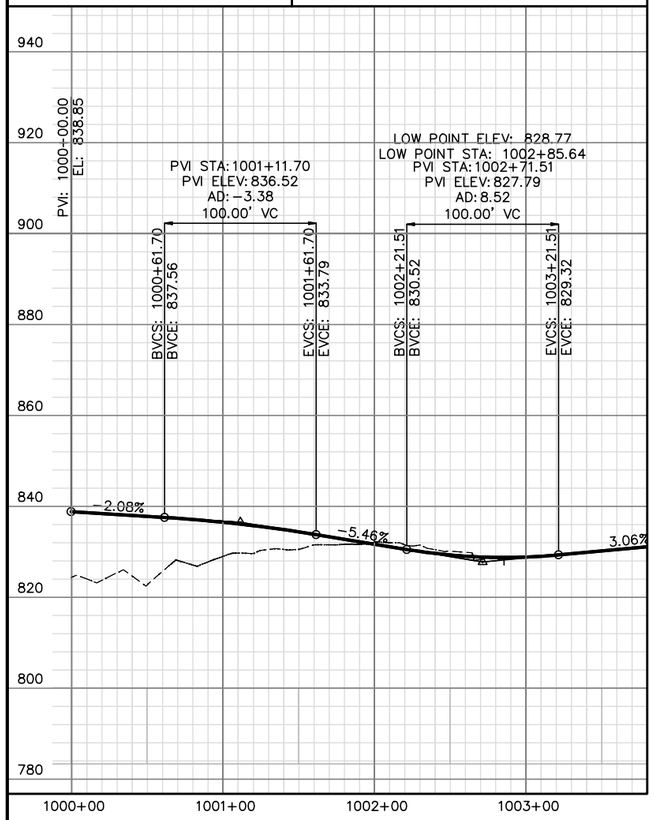

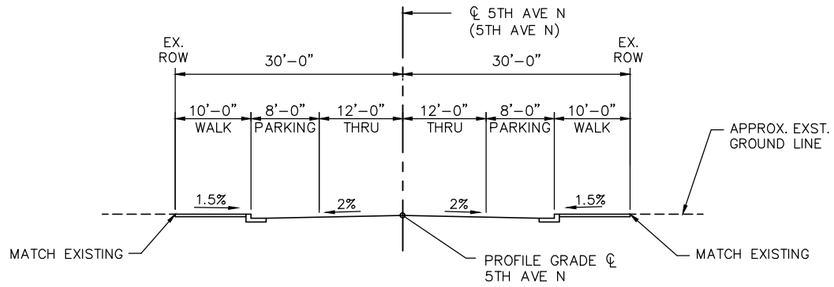

TYPICAL ROADWAY SECTION 5TH AVE N

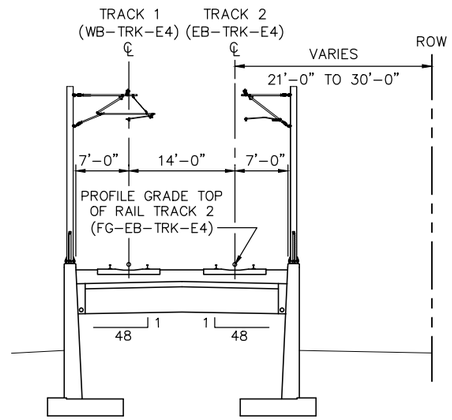

TYPICAL APPROACH SECTION

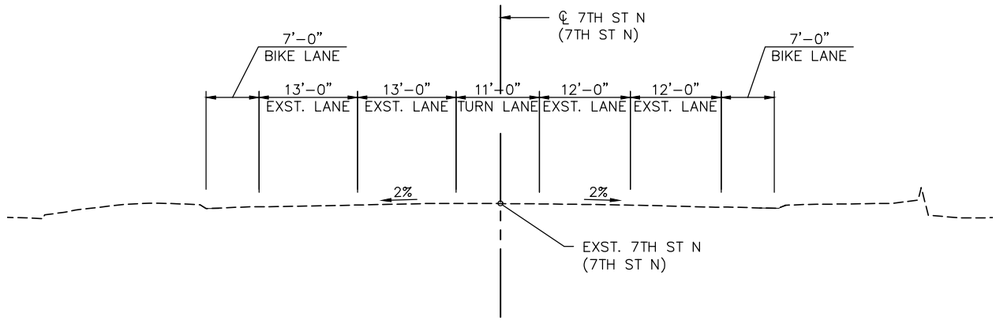

TYPICAL EXISTING ROADWAY SECTION 7TH ST N

NO.	DATE	BY	CHECK	DESIGN	REVISION / SUBMITTAL

DESIGNED BY: KR | CHECKED BY: KJK

DRAWN BY: MSK | CHECKED BY: KJK

AECOM Kimley»Horn

90% SUBMISSION - 01/22/16

METROPOLITAN COUNCIL

SOUTHWEST Green Line LRT Extension

CIVIL - VOLUME 4G
5TH AVENUE AND 7TH STREET
BRIDGE 27C18
BRIDGE SURVEY 2

DISCIPLINE: STRUCTURES

SHEET NAME: CBR27C18-BRG-SUR-002

SHEET 134 OF 148

Jan, 18 2016 03:51 pm V:\3400_ADC\CAD\SEGMENT E4\PLAN SHEETS\STRUCTURES\27C18\CBR27C18-BRG-SUR-002.dwg By: Victor.Madrid

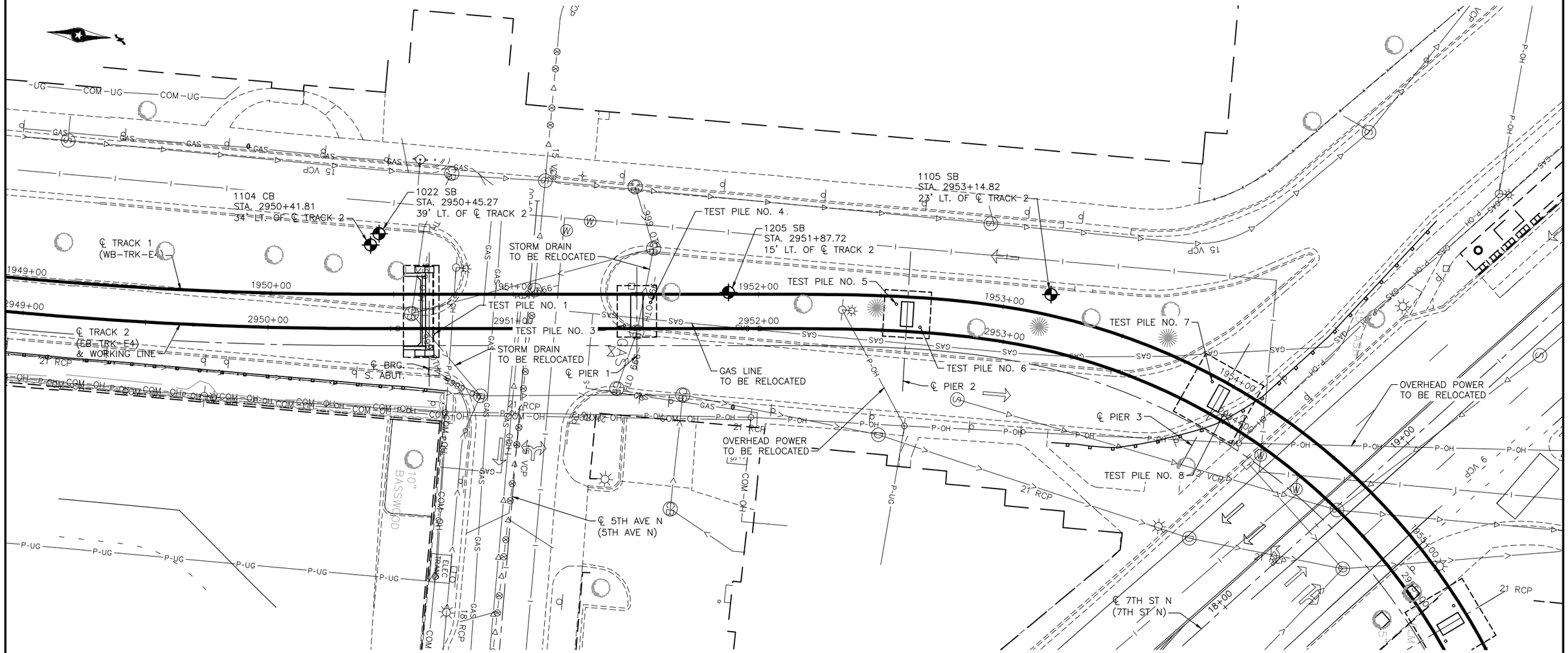

NOTES:

THE SUBSURFACE UTILITY INFORMATION IN THIS PLAN IS UTILITY QUALITY LEVEL D. THIS UTILITY QUALITY LEVEL WAS DETERMINED ACCORDING TO THE GUIDELINES OF CI/ASCE 38-02, ENTITLED "STANDARD GUIDELINES FOR THE COLLECTION AND DEPICTION OF EXISTING SUBSURFACE UTILITY DATA."

EXISTING UTILITIES WILL BE RELOCATED BY OTHERS.

NO.	DATE	BY	CHECK	DESIGN	REVISION / SUBMITTAL

DESIGNED BY: KR | CHECKED BY: KJK
DRAWN BY: MSK | CHECKED BY: KJK

AECOM Kimley»Horn

90% SUBMISSION - 01/22/16

METROPOLITAN COUNCIL

SOUTHWEST Green Line LRT Extension

CIVIL - VOLUME 4G
5TH AVENUE AND 7TH STREET
BRIDGE 27C18
BRIDGE SURVEY PLAN 1

DISCIPLINE: STRUCTURES
SHEET NAME: CBR27C18-BRG-BOR-001

SHEET 135 OF 148

Jan, 18 2016 03:53 pm V:\3400_ADC\CAD\SEGMENT E4\PLAN SHEETS\STRUCTURES\27C18\CBR27C18-BRG-BOR-001.dwg By: Victor.Madrid

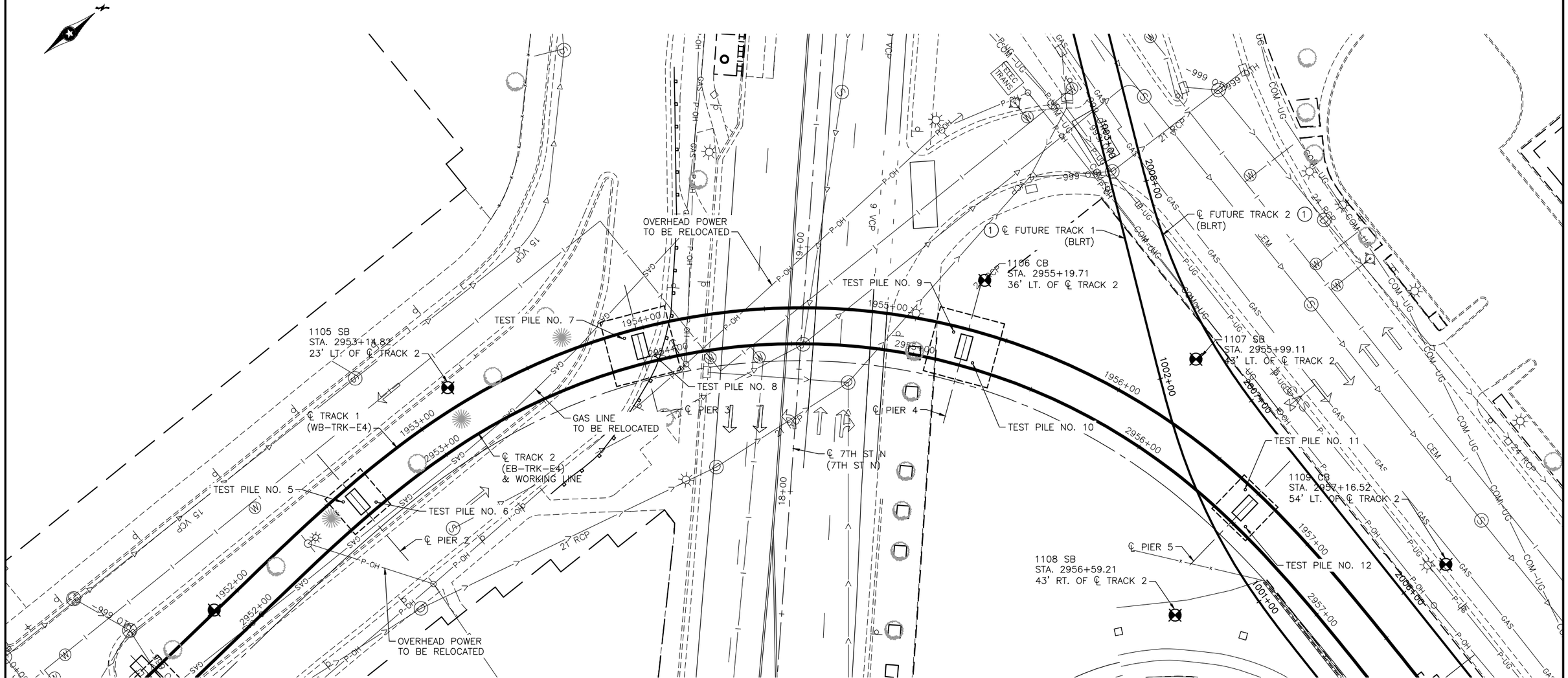

NOTES:

THE SUBSURFACE UTILITY INFORMATION IN THIS PLAN IS UTILITY QUALITY LEVEL D. THIS UTILITY QUALITY LEVEL WAS DETERMINED ACCORDING TO THE GUIDELINES OF CI/ASCE 38–02, ENTITLED "STANDARD GUIDELINES FOR THE COLLECTION AND DEPICTION OF EXISTING SUBSURFACE UTILITY DATA."

EXISTING UTILITIES WILL BE RELOCATED BY OTHERS.

(1) BLRT ALIGNMENT SHOWN IS BASED ON PRELIMINARY INFORMATION AND WILL BE UPDATED AS ADDITIONAL INFORMATION IS AVAILABLE.

NO.	DATE	BY	CHECK	DESIGN	REVISION / SUBMITTAL

DESIGNED BY: KR | CHECKED BY: KJK
DRAWN BY: MSK | CHECKED BY: KJK

AECOM Kimley»Horn

90% SUBMISSION - 01/22/16

METROPOLITAN COUNCIL

SOUTHWEST Green Line LRT Extension

CIVIL - VOLUME 4G
5TH AVENUE AND 7TH STREET
BRIDGE 27C18
BRIDGE SURVEY PLAN 2

DISCIPLINE: STRUCTURES

SHEET NAME: CBR27C18-BRG-BOR-002

SHEET 136 OF 148

Jan. 18 2016 03:55 pm V:\3400_ADC\CAD\SEGMENT E4\PLAN SHEETS\STRUCTURES\27C18\CBR27C18-BRG-BOR-002.dwg By: Victor.Madrid

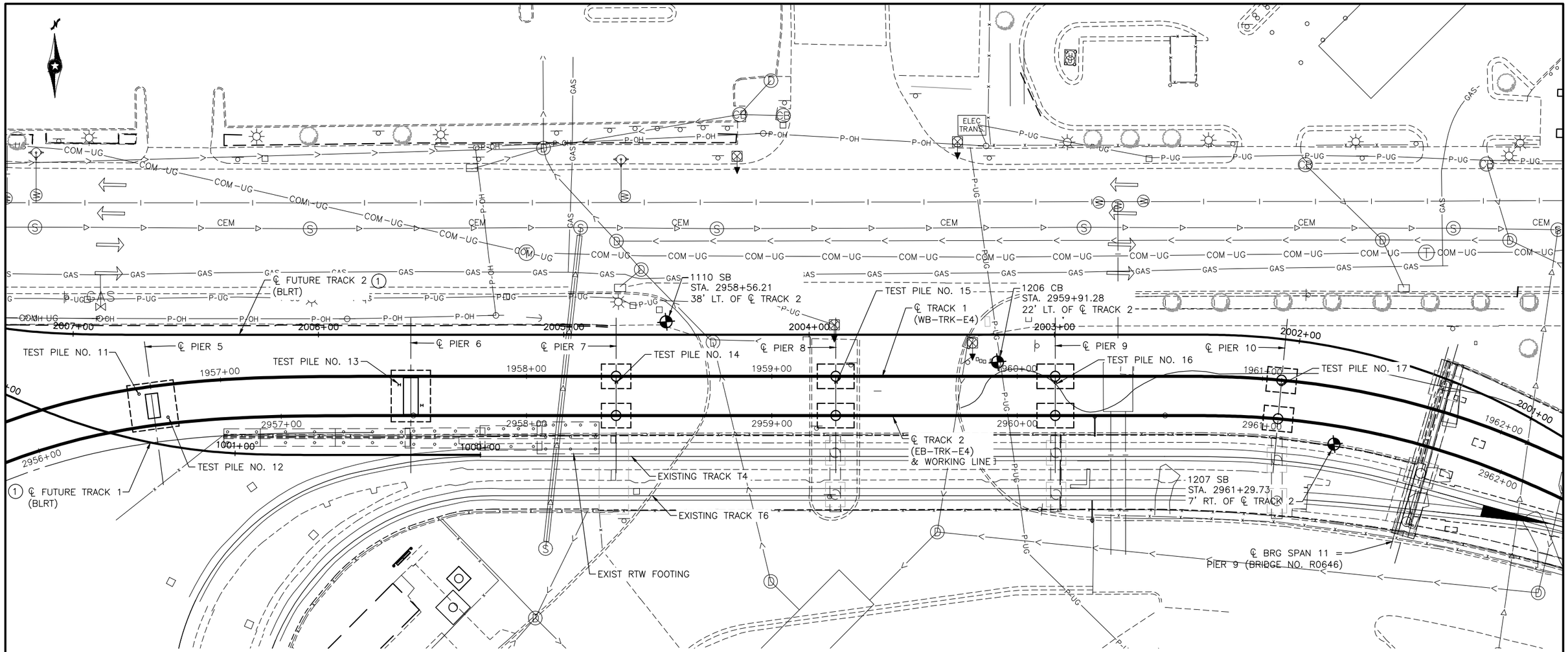

NOTES:

THE SUBSURFACE UTILITY INFORMATION IN THIS PLAN IS UTILITY QUALITY LEVEL D. THIS UTILITY QUALITY LEVEL WAS DETERMINED ACCORDING TO THE GUIDELINES OF CI/ASCE 38-02, ENTITLED "STANDARD GUIDELINES FOR THE COLLECTION AND DEPICTION OF EXISTING SUBSURFACE UTILITY DATA."

EXISTING UTILITIES WILL BE RELOCATED BY OTHERS.

(1) BLRT ALIGNMENT SHOWN IS BASED ON PRELIMINARY INFORMATION AND WILL BE UPDATED AS ADDITIONAL INFORMATION IS AVAILABLE.

NO.	DATE	BY	CHECK	DESIGN	REVISION / SUBMITTAL

DESIGNED BY: KR | CHECKED BY: KJK
DRAWN BY: MSK | CHECKED BY: KJK

AECOM Kimley»Horn

90% SUBMISSION - 01/22/16

METROPOLITAN COUNCIL

SOUTHWEST Green Line LRT Extension

CIVIL - VOLUME 4G
5TH AVENUE AND 7TH STREET
BRIDGE 27C18
BRIDGE SURVEY PLAN 3

DISCIPLINE: STRUCTURES
SHEET NAME: CBR27C18-BRG-BOR-003

SHEET 137 OF 148

Jan. 18 2016 03:57 pm v:\3400_ADC\CAD\SEGMENT E4\PLAN SHEETS\STRUCTURES\27C18\CBR27C18-BRG-BOR-003.dwg By: Victor.Madrid

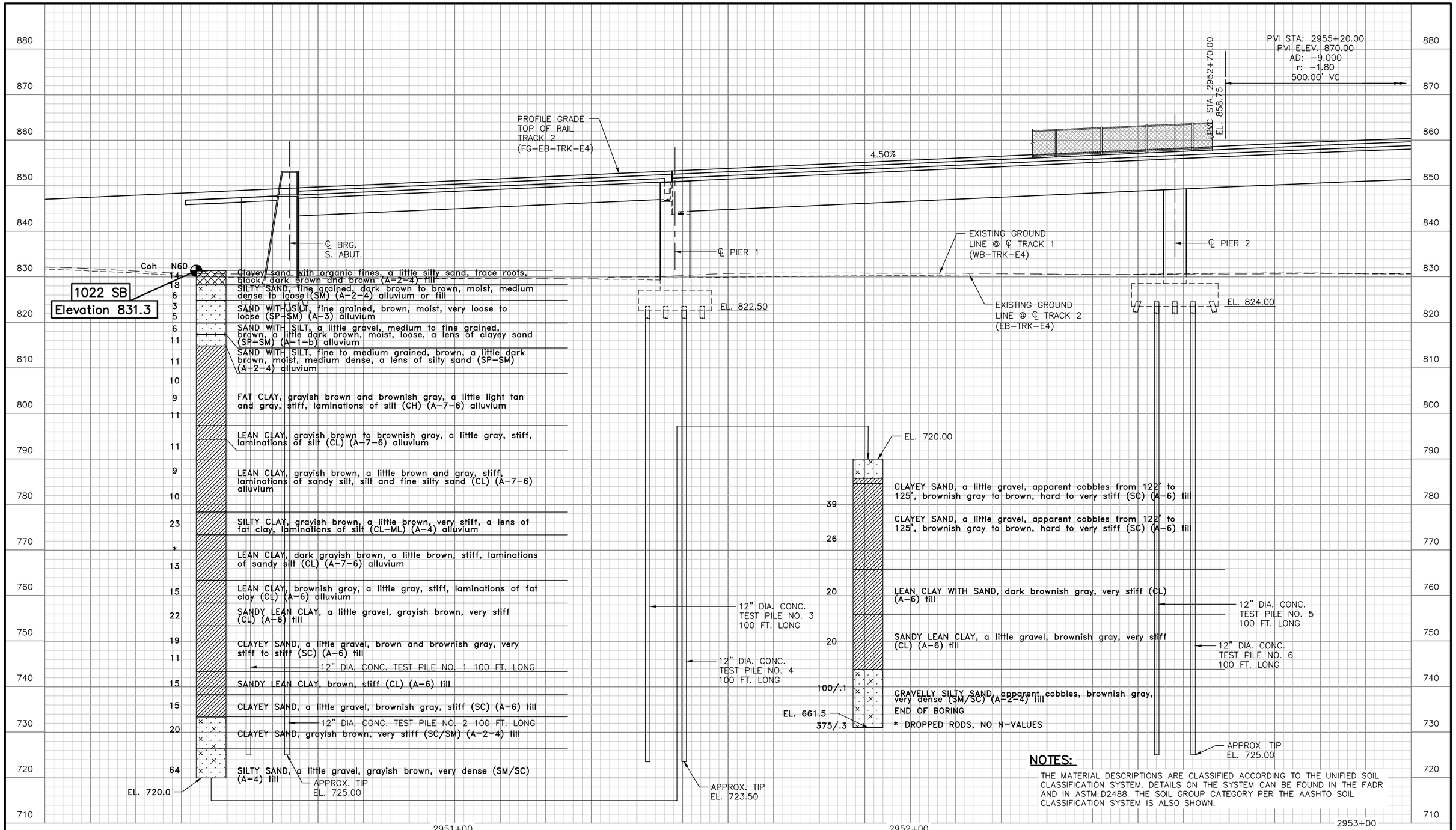

NOTES:

THE MATERIAL DESCRIPTIONS ARE CLASSIFIED ACCORDING TO THE UNIFIED SOIL CLASSIFICATION SYSTEM. DETAILS ON THE SYSTEM CAN BE FOUND IN THE FADR AND IN ASTM:D2488. THE SOIL GROUP CATEGORY PER THE AASHTO SOIL CLASSIFICATION SYSTEM IS ALSO SHOWN.

NO.	DATE	BY	CHECK	DESIGN	REVISION / SUBMITTAL

DESIGNED BY: KR | CHECKED BY: KJK
DRAWN BY: MSK | CHECKED BY: KJK

AECOM Kimley»Horn

90% SUBMISSION - 01/22/16

METROPOLITAN COUNCIL

SOUTHWEST Green Line LRT Extension

CIVIL - VOLUME 4G
5TH AVENUE AND 7TH STREET BRIDGE 27C18
BRIDGE SURVEY PROFILE 1

DISCIPLINE: STRUCTURES

SHEET NAME: CBR27C18-BRG-BOR-004

SHEET 138 OF 148

Jan. 18 2016 03:58 pm V:\3400_ADC\CAD\SEGMENT E4\PLAN SHEETS\STRUCTURES\27C18\CBR27C18-BRG-BOR-004.dwg By: Victor.Madrid

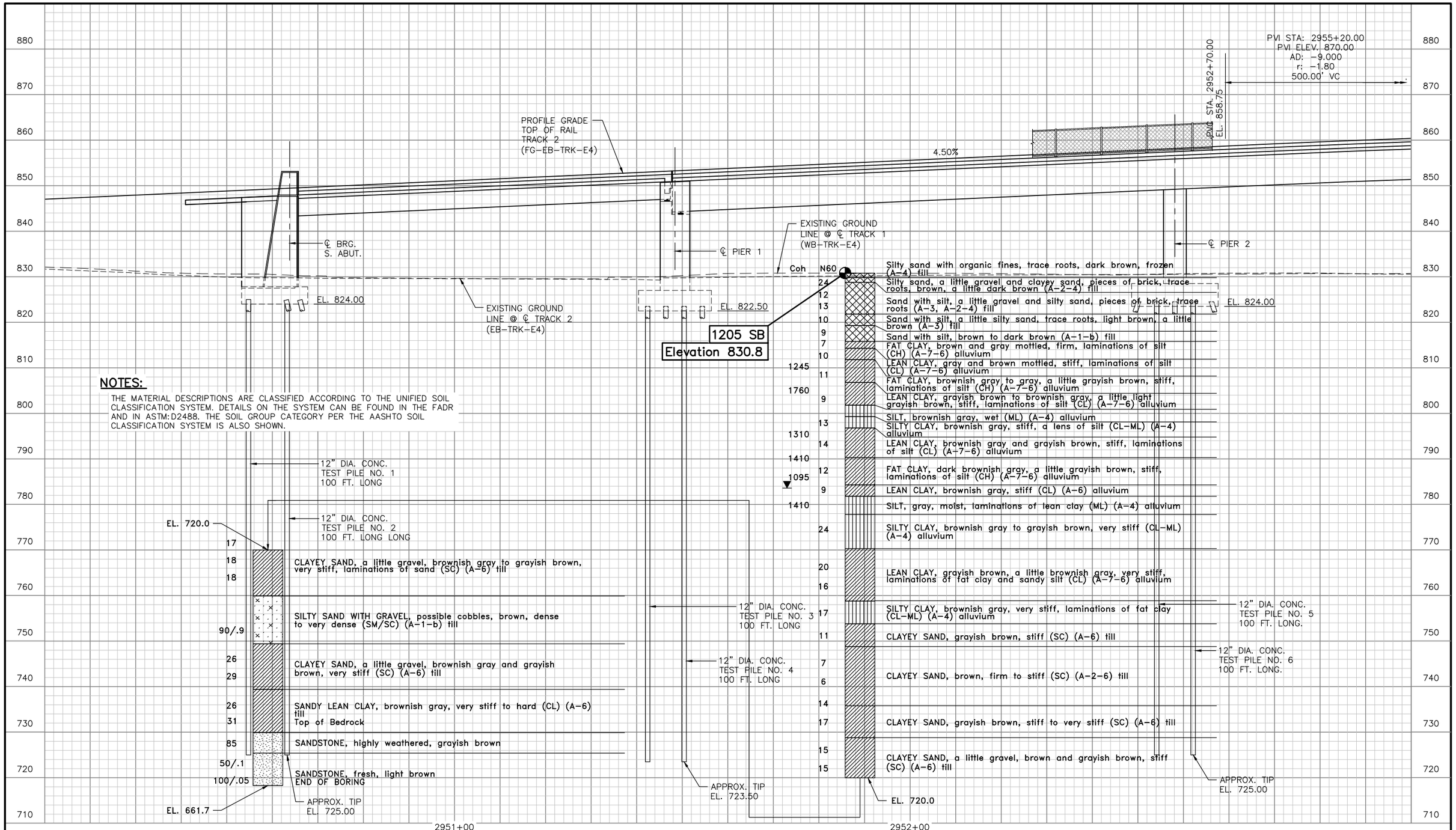

NOTES:

THE MATERIAL DESCRIPTIONS ARE CLASSIFIED ACCORDING TO THE UNIFIED SOIL CLASSIFICATION SYSTEM. DETAILS ON THE SYSTEM CAN BE FOUND IN THE FADR AND IN ASTM:D2488. THE SOIL GROUP CATEGORY PER THE AASHTO SOIL CLASSIFICATION SYSTEM IS ALSO SHOWN.

NO.	DATE	BY	CHECK	DESIGN	REVISION / SUBMITTAL

DESIGNED BY: KR CHECKED BY: KJK
DRAWN BY: MSK CHECKED BY: KJK

AECOM Kimley»Horn

90% SUBMISSION - 01/22/16

METROPOLITAN COUNCIL

SOUTHWEST Green Line LRT Extension

CIVIL - VOLUME 4G
5TH AVENUE AND 7TH STREET
BRIDGE 27C18
BRIDGE SURVEY PROFILE 2

DISCIPLINE: STRUCTURES

SHEET NAME: CBR27C18-BRG-BOR-005

SHEET 139 OF 148

Jan, 18 2016 03:58 pm V:\3400_ADC\CAD\SEGMENT E4\PLAN SHEETS\STRUCTURES\27C18\CBR27C18-BRG-BOR-004.dwg By: Victor.Madrid

PVI STA: 2955+20.00
PVI ELEV. 870.00
AD: −9.000
r: −1.80
500.00' VC

PROFILE GRADE
TOP OF RAIL
TRACK 2
(FG-EB-TRK-E4)

PVC STA. 2952+70.00
EL. 858.75
4.50%

℄ PIER 2
℄ PIER 3
℄ PIER 4

EXISTING GROUND LINE @ ℄ TRACK 1 (WB-TRK-E4)
EXISTING GROUND LINE @ ℄ TRACK 2 (EB-TRK-E4)

EL. 824.00
EL. 823.00
EL. 823.00

1105 SB
Elevation 831.0

Coh	N60	
	6	Silty sand, a little gravel and clayey sand, trace roots, grayish brown and brown, till
	13	
	8	
	8	Sand, a little gravel, sandy lean clay and silty sand, light brown and brown, a little brownish gray, till
1135	11	
	10	
	8	FAT CLAY, trace roots, brown and light brown, a little gray, firm, laminations of silt and sandy lean clay (CH) alluvium
	10	
	9	
	7	
	8	
	7	FAT CLAY, brownish gray, a little brown and light grayish brown, stiff to firm, laminations of sandy lean clay and silt (CH) alluvium
	7	
	16	
	20	
	11	
	9	
	11	FAT CLAY, brownish gray, stiff to firm, a lens of wet silt at 26' (CH) alluvium
	16	
	14	
	15	LEAN CLAY, brownish gray, a little gray, firm, laminations of silt and fat clay (CL) alluvium
	14	
	13	
	21	SILTY CLAY, brownish gray, firm (CL-ML) alluvium
	20	
	22	
	23	SILTY CLAY, brownish gray, a little dark brownish gray, very stiff, laminations of fat clay (CL-ML) alluvium
	21	
	18	
	19	SILTY CLAY, brownish gray, very stiff to stiff, a lens of fat clay at 49' (CL-ML) alluvium
	36	
	50	SILTY CLAY, brownish gray, a little dark brownish gray, stiff, laminations of fat clay (CL-ML) alluvium
	25	
	16	FAT CLAY, dark brownish gray, a little brownish gray, very stiff to stiff, laminations of silty clay (CH) alluvium
	20	
	29	
	35	LEAN CLAY, brownish gray, a little dark brownish gray, stiff to very stiff, laminations of silt and fat clay (CL) alluvium
	23	
	21	
	50/0.2 *	SILTY CLAY, brownish gray, very stiff, a lens of fat clay below 74', laminations of wet silt (CL-ML) alluvium
		CLAYEY SAND, a little gravel, grayish brown, very stiff (SC) till
		SANDY LEAN CLAY, a little gravel, brownish gray, very stiff, laminations of fat clay (CL) till
		FAT CLAY, grayish brown, very stiff (CH) alluvium

EL. 730.0

12" DIA. CONC. TEST PILE NO. 5 100 FT. LONG
12" DIA. CONC. TEST PILE NO. 6 100 FT. LONG
12" DIA. CONC. TEST PILE NO. 7 100 FT. LONG
12" DIA. CONC. TEST PILE NO. 8 100 FT. LONG
12" DIA. CONC. TEST PILE NO. 9 100 FT. LONG
12" DIA. CONC. TEST PILE NO. 10 100 FT. LONG.

APPROX. TIP EL. 725.00
APPROX. TIP EL. 724.00
APPROX. TIP EL. 724.00

EL. 730.0

	CLAYEY SAND WITH GRAVEL, grayish brown, hard (SC/SM) till
	CLAYEY SAND, grayish brown, very stiff (SC) till
	FAT CLAY, grayish brown, very stiff (CH) alluvium
	CLAYEY SAND WITH GRAVEL, brown, very stiff (SC) till
	FAT CLAY, grayish brown, hard to very stiff (CH) alluvium
	Top of Bedrock
	SANDSTONE, fresh to weathered, light brownish gray
	END OF BORING
	* 43/0.5 + 75/0.5

EL. 681.0

NOTES:

THE MATERIAL DESCRIPTIONS ARE CLASSIFIED ACCORDING TO THE UNIFIED SOIL CLASSIFICATION SYSTEM. DETAILS ON THE SYSTEM CAN BE FOUND IN THE FADR AND IN ASTM:D2488. THE SOIL GROUP CATEGORY PER THE AASHTO SOIL CLASSIFICATION SYSTEM IS ALSO SHOWN.

2953+00 2954+00 2955+00

NO.	DATE	BY	CHECK	DESIGN	REVISION / SUBMITTAL

DESIGNED BY: KR CHECKED BY: KJK
DRAWN BY: MSK CHECKED BY: KJK

AECOM Kimley»Horn

90% SUBMISSION - 01/22/16

METROPOLITAN COUNCIL
SOUTHWEST Green Line LRT Extension

CIVIL - VOLUME 4G
5TH AVENUE AND 7TH STREET BRIDGE 27C18
BRIDGE SURVEY PROFILE 3

DISCIPLINE: STRUCTURES
SHEET NAME: CBR27C18-BRG-BOR-006

SHEET 140 OF 148

Jan, 18 2016 03:58 pm V:\3400_ADC\CAD\SEGMENT E4\PLAN SHEETS\STRUCTURES\27C18\CBR27C18-BRG-BOR-004.dwg By: Victor.Madrid

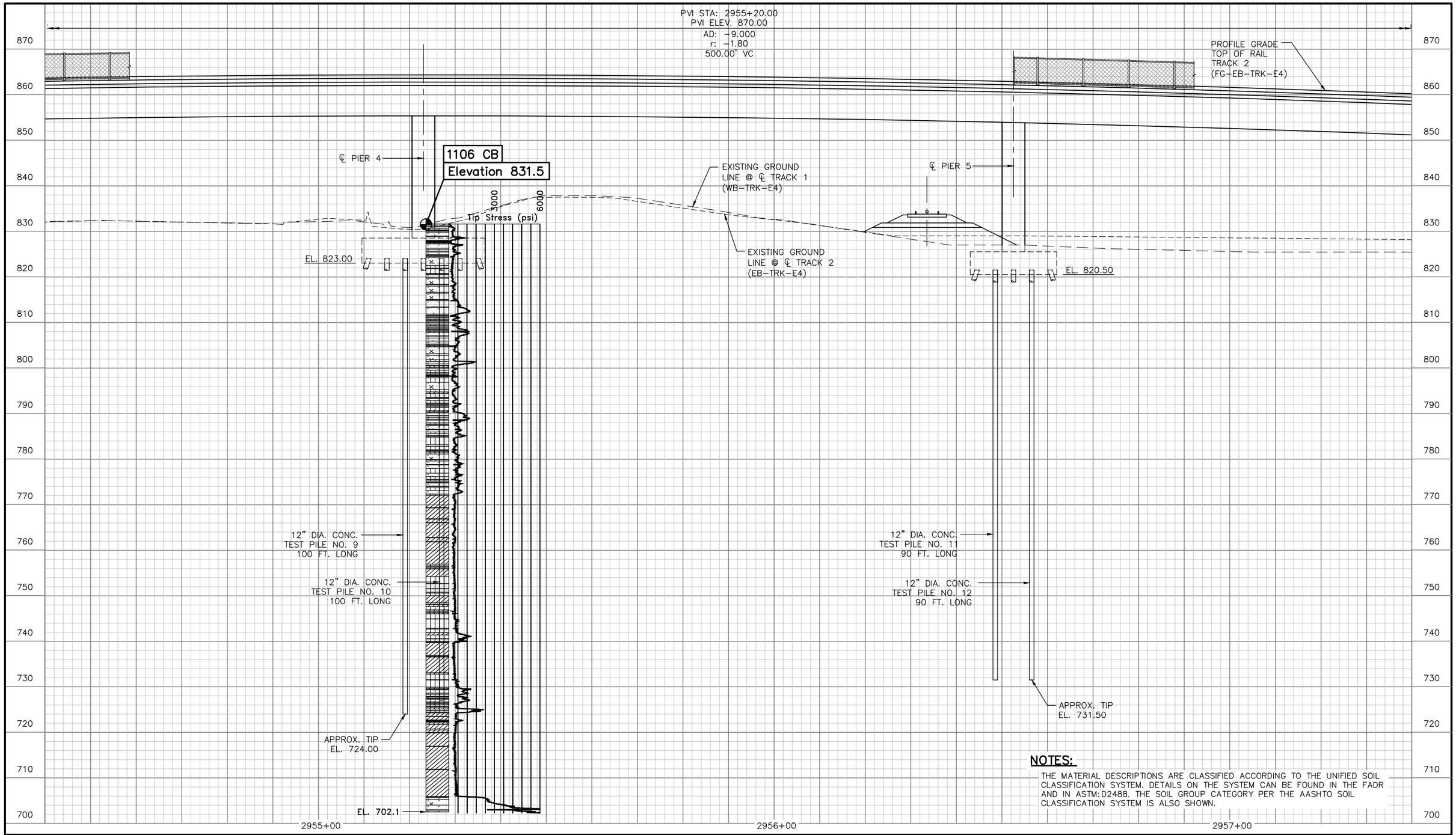

NOTES:

THE MATERIAL DESCRIPTIONS ARE CLASSIFIED ACCORDING TO THE UNIFIED SOIL CLASSIFICATION SYSTEM. DETAILS ON THE SYSTEM CAN BE FOUND IN THE FADR AND IN ASTM:D2488. THE SOIL GROUP CATEGORY PER THE AASHTO SOIL CLASSIFICATION SYSTEM IS ALSO SHOWN.

NO.	DATE	BY	CHECK	DESIGN	REVISION / SUBMITTAL

DESIGNED BY: KR | CHECKED BY: KJK
DRAWN BY: MSK | CHECKED BY: KJK

AECOM Kimley»Horn

90% SUBMISSION - 01/22/16

METROPOLITAN COUNCIL

SOUTHWEST Green Line LRT Extension

CIVIL - VOLUME 4G
5TH AVENUE AND 7TH STREET
BRIDGE 27C18
BRIDGE SURVEY PROFILE 4

DISCIPLINE: STRUCTURES

SHEET NAME: CBR27C18-BRG-BOR-007

SHEET 141 OF 148

Jan, 18 2016 03:58 pm V:\3400_ADC\CAD\SEGMENT E4\PLAN SHEETS\STRUCTURES\27C18\CBR27C18-BRG-BOR-004.dwg By: Victor.Madrid

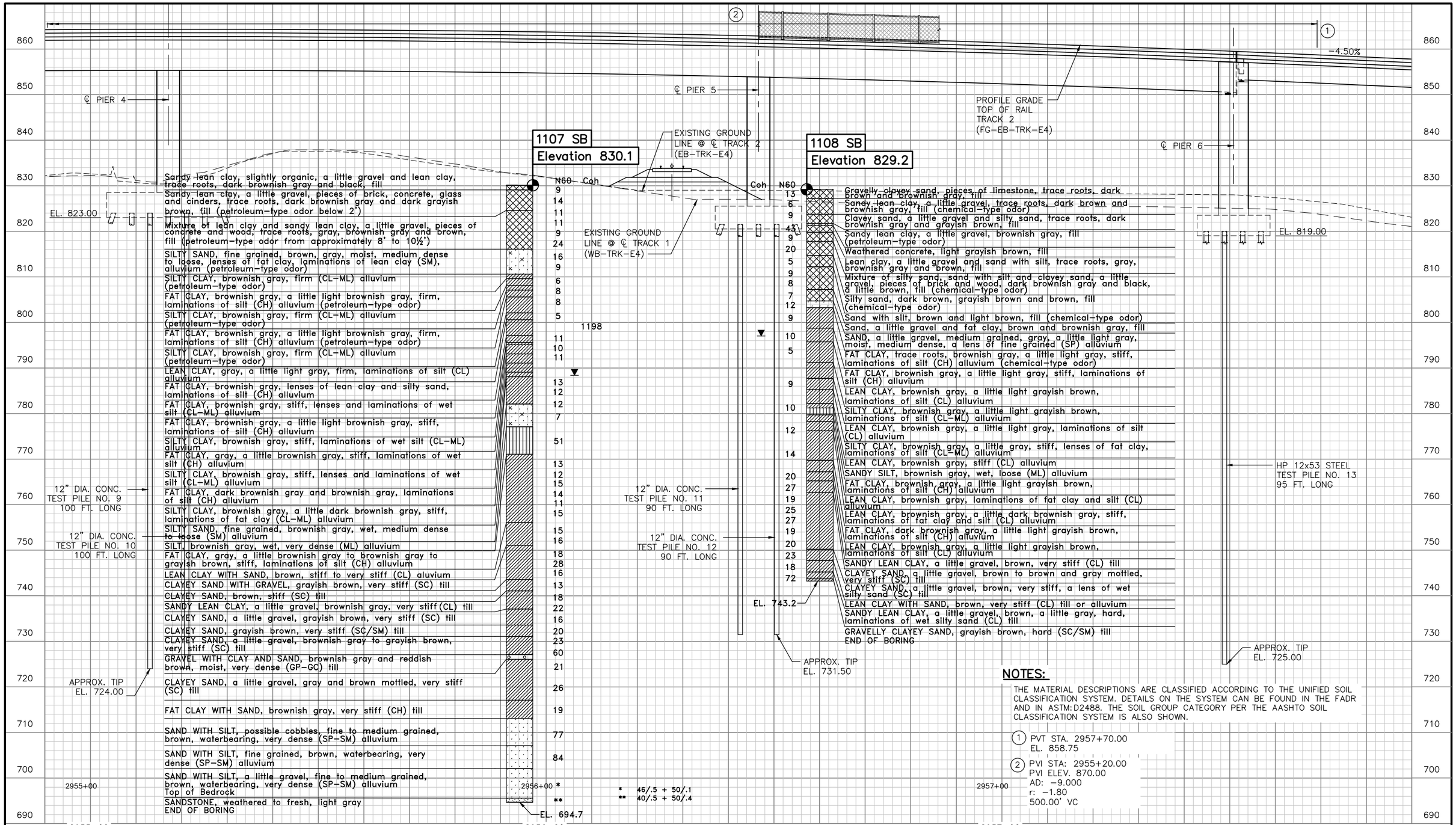

NO.	DATE	BY	CHECK	DESIGN	REVISION / SUBMITTAL

DESIGNED BY: KR | CHECKED BY: KJK
DRAWN BY: MSK | CHECKED BY: KJK

AECOM Kimley»Horn

90% SUBMISSION - 01/22/16

METROPOLITAN COUNCIL

SOUTHWEST Green Line LRT Extension

CIVIL - VOLUME 4G
5TH AVENUE AND 7TH STREET BRIDGE 27C18
BRIDGE SURVEY PROFILE 5

DISCIPLINE: STRUCTURES

SHEET NAME: CBR27C18-BRG-BOR-008

SHEET 142 OF 148

Jan. 18 2016 03:58 pm v:\3400_ADC\CAD\SEGMENT E4\PLAN SHEETS\STRUCTURES\27C18\CBR27C18-BRG-BOR-004.dwg By: Victor.Madrid

PVI STA: 2955+20.00
PVI ELEV. 870.00
AD: −9.000
r: −1.80
500.00' VC

PVT STA: 2957+70.00
EL. 858.75

−4.50%

PROFILE GRADE
TOP OF RAIL
TRACK 2
(FG−EB−TRK−E4)

℄ PIER 6

℄ PIER 7

℄ PIER 8

EXISTING GROUND
LINE @ ℄ TRACK 2
(EB−TRK−E4)

EXISTING GROUND
LINE @ ℄ TRACK 1
(WB−TRK−E4)

EL. 819.00

EL. 812.75

EL. 809.50

1109 CB
Elevation 820.4

Tip Stress (psi)
3000
6000

EL. 751.8

HP 12x53 STEEL
TEST PILE NO. 13
95 FT. LONG

EL. 730.0

27	CLAYEY SAND, a little gravel, brownish gray, very stiff (SC) till
18	No sample recovery − driller note: possible cobbles/boulders, possible colluvium
100/.4	REDEPOSITED SANDSTONE, brownish gray, [Textural classification: Sand, a little gravel, fine grained, waterbearing, very dense (SP)] colluvium or alluvium
100/.5	Top of Bedrock SANDSTONE, fresh, a lens of shaly sandstone, gray, a little light brown

EL. 709.0

END OF BORING

APPROX. TIP
EL. 725.00

1110 SB
Elevation 817.9

Coh

N60	
18 19	Mixture of clayey sand and lean clay, a little gravel, dark brownish gray and gray, fill
8 5	Sand with silt, a little gravel, pieces of brick and wood, grayish brown and black, fill (petroleum−type odor below about 7')
3	
5	Silty sand, black, a little gray, fill
7 9	Sand with silt, a little silty sand, gray, a little brownish gray, fill
▼ 9	Sand, brown and gray, fill
2	Sand with silt, trace roots, dark gray, fill
6	Sand, a little gravel, a nail, dark gray and gray, fill
7	SAND, a little gravel, medium to fine grained, dark gray, waterbearing, loose (SP) alluvium or fill
11	SAND, a little gravel, medium to fine grained, gray, waterbearing, medium dense, lenses of fine grained (SP) alluvium
15	LEAN CLAY, brownish gray, stiff, laminations of fat clay (CL) alluvium
16	SILT, brownish gray, wet, medium dense (ML) alluvium
17	FAT CLAY, brownish gray, a little gray, very stiff, laminations of silt (CH) alluvium
15	LEAN CLAY, brownish gray, stiff (CL) alluvium
13	FAT CLAY, brownish gray, a little gray, stiff, laminations of lean clay (CH) alluvium
15	
26	CLAYEY SAND, a little gravel, brown, very stiff, laminations of waterbearing sand below 77' (SC) till
22 23	

EL. 730.0

HP 12x53 STEEL
TEST PILE NO. 14
110 FT. LONG

APPROX. TIP
EL. 703.75

HP 12x53 STEEL
TEST PILE NO. 15
130 FT. LONG

APPROX. TIP
EL. 680.50

NOTES:

THE MATERIAL DESCRIPTIONS ARE CLASSIFIED ACCORDING TO THE UNIFIED SOIL CLASSIFICATION SYSTEM. DETAILS ON THE SYSTEM CAN BE FOUND IN THE FADR AND IN ASTM:D2488. THE SOIL GROUP CATEGORY PER THE AASHTO SOIL CLASSIFICATION SYSTEM IS ALSO SHOWN.

880 870 860 850 840 830 820 810 800 790 780 770 760 750 740 730 720 710

2957+00 2958+00 2959+00

Jan, 18 2016 03:59 pm V:\3400_ADC\CAD\SEGMENT E4\PLAN SHEETS\STRUCTURES\27C18\CBR27C18-BRG-BOR-004.dwg By: Victor.Madrid

NO.	DATE	BY	CHECK	DESIGN	REVISION / SUBMITTAL

DESIGNED BY: KR CHECKED BY: KJK
DRAWN BY: MSK CHECKED BY: KJK

AECOM Kimley»Horn

90% SUBMISSION - 01/22/16

METROPOLITAN COUNCIL

SOUTHWEST Green Line LRT Extension

CIVIL - VOLUME 4G
5TH AVENUE AND 7TH STREET
BRIDGE 27C18
BRIDGE SURVEY PROFILE 6

DISCIPLINE: STRUCTURES
SHEET NAME: CBR27C18-BRG-BOR-009

SHEET 143 OF 148

PVC STA. 2959+63.57
EL. 850.04

PVI STA: 2960+63.57
PVI ELEV. 845.54
AD: 5.250
r: 2.63
200.00' VC

PVT STA. 2961+63.57
EL. 846.29

PROFILE GRADE
TOP OF RAIL
TRACK 2
(FG-EB-TRK-E4)

0.75%

1206 CB
Elevation 817.5

℄ PIER 9

℄ PIER 10

℄ EXISTING PIER 9
(BRIDGE NO. R0646)

1207 SB
Elevation 817.9

EXISTING GROUND
LINE @ ℄ TRACK 2
(EB-TRK-E4)

3000
6000
Tip Stress (psi)

EL. 809.50

EL. 810.50

EXISTING GROUND
LINE @ ℄ TRACK 1
(WB-TRK-E4)

HP 12x53 STEEL
TEST PILE NO. 16
140 FT. LONG

HP 12x53 STEEL
TEST PILE NO. 17
140 FT. LONG

Coh	N60	
	17	Mixture of clayey sand, sandy lean clay and silty sand, with gravel, pieces of brick, trace roots, dark brown and brown, fill
	25	
	14	
	23	Silty sand, pieces of concrete and wood, brownish gray and black, fill (petroleum-type odor)
	9	
	7	Silty sand, a little gravel and clayey sand, pieces of bituminous and wood, cinders, clinkers and ash, dark brown and gray, fill (petroleum-type odor)
	4	
	4	
	6	Silty sand, a little gravel and organic silt, pieces of bituminous, trace roots, gray and dark gray, fill (petroleum-type odor)
	8	ORGANIC CLAY, trace roots, grayish brown, firm (OL/OH) swamp deposit
	5	
	4	ORGANIC CLAY, grayish brown, soft (OL/OH) swamp deposit
	4	
	4	
	3	ORGANIC CLAY, trace roots, brownish gray, soft (OL/OH) swamp deposit
	3	ORGANIC CLAY, dark gray, a little gray, soft (OL/OH) swamp deposit
890		LEAN CLAY, trace roots, gray, a little light gray, laminations of silt (CL) alluvium (petroleum-type odor)
	7	SAND WITH SILT, fine grained, gray, wet (SP-SM) alluvium (petroleum-type odor)
	22	SAND, a little gravel, fine to medium grained, gray, waterbearing, loose (SP) alluvium (petroleum-type odor)
	36	SAND, fine grained, gray, waterbearing, medium dense to dense (SP) alluvium
	20	SAND WITH SILT, a little gravel, fine to medium grained, gray, a little black, waterbearing, medium dense (SP-SM) alluvium (petroleum-type odor)
	31	SAND, a little gravel, medium grained, gray, waterbearing, dense (SP) alluvium
	19	SILTY CLAY, brownish gray, stiff (CL-ML) alluvium (petroleum-type odor)
	19	FAT CLAY, brownish gray, very stiff, laminations of wet silt (CH) alluvium (petroleum-type odor)
	23	SILTY CLAY, brownish gray, very stiff (CL-ML) alluvium
	14	LEAN CLAY, a little dark gray, very stiff, laminations of fat clay (CL) alluvium
	20	FAT CLAY, gray, a little brownish gray, stiff, laminations of wet silt (CH) alluvium
	13	LEAN CLAY, brownish gray, very stiff (CL) alluvium
	24	FAT CLAY, gray, a little brownish gray mottled, stiff (CH) alluvium
	22	SILTY CLAY, brownish gray, very stiff, laminations of wet silt (CL-ML) alluvium
	20	SILTY CLAY, brownish gray, a little gray, very stiff, laminations of fat clay (CL-ML) alluvium
	16	SANDY LEAN CLAY, a little gravel, brown and gray mottled to brown, very stiff (CL) till
	28	
	57	CLAYEY SAND, a little gravel, brown, hard, laminations of waterbearing sand (SC) till
	41	

EL. 700.00
23 SANDY LEAN CLAY, a little gravel, brown and gray mottled, very stiff (CL) till
23 CLAYEY SAND, a little gravel, brown and gray mottled, very stiff, (SC) till
24
59 SANDSTONE SAND [Textural Classification: Sand with silt a little gravel, fine grained, brown, very dense (SP-SM) colluvium or residual soil
100/0.1 Top of Bedrock
100/0.1 Apparent Fresh SANDSTONE, based on drilling action (no samples retrieved)
END OF BORING
EL. 673.3

EL. 697.8
APPROX. TIP
EL. 670.50

EL. 700.00
APPROX. TIP
EL. 671.50

2960+00
2961+00
2962+00

NOTES:

THE MATERIAL DESCRIPTIONS ARE CLASSIFIED ACCORDING TO THE UNIFIED SOIL CLASSIFICATION SYSTEM. DETAILS ON THE SYSTEM CAN BE FOUND IN THE FADR AND IN ASTM:D2488. THE SOIL GROUP CATEGORY PER THE AASHTO SOIL CLASSIFICATION SYSTEM IS ALSO SHOWN.

NO.	DATE	BY	CHECK	DESIGN	REVISION / SUBMITTAL

DESIGNED BY: KR CHECKED BY: KJK
DRAWN BY: MSK CHECKED BY: KJK

AECOM Kimley»Horn

90% SUBMISSION - 01/22/16

METROPOLITAN COUNCIL

SOUTHWEST Green Line LRT Extension

CIVIL - VOLUME 4G
5TH AVENUE AND 7TH STREET
BRIDGE 27C18
BRIDGE SURVEY PROFILE 7

DISCIPLINE: STRUCTURES
SHEET NAME: CBR27C18-BRG-BOR-010

SHEET 144 OF 148

Jan. 18 2016 03:59 pm V:\3400_ADC\CAD\SEGMENT E4\PLAN SHEETS\STRUCTURES\27C18\CBR27C18-BRG-BOR-004.dwg By: Victor.Madrid

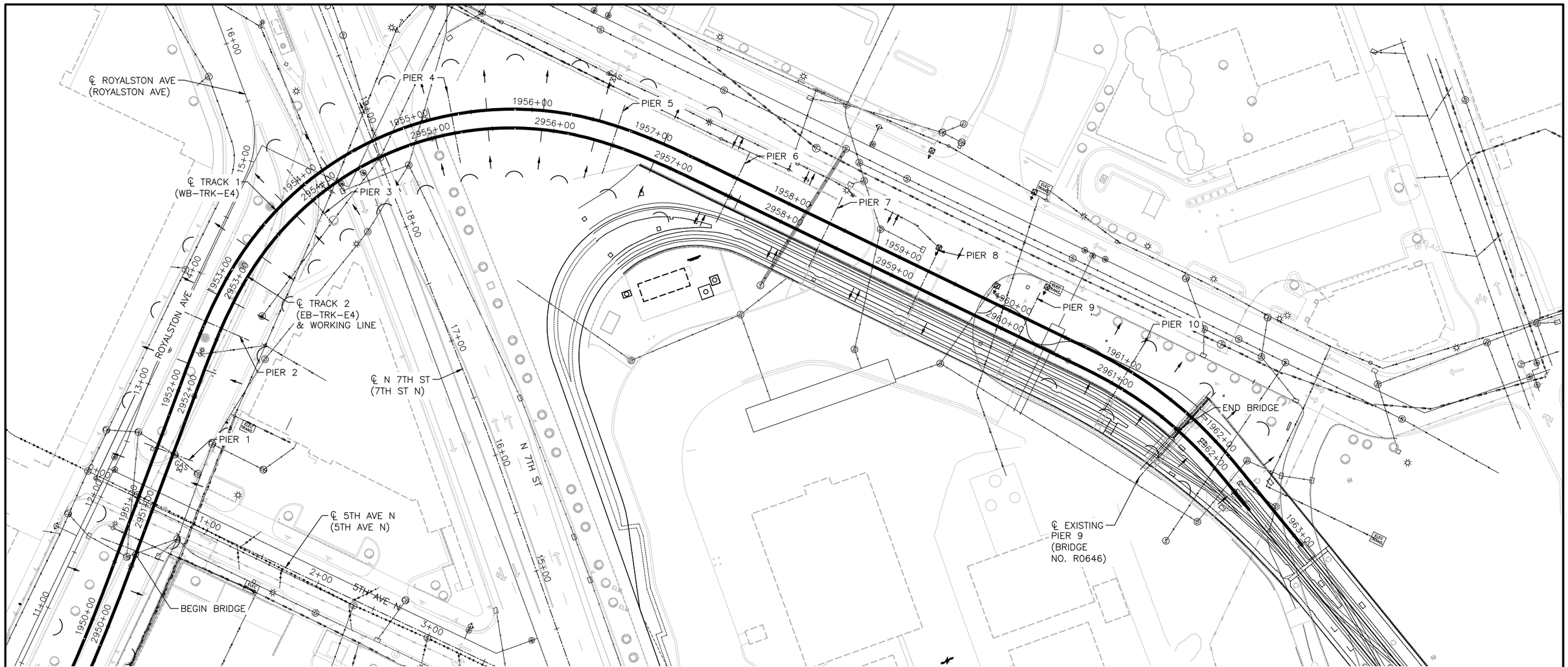

PROPOSED CONSTRUCTION SEQUENCING – STAGE 1

STAGING NOTES:

1. COMPLETE TRAFFIC SWITCH ON ROYALSTON AVE. TO REMOVE TRAFFIC FROM NORTH BOUND LANES.

STAGING REQUIREMENTS:

TWO LANES OF TRAFFIC IN EACH DIRECTION ALONG N. 7TH ST. SHALL BE MAINTAINED AS REQUIRED BY THE SPECIAL PROVISIONS.

PEDESTRIAN AND BICYCLE TRAFFIC ALONG N. 7TH ST. SHALL BE MAINTAINED AS REQUIRED BY THE SPECIAL PROVISIONS.

EXISTING UTILITIES WILL BE RELOCATED BY OTHERS.

NO.	DATE	BY	CHECK	DESIGN	REVISION / SUBMITTAL

DESIGNED BY: DJL | CHECKED BY: KJK
DRAWN BY: MSK | CHECKED BY: KJK

AECOM Kimley»Horn

90% SUBMISSION - 01/22/16

METROPOLITAN COUNCIL

SOUTHWEST Green Line LRT Extension

CIVIL - VOLUME 4G
5TH AVENUE AND 7TH STREET BRIDGE 27C18
STAGING PLAN 1

DISCIPLINE: STRUCTURES

SHEET NAME: CBR27C18-BRG-STG-001

SHEET 145 OF 148

Jan. 18 2016 04:03 pm v:\3400_ADC\CAD\SEGMENT E4\PLAN SHEETS\STRUCTURES\27C18\CBR27C18-BRG-STG-001.dwg By: Victor.Madrid

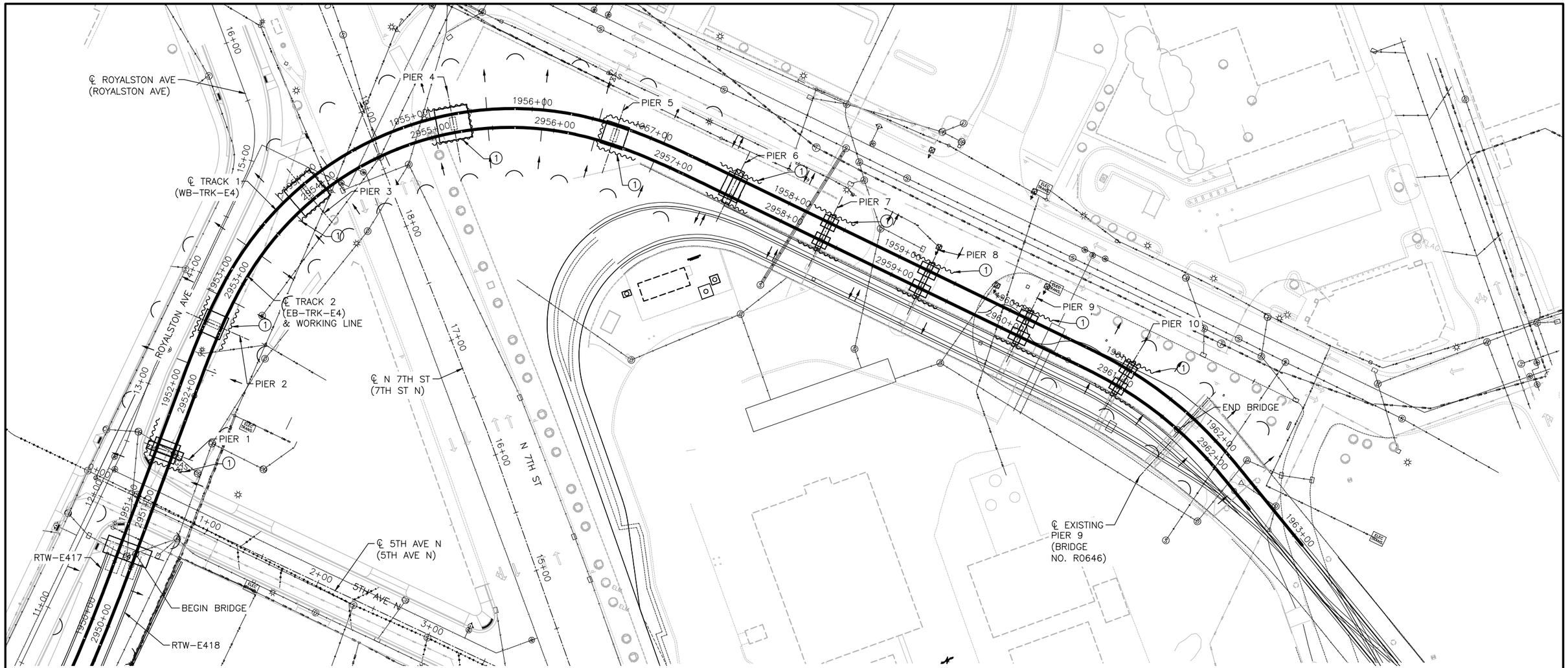
℄ ROYALSTON AVE
(ROYALSTON AVE)
℄ TRACK 1
(WB–TRK–E4)
℄ TRACK 2
(EB–TRK–E4)
& WORKING LINE
ROYALSTON AVE
℄ N 7TH ST
(7TH ST N)
N 7TH ST
℄ 5TH AVE N
(5TH AVE N)
5TH AVE N
PIER 1
PIER 2
PIER 3
PIER 4
PIER 5
PIER 6
PIER 7
PIER 8
PIER 9
PIER 10
END BRIDGE
BEGIN BRIDGE
RTW–E417
RTW–E418
℄ EXISTING
PIER 9
(BRIDGE
NO. R0646)
1950+00
1951+00
1952+00
1953+00
1954+00
1955+00
1956+00
1957+00
1958+00
1959+00
1960+00
1961+00
1962+00
1963+00
2950+00
2951+00
2952+00
2953+00
2954+00
2955+00
2956+00
2957+00
2958+00
2959+00
2960+00
2961+00
2962+00
1+00
2+00
3+00
11+00
12+00
13+00
14+00
15+00
16+00
17+00
18+00
19+00
ELEV
ELEV
ELEV

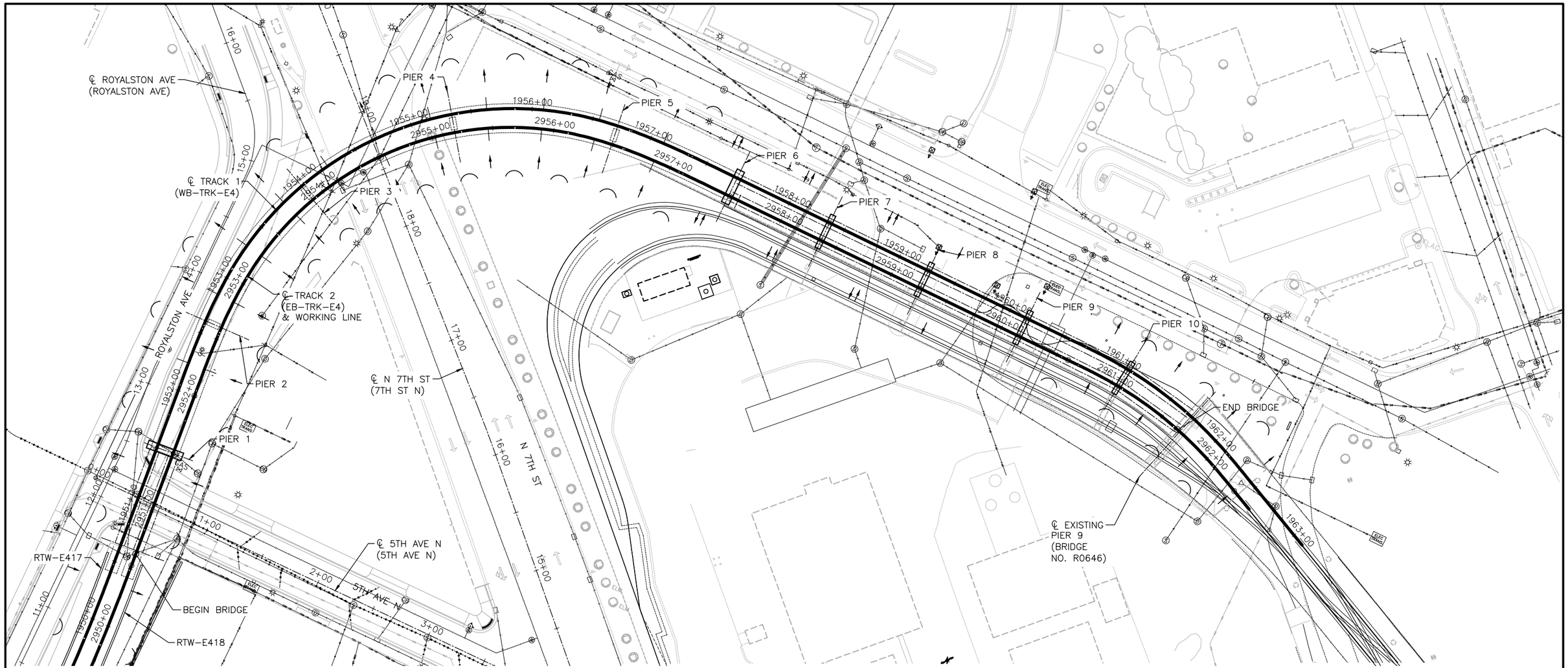

PROPOSED CONSTRUCTION SEQUENCING – STAGE 3

STAGING NOTES:

1. INSTALL BRIDGE 27C18 SPAN 1 AND SPANS 7–11 PRECAST CONCRETE BEAMS.
2. ERECT FALSEWORK FOR BRIDGE 27C18 SPANS 2–6 CAST–IN–PLACE CONCRETE BOX BEAM.
3. CAST BRIDGE 27C18 CAST–IN–PLACE CONCRETE BOX BEAM.

STAGING REQUIREMENTS:

TWO LANES OF TRAFFIC IN EACH DIRECTION ALONG N. 7TH ST. SHALL BE MAINTAINED AS REQUIRED BY THE SPECIAL PROVISIONS.

PEDESTRIAN AND BICYCLE TRAFFIC ALONG N. 7TH ST. SHALL BE MAINTAINED AS REQUIRED BY THE SPECIAL PROVISIONS.

EXISTING UTILITIES WILL BE RELOCATED BY OTHERS.

NO.	DATE	BY	CHECK	DESIGN	REVISION / SUBMITTAL

DESIGNED BY: DJL CHECKED BY: KJK
DRAWN BY: MSK CHECKED BY: KJK

AECOM Kimley»Horn

90% SUBMISSION - 01/22/16

METROPOLITAN COUNCIL

SOUTHWEST Green Line LRT Extension

CIVIL - VOLUME 4G
5TH AVENUE AND 7TH STREET BRIDGE 27C18
STAGING PLAN 3

DISCIPLINE: STRUCTURES

SHEET NAME: CBR27C18-BRG-STG-003

SHEET 147 OF 148

Jan, 18 2016 04:12 pm v:\3400_ADC\CAD\SEGMENT E4\PLAN SHEETS\STRUCTURES\27C18\CBR27C18-BRG-STG-003.dwg By: Victor.Madrid

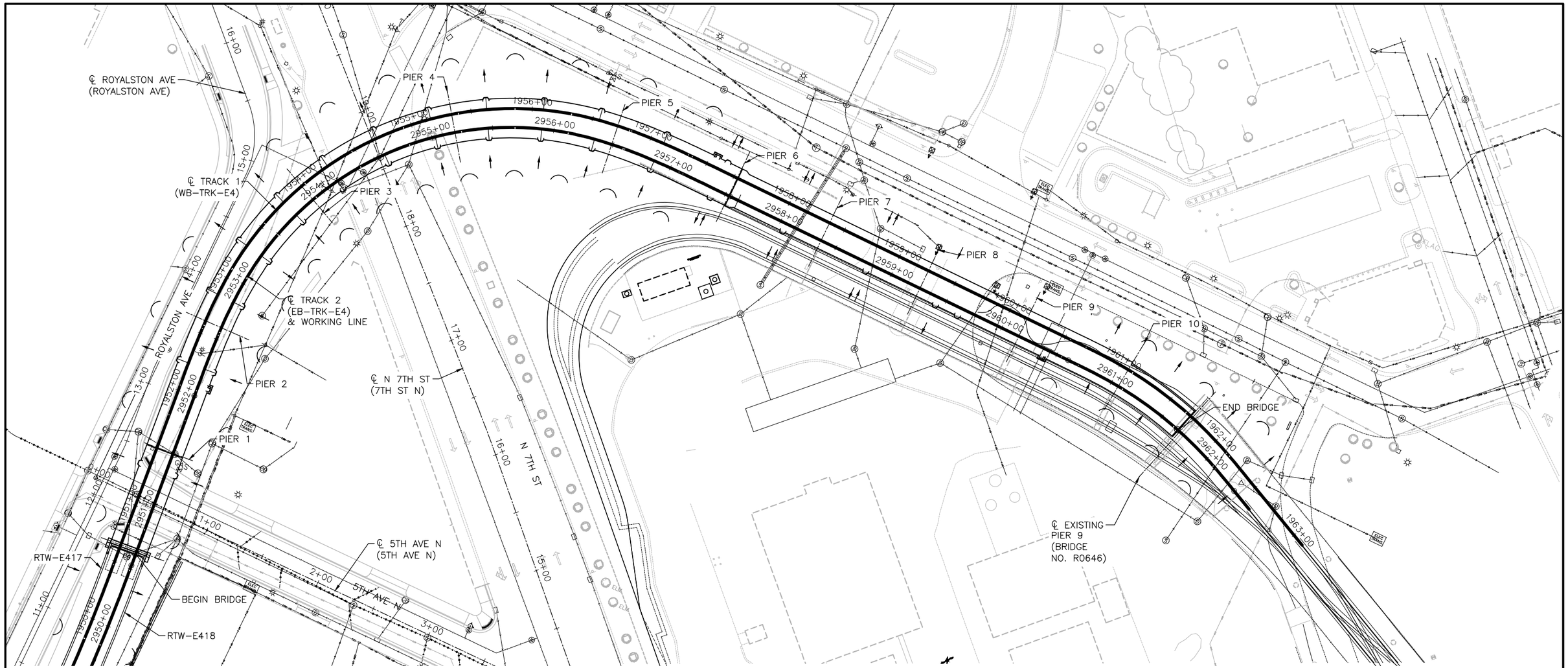

PROPOSED CONSTRUCTION SEQUENCING – STAGE 4

STAGING NOTES:

1. CAST BRIDGE 27C18 CONCRETE DECK.
2. CAST CONCRETE CURB AND WALKWAYS.

STAGING REQUIREMENTS:

TWO LANES OF TRAFFIC IN EACH DIRECTION ALONG N. 7TH ST. SHALL BE MAINTAINED AS REQUIRED BY THE SPECIAL PROVISIONS.

PEDESTRIAN AND BICYCLE TRAFFIC ALONG N. 7TH ST. SHALL BE MAINTAINED AS REQUIRED BY THE SPECIAL PROVISIONS.

EXISTING UTILITIES WILL BE RELOCATED BY OTHERS.

NO.	DATE	BY	CHECK	DESIGN	REVISION / SUBMITTAL

DESIGNED BY: DJL CHECKED BY: KJK
DRAWN BY: MSK CHECKED BY: KJK

AECOM Kimley»Horn

90% SUBMISSION - 01/22/16

METROPOLITAN COUNCIL

SOUTHWEST Green Line LRT Extension

CIVIL - VOLUME 4G
5TH AVENUE AND 7TH STREET
BRIDGE 27C18
STAGING PLAN 4

DISCIPLINE: STRUCTURES

SHEET NAME: CBR27C18-BRG-STG-004

SHEET 148 OF 148

Jan, 18 2016 04:16 pm v:\3400_ADC\CAD\SEGMENT E4\PLAN SHEETS\STRUCTURES\27C18\CBR27C18-BRG-STG-004.dwg By: Victor.Madrid