METROPOLITAN COUNCIL

SOUTHWEST
Green Line LRT Extension

CIVIL CONSTRUCTION

VOLUME 4F
BRIDGES

90% SUBMISSION
DATE : 01/22/16

PLAN PACKAGE INDEX / DESCRIPTION	
CIVIL CONSTRUCTION	BID ALTERNATES
VOLUME 1 - EXISTING CONDITIONS & REMOVALS	VOLUME A - NOT USED
VOLUME 2A - CIVIL	VOLUME B - NOT USED
VOLUME 2B - CIVIL	VOLUME C - BID ALTERNATE 3 (LRCI 5) ▲
VOLUME 3A - TRACKWORK	VOLUME D - BID ALTERNATE 4 (LRCI 6) ▲
VOLUME 3B - TRACKWORK	VOLUME E - BID ALTERNATE 5 (LRCI 7) ▲
VOLUME 3C - TRACKWORK DETAILS	VOLUME F - BID ALTERNATE 6 (LRCI 8) ▲
VOLUME 4A - BRIDGES	VOLUME G - BID ALTERNATE 7 (LRCI 4) ▲
VOLUME 4B - BRIDGES	VOLUME H - BID ALTERNATE 8 (LRCI 10) ▲
VOLUME 4C - BRIDGES	VOLUME I - BID ALTERNATE 9 (LRCI 11) ▲
VOLUME 4D - BRIDGES	VOLUME J - BID ALTERNATE 10 (LRCI 12)
VOLUME 4E - BRIDGES	VOLUME K - BID ALTERNATE 11 (LRCI 13)
VOLUME 4F - BRIDGES	VOLUME L - BID ALTERNATE 12 (LRCI 14)
VOLUME 4G - BRIDGES	VOLUME M - BID ALTERNATE 13 (LRCI 26)
VOLUME 5 - TUNNELS	VOLUME N - BID ALTERNATE 14 (LRCI 27)
VOLUME 6 - RETAINING WALLS	VOLUME O - BID ALTERNATE 15 (LRCI 17)
VOLUME 7 - UTILITIES	VOLUME P - BID ALTERNATE 20 (LRCI 32)
VOLUME 8 - DRAINAGE	VOLUME Q - BID ALTERNATE 21 (LRCI 33)
VOLUME 9 - URBAN DESIGN / LANDSCAPE	
VOLUME 10A - TRAFFIC	
VOLUME 10B - LIGHTING *	
VOLUME 11A - STATIONS ▲	
VOLUME 11B - STATIONS	
VOLUME 11C - STATIONS	
VOLUME 11D - STATIONS	
VOLUME 11E - STATIONS	
VOLUME 12 - SYSTEMS	

* TO BE SUBMITTED AT A LATER DATE
▲ SUBMITTED AT 75%, NOT INCLUDED IN 90%

THE PROPOSED SOUTHWEST LRT PROJECT IS NOT FINAL BUT IS STILL UNDER ENVIRONMENTAL REVIEW AND THE PROJECT IS SUBJECT TO CHANGE. THESE PLANS ARE NOT FINAL.

THE COUNCIL, THROUGH THE DEVELOPMENT OF THESE PLANS, DOES NOT INTEND THAT THEY WILL PREJUDICE OR COMPROMISE ANY STATE OR FEDERAL ENVIRONMENTAL REVIEW OR OTHER LEGAL REQUIREMENTS. THESE PLANS DO NOT LIMIT THE PROJECT DESIGN ALTERNATIVES OR MITIGATIVE MEASURES THAT THE COUNCIL MAY UNDERTAKE IF THE PROPOSED SWLRT PROJECT PROCEEDS TO CONSTRUCTION.

THE COUNCIL WILL NOT TAKE FINAL ACTION ON THIS MATTER UNLESS THE COUNCIL PROCEEDS WITH THE PROJECT AFTER THE FTA'S RECORD OF DECISION AND THE COUNCIL'S DETERMINATION OF ADEQUACY.

WARNING: THIS RECORD MAY CONTAIN SENSITIVE SECURITY INFORMATION THAT IS CONTROLLED UNDER 49 CFR PARTS 15 AND 1520. NO PART OF THIS RECORD MAY BE DISCLOSED TO PERSONS WITHOUT A "NEED TO KNOW", AS DEFINED IN 49 CFR PARTS 15 AND 1520, EXCEPT WITH THE WRITTEN PERMISSION OF THE ADMINISTRATOR OF THE TRANSPORTATION SECURITY ADMINISTRATION OR THE SECRETARY OF TRANSPORTATION. UNAUTHORIZED RELEASE MAY RESULT IN CIVIL PENALTY OR OTHER ACTION. FOR U.S. GOVERNMENT AGENCIES, PUBLIC DISCLOSURE IS GOVERNED BY 5 U.S.C. 552 AND 49 CFR PARTS 15 AND 1520.

AECOM

CIVIL CONSTRUCTION

SHT #	SHEET NAME	SHEET DESCRIPTION	STATION	STATION	REV
		VOLUME 4F - BRIDGES			
1	00-GEN-CVR-001	COVER SHEET			
2	00-GEN-IDX-001	VOLUME INDEX OF PLAN SHEETS SHEET 1			
3	00-GEN-IDX-002	VOLUME INDEX OF PLAN SHEETS SHEET 2			
4	W0-GEN-KEY-001	GENERAL KEY MAP SHEET 1			
5	E0-GEN-KEY-002	GENERAL KEY MAP SHEET 2			
6	00-GEN-NTS-001	GENERAL NOTES, ABBREVIATIONS, AND SYMBOLS SHEET 1			
7	00-GEN-NTS-002	GENERAL NOTES, ABBREVIATIONS, AND SYMBOLS SHEET 2			
		TH 100 FREIGHT RELOCATION - BRIDGE 27W34			
1	CBR27W34-BRG-GPE	GENERAL PLAN AND ELEVATION			
2	CBR27W34-BRG-TRN	TRANSVERSE SECTION AND QUANTITIES			
3	CBR27W34-BRG-SUP-001	BRIDGE LAYOUT			
4	CBR27W34-BRG-ABT-001-1	WEST ABUTMENT DETAILS 1			
5	CBR27W34-BRG-ABT-001-2	WEST ABUTMENT DETAILS 2			
6	CBR27W34-BRG-ABT-001-3	WEST ABUTMENT DETAILS 3			
7	CBR27W34-BRG-ABT-001-4	WEST ABUTMENT DETAILS 4			
8	CBR27W34-BRG-ABT-001-5	WEST ABUTMENT REINFORCEMENT 1			
9	CBR27W34-BRG-ABT-001-6	WEST ABUTMENT REINFORCEMENT 2			
10	CBR27W34-BRG-ABT-001-7	WEST ABUTMENT REINFORCEMENT 3			
11	CBR27W34-BRG-ABT-001-8	WEST ABUTMENT REINFORCEMENT 4			
12	CBR27W34-BRG-ABT-001-9	WEST ABUTMENT REINFORCEMENT 5			
13	CBR27W34-BRG-ABT-001-10	WEST ABUTMENT REINFORCEMENT 6			
14	CBR27W34-BRG-ABT-001-11	WEST ABUTMENT REINFORCEMENT 7			
15	CBR27W34-BRG-ABT-002-1	EAST ABUTMENT DETAILS 1			
16	CBR27W34-BRG-ABT-002-2	EAST ABUTMENT DETAILS 2			
17	CBR27W34-BRG-ABT-002-3	EAST ABUTMENT DETAILS 3			
18	CBR27W34-BRG-ABT-002-4	EAST ABUTMENT DETAILS 4			
19	CBR27W34-BRG-ABT-002-5	EAST ABUTMENT REINFORCEMENT 1			
20	CBR27W34-BRG-ABT-002-6	EAST ABUTMENT REINFORCEMENT 2			
21	CBR27W34-BRG-ABT-002-7	EAST ABUTMENT REINFORCEMENT 3			
22	CBR27W34-BRG-ABT-002-8	EAST ABUTMENT REINFORCEMENT 4			
23	CBR27W34-BRG-ABT-002-9	EAST ABUTMENT REINFORCEMENT 5			
24	CBR27W34-BRG-ABT-002-10	EAST ABUTMENT REINFORCEMENT 6			
25	CBR27W34-BRG-ABT-002-11	EAST ABUTMENT REINFORCEMENT 7			
26	CBR27W34-BRG-PIR-001-1	PIER DETAILS 1			
27	CBR27W34-BRG-PIR-001-2	PIER DETAILS 2			
28	CBR27W34-BRG-PIR-002-1	PIER REINFORCEMENT 1			
29	CBR27W34-BRG-PIR-002-2	PIER REINFORCEMENT 2			
30	CBR27W34-BRG-SUP-002-1	FRAMING PLAN			
31	CBR27W34-BRG-SUP-002-2	BALLAST PLATE REMOVAL PLAN			
32	CBR27W34-BRG-SUP-003	CORNER DETAILS			
33	CBR27W34-BRG-REF-001-1	SUPERSTRUCTURE DETAILS 1			
34	CBR27W34-BRG-REF-001-2	SUPERSTRUCTURE DETAILS 2			
35	CBR27W34-BRG-REF-001-3	SUPERSTRUCTURE DETAILS 3			
36	CBR27W34-BRG-REF-001-4	SUPERSTRUCTURE DETAILS 4			
37	CBR27W34-BRG-REF-001-5	SUPERSTRUCTURE DETAILS 5			
38	CBR27W34-BRG-REF-001-6	SUPERSTRUCTURE DETAILS 6			
39	CBR27W34-BRG-REF-001-7	SUPERSTRUCTURE DETAILS 7			
40	CBR27W34-BRG-REF-001-8	SUPERSTRUCTURE DETAILS 8			
41	CBR27W34-BRG-REF-001-9	SUPERSTRUCTURE DETAILS 9			
42	CBR27W34-BRG-REF-001-10	SUPERSTRUCTURE DETAILS 10			
43	CBR27W34-BRG-REF-001-11	SUPERSTRUCTURE DETAILS 11			
44	CBR27W34-BRG-REF-001-12	SUPERSTRUCTURE DETAILS 12			
45	CBR27W34-BRG-REF-001-13	SUPERSTRUCTURE DETAILS 13			
46	CBR27W34-BRG-REF-001-14	SUPERSTRUCTURE DETAILS 14			
47	CBR27W34-BRG-REF-001-15	SUPERSTRUCTURE DETAILS 15			
48	CBR27W34-BRG-REF-001-16	SUPERSTRUCTURE DETAILS 16			
49	CBR27W34-BRG-RAL-001	RAILING DETAILS 1			
50	CBR27W34-BRG-RAL-002	RAILING DETAILS 2			
51	CBR27W34-BRG-DRN-001-1	DECK DRAINAGE AND WATERPROOFING 1			
52	CBR27W34-BRG-DRN-001-2	DECK DRAINAGE AND WATERPROOFING 2			
53	CBR27W34-BRG-DTL-001-1	CONCRETE SLOPE PAVING UNDER BRIDGES			
54	CBR27W34-BRG-DTL-001-2	BRIDGE DETAILS			
55	CBR27W34-BRG-DTL-002	AS-BUILT BRIDGE DATA			
56	CBR27W34-BRG-SUR-001	BRIDGE SURVEY			
57	CBR27W34-BRG-BOR-001-1	BRIDGE SURVEY PLAN			
58	CBR27W34-BRG-BOR-002-1	BRIDGE SURVEY PROFILE 1			
59	CBR27W34-BRG-BOR-002-2	BRIDGE SURVEY PROFILE 2			
60	CBR27W34-BRG-BOR-002-3	BRIDGE SURVEY PROFILE 3			
61	CBR27W34-BRG-STG-001-1	STAGING PLAN 1			
62	CBR27W34-BRG-STG-001-2	STAGING PLAN 2			
63	CBR27W34-BRG-STG-001-3	STAGING PLAN 3			
64	CBR27W34-BRG-STG-001-4	STAGING PLAN 4			
65	CBR27W34-BRG-STG-001-5	STAGING PLAN 5			
66	CBR27W34-BRG-STG-001-6	STAGING PLAN 6			
67	CBR27W34-BRG-STG-001-7	STAGING PLAN 7			
68	CBR27W34-BRG-STG-001-8	STAGING PLAN 8			
		TH 100 LRT - BRIDGE 27303			
1	CBR27303-BRG-GPE	GENERAL PLAN AND ELEVATION			
2	CBR27303-BRG-TRN	TRANSVERSE SECTION AND QUANTITIES			
3	CBR27303-BRG-SUP-001	BRIDGE LAYOUT			
4	CBR27303-BRG-ABT-001	WEST ABUTMENT DETAILS 1			
5	CBR27303-BRG-ABT-002-1	WEST ABUTMENT DETAILS 2			
6	CBR27303-BRG-ABT-002-2	WEST ABUTMENT DETAILS 3			
7	CBR27303-BRG-ABT-002-3	WEST ABUTMENT DETAILS 4			
8	CBR27303-BRG-ABT-002-4	WEST ABUTMENT DETAILS 5			
9	CBR27303-BRG-ABT-002-5	WEST ABUTMENT REINFORCEMENT 1			
10	CBR27303-BRG-ABT-002-6	WEST ABUTMENT REINFORCEMENT 2			
11	CBR27303-BRG-ABT-002-7	WEST ABUTMENT REINFORCEMENT 3			
12	CBR27303-BRG-ABT-002-8	WEST ABUTMENT REINFORCEMENT 4			
13	CBR27303-BRG-ABT-003	EAST ABUTMENT DETAILS 1			
14	CBR27303-BRG-ABT-004-1	EAST ABUTMENT DETAILS 2			
15	CBR27303-BRG-ABT-004-2	EAST ABUTMENT DETAILS 3			
16	CBR27303-BRG-ABT-004-3	EAST ABUTMENT DETAILS 4			
17	CBR27303-BRG-ABT-004-4	EAST ABUTMENT DETAILS 5			
18	CBR27303-BRG-ABT-004-5	EAST ABUTMENT REINFORCEMENT 1			
19	CBR27303-BRG-ABT-004-6	EAST ABUTMENT REINFORCEMENT 2			
20	CBR27303-BRG-ABT-004-7	EAST ABUTMENT REINFORCEMENT 3			
21	CBR27303-BRG-ABT-004-8	EAST ABUTMENT REINFORCEMENT 4			
22	CBR27303-BRG-PIR-001	PIER DETAILS			
23	CBR27303-BRG-SUP-002	FRAMING PLAN			
24	CBR27303-BRG-PCB-001	MN54 PRESTRESSED CONCRETE BEAM DETAILS			
25	CBR27303-BRG-SUP-003-1	SUPERSTRUCTURE DETAILS 1			
26	CBR27303-BRG-SUP-003-2	SUPERSTRUCTURE DETAILS 2			
27	CBR27303-BRG-SUP-004	SUPERSTRUCTURE DETAILS 3			
28	CBR27303-BRG-SUP-003-3	SUPERSTRUCTURE DETAILS 4			
29	CBR27303-BRG-SUP-003-4	SUPERSTRUCTURE DETAILS 5			
30	CBR27303-BRG-SUP-003-5	SUPERSTRUCTURE DETAILS 6			
31	CBR27303-BRG-RAL-001-1	RAILING DETAILS			
32	CBR27303-BRG-RAL-001	CONCRETE PARAPET (TYPE P-1)			
33	CBR27303-BRG-DRN-001-1	DECK DRAINAGE & WATERPROOFING DETAILS 1			
34	CBR27303-BRG-DRN-001-2	DECK DRAINAGE & WATERPROOFING DETAILS 2			
35	CBR27303-BRG-EXP-001	WATERPROOF EXPANSION DEVICE			
36	CBR27303-BRG-DTL-001-1	BRIDGE DETAILS 1			
37	CBR27303-BRG-DTL-001-2	BRIDGE DETAILS 2			
38	CBR27303-BRG-DTL-001-3	BRIDGE DETAILS 3			
39	CBR27303-BRG-DTL-002	AS-BUILT BRIDGE DATA			
40	CBR27303-BRG-SUR-001	BRIDGE SURVEY			
41	CBR27303-BRG-BOR-001-1	BRIDGE SURVEY PLAN			
42	CBR27303-BRG-BOR-002-1	BRIDGE SURVEY PROFILE 1			
43	CBR27303-BRG-BOR-002-2	BRIDGE SURVEY PROFILE 2			
44	CBR27303-BRG-BOR-002-3	BRIDGE SURVEY PROFILE 3			
45	CBR27303-BRG-STG-001-1	STAGING PLAN 1			
46	CBR27303-BRG-STG-001-2	STAGING PLAN 2			
47	CBR27303-BRG-STG-001-3	STAGING PLAN 3			
48	CBR27303-BRG-STG-001-4	STAGING PLAN 4			
49	CBR27303-BRG-STG-001-5	STAGING PLAN 5			
50	CBR27303-BRG-STG-001-6	STAGING PLAN 6			
51	CBR27303-BRG-STG-001-7	STAGING PLAN 7			
52	CBR27303-BRG-STG-001-8	STAGING PLAN 8			
		CEDAR LAKE TRAIL BELTLINE STATION - BRIDGE R0692 (TRL)			
1	CBRR0692-BRG-GPE-001	KEY PLAN			
2	CBRR0692-BRG-GPE-002	GENERAL PLAN AND ELEVATION 1			
3	CBRR0692-BRG-GPE-003	GENERAL PLAN AND ELEVATION 2			
4	CBRR0692-BRG-GPE-004	GENERAL PLAN AND ELEVATION 3			
5	CBRR0692-BRG-TRN-001	TRANSVERSE SECTION AND QUANTITIES			
6	CBRR0692-BRG-LYT-001	BRIDGE LAYOUT 1			
7	CBRR0692-BRG-LYT-002	BRIDGE LAYOUT 2			
8	CBRR0692-BRG-ABT-001	WEST ABUTMENT DETAILS 1			
9	CBRR0692-BRG-ABT-002	WEST ABUTMENT DETAILS 2			
10	CBRR0692-BRG-ABT-003	WEST ABUTMENT REINFORCEMENT 1			
11	CBRR0692-BRG-ABT-004	WEST ABUTMENT REINFORCEMENT 2			
12	CBRR0692-BRG-ABT-005	WEST ABUTMENT WINGWALLS			
13	CBRR0692-BRG-TRN-002	WEST ABUTMENT REINFORCEMENT 3			
14	CBRR0692-BRG-ABT-006	EAST ABUTMENT DETAILS 1			
15	CBRR0692-BRG-ABT-007	EAST ABUTMENT DETAILS 2			
16	CBRR0692-BRG-ABT-008	EAST ABUTMENT REINFORCEMENT 1			
17	CBRR0692-BRG-ABT-009	EAST ABUTMENT REINFORCEMENT 2			
18	CBRR0692-BRG-ABT-010	EAST ABUTMENT WINGWALLS			
19	CBRR0692-BRG-TRN-003	EAST ABUTMENT REINFORCEMENT 3			
20	CBRR0692-BRG-PIR-001	PIERS 1, 4-6, 9-11 DETAILS			
21	CBRR0692-BRG-PIR-002	PIERS 1, 4-6, 9-11 REINFORCEMENT 1			
22	CBRR0692-BRG-TRN-004	PIERS 1, 4-6, 9-11 REINFORCEMENT 2			
23	CBRR0692-BRG-PIR-003	PIERS 2, 3, 7 AND 8 DETAILS 1			
24	CBRR0692-BRG-PIR-004	PIERS 2, 3, 7 AND 8 DETAILS 2			
25	CBRR0692-BRG-PIR-005	PIERS 2, 3, 7 AND 8 REINFORCEMENT 1			
26	CBRR0692-BRG-PIR-006	PIERS 2, 3, 7 AND 8 REINFORCEMENT 2			
27	CBRR0692-BRG-PIR-007	PIER 2, 3, 7 AND 8 FILLET			
28	CBRR0692-BRG-TRN-005	PIERS 2, 3, 7 AND 8 REINFORCEMENT 3			
29	CBRR0692-BRG-TRN-006	PIERS 2, 3, 7 AND 8 REINFORCEMENT 4			
30	CBRR0692-BRG-SUP-001	CORNER DETAILS			
31	CBRR0692-BRG-SUP-002	SUPERSTRUCTURE DETAILS 1			
32	CBRR0692-BRG-SUP-003	SUPERSTRUCTURE DETAILS 2			
33	CBRR0692-BRG-SUP-004	SUPERSTRUCTURE DETAILS 3			
34	CBRR0692-BRG-SUP-005	SUPERSTRUCTURE DETAILS 4			
35	CBRR0692-BRG-SUP-006	SUPERSTRUCTURE DETAILS 5			
36	CBRR0692-BRG-SUP-007	SUPERSTRUCTURE DETAILS 6			
37	CBRR0692-BRG-SUP-008	SUPERSTRUCTURE DETAILS 7			
38	CBRR0692-BRG-SUP-009	END DIAPHRAGM DETAILS			
39	CBRR0692-BRG-SUP-010	PREFABRICATED TRUSS			
40	CBRR0692-BRG-SUP-011	CURB DETAILS 1			
41	CBRR0692-BRG-SUP-012	CURB DETAILS 2			
42	CBRR0692-BRG-SUP-013	CURB DETAILS 3			
43	CBRR0692-BRG-SUP-014	CURB DETAILS 4			
44	CBRR0692-BRG-SUP-015	CURB DETAILS 5			
45	CBRR0692-BRG-TRN-007	SUPERSTRUCTURE REINFORCEMENT			
46	CBRR0692-BRG-RAL-001	WIRE FENCE			
47	CBRR0692-BRG-DTL-001	WATERPROOF EXPANSION DEVICE			
48	CBRR0692-BRG-APCH-001	APPROACH PANEL DETAILS			
49	CBRR0692-BRG-DTL-002	BRIDGE DETAILS			
50	CBRR0692-BRG-DTL-003	AS-BUILT BRIDGE DATA			
51	CBRR0692-BRG-SUR-001	BRIDGE SURVEY 1			
52	CBRR0692-BRG-SUR-002	BRIDGE SURVEY 2			
53	CBRR0692-BRG-SUR-003	BRIDGE SURVEY 3			
54	CBRR0692-BRG-BOR-001	BRIDGE SURVEY PLAN			
55	CBRR0692-BRG-BOR-002	BRIDGE SURVEY PROFILE 1			
56	CBRR0692-BRG-BOR-003	BRIDGE SURVEY PROFILE 2			
57	CBRR0692-BRG-BOR-004	BRIDGE SURVEY PROFILE 3			
58	CBRR0692-BRG-BOR-005	BRIDGE SURVEY PROFILE 4			
59	CBRR0692-BRG-STG-001	FOUNDATION STAGING PLAN 1			
60	CBRR0692-BRG-STG-002	FOUNDATION STAGING PLAN 2			
		CSAH (W LAKE STREET) BRIDGE - BRIDGE 27037 PIER PROTECTION			
1	EX3-STU-PPR-WLKS-VEH-GPE-001	GENERAL PLAN AND ELEVATION			
2	EX3-STU-PPR-WLKS-VEH-DTL-002	SCHEDULE OF QUANTITIES			
3	EX3-STU-PPR-WLKS-VEH-PIR-001	PIER PROTECTION DETAILS 1			
4	EX3-STU-PPR-WLKS-VEH-PIR-002	PIER PROTECTION DETAILS 2			
5	EX3-STU-PPR-WLKS-VEH-PIR-003	PIER PROTECTION DETAILS 3			
6	EX3-STU-PPR-WLKS-VEH-PIR-004	PIER PROTECTION DETAILS 4			
7	EX3-STU-PPR-WLKS-VEH-PIR-005	PIER PROTECTION REINFORCEMENT 1			
8	EX3-STU-PPR-WLKS-VEH-PIR-006	PIER PROTECTION REINFORCEMENT 2			
9	EX3-STU-PPR-WLKS-VEH-PIR-007	PIER PROTECTION REINFORCEMENT 3			
10	EX3-STU-PPR-WLKS-VEH-PIR-008	PIER PROTECTION REINFORCEMENT 4			
11	EX3-STU-PPR-WLKS-VEH-PIR-009	AESTHETIC DETAILS			
12	CBR27037-BRM-GPE-001	EXISTING GENERAL PLAN AND SECTIONS			
13	CBR27037-BRM-DTL-001	REMOVAL DETAILS			
14	CBR27037-BRM-GPE-002	PROPOSED GENERAL PLAN AND SECTIONS			
15	CBR27037-BRM-DTL-002	SIDEWALK DETAILS & REINFORCEMENT 1			
16	CBR27037-BRM-DTL-003	SIDEWALK DETAILS & REINFORCEMENT 2			
17	CBR27037-BRM-DTL-004	ORNAMENTAL METAL RAILING			
18	CBR27037-BRM-DTL-005	STRUCTURAL TUBE RAILING DETAILS			
19	CBR27037-BRM-DTL-006	ORNAMENTAL METAL RAILING ELEVATIONS			
20	CBR27037-BRM-DTL-007	NORTH RAIL ELEVATIONS			
21	CBR27037-BRM-DTL-008	SOUTH RAIL ELEVATIONS			

NO.	DATE	BY	CHECK	DESIGN	REVISION / SUBMITTAL

AECOM

90% SUBMISSION - 01/22/16

METROPOLITAN COUNCIL

SOUTHWEST Green Line LRT Extension

CIVIL - VOLUME 4F
GENERAL
VOLUME INDEX OF PLAN SHEETS
SHEET 1

DISCIPLINE: GENERAL

SHEET NAME: 00-GEN-IDX-001

SHEET 2 OF 381

Jan, 21 2016 08:15 pm V:\3400_ADC\CAD\CAD MANAGEMENT\DRAWING LIST\COVER SHEETS 90%\90% GEN-IDX_VOL_04.dwg By: v-kriewamr

CIVIL CONSTRUCTION

SHT #	SHEET NAME	SHEET DESCRIPTION	STATION	STATION	REV
		VOLUME 4F - BRIDGES (cont'd)			
22	CBR27037-BRM-DTL-009	SIDEWALK MODIFICATION DETAILS			
23	CBR27037-BRM-DTL-010	CONDUIT SYSTEM			
24	CBR27037-BRM-DTL-011	AS-BUILT BRIDGE DATA			
		CEDAR LAKE CHANNEL FREIGHT BRIDGE - BRIDGE R0694			
1	CBRR0694-BRG-GPE-001	GENERAL PLAN AND ELEVATION			
2	CBRR0694-BRG-TRN-001	TRANSVERSE SECTION AND QUANTITIES			
3	CBRR0694-BRG-LYT-001	BRIDGE LAYOUT			
4	CBRR0694-BRG-ABT-001	SOUTH ABUTMENT DETAILS 1			
5	CBRR0694-BRG-ABT-002	SOUTH ABUTMENT DETAILS 2			
6	CBRR0694-BRG-ABT-003	SOUTH ABUTMENT DETAILS 3			
7	CBRR0694-BRG-ABT-004	SOUTH ABUTMENT DETAILS 4			
8	CBRR0694-BRG-ABT-005	SOUTH ABUTMENT REINFORCEMENT 1			
9	CBRR0694-BRG-ABT-006	SOUTH ABUTMENT REINFORCEMENT 2			
10	CBRR0694-BRG-ABT-007	SOUTH ABUTMENT REINFORCEMENT 3			
11	CBRR0694-BRG-ABT-008	SOUTH ABUTMENT REINFORCEMENT 4			
12	CBRR0694-BRG-ABT-009	SOUTH ABUTMENT REINFORCEMENT 5			
13	CBRR0694-BRG-ABT-010	NORTH ABUTMENT DETAILS 1			
14	CBRR0694-BRG-ABT-011	NORTH ABUTMENT DETAILS 2			
15	CBRR0694-BRG-ABT-012	NORTH ABUTMENT DETAILS 3			
16	CBRR0694-BRG-ABT-013	NORTH ABUTMENT DETAILS 4			
17	CBRR0694-BRG-ABT-014	NORTH ABUTMENT REINFORCEMENT 1			
18	CBRR0694-BRG-ABT-015	NORTH ABUTMENT REINFORCEMENT 2			
19	CBRR0694-BRG-ABT-016	NORTH ABUTMENT REINFORCEMENT 3			
20	CBRR0694-BRG-ABT-017	NORTH ABUTMENT REINFORCEMENT 4			
21	CBRR0694-BRG-ABT-018	NORTH ABUTMENT REINFORCEMENT 5			
22	CBRR0694-BRG-PIR-001	PIER DETAILS 1			
23	CBRR0694-BRG-PIR-002	PIER DETAILS 2			
24	CBRR0694-BRG-PIR-003	PIER DETAILS 3			
25	CBRR0694-BRG-PIR-004	PIER REINFORCEMENT 1			
26	CBRR0694-BRG-PIR-005	PIER REINFORCEMENT 2			
27	CBRR0694-BRG-PIR-006	PIER REINFORCEMENT 3			
28	CBRR0694-BRG-PIR-007	PIER REINFORCEMENT 4			
29	CBRR0694-BRG-SUP-001	FRAMING PLAN			
30	CBRR0694-BRG-SUP-002	PRESTRESSED CONCRETE BEAM DETAILS 1			
31	CBRR0694-BRG-SUP-003	PRESTRESSED CONCRETE BEAM DETAILS 2			
32	CBRR0694-BRG-SUP-004	PRESTRESSED CONCRETE BEAM DETAILS 3			
33	CBRR0694-BRG-SUP-005	SUPERSTRUCTURE DETAILS 1			
34	CBRR0694-BRG-SUP-006	SUPERSTRUCTURE DETAILS 2			
35	CBRR0694-BRG-SUP-007	SUPERSTRUCTURE DETAILS 3			
36	CBRR0694-BRG-RAL-001	STEEL POST AND CABLE RAILING			
37	CBRR0694-BRG-DTL-001	DECK DRAINAGE AND WATERPROOFING 1			
38	CBRR0694-BRG-DTL-002	DECK DRAINAGE AND WATERPROOFING 2			
39	CBRR0694-BRG-DTL-003	STONE SLOPE PROTECTION DETAILS			
40	CBRR0694-BRG-DTL-004	BRIDGE DETAILS 1			
41	CBRR0694-BRG-DTL-005	BRIDGE DETAILS 2			
42	CBRR0694-BRG-DTL-006	AS-BUILT BRIDGE DATA			
43	CBRR0694-BRG-SUR-001	BRIDGE SURVEY 1			
44	CBRR0694-BRG-SUR-002	BRIDGE SURVEY 2			
45	CBRR0694-BRG-BOR-001	BRIDGE SURVEY PLAN			
46	CBRR0694-BRG-BOR-002	BRIDGE SURVEY PROFILE			
47	CBRR0694-BRG-STG-001	STAGING PLAN 1			
48	CBRR0694-BRG-STG-002	STAGING PLAN 2			
49	CBRR0694-BRG-STG-003	STAGING PLAN 3			
50	CBRR0694-BRG-STG-004	STAGING PLAN 4			
		CEDAR LAKE CHANNEL LRT - BRIDGE R0693			
1	CBRR0693-BRG-GPE-001	GENERAL PLAN & ELEVATION			
2	CBRR0693-BRG-TRN-001	TRANSVERSE SECTION & QUANTITIES			
3	CBRR0693-BRG-LYT-001	BRIDGE LAYOUT			
4	CBRR0693-BRG-ABT-001	SOUTH ABUTMENT DETAILS 1			
5	CBRR0693-BRG-ABT-002	SOUTH ABUTMENT DETAILS 2			
6	CBRR0693-BRG-ABT-003	SOUTH ABUTMENT DETAILS 3			
7	CBRR0693-BRG-ABT-004	SOUTH ABUTMENT REINFORCEMENT 1			
8	CBRR0693-BRG-ABT-005	SOUTH ABUTMENT REINFORCEMENT 2			
9	CBRR0693-BRG-ABT-006	SOUTH ABUTMENT REINFORCEMENT 3			
10	CBRR0693-BRG-ABT-007	SOUTH ABUTMENT REINFORCEMENT 4			
11	CBRR0693-BRG-ABT-008	SOUTH ABUTMENT REINFORCEMENT 5			
12	CBRR0693-BRG-ABT-009	NORTH ABUTMENT DETAILS 1			
13	CBRR0693-BRG-ABT-010	NORTH ABUTMENT DETAILS 2			
14	CBRR0693-BRG-ABT-011	NORTH ABUTMENT DETAILS 3			
15	CBRR0693-BRG-ABT-012	NORTH ABUTMENT REINFORCEMENT 1			
16	CBRR0693-BRG-ABT-013	NORTH ABUTMENT REINFORCEMENT 2			
17	CBRR0693-BRG-ABT-014	NORTH ABUTMENT REINFORCEMENT 3			
18	CBRR0693-BRG-ABT-015	NORTH ABUTMENT REINFORCEMENT 4			
19	CBRR0693-BRG-ABT-016	NORTH ABUTMENT REINFORCEMENT 5			
20	CBRR0693-BRG-SUP-001	SUPERSTRUCTURE DETAILS 1			
21	CBRR0693-BRG-SUP-002	SUPERSTRUCTURE DETAILS 2			
22	CBRR0693-BRG-SUP-003	SUPERSTRUCTURE DETAILS 3			
23	CBRR0693-BRG-SUP-004	SUPERSTRUCTURE REINFORCEMENT 1			
24	CBRR0693-BRG-SUP-005	SUPERSTRUCTURE REINFORCEMENT 2			
25	CBRR0693-BRG-SUP-006	SUPERSTRUCTURE REINFORCEMENT 3			
26	CBRR0693-BRG-DTL-001	CONCRETE PARPAPET			
27	CBRR0693-BRG-DTL-002	STEEL POST AND CABLE RAILING DETAIL			
28	CBRR0693-BRG-DTL-003	STONE SLOPE PROTECTION DETAILS			
29	CBRR0693-BRG-DTL-004	BRIDGE DETAILS 1			
30	CBRR0693-BRG-DTL-005	BRIDGE DETAILS 2			
31	CBRR0693-BRG-DTL-006	AS-BUILT BRIDGE DATA			
32	CBRR0693-BRG-SUR-001	BRIDGE SURVEY 1			
33	CBRR0693-BRG-SUR-002	BRIDGE SURVEY 2			
34	CBRR0693-BRG-BOR-001	BRIDGE SURVEY PLAN			
35	CBRR0693-BRG-BOR-002	BRIDGE SURVEY PROFILE			
36	CBRR0693-BRG-STG-001	STAGING PLAN 1			
37	CBRR0693-BRG-STG-002	STAGING PLAN 2			
38	CBRR0693-BRG-STG-003	STAGING PLAN 3			
39	CBRR0693-BRG-STG-004	STAGING PLAN 4			
		CEDAR LAKE CHANNEL TRAIL - BRIDGE R06XX			
1	CBRR06XX-BRG-GPE-001	GENERAL PLAN & ELEVATION			
2	CBRR06XX-BRG-TRN-001	TRANSVERSE SECTION & QUANTITIES			
3	CBRR06XX-BRG-LYT-001	BRIDGE LAYOUT			
4	CBRR06XX-BRG-ABT-001	SOUTH ABUTMENT DETAILS 1			
5	CBRR06XX-BRG-ABT-002	SOUTH ABUTMENT DETAILS 2			
6	CBRR06XX-BRG-ABT-003	SOUTH ABUTMENT DETAILS 3			
7	CBRR06XX-BRG-ABT-004	SOUTH ABUTMENT REINFORCEMENT 1			
8	CBRR06XX-BRG-ABT-005	SOUTH ABUTMENT REINFORCEMENT 2			
9	CBRR06XX-BRG-ABT-006	SOUTH ABUTMENT REINFORCEMENT 3			
10	CBRR06XX-BRG-ABT-007	SOUTH ABUTMENT REINFORCEMENT 4			
11	CBRR06XX-BRG-ABT-008	NORTH ABUTMENT DETAILS 1			
12	CBRR06XX-BRG-ABT-009	NORTH ABUTMENT DETAILS 2			
13	CBRR06XX-BRG-ABT-010	NORTH ABUTMENT DETAILS 3			
14	CBRR06XX-BRG-ABT-011	NORTH ABUTMENT DETAILS 4			
15	CBRR06XX-BRG-ABT-012	NORTH ABUTMENT REINFORCEMENT 1			
16	CBRR06XX-BRG-ABT-013	NORTH ABUTMENT REINFORCEMENT 2			
17	CBRR06XX-BRG-ABT-014	NORTH ABUTMENT REINFORCEMENT 3			
18	CBRR06XX-BRG-ABT-015	NORTH ABUTMENT REINFORCEMENT 4			
19	CBRR06XX-BRG-ABT-016	NORTH ABUTMENT REINFORCEMENT 5			
20	CBRR06XX-BRG-SUP-001	SUPERSTRUCTURE DETAILS & REINF. 1			
21	CBRR06XX-BRG-SUP-002	SUPERSTRUCTURE DETAILS & REINF. 2			
22	CBRR06XX-BRG-SUP-003	SUPERSTRUCTURE DETAILS & REINF. 3			
23	CBRR06XX-BRG-SUP-004	SUPERSTRUCTURE DETAILS & REINF. 4			
24	CBRR06XX-BRG-SUP-005	SUPERSTRUCTURE DETAILS & REINF. 5			
25	CBRR06XX-BRG-SUP-006	SUPERSTRUCTURE DETAILS & REINF. 6			
26	CBRR06XX-BRG-SUP-007	SUPERSTRUCTURE DETAILS & REINF. 7			
27	CBRR06XX-BRG-DTL-001	ORNAMENTAL RAILING DETAILS			
28	CBRR06XX-BRG-DTL-002	APPROACH PANEL DETAILS & REINF. 1			
29	CBRR06XX-BRG-DTL-003	APPROACH PANEL DETAILS & REINF. 2			
30	CBRR06XX-BRG-DTL-004	STONE SLOPE PROTECTION DETAILS			
31	CBRR06XX-BRG-DTL-005	BRIDGE DETAILS 1			
32	CBRR06XX-BRG-DTL-006	BRIDGE DETAILS 2			
33	CBRR06XX-BRG-DTL-007	AS-BUILT BRIDGE DATA			
34	CBRR06XX-BRG-SUR-001	BRIDGE SURVEY 1			
35	CBRR06XX-BRG-SUR-002	BRIDGE SURVEY 2			
36	CBRR06XX-BRG-BOR-001	BRIDGE SURVEY PLAN			
37	CBRR06XX-BRG-BOR-002	BRIDGE SURVEY PROFILE			
38	CBRR06XX-BRG-STG-001	STAGING PLAN 1			
39	CBRR06XX-BRG-STG-002	STAGING PLAN 2			
40	CBRR06XX-BRG-STG-003	STAGING PLAN 3			
41	CBRR06XX-BRG-STG-004	STAGING PLAN 4			

CIVIL CONSTRUCTION

SHT #	SHEET NAME	SHEET DESCRIPTION	STATION	STATION	REV
		BURNHAM ROAD PIER PROTECTION - BRIDGE 27667			
1	EX3-STU-PPR-BRHR-VEH-GPE-001	GENERAL PLAN AND ELEVATION			
2	EX3-STU-PPR-BRHR-VEH-PIR-001	DETAILS 1			
3	EX3-STU-PPR-BRHR-VEH-PIR-002	DETAILS 2			
4	EX3-STU-PPR-BRHR-VEH-PIR-003	REINFORCEMENT 1			
5	EX3-STU-PPR-BRHR-VEH-PIR-004	REINFORCEMENT 2			
		CSAH 2 (PENN AVE S) BRIDGE SUPERSTRUCTURE MODIFICATIONS - BRIDGE 27758			
1	CBR27758-BRM-GPE-001	EXISTING GENERAL PLAN AND SECTIONS			
2	CBR27758-BRM-TRN-001	SCHEDULE OF QUANTITIES			
3	CBR27758-BRM-DTL-001	REMOVAL DETAILS			
4	CBR27758-BRM-GPE-002	PROPOSED GENERAL PLAN AND SECTIONS			
5	CBR27758-BRM-DTL-002	SIDEWALK DETAILS AND REINFORCEMENT			
6	CBR27758-BRM-DTL-003	ORNAMENTAL METAL RAILING			
7	CBR27758-BRM-DTL-004	GATE DETAILS			
8	CBR27758-BRM-DTL-005	SIDEWALK MODIFICATION DETAILS			
9	CBR27758-BRM-SUP-001	FRAMING PLAN			
10	CBR27758-BRM-DTL-006	STIFFENER DETAILS 1			
11	CBR27758-BRM-DTL-007	STIFFENER DETAILS 2			
12	CBR27758-BRM-DTL-008	AS-BUILT BRIDGE DATA			
		TH 394 PIER PROTECTION - BRIDGE 27770C			
1	EX4-STU-PPR-T394-VEH-GPE-001	GENERAL PLAN AND ELEVATION			
2	EX4-STU-PPR-T394-VEH-PIR-001	DETAILS 1			
3	EX4-STU-PPR-T394-VEH-PIR-002	DETAILS 2			
4	EX4-STU-PPR-T394-VEH-PIR-003	DETAILS 3			
5	EX4-STU-PPR-T394-VEH-PIR-004	DETAILS 4			
6	EX4-STU-PPR-T394-VEH-PIR-005	DETAILS 5			
7	EX4-STU-PPR-T394-VEH-PIR-006	DETAILS 6			
8	EX4-STU-PPR-T394-VEH-PIR-007	DETAILS 7			
9	EX4-STU-PPR-T394-VEH-PIR-008	DETAILS 8			
10	EX4-STU-PPR-T394-VEH-PIR-009	REINFORCEMENT 1			
11	EX4-STU-PPR-T394-VEH-PIR-010	REINFORCEMENT 2			
12	EX4-STU-PPR-T394-VEH-PIR-011	REINFORCEMENT 3			
13	EX4-STU-PPR-T394-VEH-PIR-012	REINFORCEMENT 4			
14	EX4-STU-PPR-T394-VEH-PIR-013	REINFORCEMENT 5			
15	EX4-STU-PPR-T394-VEH-PIR-014	REINFORCEMENT 6			
16	EX4-STU-PPR-T394-VEH-PIR-015	REINFORCEMENT 7			
17	EX4-STU-PPR-T394-VEH-PIR-016	REINFORCEMENT 8			
18	EX4-STU-PPR-T394-VEH-PIR-017	REINFORCEMENT 9			
19	EX4-STU-PPR-T394-VEH-PIR-018	REINFORCEMENT 10			
20	EX4-STU-PPR-T394-VEH-PIR-019	REINFORCEMENT 11			
21	EX4-STU-PPR-T394-VEH-PIR-020	REINFORCEMENT 12			
22	EX4-STU-PPR-T394-VEH-PIR-021	AESTHETIC DETAILS 1			
23	EX4-STU-PPR-T394-VEH-PIR-022	AESTHETIC DETAILS 2			

NO.	DATE	BY	CHECK	DESIGN	REVISION / SUBMITTAL

AECOM

90% SUBMISSION - 01/22/16

METROPOLITAN COUNCIL

SOUTHWEST Green Line LRT Extension

CIVIL - VOLUME 4F
GENERAL
VOLUME INDEX OF PLAN SHEETS
SHEET 2

DISCIPLINE: GENERAL

SHEET NAME: 00-GEN-IDX-002

SHEET 3 OF 381

Jan, 21 2016 08:15 pm V:\3400_ADC\CAD\CAD MANAGEMENT\DRAWING LIST\COVER SHEETS 90%\90% GEN-IDX_VOL_04.dwg By: v-kriewamr

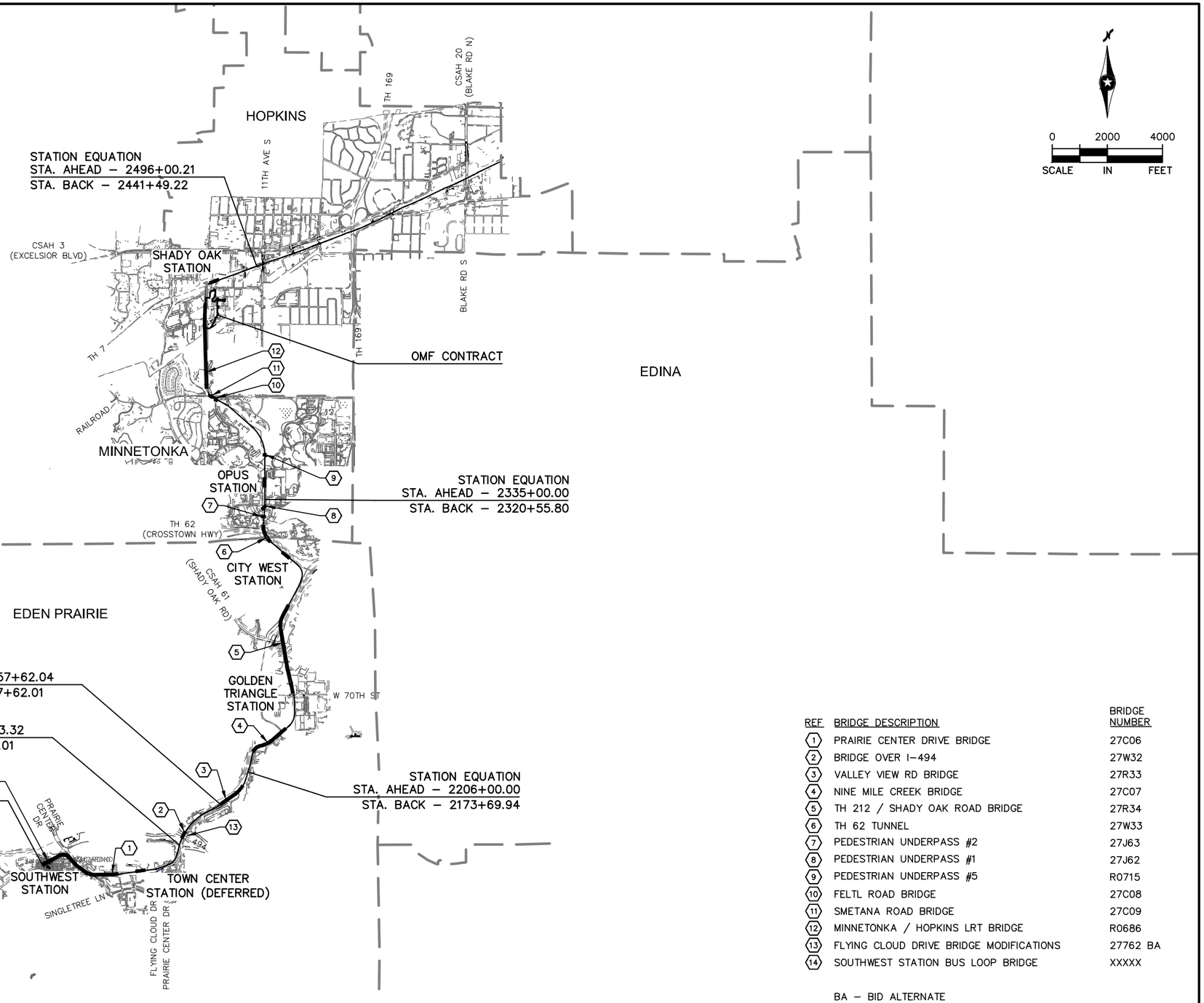

REF	BRIDGE DESCRIPTION	BRIDGE NUMBER
1	PRAIRIE CENTER DRIVE BRIDGE	27C06
2	BRIDGE OVER I–494	27W32
3	VALLEY VIEW RD BRIDGE	27R33
4	NINE MILE CREEK BRIDGE	27C07
5	TH 212 / SHADY OAK ROAD BRIDGE	27R34
6	TH 62 TUNNEL	27W33
7	PEDESTRIAN UNDERPASS #2	27J63
8	PEDESTRIAN UNDERPASS #1	27J62
9	PEDESTRIAN UNDERPASS #5	R0715
10	FELTL ROAD BRIDGE	27C08
11	SMETANA ROAD BRIDGE	27C09
12	MINNETONKA / HOPKINS LRT BRIDGE	R0686
13	FLYING CLOUD DRIVE BRIDGE MODIFICATIONS	27762 BA
14	SOUTHWEST STATION BUS LOOP BRIDGE	XXXXX

BA – BID ALTERNATE

NO.	DATE	BY	CHECK	DESIGN	REVISION / SUBMITTAL

AECOM

90% SUBMISSION - 01/22/16

METROPOLITAN COUNCIL

SOUTHWEST Green Line LRT Extension

CIVIL - VOLUME 4F
GENERAL
KEY MAP
SHEET 1

DISCIPLINE: GENERAL

SHEET NAME: W0-GEN-KEY-001

SHEET 4 OF 381

Jan, 21 2016 08:16 pm v:\3400_ADC\CAD\CAD MANAGEMENT\DRAWING LIST\COVER SHEETS 90%\W0-GEN-KEY.dwg By: v-kriewamr

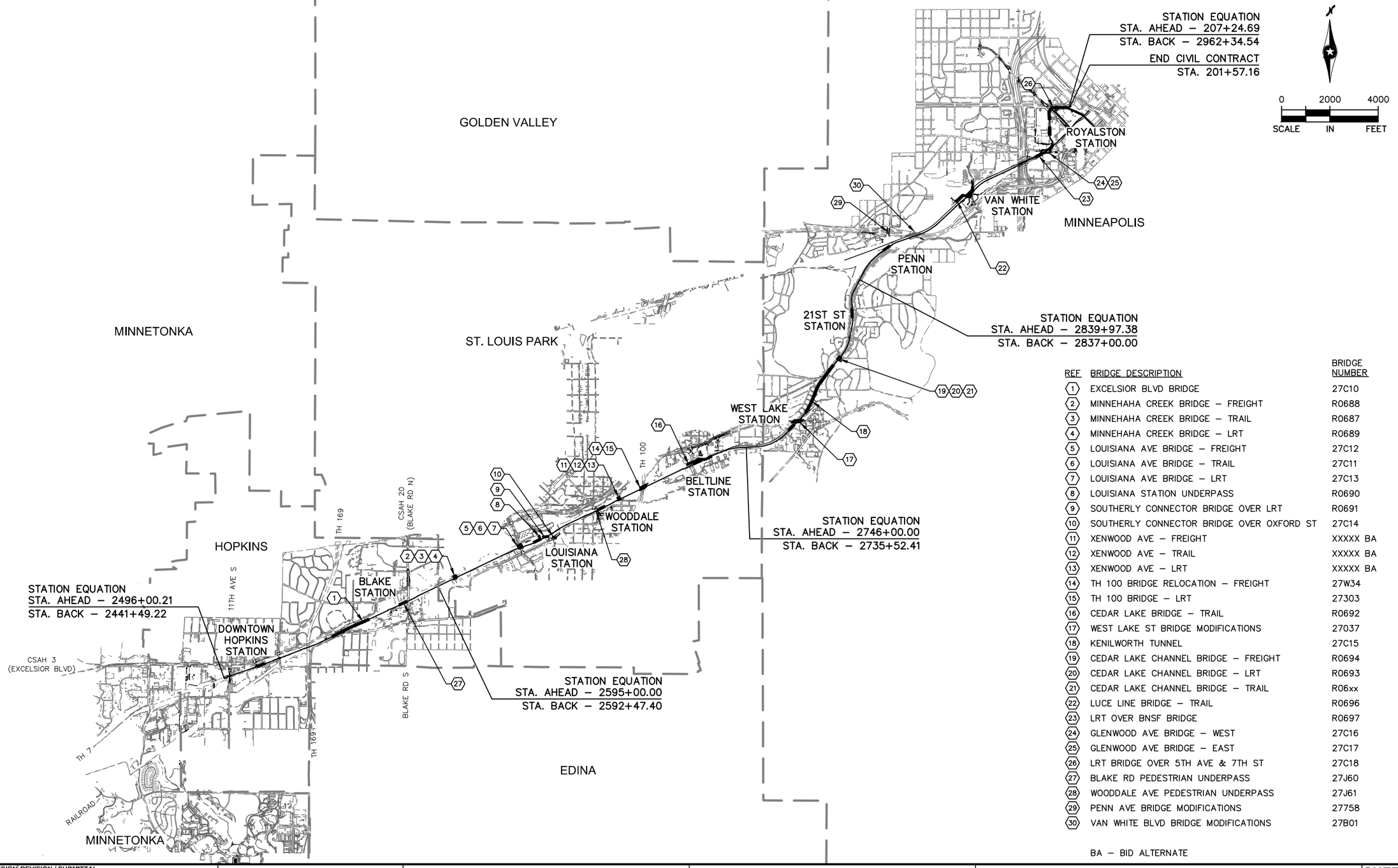

REF	BRIDGE DESCRIPTION	BRIDGE NUMBER
1	EXCELSIOR BLVD BRIDGE	27C10
2	MINNEHAHA CREEK BRIDGE – FREIGHT	R0688
3	MINNEHAHA CREEK BRIDGE – TRAIL	R0687
4	MINNEHAHA CREEK BRIDGE – LRT	R0689
5	LOUISIANA AVE BRIDGE – FREIGHT	27C12
6	LOUISIANA AVE BRIDGE – TRAIL	27C11
7	LOUISIANA AVE BRIDGE – LRT	27C13
8	LOUISIANA STATION UNDERPASS	R0690
9	SOUTHERLY CONNECTOR BRIDGE OVER LRT	R0691
10	SOUTHERLY CONNECTOR BRIDGE OVER OXFORD ST	27C14
11	XENWOOD AVE – FREIGHT	XXXXX BA
12	XENWOOD AVE – TRAIL	XXXXX BA
13	XENWOOD AVE – LRT	XXXXX BA
14	TH 100 BRIDGE RELOCATION – FREIGHT	27W34
15	TH 100 BRIDGE – LRT	27303
16	CEDAR LAKE BRIDGE – TRAIL	R0692
17	WEST LAKE ST BRIDGE MODIFICATIONS	27037
18	KENILWORTH TUNNEL	27C15
19	CEDAR LAKE CHANNEL BRIDGE – FREIGHT	R0694
20	CEDAR LAKE CHANNEL BRIDGE – LRT	R0693
21	CEDAR LAKE CHANNEL BRIDGE – TRAIL	R06xx
22	LUCE LINE BRIDGE – TRAIL	R0696
23	LRT OVER BNSF BRIDGE	R0697
24	GLENWOOD AVE BRIDGE – WEST	27C16
25	GLENWOOD AVE BRIDGE – EAST	27C17
26	LRT BRIDGE OVER 5TH AVE & 7TH ST	27C18
27	BLAKE RD PEDESTRIAN UNDERPASS	27J60
28	WOODDALE AVE PEDESTRIAN UNDERPASS	27J61
29	PENN AVE BRIDGE MODIFICATIONS	27758
30	VAN WHITE BLVD BRIDGE MODIFICATIONS	27B01

BA – BID ALTERNATE

NO.	DATE	BY	CHECK	DESIGN	REVISION / SUBMITTAL

AECOM

90% SUBMISSION - 01/22/16

METROPOLITAN COUNCIL

SOUTHWEST Green Line LRT Extension

CIVIL - VOLUME 4F
GENERAL
KEY MAP
SHEET 2

DISCIPLINE: GENERAL

SHEET NAME: E0-GEN-KEY-002

SHEET 5 OF 381

Jan, 21 2016 08:17 pm V:\3400_ADC\CAD\CAD MANAGEMENT\DRAWING LIST\COVER SHEETS 90%\E0-GEN-KEY.dwg By: v-kriewamr

SYMBOLS

- PROPOSED DIRECTIONAL LANE USE
- EXISTING DIRECTIONAL LANE USE
- FLASHER (FREIGHT & PEDESTRIAN)
- CROSSING GATE (FREIGHT & LRT)
- CANTILEVER SIGNAL
- RAIL TURNOUT
- RAIL CROSSOVER (DOUBLE)
- RAIL CROSSOVER (SINGLE)
- POINT OF SWITCH (PS)
- OCS POLE FOUNDATION
- RAIL LUBRICATOR
- POINT OF INTERSECTION (PI)
- W2–200 — RAILROAD CURVE NUMBER
- ACCESSIBLE PEDESTRIAN CURB RAMP (DESIGN VARIES)
- HANDICAP PARKING STALL
- TACTILE WARNING STRIP
- TPSS BUILDING (TPSS–SW###) – NIC
  TUNNEL SYSTEMS HOUSE (TSY–SW###) – NIC
- SIGNAL / COMMUNICATION HOUSE – NIC
- STORM SEWER MANHOLE
- STORM SEWER CATCH BASIN
- STORM SEWER FLARED END SECTION
- STORM SEWER CLEAN–OUT
- STORM SEWER PUMP STATION
- DTXX / INV XXX.XX — DRAINTILE ID
- XXXX – ST — STORM SEWER STRUCTURE ID
- C / E — BUS SHELTER
- ROADWAY / PEDESTRIAN LIGHT

LINETYPES

- ROADWAY ℄
- TRACK ℄ (LRT)
- TRACK ℄ (FRT)
- RETAINING WALL
- BALLAST CURB
- TUNNEL WALL
- FENCE
- EX ROW
- PROP ROW
- PROP TCE
- PROP PE
- FENCE / RAILING
- ID — ID — FREIGHT INTRUSION DETECTION
- CONCRETE CURB AND GUTTER
- TRAIL (WIDTH VARIES)
- SIDEWALK
- DRIVEWAY
- BRIDGE
- SAWCUT
- DELINEATED WETLAND
- BMP (NWL) WATER EDGE
- PROPOSED FLOODPLAIN MITIGATION AREA
- SILT FENCE
- BALE BARRIER
- STORM SEWER
- CASING PIPE
- PIPE REMOVAL
- STRUCTURE REMOVAL
- FLOATING SILT FENCE
- SUPER DUTY SILT FENCE
- CONSTRUCTION LIMITS
- ROCK WEEPER
- DIVERSION DITCH
- OVERLAND FLOW
- CROSSWALK
- STOP BAR
- MEDIAN NOSE
- EP-EP-18 — WETLAND ID

CONSTRUCTION PACKAGE NOTE

NOTE: THE SWLRT CONSTRUCTION IS BEING IMPLEMENTED THROUGH THREE MAIN CONSTRUCTION PACKAGES; CIVIL, SYSTEMS & TUNNEL FACILITIES (SYS), AND OPERATIONS & MAINTENANCE FACILITY (OMF). CERTAIN SYS AND OMF SYMBOLS ARE SHOWN ON THE CIVIL CONTRACT PLANS FOR INFORMATION ONLY AND CERTAIN FACILITIES ARE NOT PART OF THE CIVIL CONTRACT.

NO.	DATE	BY	CHECK	DESIGN	REVISION / SUBMITTAL

AECOM

90% SUBMISSION - 01/22/16

METROPOLITAN COUNCIL

SOUTHWEST Green Line LRT Extension

CIVIL - VOLUME 4F
GENERAL
NOTES, ABBREVIATIONS, AND SYMBOLS
SHEET 1

DISCIPLINE: GENERAL

SHEET NAME: 00-GEN-NTS-001

SHEET 6 OF 381

Jan, 21 2016 08:18 pm V:\3400_ADC\CAD\CAD MANAGEMENT\DRAWING LIST\COVER SHEETS 90%\CIV-GEN-NTS.dwg By: v-kriewamr

ABBREVIATIONS

3-2 (EG)	SIGNAL HEAD NUMBER (PHASE 3, NO. 2)
AD	ALGEBRAIC DIFFERENCE
AVE	AVENUE
AWF	ADVANCE WARNING FLASHER
BA	BID ALTERNATE
BGN	BEGIN
BP	BEGINNING POINT
BVCE	BEGINNING VERTICAL CURVE ELEVATION
BVCS	BEGINNING VERTICAL CURVE STATION
BLVD	BOULEVARD
BMP	BEST MANAGEMENT PRACTICE
BNSF	BURLINGTON NORTHERN SANTA FE RAILWAY
C&G	CURB AND GUTTER
℄	CENTERLINE
CB	CATCH BASIN
CE	CLEARANCE ENVELOPE
CIR	CIRCLE
CO	DRAINTILE CLEANOUT STRUCTURE
CP	CANADIAN PACIFIC
CPRAIL	CANADIAN PACIFIC RAILWAY
CS	CURVE TO SPIRAL
CSAH	COUNTY STATE AID HIGHWAY
D&U	DRAINAGE AND UTILITY
DF	DIRECT FIXATION
DR	DRIVE
DT	DRAINTILE
DTL	DETAIL
DWY	DRIVEWAY
E	EAST
Ea	ACTUAL SUPERELEVATION (INCHES)
EB	EAST BOUND
EL or ELEV	ELEVATION
EP	ENDING POINT
ESMT	EASEMENT
Eu	UNBALANCED SUPERELEVATION (INCHES)
EVCE	ENDING VERTICAL CURVE ELEVATION
EVCS	ENDING VERTICAL CURVE STATION
EVP	EMERGENCY VEHICLE PRE-EMPTION
EX	EXISTING
FES	FLARED END SECTION
FYA	FLASHING YELLOW ARROW
GR RD	GROUND ROD
GRN	GREEN INDICATION
HCRRA	HENNEPIN COUNTY REGIONAL RAILROAD AUTHORITY
INL	BRIDGE DRAIN INLET
INS GR	INSULATED GROUND
IP	INPLACE
LED	LIGHT EMITTING DIODE
LH	LEFT HAND
LN	LANE
LRCI	LOCALLY REQUESTED CAPITAL INVESTMENT
LRT	LIGHT RAIL TRANSIT
LRV	LIGHT RAIL VEHICLE
LT	LEFT
LUM	LUMINAIRE
L_c	CURVE LENGTH (FEET)
L_s	SPIRAL LENGTH (FEET)
MIN	MINIMUM
MPH	MILES PER HOUR
MPLS	CITY OF MINNEAPOLIS
MPRB	MINNEAPOLIS PARK AND RECREATION BOARD
N	NORTH
NB	NORTH BOUND
NIC	NOT IN CONTRACT
NO	NUMBER
NWL	NORMAL WATER LINE
OCS	OUTLET CONTROL SYSTEM
OCS	OVERHEAD CONTACT SYSTEM
OMF	OPERATIONS AND MAINTENANCE FACILITY
OH	OVERHEAD
P1-1 (EG)	PEDESTRIAN HEAD (PHASE 1, NO. 1)
PB2-1 (EG)	PUSHBUTTON (PHASE 2, NO. 1)
PC	POINT OF CURVE
PE	PERMANENT EASEMENT
PED	PEDESTRIAN
PITO	POINT OF INTERSECTION OF TURNOUT
PKWY	PARKWAY
POB	POINT OF BEGINNING
POE	POINT OF ENDING
POT	POINT ON TANGENT
PROP	PROPOSED
PS	POINT OF SWITCH
PT	POINT OF TANGENT
PVI	POINT OF VERTICAL INTERSECTION
R	RADIUS (FEET)
RCP	REINFORCED CONCRETE PIPE
RD	ROAD
RL	RAIL LUBRICATOR
r	RATE OF CHANGE VERTICAL CURVE
RH	RIGHT HAND
ROW	RIGHT OF WAY
RT	RIGHT
S	SOUTH
SB	SOUTH BOUND
SC	SPIRAL TO CURVE
SIG-COMM	SIGNAL COMMUNICATION
SOP	SOURCE OF POWER
ST	STREET
ST	SPIRAL TO TANGENT
ST	STORM MANHOLE STRUCTURE
STA	STATION
TCE	TEMPORARY CONSTRUCTION EASEMENT
TH	TRUNK HIGHWAY
THRU	THROUGH
TOR	TOP OF RAIL
TPSS	TRACTION POWER SUBSTATION
TRK	TRACK
TS	TANGENT TO SPIRAL
TYP	TYPICAL
UG	UNDERGROUND
V	DESIGN VELOCITY (MPH)
VC	VERTICAL CURVE
VDE	VEHICLE DYNAMIC ENVELOPE
W	WEST
WB	WEST BOUND
WLK	WALK INDICATION

TRAIL INDEX

ABBREVIATED NAME	FULL NAME / LOCATION
TRAIL 1	UNDER RED CIRCLE DR, LRT, AND YELLOW CIRCLE DR
TRAIL 2	FROM TRAIL 1 TO GREEN CIRCLE DR
TRAIL 3	OPUS STATION ACCESS FROM BREN RD E
TRAIL 4	FROM BREN RD W TO TRAIL 5
TRAIL 5	FROM OPUS STATION TO GREEN CIRCLE DR
TRAIL 6	FROM TRAIL 5 TO SMETANA RD
CEDAR LAKE TRAIL	CEDAR LAKE LRT REGIONAL TRAIL/FROM SHADY OAK STATION TO 11TH AVE
CEDAR LAKE TRAIL	CEDAR LAKE LRT REGIONAL TRAIL/WEST OF EXCELSIOR
CEDAR LAKE TRAIL	CEDAR LAKE LRT REGIONAL LRT TRAIL/BETWEEN EXCELSIOR AND KENILWORTH TRAIL CONNECTION
MIDTOWN GREENWAY	MIDTOWN GREENWAY/EAST OF KENILWORTH TRAIL CONNECTION
TRAIL A	KENILWORTH TRAIL (SECONDARY)/BETWEEN CEDAR-ISLES CHANNEL AND 21ST STREET STATION
TRAIL B	KENILWORTH TRAIL (SECONDARY)/BETWEEN 21ST STREET STATION AND PENN STATION
TRAIL B	CEDAR LAKE TRAIL (SECONDARY)/EAST OF PENN STATION
TRAIL C	10' CONNECTOR TRAIL FROM CEDAR LAKE LRT REGIONAL TRAIL TO TYLER AVE.
TRAIL D	10' CONNECTOR TRAIL/BELTLINE STATION TO CEDAR LAKE LRT REGIONAL TRAIL
KENILWORTH TRAIL	KENILWORTH TRAIL (MAIN)/W LAKE ST TO PENN STATION
CEDAR LAKE TRAIL	CEDAR LAKE TRAIL (MAIN)/PENN STATION TO TH 394
TRAIL E	KENILWORTH TRAIL (SECONDARY)/EAST OF W LAKE ST
TRAIL F	KENILWORTH TRAIL (SECONDARY)/WEST OF CEDAR LAKE PKWY
TRAIL G	NOT USED
TRAIL H	10' CONNECTOR TRAIL/EAST OF PENN STATION TO KENWOOD PKWY
TRAIL I	10' CONNECTOR TRAIL FROM CEDAR LAKE REGIONAL TRAIL TO CSAH 20 (BLAKE RD)
CEDAR LAKE TRAIL	CEDAR LAKE TRAIL (MAIN)/AT-GRADE CROSSING AT PENN STATION
TRAIL J	CEDAR LAKE TRAIL (SECONDARY)/NORTHWEST OF PENN STATION
TRAIL K	CEDAR LAKE TRAIL (SECONDARY)/NORTHWEST OF PENN STATION
TRAIL L	CEDAR LAKE TRAIL (SECONDARY)/EAST OF PENN STATION
TRAIL M	10' CONNECTOR TRAIL FROM CEDAR LAKE REGIONAL TRAIL TO CSAH 20 (BLAKE RD)
TRAIL N	8' CONNECTOR TRAIL FROM CEDAR LAKE TRAIL TO EDGEBROOOK DRIVE
TRAIL O	8' CONNECTOR TRAIL FROM CEDAR LAKE TRAIL TO W LAKE STREET
TRAIL P	8' CONNECTOR TRAIL FROM CEDAR LAKE TRAIL TO LOUISIANA AVE
TRAIL Q	10' CONNECTOR TRAIL FROM CEDAR LAKE TRAIL TO TH 7 SERVICE ROAD
TRAIL R	20' CONNECTOR TRAIL FROM VAN WHITE STATION TO CEDAR LAKE TRAIL
TRAIL S	10' CONNECTOR TRAIL FROM CEDAR LAKE REGIONAL TRAIL TO BELTLINE BLVD
TRAIL T	8' CONNECTOR TRAIL FROM VAN WHITE STATION TO VAN WHITE MEMORIAL BLVD
TRAIL U	10' TRAIL PARALLEL TO CEDAR LAKE PKWY
LUCE LINE TRAIL	LUCE LINE REGIONAL TRAIL/ON BRIDGE OVER LIGHT RAIL
TRAIL V	CONNECTOR TRAIL TO LUCE LINE REGIONAL TRAIL WEST OF LIGHT RAIL
TRAIL W	CONNECTOR TRAIL TO LUCE LINE REGIONAL TRAIL WEST OF LIGHT RAIL
TRAIL X	NOT USED
TRAIL Y	12' CONNECTOR TRAIL FROM CEDAR LAKE REGIONAL TRAIL TO WOODDALE AVE S
TRAIL Z	12' CONNECTOR TRAIL FROM CEDAR LAKE REGIONAL TRAIL TO WOODDALE AVE S
TRAIL AA	8' PEDESTRIAN CONNECTOR TRAIL FROM TRAIL B TO PENN STATION
TRAIL BB	8' PEDESTRIAN CONNECTOR TRAIL FROM TRAIL B TO PENN STATION
TRAIL CC	10' CONNECTOR TRAIL FROM KENILWORTH TRAIL (MAIN) TO PENN STATION

NO.	DATE	BY	CHECK	DESIGN	REVISION / SUBMITTAL

AECOM

90% SUBMISSION - 01/22/16

METROPOLITAN COUNCIL

SOUTHWEST Green Line LRT Extension

CIVIL - VOLUME 4F
GENERAL
NOTES, ABBREVIATIONS, AND SYMBOLS
SHEET 2

DISCIPLINE: GENERAL

SHEET NAME: 00-GEN-NTS-002

SHEET 7 OF 381

Jan, 21 2016 08:18 pm v:\3400_ADC\CAD\CAD MANAGEMENT\DRAWING LIST\COVER SHEETS 90%\CIV-GEN-NTS.dwg By: v-kriewamr

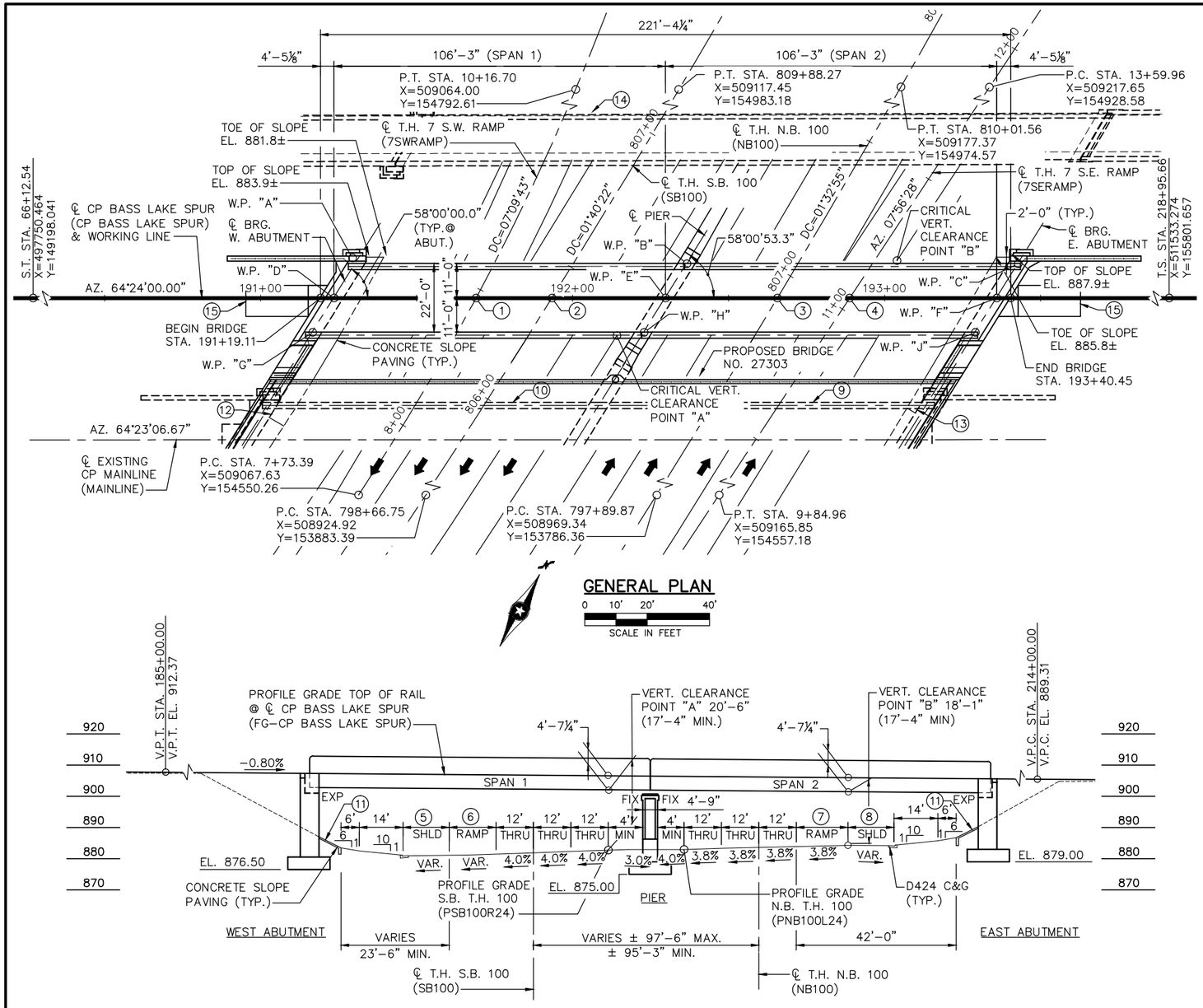

NOTES:

SEE BRIDGE SURVEY SHEET FOR INPLACE UTILITIES.

PIER AZIMUTH SET TO MATCH EXISTING BRIDGE NO. 27303 AT AZ 6°23'06.67".

ABUTMENT AZIMUTH SET TO A 32°00'00.0" SKEW TO ℄ CP BASS LAKE SPUR TO MATCH EXISTING BRIDGE NO. 27303 SKEW.

ALLOW FOR 2" FORMLINER IN THE ABUTMENT FACE AND WINGWALLS.

SEE SHEET NO. 61–68 FOR PROPOSED STAGING.

(1) ℄ CP BASS LAKE SPUR (CP BASS LAKE SPUR)
P.O.T. 191+69.04
℄ T.H. 7 S.W. RAMP (7SWRAMP) P.O.C. 8+46.98
X = 509074.32 Y = 154623.52
Δ = 61°48'50.0"

(2) ℄ CP BASS LAKE SPUR (CP BASS LAKE SPUR)
P.O.T 191+93.35
℄ T.H. S.B. 100 (SB100) P.O.C. 806+38.32
X = 509096.24 Y = 154634.03
Δ = 57°59'48.5"

(3) CONTROL POINT 1
℄ CP BASS LAKE SPUR (CP BASS LAKE SPUR)
P.O.T. 192+65.65
℄ T.H. N.B. 100 (NB100) P.O.C. 806+91.76
X = 509161.44 Y = 154665.27
Δ = 59°03'11.3"

(4) ℄ CP BASS LAKE SPUR (CP BASS LAKE SPUR)
P.O.T. 192+88.79
℄ T.H. 7 S.E. RAMP (7SERAMP) P.O.T. 11+04.19
X = 509182.32 Y = 154675.27
Δ = 56°27'31.6"

(5) VARIES FROM 6.00' @ ℄ T.H. S.B. 100 (SB100) STA. 804+95.58 TO 2.02' @ STA. 807+00.42. CROSS SLOPE VARIES FROM 4.0% @ STA. 805+42 TO 6.0% @ STA. 806+38.

(6) VARIES FROM 12.00' @ ℄ T.H. S.B. 100 (SB100) STA. 804+95.58 TO 26.64' @ STA. 807+00.42. CROSS SLOPE VARIES FROM 4.0% @ STA. 805+42 TO 6.0% @ STA. 806+38. VARYING CROSS SLOPE ONLY APPLIES TO THE 12.00' OF RAMP WIDTH ADJACENT TO THE SHOULDER. THE BALANCE ADJACENT TO THE THRU LANE IS 4.0%.

(7) VARIES FROM 12.00' PRIOR TO ℄ T.H. N.B. 100 (NB100) STA. 806+59.82 TO 20.00' @ STA. 808+01.83.

(8) VARIES FROM 10.00' PRIOR TO ℄ T.H. N.B. 100 (NB100) STA. 806+59.82 TO 2.00' @ STA. 808+01.83. CROSS SLOPE VARIES FROM 3.2% @ STA. 806+60 TO 2.0% @ STA. 807+18.

(9) EXISTING BRIDGE NO. 27303 SUPERSTRUCTURE TO BE RELOCATED TO BRIDGE NO. 27W34.

(10) EXISTING FIBER-OPTIC LINE ATTACHED TO THRU-PLATE GIRDER. RELOCATION OF UTILITY LINE TO BE COORDINATED PRIOR TO THE RELOCATION OF EXISTING BRIDGE NO. 27303 SUPERSTRUCTURE, AND CONSTRUCTION OF BRIDGE NO. 27W34 SUBSTRUCTURE.

(11) PROVIDE MAXIMUM SLOPE OF 2H:1V AT CONCRETE SLOPE PAVING AND ALONG NW AND NE WINGWALLS.

(12) REMOVE 10' OF CONCRETE SLOPE PAVING. TOE OF SLOPE EL. 882.4. TOP OF SLOPE EL. 885.1.

(13) REMOVE 10' OF CONCRETE SLOPE PAVING. TOE OF SLOPE EL. 885.6. TOP OF SLOPE EL. 887.0.

(14) EXISTING BRIDGE 27304.

(15) SEE TRACK PLANS FOR TRANSITION SLAB DETAILS.

DESIGN DATA

2014 AREMA MANUAL FOR RAILWAY ENGINEERING

SOUTHWEST LIGHT RAIL TRANSIT DESIGN CRITERIA (REVISION 4.0)

COOPER E90 LIVE LOAD OR 100 KIP (4 AXLES) ALTERNATE LOAD WITH DIESEL IMPACT

MAXIMUM BALLAST DEPTH = 2'-0" (FOR DESIGN)

WORKING STRESS DESIGN METHOD (STEEL)

LOAD FACTOR DESIGN METHOD (CONCRETE)

MAXIMUM ALLOWABLE DESIGN STRESSES
REINFORCED CONCRETE:
f'c = 4.5 KSI n = 8
fy = 60 KSI REINFORCEMENT

STRUCTURAL STEEL: (THRU-PLATE GIRDER)
fs = 27.5 KSI, fy = 50 KSI
ASTM A709 GRADE 50WT3 & GRADE 50WF3
(MN/DOT 3309)

PROJECTED TRAFFIC VOLUMES:
2034 A.D.T. ROADWAY UNDER – 125,000
2034 D.H.V. ROADWAY UNDER – 111,000
2034 A.D.T.T. ROADWAY UNDER – 3,900

DESIGN SPEED OVER = 25 MPH
DESIGN SPEED UNDER = 60 MPH

DECK AREA = 4870 SQ. FT.

LIST OF SHEETS

NO.	DESCRIPTION
1	GENERAL PLAN AND ELEVATION
2	TRANSVERSE SECTION AND QUANTITIES
3	BRIDGE LAYOUT
4–7	WEST ABUTMENT DETAILS
8–14	WEST ABUTMENT REINFORCEMENT
15–18	EAST ABUTMENT DETAILS
19–25	EAST ABUTMENT REINFORCEMENT
26–29	PIER DETAILS & REINFORCEMENT
30	FRAMING PLAN
31	BALLAST PLATE REMOVAL PLAN
32	CORNER DETAILS
33–48	SUPERSTRUCTURE DETAILS
49–50	RAILING DETAILS
51–52	DECK DRAINAGE AND WATERPROOFING
53	CONCRETE SLOPE PAVING
54	BRIDGE DETAILS
55	AS-BUILT BRIDGE DATA
56	BRIDGE SURVEY
57	BRIDGE SURVEY PLAN
58–60	BRIDGE SURVEY PROFILE
61–68	STAGING PLANS

BRIDGE NO. 27W34

CP RAILWAY OVER T.H. 100
0.2 MILES SOUTH OF JCT. T.H. 7 IN ST. LOUIS PARK

106'–106' STEEL GIRDER THRU GIRDER SPANS
58°–00'–00" SKEW

CP RAILWAY MILEPOST 429.00
ON THE MERRIAM PARK SUBDIVSION

BRIDGE ID NO. 305

GENERAL PLAN AND ELEVATION

SEC 6 T 28N R 24W
CITY OF ST. LOUIS PARK HENNEPIN COUNTY

APPROVED: _____ DRAFT-WORK IN PROCESS
STATE BRIDGE ENGINEER DATE

JOB NO.: T9N635 | STATE PROJ. NO.: 9909–01 | MNDOT REVIEW: JOE NIETFELD

NO.	DATE	BY	CHECK	DESIGN	REVISION / SUBMITTAL

DESIGNED BY: KAE CHECKED BY: MDJ
DRAWN BY: LMT CHECKED BY: MDJ

AECOM Kimley»Horn

90% SUBMISSION - 01/22/16

METROPOLITAN COUNCIL

SOUTHWEST Green Line LRT Extension

CIVIL - VOLUME 4
TH 100 FREIGHT RAIL BRIDGE
BRIDGE 27W34
GENERAL PLAN AND ELEVATION

DISCIPLINE: STRUCTURES
SHEET NAME: CBR27W34-BRG-GPE

SHEET 1 OF 68

Dec, 11 2015 11:17 am V:\3400_ADC\CAD\SEGMENT E2\PLAN SHEETS\STRUCTURES\T100-FRT\CBR27W34-BRG-GPE.dwg By: Katie.Ellis

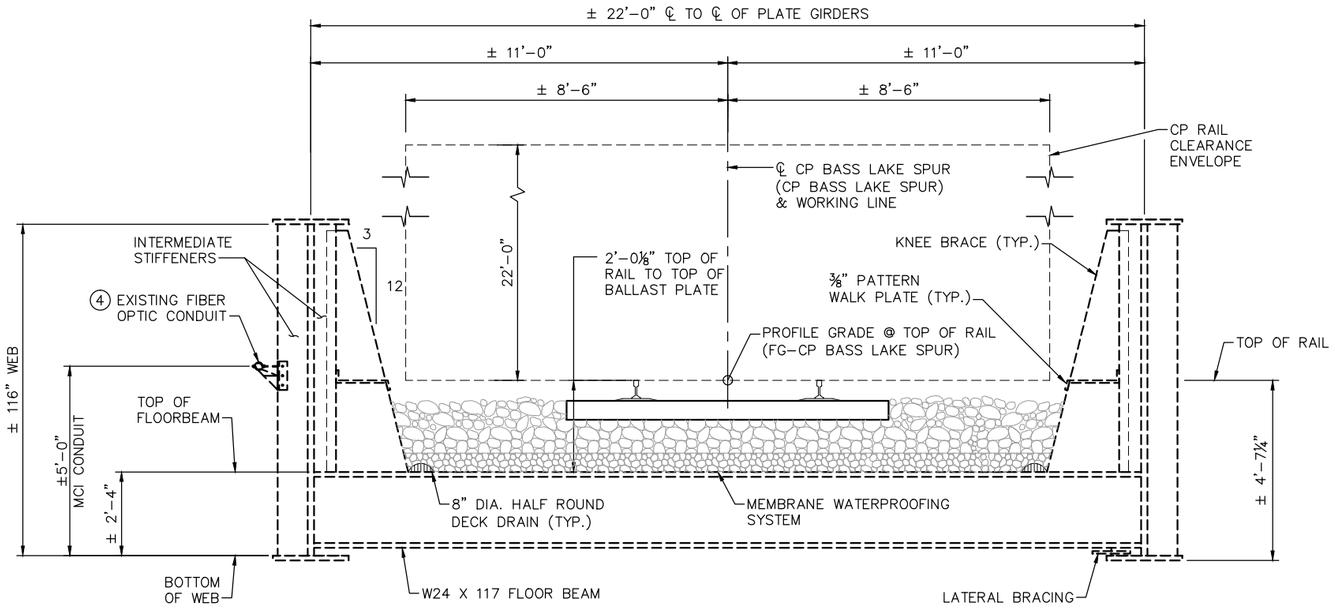

TRANSVERSE SECTION

0 1' 2' 4'

SCALE IN FEET

CONSTRUCTION NOTES:

THE 2016 EDITION OF THE MINNESOTA DEPARTMENT OF TRANSPORTATION "STANDARD SPECIFICATIONS FOR CONSTRUCTION" SHALL GOVERN.

BRIDGE SEAT REINFORCEMENT SHALL BE CAREFULLY PLACED TO AVOID INTERFERENCE WITH DRILLING HOLES FOR ANCHOR RODS. THE BEAMS SHALL BE ERECTED IN FINAL POSITION PRIOR TO DRILLING HOLES FOR AND PLACING ANCHOR RODS.

THE BAR SIZES SHOWN IN THIS PLAN ARE IN U.S. CUSTOMARY DESIGNATIONS. THE FIRST DIGIT OR THE FIRST TWO DIGITS OF EACH BAR MARK INDICATE THE BAR SIZE.

BARS MARKED WITH THE SUFFIX "E" SHALL BE EPOXY COATED IN ACCORDANCE WITH SPEC. 3301.

THE SUBSURFACE UTILITY INFORMATION IN THIS PLAN IS UTILITY QUALITY LEVEL D. THIS UTILITY QUALITY LEVEL WAS DETERMINED ACCORDING TO THE GUIDELINES OF CI/ASCE 38-02, ENTITLED "STANDARD GUIDELINES FOR THE COLLECTION AND DEPICTION OF EXISTING SUBSURFACE UTILITY DATA".

CONCRETE MATERIALS, MIX DESIGN, TESTING AND CONSTRUCTION SHALL BE IN ACCORDANCE WITH CHAPTER 8, PART 1 OF THE 2014 AREMA MANUAL; MnDOT 2461 AND THE SPECIAL PROVISIONS.

CONCRETE SHALL BE MADE WITH A LOW ALKALI NORMAL PORTLAND CEMENT (TYPE I OR TYPE I/II) IN ACCORDANCE WITH ASTM C 150, LATEST EDITION, WITH LESS THAN 0.6% SODIUM EQUIVALENTS.

MAXIMUM CONCRETE WATER/CEMENT RATIO SHALL BE IN ACCORDANCE WITH CHAPTER 8, SECTION 1.11 OF THE 2014 AREMA MANUAL AND MnDOT 2461.

SCHEDULE OF QUANTITIES

SPEC. SECTION	ITEM	UNIT	QUANTITY
2105	CONSTRUCT BRIDGE 27W34	LUMP SUM	LS

COMPONTENT ITEM SUMMARY (BRIDGE 27W34)

SPEC. SECTION ③	ITEM	UNIT ②	QUANTITY ②
SB-XX	RAILROAD TRACK BALLAST (CV)	CU. YD.	276
2401	STRUCTURAL CONCRETE (1G52)	CU. YD.	407
2401	STRUCTURAL CONCRETE (3B52)	CU. YD.	660
2401	REINFORCEMENT BARS	POUND	68020
2401	REINFORCEMENT BARS (EPOXY COATED)	POUND	83530
SB-XX	STRUCTURE EXCAVATION	LUMP SUM	1
2402	ORNAMENTAL METAL RAILING TYPE SPECIAL	LIN. FT.	77
SB-XX	RELOCATE SUPERSTRUCTURE	EACH	1
SB-XX	RELOCATE BEARING ASSEMBLY	EACH	12
SB-XX	ANTI-GRAFFITI COATING	SQ. FT.	1169
SB-XX	ARCH CONC TEXTURE (ASHLAR STONE)	SQ. FT.	1169
SB-XX	ARCH SURFACE FINISH (MULTICOLOR)	SQ. FT.	1169
2442	REMOVE EXISTING BRIDGE	LUMP SUM	1
SB-XX	STEEL SHEET PILING (TEMPORARY)	LUMP SUM	1
2481	DAMPROOFING	SQ. FT.	2952
2481	WATERPROOFING	SQ. FT.	516
SB-XX	DRAINAGE SYSTEM (ABUTMENTS)	LUMP SUM	1
2502	DRAINAGE SYSTEM (B910)	LUMP SUM	1
2545	CONDUIT SYSTEM (LIGHTING)	LUMP SUM	1

NOTES:

1. A BENCHMARK IS REQUIRED, LOCATED AT THE SOUTHEAST CORNER OF THE BRIDGE. STATE WILL FURNISH DISK. BEND PRONGS OUTWARD TO ANCHOR DISK TO CONCRETE. BOTTOM OF DISK TOP TO BE PLACED FLUSH WITH CONCRETE.

② QUANTITIES LISTED FOR THE COMPONENT ITEMS OF THE LUMP SUM BR 27W34 ITEM ARE FOR INFORMATION PURPOSES. ANY ADDITIONAL ITEMS OR CHANGES IN QUANTITIES REQUIRED SHALL BE PROVIDED BY THE CONTRACTOR WITH NO ADDITIONAL COMPENSATION.

③ MEASUREMENT AND PAYMENT FOR COMPONENT ITEMS SHALL BE PART OF THE LUMP SUM PAYMENT FOR BR 27W34. REFER TO MNDOT STANDARD SPECIFICATION OR SPECIAL PROVISION FOR TECHNICAL SPECIFICATION REQUIREMENTS FOR ALL PROVISION OTHER THAN MEASUREMENT AND PAYMENT REQUIREMENTS.

④ EXISTING FIBER-OPTIC LINE ATTACHED TO THRU-PLATE GIRDER. RELOCATION OF UTILITY LINE TO BE COORDINATED PRIOR TO THE RELOCATION OF EXISTING BRIDGE NO. 27303 SUPERSTRUCTURE, AND CONSTRUCTION OF BRIDGE NO. 27W34 SUBSTRUCTURE.

EXISTING BRIDGE 27303 SUPERSTRUCTURE TO BE RELOCATED TO NEW ALIGNMENT, AND RENUMBERED TO BRIDGE NO. 27W34. DIMENSIONS ARE BASED ON CONSTRUCTION PLANS FOR S.P. NO. 2734-27303.

SEE SHEETS 61-68 FOR STAGING PLANS.

DRAFT-WORK IN PROCESS

NO.	DATE	BY	CHECK	DESIGN	REVISION / SUBMITTAL

DESIGNED BY: KAE CHECKED BY: MDJ

DRAWN BY: LMT CHECKED BY: MDJ

AECOM Kimley»Horn

90% SUBMISSION - 01/22/16

METROPOLITAN COUNCIL

SOUTHWEST Green Line LRT Extension

CIVIL - VOLUME 4F
TH 100 FREIGHT RAIL BRIDGE
BRIDGE 27W34
TRANSVERSE SECTION AND QUANTITIES

DISCIPLINE: STRUCTURES

SHEET NAME: CBR27W34-BRG-TRN

SHEET 2 OF 68

Dec, 11 2015 11:17 am V:\3400_ADC\CAD\SEGMENT E2\PLAN SHEETS\STRUCTURES\T100-FRT\CBR27W34-BRG-TRN.dwg By: Katie.Ellis

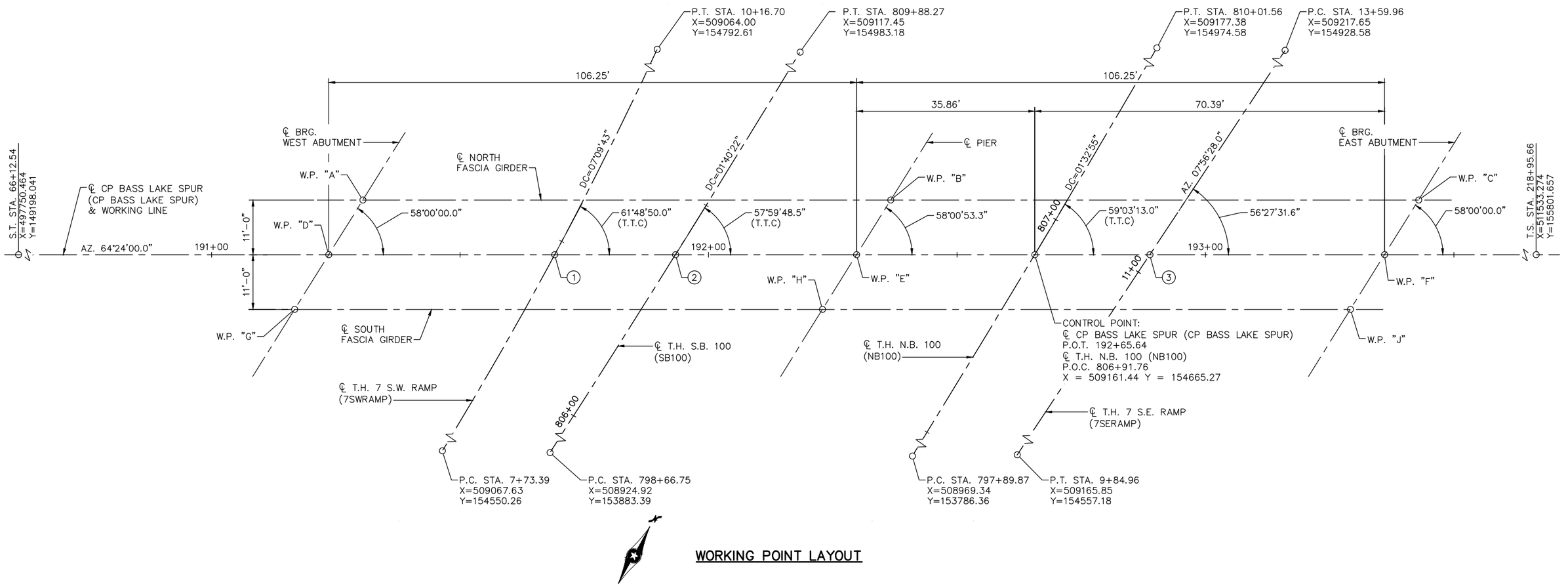

WORKING POINT LAYOUT

DIMENSIONS BETWEEN WORKING POINTS											COORDINATES		ELEVATION				
POINT	STATION	A	B	C	D	E	F	G	H	J	X	Y	TOP OF RAIL	TOP OF BALLAST PLATE	TOP OF BALLAST PLATE TO BR. SEAT	BRIDGE SEAT	POINT
A	191+30.40		106.25		12.97	99.99			95.09	199.97	509034.72	154616.75	907.36	905.35	3.35	902.00	A
B	192+36.65			106.25		12.97	99.98	121.99		95.09	509130.54	154662.66	906.51	904.50	3.43	901.07	B
C	193+42.90						12.97	227.31	121.99		509226.36	154708.57	905.67	903.66	3.35	900.31	C
D	191+23.53					106.25		12.97	99.98		509033.28	154603.86	907.41	905.40	2.73	902.67	D
E	192+29.78						106.25		12.97	99.99	509129.10	154649.77	906.57	904.56	2.73	901.83	E
F	193+36.03									12.97	509224.91	154695.68	905.72	903.71	2.73	900.98	F
G	191+16.66								106.25		509031.83	154590.97	907.47	905.46	3.35	902.11	G
H	192+22.91									106.25	509127.65	154636.88	906.62	904.61	3.43	901.18	H
J	193+29.16										509223.47	154682.79	905.78	903.77	3.35	900.42	J

NOTES:

1. ℄ CP BASS LAKE SPUR (CP BASS LAKE SPUR) P.O.T. 191+69.04
   ℄ T.H. 7 S.W. RAMP (7SWRAMP) P.O.C. 8+46.98
   X = 509074.32 Y = 154623.52
2. ℄ CP BASS LAKE SPUR (CP BASS LAKE SPUR) P.O.T 191+93.35
   ℄ T.H. S.B. 100 (SB100) P.O.C. 806+38.32
   X = 509096.24 Y = 154634.03
3. ℄ CP BASS LAKE SPUR (CP BASS LAKE SPUR) P.O.T. 192+88.79
   ℄ T.H. 7 S.E. RAMP (7SERAMP) P.O.T. 11+04.19
   X = 509182.32 Y = 154675.27

DRAFT-WORK IN PROCESS

NO.	DATE	BY	CHECK	DESIGN	REVISION / SUBMITTAL

DESIGNED BY: KAE CHECKED BY: MDJ
DRAWN BY: LMT CHECKED BY: MDJ

AECOM Kimley»Horn

90% SUBMISSION - 01/22/16

METROPOLITAN COUNCIL

SOUTHWEST Green Line LRT Extension

CIVIL - VOLUME 4F
TH 100 FREIGHT RAIL BRIDGE
BRIDGE 27W34
BRIDGE LAYOUT

DISCIPLINE: STRUCTURES
SHEET NAME: CBR27W34-BRG-SUP-001

SHEET 3 OF 68

Dec, 11 2015 11:18 am V:\3400_ADC\CAD\SEGMENT E2\PLAN SHEETS\STRUCTURES\T100-FRT\CBR27W34-BRG-SUP-001.dwg By: Katie.Ellis

WEST ABUTMENT SPREAD FOOTING LOAD DATA	
* ALLOWABLE DESIGN BEARING PRESSURE	3.2 TONS/ SQ FT
EFFECTIVE WIDTH B'	26.8 FT
ALLOWABLE BEARING RESISTANCE $\phi b\, q_n$	3.7 TONS/ SQ FT

* BASED ON AREMA SERVICE III LOAD COMBINATION.

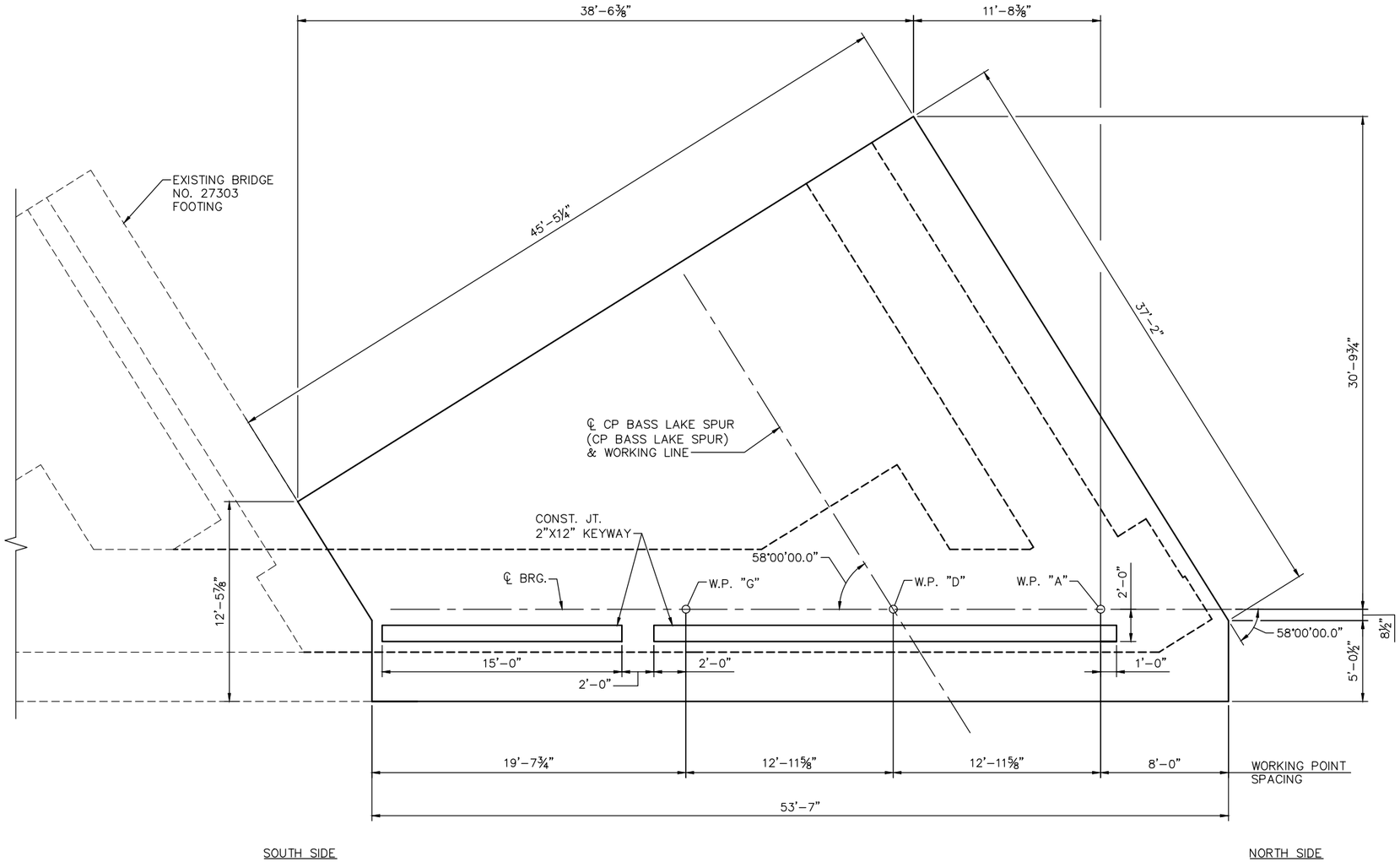

FOOTING PLAN

DRAFT-WORK IN PROCESS

NO.	DATE	BY	CHECK	DESIGN	REVISION / SUBMITTAL

DESIGNED BY: KAE CHECKED BY: MDJ
DRAWN BY: LMT CHECKED BY: MDJ

AECOM Kimley»Horn

90% SUBMISSION - 01/22/16

METROPOLITAN COUNCIL

SOUTHWEST Green Line LRT Extension

CIVIL - VOLUME 4F
TH 100 FREIGHT RAIL BRIDGE
BRIDGE 27W34
WEST ABUTMENT DETAILS 1

SHEET 4 OF 68

DISCIPLINE: STRUCTURES

SHEET NAME: CBR27W34-BRG-ABT-001-1

Dec, 11 2015 11:18 am V:\3400_ADC\CAD\SEGMENT E2\PLAN SHEETS\STRUCTURES\T100-FRT\CBR27W34-BRG-ABT-001.dwg By: Katie.Ellis

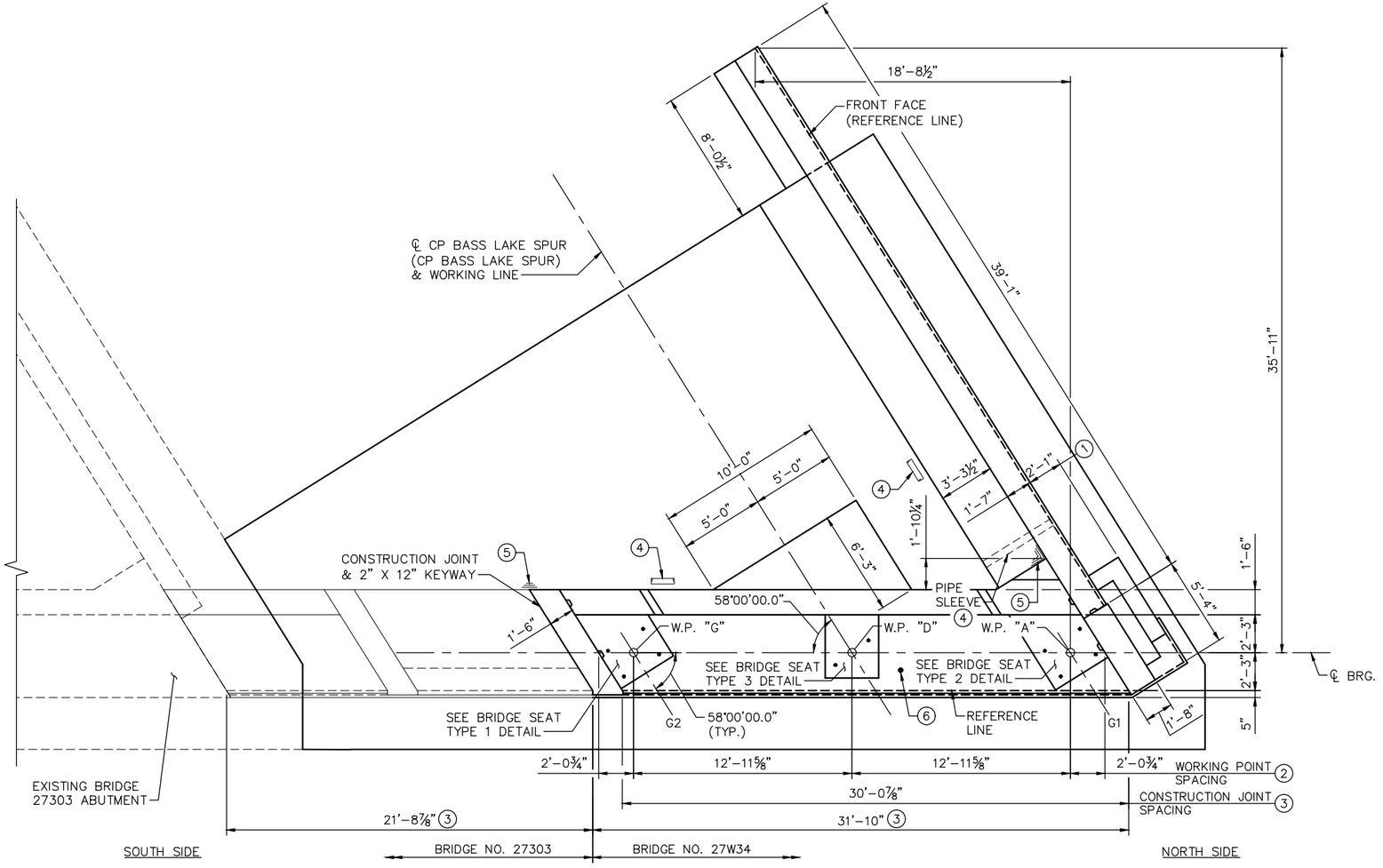

PLAN

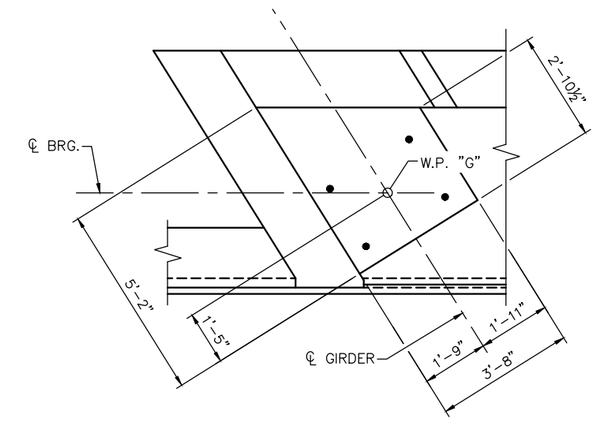

BRIDGE SEAT TYPE 1

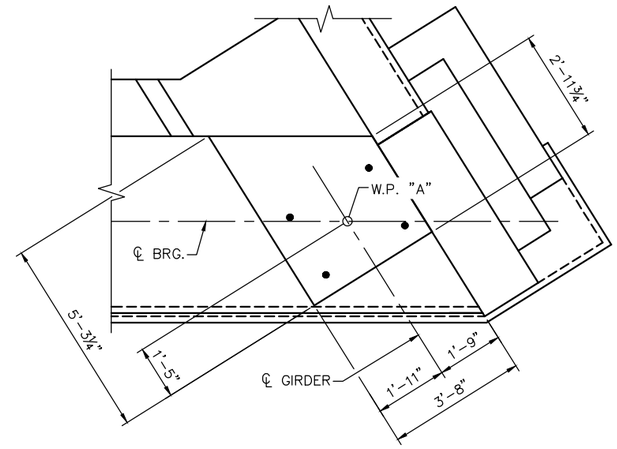

BRIDGE SEAT TYPE 2

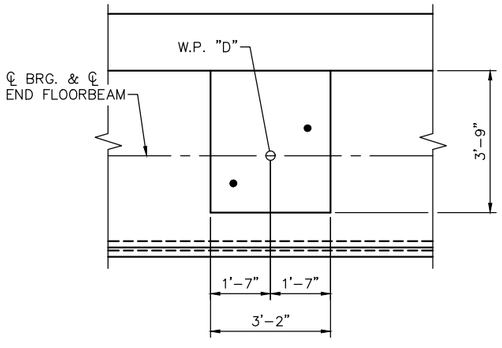

BRIDGE SEAT TYPE 3

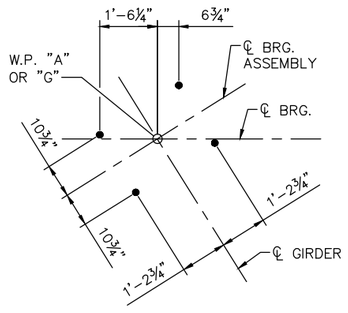

ANCHOR ROD LAYOUT
(BEARING E1)

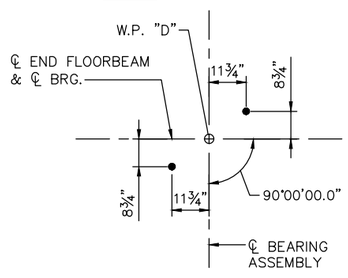

ANCHOR ROD LAYOUT
(BEARING E2)

NOTES:

A 72 HOUR DELAY IS REQUIRED BETWEEN ALL ADJACENT POURS OF WALLS AND STEMS.

DAMPROOFING SHALL BE APPLIED TO THE BACK FACE OF THE ABUTMENT, THE NORTHWEST WINGWALL FROM TOP OF FOOTING TO WITHIN 6" FROM TOP OF ABUTMENT/WINGWALL. .

(1) DIMENSIONS SHOWN AT TOP OF WALL.

(2) MEASURED ALONG ℄ BEARING.

(3) MEASURED ALONG REFERENCE LINE.

(4) DRAINAGE SYSTEM. SEE DETAIL B910.

(5) MEMBRANE WATERPROOFING SYSTEM PER MnDOT SPEC. 2481.3B.

(6) 1" DIA. R.S.C CONDUIT SYSTEM (LIGHTING)

DRAFT-WORK IN PROCESS

NO.	DATE	BY	CHECK	DESIGN	REVISION / SUBMITTAL

DESIGNED BY: KAE CHECKED BY: MDJ
DRAWN BY: LMT CHECKED BY: MDJ

AECOM Kimley»Horn

90% SUBMISSION - 01/22/16

METROPOLITAN COUNCIL

SOUTHWEST Green Line LRT Extension

CIVIL - VOLUME 4F
TH 100 FREIGHT RAIL BRIDGE
BRIDGE 27W34
WEST ABUTMENT DETAILS 2

DISCIPLINE: STRUCTURES
SHEET NAME: CBR27W34-BRG-ABT-001-2

SHEET 5 OF 68

Dec, 11 2015 11:18 am V:\3400_ADC\CAD\SEGMENT E2\PLAN SHEETS\STRUCTURES\T100-FRT\CBR27W34-BRG-ABT-001.dwg By: Katie.Ellis

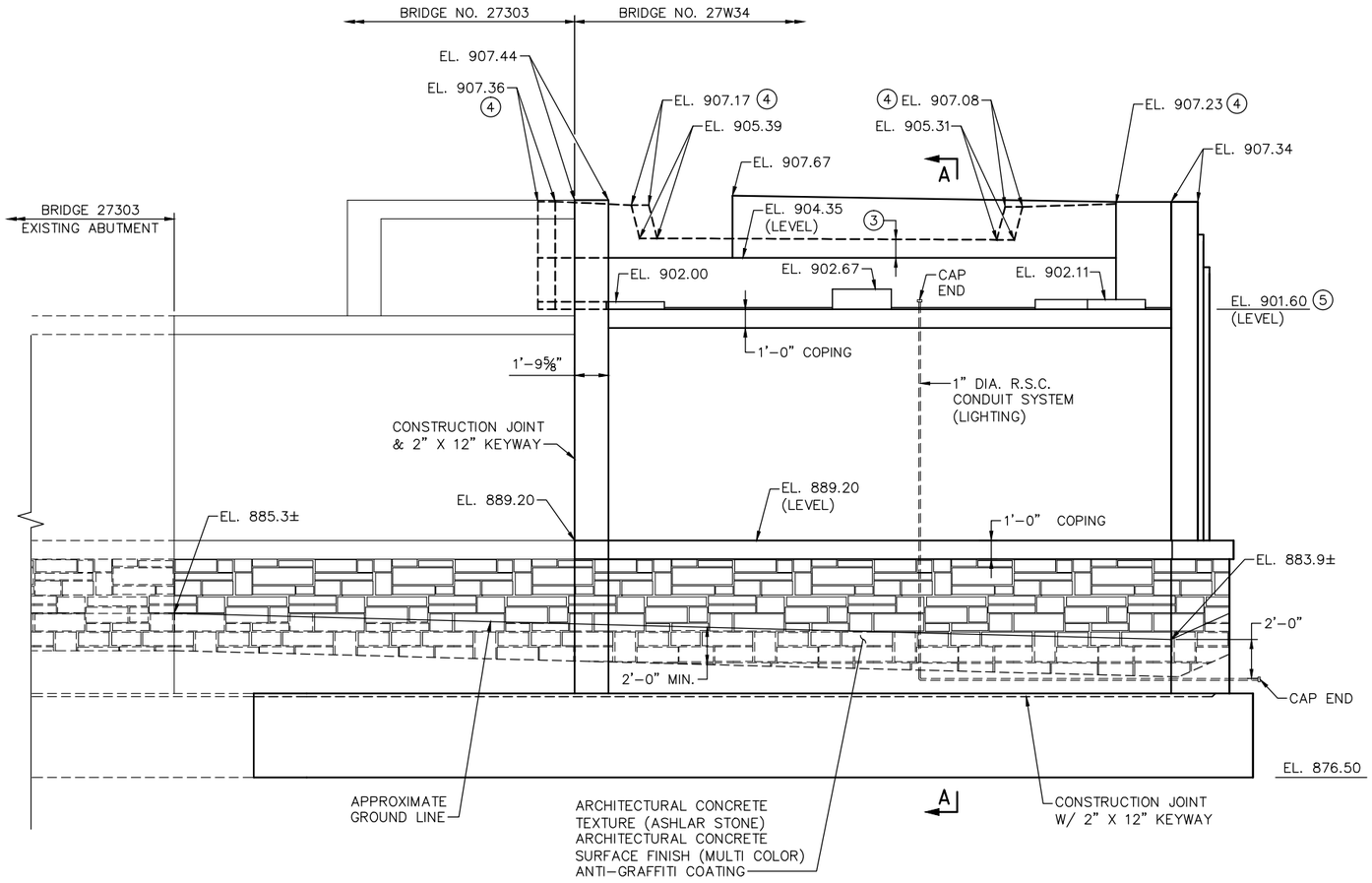

ELEVATION

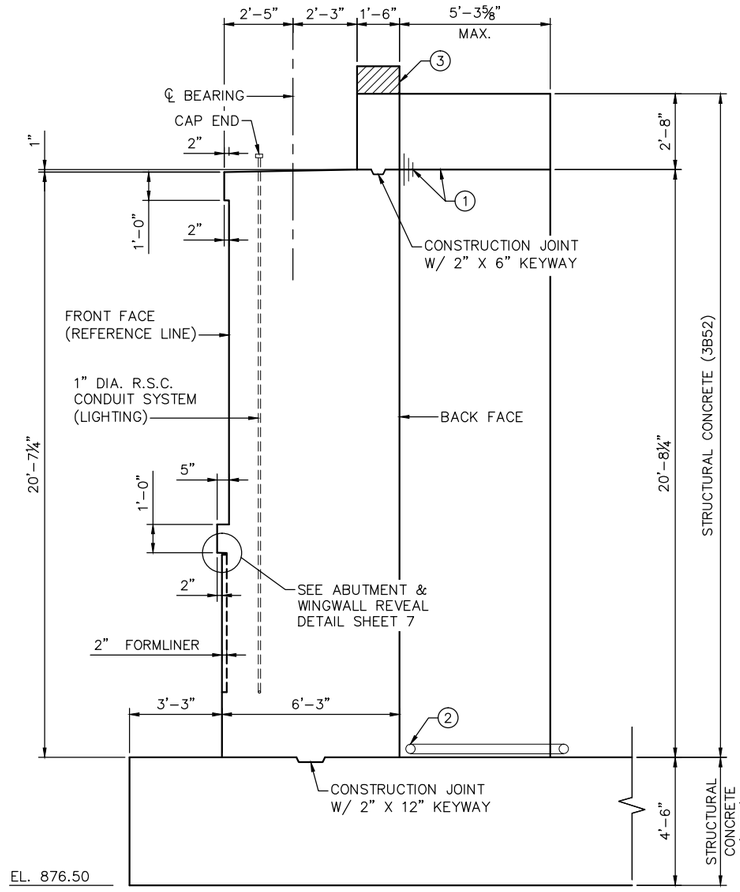

SECTION A–A
(SECTION THRU ABUTMENT)

NOTES:

1. (1) MEMBRANE WATERPROOFING SYSTEM PER MnDOT SPEC. 2481.3B.
2. (2) 4" NOMINAL DIA. PERFORATED PIPE, SEE DETAIL B910.
3. (3) CONCRETE TO BE POURED AFTER BACKWALL PROTECTION ANGLES HAVE BEEN INSTALLED (SEE WATERPROOFING AND DRAINAGE DETAILS).
4. (4) ELEVATIONS SHOWN AT BOTTOM OF WALK PLATE.
5. (5) ELEVATION AT ABUTMENT FRONT FACE.
6. CONTRACTOR TO COORDINATE INFILL WALL & ASSOCIATED ORNAMENTAL RAILING CONSTRUCTION WITH 37W34 SUPERSTRUCTURE RELOCATION.

DRAFT-WORK IN PROCESS

NO.	DATE	BY	CHECK	DESIGN	REVISION / SUBMITTAL

DESIGNED BY: KAE CHECKED BY: MDJ
DRAWN BY: LMT CHECKED BY: MDJ

AECOM Kimley»Horn

90% SUBMISSION - 01/22/16

METROPOLITAN COUNCIL

SOUTHWEST Green Line LRT Extension

CIVIL - VOLUME 4F
TH 100 FREIGHT RAIL BRIDGE
BRIDGE 27W34
WEST ABUTMENT DETAILS 3

DISCIPLINE: STRUCTURES
SHEET NAME: CBR27W34-BRG-ABT-001-3

SHEET 6 OF 68

Dec. 11 2015 11:18 am V:\3400_ADC\CAD\SEGMENT E2\PLAN SHEETS\STRUCTURES\T100-FRT\CBR27W34-BRG-ABT-001.dwg By: Katie.Ellis

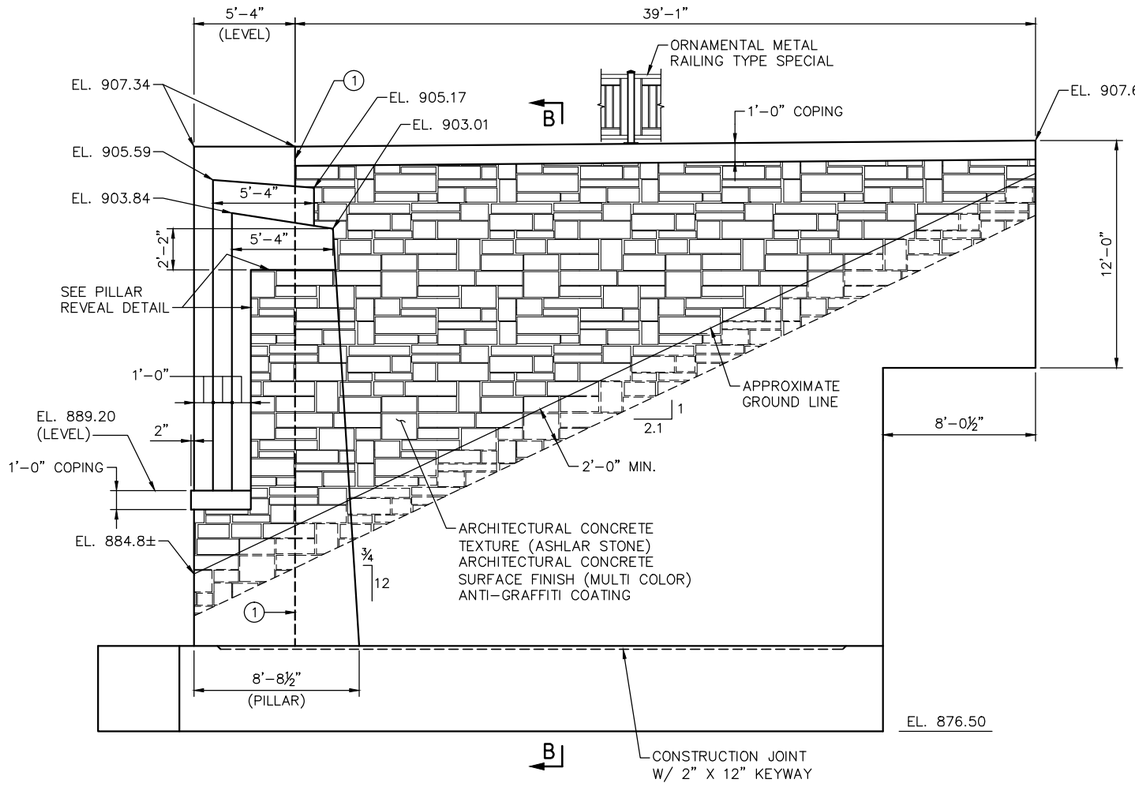

N.W. WINGWALL ELEVATION

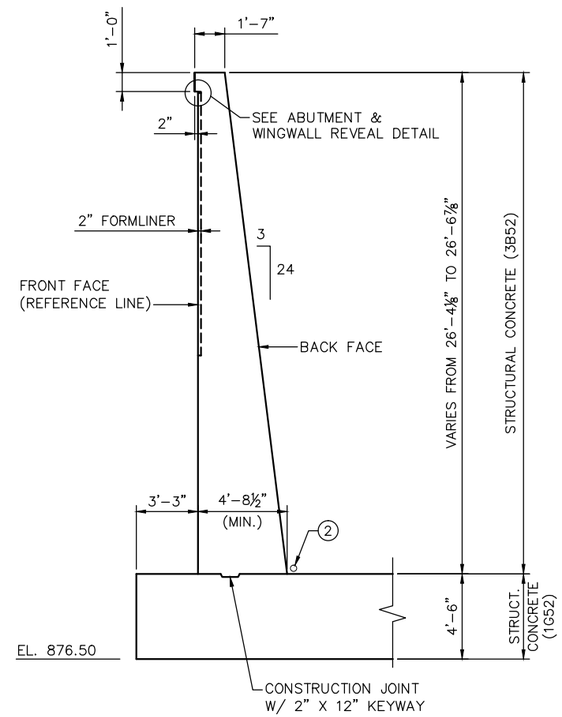

SECTION B-B
(SECTION THRU WINGWALL)

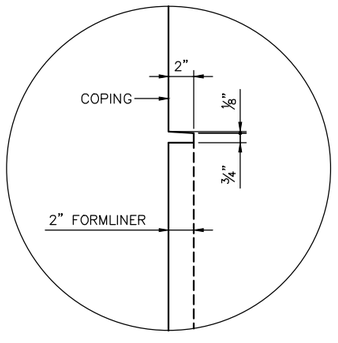

PILLAR REVEAL DETAIL

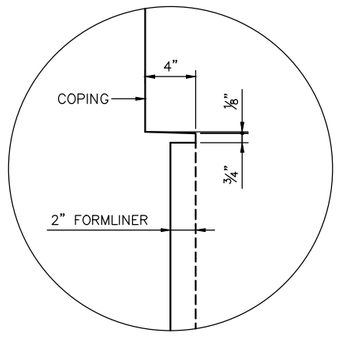

ABUTMENT & WINGWALL REVEAL DETAIL

NOTES:

1. CONSTRUCTION JOINT W/ 2" X 6" KEYWAY.
2. 4" NOMINAL DIA. PERFORATED PIPE, SEE DETAIL B910.

DRAFT-WORK IN PROCESS

NO.	DATE	BY	CHECK	DESIGN	REVISION / SUBMITTAL

DESIGNED BY: KAE | CHECKED BY: MDJ
DRAWN BY: LMT | CHECKED BY: MDJ

AECOM Kimley»Horn

90% SUBMISSION - 01/22/16

METROPOLITAN COUNCIL

SOUTHWEST Green Line LRT Extension

CIVIL - VOLUME 4F
TH 100 FREIGHT RAIL BRIDGE
BRIDGE 27W34
WEST ABUTMENT DETAILS 4

DISCIPLINE: STRUCTURES
SHEET NAME: CBR27W34-BRG-ABT-001-4

SHEET 7 OF 68

Dec, 11 2015 11:18 am V:\3400_ADC\CAD\SEGMENT E2\PLAN SHEETS\STRUCTURES\T100-FRT\CBR27W34-BRG-ABT-001.dwg By: Katie.Ellis

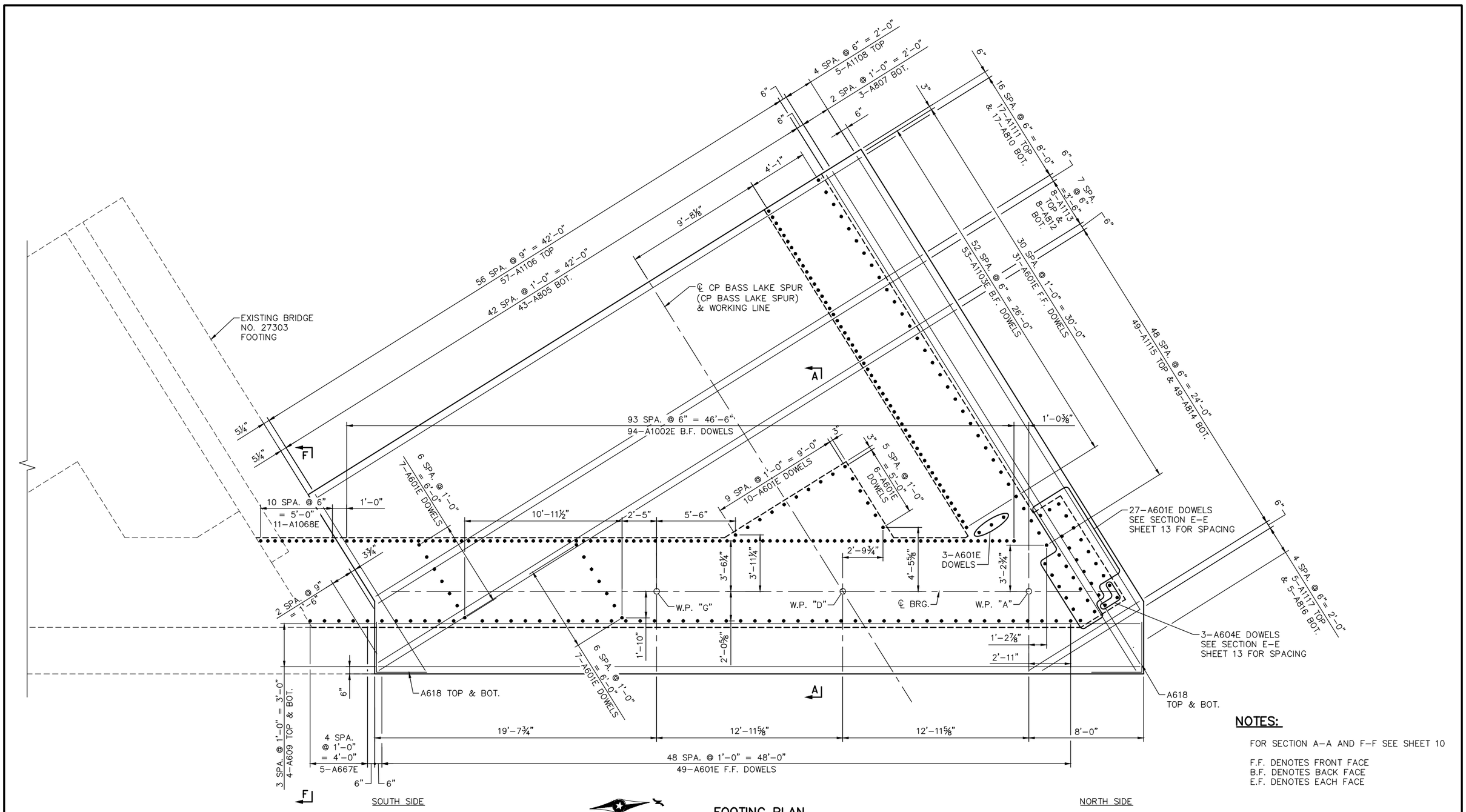

FOOTING PLAN

NOTES:

FOR SECTION A-A AND F-F SEE SHEET 10

F.F. DENOTES FRONT FACE
B.F. DENOTES BACK FACE
E.F. DENOTES EACH FACE

DRAFT-WORK IN PROCESS

NO.	DATE	BY	CHECK	DESIGN	REVISION / SUBMITTAL

DESIGNED BY: KAE | CHECKED BY: MDJ
DRAWN BY: LMT | CHECKED BY: MDJ

AECOM Kimley»Horn

90% SUBMISSION - 01/22/16

METROPOLITAN COUNCIL

SOUTHWEST Green Line LRT Extension

CIVIL - VOLUME 4F
TH 100 FREIGHT RAIL BRIDGE
BRIDGE 27W34
WEST ABUTMENT REINFORCEMENT 1

DISCIPLINE: STRUCTURES
SHEET NAME: CBR27W34-BRG-ABT-001-5

SHEET 8 OF 68

Dec, 11 2015 11:18 am V:\3400_ADC\CAD\SEGMENT E2\PLAN SHEETS\STRUCTURES\T100-FRT\CBR27W34-BRG-ABT-001.dwg By: Katie.Ellis

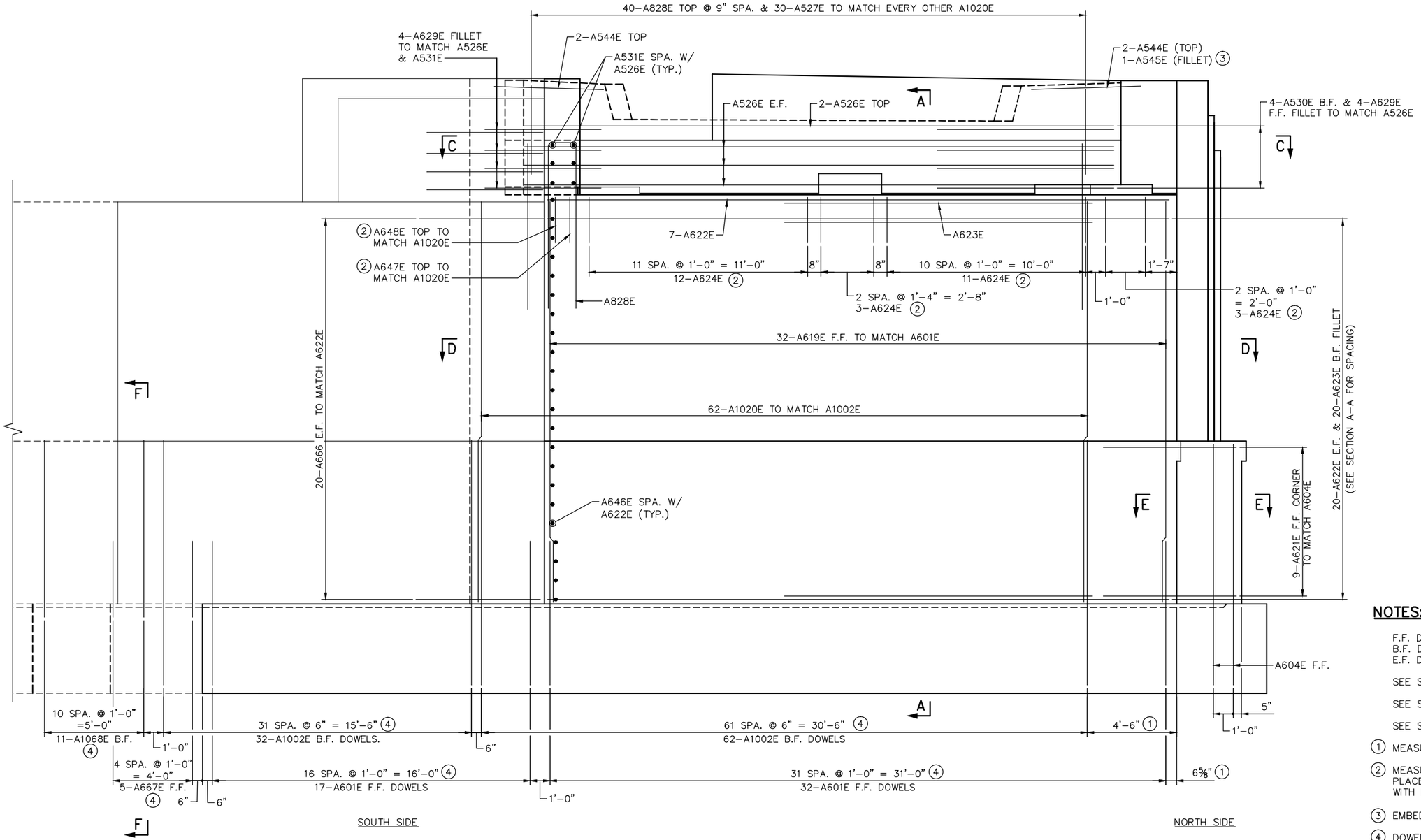

ELEVATION

NOTES:

F.F. DENOTES FRONT FACE
B.F. DENOTES BACK FACE
E.F. DENOTES EACH FACE

SEE SHEET 10 FOR SECTION A–A & F–F.

SEE SHEET 12 FOR SECTION C–C & D–D.

SEE SHEET 13 FOR SECTION E–E.

① MEASURED ALONG REFERENCE LINE.

② MEASURED ALONG REFERENCE LINE. CAREFULLY PLACE REINFORCEMENT TO AVOID INTERFERENCE WITH DRILLING HOLES FOR ANCHOR RODS.

③ EMBED BARS 1'–0" INTO WINGWALL.

④ DOWELS MAY BE SHIFTED SLIGHTLY TO AVOID INTERFERENCE WITH FOOTING REINFORCEMENT. MAINTAIN A CLEARANCE TO THE FACE OF CONCRETE OF 2" MIN. AND 4" MAX.

DRAFT-WORK IN PROCESS

NO.	DATE	BY	CHECK	DESIGN	REVISION / SUBMITTAL

DESIGNED BY: KAE | CHECKED BY: MDJ
DRAWN BY: LMT | CHECKED BY: MDJ

AECOM Kimley»Horn

90% SUBMISSION - 01/22/16

METROPOLITAN COUNCIL

SOUTHWEST Green Line LRT Extension

CIVIL - VOLUME 4F
TH 100 FREIGHT RAIL BRIDGE
BRIDGE 27W34
WEST ABUTMENT REINFORCEMENT 2

DISCIPLINE: STRUCTURES
SHEET NAME: CBR27W34-BRG-ABT-001-6

SHEET 9 OF 68

Dec, 11 2015 11:18 am V:\3400_ADC\CAD\SEGMENT E2\PLAN SHEETS\STRUCTURES\T100-FRT\CBR27W34-BRG-ABT-001.dwg By: Katie.Ellis

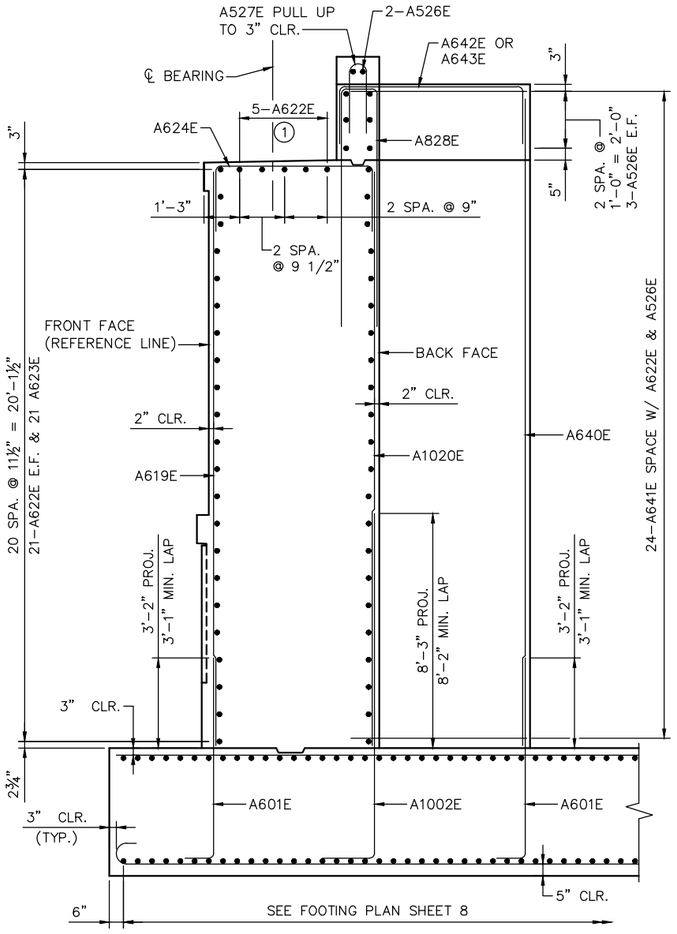

SECTION A–A
(SECTION THRU ABUTMENT)

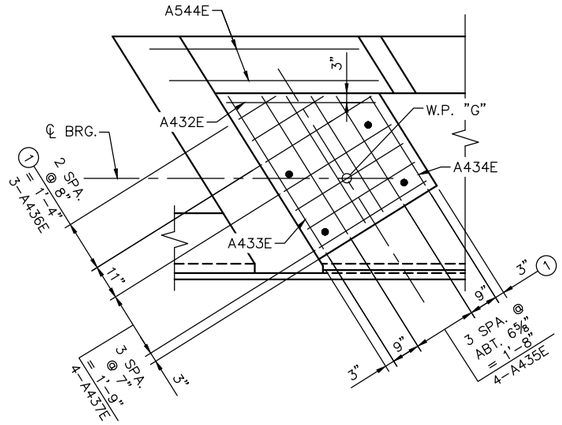

BRIDGE SEAT TYPE 1

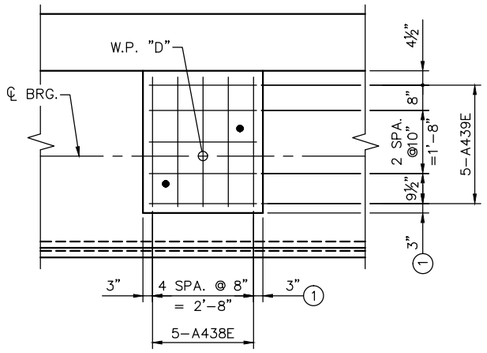

BRIDGE SEAT TYPE 3

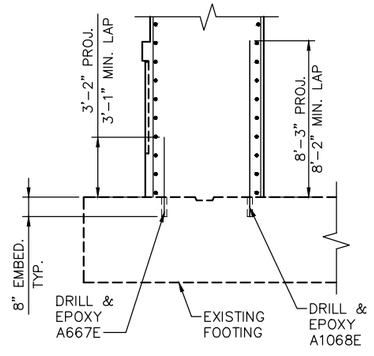

SECTION F–F
(SECTION THRU EXISTING ABUTMENT)

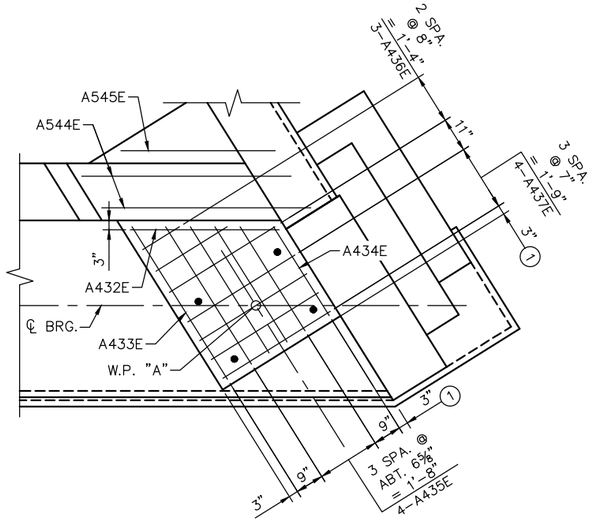

BRIDGE SEAT TYPE 2

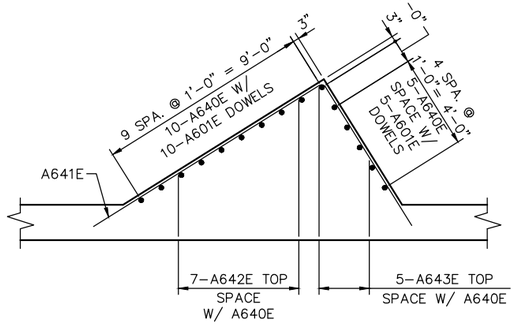

APPROACH BLOCK

NOTES:

F.F. DENOTES FRONT FACE
B.F. DENOTES BACK FACE
E.F. DENOTES EACH FACE

(1) CAREFULLY PLACE REINFORCEMENT TO AVOID INTERFERENCE WITH DRILLING HOLES FOR ANCHOR RODS.

DRAFT-WORK IN PROCESS

NO.	DATE	BY	CHECK	DESIGN	REVISION / SUBMITTAL

DESIGNED BY: KAE CHECKED BY: MDJ
DRAWN BY: LMT CHECKED BY: MDJ

AECOM Kimley»Horn

90% SUBMISSION - 01/22/16

METROPOLITAN COUNCIL

SOUTHWEST Green Line LRT Extension

CIVIL - VOLUME 4F
TH 100 FREIGHT RAIL BRIDGE
BRIDGE 27W34
WEST ABUTMENT REINFORCEMENT 3

DISCIPLINE: STRUCTURES
SHEET NAME: CBR27W34-BRG-ABT-001-7

SHEET 10 OF 68

Dec, 11 2015 11:18 am v:\3400_ADC\CAD\SEGMENT E2\PLAN SHEETS\STRUCTURES\T100-FRT\CBR27W34-BRG-ABT-001.dwg By: Katie.Ellis

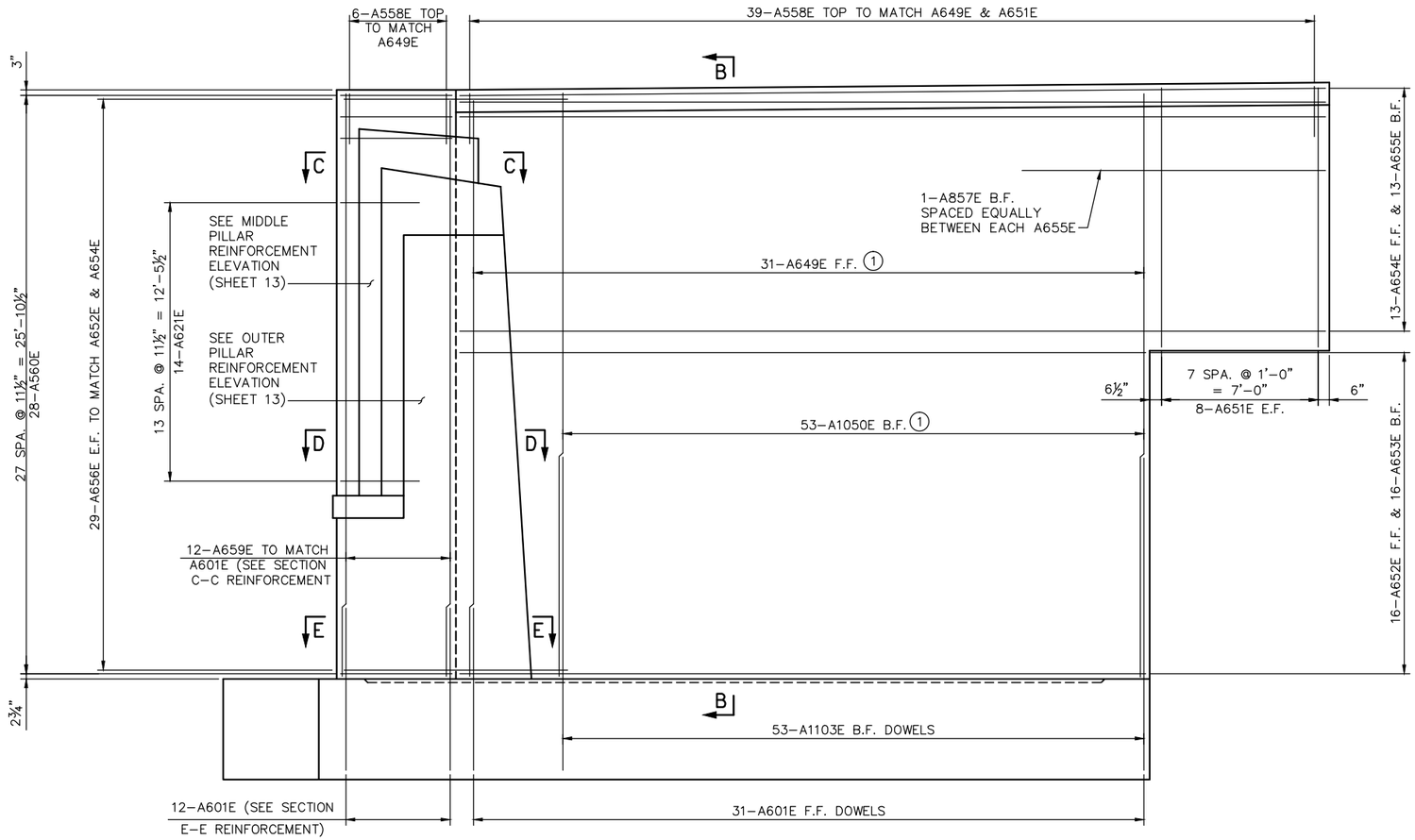

N.W. WINGWALL ELEVATION

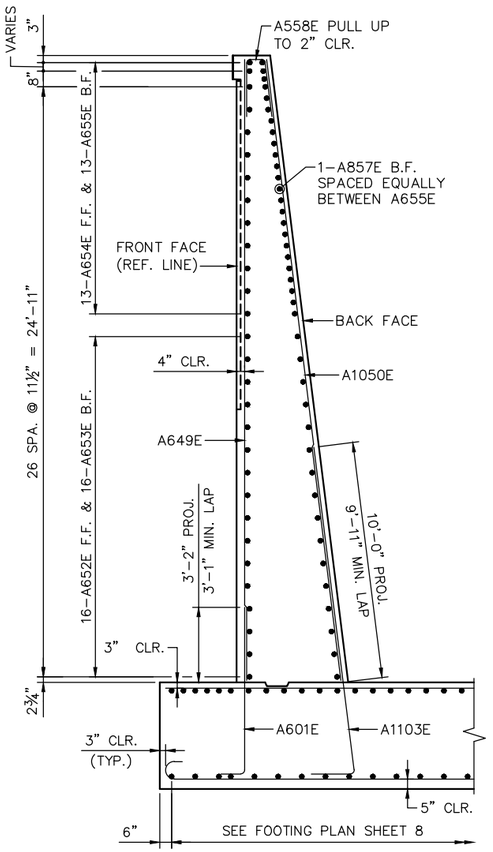

SECTION B–B

NOTES:

F.F. DENOTES FRONT FACE
B.F. DENOTES BACK FACE
E.F. DENOTES EACH FACE

SEE SHEET 12 FOR SECTIONS C–C & D–D.

SEE SHEET 13 FOR SECTION E–E.

(1) SPACED WITH FOOTING DOWELS.

DRAFT-WORK IN PROCESS

NO.	DATE	BY	CHECK	DESIGN	REVISION / SUBMITTAL

DESIGNED BY: KAE CHECKED BY: MDJ
DRAWN BY: LMT CHECKED BY: MDJ

AECOM Kimley»Horn

90% SUBMISSION - 01/22/16

METROPOLITAN COUNCIL

SOUTHWEST Green Line LRT Extension

CIVIL - VOLUME 4F
TH 100 FREIGHT RAIL BRIDGE
BRIDGE 27W34
WEST ABUTMENT REINFORCEMENT 4

DISCIPLINE: STRUCTURES
SHEET NAME: CBR27W34-BRG-ABT-001-8

SHEET 11 OF 68

Dec, 11 2015 11:18 am V:\3400_ADC\CAD\SEGMENT E2\PLAN SHEETS\STRUCTURES\T100-FRT\CBR27W34-BRG-ABT-001.dwg By: Katie.Ellis

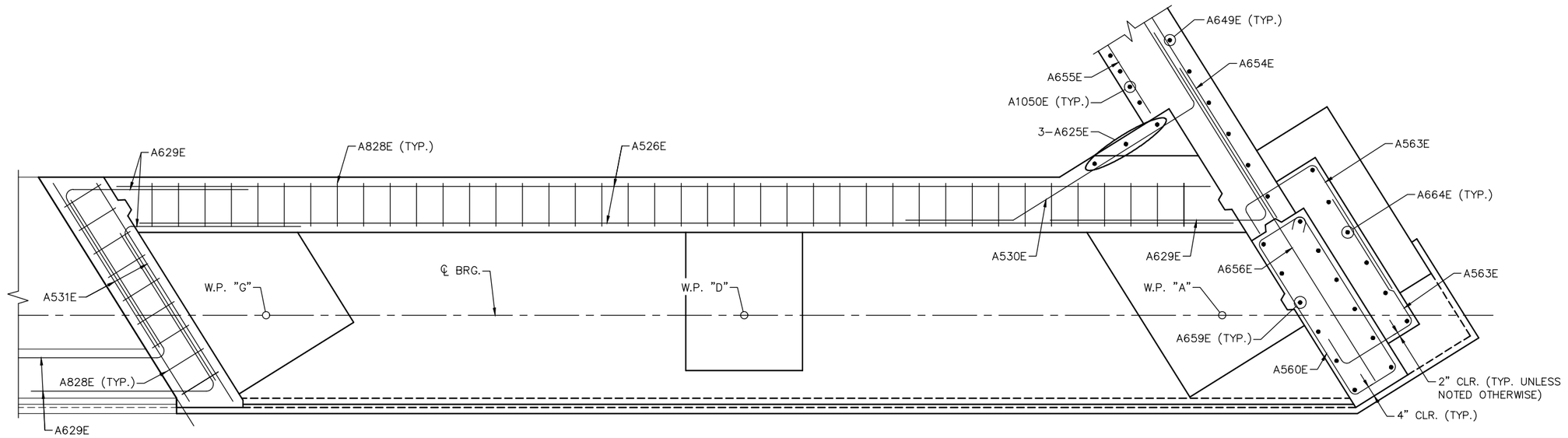

SECTION C–C

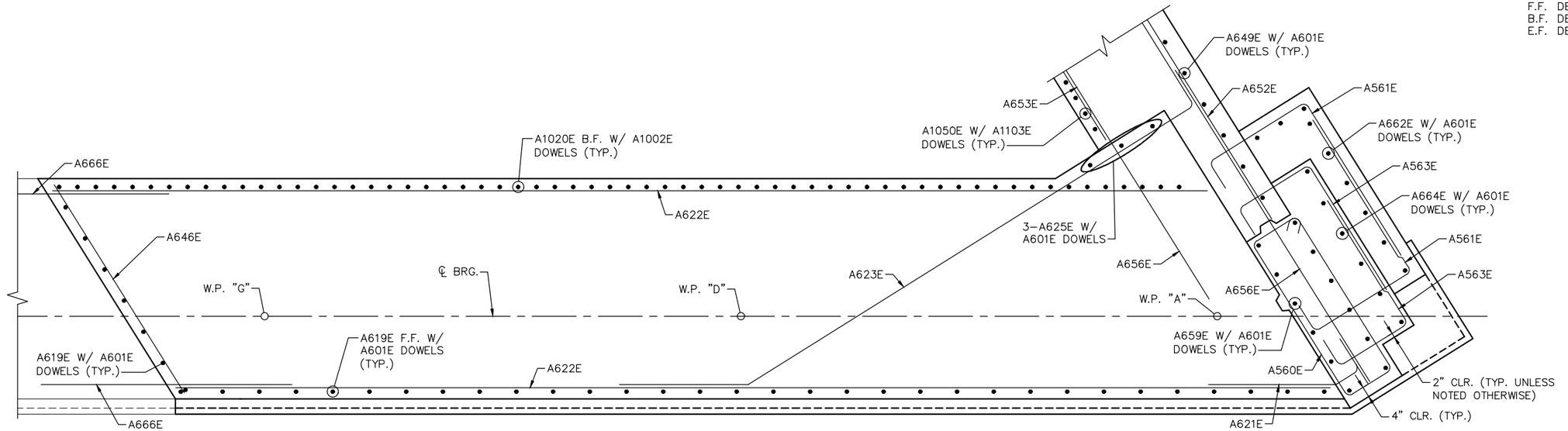

SECTION D–D

NOTES:

F.F. DENOTES FRONT FACE
B.F. DENOTES BACK FACE
E.F. DENOTES EACH FACE

DRAFT-WORK IN PROCESS

NO.	DATE	BY	CHECK	DESIGN	REVISION / SUBMITTAL

DESIGNED BY: KAE | CHECKED BY: MDJ
DRAWN BY: LMT | CHECKED BY: MDJ

AECOM Kimley»Horn

90% SUBMISSION - 01/22/16

METROPOLITAN COUNCIL

SOUTHWEST Green Line LRT Extension

CIVIL - VOLUME 4F
TH 100 FREIGHT RAIL BRIDGE
BRIDGE 27W34
WEST ABUTMENT REINFORCEMENT 5

DISCIPLINE: STRUCTURES

SHEET NAME: CBR27W34-BRG-ABT-001-9

SHEET 12 OF 68

Dec, 11 2015 11:18 am V:\3400_ADC\CAD\SEGMENT E2\PLAN SHEETS\STRUCTURES\T100-FRT\CBR27W34-BRG-ABT-001.dwg By: Katie.Ellis

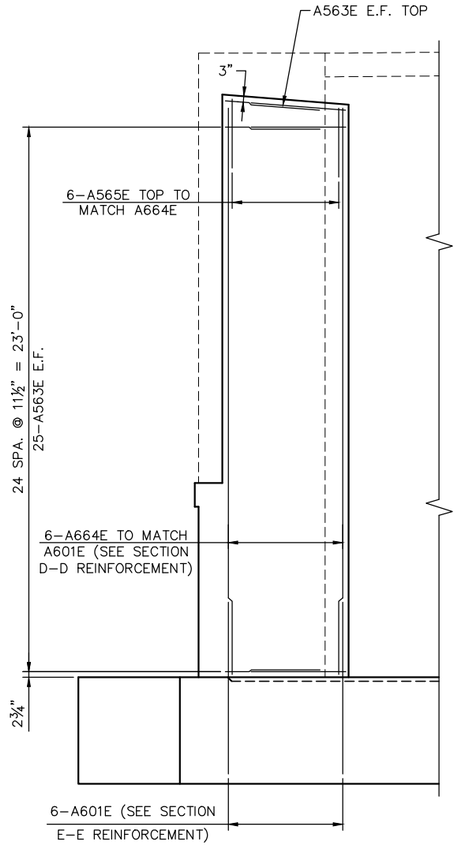

MIDDLE PILLAR ELEVATION ①

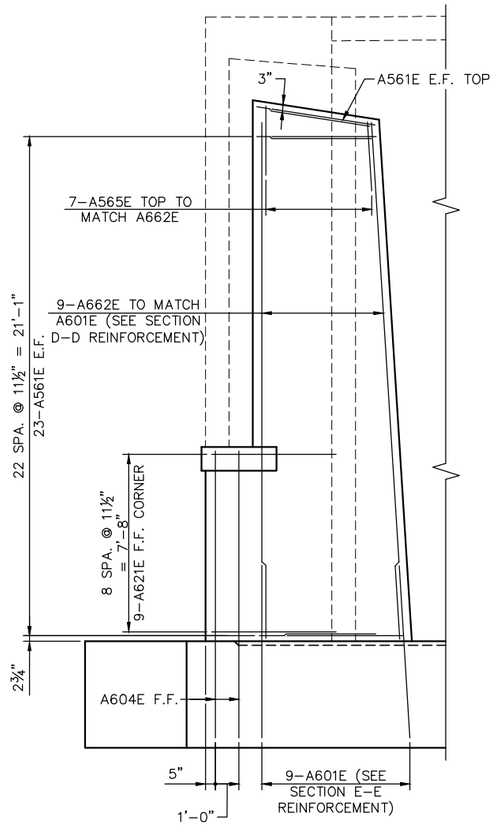

OUTER PILLAR ELEVATION ①

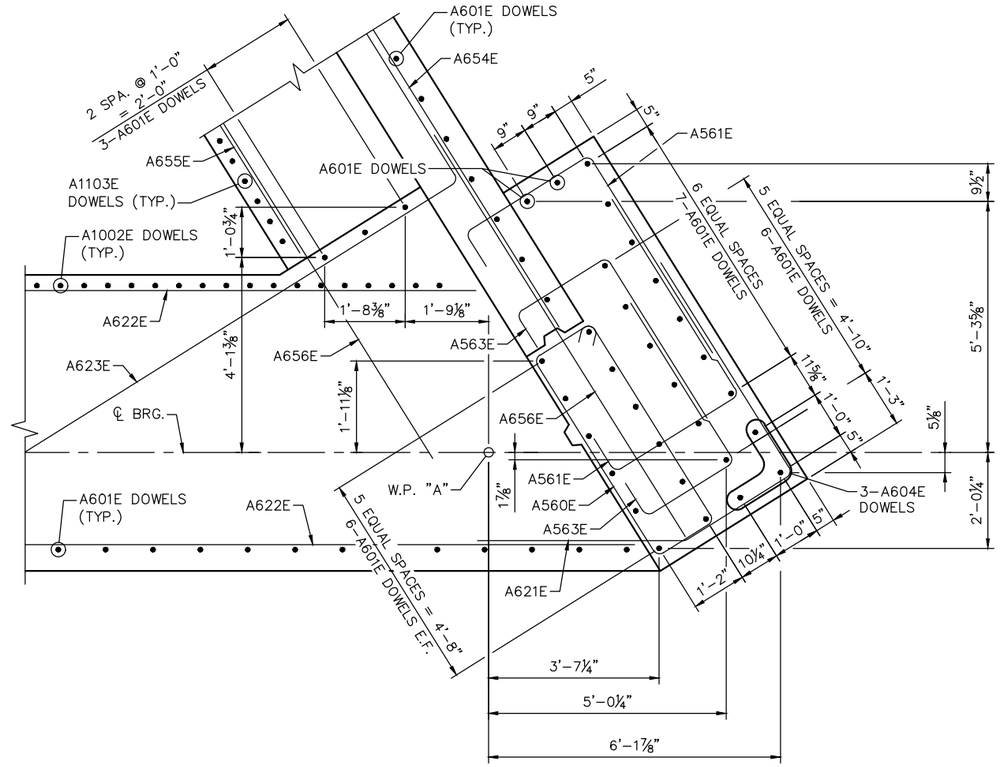

SECTION E–E

(TYPICAL VERTICAL BARS NOT SHOWN FOR CLARITY)

NOTES:

F.F. DENOTES FRONT FACE
B.F. DENOTES BACK FACE
E.F. DENOTES EACH FACE

① SEE SHEET 11 FOR LOCATION.

DRAFT-WORK IN PROCESS

NO.	DATE	BY	CHECK	DESIGN	REVISION / SUBMITTAL

DESIGNED BY: KAE | CHECKED BY: MDJ
DRAWN BY: LMT | CHECKED BY: MDJ

AECOM Kimley»Horn

90% SUBMISSION - 01/22/16

METROPOLITAN COUNCIL

SOUTHWEST Green Line LRT Extension

CIVIL - VOLUME 4F
TH 100 FREIGHT RAIL BRIDGE
BRIDGE 27W34
WEST ABUTMENT REINFORCEMENT 6

DISCIPLINE: STRUCTURES

SHEET NAME: CBR27W34-BRG-ABT-001-10

SHEET 13 OF 68

Dec, 11 2015 11:19 am V:\3400_ADC\CAD\SEGMENT E2\PLAN SHEETS\STRUCTURES\T100-FRT\CBR27W34-BRG-ABT-001.dwg By: Katie.Ellis

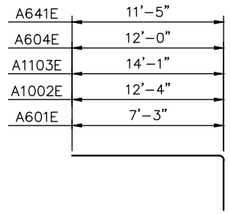

A601E, A1002E, A1103E, A604E, & A641E

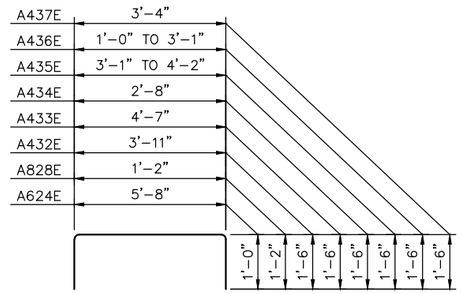

A624E, A828E, A432E, A433E, A434E, A435E, A436E, & A437E

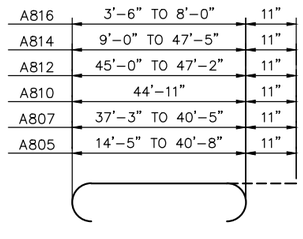

A805, A807, A810, A812, A814, & A816

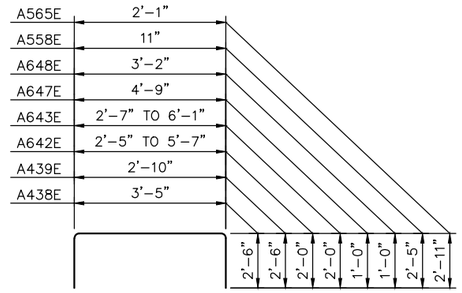

A438E, A439E, A642E, A643E, A647E, A648E, A558E, & A565E

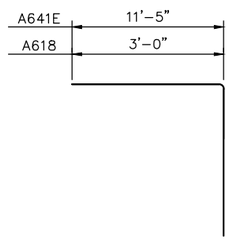

A618 & A641E

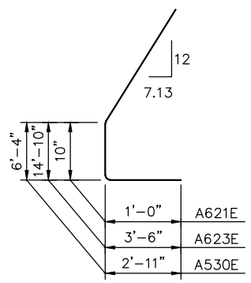

A621E, A623E, & A530E

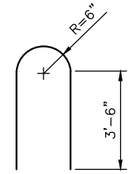

A527E

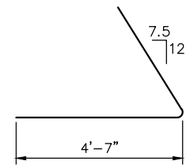

A629E

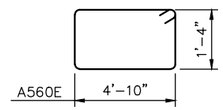

A560E

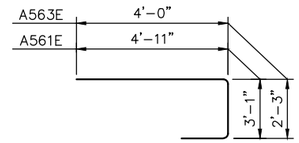

A561E & A563E

BILL OF REINFORCEMENT FOR WEST ABUTMENT

BAR	NO.	LENGTH	SHAPE	LOCATION
A601E	140	8'-3"	BENT	FOOTING, DOWEL F.F.
A1002E	94	14'-2"	BENT	FOOTING, DOWEL B.F.
A1103E	53	16'-1"	BENT	FOOTING, DOWEL
A604E	3	13'-0"	BENT	FOOTING, DOWEL
A805	1 SERIES OF 43	16'-3" TO 42'-6"	BENT	FOOTING, HORZ. BOT.
A1106	1 SERIES OF 57	14'-5" TO 40'-8"	STR.	FOOTING, HORZ. TOP
A807	1 SERIES OF 3	39'-1" TO 42'-3"	BENT	FOOTING, HORZ. BOT.
A1108	1 SERIES OF 3	37'-3" TO 40'-5"	STR.	FOOTING, HORZ. TOP
A609	8	53'-1"	STR.	FOOTING, HORZ. TOP & BOT.
A810	17	46'-9"	BENT	FOOTING, HORZ. BOT.
A1111	17	44'-11"	STR.	FOOTING, HORZ. TOP
A812	1 SERIES OF 8	46'-10" TO 49'-0"	BENT	FOOTING, HORZ. BOT.
A1113	1 SERIES OF 8	45'-0" TO 47'-2"	STR.	FOOTING, HORZ. TOP
A814	1 SERIES OF 49	10'-10" TO 49'-3"	BENT	FOOTING, HORZ. BOT.
A1115	1 SERIES OF 49	9'-0" TO 47'-5"	STR.	FOOTING, HORZ. TOP
A816	1 SERIES OF 5	5'-4" TO 9'-10"	BENT	FOOTING, HORZ. BOT.
A1117	1 SERIES OF 5	3'-6" TO 8'-0"	STR.	FOOTING, HORZ. TOP
A618	4	6'-0"	BENT	FOOTING, HORZ. TOP & BOT.
A619E	38	20'-4"	STR.	STEM, VERT. F.F.
A1020E	62	20'-4"	STR.	STEM, VERT. B.F.
A621E	23	6'-1"	BENT	STEM, TIE F.F.
A622E	45	31'-6"	STR.	STEM, HORZ. E.F.
A623E	20	21'-10"	BENT	STEM, TIE B.F.
A624E	29	7'-8"	BENT	STEM, TIE
A625E	3	20'-4"	STR.	STEM, VERT.
A526E	8	29'-9"	STR.	BACKWALL, HORZ. E.F.
A527E	30	7'-7"	BENT	BACKWALL, TIE
A828E	49	12'-6"	BENT	BACKWALL, TIE
A629E	20	9'-2"	BENT	BACKWALL, TIE
A530E	4	12'-2"	BENT	BACKWALL, TIE
A531E	8	7'-0"	STR.	BACKWALL, HORZ. E.F.
A432E	2	6'-11"	BENT	BRIDGE SEAT, TIE
A433E	2	7'-7"	BENT	BRIDGE SEAT, TIE

BILL OF REINFORCEMENT FOR WEST ABUTMENT

BAR	NO.	LENGTH	SHAPE	LOCATION
A434E	2	5'-8"	BENT	BRIDGE SEAT, TIE
A435E	2 SERIES OF 3	6'-1" TO 7'-2"	BENT	BRIDGE SEAT, TIE
A436E	2 SERIES OF 3	4'-0" TO 6'-1"	BENT	BRIDGE SEAT, TIE
A437E	8	6'-4"	BENT	BRIDGE SEAT, TIE
A438E	5	8'-5"	BENT	BRIDGE SEAT, TIE
A439E	5	7'-10"	BENT	BRIDGE SEAT, TIE
A640E	15	23'-2"	STR.	APPROACH BLOCK, VERT.
A641E	24	18'-6"	BENT	APPROACH BLOCK, TIE
A642E	1 SERIES OF 7	6'-5" TO 9'-7"	BENT	APPROACH BLOCK, TIE
A643E	1 SERIES OF 5	6'-7" TO 10'-1"	BENT	APPROACH BLOCK, TIE
A544E	4	5'-7"	STR.	BACKWALL, CORNER
A545E	1	4'-11"	STR.	BACKWALL, CORNER
A646E	21	7'-0"	STR.	STEM, HORZ.
A647E	1	6'-9"	BENT	STEM, TOP
A648E	1	5'-2"	BENT	STEM, TOP
A649E	31	26'-2"	STR.	WINGWALL, VERT. F.F.
A1050E	53	26'-2"	STR.	WINGWALL, VERT. B.F.
A651E	8	11'-8"	STR.	WINGWALL, VERT. E.F.
A652E	16	30'-8"	STR.	WINGWALL, HORZ. F.F.
A653E	16	30'-8"	STR.	WINGWALL, HORZ. B.F.
A654E	13	38'-9"	STR.	WINGWALL, HORZ. F.F.
A655E	13	38'-9"	STR.	WINGWALL, HORZ. B.F.
A656E	29	10'-0"	STR.	WINGWALL, HORZ.
A857E	12	11'-11"	STR.	WINGWALL, HORZ. B.F.
A558E	45	5'-9"	BENT	WINGWALL, TOP
A659E	12	26'-2"	STR.	PILLAR, VERT.
A560E	28	12'-4"	BENT	WINGWALL, STIRRUP
A561E	25	8'-10"	BENT	PILLAR, TIE
A662E	9	21'-10"	STR.	PILLAR, VERT.
A563E	52	7'-1"	BENT	PILLAR, TIE
A664E	6	24'-0"	STR.	PILLAR, VERT.
A565E	13	5'-0"	BENT	PILLAR, TIE TOP
A666E	24	6'-6"	STR.	CONST. JT.
A667E	5	3'-10"	STR.	EX. FOOTING DOWEL F.F.
A1068E	11	8'-11"	STR.	EX. FOOTING DOWEL B.F.

DRAFT-WORK IN PROCESS

NO.	DATE	BY	CHECK	DESIGN	REVISION / SUBMITTAL

DESIGNED BY: KAE CHECKED BY: MDJ
DRAWN BY: LMT CHECKED BY: MDJ

AECOM Kimley»Horn

90% SUBMISSION - 01/22/16

METROPOLITAN COUNCIL

SOUTHWEST Green Line LRT Extension

CIVIL - VOLUME 4F
TH 100 FREIGHT RAIL BRIDGE
BRIDGE 27W34
WEST ABUTMENT REINFORCEMENT 7

DISCIPLINE: STRUCTURES
SHEET NAME: CBR27W34-BRG-ABT-001-11

SHEET 14 OF 68

Dec, 11 2015 11:19 am V:\3400_ADC\CAD\SEGMENT E2\PLAN SHEETS\STRUCTURES\T100-FRT\CBR27W34-BRG-ABT-001.dwg By: Katie.Ellis

EAST ABUTMENT SPREAD FOOTING LOAD DATA	
* ALLOWABLE DESIGN BEARING PRESSURE	3.4 TONS/ SQ FT
EFFECTIVE WIDTH B'	27.2 FT
ALLOWABLE BEARING RESISTANCE φb qn	3.8 TONS/ SQ FT

* BASED ON AREMA SERVICE III LOAD COMBINATION.

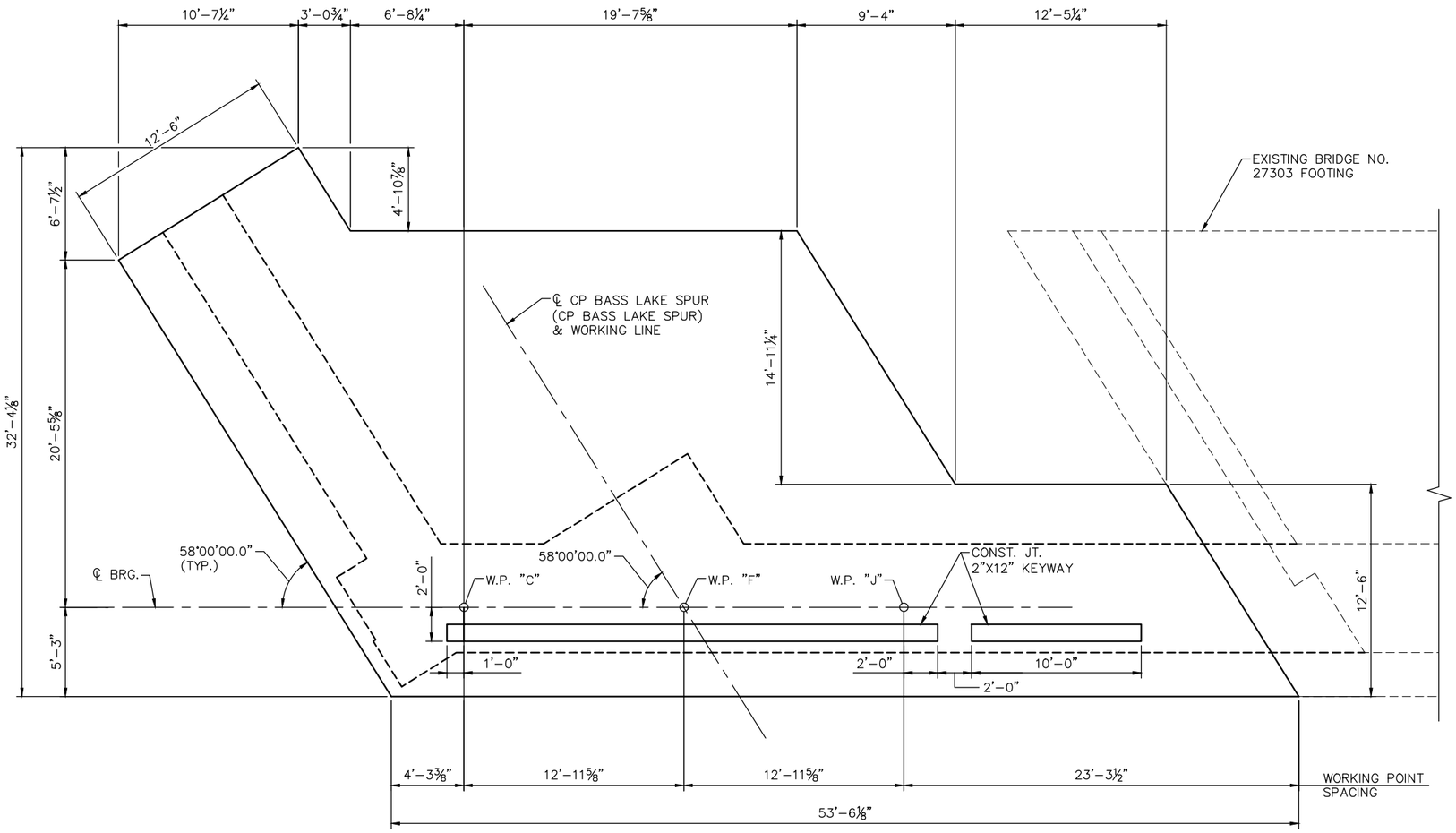

FOOTING PLAN

DRAFT-WORK IN PROCESS

NO.	DATE	BY	CHECK	DESIGN	REVISION / SUBMITTAL

DESIGNED BY: KAE | CHECKED BY: MDJ
DRAWN BY: LMT | CHECKED BY: MDJ

AECOM Kimley»Horn

90% SUBMISSION - 01/22/16

METROPOLITAN COUNCIL

SOUTHWEST Green Line LRT Extension

CIVIL - VOLUME 4F
TH 100 FREIGHT RAIL BRIDGE
BRIDGE 27W34
EAST ABUTMENT DETAILS 1

DISCIPLINE: STRUCTURES
SHEET NAME: CBR27W34-BRG-ABT-002-1

SHEET 15 OF 68

Dec, 11 2015 11:19 am V:\3400_ADC\CAD\SEGMENT E2\PLAN SHEETS\STRUCTURES\T100-FRT\CBR27W34-BRG-ABT-002.dwg By: Katie.Ellis

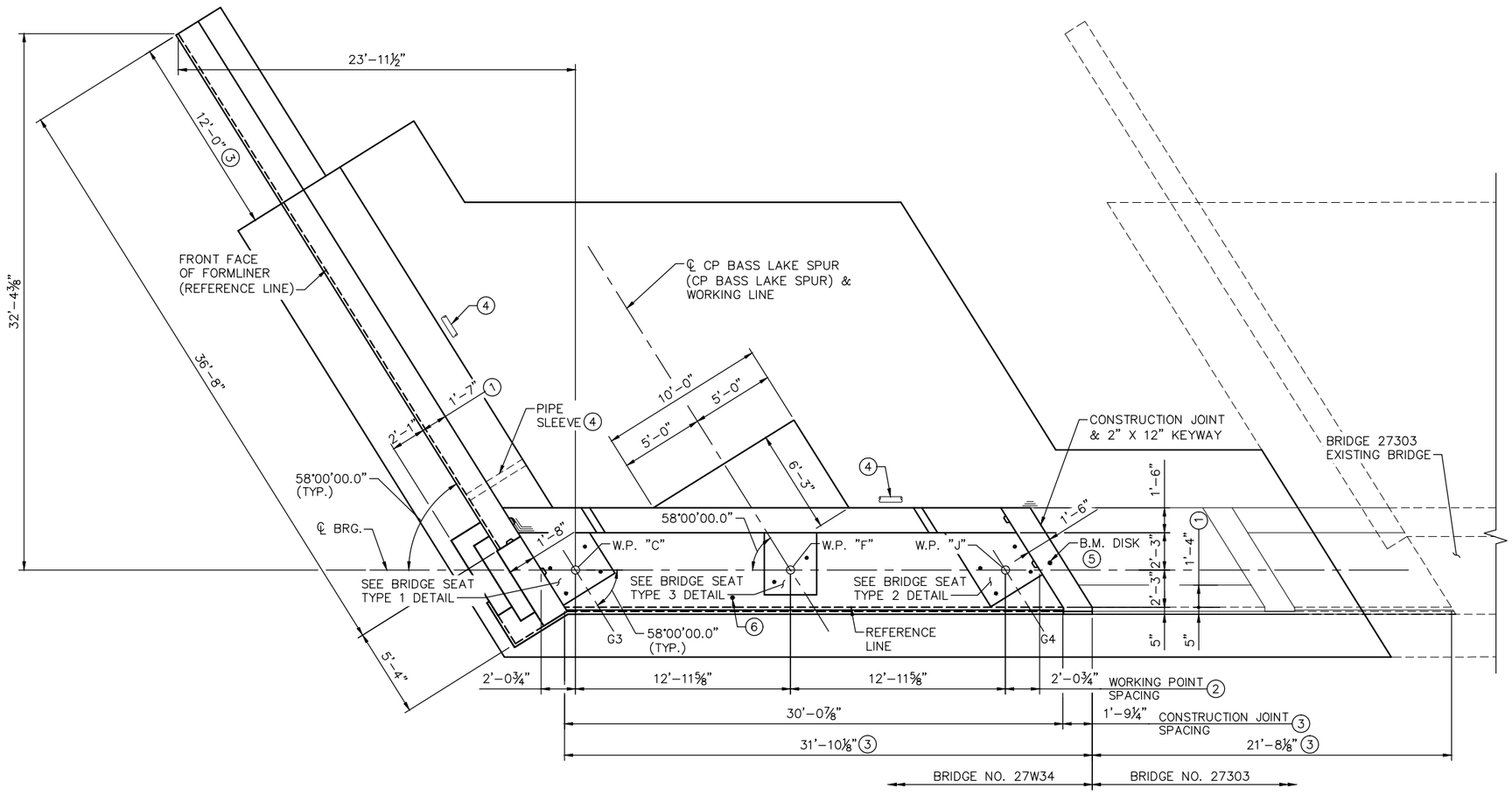

PLAN

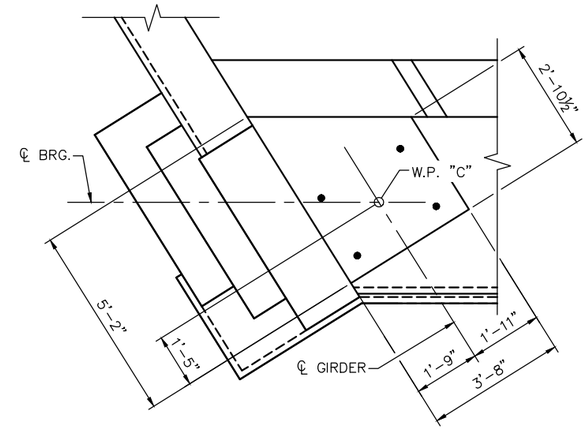

BRIDGE SEAT TYPE 1

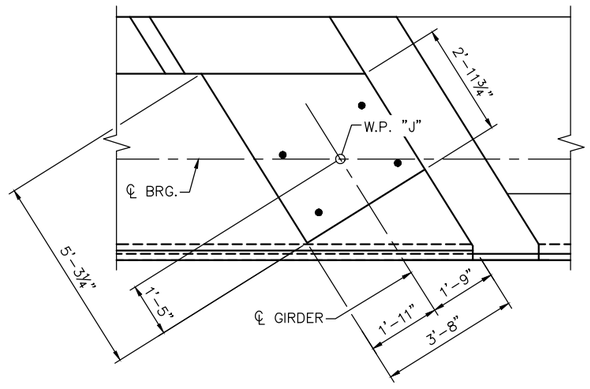

BRIDGE SEAT TYPE 2

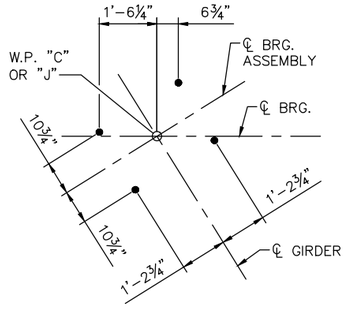

ANCHOR ROD LAYOUT
(BEARING E1)

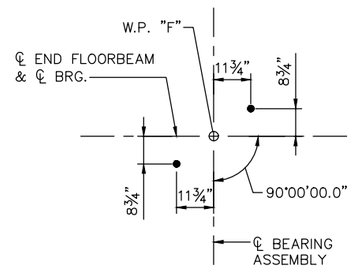

ANCHOR ROD LAYOUT
(BEARING E2)

NOTES:

A 72 HOUR DELAY IS REQUIRED BETWEEN ALL ADJACENT POURS OF WALLS AND STEMS.

DAMPROOFING SHALL BE APPLIED TO THE BACK FACE OF THE ABUTMENT AND WINGWALL FROM TOP OF FOOTING TO WITHIN 6" FROM TOP OF ABUTMENTS/WINGWALL.

(1) DIMENSIONS SHOWN AT TOP OF WALL.

(2) MEASURED ALONG ℄ BEARING.

(3) MEASURED ALONG REFERENCE LINE.

(4) DRAINAGE SYSTEM. SEE DETAIL B910.

(5) COUNCIL WILL FURNISH DISK. BEND PRONGS OUTWARD TO ANCHOR IN CONCRETE.

(6) 1" DIA. R.S.C. CONDUIT SYSTEM (LIGHTING)

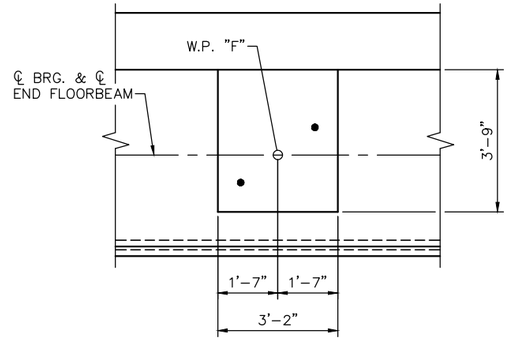

BRIDGE SEAT TYPE 3

DRAFT-WORK IN PROCESS

NO.	DATE	BY	CHECK	DESIGN	REVISION / SUBMITTAL

DESIGNED BY: KAE | CHECKED BY: MDJ
DRAWN BY: LMT | CHECKED BY: MDJ

AECOM Kimley»Horn

90% SUBMISSION - 01/22/16

METROPOLITAN COUNCIL

SOUTHWEST Green Line LRT Extension

CIVIL - VOLUME 4F
TH 100 FREIGHT RAIL BRIDGE
BRIDGE 27W34
EAST ABUTMENT DETAILS 2

DISCIPLINE: STRUCTURES

SHEET NAME: CBR27W34-BRG-ABT-002-2

SHEET 16 OF 68

Dec, 11 2015 11:19 am V:\3400_ADC\CAD\SEGMENT E2\PLAN SHEETS\STRUCTURES\T100-FRT\CBR27W34-BRG-ABT-002.dwg By: Katie.Ellis

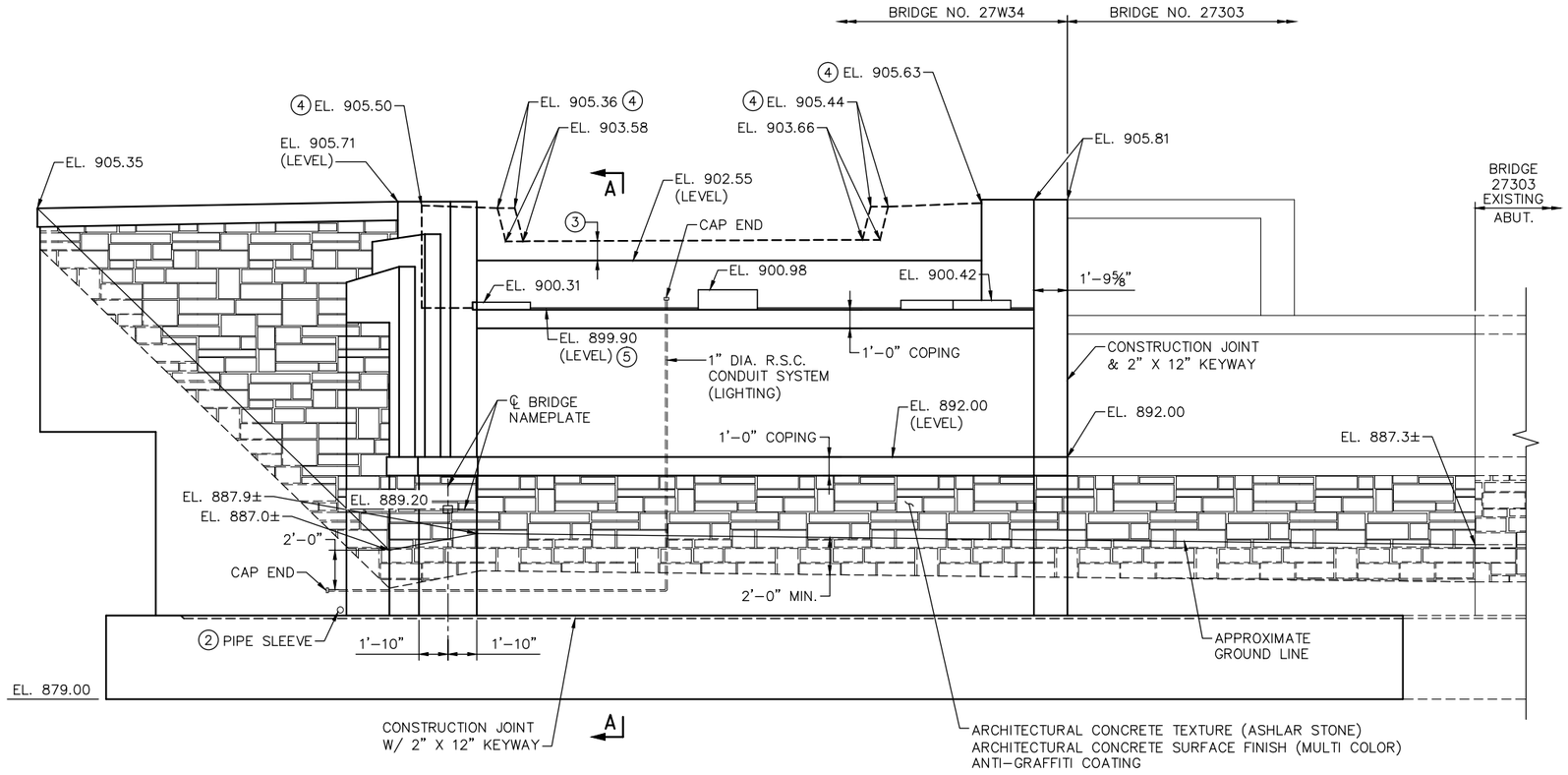

ELEVATION

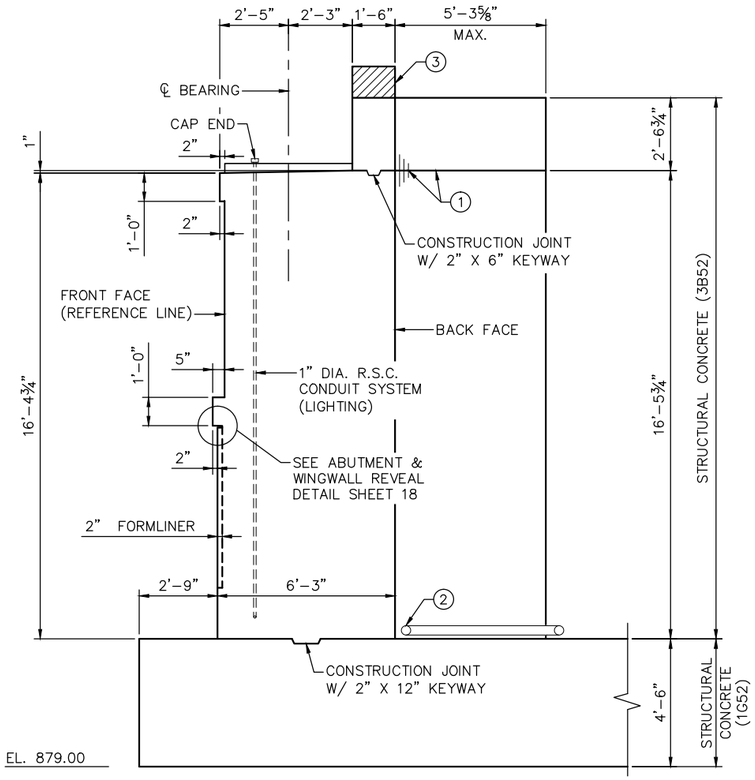

SECTION A–A
(SECTION THRU ABUTMENT)

NOTES:

1. ① MEMBRANE WATERPROOFING SYSTEM PER MnDOT SPEC. 2481.3B.
2. ② SEE DRAINAGE SYSTEM (BRIDGE DECK) DETAILS.
3. ③ CONCRETE TO BE POURED AFTER BACKWALL PROTECTION ANGLES HAVE BEEN INSTALLED (SEE WATERPROOFING AND DRAINAGE DETAILS).
4. ④ ELEVATIONS SHOWN AT BOTTOM OF WALK PLATE.
5. ⑤ ELEVATION AT ABUTMENT FRONT FACE.
6. CONTRACTOR TO COORDINATE INFILL WALL & ASSOCIATED ORNAMENTAL RAILING CONSTRUCTION WITH 27W34 SUPERSTRUCTURE RELOCATION.

DRAFT-WORK IN PROCESS

NO.	DATE	BY	CHECK	DESIGN	REVISION / SUBMITTAL

DESIGNED BY: KAE CHECKED BY: MDJ
DRAWN BY: LMT CHECKED BY: MDJ

AECOM Kimley»Horn

90% SUBMISSION - 01/22/16

METROPOLITAN COUNCIL

SOUTHWEST Green Line LRT Extension

CIVIL - VOLUME 4F
TH 100 FREIGHT RAIL BRIDGE
BRIDGE 27W34
EAST ABUTMENT DETAILS 3

DISCIPLINE: STRUCTURES
SHEET NAME: CBR27W34-BRG-ABT-002-3

SHEET 17 OF 68

Dec, 11 2015 11:19 am V:\3400_ADC\CAD\SEGMENT E2\PLAN SHEETS\STRUCTURES\T100-FRT\CBR27W34-BRG-ABT-002.dwg By: Katie.Ellis

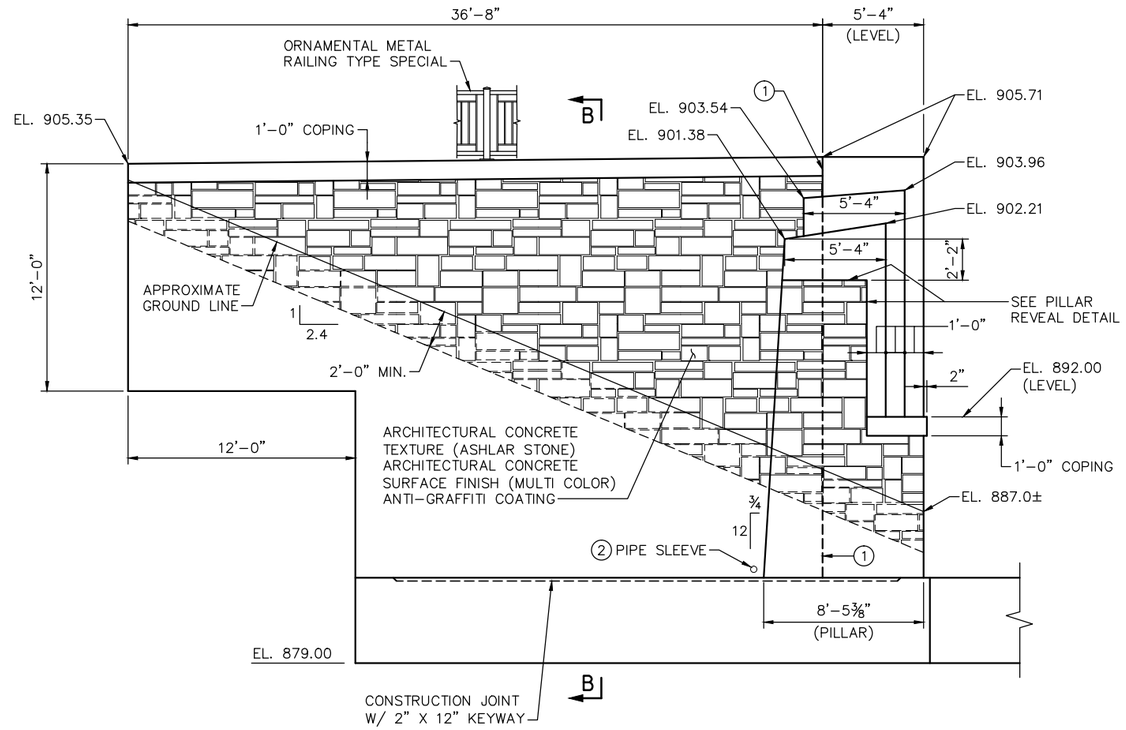

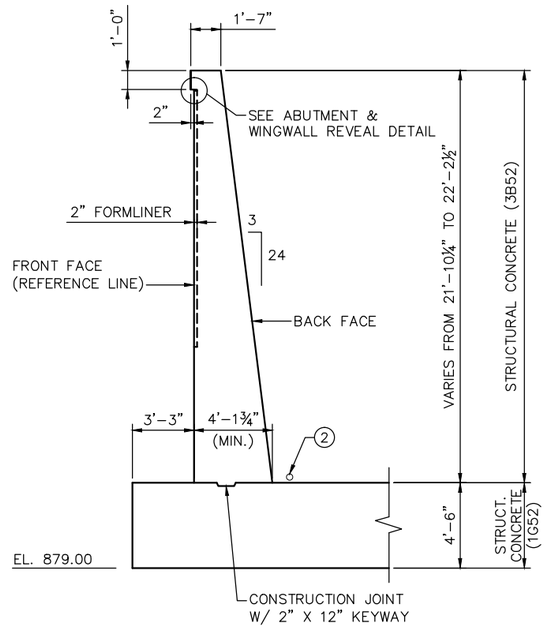

N.E. WINGWALL ELEVATION

SECTION B–B
(SECTION THRU WINGWALL)

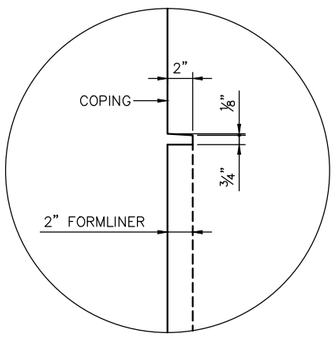

PILLAR REVEAL DETAIL

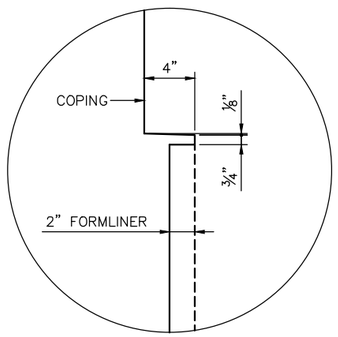

ABUTMENT & WINGWALL REVEAL DETAIL

NOTES:

1. CONSTRUCTION JOINT W/ 2" X 6" KEYWAY.
2. SEE DRAINAGE SYSTEM (BRIDGE DECK) DETAILS.

DRAFT-WORK IN PROCESS

NO.	DATE	BY	CHECK	DESIGN	REVISION / SUBMITTAL

DESIGNED BY: KAE | CHECKED BY: MDJ
DRAWN BY: LMT | CHECKED BY: MDJ

AECOM Kimley»Horn

90% SUBMISSION - 01/22/16

METROPOLITAN COUNCIL

SOUTHWEST Green Line LRT Extension

CIVIL - VOLUME 4F
TH 100 FREIGHT RAIL BRIDGE
BRIDGE 27W34
EAST ABUTMENT DETAILS 4

DISCIPLINE: STRUCTURES
SHEET NAME: CBR27W34-BRG-ABT-002-4

SHEET 18 OF 68

Dec, 11 2015 11:19 am V:\3400_ADC\CAD\SEGMENT E2\PLAN SHEETS\STRUCTURES\T100-FRT\CBR27W34-BRG-ABT-002.dwg By: Katie.Ellis

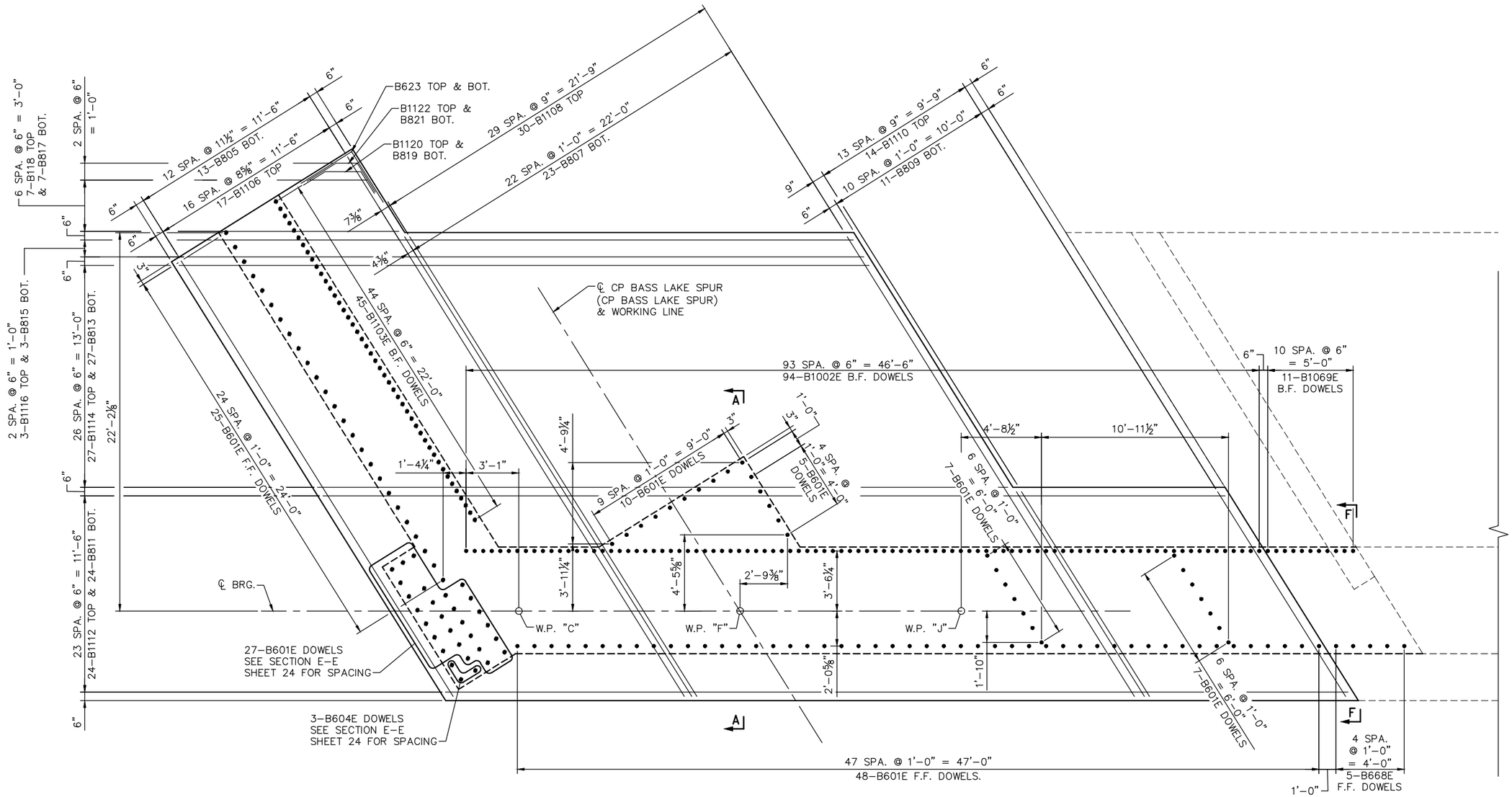

NORTH SIDE

FOOTING PLAN

SOUTH SIDE

NOTES:

F.F. DENOTES FRONT FACE
B.F. DENOTES BACK FACE
E.F. DENOTES EACH FACE

SEE SHEET 21 FOR SECTION A–A & F–F.

DRAFT-WORK IN PROCESS

NO.	DATE	BY	CHECK	DESIGN	REVISION / SUBMITTAL

DESIGNED BY: KAE | CHECKED BY: MDJ
DRAWN BY: LMT | CHECKED BY: MDJ

AECOM Kimley»Horn

90% SUBMISSION - 01/22/16

METROPOLITAN COUNCIL

SOUTHWEST Green Line LRT Extension

CIVIL - VOLUME 4F
TH 100 FREIGHT RAIL BRIDGE
BRIDGE 27W34
EAST ABUTMENT REINFORCEMENT 1

DISCIPLINE: STRUCTURES
SHEET NAME: CBR27W34-BRG-ABT-002-5

SHEET 19 OF 68

Dec, 11 2015 11:19 am V:\3400_ADC\CAD\SEGMENT E2\PLAN SHEETS\STRUCTURES\T100-FRT\CBR27W34-BRG-ABT-002.dwg By: Katie.Ellis

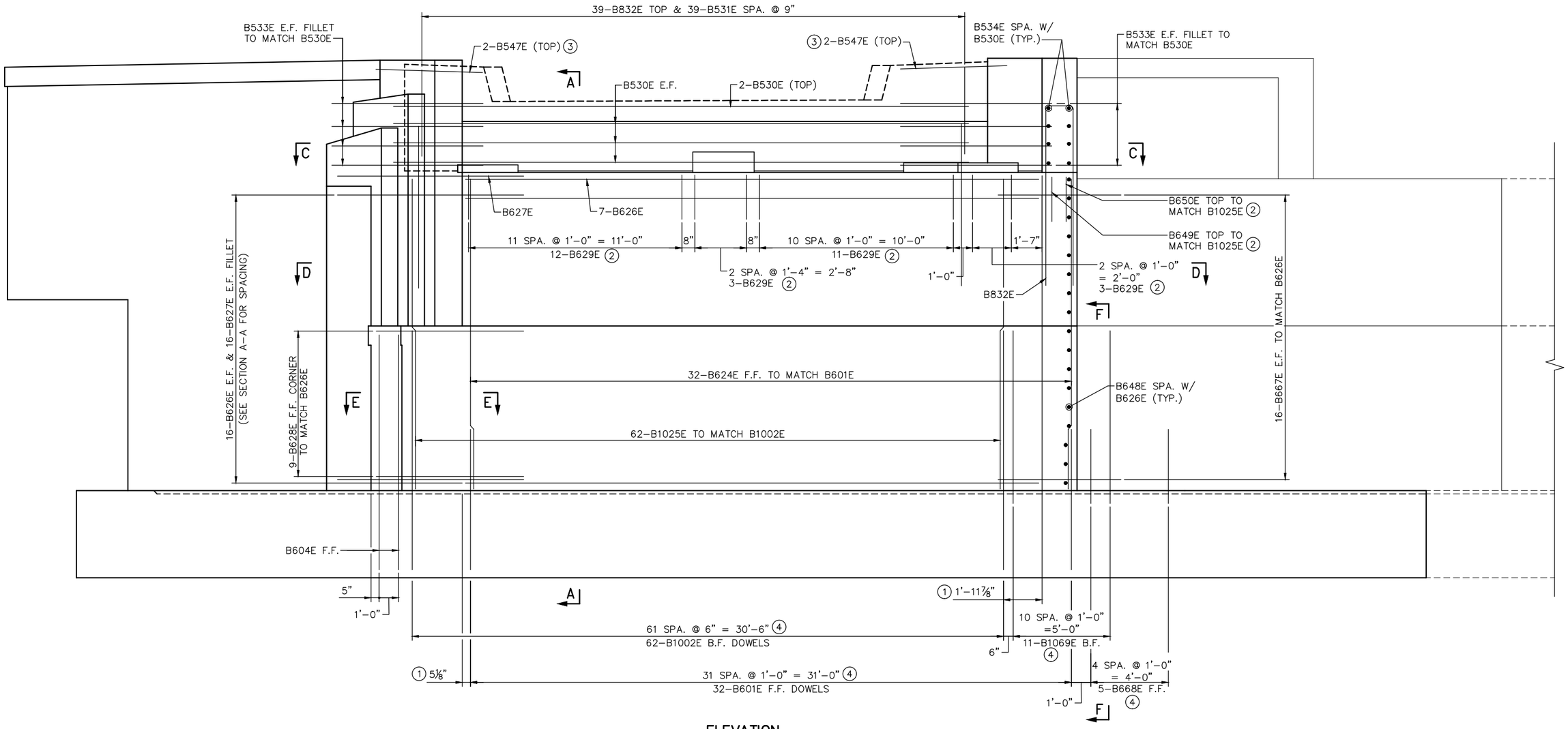

ELEVATION

NOTES:

F.F. DENOTES FRONT FACE
B.F. DENOTES BACK FACE
E.F. DENOTES EACH FACE

SEE SHEET 21 FOR SECTION A–A & F–F.

SEE SHEET 23 FOR SECTION C–C & D–D.

SEE SHEET 24 FOR SECTION E–E.

(1) MEASURED ALONG REFERENCE LINE.

(2) MEASURED ALONG REFERENCE LINE. CAREFULLY PLACE REINFORCEMENT TO AVOID INTERFERENCE WITH DRILLING HOLES FOR ANCHOR RODS.

(3) EMBED BARS 1'–0" INTO WINGWALL.

(4) DOWELS MAY BE SHIFTED SLIGHTLY TO AVOID INTERFERENCE WITH FOOTING REINFORCEMENT. MAINTAIN A CLEARANCE TO THE FACE OF CONCRETE OF 2" MIN. AND 4" MAX.

DRAFT-WORK IN PROCESS

NO.	DATE	BY	CHECK	DESIGN	REVISION / SUBMITTAL

DESIGNED BY: KAE | CHECKED BY: MDJ
DRAWN BY: LMT | CHECKED BY: MDJ

AECOM Kimley»Horn

90% SUBMISSION - 01/22/16

METROPOLITAN COUNCIL

SOUTHWEST Green Line LRT Extension

CIVIL - VOLUME 4F
TH 100 FREIGHT RAIL BRIDGE
BRIDGE 27W34
EAST ABUTMENT REINFORCEMENT 2

DISCIPLINE: STRUCTURES
SHEET NAME: CBR27W34-BRG-ABT-002-6

SHEET 20 OF 68

Dec, 11 2015 11:19 am V:\3400_ADC\CAD\SEGMENT E2\PLAN SHEETS\STRUCTURES\T100-FRT\CBR27W34-BRG-ABT-002.dwg By: Katie.Ellis

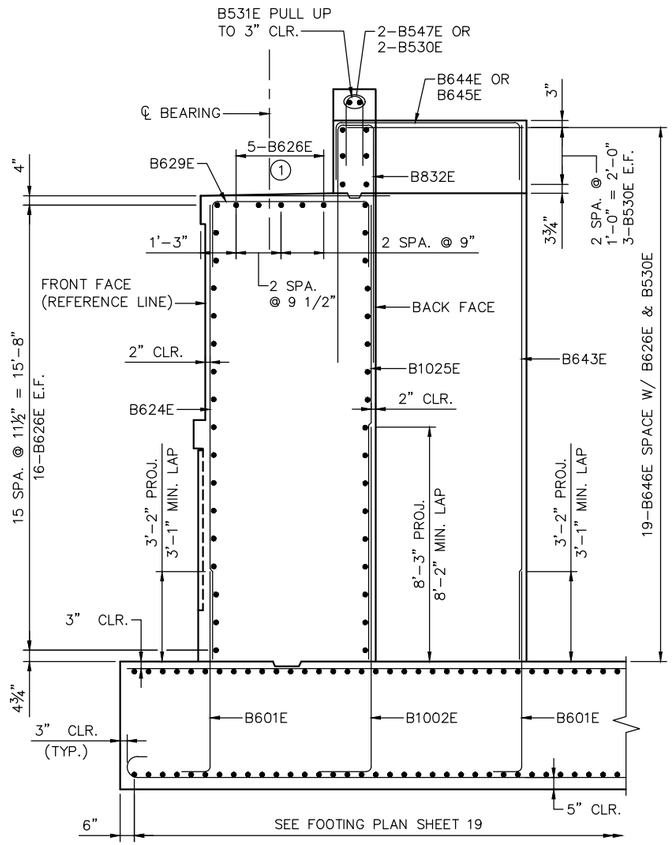

SECTION A–A
(SECTION THRU ABUTMENT)

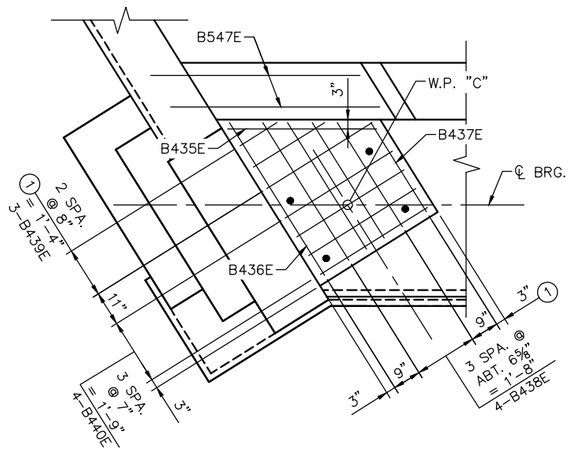

BRIDGE SEAT TYPE 1

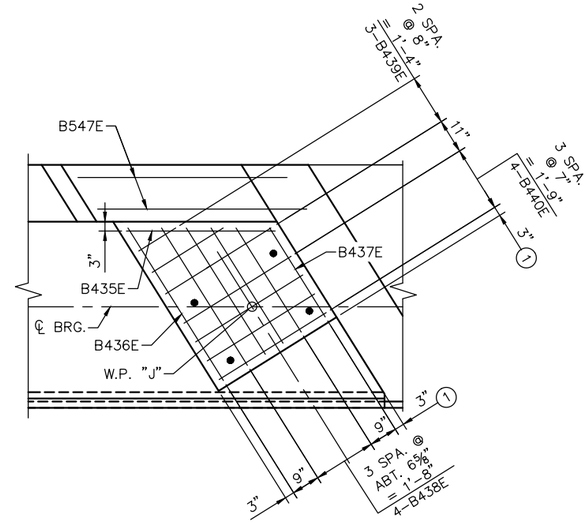

BRIDGE SEAT TYPE 2

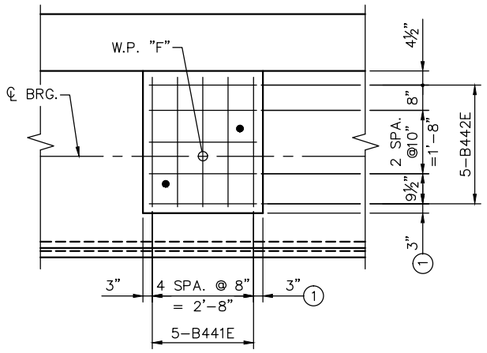

BRIDGE SEAT TYPE 3

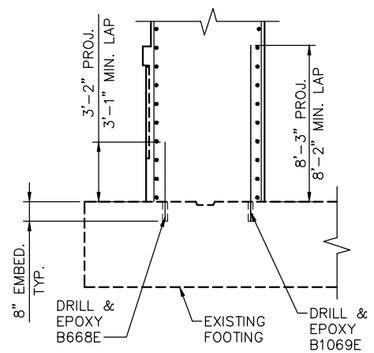

SECTION F–F
(SECTION THRU EXISTING ABUTMENT)

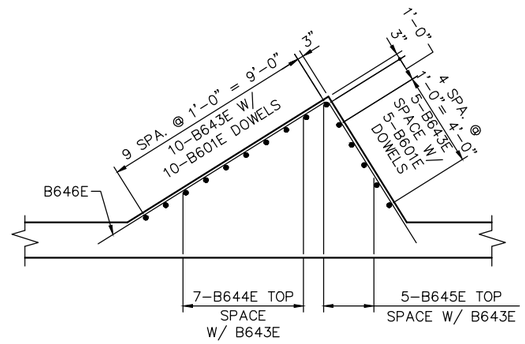

APPROACH BLOCK

NOTES:

F.F. DENOTES FRONT FACE
B.F. DENOTES BACK FACE
E.F. DENOTES EACH FACE

(1) CAREFULLY PLACE REINFORCEMENT TO AVOID INTERFERENCE WITH DRILLING HOLES FOR ANCHOR RODS.

DRAFT-WORK IN PROCESS

NO.	DATE	BY	CHECK	DESIGN	REVISION / SUBMITTAL

DESIGNED BY: KAE | CHECKED BY: MDJ
DRAWN BY: LMT | CHECKED BY: MDJ

AECOM Kimley»Horn

90% SUBMISSION - 01/22/16

METROPOLITAN COUNCIL

SOUTHWEST Green Line LRT Extension

CIVIL - VOLUME 4F
TH 100 FREIGHT RAIL BRIDGE
BRIDGE 27W34
EAST ABUTMENT REINFORCEMENT 3

DISCIPLINE: STRUCTURES
SHEET NAME: CBR27W34-BRG-ABT-002-7

SHEET 21 OF 68

Dec, 11 2015 11:19 am V:\3400_ADC\CAD\SEGMENT E2\PLAN SHEETS\STRUCTURES\T100-FRT\CBR27W34-BRG-ABT-002.dwg By: Katie.Ellis

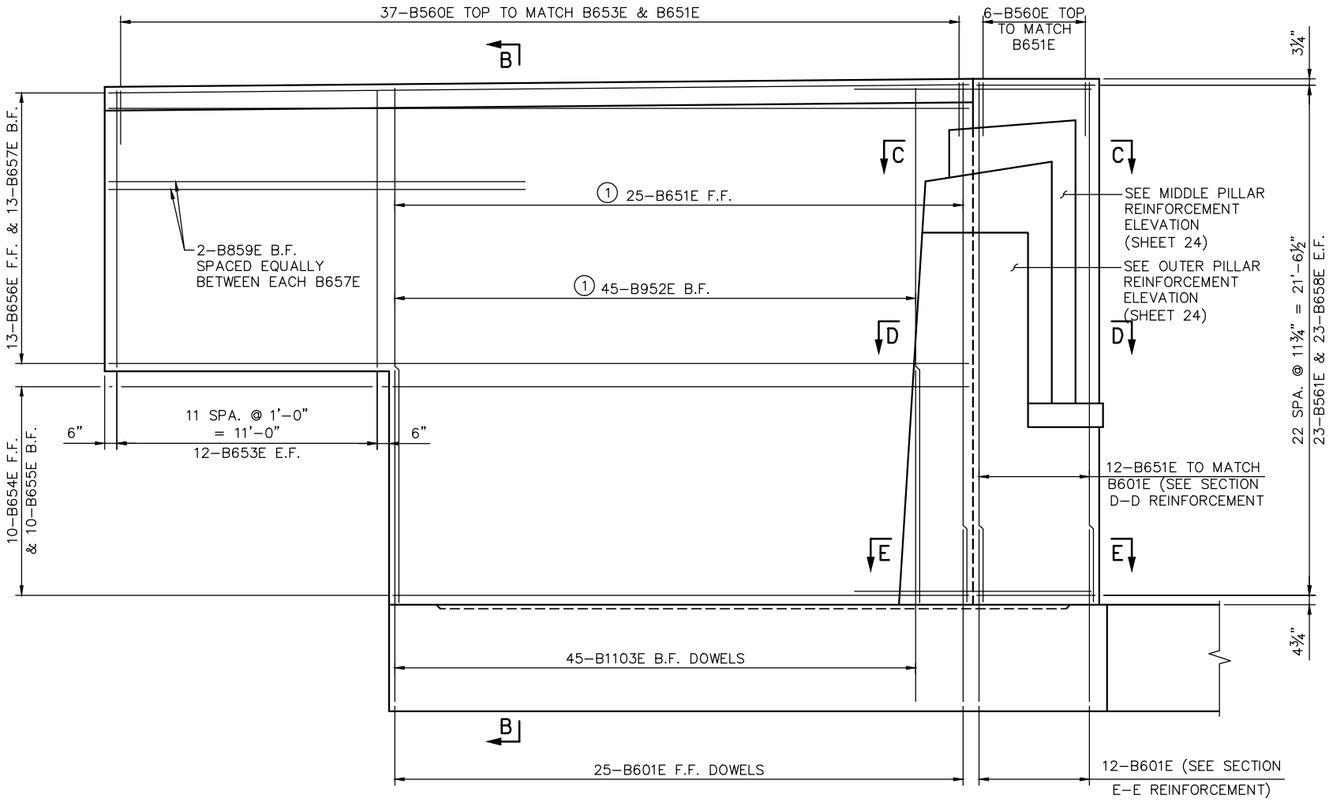

N.E. WINGWALL ELEVATION

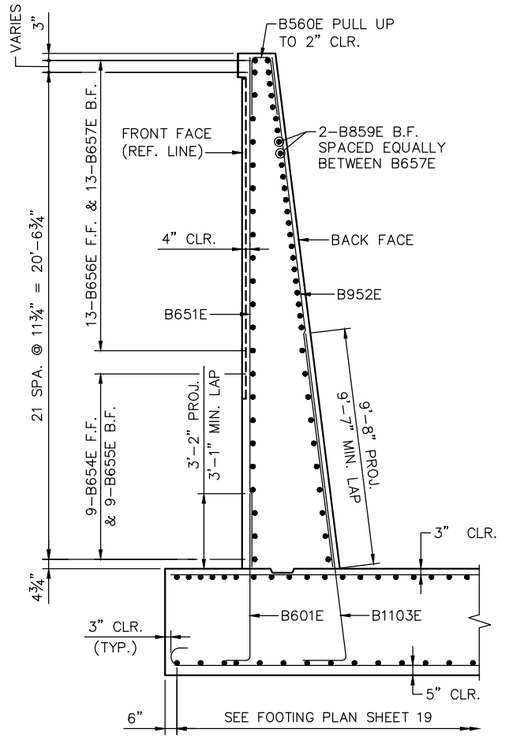

SECTION B–B

NOTES:

F.F. DENOTES FRONT FACE
B.F. DENOTES BACK FACE
E.F. DENOTES EACH FACE

SEE SHEET 23 FOR SECTIONS C–C & D–D.

SEE SHEET 24 FOR SECTION E–E.

(1) SPACED WITH FOOTING DOWELS.

DRAFT-WORK IN PROCESS

NO.	DATE	BY	CHECK	DESIGN	REVISION / SUBMITTAL

DESIGNED BY: KAE | CHECKED BY: MDJ
DRAWN BY: LMT | CHECKED BY: MDJ

AECOM Kimley»Horn

90% SUBMISSION - 01/22/16

METROPOLITAN COUNCIL

SOUTHWEST Green Line LRT Extension

CIVIL - VOLUME 4F
TH 100 FREIGHT RAIL BRIDGE
BRIDGE 27W34
EAST ABUTMENT REINFORCEMENT 4

DISCIPLINE: STRUCTURES

SHEET NAME: CBR27W34-BRG-ABT-002-8

SHEET 22 OF 68

Dec, 11 2015 11:19 am V:\3400_ADC\CAD\SEGMENT E2\PLAN SHEETS\STRUCTURES\T100-FRT\CBR27W34-BRG-ABT-002.dwg By: Katie.Ellis

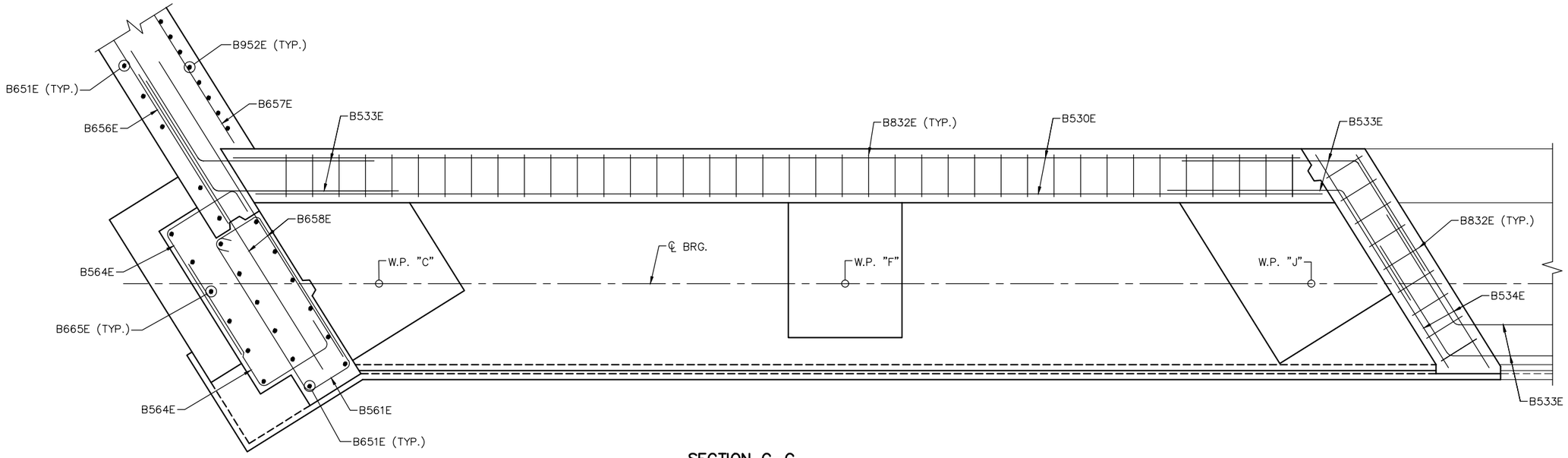

SECTION C–C

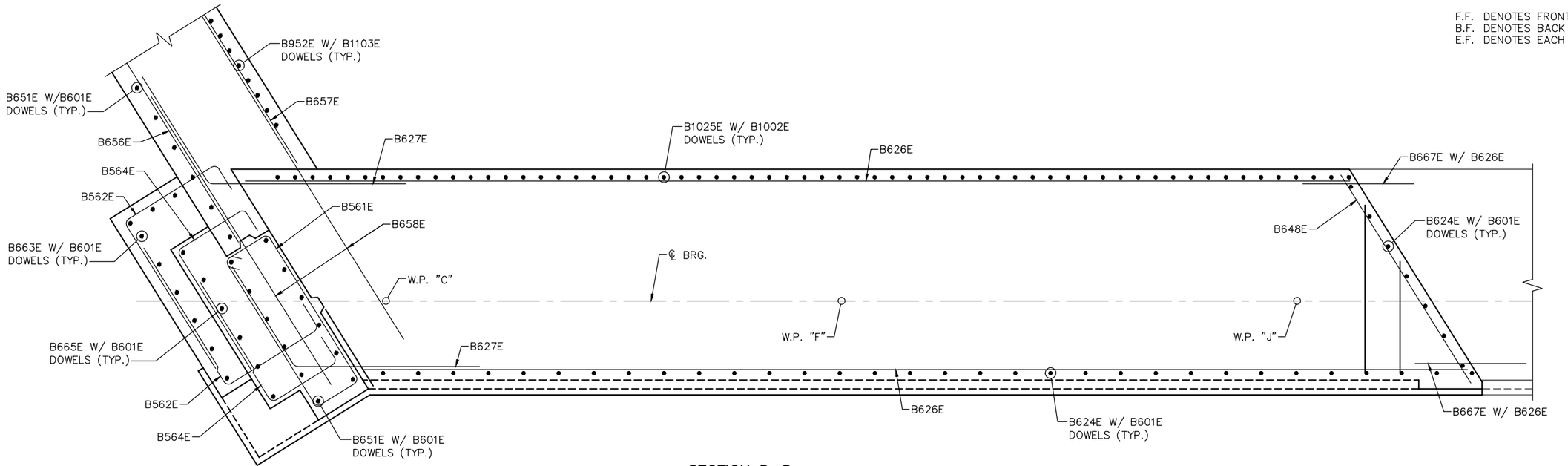

SECTION D–D

NOTES:

F.F. DENOTES FRONT FACE
B.F. DENOTES BACK FACE
E.F. DENOTES EACH FACE

DRAFT-WORK IN PROCESS

NO.	DATE	BY	CHECK	DESIGN	REVISION / SUBMITTAL

DESIGNED BY: KAE | CHECKED BY: MDJ
DRAWN BY: LMT | CHECKED BY: MDJ

AECOM Kimley»Horn

90% SUBMISSION - 01/22/16

METROPOLITAN COUNCIL

SOUTHWEST Green Line LRT Extension

CIVIL - VOLUME 4F
TH 100 FREIGHT RAIL BRIDGE
BRIDGE 27W34
EAST ABUTMENT REINFORCEMENT 5

DISCIPLINE: STRUCTURES
SHEET NAME: CBR27W34-BRG-ABT-002-9

SHEET 23 OF 68

Dec, 11 2015 11:19 am V:\3400_ADC\CAD\SEGMENT E2\PLAN SHEETS\STRUCTURES\T100-FRT\CBR27W34-BRG-ABT-002.dwg By: Katie.Ellis

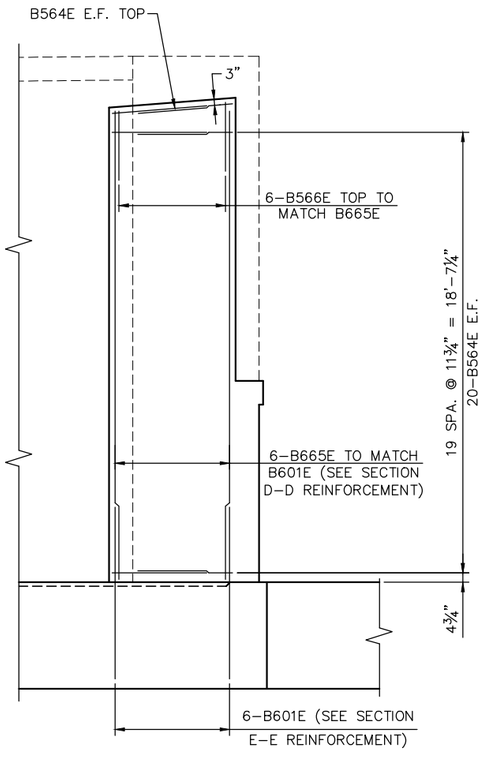

MIDDLE PILLAR ELEVATION ①

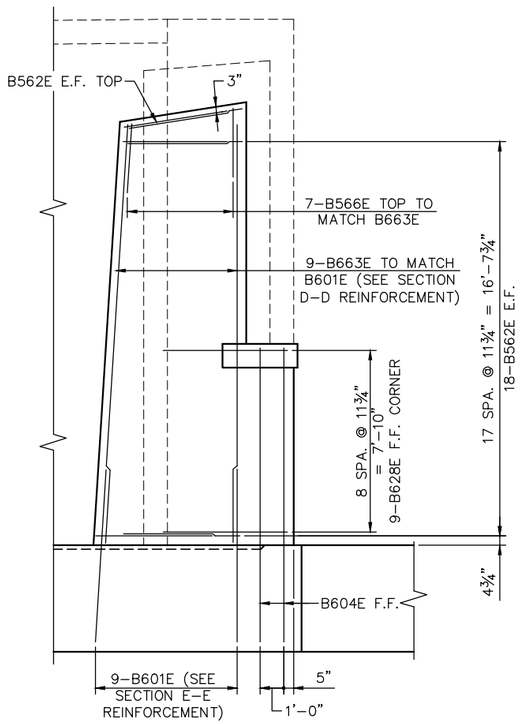

OUTER PILLAR ELEVATION ①

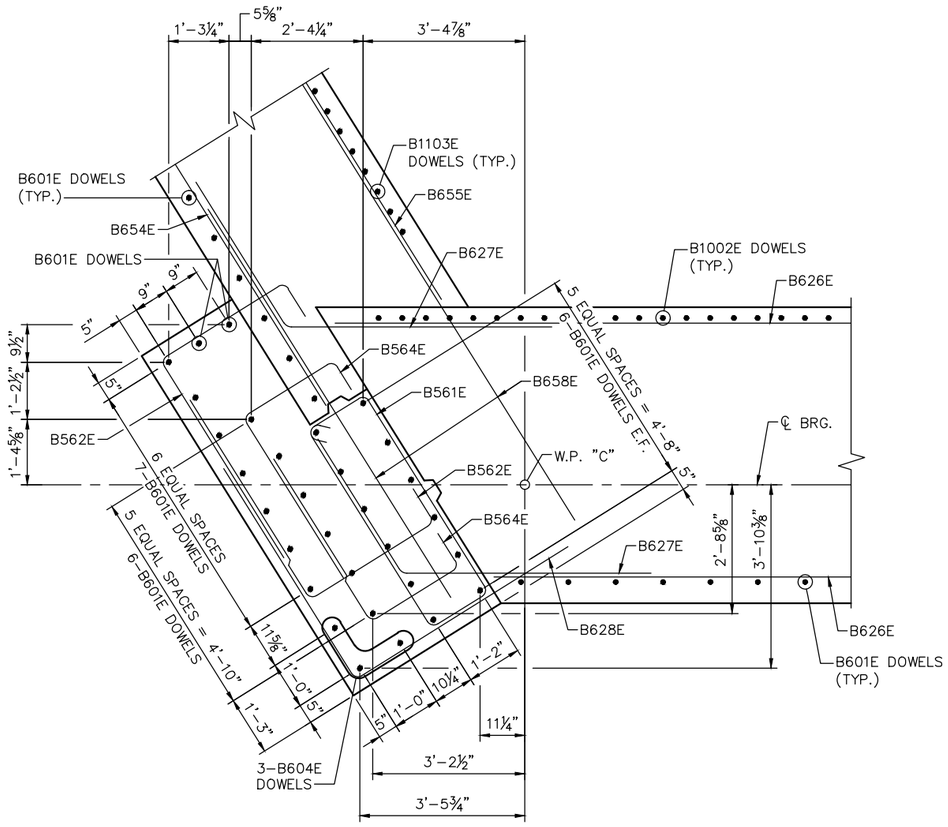

SECTION E–E
(TYPICAL VERTICAL BARS NOT SHOWN FOR CLARITY)

NOTES:

F.F. DENOTES FRONT FACE
B.F. DENOTES BACK FACE
E.F. DENOTES EACH FACE

SEE SHEET 20 FOR LOCATION OF SECTION E–E.

① SEE SHEET 22 FOR LOCATION.

DRAFT-WORK IN PROCESS

NO.	DATE	BY	CHECK	DESIGN	REVISION / SUBMITTAL

DESIGNED BY: KAE CHECKED BY: MDJ
DRAWN BY: LMT CHECKED BY: MDJ

AECOM Kimley»Horn

90% SUBMISSION - 01/22/16

METROPOLITAN COUNCIL

SOUTHWEST Green Line LRT Extension

CIVIL - VOLUME 4F
TH 100 FREIGHT RAIL BRIDGE
BRIDGE 27W34
EAST ABUTMENT REINFORCEMENT 6

DISCIPLINE: STRUCTURES
SHEET NAME: CBR27W34-BRG-ABT-002-10

SHEET 24 OF 68

Dec, 11 2015 11:20 am V:\3400_ADC\CAD\SEGMENT E2\PLAN SHEETS\STRUCTURES\T100-FRT\CBR27W34-BRG-ABT-002.dwg By: Katie.Ellis

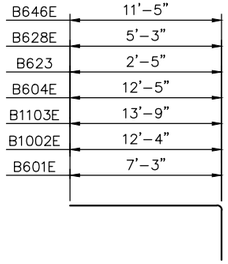

B601E, B1002E, B1103E, B604E, B623, B628E, & B646E

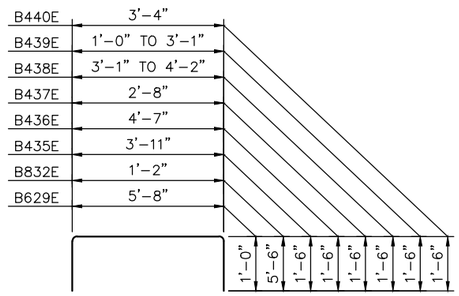

B629E, B832E, B435E, B436E, B437E, B438E, B439E, & B440E

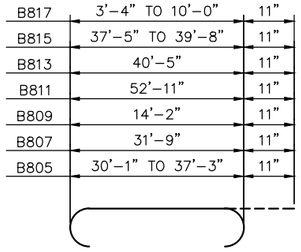

B805, B807, B809, B811, B813, B815 & B817

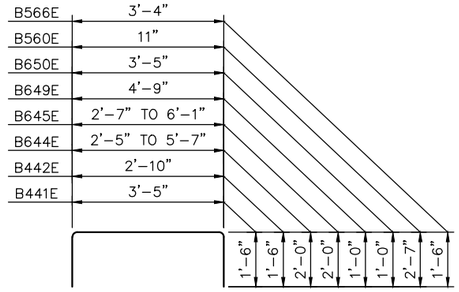

B441E, B442E, B644E, B645E, B649E, B650E, 6560E, & B566E

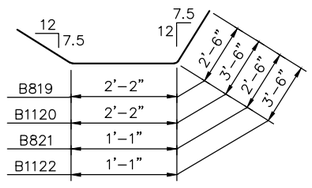

B819, B1120, B821, & B1122

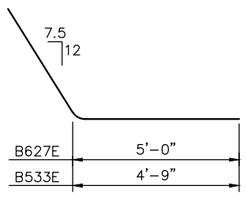

B627E & B533E

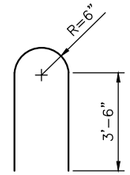

B531E

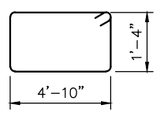

B561E

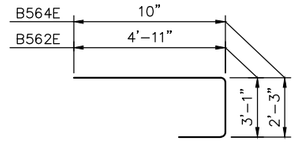

B562E & B564E

BILL OF REINFORCEMENT FOR EAST ABUTMENT

BAR	NO.	LENGTH	SHAPE	LOCATION
B601E	129	8'-3"	BENT	FOOTING, DOWEL F.F.
B1002E	94	14'-2"	BENT	FOOTING, DOWEL B.F.
B1103E	45	15'-9"	BENT	FOOTING, DOWEL
B604E	3	13'-5"	BENT	FOOTING, DOWEL
B805	1 SERIES OF 13	31'-11" TO 39'-1"	BENT	FOOTING, HORZ. BOT.
B1106	1 SERIES OF 17	30'-1" TO 37'-3"	STR.	FOOTING, HORZ. TOP
B807	23	41'-7"	BENT	FOOTING, HORZ. BOT.
B1108	30	31'-9"	STR.	FOOTING, HORZ. TOP
B809	11	16'-0"	BENT	FOOTING, HORZ. BOT.
B1110	14	14'-2"	BENT	FOOTING, HORZ. TOP
B811	24	54'-9"	BENT	FOOTING, HORZ. BOT.
B1112	24	52'-11"	STR.	FOOTING, HORZ. TOP
B813	27	42'-3"	BENT	FOOTING, HORZ. BOT.
B1114	27	40'-5"	STR.	FOOTING, HORZ. TOP
B815	1 SERIES OF 3	39'-3" TO 41'-6"	BENT	FOOTING, HORZ. BOT.
B1116	1 SERIES OF 3	37'-5" TO 39'-8"	STR.	FOOTING, HORZ. TOP
B817	1 SERIES OF 7	5'-2" TO 11'-10"	BENT	FOOTING, HORZ. BOT.
B1118	1 SERIES OF 7	3'-4" TO 10'-0"	STR.	FOOTING, HORZ. TOP
B819	1	7'-2"	BENT	FOOTING, HORZ. BOT.
B1120	1	9'-2"	BENT	FOOTING, HORZ. TOP
B821	1	6'-1"	BENT	FOOTING, HORZ. BOT.
B1122	1	8'-1"	BENT	FOOTING, HORZ. TOP
B623	2	4'-10"	BENT	FOOTING, HORZ. TOP & BOT.
B624E	39	16'-0"	STR.	STEM, VERT. F.F.
B1025E	62	16'-0"	STR.	STEM, VERT. B.F.
B626E	37	31'-5"	STR.	STEM, HORZ. E.F.
B627E	34	8'-6"	BENT	STEM, TIE E.F.
B628E	9	10'-6"	BENT	STEM, TIE
B629E	29	7'-8"	BENT	STEM, TIE
B530E	8	29'-8"	STR.	BACKWALL, HORZ. E.F.
B531E	39	8'-7"	BENT	BACKWALL, TIE
B832E	48	12'-2"	BENT	BACKWALL, TIE
B533E	24	8'-3"	BENT	BACKWALL, TIE
B534E	8	6'-11"	STR.	BACKWALL, HORZ. E.F.

BILL OF REINFORCEMENT FOR EAST ABUTMENT

BAR	NO.	LENGTH	SHAPE	LOCATION
B435E	2	5'-5"	BENT	BRIDGE SEAT, TIE
B436E	2	7'-7"	BENT	BRIDGE SEAT, TIE
B437E	2	5'-8"	BENT	BRIDGE SEAT, TIE
B438E	2 SERIES OF 4	6'-1" TO 7'-2"	BENT	BRIDGE SEAT, TIE
B439E	2 SERIES OF 3	4'-0" TO 6'-1"	BENT	BRIDGE SEAT, TIE
B440E	8	6'-4"	BENT	BRIDGE SEAT, TIE
B441E	5	6'-5"	BENT	BRIDGE SEAT, TIE
B442E	5	5'-10"	BENT	BRIDGE SEAT, TIE
B643E	15	18'-9"	STR.	APPROACH BLOCK, VERT.
B644E	1 SERIES OF 7	6'-5" TO 9'-7"	BENT	APPROACH BLOCK, TIE
B645E	1 SERIES OF 5	6'-7" TO 10'-1"	BENT	APPROACH BLOCK, TIE
B646E	19	18'-6"	BENT	APPROACH BLOCK, TIE
B547E	6	5'-7"	STR.	BACKWALL, CORNER
B648E	17	6'-11"	STR.	STEM, HORZ.
B649E	1	6'-9"	BENT	STEM, TOP
B650E	1	5'-2"	BENT	STEM, TOP
B651E	37	15'-8"	STR.	WINGWALL, VERT. F.F.
B952E	45	15'-8"	STR.	WINGWALL, VERT. B.F.
B653E	24	11'-8"	STR.	WINGWALL, VERT. E.F.
B654E	10	24'-4"	STR.	WINGWALL, HORZ. F.F.
B655E	10	23'-7"	STR.	WINGWALL, HORZ. B.F.
B656E	13	36'-4"	STR.	WINGWALL, HORZ. F.F.
B657E	13	35'-4"	STR.	WINGWALL, HORZ. B.F.
B658E	23	10'-0"	STR.	WINGWALL, HORZ.
B859E	48	17'-7"	STR.	WINGWALL, HORZ. B.F.
B560E	43	6'-1"	BENT	WINGWALL, TOP
B561E	23	12'-4"	BENT	WINGWALL, STIRRUP
B562E	38	8'-10"	BENT	PILLAR, TIE
B663E	9	17'-7"	STR.	PILLAR, VERT.
B564E	42	7'-1"	BENT	PILLAR, TIE
B665E	6	19'-9"	STR.	PILLAR, VERT.
B566E	13	6'-4"	BENT	PILLAR, TIE TOP
B667E	32	6'-6"	STR.	STEM CONSTRUCTION JT.
B668E	5	3'-10"	STR.	EX. FOOTING DOWEL F.F.
B1069E	11	8'-11"	STR.	EX. FOOTING DOWEL B.F.

DRAFT-WORK IN PROCESS

NO.	DATE	BY	CHECK	DESIGN	REVISION / SUBMITTAL

DESIGNED BY: KAE CHECKED BY: MDJ
DRAWN BY: LMT CHECKED BY: MDJ

AECOM Kimley»Horn

90% SUBMISSION - 01/22/16

METROPOLITAN COUNCIL

SOUTHWEST Green Line LRT Extension

CIVIL - VOLUME 4F
TH 100 FREIGHT RAIL BRIDGE
BRIDGE 27W34
EAST ABUTMENT REINFORCEMENT 7

DISCIPLINE: STRUCTURES
SHEET NAME: CBR27W34-BRG-ABT-002-11

SHEET 25 OF 68

Dec, 11 2015 11:20 am V:\3400_ADC\CAD\SEGMENT E2\PLAN SHEETS\STRUCTURES\T100-FRT\CBR27W34-BRG-ABT-002.dwg By: Katie.Ellis

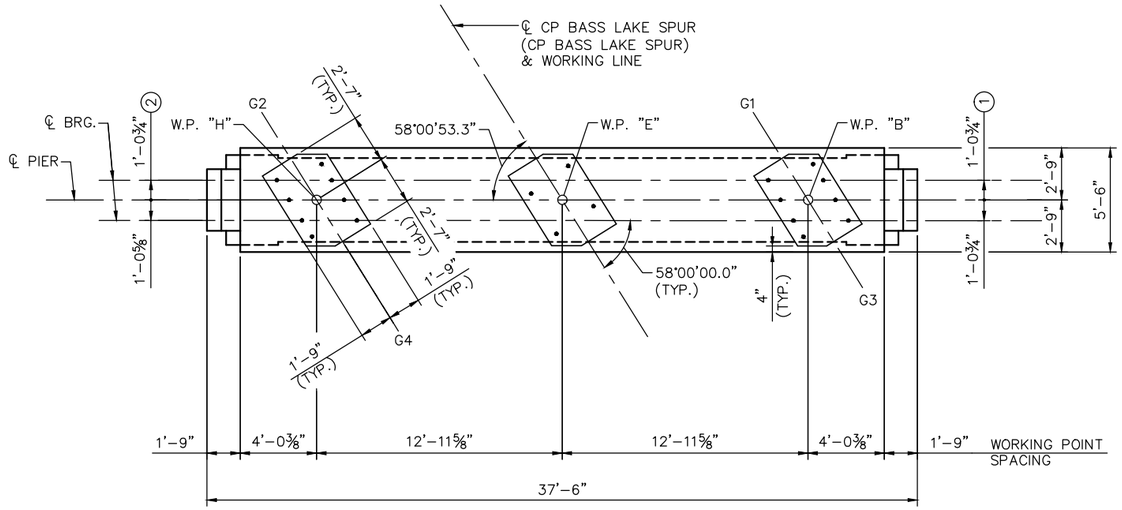

PIER PLAN

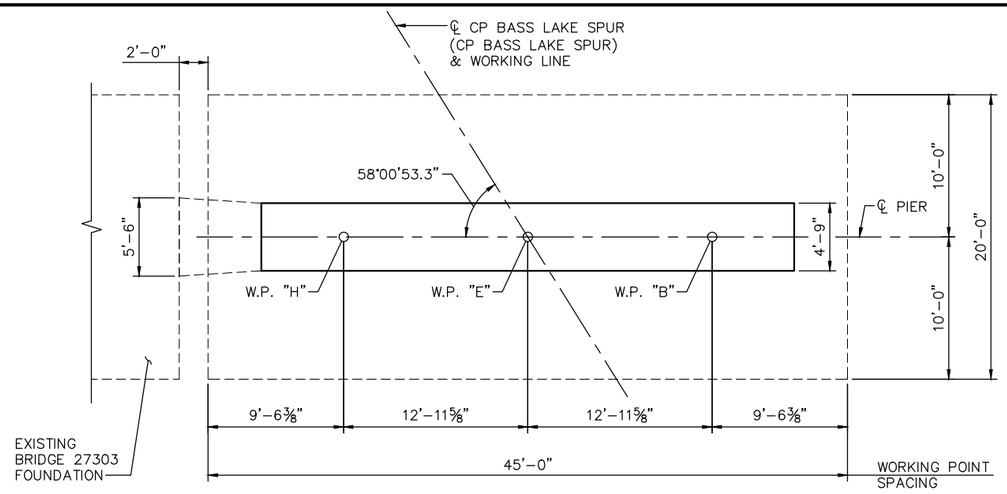

EXISTING FOOTING PLAN

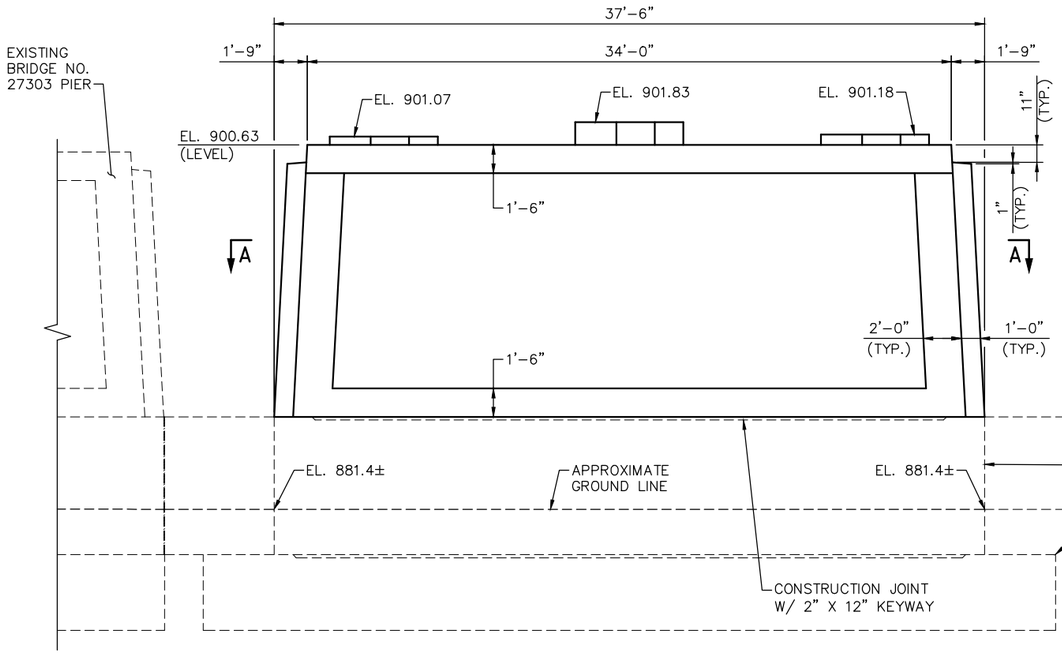

ELEVATION

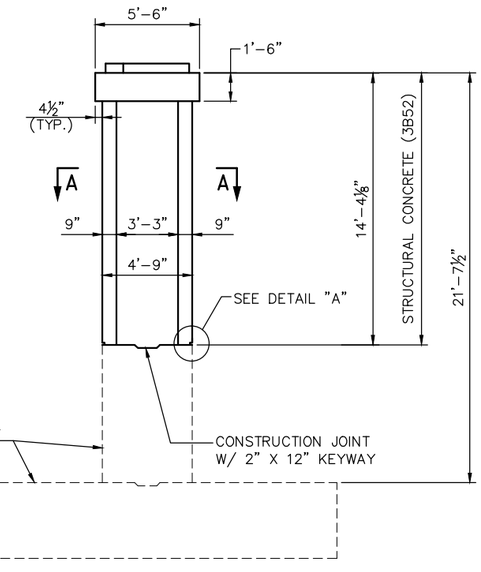

END ELEVATION

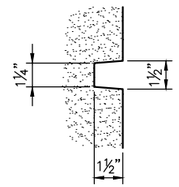

DETAIL "A"

NOTES:

1. MEASURED AT W.P. "B"
2. MEASURED AT W.P. "H"
3. TAPER AS REQUIRED TO MATCH EXISTING.

SEE SHEET 27 FOR SECTION A–A AND ANCHOR BOLT LAYOUT.

DRAFT-WORK IN PROCESS

NO.	DATE	BY	CHECK	DESIGN	REVISION / SUBMITTAL

DESIGNED BY: KAE | CHECKED BY: MDJ
DRAWN BY: LMT | CHECKED BY: MDJ

AECOM Kimley»Horn

90% SUBMISSION - 01/22/16

METROPOLITAN COUNCIL

SOUTHWEST Green Line LRT Extension

CIVIL - VOLUME 4F
TH 100 FREIGHT RAIL BRIDGE
BRIDGE 27W34
PIER DETAILS 1

DISCIPLINE: STRUCTURES
SHEET NAME: CBR27W34-BRG-PIR-001-1

SHEET 26 OF 68

Dec, 11 2015 11:20 am V:\3400_ADC\CAD\SEGMENT E2\PLAN SHEETS\STRUCTURES\T100-FRT\CBR27W34-BRG-PIR-001.dwg By: Katie.Ellis

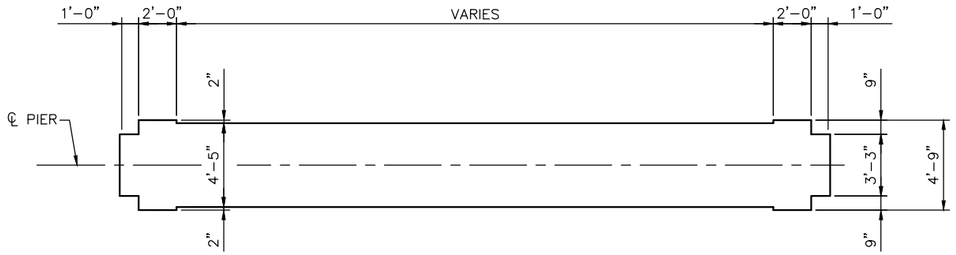

SECTION A–A

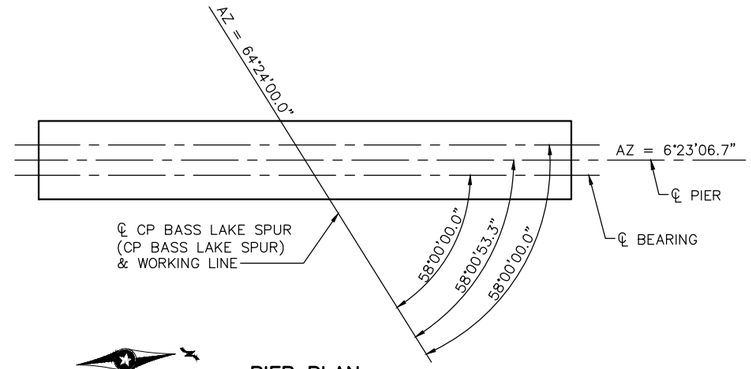

PIER PLAN

℄ BEARING IS NOT PARALLEL TO THE ℄ OF PIER

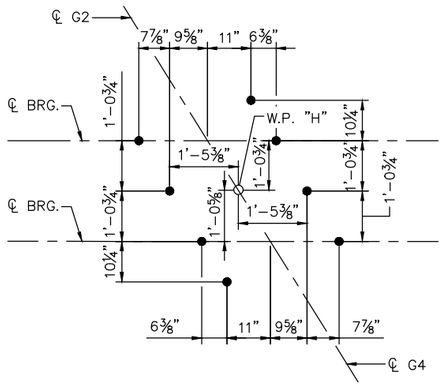

ANCHOR BOLT LAYOUT
(BEARING F1)

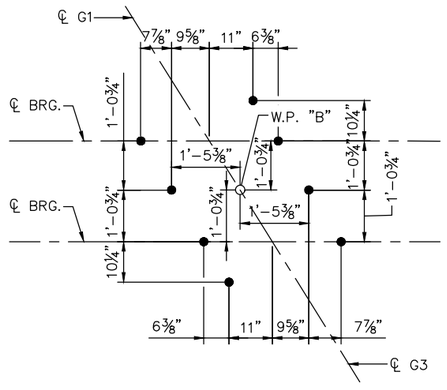

ANCHOR BOLT LAYOUT
(BEARING F2)

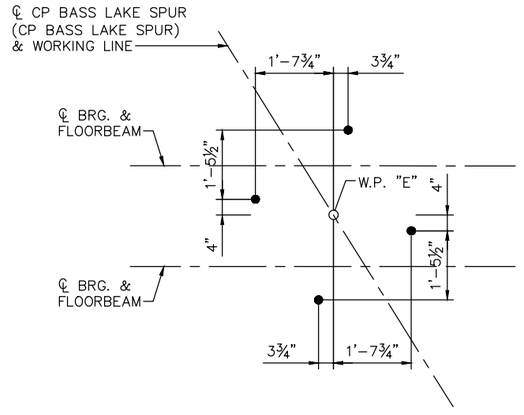

ANCHOR BOLT LAYOUT
(BEARING E2)

DRAFT-WORK IN PROCESS

NO.	DATE	BY	CHECK	DESIGN	REVISION / SUBMITTAL

DESIGNED BY: KAE | CHECKED BY: MDJ
DRAWN BY: LMT | CHECKED BY: MDJ

AECOM Kimley»Horn

90% SUBMISSION - 01/22/16

METROPOLITAN COUNCIL

SOUTHWEST Green Line LRT Extension

CIVIL - VOLUME 4F
TH 100 FREIGHT RAIL BRIDGE
BRIDGE 27W34
PIER DETAILS 2

DISCIPLINE: STRUCTURES

SHEET NAME: CBR27W34-BRG-PIR-001-2

SHEET 27 OF 68

Dec, 11 2015 11:20 am V:\3400_ADC\CAD\SEGMENT E2\PLAN SHEETS\STRUCTURES\T100-FRT\CBR27W34-BRG-PIR-001.dwg By: Katie.Ellis

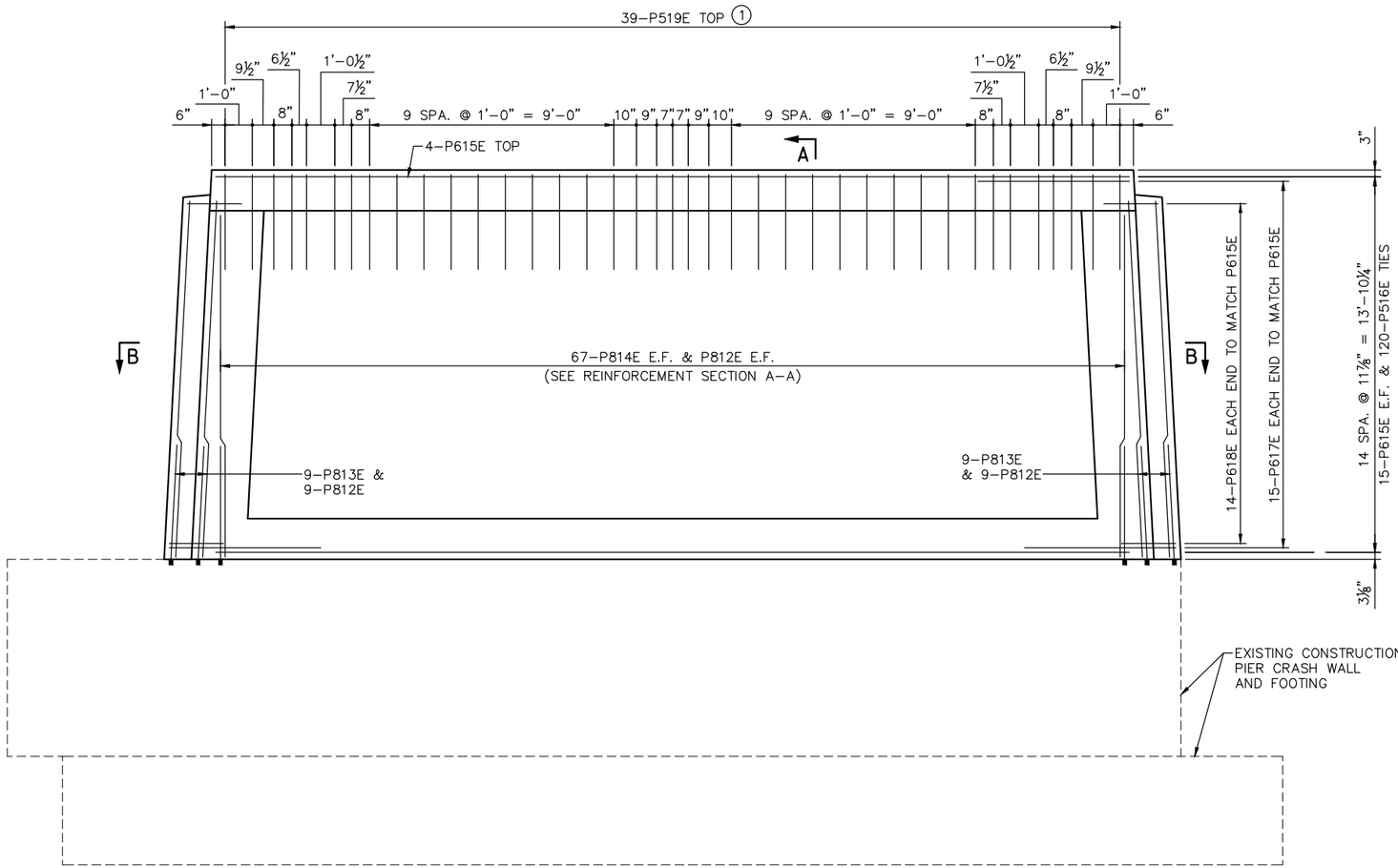

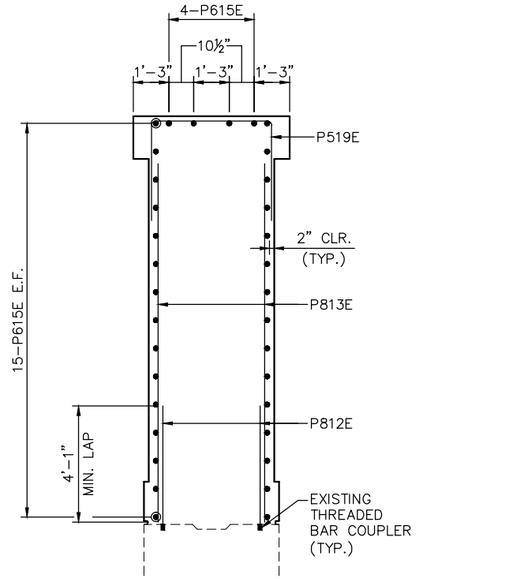

REINFORCEMENT ELEVATION

(LOOKING WEST)

REINFORCEMENT SECTION A–A

NOTES:

F.F. DENOTES FRONT FACE
B.F. DENOTES BACK FACE
E.F. DENOTES EACH FACE

SEE SHEET 29 FOR SECTION B–B.

(1) CAREFULLY PLACE REINFORCEMENT TO AVOID INTERFERENCE WITH DRILLING HOLES FOR ANCHOR BOLTS.

DRAFT-WORK IN PROCESS

NO.	DATE	BY	CHECK	DESIGN	REVISION / SUBMITTAL

DESIGNED BY: KAE CHECKED BY: MDJ
DRAWN BY: LMT CHECKED BY: MDJ

AECOM Kimley»Horn

90% SUBMISSION - 01/22/16

METROPOLITAN COUNCIL

SOUTHWEST Green Line LRT Extension

CIVIL - VOLUME 4F
TH 100 FREIGHT RAIL BRIDGE
BRIDGE 27W34
PIER REINFORCEMENT 1

DISCIPLINE: STRUCTURES
SHEET NAME: CBR27W34-BRG-PIR-002-1

SHEET 28 OF 68

Dec, 11 2015 11:20 am V:\3400_ADC\CAD\SEGMENT E2\PLAN SHEETS\STRUCTURES\T100-FRT\CBR27W34-BRG-PIR-002.dwg By: Katie.Ellis

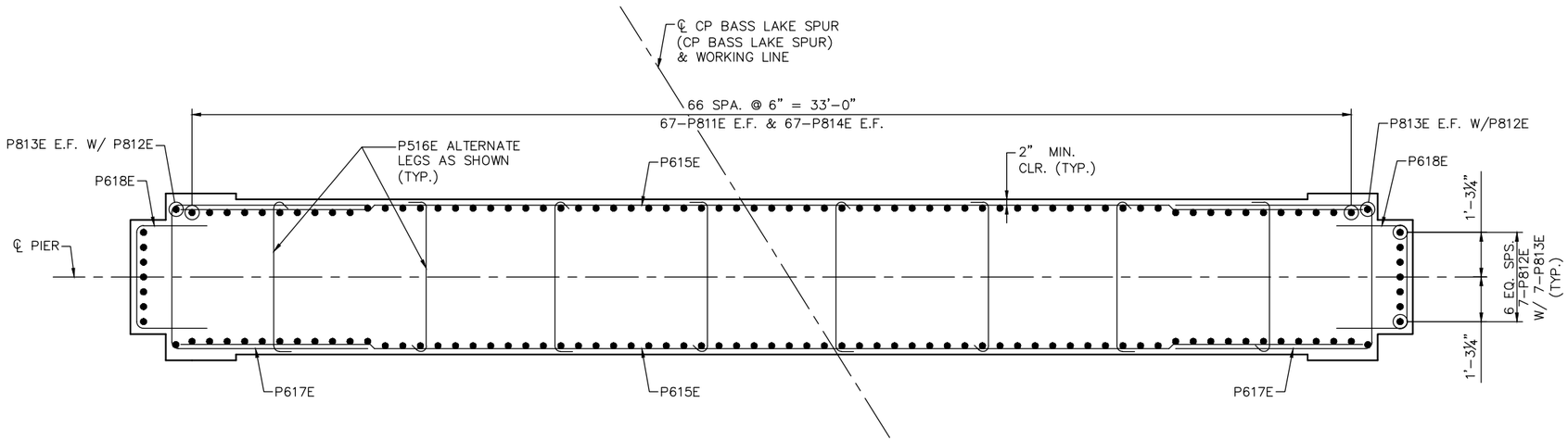

REINFORCEMENT SECTION B–B

BILL OF REINFORCEMENT FOR PIER				
BAR	NO.	LENGTH	SHAPE	LOCATION
P812E	152	4'-2"	STR.	STEM, VERTICAL
P813E	18	13'-2"	STR.	STEM, VERTICAL
P814E	134	12'-8"	STR.	STEM, VERTICAL
P615E	30	33'-8"	STR.	STEM, HORIZONTAL
P516E	120	4'-7"	BENT	STEM, STIRRUP
P617E	30	15'-3"	BENT	STEM, END TIE
P618E	28	6'-11"	BENT	STEM, END TIE
P519E	39	10'-11"	BENT	STEM, TOP TIE
P420E	6	7'-7"	BENT	PEDESTAL, TIE
P421E	6	9'-7"	BENT	PEDESTAL, TIE
P422E	6	7'-0"	BENT	PEDESTAL, TIE
P423E	6	10'-3"	BENT	PEDESTAL, TIE
P424E	17	8'-8"	BENT	PEDESTAL, TIE

NOTE: BAR MARKS BEGIN AT P812E

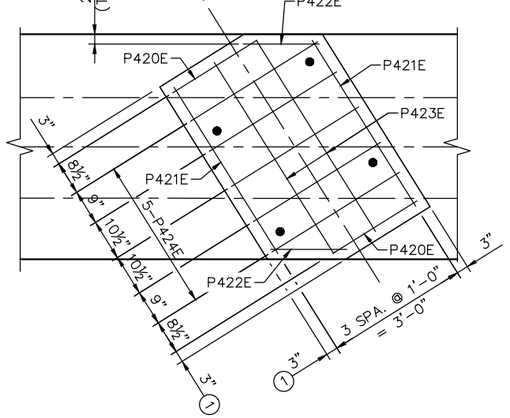

BRIDGE SEAT REINFORCEMENT
(BEARING E2)

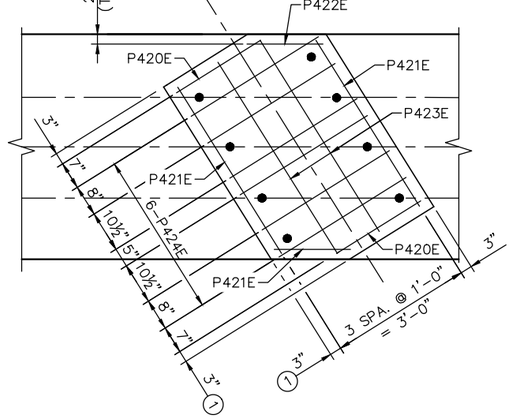

BRIDGE SEAT REINFORCEMENT
(BEARING F1 & F2)

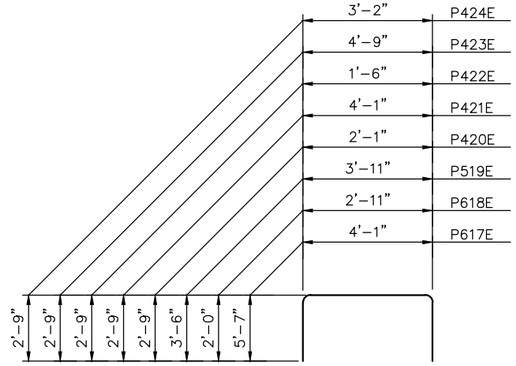

P617E, P618E, P519E, P420E,
P421E, P422E, P423E P424E

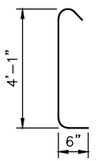

P516E

NOTES:

F.F. DENOTES FRONT FACE
B.F. DENOTES BACK FACE
E.F. DENOTES EACH FACE

(1) CAREFULLY PLACE REINFORCEMENT TO AVOID INTERFERENCE WITH DRILLING HOLES FOR ANCHOR BOLTS.

DRAFT-WORK IN PROCESS

NO.	DATE	BY	CHECK	DESIGN	REVISION / SUBMITTAL

DESIGNED BY: KAE CHECKED BY: MDJ
DRAWN BY: LMT CHECKED BY: MDJ

AECOM Kimley»Horn

90% SUBMISSION - 01/22/16

METROPOLITAN COUNCIL

SOUTHWEST Green Line LRT Extension

CIVIL - VOLUME 4F
TH 100 FREIGHT RAIL BRIDGE
BRIDGE 27W34
PIER REINFORCEMENT 2

DISCIPLINE: STRUCTURES
SHEET NAME: CBR27W34-BRG-PIR-002-2

SHEET 29 OF 68

Dec, 11 2015 11:20 am V:\3400_ADC\CAD\SEGMENT E2\PLAN SHEETS\STRUCTURES\T100-FRT\CBR27W34-BRG-PIR-002.dwg By: Katie.Ellis

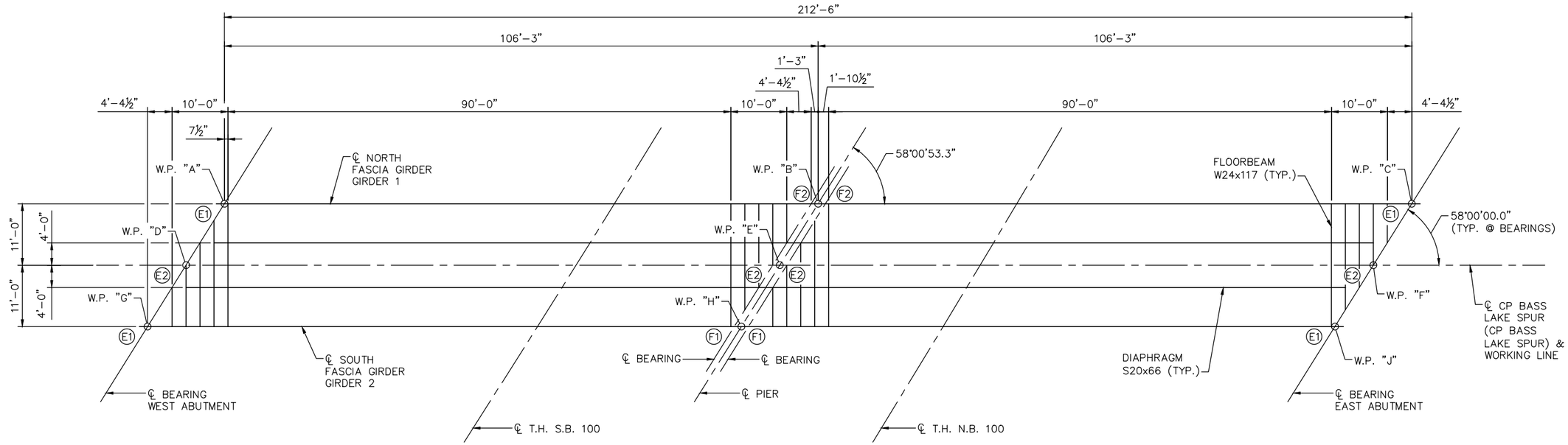

FRAMING PLAN ①

NOTES:

(E1) DENOTES EXPANSION BEARING ASSEMBLY TYPE 1. RELOCATE EXISTING BEARING.

(E2) DENOTES EXPANSION BEARING ASSEMBLY TYPE 2. RELOCATE EXISTING BEARING.

(F1) DENOTES FIXED BEARING ASSEMBLY TYPE 1. RELOCATE EXISTING BEARING.

(1) FRAMING PLAN IS FOR INFORMATION ONLY. THE CONTRACTOR SHALL VERIFY STRUCTURAL DETAILS AND MEMBER CAPACITIES PRIOR TO RELOCATING EXISTING BRIDGE NO. 27303 SUPERSTRUCTURE AND BEARINGS.

THE WALK PLATE AND SUPPORT PLATES EMBEDDED INTO THE ABUTMENT SHALL MEET MnDOT 3306 AND SHALL BE GALVANIZED PER MnDOT 3394.

ALL BOLTED CONNECTIONS SHALL BE MADE WITH ⅞" DIAMETER A325 BOLTS, EXCEPT AS NOTED.

THE MINIMUM EDGE DISTANCE TO THE ℄ OF ALL FASTENERS WILL BE 1½" UNLESS NOTED OTHERWISE.

NO WELDING OR DRILLED HOLES FOR TEMPORARY ATTACHMENTS TO THE GIRDERS WILL BE PERMITTED.

PLACE NUT AND WASHER ON INSIDE OF GIRDER FOR ALL BOLTS THROUGH GIRDER WEB.

DRAFT-WORK IN PROCESS

NO.	DATE	BY	CHECK	DESIGN	REVISION / SUBMITTAL

DESIGNED BY: KAE CHECKED BY: MDJ
DRAWN BY: LMT CHECKED BY: MDJ

AECOM Kimley»Horn

90% SUBMISSION - 01/22/16

METROPOLITAN COUNCIL

SOUTHWEST Green Line LRT Extension

CIVIL - VOLUME 4F
TH 100 FREIGHT RAIL BRIDGE
BRIDGE 27W34
FRAMING PLAN

DISCIPLINE: STRUCTURES
SHEET NAME: CBR27W34-BRG-SUP-002-1

SHEET 30 OF 68

Dec, 11 2015 11:21 am V:\3400_ADC\CAD\SEGMENT E2\PLAN SHEETS\STRUCTURES\T100-FRT\CBR27W34-BRG-SUP-002.dwg By: Katie.Ellis

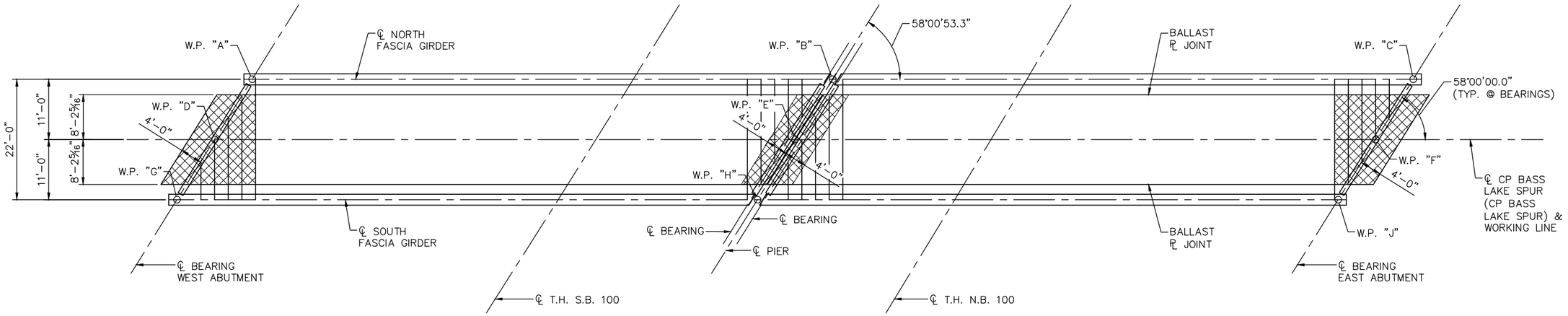

BALLAST AND WATERPROOFING SYSTEM REMOVAL PLAN

NOTES:

CONTRACTOR TO DETERMINE REQUIRED LIMITS OF TRACK COMPONENTS, BALLAST, WATERPROOFING SYSTEM, DRAINAGE SYSTEM REMOVALS, AND FIBER OPTIC CABLE RELOCATION TO FACILITATE SUPERSTRUCTURE RELOCATION. SEE STAGING PLAN 2 AND SPECIAL PROVISIONS.

LEGEND

REMOVE AND REINSTALL EXISTING BALLAST AND WATERPROOFING SYSTEM

DRAFT-WORK IN PROCESS

NO.	DATE	BY	CHECK	DESIGN	REVISION / SUBMITTAL

DESIGNED BY: KAE | CHECKED BY: MDJ
DRAWN BY: LMT | CHECKED BY: MDJ

AECOM Kimley»Horn

90% SUBMISSION - 01/22/16

METROPOLITAN COUNCIL

SOUTHWEST Green Line LRT Extension

CIVIL - VOLUME 4F
TH 100 FREIGHT RAIL BRIDGE
BRIDGE 27W34
BALLAST PLATE REMOVAL PLAN

DISCIPLINE: STRUCTURES

SHEET NAME: CBR27W34-BRG-SUP-002-2

SHEET 31 OF 68

Dec, 11 2015 11:21 am V:\3400_ADC\CAD\SEGMENT E2\PLAN SHEETS\STRUCTURES\T100-FRT\CBR27W34-BRG-SUP-002.dwg By: Katie.Ellis

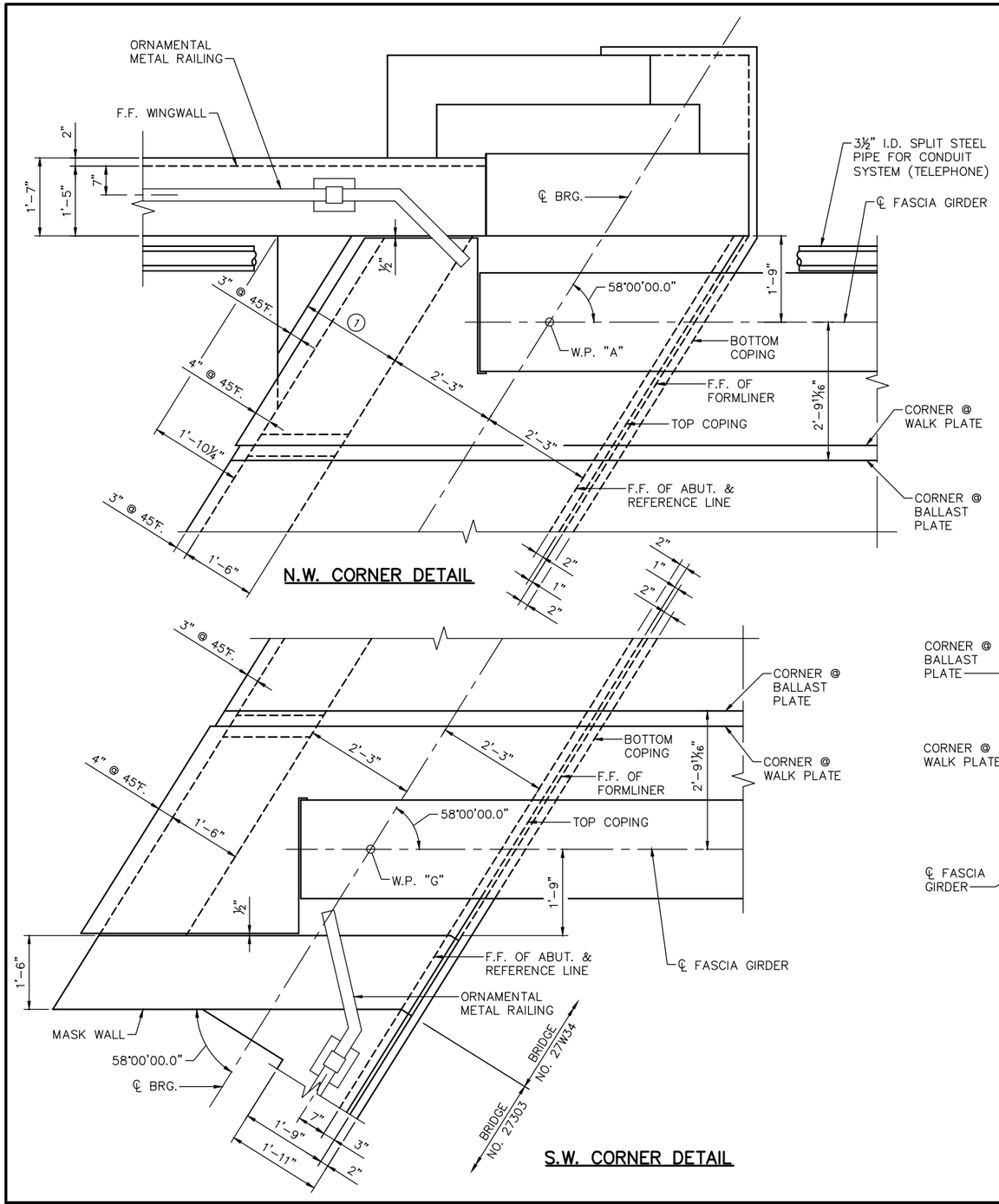

N.W. CORNER DETAIL

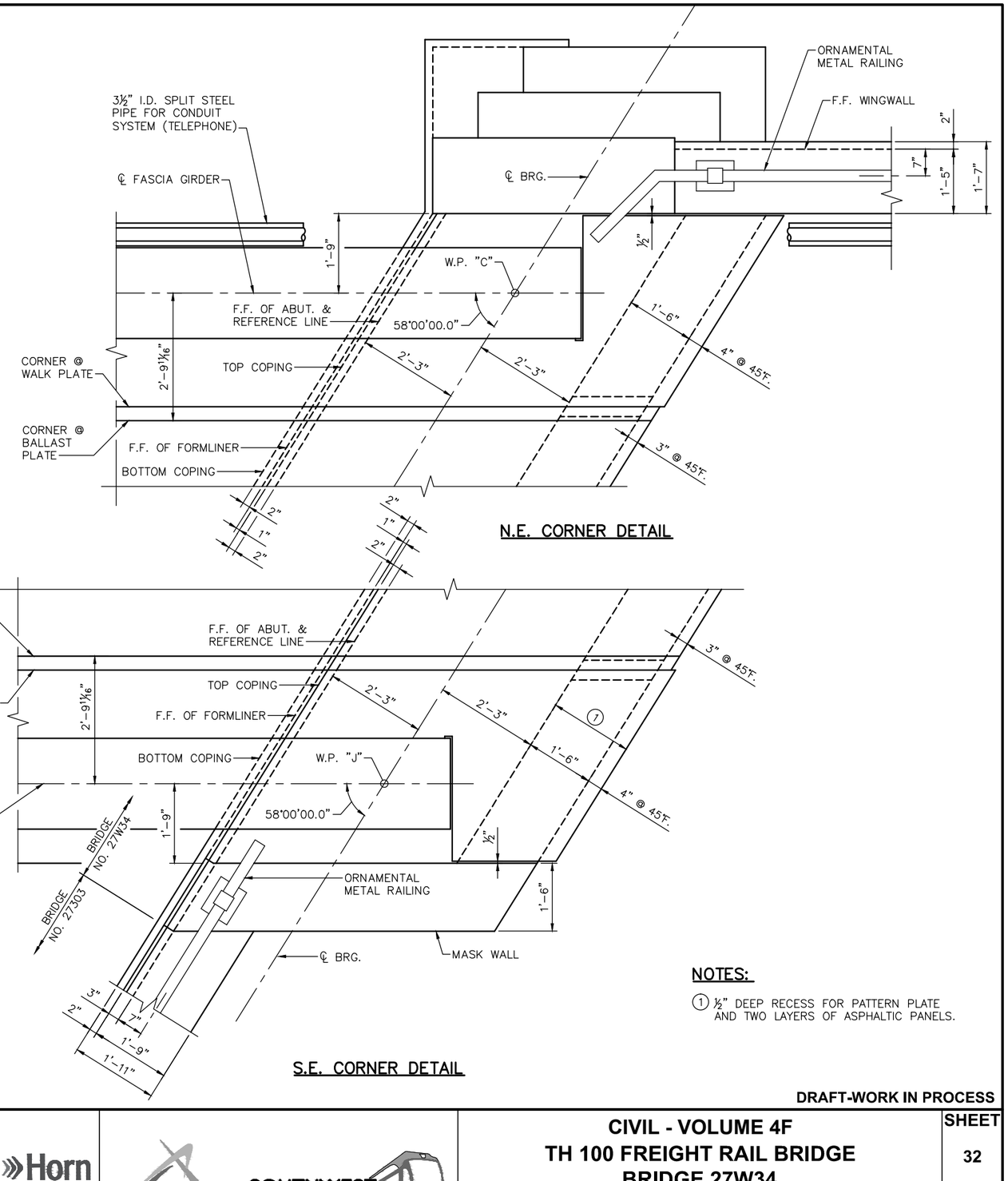

N.E. CORNER DETAIL

S.W. CORNER DETAIL

S.E. CORNER DETAIL

NOTES:

① ½" DEEP RECESS FOR PATTERN PLATE AND TWO LAYERS OF ASPHALTIC PANELS.

DRAFT-WORK IN PROCESS

NO.	DATE	BY	CHECK	DESIGN	REVISION / SUBMITTAL

DESIGNED BY: KAE | CHECKED BY: MDJ
DRAWN BY: LMT | CHECKED BY: MDJ

AECOM Kimley»Horn

90% SUBMISSION - 01/22/16

METROPOLITAN COUNCIL

SOUTHWEST Green Line LRT Extension

CIVIL - VOLUME 4F
TH 100 FREIGHT RAIL BRIDGE
BRIDGE 27W34
CORNER DETAILS

DISCIPLINE: STRUCTURES

SHEET NAME: CBR27W34-BRG-SUP-003

SHEET 32 OF 68

Dec, 11 2015 11:21 am V:\3400_ADC\CAD\SEGMENT E2\PLAN SHEETS\STRUCTURES\T100-FRT\CBR27W34-BRG-SUP-003.dwg By: Katie.Ellis

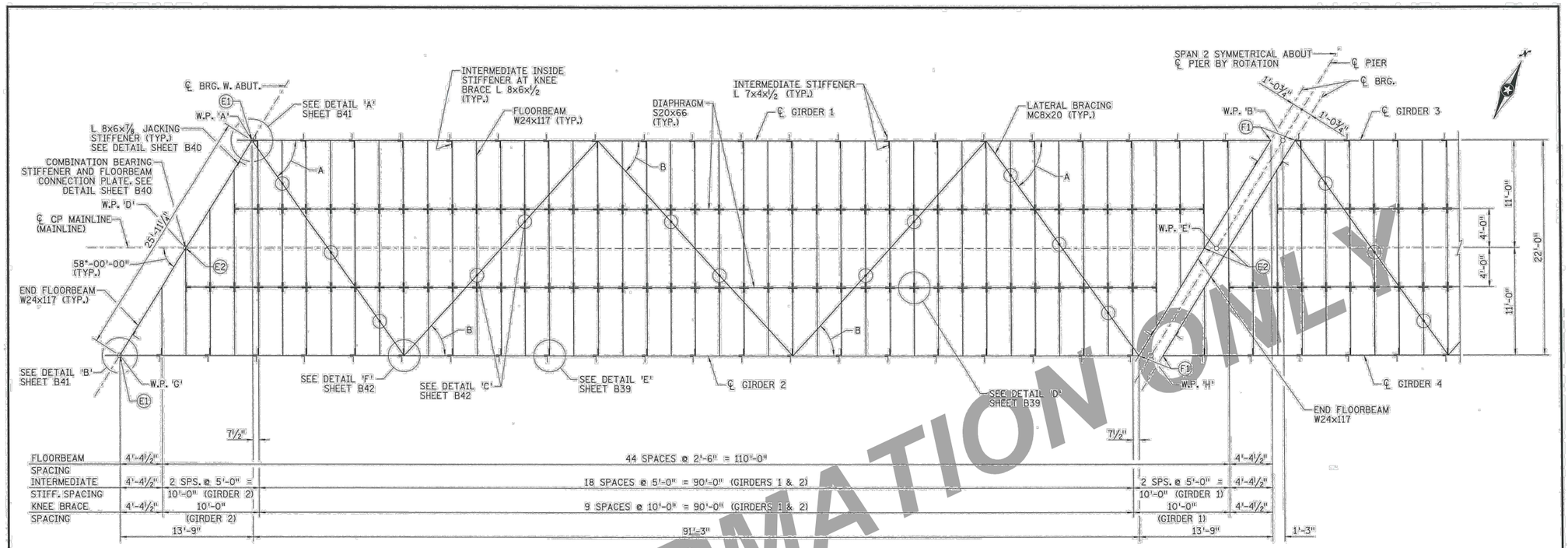

FRAMING PLAN

STRUCTURAL STEEL NOTES:

STEEL ELEMENTS DESIGNATED AS FRACTURE CRITICAL MEMBERS (F.C.M.) SHALL CONFORM TO ASTM A709 GRADE 50WF3. THE MATERIALS, WELDING, AND TESTING OF F.C.M.'S SHALL CONFORM TO THE SPECIFICATIONS GIVEN IN THE 2013 A.R.E.M.A. MANUAL; CHAPTER 15, SECTION 1.14. THE FLANGE PLATES OF THE MAIN GIRDERS SHALL BE NORMALIZED.

NON- GALVANIZED STEEL ELEMENTS NOT DESIGNATED AS F.C.M.'S SHALL CONFORM TO ASTM A709 GRADE 50WT3.

THE WALK PLATE AND SUPPORT PLATES EMBEDDED INTO THE ABUTMENT SHALL MEET MnDOT 3306 AND SHALL BE GALVANIZED PER MnDOT 3394. PAYMENT FOR PATTERN PLATE WILL BE INCLUDED IN WEIGHT OF STRUCTURAL STEEL (3309).

FULL ASSEMBLY WILL BE REQUIRED PER SPEC. 2471.3H1b AND 2471.3J2.

ALL BOLTED CONNECTIONS SHALL BE MADE WITH ⅞" DIAMETER A325 BOLTS, EXCEPT AS NOTED.

THE MINIMUM EDGE DISTANCE TO THE ℄ OF ALL FASTENERS WILL BE 1½" UNLESS NOTED OTHERWISE.

WEB PLATES SHALL BE FURNISHED IN AVILABLE MILL LENGTHS WITH A MINIMUM NUMBER OF WEB SPLICES. LOCATION OF SPLICES SHALL BE SUBJECT TO APPROVAL OF THE ENGINEER AND SHALL BE A MINIMUM OF 1'-0" FROM STIFFENERS OF FLANGE SPLICES.

FOR WELDED FLANGE SPLICES, SEE SPEC. 2471.3F1A.

THE SUBMERGED ARC WELDING (SAW) PROCESS SHALL BE USED FOR ALL FLANGE AND WEB SPLICES.

BEARING STIFFENERS, INTERMEDIATE STIFFENERS, AND ENDS OF GIRDERS SHALL BE PERPENDICULAR TO THE FLANGE.

SOLE PLATES SHALL BE SHOP WELDED TO THE BEAMS. SEE SHEET B47 FOR DETAILS.

NO WELDING OR DRILLED HOLES FOR TEMPORARY ATTACHMENTS TO THE GIRDERS WILL BE PERMITTED.

PLACE NUT AND WASHER ON INSIDE OF GIRDER FOR ALL BOLTS THROUGH GIRDER WEB.

AFTER CUTTING THE WEB FOR CAMBERING AND PRIOR TO WELDING FLANGES TO WEB, THE EDGE SURFACE VALUES OF BOTH FLANGE AND WEB PLATES SHALL NOT EXCEED 1000 AS DEFINED BY A.N.S.I. B46.1 SURFACE TEXTURE.

SUMMARY OF QUANTITIES : SUPERSTRUCTURE

	ITEM	UNIT	QUANTITY
1	RAILROAD TRACK BALLAST (CV)	CY	45
	STRUCTURAL STEEL (3309)	POUND	840600
2	FIXED SPHERICAL BEARING ASSEMBLY (TYPE 1)	EACH	4
2	EXPANSION SPHERICAL BEARING ASSEMBLY (TYPE 1)	EACH	4
2	EXPANSION SPHERICAL BEARING ASSEMBLY (TYPE 2)	EACH	4
	INORGANIC ZINC-RICH PAINT SYSTEM (SHOP)	SQ. FT.	16465
	INORGANIC ZINC-RICH PAINT SYSTEM (FIELD)	SQ. FT.	16465
	WATERPROOFING	SQ. FT.	4397
	DRAINAGE SYSTEM (BRIDGE DECK)	LUMP SUM	1

LATERAL BRACING ANGLES

ANGLE	MEASURE
A	54°-36'-51"
B	47°-43'-35"

NOTES:

1. THE CONTRACTOR WILL PLACE 4" OF BALLAST THAT IS SUPPLIED BY THE RAILWAY. REMAINING BALLAST, TIES AND TRACK WILL BE FURNISHED AND INSTALLED BY THE RAILWAY.
2. PAYMENT FOR BEARINGS INCLUDED IN ITEM "BEARING ASSEMBLY" PER EACH.

LEGEND:

- (F1) DENOTES FIXED BEARING ASSEMBLY TYPE 1, SEE SHEET B47.
- (E1) DENOTES EXPANSION BEARING ASSEMBLY TYPE 1, SEE SHEET B47.
- (E2) DENOTES EXPANSION BEARING ASSEMBLY TYPE 2, SEE SHEET B47.
- (*) DENOTES LATERAL BRACING CONNECTION TO FLOORBEAM, SEE DETAIL 'C' ON SHEET B42.

FOR INFORMATION ONLY

NO.	DATE	BY	CKD	APPR	REVISION
	03-24-14	JEH	LBR	JMB	

SRF Consulting Group, Inc. — Engineers Planners Designers

I hereby certify that this plan, specification, or report was prepared by me or under my direct supervision and that I am a duly Licensed Professional Engineer under the laws of the State of Minnesota.

JAMISON BEISSWENGER License # 44648 DATE 3/24/14

S.P. NO. 2734-27303 (TH100=005)

TITLE: FRAMING PLAN

DES: LBR DR: JEH APPROVED: 3/24/14
CHK: JMB CHK: LBR
SHEET NO. B37 OF B68 SHEETS

BRIDGE NO. 27303

DRAFT-WORK IN PROCESS

NO.	DATE	BY	CHECK	DESIGN	REVISION / SUBMITTAL

DESIGNED BY: KAE CHECKED BY: MDJ
DRAWN BY: LMT CHECKED BY: MDJ

AECOM Kimley»Horn

90% SUBMISSION - 01/22/16

METROPOLITAN COUNCIL

SOUTHWEST Green Line LRT Extension

CIVIL - VOLUME 4F
TH 100 FREIGHT RAIL BRIDGE
BRIDGE 27W34
SUPERSTRUCTURE DETAILS 1

DISCIPLINE: STRUCTURES
SHEET NAME: CBR27W34-BRG-REF-001-1

SHEET 33 OF 68

Dec, 11 2015 11:22 am V:\3400_ADC\CAD\SEGMENT E2\PLAN SHEETS\STRUCTURES\T100-FRT\CBR27W34-BRG-REF-001.dwg By: Katie.Ellis
BY14157 AM
H:\Projects\810\BR\Plans\Final\CBR27303_sup01.dgn
...\Plans\Final\CBR27303_sup01.dgn

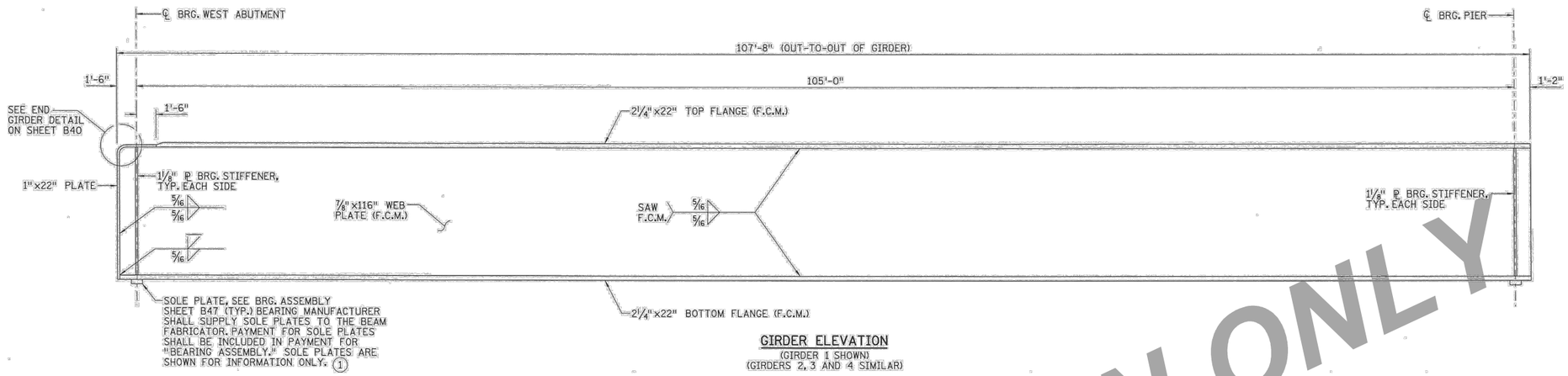

GIRDER ELEVATION
(GIRDER 1 SHOWN)
(GIRDERS 2, 3 AND 4 SIMILAR)

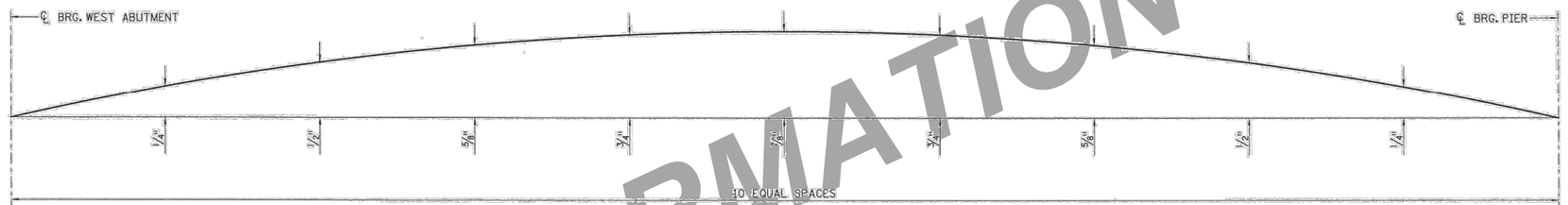

CAMBER DIAGRAM

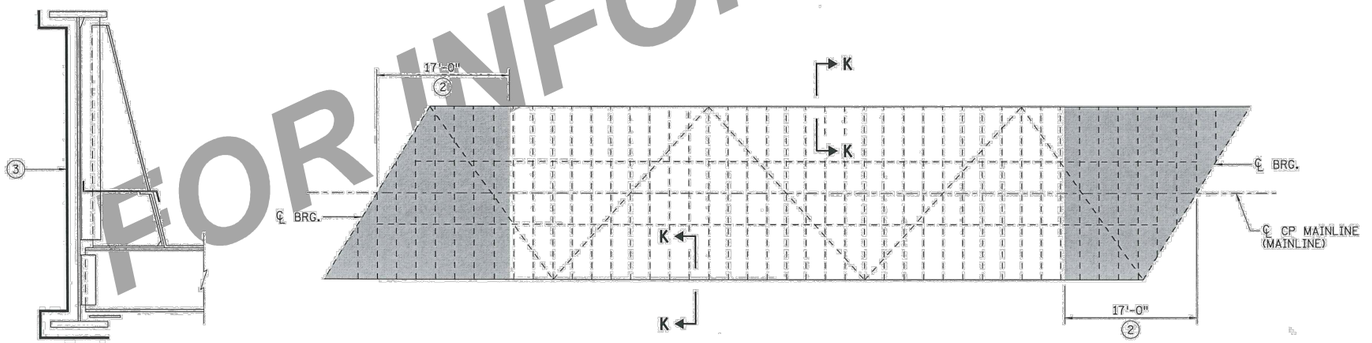

SECTION K-K

SUPERSTRUCTURE PAINTING PLAN

NOTES:

SEE SHEET B37 FOR STRUCTURAL STEEL NOTES.

F.C.M. DENOTES FRACTURE CRITICAL MEMBER

SAW DENOTES SUBMERGED-ARC WELDING

CAMBER DIAGRAM SHOWN IS FOR GIRDER IN UNLOADED POSITION AND PROVIDES FOR ALL DEAD LOAD DEFLECTIONS. BASE LINE IN CAMBER DIAGRAM IS A STRAIGHT LINE FROM ℄ BRG. TO ℄ BRG. AT BOTTOM OF WEB.

NO RESIDUAL CAMBER INCLUDED IN GIRDER CAMBER.

(1) SOLE PLATE SHALL BE BOLTED TO THE UNDERSIDE OF GIRDERS AND FLOORBEAMS USING COUNTERSUNK OR COUNTERBORED ⅞" DIA. ASTM A325 BOLTS. WELDING OF SOLE PLATES SHALL NOT BE PERMITTED.

(2) APPLY INORGANIC ZINC-RICH PAINT SYSTEM (SHOP & FIELD) TO ALL NON-GALVANIZED SURFACES WITHIN 17'-0" OF THE GIRDER BEARING CENTERLINE (AS MEASURED ALONG ℄ CP MAINLINE) INCLUDING FLOORBEAMS, STIFFENERS, BOTTOM OF BALLAST PLATE, KNEE BRACES, AND ALL ASSOCIATED CONNECTIONS. DO NOT PAINT THE WALK PLATE OR THE TOP SURFACE OF THE BALLAST PLATE.

(3) APPLY INORGANIC ZINC-RICH PAINT SYSTEM (SHOP & FIELD) TO THE SURFACES SHOWN (INCLUDING STIFFENERS).

FOR INFORMATION ONLY

NO	DATE	BY	CKD	APPR	REVISION
	03-24-14	JEH	LBR	JMB	

...\Plans\Final\CBR27303_sup02.dgn

SRF Consulting Group, Inc. — Engineers Planners Designers

I hereby certify that this plan, specification, or report was prepared by me or under my direct supervision and that I am a duly Licensed Professional Engineer under the laws of the State of Minnesota.

JAMISON BEISSWENGER License # 44648 DATE 3/24/14

S.P. NO. 2734-27303 (TH100=005)

TITLE: GIRDER ELEVATION AND CAMBER DIAGRAM

DES: LBR | DR: JEH | APPROVED: 3/24/14
CHK: JMB | CHK: LBR

SHEET NO. B38 OF B68 SHEETS

BRIDGE NO. 27303

DRAFT-WORK IN PROCESS

NO.	DATE	BY	CHECK	DESIGN	REVISION / SUBMITTAL

DESIGNED BY: KAE | CHECKED BY: MDJ
DRAWN BY: LMT | CHECKED BY: MDJ

AECOM Kimley»Horn

90% SUBMISSION - 01/22/16

METROPOLITAN COUNCIL

SOUTHWEST Green Line LRT Extension

CIVIL - VOLUME 4F
TH 100 FREIGHT RAIL BRIDGE
BRIDGE 27W34
SUPERSTRUCTURE DETAILS 2

DISCIPLINE: STRUCTURES

SHEET NAME: CBR27W34-BRG-REF-001-2

SHEET 34 OF 68

Dec, 11 2015 11:22 am V:\3400_ADC\CAD\SEGMENT E2\PLAN SHEETS\STRUCTURES\T100-FRT\CBR27W34-BRG-REF-001.dwg By: Katie.Ellis

8/15/05 AM
SRF 2004
H:\Projects\8100\BR\Plans\Final\CBR27303_sup02.dgn

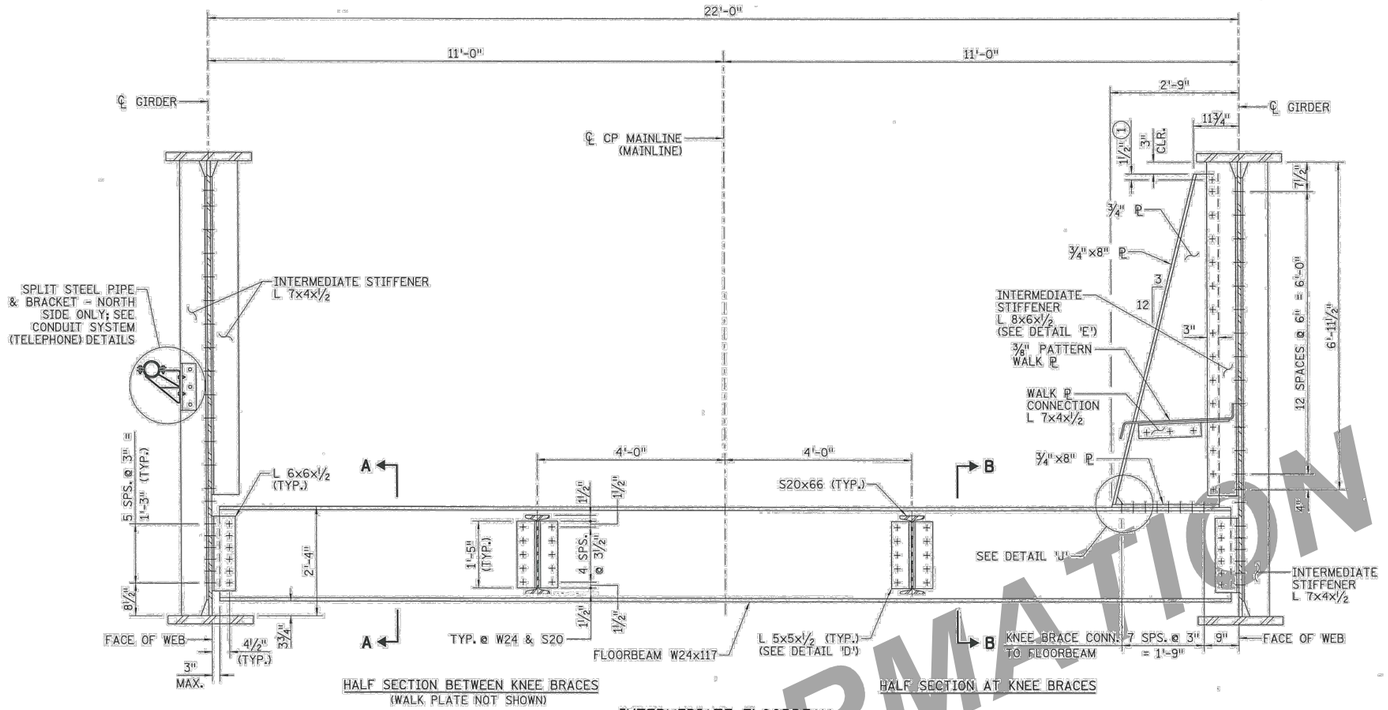

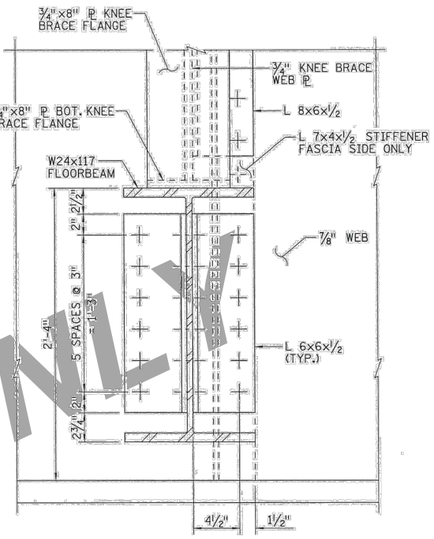

SECTION B-B

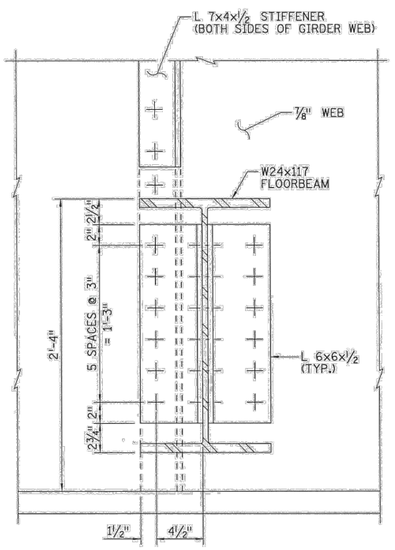

SECTION A-A

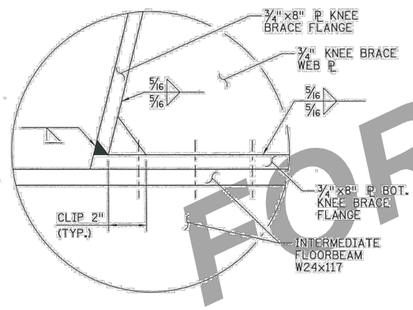

DETAIL 'J'

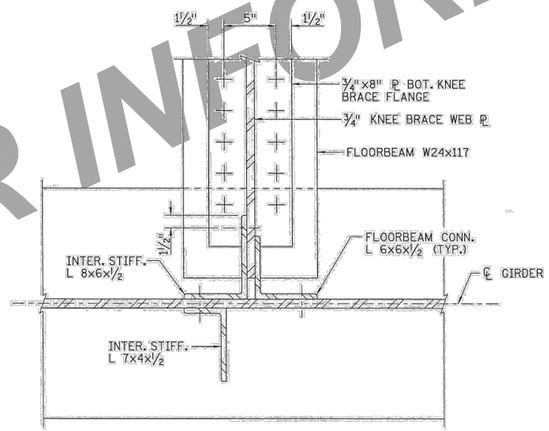

DETAIL 'E'
INTERMEDIATE STIFFENERS AT KNEE BRACE

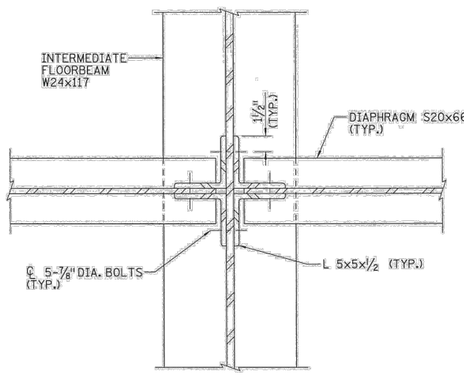

DETAIL 'D'
DIAPHRAGM TO INTERMEDIATE FLOORBEAM CONNECTION

NOTES:

SEE SHEET B37 FOR STRUCTURAL STEEL NOTES.

(1) BOLT FOR CLIP ANGLE. SEE DETAIL 'G' ON SHEET B40.

B15/05 AM
3/24/2014
H:\Projects\B100\BR\P\Plans\Final\CBR27303_sup03.dgn

NO.	DATE	BY	CKD	APPR	REVISION
	03-24-14	JEH	LBR	JMB	

...\Plans\Final\CBR27303_sup03.dgn

SRF Consulting Group, Inc. — Engineers Planners Designers

I hereby certify that this plan, specification, or report was prepared by me or under my direct supervision and that I am a duly licensed Professional Engineer under the laws of the State of Minnesota.

JAMISON BEISSWENGER License # 44648 — DATE 3/24/14

S.P. NO. 2734-27303 (TH100=005)

TITLE: FLOORBEAM DETAILS

DES: LBR | DR: JEH | APPROVED: 3/24/14
CHK: JMB | CHK: LBR

SHEET NO. B39 OF B68 SHEETS

BRIDGE NO. 27303

FOR INFORMATION ONLY

DRAFT-WORK IN PROCESS

NO.	DATE	BY	CHECK	DESIGN	REVISION / SUBMITTAL

DESIGNED BY: KAE | CHECKED BY: MDJ
DRAWN BY: LMT | CHECKED BY: MDJ

AECOM Kimley»Horn

90% SUBMISSION - 01/22/16

METROPOLITAN COUNCIL

SOUTHWEST Green Line LRT Extension

CIVIL - VOLUME 4F
TH 100 FREIGHT RAIL BRIDGE
BRIDGE 27W34
SUPERSTRUCTURE DETAILS 3

DISCIPLINE: STRUCTURES

SHEET NAME: CBR27W34-BRG-REF-001-3

SHEET 35 OF 68

Dec, 11 2015 11:22 am V:\3400_ADC\CAD\SEGMENT E2\PLAN SHEETS\STRUCTURES\T100-FRT\CBR27W34-BRG-REF-001.dwg By: Katie.Ellis

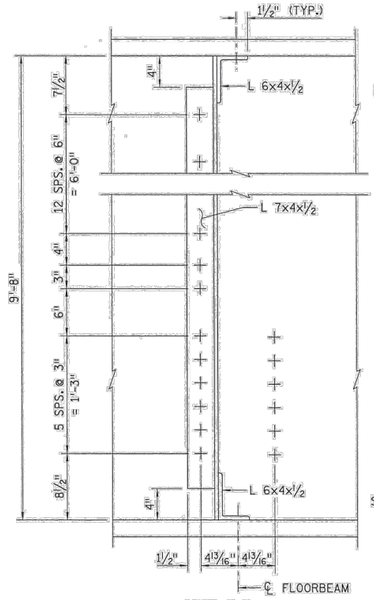

VIEW C-C

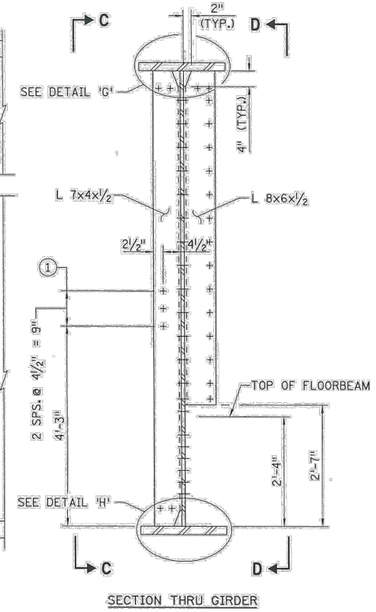

SECTION THRU GIRDER

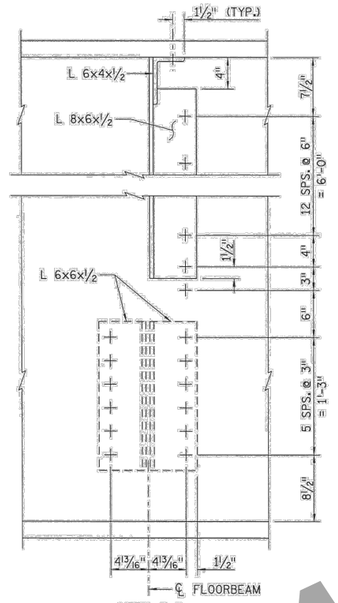

VIEW D-D

INTERMEDIATE STIFFENERS AT KNEE BRACE

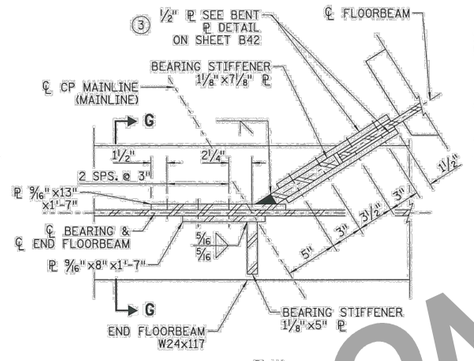

PLAN

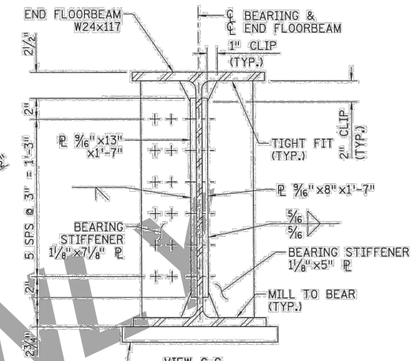

VIEW G-G

SOLE PLATE, SEE BRG. ASSEMBLY SHEET B47 (TYP.) BEARING MANUFACTURER SHALL SUPPLY SOLE PLATES TO THE BEAM FABRICATOR. PAYMENT FOR SOLE PLATES SHALL BE INCLUDED IN PAYMENT FOR "BEARING ASSEMBLY." SOLE PLATES ARE (4) SHOWN FOR INFORMATION ONLY.

BEARING STIFFENER/FLOORBEAM CONNECTION

TYPICAL ℄ MIDPOINT OF END FLOORBEAMS

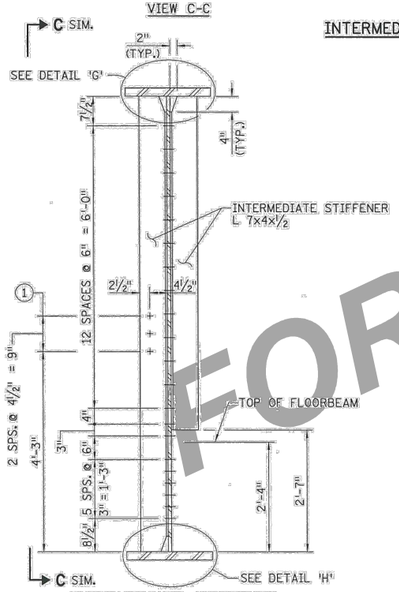

INTERMEDIATE STIFFENER BETWEEN KNEE BRACES

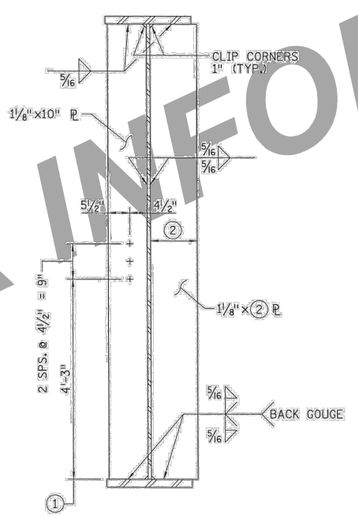

BEARING STIFFENER DETAILS

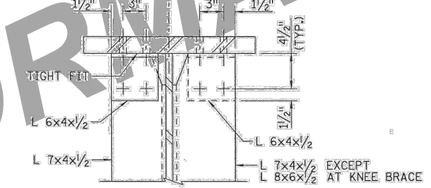

DETAIL 'G'

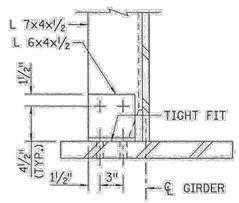

DETAIL 'H'

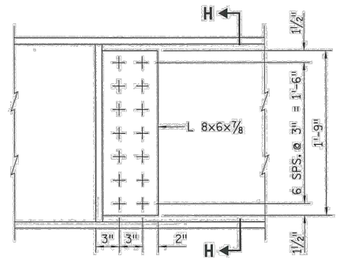

ELEVATION

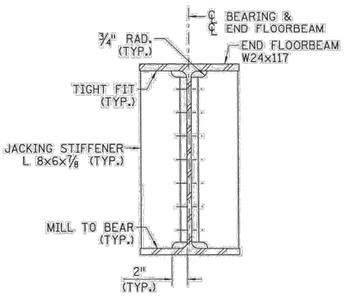

VIEW H-H

JACKING STIFFENER

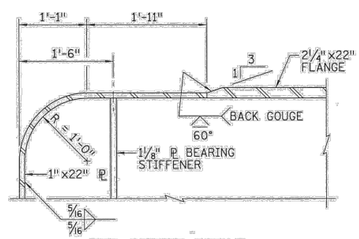

END GIRDER DETAIL

AT ABUTMENTS ONLY

NOTES:

SEE SHEET B37 FOR STRUCTURAL STEEL NOTES.

1. HOLES FOR CONDUIT SYSTEM (TELEPHONE) BRACKET. GIRDERS G1 & G3 ONLY.
2. 1'-0" MEASURED ALONG SHORT SIDE OF PLATE.
3. PROVIDE FILL PLATE ON BOTH SIDES OF SMALLER WEB TO MATCH STIFFENER.
4. SOLE PLATE SHALL BE BOLTED TO THE UNDERSIDE OF GIRDERS AND FLOORBEAMS USING COUNTERSUNK OR COUNTERBORED ⅞" DIA. ASTM A325 BOLTS. WELDING OF SOLE PLATES SHALL NOT BE PERMITTED.

FOR INFORMATION ONLY

NO	DATE	BY	CKD	APPR	REVISION
	03-24-14	JEH	LBR	JMB	

...\Plans\Final\CBR27303_sup04.dgn

SRF Consulting Group, Inc. — Engineers Planners Designers

I hereby certify that this plan, specification, or report was prepared by me or under my direct supervision and that I am a duly Licensed Professional Engineer under the laws of the State of Minnesota.

JAMISON BEISSWENGER License # 44648 — DATE 3/24/14

S.P. NO. 2734-27303 (TH100=005)

TITLE: MISCELLANEOUS STEEL DETAILS

DES: LBR | DR: JEH | APPROVED: 3/24/14
CHK: JMB | CHK: LBR

SHEET NO. B40 OF B68 SHEETS

BRIDGE NO. 27303

DRAFT-WORK IN PROCESS

NO.	DATE	BY	CHECK	DESIGN	REVISION / SUBMITTAL

DESIGNED BY: KAE | CHECKED BY: MDJ
DRAWN BY: LMT | CHECKED BY: MDJ

AECOM Kimley»Horn

90% SUBMISSION - 01/22/16

METROPOLITAN COUNCIL

SOUTHWEST Green Line LRT Extension

CIVIL - VOLUME 4F
TH 100 FREIGHT RAIL BRIDGE
BRIDGE 27W34
SUPERSTRUCTURE DETAILS 4

DISCIPLINE: STRUCTURES

SHEET NAME: CBR27W34-BRG-REF-001-4

SHEET 36 OF 68

Dec, 11 2015 11:22 am V:\3400_ADC\CAD\SEGMENT E2\PLAN SHEETS\STRUCTURES\T100-FRT\CBR27W34-BRG-REF-001.dwg By: Katie.Ellis

115106 AM
H:\Projects\B100\BR\Plans\Final\CBR27303_sup04.dgn

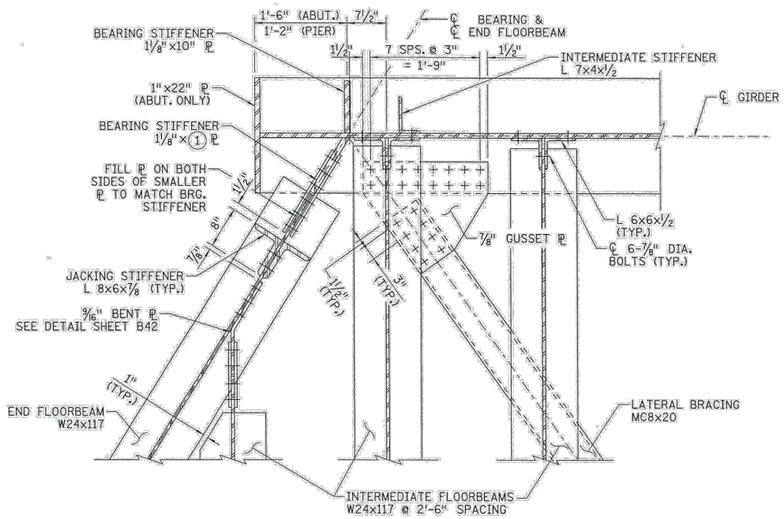

DETAIL 'A'

END FLOORBEAM CONNECTION AT OBTUSE CORNER
ABUTMENT CORNER SHOWN, PIER CORNER SIM.

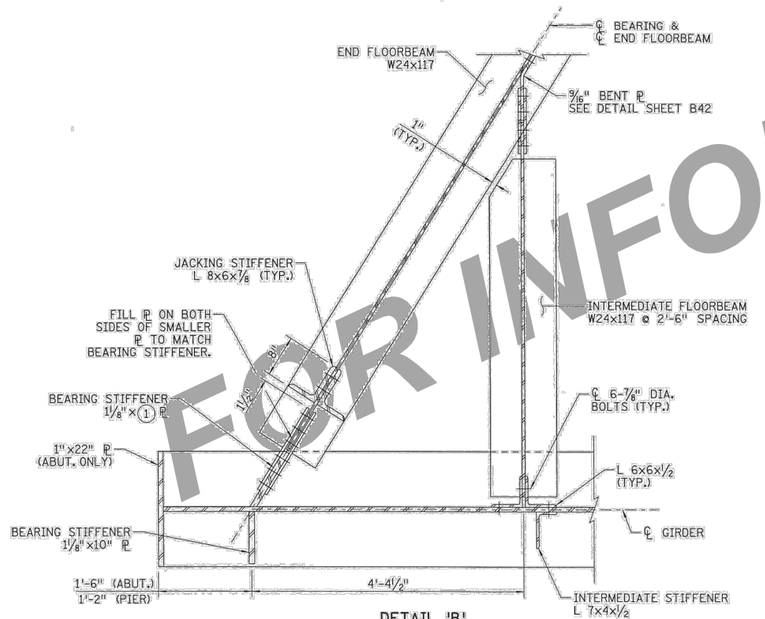

DETAIL 'B'

END FLOORBEAM CONNECTION AT ACUTE CORNER
ABUTMENT CORNER SHOWN, PIER CORNER SIM.

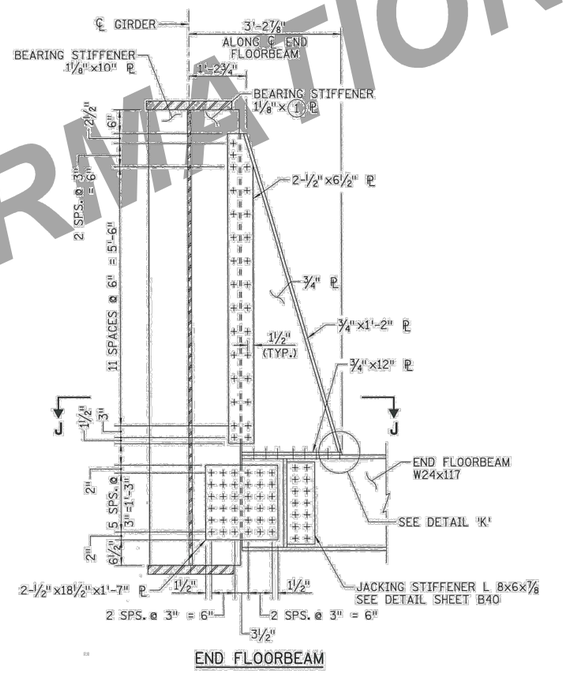

END FLOORBEAM

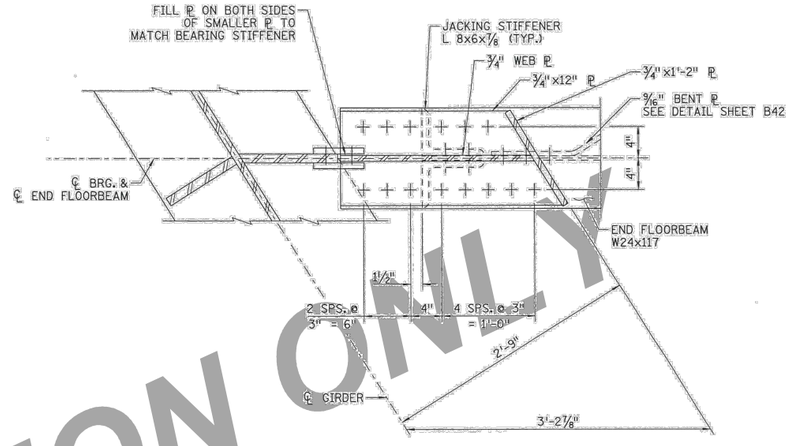

SECTION J-J

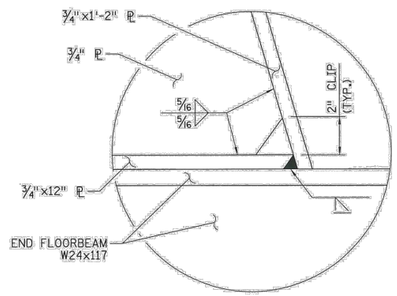

DETAIL 'K'

NOTES:

SEE SHEET B37 FOR STRUCTURAL STEEL NOTES.

① 1'-0" MEASURED ALONG SHORT SIDE OF PLATE.

FOR INFORMATION ONLY

NO	DATE	BY	CKD	APPR	REVISION
	03-24-14	JEH	LBR	JMB	

...\Plans\Final\CBR27303_sup05.dgn

SRF Consulting Group, Inc. — Engineers Planners Designers

I hereby certify that this plan, specification, or report was prepared by me or under my direct supervision and that I am a duly Licensed Professional Engineer under the laws of the State of Minnesota.

JAMISON BEISSWENGER License # 44648 DATE 3/24/14

S.P. NO. 2734-27303 (TH100=005)

TITLE: MISCELLANEOUS STEEL DETAILS

DES: LBR	DR: ARH	APPROVED: 3/24/14
CHK: JMB	CHK: LBR	

SHEET NO. B41 OF B68 SHEETS

BRIDGE NO. 27303

DRAFT-WORK IN PROCESS

NO.	DATE	BY	CHECK	DESIGN	REVISION / SUBMITTAL

DESIGNED BY: KAE CHECKED BY: MDJ
DRAWN BY: LMT CHECKED BY: MDJ

AECOM Kimley»Horn

90% SUBMISSION - 01/22/16

METROPOLITAN COUNCIL

SOUTHWEST Green Line LRT Extension

CIVIL - VOLUME 4F
TH 100 FREIGHT RAIL BRIDGE
BRIDGE 27W34
SUPERSTRUCTURE DETAILS 5

DISCIPLINE: STRUCTURES

SHEET NAME: CBR27W34-BRG-REF-001-5

SHEET 37 OF 68

Dec, 11 2015 11:23 am V:\3400_ADC\CAD\SEGMENT E2\PLAN SHEETS\STRUCTURES\T100-FRT\CBR27W34-BRG-REF-001.dwg By: Katie.Ellis

3/24/2014 11:07 AM
H:\Projects\A8100\BRP\Plans\Final\CBR27303_sup05.dgn

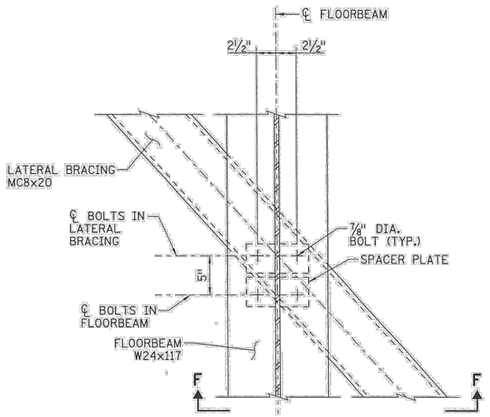

DETAIL 'C'

LATERAL BRACING TO FLOORBEAM CONNECTION

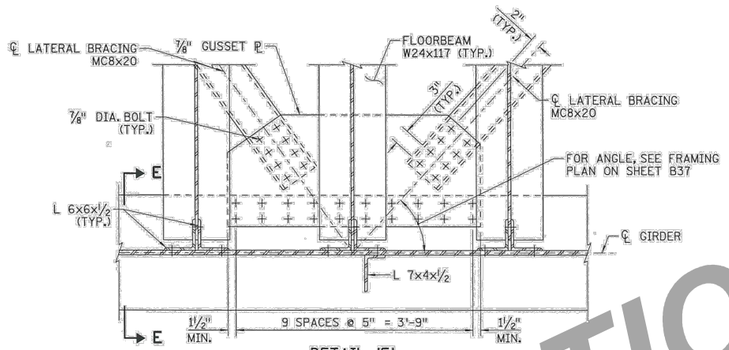

DETAIL 'F'

LATERAL BRACING TO GIRDER CONNECTION

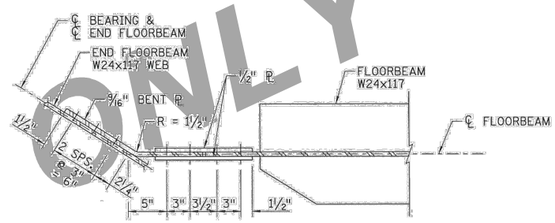

PLAN

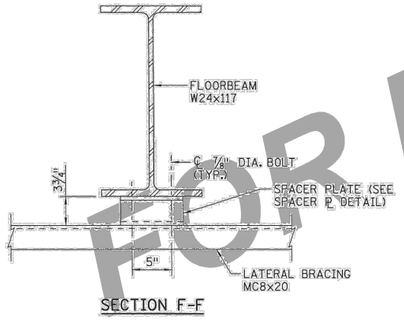

SECTION F-F

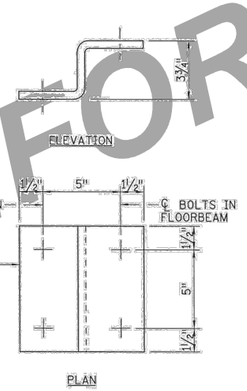

SPACER PLATE DETAIL

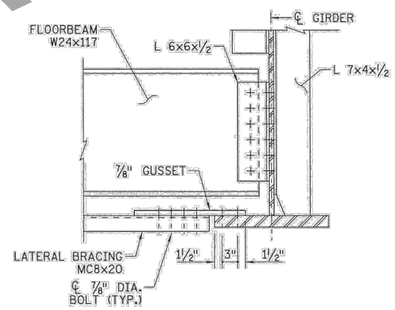

SECTION E-E

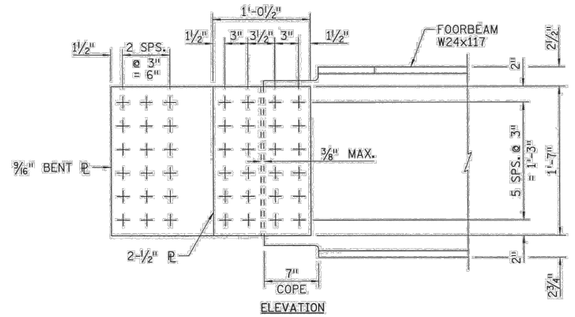

ELEVATION

BENT PLATE DETAIL

TYPICAL AT FLOORBEAM TO END FLOORBEAM CONNECTION

NOTES:

SEE SHEET B37 FOR STRUCTURAL STEEL NOTES.

FOR INFORMATION ONLY

8/25/09 AM
11"X17" (Plotted @ 100%)
H:\Projects\81100\BR\Plans\Final\CBR27303_sup06.dgn

NO	DATE	BY	CKD	APPR	REVISION
	03-24-14	JEH	LBR	JMB	

SRF Consulting Group, Inc. — Engineers Planners Designers

I hereby certify that this plan, specification, or report was prepared by me or under my direct supervision and that I am a duly licensed Professional Engineer under the laws of the State of Minnesota.

3/24/14 DATE

JAMISON BEISSWENGER License # 44648

S.P. NO. 2734-27303 (TH100=005)

TITLE: MISCELLANEOUS STEEL DETAILS

DES: LBR	DR: ARH	APPROVED: 3/24/14
CHK: JMB	CHK: LBR	

SHEET NO. B42 OF B68 SHEETS

BRIDGE NO. 27303

DRAFT-WORK IN PROCESS

NO.	DATE	BY	CHECK	DESIGN	REVISION / SUBMITTAL

AECOM Kimley»Horn

DESIGNED BY: KAE CHECKED BY: MDJ

DRAWN BY: LMT CHECKED BY: MDJ

90% SUBMISSION - 01/22/16

METROPOLITAN COUNCIL

SOUTHWEST Green Line LRT Extension

CIVIL - VOLUME 4F
TH 100 FREIGHT RAIL BRIDGE
BRIDGE 27W34
SUPERSTRUCTURE DETAILS 6

DISCIPLINE: STRUCTURES

SHEET NAME: CBR27W34-BRG-REF-001-6

SHEET 38 OF 68

Dec, 11 2015 11:23 am V:\3400_ADC\CAD\SEGMENT E2\PLAN SHEETS\STRUCTURES\T100-FRT\CBR27W34-BRG-REF-001.dwg By: Katie.Ellis

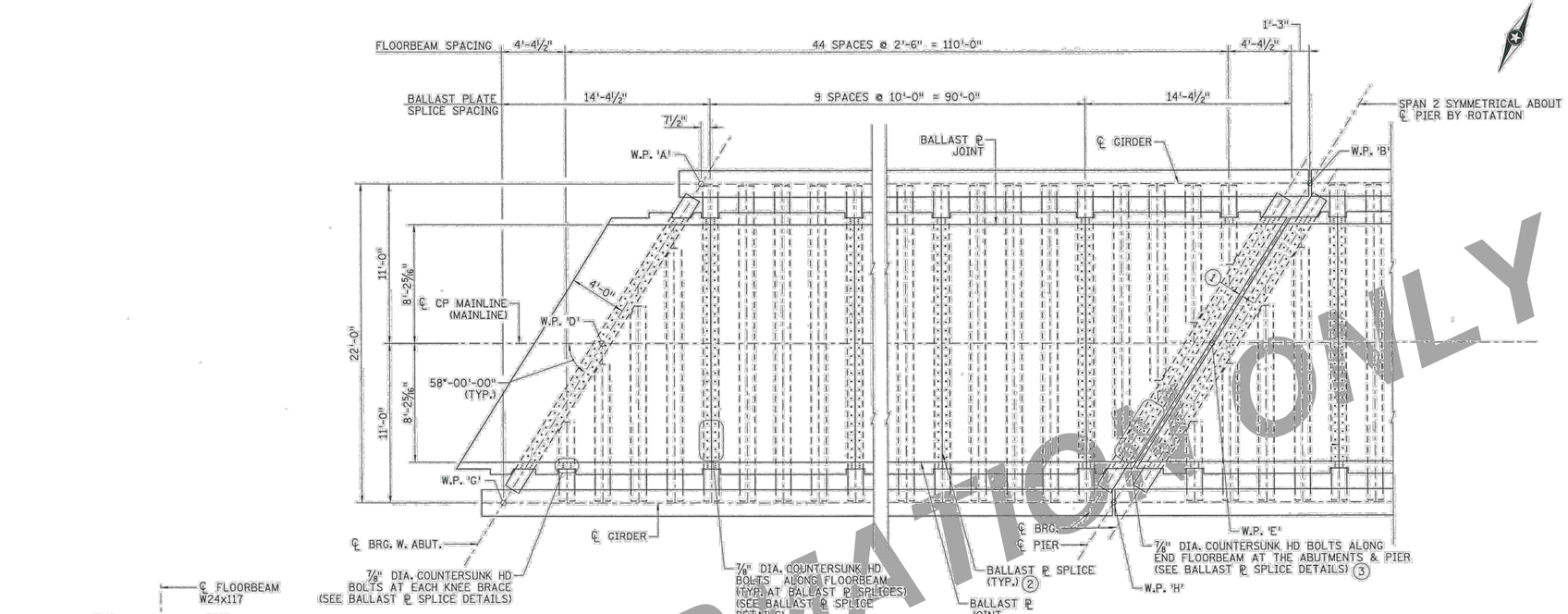

BALLAST PLATE PARTIAL PLAN

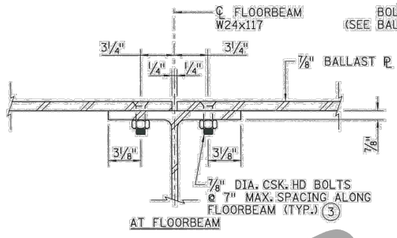

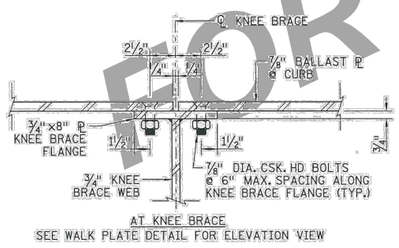

BALLAST PLATE SPLICE DETAILS

BOLT SPACING AT BALLAST ℄ SPLICE SHOWN SPACING SIMILAR AT END FLOORBEAMS (ABUT. & PIER) (WATERPROOFING NOT SHOWN)

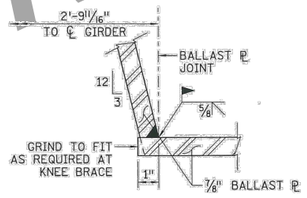

BALLAST PLATE WELD DETAIL

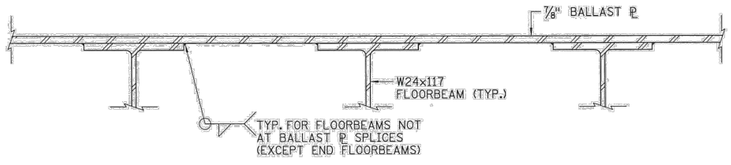

FLOORBEAM TO BALLAST PLATE WELD DETAIL

NOTES:

FOR STRUCTURAL STEEL NOTES, SEE SHEET B37.

ALL SUPPORT ANGLES AND PLATES EMBEDED IN THE ABUTMENT CONCRETE SHALL BE GALVANIZED PER MnDOT 3394 (SEE SUPPORT ANGLE DETAIL FOR EXPANSION JOINTS AND SECTION A-A ON SHEET B44). ALL GALVANIZING SHALL BE CONSIDERED INCIDENTAL AND INCLUDED IN PRICE BID FOR OTHER ITEMS.

SEE SPECIAL PROVISIONS FOR WATERPROOFING.

ALL BENT PLATES SHALL HAVE A MINIMUM COLD BENDING RADIUS UNLESS OTHERWISE NOTED.

1. 1½" GAP. SEE DETAIL OF EXPANSION JOINT AT PIER, SHEET B44.
2. BALLAST PLATE SPLICE LOCATIONS SHOWN MAY BE MODIFIED AS REQUIRED FOR EASE OF FABRICATION, TRANSPORTATION, OR ERECTION, EXCEPT THAT NO SPLICE WILL BE LOCATED AT A FLOORBEAM THAT SUPPORTS THE LATERAL BRACING. BALLAST PLATE WILL BE BOLTED TO EACH KNEE BRACE.
3. CAREFULLY LOCATE BOLT HOLES ON END FLOORBEAMS SO AS NOT TO INTERFERE WITH FLOORBEAM CONNECTION PLATES (SEE BENT PLATE DETAILS ON SHEET B42). ELIMINATE BOLT HOLES FOR BOLTS THAT INTERFERE WITH FLOORBEAM CONNECTION PLATES. IN NO CASE WILL AN OPEN HOLE WITHOUT A PRETENSIONED BOLT BE PERMITTED. WELDING OF THE BALLAST ℄ TO THE END FLOORBEAMS WILL NOT BE ALLOWED.

FOR INFORMATION ONLY

NO	DATE	BY	CKD	APPR	REVISION
	03-24-14	JEH	LBR	JMB	

8:15:10 AM 3/24/2014 H:\Projects\8100\BR\Plans\Final\CBR27303_sup08.dgn ...\Plans\Final\CBR27303_sup08.dgn

SRF Consulting Group, Inc. — Engineers Planners Designers

I hereby certify that this plan, specification, or report was prepared by me or under my direct supervision and that I am a duly Licensed Professional Engineer under the laws of the State of Minnesota.

JAMISON BEISSWENGER License # 44648 — DATE 3/24/14

S.P. NO. 2734-27303 (TH100=005)

TITLE: BALLAST PLATE AND WATERPROOFING DETAILS (SHEET 1 OF 2)

DES: LBR | DR: JEH | APPROVED: 3/24/14
CHK: JMB | CHK: LBR
SHEET NO. B43 OF B68 SHEETS

BRIDGE NO. 27303

DRAFT-WORK IN PROCESS

NO.	DATE	BY	CHECK	DESIGN	REVISION / SUBMITTAL

DESIGNED BY: KAE | CHECKED BY: MDJ
DRAWN BY: LMT | CHECKED BY: MDJ

AECOM Kimley»Horn

90% SUBMISSION - 01/22/16

METROPOLITAN COUNCIL

SOUTHWEST Green Line LRT Extension

CIVIL - VOLUME 4F
TH 100 FREIGHT RAIL BRIDGE
BRIDGE 27W34
SUPERSTRUCTURE DETAILS 7

DISCIPLINE: STRUCTURES
SHEET NAME: CBR27W34-BRG-REF-001-7

SHEET 39 OF 68

Dec. 11 2015 11:23 am V:\3400_ADC\CAD\SEGMENT E2\PLAN SHEETS\STRUCTURES\T100-FRT\CBR27W34-BRG-REF-001.dwg By: Katie.Ellis

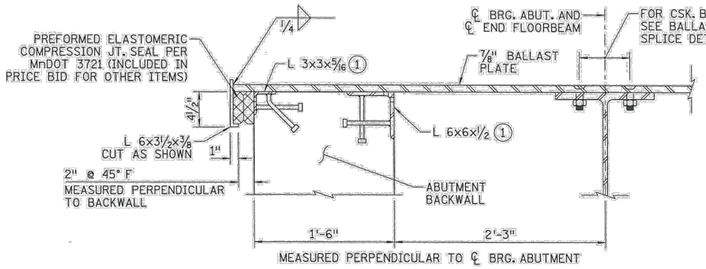

NOTE:
PROVIDE 9/16" DIA. HOLES @ 1'-0" CNTRS. IN VERTICAL LEGS OF PROTECTION ANGLES FOR FORM ATTACHMENT AND AIR RELIEF DURING CONCRETE PLACEMENT.

DETAIL OF EXPANSION JOINT AT ABUTMENT

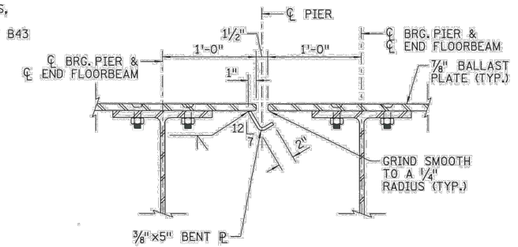

DETAIL OF EXPANSION JOINT AT PIER
(SECTION NORMAL TO ℄ PIER)

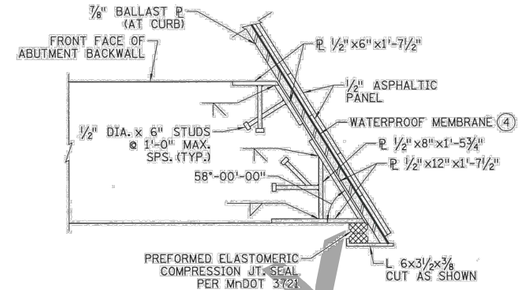

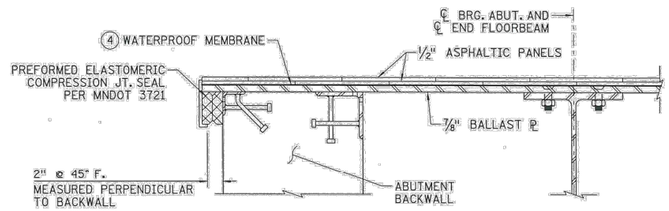

WATERPROOFING AT ABUTMENT

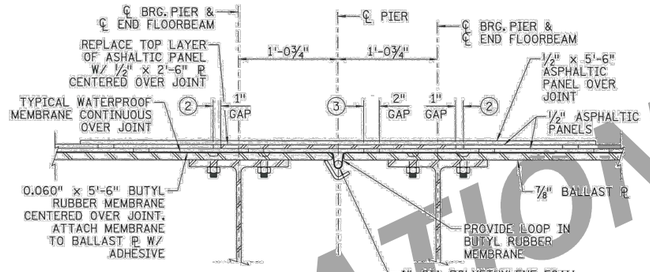

WATERPROOFING AT PIER
(SECTION NORMAL TO ℄ PIER)

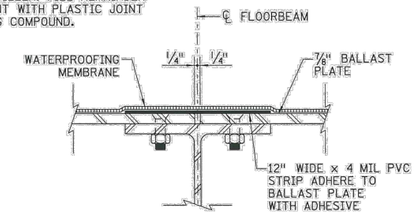

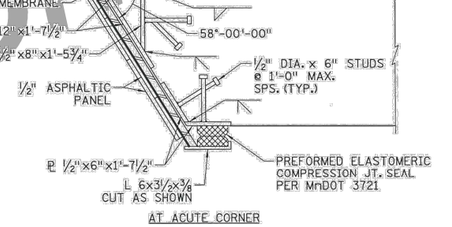

SECTION A-A

NOTES:
1. SEE SUPPORT ANGLE DETAIL FOR EXPANSION JOINTS.
2. BETWEEN ASPHALTIC PANEL & 1/2" ℙ.
3. BETWEEN ASPHALTIC PANELS.
4. ATTACH MEMBRANE TO BALLAST ℙ W/ ADHESIVE FOR A MINIMUM OF 3'-0" AT ENDS OF BRIDGE.

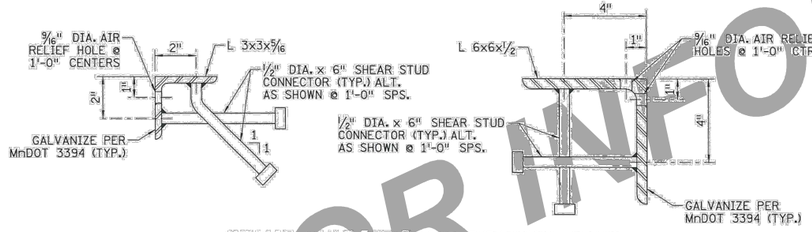

SUPPORT ANGLE DETAIL FOR EXPANSION JOINTS

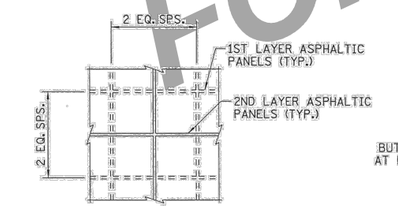

TYPICAL ASPHALT PANEL PLACEMENT

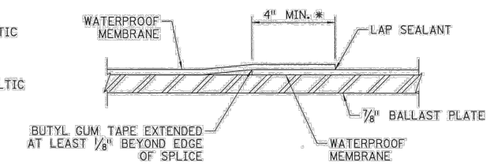

WATERPROOF MEMBRANE SPLICE DETAIL
* ALL CONTACT SURFACES TO BE THOROUGHLY CLEANED & CEMENTED

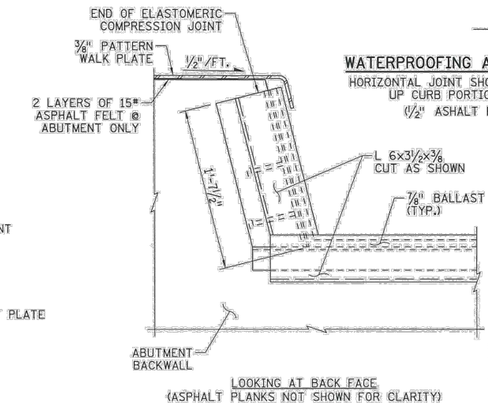

WATERPROOFING AT BALLAST ℙ SPLICE
HORIZONTAL JOINT SHOWN, TREATMENT CONTINUOUS UP CURB PORTION OF BALLAST PLATE
(1/2" ASHALT PLANKS NOT SHOWN)

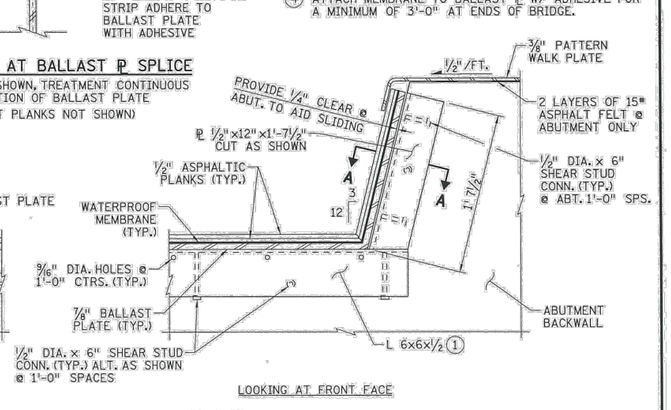

EXPANSION JOINT ELEVATION AT ABUTMENT

FOR INFORMATION ONLY

NO	DATE	BY	CKD	APPR	REVISION
	03-24-14	JEH	LBR	JMB	

SRF Consulting Group, Inc. — Engineers Planners Designers

I hereby certify that this plan, specification, or report was prepared by me or under my direct supervision and that I am a duly Licensed Professional Engineer under the laws of the State of Minnesota.
JAMISON BEISSWENGER License # 44648 DATE 3/24/14

S.P. NO. 2734-27303 (TH100=005)

TITLE: BALLAST PLATE AND WATERPROOFING DETAILS (SHEET 2 OF 2)

DES: LBR	DR: JEH	APPROVED: 3/24/14
CHK: JMB	CHK: LBR	

SHEET NO. B44 OF B68 SHEETS

BRIDGE NO. 27303

B:\15\12 AM
H:\Projects\8100\BR\Plans\Final\CBR27303_sup09.dgn
...\Plans\Final\CBR27303_sup09.dgn

Dec, 11 2015 11:23 am V:\3400_ADC\CAD\SEGMENT E2\PLAN SHEETS\STRUCTURES\T100-FRT\CBR27W34-BRG-REF-001.dwg By: Katie.Ellis

DRAFT-WORK IN PROCESS

NO.	DATE	BY	CHECK	DESIGN	REVISION / SUBMITTAL

DESIGNED BY: KAE CHECKED BY: MDJ
DRAWN BY: LMT CHECKED BY: MDJ

AECOM Kimley»Horn

90% SUBMISSION - 01/22/16

METROPOLITAN COUNCIL

SOUTHWEST Green Line LRT Extension

CIVIL - VOLUME 4F
TH 100 FREIGHT RAIL BRIDGE
BRIDGE 27W34
SUPERSTRUCTURE DETAILS 8

DISCIPLINE: STRUCTURES

SHEET NAME: CBR27W34-BRG-REF-001-8

SHEET 40 OF 68

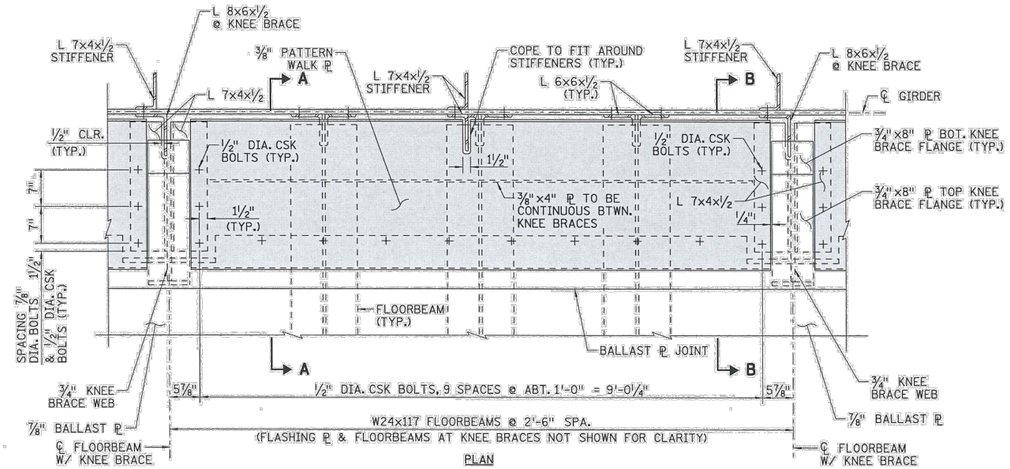

PLAN

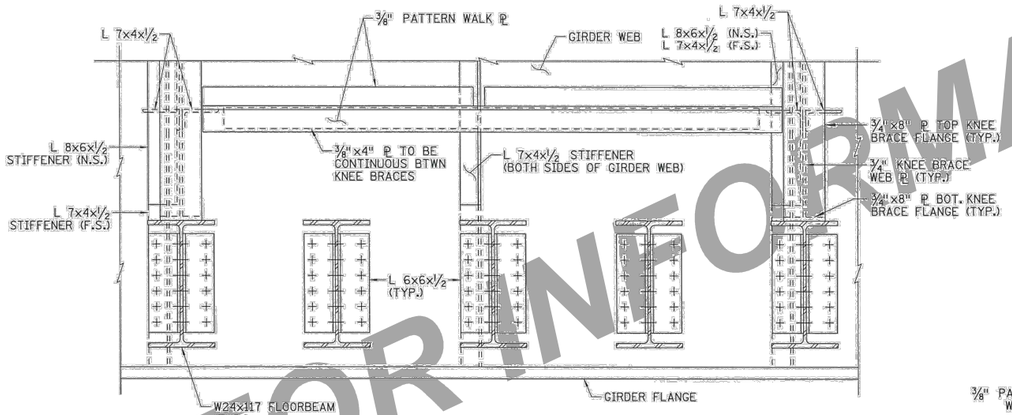

PARTIAL ELEVATION
(BALLAST PLATE NOT SHOWN FOR CLARITY)

WALKWAY DETAILS

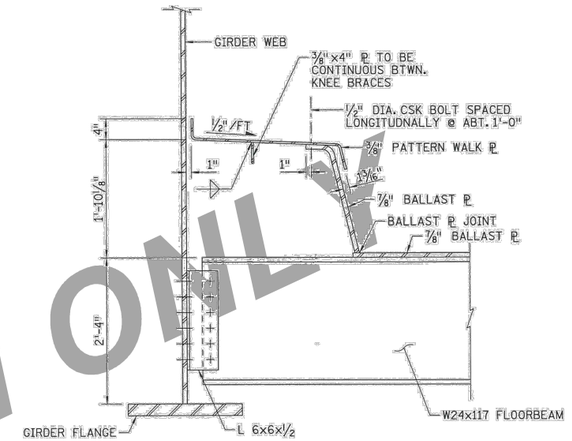

SECTION A-A
(TYPICAL WALK PLATE)

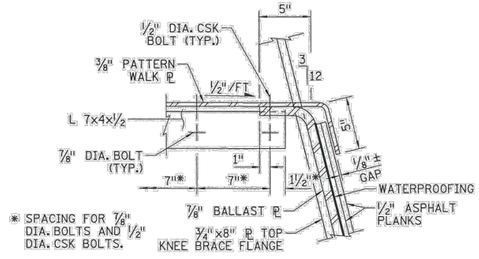

* SPACING FOR ⅞" DIA. BOLTS AND ½" DIA. CSK BOLTS.

DETAIL 'L'

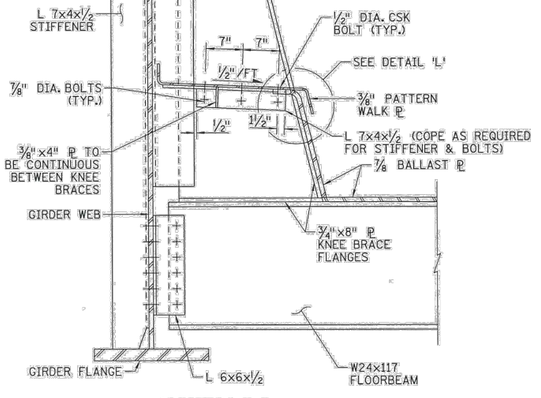

SECTION B-B
(AT KNEE BRACE)

NOTES:

PATTERN PLATES SHALL HAVE A RAISED PATTERN SURFACE, SHALL MEET MnDOT 3306 AND SHALL BE GALVANIZED PER MnDOT 3394. PAYMENT FOR PATTERN PLATE WILL BE INCLUDED IN WEIGHT OF STRUCTURAL STEEL (3309).

ALL BENT PLATES SHALL HAVE A MINIMUM COLD BENDING RADIUS UNLESS OTHERWISE NOTED.

N.S. DENOTES NEAR SIDE.
F.S. DENOTES FAR SIDE.

FOR INFORMATION ONLY

8:15:14 AM
V:\3400_ADC\CAD\SEGMENT E2\PLAN SHEETS\STRUCTURES\T100-FRT\CBR27W34-BRG-REF-001.dgn
...\Plans\Final\CBR27303_sup10.dgn

NO	DATE	BY	CKD	APPR	REVISION
	03-24-14	JEH	LBR	JMB	

SRF Consulting Group, Inc. — Engineers, Planners, Designers

I hereby certify that this plan, specification, or report was prepared by me or under my direct supervision and that I am a duly Licensed Professional Engineer under the laws of the State of Minnesota.
3/24/14 DATE
JAMISON BEISSWENGER License # 44648

S.P. NO. 2734-27303 (TH100=005)

TITLE: WALK PLATE DETAILS (SHEET 1 OF 2)

DES: LBR	DR: ARH	APPROVED: 3/24/14
CHK: JMB	CHK: LBR	

SHEET NO. B45 OF B68 SHEETS

BRIDGE NO. 27303

DRAFT-WORK IN PROCESS

NO.	DATE	BY	CHECK	DESIGN	REVISION / SUBMITTAL

DESIGNED BY: KAE — CHECKED BY: MDJ
DRAWN BY: LMT — CHECKED BY: MDJ

AECOM Kimley»Horn

90% SUBMISSION - 01/22/16

METROPOLITAN COUNCIL

SOUTHWEST Green Line LRT Extension

CIVIL - VOLUME 4F
TH 100 FREIGHT RAIL BRIDGE
BRIDGE 27W34
SUPERSTRUCTURE DETAILS 9

DISCIPLINE: STRUCTURES
SHEET NAME: CBR27W34-BRG-REF-001-9

SHEET 41 OF 68

Dec, 11 2015 11:23 am V:\3400_ADC\CAD\SEGMENT E2\PLAN SHEETS\STRUCTURES\T100-FRT\CBR27W34-BRG-REF-001.dwg By: Katie.Ellis

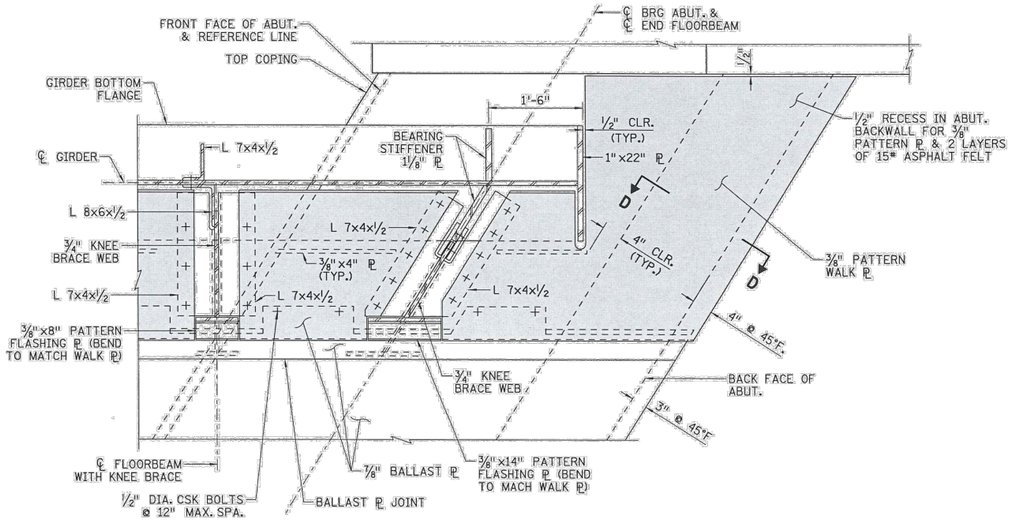

WALK PLATE DETAIL AT NORTHEAST CORNER

(FLOORBEAMS & KNEE BRACE BOT. FLANGES NOT SHOWN FOR CLARITY)
(SOUTHWEST CORNER SIMILAR)

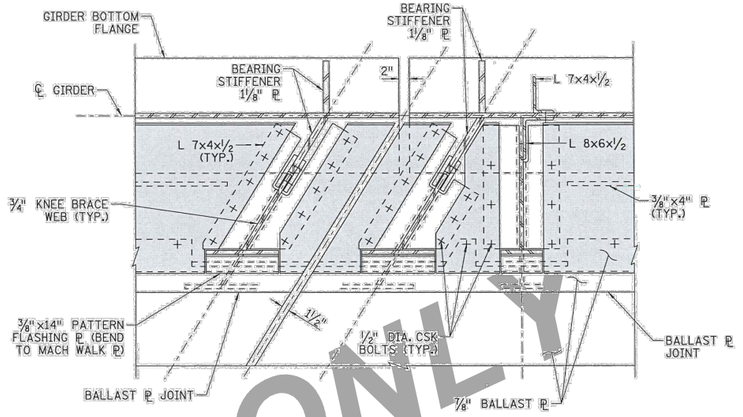

WALK PLATE DETAIL AT PIER

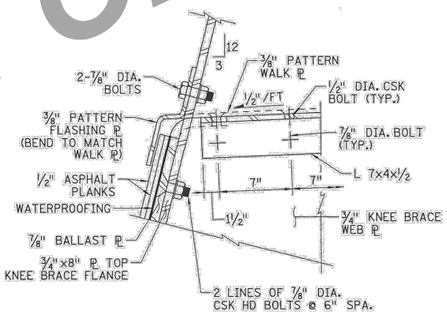

SECTION C-C

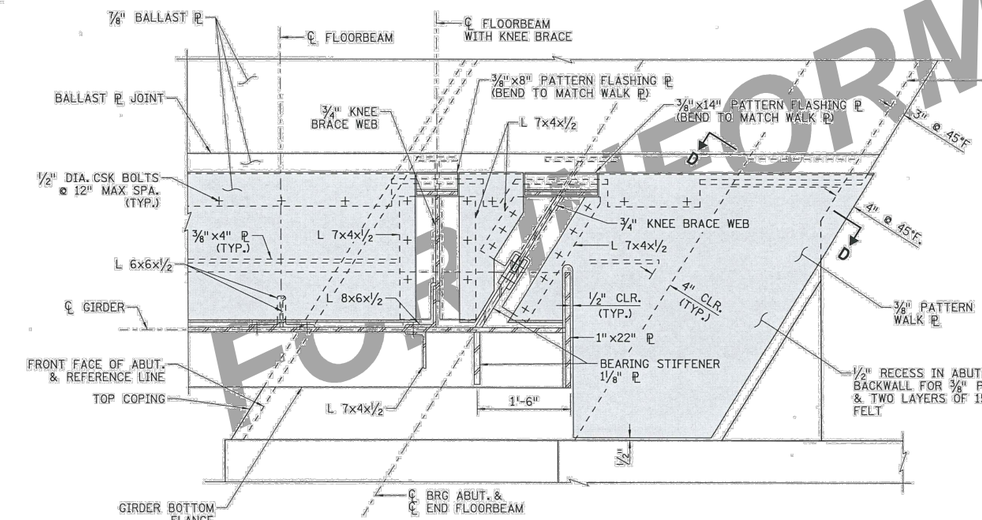

WALK PLATE DETAIL AT SOUTHEAST CORNER

(FLOORBEAMS & KNEE BRACE BOT. FLANGES NOT SHOWN FOR CLARITY)
(NORTHWEST CORNER SIMILAR)



SECTION D-D

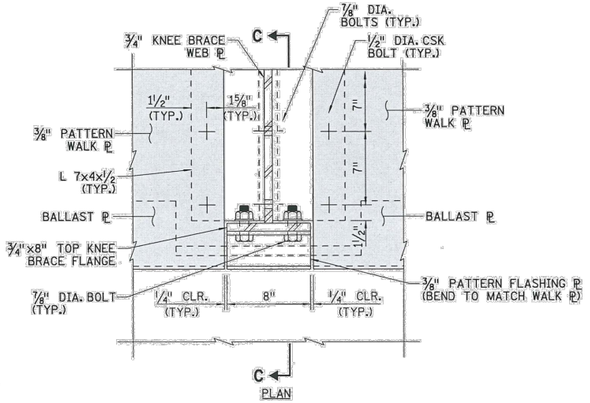

FLASHING PLATE DETAIL

(KNEE BRACE @ INT. STIFF. SHOWN, KNEE BRACE @ BRG. STIFF. SIM.)

FOR INFORMATION ONLY

NO	DATE	BY	CKD	APPR	REVISION
	03-24-14	JEH	LBR	JMB	

...\Plans\Final\CBR27303_sup11.dgn

SRF Consulting Group, Inc. — Engineers Planners Designers

I hereby certify that this plan, specification, or report was prepared by me or under my direct supervision and that I am a duly licensed Professional Engineer under the laws of the State of Minnesota.

JAMISON BEISSWENGER License #: 44648 DATE: 3/24/14

S.P. NO. 2734-27303 (TH100=005)

TITLE: WALK PLATE DETAILS (SHEET 2 OF 2)

DES: LBR | DR: ARH | APPROVED: 3/24/14
CHK: JMB | CHK: LBR

SHEET NO. B46 OF B68 SHEETS

BRIDGE NO. 27303

DRAFT-WORK IN PROCESS

NO.	DATE	BY	CHECK	DESIGN	REVISION / SUBMITTAL

DESIGNED BY: KAE | CHECKED BY: MDJ
DRAWN BY: LMT | CHECKED BY: MDJ

AECOM Kimley»Horn

90% SUBMISSION - 01/22/16

METROPOLITAN COUNCIL

SOUTHWEST Green Line LRT Extension

CIVIL - VOLUME 4F
TH 100 FREIGHT RAIL BRIDGE
BRIDGE 27W34
SUPERSTRUCTURE DETAILS 10

DISCIPLINE: STRUCTURES

SHEET NAME: CBR27W34-BRG-REF-001-10

SHEET 42 OF 68

Dec, 11 2015 11:23 am V:\3400_ADC\CAD\SEGMENT E2\PLAN SHEETS\STRUCTURES\T100-FRT\CBR27W34-BRG-REF-001.dwg By: Katie.Ellis

8/15/16 AM
H:\Projects\8160\BR\Plans\Final\CBR27303_sup11.dgn

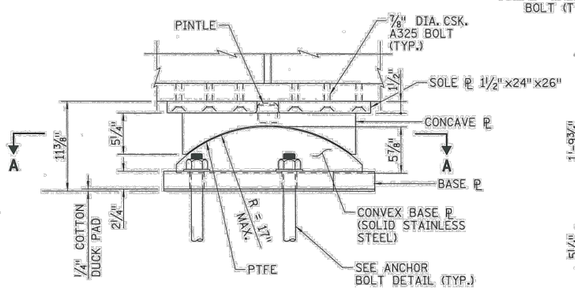

TYPE F1

LOADS & MOVEMENT FOR TYPE F1 BEARING : VERTICAL

DL	215 K
LL + I	480 K
TOTAL	695 K
LONGITUDINAL	155 K
TRANSVERSE	40 K
MIN. ROTATION CAPACITY	0.02 RAD

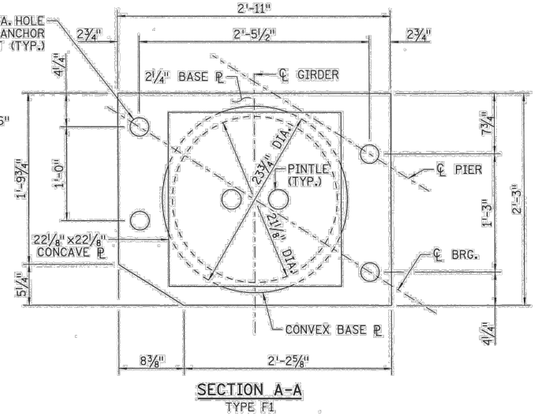

SECTION A-A
TYPE F1

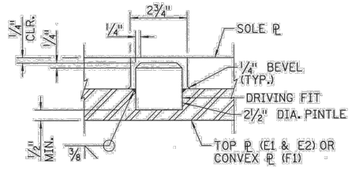

PINTLE DETAIL

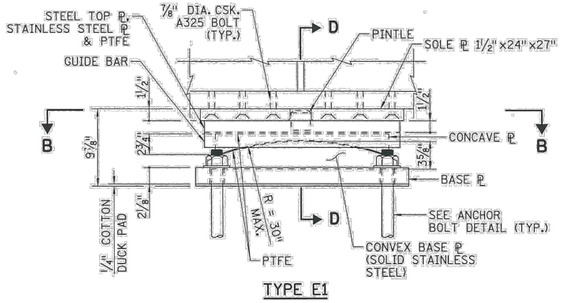

TYPE E1

LOADS & MOVEMENT FOR TYPE E1 BEARING : VERTICAL

DL	215 K
LL + I	480 K
TOTAL	695 K
HORIZONTAL	70 K
LONGIT. MOVEMENT	2⅜ in
MIN. ROTATION CAPACITY	0.02 RAD

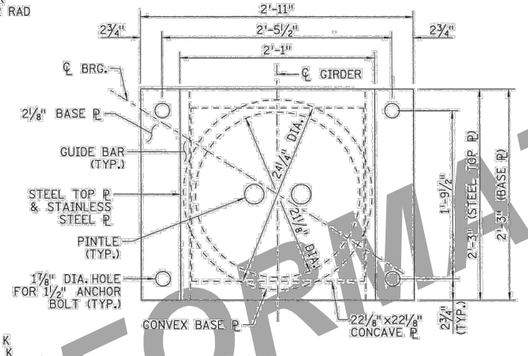

SECTION B-B
TYPE E1

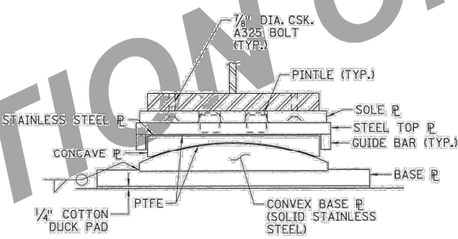

SECTION D-D

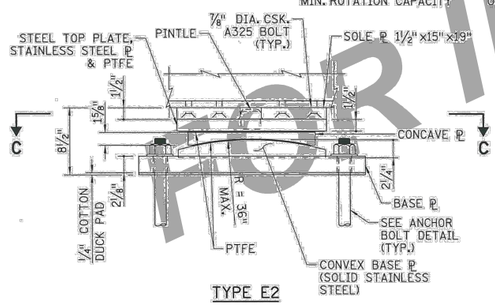

TYPE E2

LOADS & MOVEMENT FOR TYPE E2 BEARING : VERTICAL

DL	25 K
LL + I	350 K
TOTAL	375 K
HORIZONTAL	5 K
LONGIT. MOVEMENT	2⅜ in
MIN. ROTATION CAPACITY	0.02 RAD

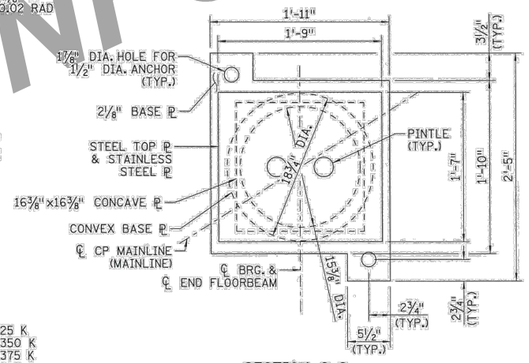

SECTION C-C
TYPE E2

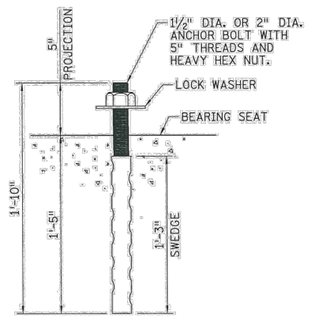

ANCHOR BOLT DETAIL

ALLOWABLE STRESSES:

PTFE BEARING	2000 PSI
MASONRY BEARING	1350 PSI

NOTES:

DETAILS AND DIMENSIONS SHOWN FOR BEARINGS ARE FOR ILLUSTRATION ONLY. THE CONTRACTOR SHALL SUBMIT DETAILS AND SPECIFICATIONS FROM THE BEARING MANUFACTURER FOR APPROVAL BY THE ENGINEER.

BEARING MANUFACTURER SHALL SUPPLY SOLE PLATES TO THE BEAM FABRICATOR. PAYMENT FOR SOLE PLATES SHALL BE INCLUDED IN PAYMENT FOR "BEARING ASSEMBLY". SOLE PLATES ARE SHOWN FOR INFORMATION ONLY.

GALVANIZE SOLE PLATE, MASONRY PLATE, NUTS, WASHERS AND ANCHOR BOLTS PER ASTM A 123 (MnDOT SPEC. 3394). MINIMUM ZINC COATING OF 2 OZ. PER SQUARE FOOT.

METALIZE NON-SLIDING SURFACES OF THE CONCAVE PLATE AND THE TOP PLATE PER MnDOT SPEC. 2471.3L2.

SOLE PLATE SHALL BE BOLTED TO THE UNDERSIDE OF GIRDERS AND FLOORBEAMS USING COUNTERSUNK OR COUNTERBORED ⅞" DIA. ASTM A325 BOLTS. WELDING OF SOLE PLATES SHALL NOT BE PERMITTED.

ANY ADJUSTMENT IN ELEVATION NECESSARY TO ACCOMMODATE THE BEARING THAT IS SUPPLIED SHALL BE MADE BY ADJUSTING THE TOP OF PIER AND ABUTMENT ELEVATIONS. THE PROFILE GRADE OF THE SUPERSTRUCTURE SHALL REMAIN UNCHANGED. ANY CHANGE IN ELEVATION OF THE TOP OF PIERS OR ABUTMENTS WILL NOT BE ALLOWED WITHOUT APPROVAL OF THE ENGINEER.

PINTLES AND ALL MATERIAL FOR BEARING WELDMENTS INCLUDING TOP PLATES AND BASE PLATES SHALL CONFORM TO MnDOT SPEC. 3309 (GRADE 50W) STEEL UNLESS OTHERWISE NOTED.

ANCHOR BOLTS SHALL CONFORM TO MnDOT SPEC. 3385 TYPE B.

ALL STRUCTURAL STEEL BEARING PLATES SHALL BE FLAT ROLLED STEEL PLATES WITH ALL SURFACES SMOOTH AND FREE FROM WARP AND ALL EDGES SMOOTH, STRAIGHT AND VERTICAL.

ALL PLATE CUTS SHALL BE MACHINE OR MACHINE FLAME CUTS.

BEARING WELDMENTS SHALL BE FULLY STRESS RELIEVED AFTER WELDING IS COMPLETED AND BEFORE FINISHING.

RADIAL SURFACES OF WELDMENTS SHALL BE MACHINE FINISHED AFTER WELDING.

AFTER WELDING BEARING ASSEMBLIES, FINISH BOTTOM OF BASE PLATE TO A FLAT SURFACE.

ANCHOR BOLTS ARE LOCATED TO CLEAR BRIDGE SEAT REINFORCEMENT.

THE PRICE BID FOR BEARING ASSEMBLY SHALL INCLUDE ALL MATERIAL (ANCHOR BOLTS, SOLE PLATES, PREFABRICTED FABRIC PAD, BEARING, PINTLES, ETC.) FOR EACH TYPE AS SHOWN.

FOR INFORMATION ONLY

8:15:17 AM
3/24/2014
...\Plans\Final\CBR27303_sup07.dgn

NO	DATE	BY	CKD	APPR	REVISION
	03-24-14	JEH	LBR	JMB	

SRF Consulting Group, Inc. — Engineers Planners Designers

I hereby certify that this plan, specification, or report was prepared by me or under my direct supervision and that I am a duly Licensed Professional Engineer under the laws of the State of Minnesota.

JAMISON BEISSWENGER 3/24/14 DATE License # 44648

S.P. NO. 2734-27303 (TH100=005)

TITLE: BEARING ASSEMBLIES

DES:	LBR	DR:	BJS	APPROVED: 3/24/14
CHK:	JMB	CHK:	LBR	

SHEET NO. B47 OF B68 SHEETS

BRIDGE NO. 27303

DRAFT-WORK IN PROCESS

NO.	DATE	BY	CHECK	DESIGN	REVISION / SUBMITTAL

DESIGNED BY: KAE CHECKED BY: MDJ
DRAWN BY: LMT CHECKED BY: MDJ

AECOM Kimley»Horn

90% SUBMISSION - 01/22/16

METROPOLITAN COUNCIL

SOUTHWEST Green Line LRT Extension

CIVIL - VOLUME 4F
TH 100 FREIGHT RAIL BRIDGE
BRIDGE 27W34
SUPERSTRUCTURE DETAILS 11

DISCIPLINE: STRUCTURES

SHEET NAME: CBR27W34-BRG-REF-001-11

SHEET 43 OF 68

Dec. 11 2015 11:23 am V:\3400_ADC\CAD\SEGMENT E2\PLAN SHEETS\STRUCTURES\T100-FRT\CBR27W34-BRG-REF-001.dwg By: Katie.Ellis

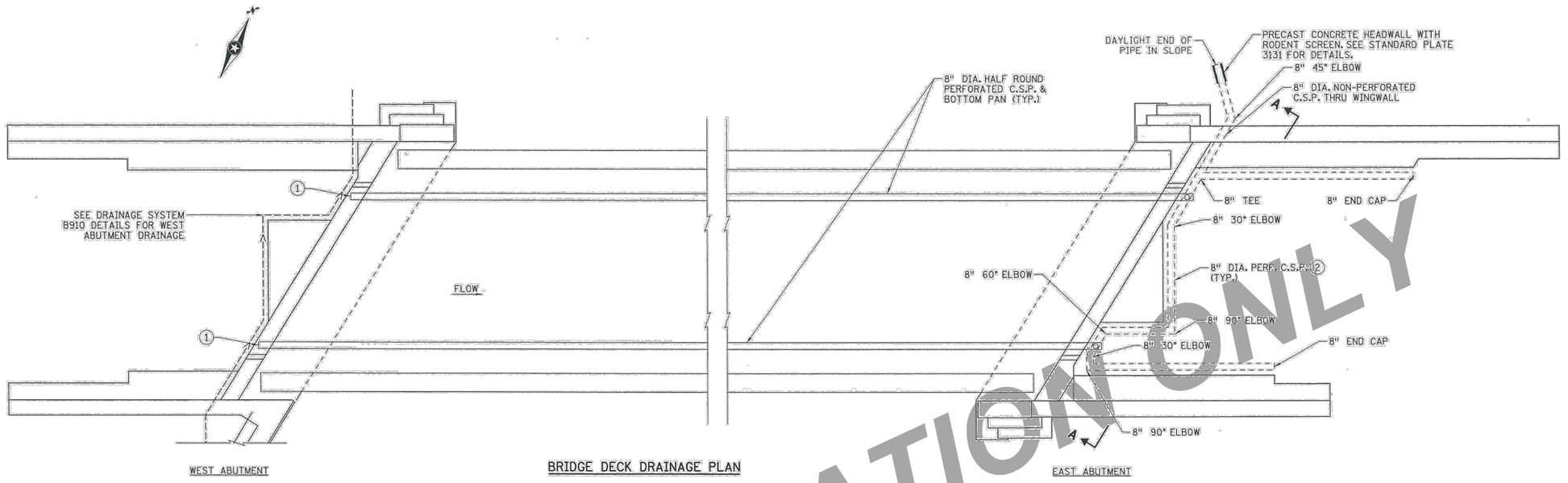

BRIDGE DECK DRAINAGE PLAN

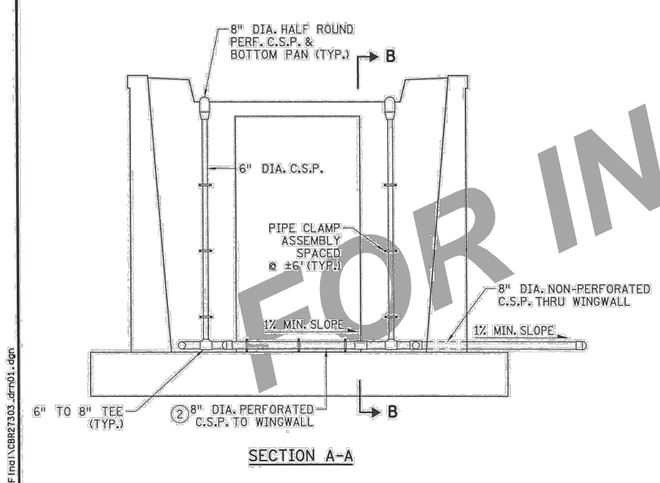

SECTION A-A

SUMMARY OF QUANTITIES : DRAINAGE SYSTEM (BRIDGE DECK)

ITEM	UNIT	QUANTITY
8" DIA. HALF-ROUND PERFORATED C.S.P.	LF	450
8" DIA. PERFORATED C.S.P.	LF	90
8" DIA. C.S.P.	LF	30
6" DIA C.S.P.	LF	41
REDUCER 8" DIA. TO 6" DIA.	EACH	2
END PLATE	EACH	2
COLLAR	EACH	2
BOTTOM PAN	LF	450
TEE CONNECTION (6" TO 8")	EACH	2
TEE CONNECTION (8")	EACH	1
90 DEGREE ELBOW (8")	EACH	2
60 DEGREE ELBOW (8")	EACH	1
45 DEGREE ELBOW (8")	EACH	1
30 DEGREE ELBOW (8")	EACH	2
OUTLET STUB 5" DIA.	EACH	2
PIPE CLAMP ASSEMBLIES	EACH	8
8" END CAP	EACH	2
PRECAST CONCRETE HEADWALL	EACH	1

NOTES:

THE SUMMARY OF QUANTITIES FOR THE DRAINAGE SYSTEM IS AS SHOWN ABOVE. ANY ADDITIONAL MINOR ITEMS OR CHANGES OF QUANTITIES REQUIRED SHALL BE FURNISHED BY THE CONTRACTOR WITH NO ADDITIONAL COMPENSATION. PAYMENT FOR ALL DRAINAGE SYSTEM COMPONENTS WILL BE INCLUDED IN THE SINGLE LUMP SUM PRICE FOR ITEM NO. 2502.601 "DRAINAGE SYSTEM (BRIDGE DECK)".

ALL PIPE SHALL COMPLY WITH SPEC. 3226.

ALL STEEL COMPONENTS OF THE DRAINAGE SYSTEM INCLUDING PIPES, BOTTOM PANS, COVERS, CLAMPS, END PLATES, AND HARDWARE SHALL BE GALVANIZED IN ACCORDANCE WITH SPEC. 3392 AND SPEC. 3394.

(1) TERMINATE DRAIN AT THE BACK OF THE WEST ABUTMENT EXPANSION JOINT BLOCK.

(2) WRAP WITH GEOTEXTILE PER SPEC. 3733, TYPE 1. ATTACH GEOTEXTILE TO PIPE PER SPEC. 2502.

FOR INFORMATION ONLY

NO	DATE	BY	CKD	APPR	REVISION
	03-24-14	JEH	LBR	JMB	

...\Plans\Final\CBR27303_drn01.dgn

SRF Consulting Group, Inc. — Engineers Planners Designers

I hereby certify that this plan, specification, or report was prepared by me or under my direct supervision and that I am a duly licensed Professional Engineer under the laws of the State of Minnesota.

JAMISON BEISSWENGER License # 44648 DATE 3/24/14

S.P. NO. 2734-27303 (TH100=005)

TITLE: DRAINAGE DETAILS (SHEET 1 OF 2)

DES:	LBR	DR:	JEH	APPROVED: 3/24/14
CHK:	JMB	CHK:	LBR	

SHEET NO. B48 OF B68 SHEETS

BRIDGE NO. 27303

DRAFT-WORK IN PROCESS

NO.	DATE	BY	CHECK	DESIGN	REVISION / SUBMITTAL

DESIGNED BY: KAE CHECKED BY: MDJ

DRAWN BY: LMT CHECKED BY: MDJ

AECOM Kimley»Horn

90% SUBMISSION - 01/22/16

METROPOLITAN COUNCIL

SOUTHWEST Green Line LRT Extension

CIVIL - VOLUME 4F
TH 100 FREIGHT RAIL BRIDGE
BRIDGE 27W34
SUPERSTRUCTURE DETAILS 12

DISCIPLINE: STRUCTURES

SHEET NAME: CBR27W34-BRG-REF-001-12

SHEET 44 OF 68

Dec, 11 2015 11:23 am V:\3400_ADC\CAD\SEGMENT E2\PLAN SHEETS\STRUCTURES\T100-FRT\CBR27W34-BRG-REF-001.dwg By: Katie.Ellis

B:15.18 AM
8/24/2014
H:\Projects\B100\BRG\Plans\Final\CBR27303_drn01.dgn

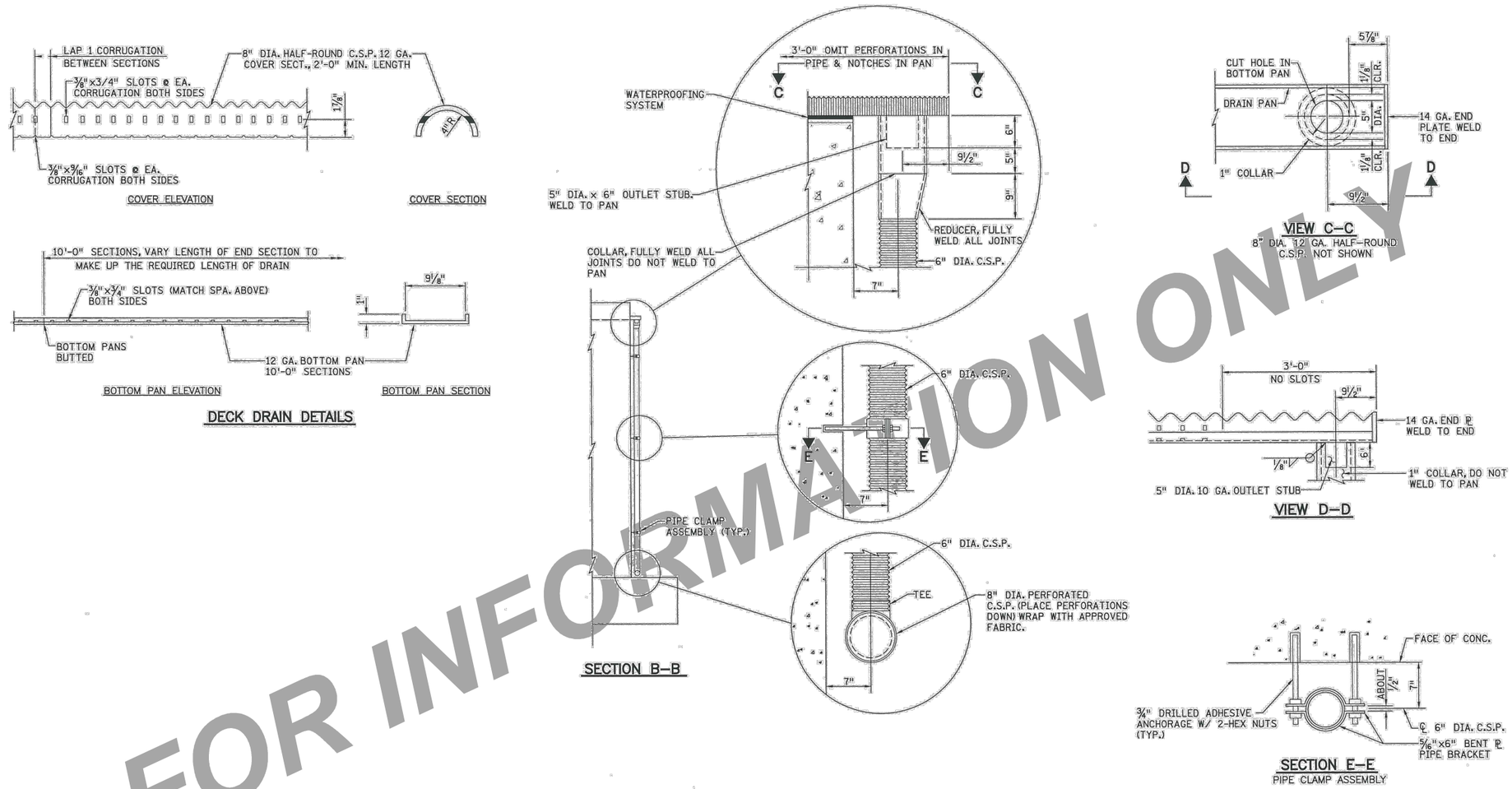

FOR INFORMATION ONLY

NO	DATE	BY	CKD	APPR	REVISION
	03-24-14	JEH	LBR	JMB	

...\Plans\Final\CBR27303_drn02.dgn

SRF Consulting Group, Inc. — Engineers Planners Designers

I hereby certify that this plan, specification, or report was prepared by me or under my direct supervision and that I am a duly Licensed Professional Engineer under the laws of the State of Minnesota.

JAMISON BEISSWENGER — License # 44648 — DATE 3/24/14

S.P. NO. 2734-27303 (TH100=005)

TITLE: DRAINAGE DETAILS (SHEET 2 OF 2)

DES: LBR | DR: JEH | CHK: JMB | CHK: LBR | APPROVED: 3/24/14

SHEET NO. B49 OF B68 SHEETS

BRIDGE NO. 27303

DRAFT-WORK IN PROCESS

NO.	DATE	BY	CHECK	DESIGN	REVISION / SUBMITTAL

DESIGNED BY: KAE | CHECKED BY: MDJ
DRAWN BY: LMT | CHECKED BY: MDJ

AECOM Kimley»Horn

90% SUBMISSION - 01/22/16

METROPOLITAN COUNCIL

SOUTHWEST Green Line LRT Extension

CIVIL - VOLUME 4F
TH 100 FREIGHT RAIL BRIDGE
BRIDGE 27W34
SUPERSTRUCTURE DETAILS 13

DISCIPLINE: STRUCTURES

SHEET NAME: CBR27W34-BRG-REF-001-13

SHEET 45 OF 68

Dec, 11 2015 11:24 am V:\3400_ADC\CAD\SEGMENT E2\PLAN SHEETS\STRUCTURES\T100-FRT\CBR27W34-BRG-REF-001.dwg By: Katie.Ellis

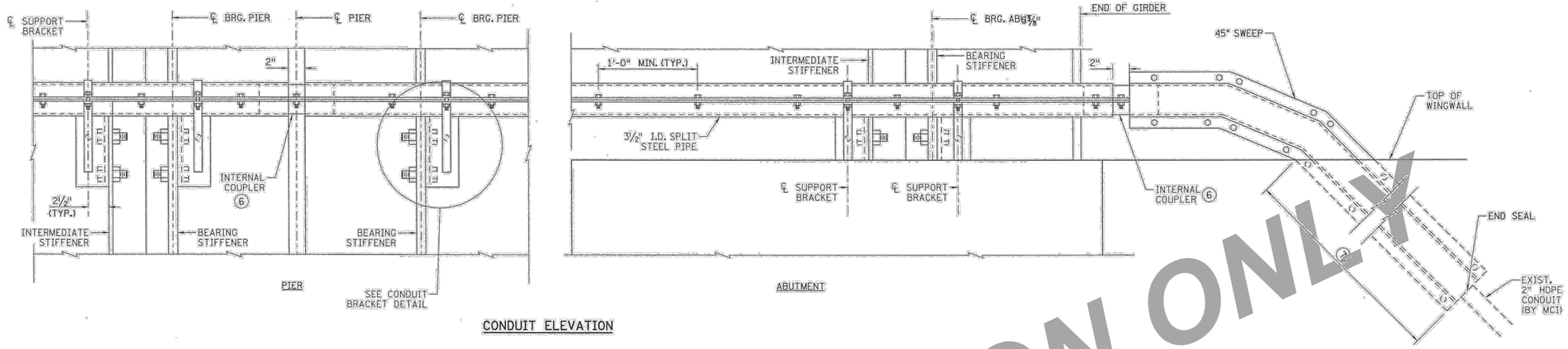

CONDUIT ELEVATION

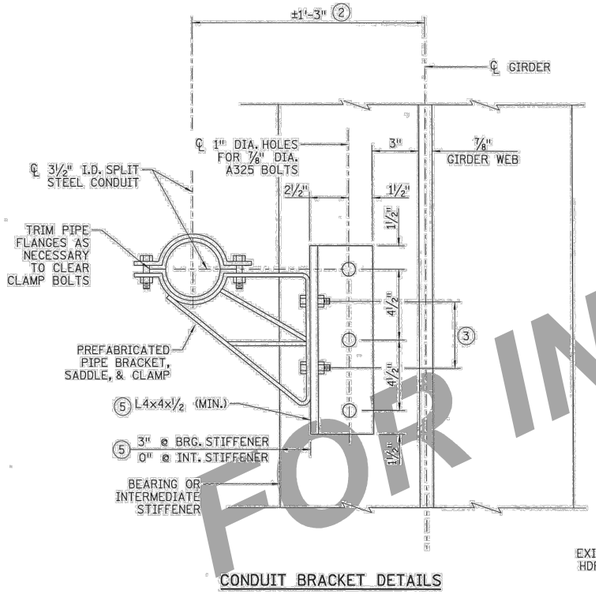

CONDUIT BRACKET DETAILS

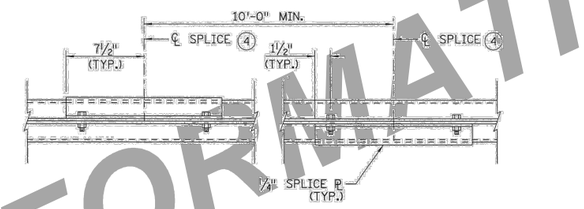

SPLIT STEEL PIPE SPLICE DETAIL

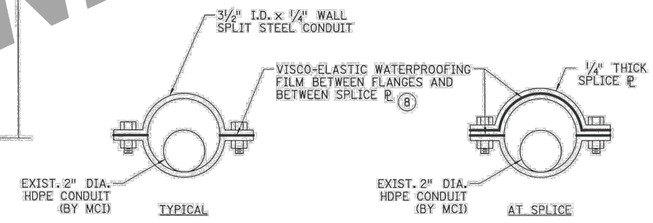

SPLIT STEEL PIPE CROSS SECTION

NOTES:

SPLIT STEEL PIPES AND INTERNAL COUPLERS WILL MEET MnDOT SPEC. 3306 AND WILL BE GALVANIZED PER MnDOT SPEC. 3394.

FASTENERS NOT ATTACHED TO THE BRIDGE SUPERSTRUCTURE WILL MEET MNDOT SPEC. 3391 TYPE A AND INCLUDE LOCKING STYLE NUTS. GALVANIZE HARDWARE PER MnDOT SPEC. 3392.

PIPE BRACKETS WILL BE STEEL MEETING MnDOT SPEC. 3306 AND BE GALVANIZED PER MnDOT SPEC. 3394. BRACKETS WILL BE CAPBABLE OF SUPPORTING THE FULLY LOADED SPLIT STEEL PIPE AND BE APPROVED BY THE ENGINEER PRIOR TO FABRICATION.

(1) ALL MATERIAL LISTED BELOW IS INCLUDED IN PRICE BID FOR "CONDUIT SYSTEM (TELEPHONE)". QUANTITIES LISTED ARE FOR INFORMATIONAL PURPOSES, ANY ADDITIONAL MINOR ITEMS OR CHANGES IN QUANTITIES REQUIRED SHALL BE FURNISHED BY THE CONTRACTOR WITH NO ADDITIONAL COMPENSATION.

(2) DIMENSION MAY VARY BASED ON BRACKET MANUFACTURER. BRACKET WILL BE SIZED SO SPLIT STEEL PIPE CLEARS THE GIRDER END PLATE.

(3) HOLES FOR HARDWARE BY MANUFACTURER. IN NO CASE WILL THE DISTANCE FROM A FASTENER TO THE EDGE OF THE L4x4x½ ANGLE BE LESS THAN 1½". ANY MODIFICATIONS REQUIRED FOR BRACKET FASTENER LOCATIONS SHALL BE BY THE CONTRACTOR WITH NO ADDITIONAL COMPENSATION.

(4) STAGGER SPLICES TOP AND BOTTOM AT 10'-0" MIN. UNLESS APPROVED BY THE ENGINEER.

(5) ANGLE SIZE MAY BE INCREASED AND DISTANCE TO THE STIFFENER EDGE MAY BE DECREASED IN ORDER TO ACHIEVE THE REQUIRED OFFSET FROM GIRDER ℄.

(6) INTERNAL COUPLER SHALL ALLOW FOR A MINIMUM OF 2" OF EXPANSION/CONTRACTION.

(7) EXTEND SPLIT PIPE DUCT TO 2'-0" MIN. BELOW GRADE AND CAP WITH END SEAL. ATTACH PIPE TO ABUTMENT WINGWALL WITH A MINIMUM OF TWO PIPE BRACKETS. PIPE BRACKETS AND ANCHORAGES WILL BE APPROVED BY THE ENGINEER.

(8) APPLY WATERPROOFING AFTER INSTALLATION OF MCI CONDUIT IN SPLIT STEEL PIPE.

SUMMARY OF QUANTITIES : CONDUIT SYSTEM (TELEPHONE) (1)

	UNIT	QUANTITY
3.5" I.D. SPLIT STEEL PIPE	LIN. FT.	250
BRACKET ASSEMBLIES	EACH	50
INTERNAL COUPLER	EACH	3
45 DEGREE SWEEPS	EACH	2
END SEALS	EACH	2

FOR INFORMATION ONLY

8:15:21 AM
12/10/2015
H:\Projects\8100\BRNP\cma\Final\CBR27303_cond01.dgn

NO	DATE	BY	CKD	APPR	REVISION
	03-24-14	JEH	LBR	JMB	

...\Final\CBR27303_cond01.dgn

SRF Consulting Group, Inc. — Engineers Planners Designers

I hereby certify that this plan, specification, or report was prepared by me or under my direct supervision and that I am a duly Licensed Professional Engineer under the laws of the State of Minnesota.

JAMISON BEISSWENGER — DATE 3/24/14 — License # 44648

S.P. NO. 2734-27303 (TH100=005)

TITLE: CONDUIT SYSTEM (TELEPHONE)

DES: JMB	DR: JEH	APPROVED: 3/24/14
CHK: LBR	CHK: JMB	

SHEET NO. B50 OF B68 SHEETS

BRIDGE NO. 27303

DRAFT-WORK IN PROCESS

NO.	DATE	BY	CHECK	DESIGN	REVISION / SUBMITTAL

DESIGNED BY: KAE — CHECKED BY: MDJ

DRAWN BY: LMT — CHECKED BY: MDJ

AECOM Kimley»Horn

90% SUBMISSION - 01/22/16

METROPOLITAN COUNCIL

SOUTHWEST Green Line LRT Extension

CIVIL - VOLUME 4F
TH 100 FREIGHT RAIL BRIDGE
BRIDGE 27W34
SUPERSTRUCTURE DETAILS 14

DISCIPLINE: STRUCTURES

SHEET NAME: CBR27W34-BRG-REF-001-14

SHEET 46 OF 68

Dec, 11 2015 11:24 am V:\3400_ADC\CAD\SEGMENT E2\PLAN SHEETS\STRUCTURES\T100-FRT\CBR27W34-BRG-REF-001.dwg By: Katie.Ellis

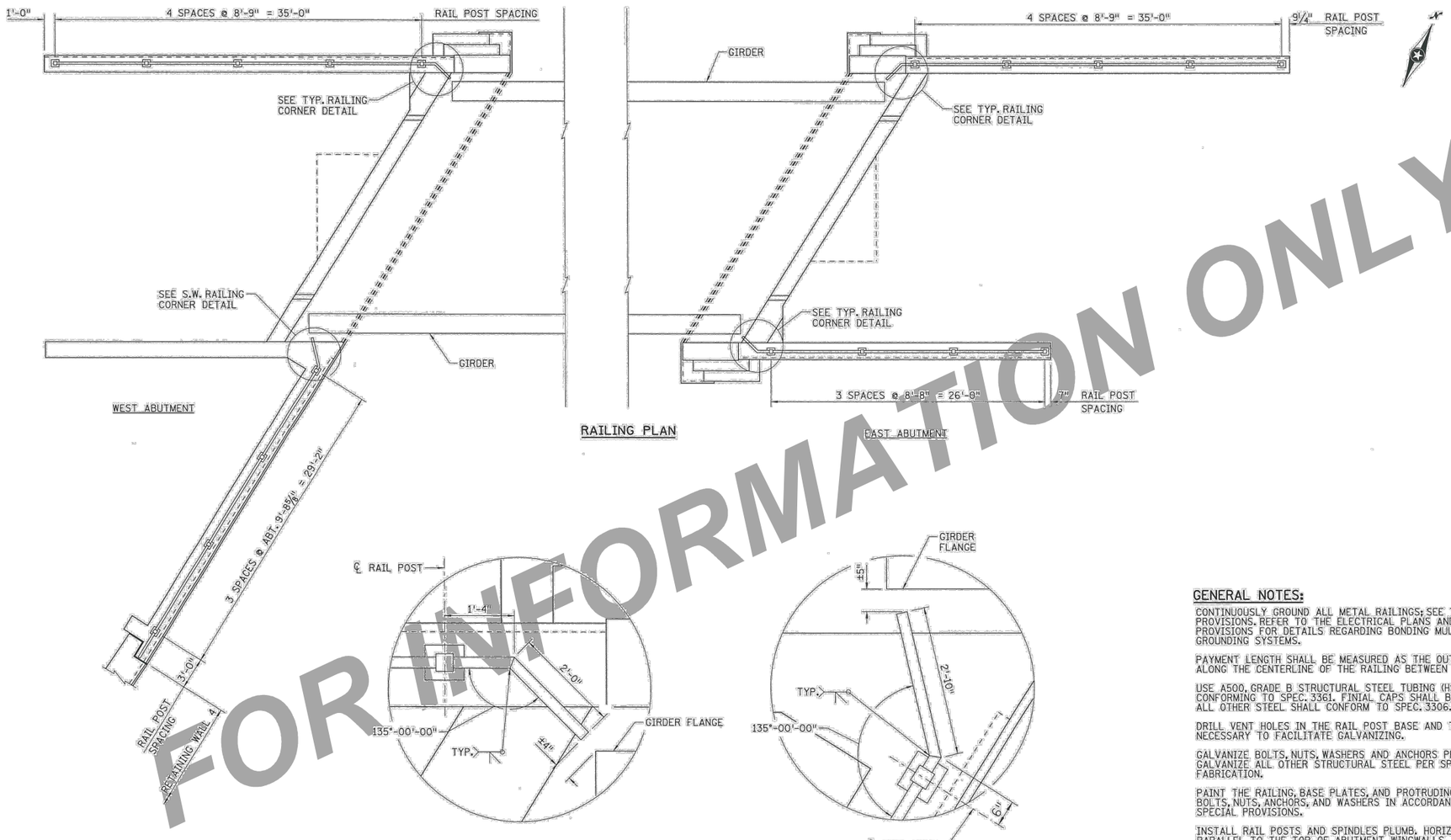

RAILING PLAN

TYP. RAILING CORNER DETAIL

(N.W. RAILING SHOWN - N.E. & S.E. CORNERS SIM.)

S.W. RAILING CORNER DETAIL

GENERAL NOTES:

CONTINUOUSLY GROUND ALL METAL RAILINGS; SEE THE SPECIAL PROVISIONS. REFER TO THE ELECTRICAL PLANS AND ELECTRICAL SPECIAL PROVISIONS FOR DETAILS REGARDING BONDING MULTIPLE ELECTRICAL GROUNDING SYSTEMS.

PAYMENT LENGTH SHALL BE MEASURED AS THE OUT TO OUT LENGTH ALONG THE CENTERLINE OF THE RAILING BETWEEN THE OUTSIDE ENDS.

USE A500, GRADE B STRUCTURAL STEEL TUBING (HSS) IN THE RAIL CONFORMING TO SPEC. 3361. FINIAL CAPS SHALL BE SPEC. 3322. ALL OTHER STEEL SHALL CONFORM TO SPEC. 3306.

DRILL VENT HOLES IN THE RAIL POST BASE AND THE RAIL TUBES AS NECESSARY TO FACILITATE GALVANIZING.

GALVANIZE BOLTS, NUTS, WASHERS AND ANCHORS PER SPEC. 3392. GALVANIZE ALL OTHER STRUCTURAL STEEL PER SPEC. 3394, AFTER FABRICATION.

PAINT THE RAILING, BASE PLATES, AND PROTRUDING PORTIONS OF BOLTS, NUTS, ANCHORS, AND WASHERS IN ACCORDANCE WITH THE SPECIAL PROVISIONS.

INSTALL RAIL POSTS AND SPINDLES PLUMB. HORIZONTAL RAILS SHALL BE PARALLEL TO THE TOP OF ABUTMENT WINGWALLS. SEE ABUTMENT SHEETS FOR TOP OF WALL ELEVATIONS.

SEE SPECIAL PROVISIONS FOR REQUIREMENTS NOT INCLUDED ON THIS SHEET AND FOR BASIS OF PAYMENT.

FOR INFORMATION ONLY

NO	DATE	BY	CKD	APPR	REVISION
	03-24-14	JEH	LBR	JMB	

...\Plans\Final\CBR27303_ral01.dgn

SRF Consulting Group, Inc. — Engineers Planners Designers

I hereby certify that this plan, specification, or report was prepared by me or under my direct supervision and that I am a duly Licensed Professional Engineer under the laws of the State of Minnesota.

JAMISON BEISSWENGER — License # 44648 — DATE 3/24/14

S.P. NO. 2734-27303 (TH100=005)

TITLE: RAILING DETAILS (SHEET 1 OF 2)

DES: JMB DR: JEH CHK: LBR CHK: JMB APPROVED: 3/24/14

SHEET NO. B51 OF B68 SHEETS

BRIDGE NO. 27303

DRAFT-WORK IN PROCESS

NO.	DATE	BY	CHECK	DESIGN	REVISION / SUBMITTAL

DESIGNED BY: KAE CHECKED BY: MDJ
DRAWN BY: LMT CHECKED BY: MDJ

AECOM Kimley»Horn

90% SUBMISSION - 01/22/16

METROPOLITAN COUNCIL — SOUTHWEST Green Line LRT Extension

CIVIL - VOLUME 4F
TH 100 FREIGHT RAIL BRIDGE
BRIDGE 27W34
SUPERSTRUCTURE DETAILS 15

DISCIPLINE: STRUCTURES

SHEET NAME: CBR27W34-BRG-REF-001-15

SHEET 47 OF 68

Dec, 11 2015 11:24 am V:\3400_ADC\CAD\SEGMENT E2\PLAN SHEETS\STRUCTURES\T100-FRT\CBR27W34-BRG-REF-001.dwg By: Katie.Ellis

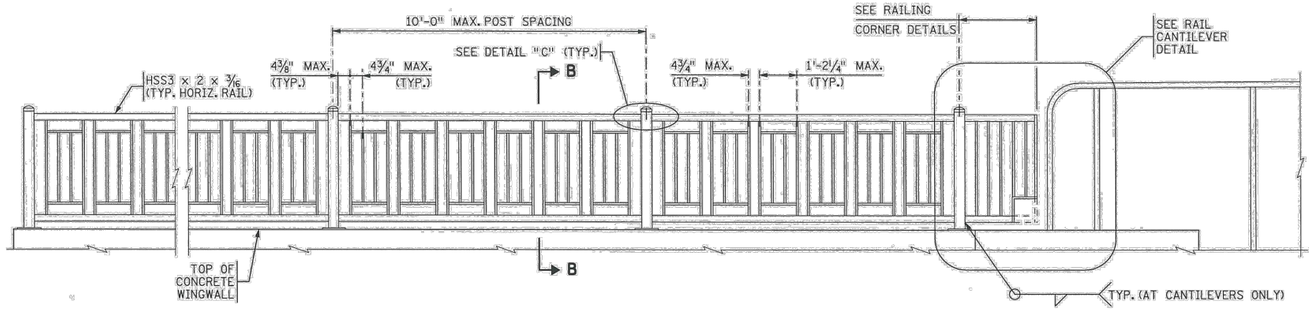

INSIDE ELEVATION OF RAILING

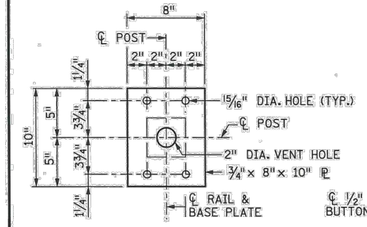

BASE PLATE

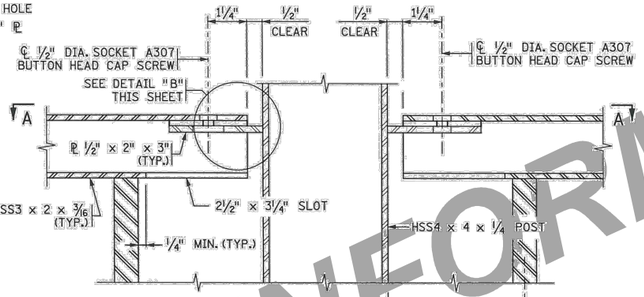

DETAIL "C"

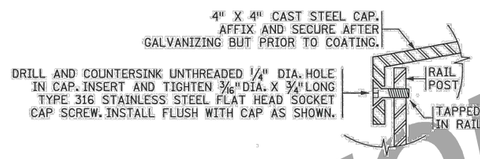

DETAIL "D"

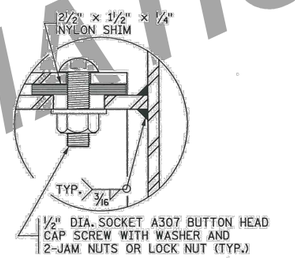

DETAIL "B"

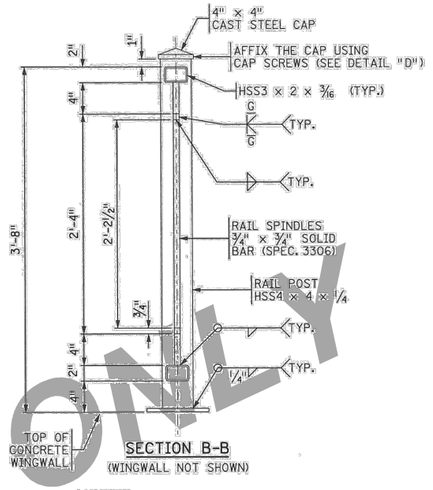

SECTION B-B
(WINGWALL NOT SHOWN)

NOTES:

FOR RAILING GENERAL NOTES SEE SHEET NO. B51.

1. ADHESIVE ANCHORAGE WITH 5/8" DIA. ANCHOR ROD PER SPEC. 3385, TYPE A WITH HEX NUT AND WASHER. PROVIDE AN ADHESIVE WITH A MINIMUM CHARACTERISTIC BOND STRENGTH IN UNCRACKED CONCRETE OF 1.5 KSI. EMBED THE ANCHORAGE NO LESS THAN 5" REGARDLESS OF CHARACTERISTIC BOND STRENGTH. DRILL THROUGH REINFORCEMENT (IF ENCOUNTERED) TO ACHIEVE MINIMUM EMBEDMENT. ENSURE HEX NUT IS IN CONTACT WITH THE ADJACENT SURFACE AND TORQUE TO 60 FT-LBS UNLESS A HIGHER TORQUE IS RECOMMENDED BY THE MANUFACTURER. PROOF LOAD TO 6.9 KIPS. SEE SPECIAL PROVISIONS FOR ADDITIONAL REQUIREMENTS.
2. OPENING IN RAILING FOR CONDUIT SYSTEM (MCI); NORTH SIDE OF BRIDGE ONLY.
3. SHOP INSTALL CAST STEEL CAP FIRMLY SEATED TO TOP OF POST SUCH THAT THE CAP DOES NOT ROCK OR WOBBLE.

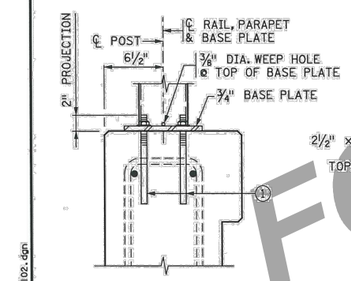

ANCHOR DETAIL

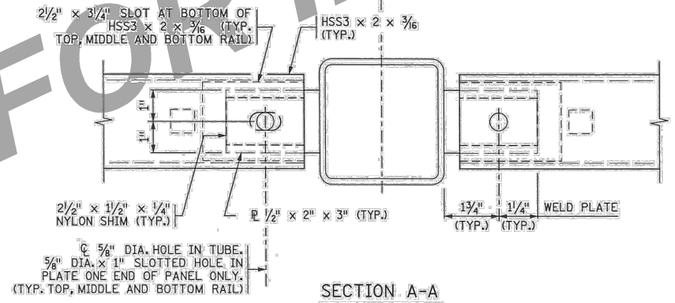

SECTION A-A

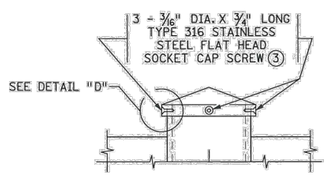

RAILPOST CAP MACHINE BOLT DETAIL
PLACE 3 CAP SCREWS, TWO PARALLEL TO RAILING AS SHOWN, AND ONE ON OUTSIDE FACE. (3)

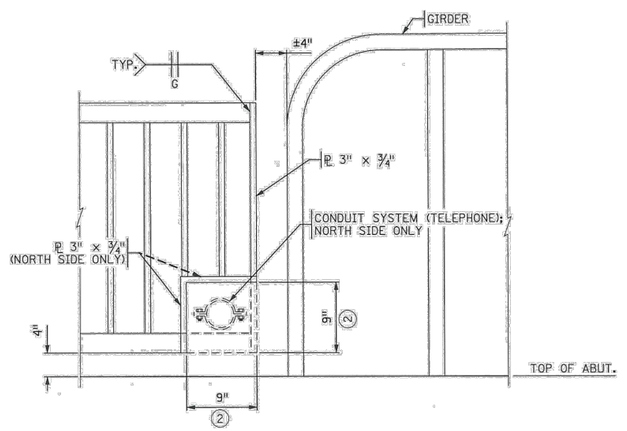

RAIL CANTILEVER DETAIL

NO	DATE	BY	CKD	APPR	REVISION
	03-24-14	JEH	LBR	JMB	

SRF Consulting Group, Inc. — Engineers Planners Designers

I hereby certify that this plan, specification, or report was prepared by me or under my direct supervision and that I am a duly Licensed Professional Engineer under the laws of the State of Minnesota.

JAMISON BEISSWENGER — DATE 3/24/14 — License # 44648

S.P. NO. 2734-27303 (TH100=005)

TITLE: RAILING DETAILS (SHEET 2 OF 2)

DES: JMB	DR: JEH	APPROVED: 3/24/14
CHK: LBR	CHK: JMB	

SHEET NO. B52 OF B68 SHEETS

BRIDGE NO. 27303

8:15:24 AM
H:\Projects\8100\BR\Plans\Final\CBR27303_rail02.dgn
...\Plans\Final\CBR27303_rail02.dgn

FOR INFORMATION ONLY

DRAFT-WORK IN PROCESS

NO.	DATE	BY	CHECK	DESIGN	REVISION / SUBMITTAL

DESIGNED BY: KAE — CHECKED BY: MDJ
DRAWN BY: LMT — CHECKED BY: MDJ

AECOM Kimley»Horn

90% SUBMISSION - 01/22/16

METROPOLITAN COUNCIL

SOUTHWEST Green Line LRT Extension

CIVIL - VOLUME 4F
TH 100 FREIGHT RAIL BRIDGE
BRIDGE 27W34
SUPERSTRUCTURE DETAILS 16

DISCIPLINE: STRUCTURES

SHEET NAME: CBR27W34-BRG-REF-001-16

SHEET 48 OF 68

Dec, 11 2015 11:24 am V:\3400_ADC\CAD\SEGMENT E2\PLAN SHEETS\STRUCTURES\T100-FRT\CBR27W34-BRG-REF-001.dwg By: Katie.Ellis

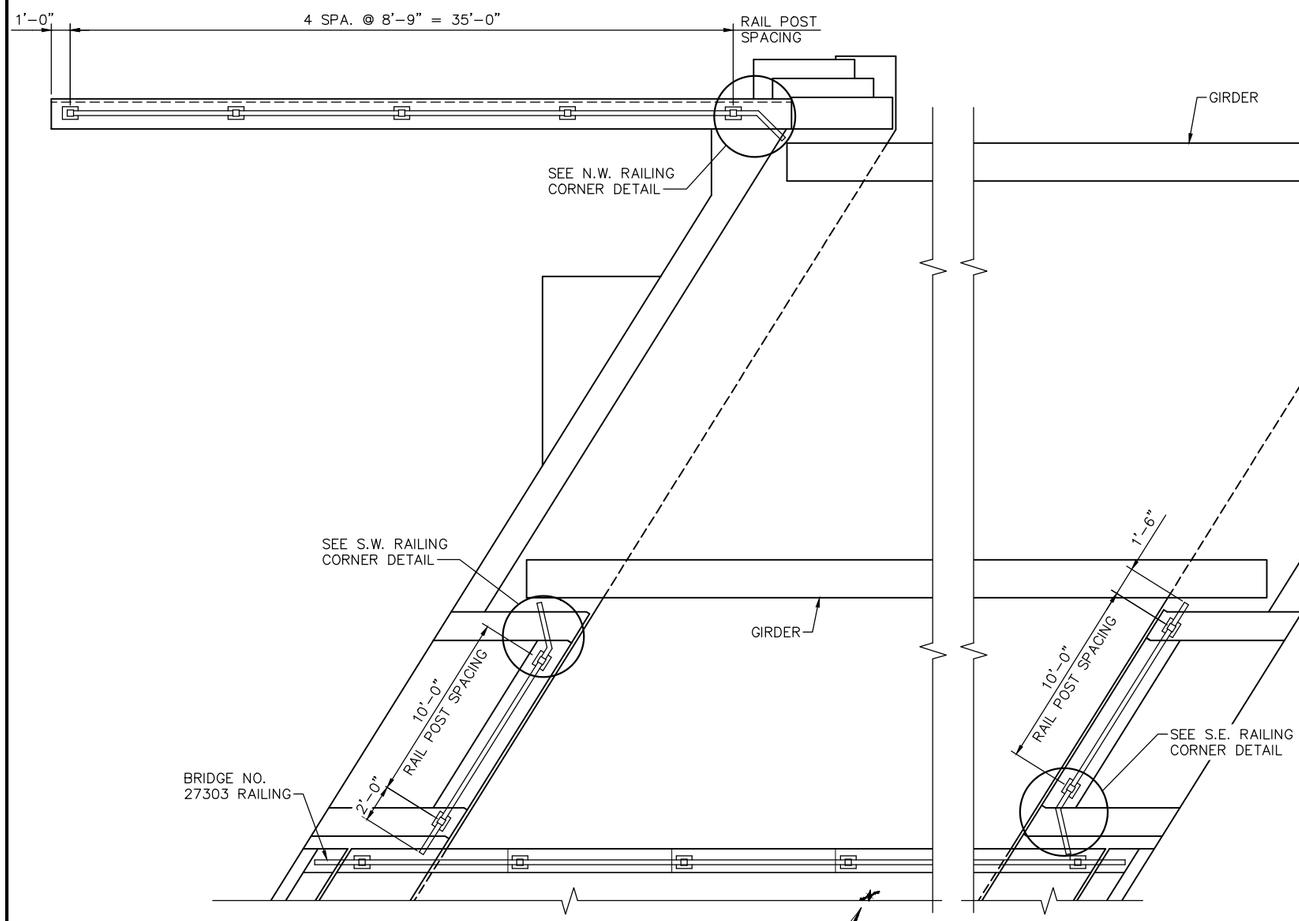

RAILING PLAN

NOTES:

CONTINUOUSLY GROUND ALL METAL RAILINGS; SEE THE SPECIAL PROVISIONS.

USE A500, GRADE B STRUCTURAL STEEL TUBING (HSS) IN THE RAIL CONFORMING TO SPEC. 3361. FINIAL CAPS SHALL BE SPEC. 3322. ALL OTHER STEEL SHALL CONFORM TO SPEC. 3306.

DRILL VENT HOLES IN THE RAIL POST BASE AND THE RAIL TUBES AS NECESSARY TO FACILITATE GALVANIZING.

GALVANIZE BOLTS, NUTS, WASHERS AND ANCHORS PER SPEC. 3392. GALVANIZE ALL OTHER STRUCTURAL STEEL PER SPEC. 3394, AFTER FABRICATION.

PAINT THE RAILING, BASE PLATES, AND PROTRUDING PORTIONS OF BOLTS, NUTS, ANCHORS, AND WASHERS IN ACCORDANCE WITH THE SPECIAL PROVISIONS.

INSTALL RAIL POSTS AND SPINDLES PLUMB. HORIZONTAL RAILS SHALL BE PARALLEL TO THE TOP OF ABUTMENT WINGWALLS. SEE ABUTMENT SHEETS FOR TOP OF WALL ELEVATIONS.

SEE SPECIAL PROVISIONS FOR REQUIREMENTS NOT INCLUDED ON THIS SHEET.

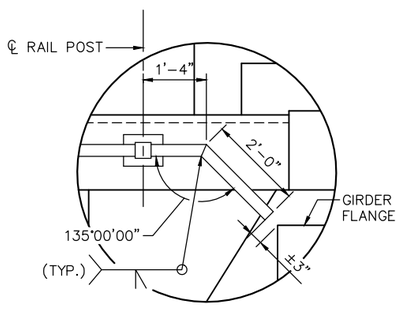

N.W. RAILING CORNER DETAIL

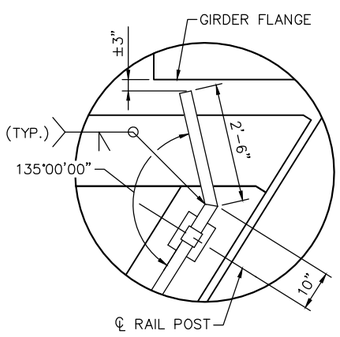

S.W. RAILING CORNER DETAIL

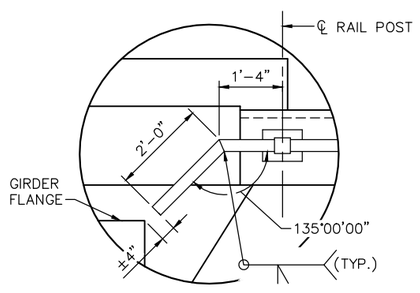

N.E. RAILING CORNER DETAIL

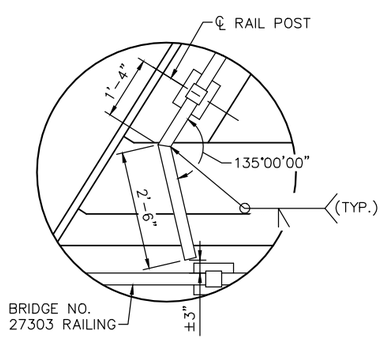

S.E. RAILING CORNER DETAIL

NO.	DATE	BY	CHECK	DESIGN	REVISION / SUBMITTAL

DESIGNED BY: KAE | CHECKED BY: MDJ
DRAWN BY: LMT | CHECKED BY: MDJ

AECOM Kimley»Horn

90% SUBMISSION - 01/22/16

METROPOLITAN COUNCIL

SOUTHWEST Green Line LRT Extension

CIVIL - VOLUME 4F
TH 100 FREIGHT RAIL BRIDGE
BRIDGE 27W34
RAILING DETAILS 1

DISCIPLINE: STRUCTURES
SHEET NAME: CBR27W34-BRG-RAL-001

SHEET 49 OF 68

Dec, 11 2015 11:24 am V:\3400_ADC\CAD\SEGMENT E2\PLAN SHEETS\STRUCTURES\T100-FRT\CBR27W34-BRG-RAL-001.dwg By: Katie.Ellis

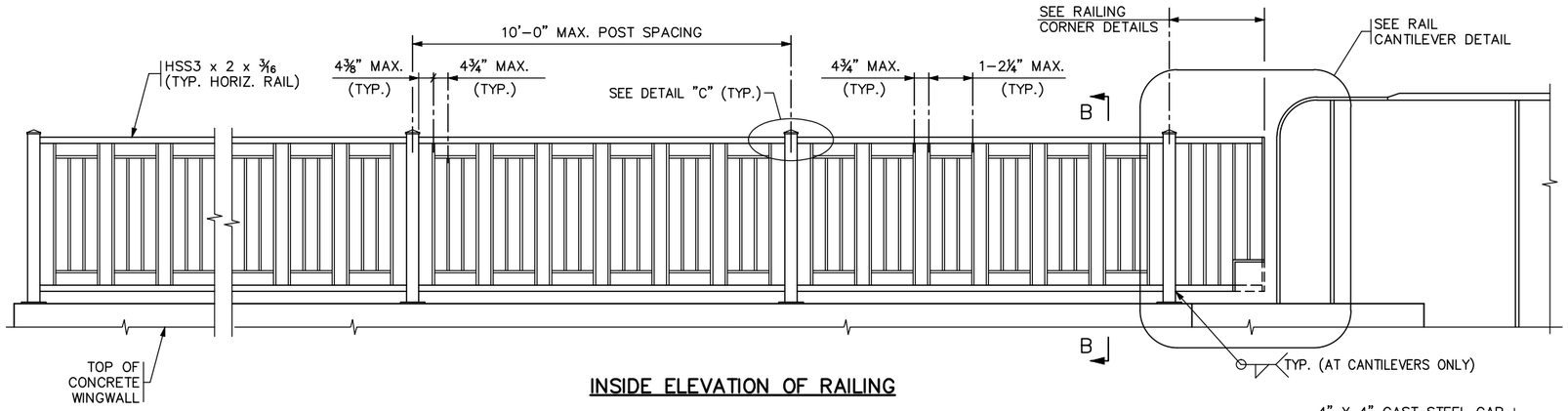

INSIDE ELEVATION OF RAILING

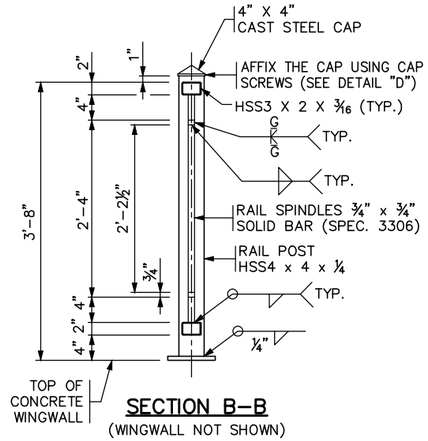

SECTION B–B

(WINGWALL NOT SHOWN)

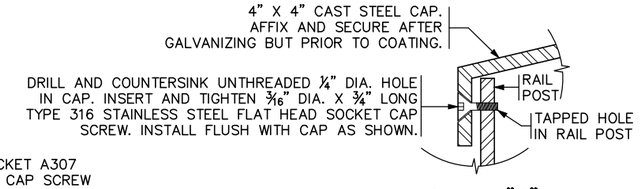

DETAIL "D"

NOTES:

FOR RAILING GENERAL NOTES SEE SHEET NO. __.

1. ADHESIVE ANCHORAGE WITH 5/8" DIA. ANCHOR ROD PER SPEC. 3385, TYPE A WITH HEX NUT AND WASHER. PROVIDE AN ADHESIVE WITH A MINIMUM CHARACTERISTIC BOND STRENGTH IN UNCRACKED CONCRETE OF 1.5 KSI. EMBED THE ANCHORAGE NO LESS THAN 5" REGARDLESS OF CHARACTERISTIC BOND STRENGTH. DRILL THROUGH REINFORCEMENT (IF ENCOUNTERED) TO ACHIEVE MINIMUM EMBEDMENT. ENSURE HEX NUT IS IN CONTACT WITH THE ADJACENT SURFACE AND TORQUE TO 60 FT–LBS UNLESS A HIGHER TORQUE IS RECOMMENDED BY THE MANUFACTURER. PROOF LOAD TO 6.9 KIPS. SEE SPECIAL PROVISIONS FOR ADDITIONAL REQUIREMENTS.
2. OPENING IN RAILING FOR CONDUIT SYSTEM (MCI); NORTH SIDE OF BRIDGE ONLY.
3. SHOP INSTALL CAST STEEL CAP FIRMLY SEATED TO TOP OF POST SUCH THAT THE CAP DOES NOT ROCK OR WOBBLE.

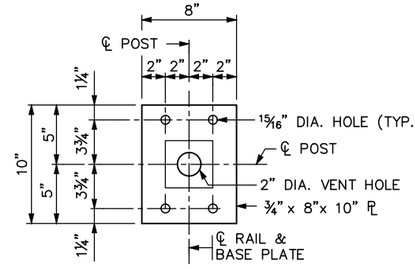

BASE PLATE

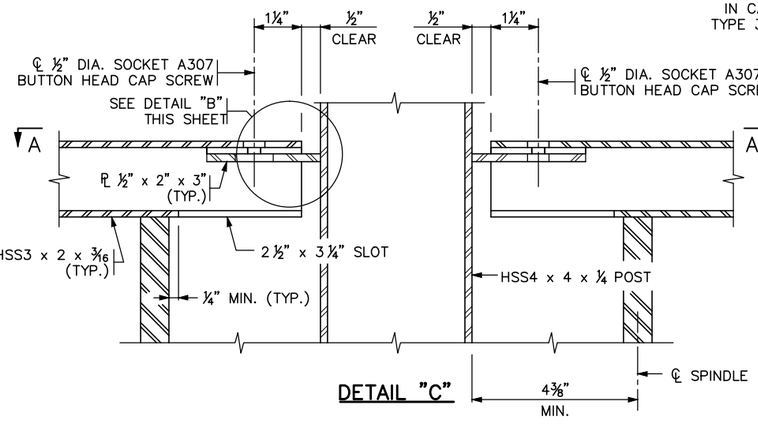

DETAIL "C"

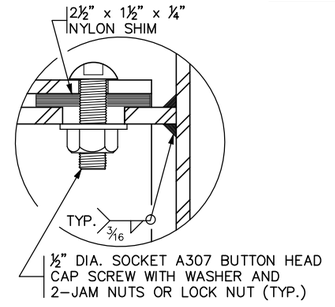

DETAIL "B"

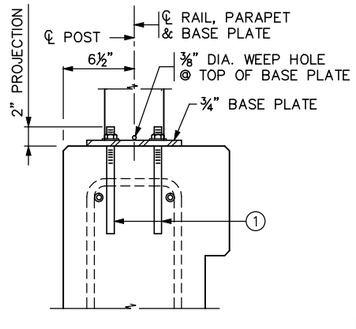

ANCHOR DETAIL

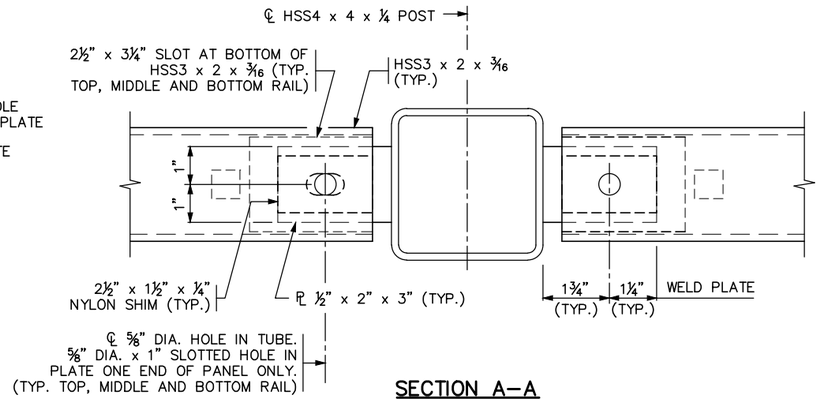

SECTION A–A

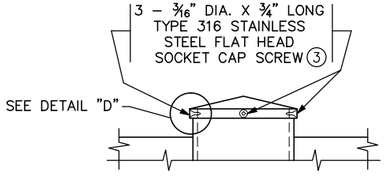

RAILPOST CAP MACHINE BOLT DETAIL

PLACE 3 CAP SCREWS, TWO PARALLEL TO RAILING AS SHOWN, AND ONE ON OUTSIDE FACE. (3)

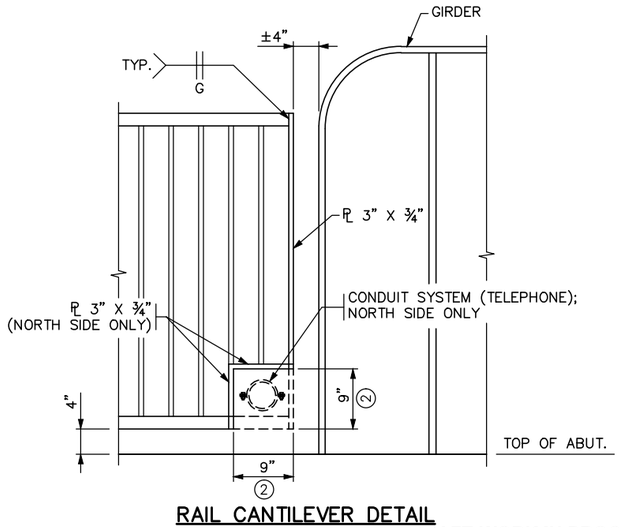

RAIL CANTILEVER DETAIL

DRAFT-WORK IN PROCESS

NO.	DATE	BY	CHECK	DESIGN	REVISION / SUBMITTAL

DESIGNED BY: KAE | CHECKED BY: MDJ
DRAWN BY: LMT | CHECKED BY: MDJ

AECOM Kimley»Horn

90% SUBMISSION - 01/22/16

METROPOLITAN COUNCIL

SOUTHWEST Green Line LRT Extension

CIVIL - VOLUME 4F
TH 100 FREIGHT RAIL BRIDGE
BRIDGE 27W34
RAILING DETAILS 2

DISCIPLINE: STRUCTURES
SHEET NAME: CBR27W34-BRG-RAL-002

SHEET 50 OF 68

Dec, 11 2015 11:25 am V:\3400_ADC\CAD\SEGMENT E2\PLAN SHEETS\STRUCTURES\T100-FRT\CBR27W34-BRG-RAL-002.dwg By: Katie.Ellis

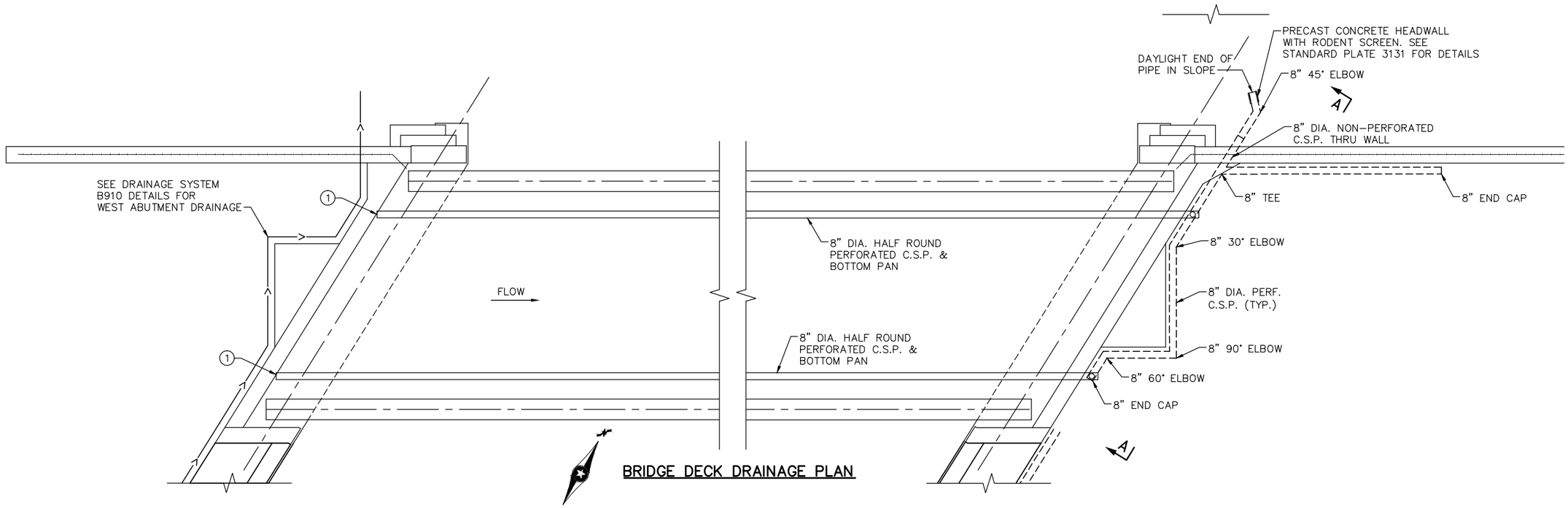

BRIDGE DECK DRAINAGE PLAN

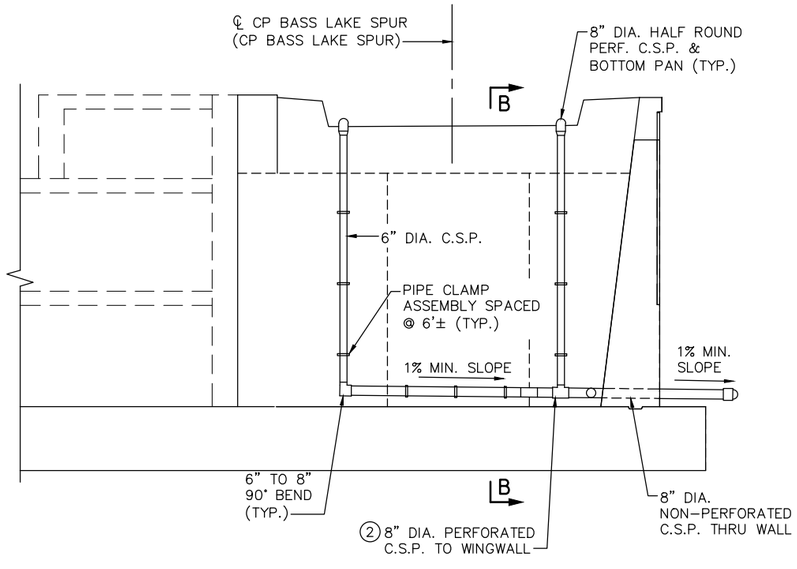

SECTION A-A

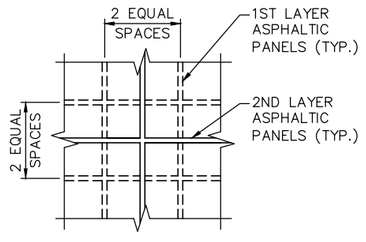

TYPICAL ASPHALT PANEL PLACEMENT

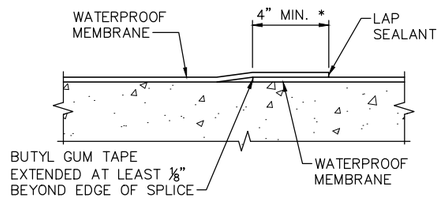

BUTYL RUBBER MEMBRANE OR EPDM WATERPROOFING SPLICE DETAIL

* ALL CONTACT SURFACES TO BE THOROUGHLY CLEANED & CEMENTED

NOTES:

ALL PIPE SHALL COMPLY WITH SPEC. 3326.

ALL STEEL COMPONENTS OF THE DRAINAGE SYSTEM INCLUDING PIPES, BOTTOM PANS, COVERS, CLAMPS, END PLATES, AND HARDWARE SHALL BE GALVANIZED IN ACCORDANCE WITH SPEC. 3392 AND SPEC. 3394.

SEE SHEET 40 FOR WATERPROOFING DETAILS AT ABUTMENTS AND PIER.

(1) TERMINATE DRAIN AT THE BACK OF THE WEST ABUTMENT EXPANSION JOINT BLOCK.

(2) WRAP WITH GEOTEXTILE PER SPEC. 3733, TYPE 1. ATTACH GEOTEXTILE TO PIPE PER SPEC. 2502.

DRAFT-WORK IN PROCESS

NO.	DATE	BY	CHECK	DESIGN	REVISION / SUBMITTAL

DESIGNED BY: KAE CHECKED BY: MDJ
DRAWN BY: LMT CHECKED BY: MDJ

AECOM Kimley»Horn

90% SUBMISSION - 01/22/16

METROPOLITAN COUNCIL

SOUTHWEST Green Line LRT Extension

CIVIL - VOLUME 4F
TH 100 FREIGHT RAIL BRIDGE
BRIDGE 27W34
DECK DRAINAGE AND WATERPROOFING 1

DISCIPLINE: STRUCTURES
SHEET NAME: CBR27W34-BRG-DRN-001-1

SHEET 51 OF 68

Dec, 11 2015 11:25 am V:\3400_ADC\CAD\SEGMENT E2\PLAN SHEETS\STRUCTURES\T100-FRT\CBR27W34-BRG-DRN-001.dwg By: Katie.Ellis

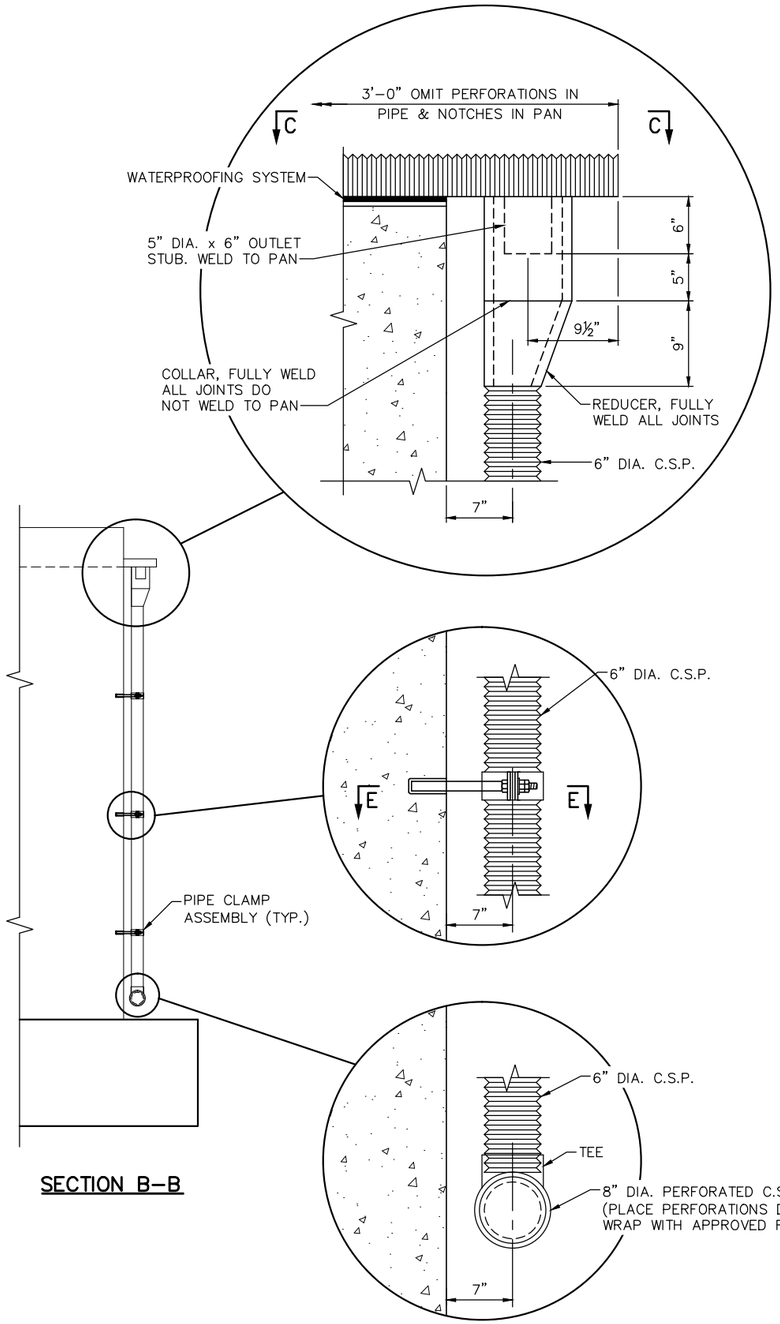

SECTION B–B

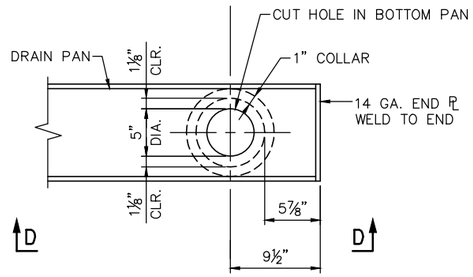

VIEW C–C

(8" DIA. 12 GA. HALF–ROUND C.S.P. NOT SHOWN)

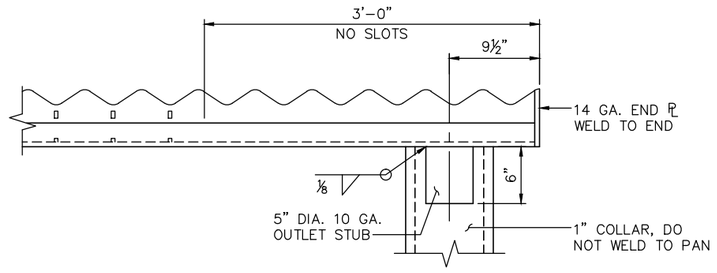

VIEW D–D

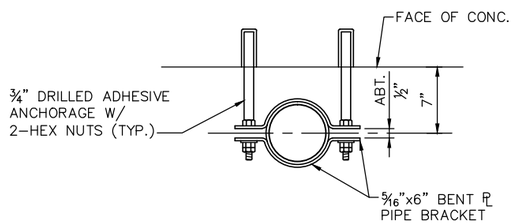

SECTION E–E

(PIPE CLAMP ASSEMBLY)

NOTES:

PROVIDE DISASSEMBLY AND RECONNECTION TO SUPERSTRUCTURE DRAINAGE. SEE EXISTING SUPERSTRUCTURE PLANS ON SHEET 45 FOR INFORMATION.

DRAFT-WORK IN PROCESS

NO.	DATE	BY	CHECK	DESIGN	REVISION / SUBMITTAL

DESIGNED BY: KAE CHECKED BY: MDJ
DRAWN BY: LMT CHECKED BY: MDJ

AECOM Kimley»Horn

90% SUBMISSION - 01/22/16

METROPOLITAN COUNCIL

SOUTHWEST Green Line LRT Extension

CIVIL - VOLUME 4F
TH 100 FREIGHT RAIL BRIDGE
BRIDGE 27W34
DECK DRAINAGE AND WATERPROOFING 2

DISCIPLINE: STRUCTURES

SHEET NAME: CBR27W34-BRG-DRN-001-2

SHEET 52 OF 68

Dec, 11 2015 11:25 am V:\3400_ADC\CAD\SEGMENT E2\PLAN SHEETS\STRUCTURES\T100-FRT\CBR27W34-BRG-DRN-001.dwg By: Katie.Ellis

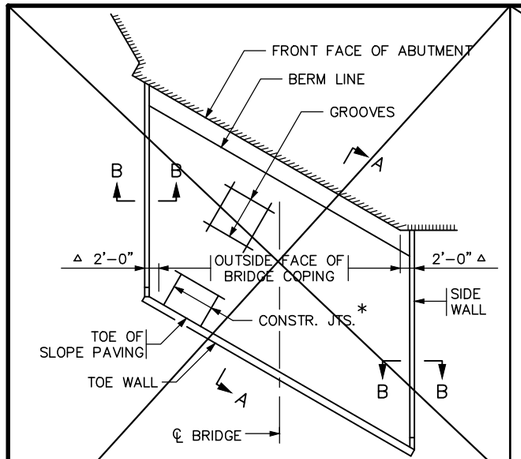

LAYOUT FOR SLOPES
1:2 OR FLATTER

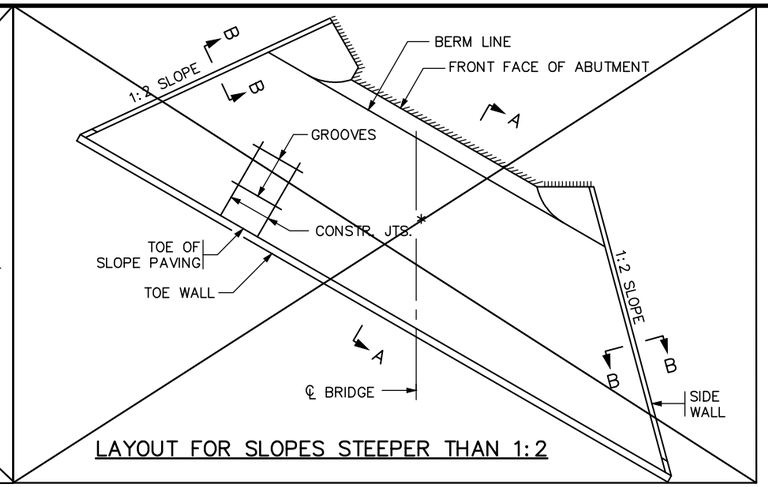

LAYOUT FOR SLOPES STEEPER THAN 1:2

△ 2'–0" FOR TANGENT BRIDGE SUPERSTRUCTURES. VARIES 2'–0" MINIMUM FOR CURVED BRIDGE SUPERSTRUCTURE.

* VERTICAL CONSTRUCTION JOINTS MAY BE CONSTRUCTED PARALLEL TO ℄ OF BRIDGE FOR SKEWS TO 10° ONLY.

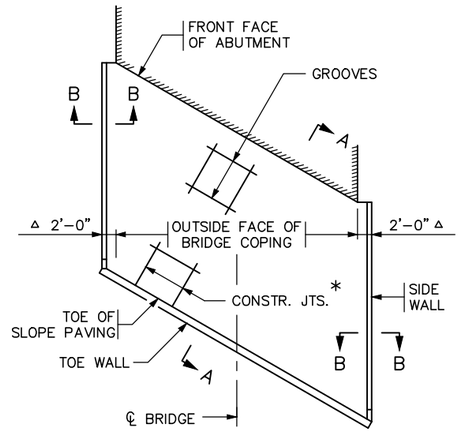

LAYOUT FOR SLOPES
AT ABUTMENTS WITH
8' OR GREATER EXPOSURE

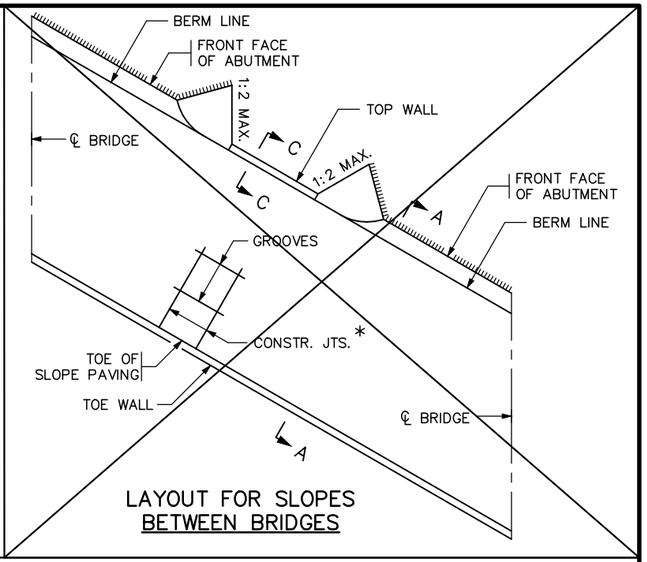

LAYOUT FOR SLOPES
BETWEEN BRIDGES

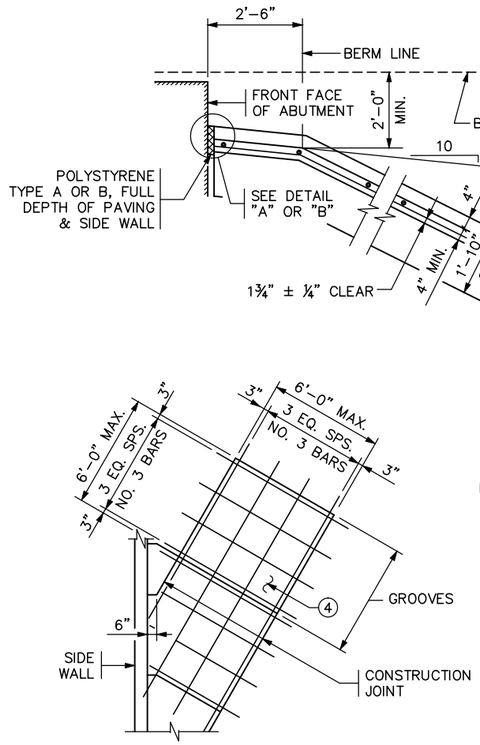

SECTION A–A

1:2 SLOPE SHOWN

PAVING DETAIL

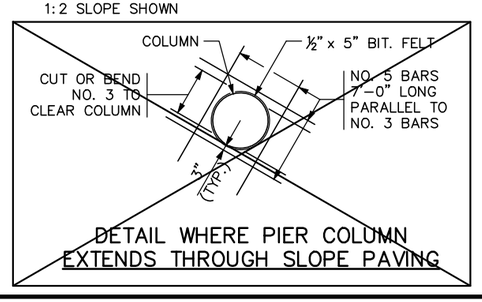

DETAIL WHERE PIER COLUMN
EXTENDS THROUGH SLOPE PAVING

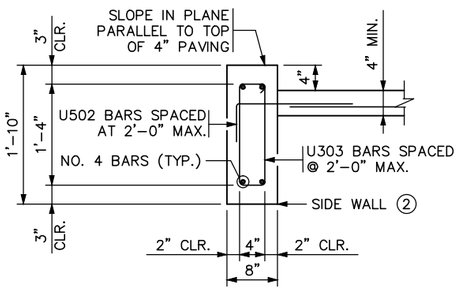

SECTION B–B

NORMAL TO SLOPE

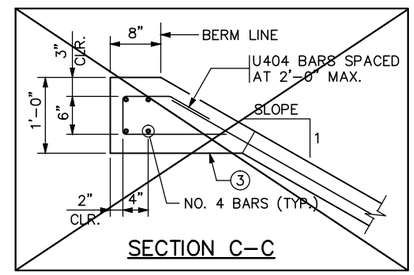

SECTION C–C

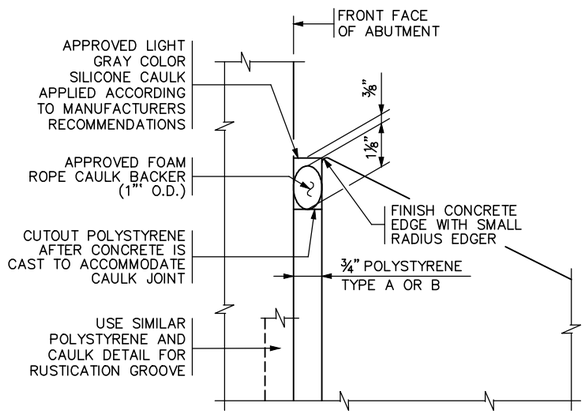

DETAIL "A"

ABUTMENTS WITH RUSTICATION

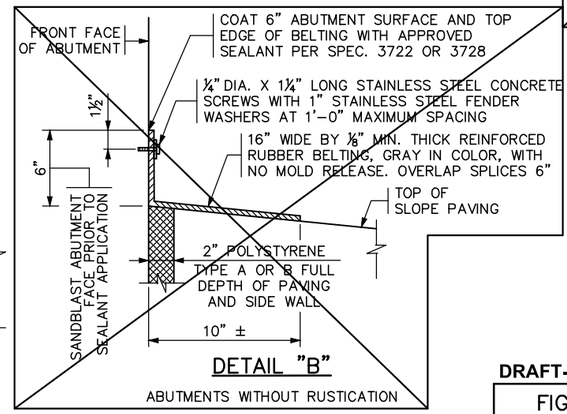

DETAIL "B"

ABUTMENTS WITHOUT RUSTICATION

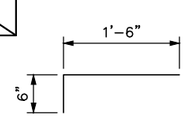

U502

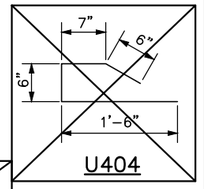

U404

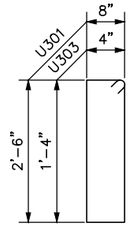

U301 & U303

CONCRETE & REINFORCEMENT UNIT QUANTITIES

① 0.111 CU. YD. OF CONCRETE/LIN. FT.
8.37 LBS. OF REINFORCEMENT/LIN FT.

② 0.046 CU. YD. OF CONCRETE/LIN. FT.
4.46 LBS. OF REINFORCEMENT/LIN FT.

③ 0.058 CU. YD. OF CONCRETE/LIN. FT.
3.70 LBS. OF REINFORCEMENT/LIN FT.
BASED ON A SLOPE OF 1:2.

④ 0.111 CU. YD. OF CONCRETE/SQ. YD.
4.50 LBS. OF REINFORCEMENT/SQ. YD.

GENERAL NOTE

SLOPES ARE EXPRESSED AS A RATIO OF VERTICAL DISTANCE: HORIZONTAL DISTANCE.

SLOPE PAVING PER SPEC. 2514.

DRAFT-WORK IN PROCESS

FIG. 5–397.301

REVISION: 09–11–2014

APPROVED: SEPTEMBER 26, 2003

Daniel L. Morgan
STATE BRIDGE ENGINEER

CERTIFIED BY _____ LICENSED PROFESSIONAL ENGINEER _____ DATE

NAME: MATTHEW D. JENSEN LIC. NO. 44537

TITLE: CONCRETE SLOPE PAVING UNDER BRIDGES

DES: KAE	DR: LMT	APPROVED:	BRIDGE NO.
CHK: MDJ	CHK: MDJ		27W34

SHEET NO. 53 OF 68 SHEETS

Dec, 11 2015 11:26 am V:\3400_ADC\CAD\SEGMENT E2\PLAN SHEETS\STRUCTURES\T100-FRT\CBR27W34-BRG-DTL-001.dwg By: Katie.Ellis

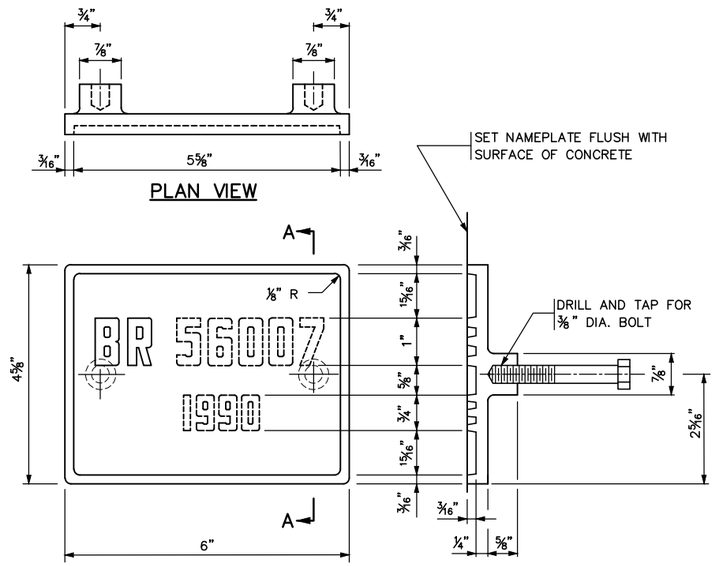

THE DASHED NUMBERS SHOWN ABOVE ARE FOR ILLUSTRATION.
DATA TO BE SHOWN ON NAMEPLATE IS AS FOLLOWS:

BRIDGE 27W34

YEAR 2016



NUMBERS FOR NAMEPLATE

NOTES:

MATERIAL SHALL COMPLY WITH SPEC. 3327.

LETTERS AND NUMBERS SHALL CONFORM TO THOSE SHOWN.

DRAFT ON LETTERS AND NUMBERS SHALL NOT BE MORE THAN 3" IN 12".

HORIZONTAL SPACING OF LETTERS AND NUMBERS SHALL PRODUCE A BALANCED LAYOUT IN PROPORTION TO SPACING SHOWN.

TOP SURFACE OF LETTERS, NUMBERS AND FRAMES SHALL BE BURNISHED.

FURNISH 2 STEEL BOLTS 3/8 " DIA. x 3" LONG WITH EACH PLATE.

ALL DIMENSIONS FOR 3/4" HIGH LETTERS AND NUMBERS SHALL BE IN DIRECT PROPORTION TO THOSE SHOWN FOR THE 1" HIGH LETTERS AND NUMBERS.

APPROVED: NOVEMBER 22, 2002	STATE OF MINNESOTA DEPARTMENT OF TRANSPORTATION	REVISION 09–11–2014	DETAIL NO.
STATE BRIDGE ENGINEER	BRIDGE NAMEPLATE (FOR NEW BRIDGES)		B101

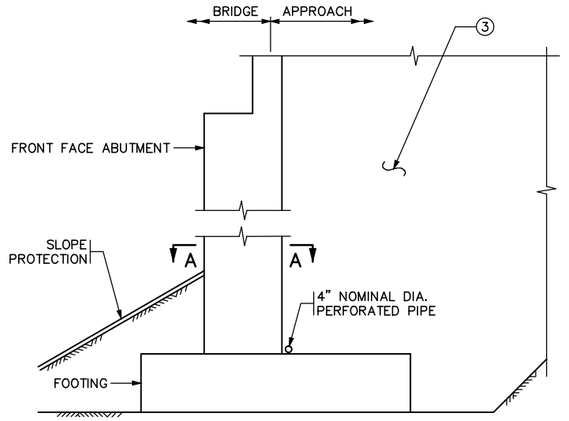

SECTION THROUGH PARAPET AND SEMI–INTEGRAL ABUTMENTS

NOTES:

~~PAYMENT WILL BE INCLUDED IN THE SINGLE LUMP SUM PRICE FOR "DRAINAGE SYSTEM TYPE (B910)", INCLUDES BUT IS NOT LIMITED TO 4" DIAMETER PERFORATED AND NON–PERFORATED PIPE, ELBOWS, END CAPS, COUPLINGS, SLEEVES AND PRECAST CONCRETE HEADWALLS.~~

ALL PIPE TO COMPLY WITH SPEC. 3245.

WRAP PERFORATED PIPE WITH GEOTEXTILE PER SPEC. 3733, TYPE 1. ATTACH TO PIPE PER SPEC. 2502.

(1) AT CONTRACTORS OPTION, MAY TIE APPROACH PANEL DRAINAGE SYSTEM AND ABUTMENT DRAINAGE SYSTEM INTO A SINGLE PRECAST CONCRETE HEADWALL OR INTO A CATCH BASIN AS LONG AS A MINIMUM OF 1% POSITIVE SLOPE CAN BE MANTAINED.

INSTALL SALVAGED PRECAST CONCRETE HEADWALL WITH RODENT SCREEN. SEE STANDARD PLATE 3131 FOR DETAILS.

(2) 1/8" PER FT. MINIMUM SLOPE.

(3) MATERIAL SHALL COMPLY WITH Mn/DOT SPEC. 3149.2B SELECT GRANULAR BORROW, MODIFIED SO THAT NO MORE THAN 10% PASSES A NO. 200 SIEVE. (UNDER GRADING PORTION OF CONTRACT)

(4) REMOVE EXISTING 4" NON–PERFORATED PIPE TO 1'–0" FROM FACE OF EXISTING WINGWALL. SALVAGE EXISTING CONCRETE HEADWALL WITH RODENT SCREEN FOR REINSTALLATION.

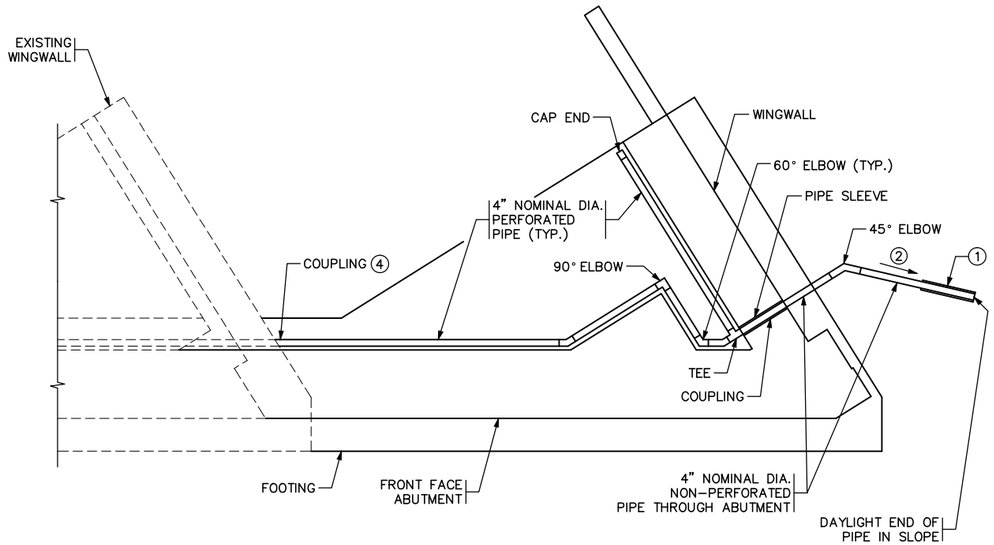

SECTION A–A

SHEET MODIFICATION:
(A) DENOTES MODIFICATION TO STANDARD SHEET

APPROVED: JANUARY 13, 2015	STATE OF MINNESOTA DEPARTMENT OF TRANSPORTATION	REVISED	DETAIL NO.
STATE BRIDGE ENGINEER	DRAINAGE SYSTEM		B910 MOD.

DRAFT-WORK IN PROCESS

NO.	DATE	BY	CHECK	DESIGN	REVISION / SUBMITTAL

DESIGNED BY: KAE CHECKED BY: MDJ
DRAWN BY: LMT CHECKED BY: MDJ

AECOM Kimley»Horn

90% SUBMISSION - 01/22/16

METROPOLITAN COUNCIL

SOUTHWEST Green Line LRT Extension

CIVIL - VOLUME 4F
TH 100 FREIGHT BRIDGE
BRIDGE 27W34
BRIDGE DETAILS

DISCIPLINE: STRUCTURES
SHEET NAME: CBR27W34-BRG-DTL-001-2

SHEET 54 OF 68

Dec, 11 2015 11:26 am V:\3400_ADC\CAD\SEGMENT E2\PLAN SHEETS\STRUCTURES\T100-FRT\CBR27W34-BRG-DTL-001.dwg By: Katie.Ellis

CONCRETE WEARING COURSE

☐ LOW SLUMP

☐ OTHER _____
TYPE OR MANUFACTURER

EXPANSION JOINTS

JOINT MANUFACTURER

MANUFACTURER'S IDENTIFICATION _____
MFR'S No. AND/OR LETTER DESIGNATION FOR JOINT USED

GLAND MANUFACTURER _____
NAME AND ADDRESS (CITY, STATE)

SIZE OF GLAND _____

MANUFACTURER'S IDENTIFICATION _____
MFR'S No. AND/OR LETTER DESIGNATION FOR GLAND USED

ELASTOMERIC BEARING PADS

PAD MANUFACTURER _____
NAME AND ADDRESS (CITY, STATE)

SPECIAL SURFACE FINISH

SYSTEM: _____ COLOR: _____

FINISHING ROADWAY FACES OF BARRIER RAILING

TYPE: _____ COLOR: _____

ANTI–GRAFFITI COATING

MANUFACTURER _____
NAME AND ADDRESS (CITY, STATE)

PRODUCT NAME: _____ LOCATION: _____

PAINT SYSTEM

Mn/DOT SPECIFICATION NUMBER _____
2478 OR 2479 OR OTHER

MANUFACTURER _____
NAME AND ADDRESS (CITY, STATE)

PRIME COAT _____
Mn/DOT MATERIAL SPECIFICATION NUMBER

INTERMEDIATE COAT _____
Mn/DOT MATERIAL SPECIFICATION NUMBER

FINISH COAT _____ _____
Mn/DOT MATERIAL SPECIFICATION NUMBER COLOR

PLAN QUALITY

RATE 1 (AGREE), 2 (NEUTRAL), OR 3 (DISAGREE, PLEASE COMMENT BELOW)

DIMENSIONING AND DETAILING ADEQUATELY DESCRIBED REQUIRED CONSTRUCTION. _____
BAR LISTS AND QUANTITIES WERE TYPICALLY COMPLETE AND FREE OF ERRORS. _____
SCALE OF DRAWINGS AND OVERALL LEGIBILITY OF LINES AND TEXT WAS GOOD. _____
(SB) SPECIAL PROVISIONS ADEQUATELY DESCRIBED SPECIAL WORK AND PAYMENT. _____

COMMENTS: _____

NUMBER OF BRIDGE
SUPPLEMENTAL AGREEMENTS: _____ COST: $ _____

LIST SIGNIFICANT ERRORS OR OMISSIONS IN PLAN DETAILS OR PAY QUANTITIES IN THE SPACE PROVIDED AT RIGHT.

BRIDGE REMOVAL / BRIDGE OPENING

NUMBER OF AND DATE OLD BRIDGE WAS REMOVED (IF APPLICABLE):

BRIDGE NUMBER _____ DATE REMOVED _____

DATE NEW BRIDGE WAS OPENED TO TRAFFIC _____

NOTIFY THE BRIDGE OFFICE BRIDGE MANAGEMENT UNIT WITH THIS INFORMATION AS SOON AS POSSIBLE. (651) 366–4557

OTHER ITEMS ①

① UTILITIES ADDED DURING CONSTRUCTION AND SPECIALTY ITEMS.

FINAL QUANTITIES ENTERED ON SCHEDULE OF QUANTITIES: YES ☐ NO ☐

SUMMARY OF SIGNIFICANT AS–BUILT CHANGES

THE AS–BUILT INFORMATION WAS ADDED TO THE PLAN BY:

_____ _____
INSPECTOR(S) SIGNATURE DATE

CHECKED BY: _____ _____
PROJECT ENGINEER/SUPERVISOR SIGNATURE DATE

AT THE TIME OF THE FINAL, THIS COMPLETED AS–BUILT BRIDGE DATA SHEET MUST BE SUBMITTED TO THE BRIDGE OFFICE – ATTN: REGIONAL CONSTRUCTION ENGINEER (MS610).

REVISION: 10–28–2008

APPROVED: SEPTEMBER 26, 2003
Daniel A. Hagen
STATE BRIDGE ENGINEER

AS–BUILT DETAILS
(AS NEEDED)

DRAFT-WORK IN PROCESS

FIG. 5–397.900

TITLE:	DES:	DR:	APPROVED:	BRIDGE NO.
AS–BUILT BRIDGE DATA	CHK:	CHK:		27W34
	SHEET NO. 55 OF 68 SHEETS			

Dec, 15 2015 06:44 am V:\3400_ADC\CAD\SEGMENT E2\PLAN SHEETS\STRUCTURES\T100-FRT\CBR27W34-BRG-DTL-002.dwg By: Katie.Ellis

CONTRACTED PROFILE

SCALE HOR: 0 50'

SCALE VER: 0 10'

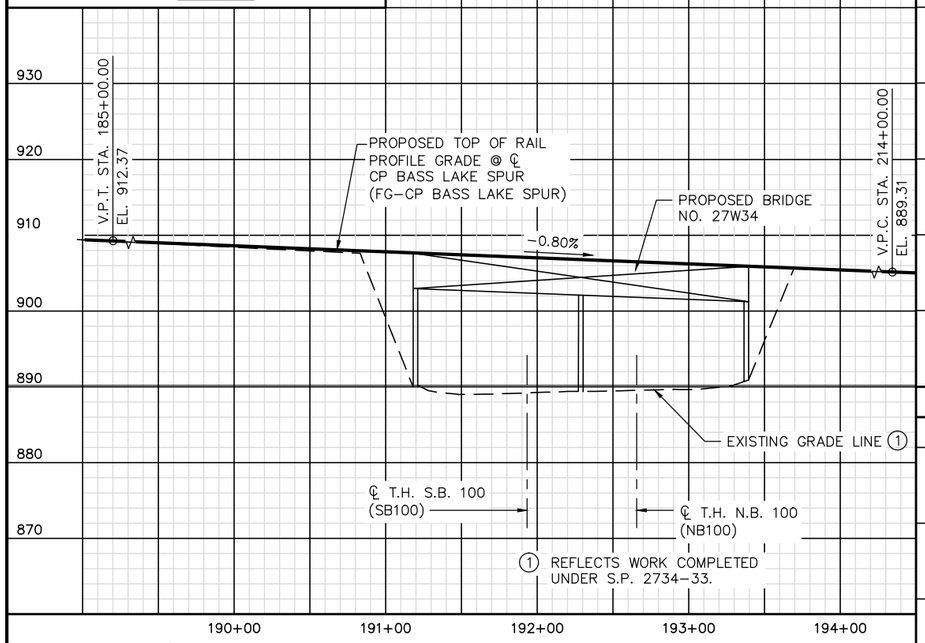

PROFILE GRADE TOP OF RAIL @ ℄ CP BASS LAKE SPUR (FG–CP BASS LAKE SPUR)

PLAT

SCALE: 0 50'

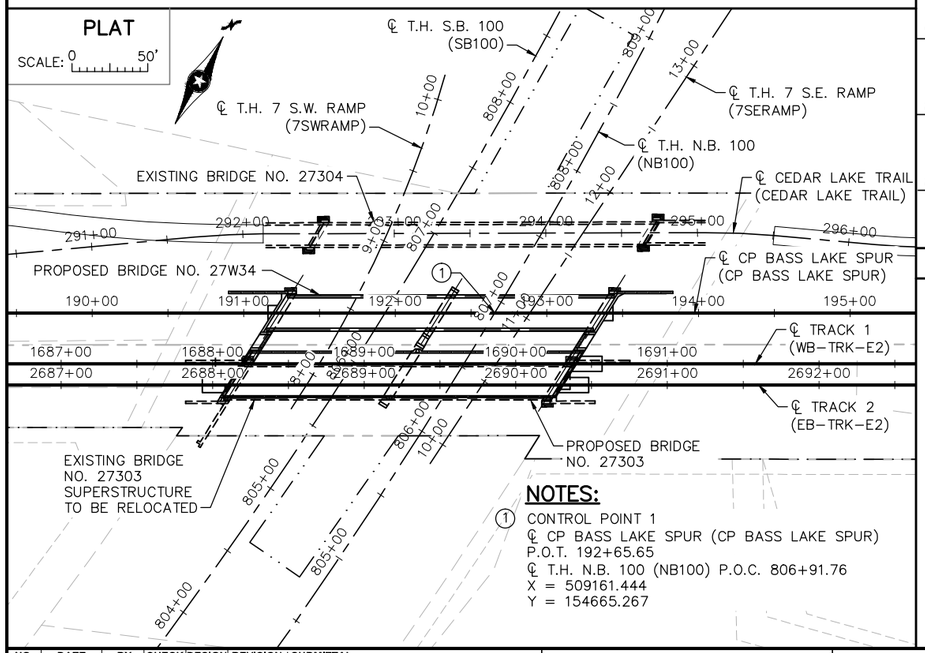

NOTES:

① CONTROL POINT 1
℄ CP BASS LAKE SPUR (CP BASS LAKE SPUR)
P.O.T. 192+65.65
℄ T.H. N.B. 100 (NB100) P.O.C. 806+91.76
X = 509161.444
Y = 154665.267

PROFILE GRADE 24' LT. OF ℄ T.H. N.B. 100 (PNB100L24)

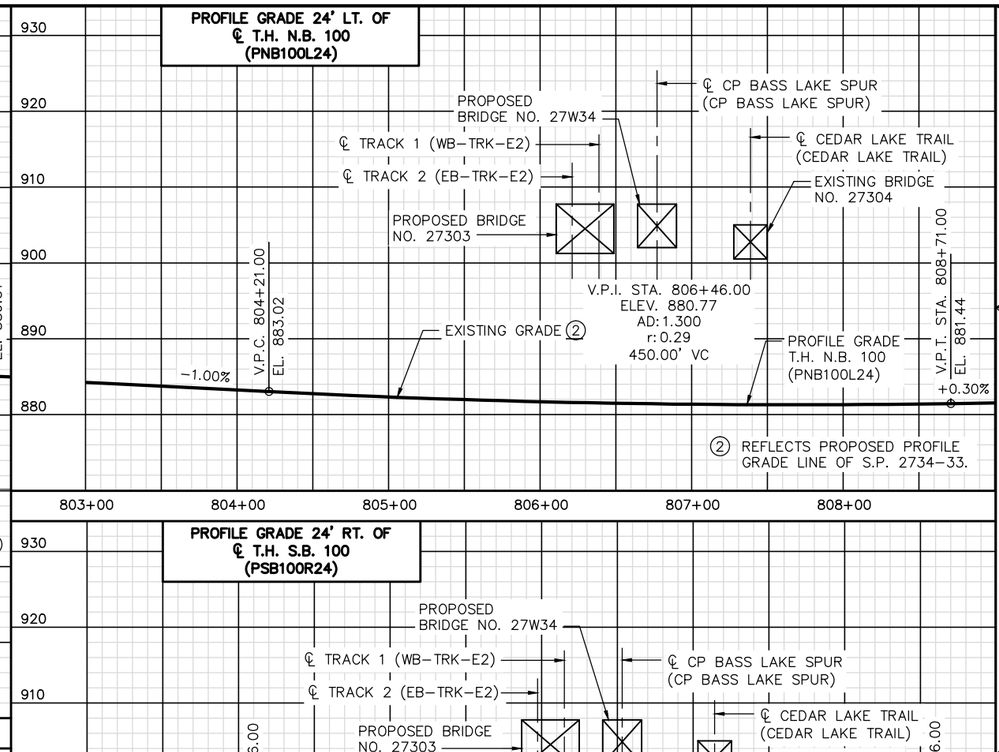

PROFILE GRADE 24' RT. OF ℄ T.H. S.B. 100 (PSB100R24)

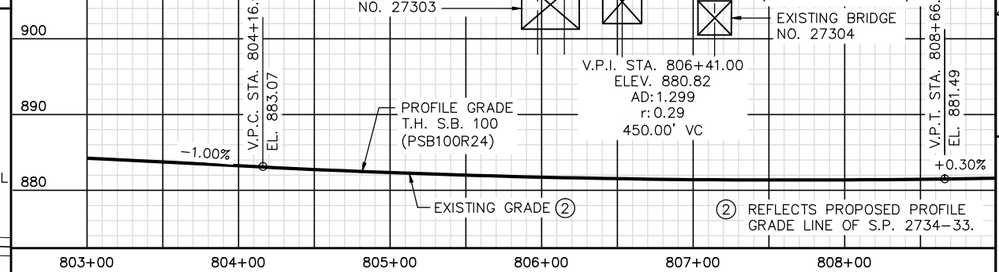

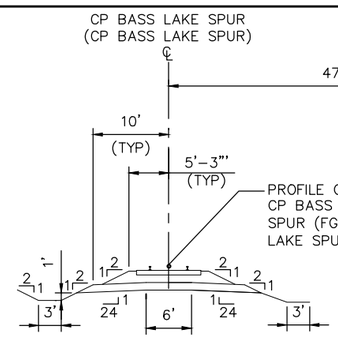

TYPICAL RAIL APPROACH SECTION T.H. 100 RAIL

INDEX MAP
(PARTS OF SIX SECTIONS)

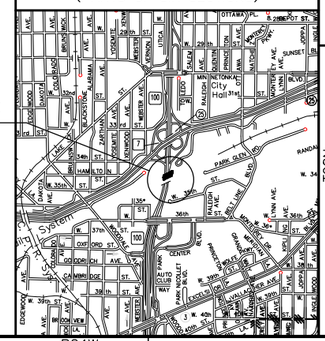

LOCATION ENGINEER'S OBSERVATIONS AT BRIDGE SITE

1. SPECIAL FEATURES: WATERFALLS, DAMS, FLOODS, ICE, DEBRIS SLIDING BANKS, RECREATIONAL BOATING.
2. OTHER BRIDGES OR CULVERTS OVER THE SAME STREAM (PARTICULARY STRUCTURES WHICH CARRY HIGH WATER WITHOUT OVERFLOW OF ROADWAY): GIVEN LOCATION, TYPE, LENGTH, HEIGHT ABOVE HIGH WATER, CROSS–SECTIONAL AREA ETC.
3. APPARENT HIGHWATER ELEVATION OBTAINED FROM:
4. OTHER DATA: APPROX. VELOCITY OF WATER AT TIME OF SURVEY.

HYDRAULIC ENGINEER'S RECOMMENDATION

DATE:

STREAM OR DITCH DESIGNATION

DRAINAGE AREA

MAX FLOOD ON RECORD

DESIGN FLOOD (YR. FREQ.): C.F.S.
HEADWATER ELEVATION: FT.
DESIGN MEAN VELOCITY THROUGH STRUCTURE F.P.S.
TOTAL STAGE INCREASE FT.
LOW MEMBER AT OR ABOVE ELEVATION FT.

WATERWAY AREA REQUIRED BELOW ELEV. = SQ. FT.
AT RIGHT ANGLES TO CHANNEL

BASIC FLOOD (100 YR. FREQ.) C.F.S.
HEADWATER ELEVATION: FT.
TOTAL STAGE INCREASE FT.
MEAN VELOCITY THROUGH STRUCTURE

FLOWLINE ELEVATION: FT. SKEW ANGLE:

ESTIMATED PRLIMINARY TOTAL SCOUR AT PIER EL.
(500 OR OT YR. FREQ.)

SCOUR CONFIRMATION RECOMMENDATION

DATE:

TOTAL SCOUR AT PIER EL. (500 OR OT YR. FREQ.)
SCOUR CODE: OBTAIN FROM HYDRAULIC ENGINEER

BRIDGE SURVEY SHEETS MADE FROM 2014 SAMBATEK SURVEYS AND PROPOSED PLANS FOR S.P. 2734–33

1ST BENCH MARK (NAVD 88)
BENCHMARK ID PT. 61
ELEVATION = 914.44
X = 507459.25, Y = 153987.80
DESCRIPTION = TOP NUT HYDRANT

2ND BENCH MARK (NAVD 88)
BENCHMARK ID PT. 63
ELEVATION = 888.82
X = 511126.66, Y = 155735.94
DESCRIPTION = MAG NAIL IN BIT. ISLAND

BRIDGE SURVEY

PROPOSED BRIDGE LOCATED:
0.2 MILES SOUTH OF JCT. T.H. 7
IN ST. LOUIS PARK

SEC 6 T 28N R 24W

CITY OF ST LOUIS PARK HENNEPIN COUNTY

BRIDGE NO. 27W34

DRAFT-WORK IN PROCESS

NO.	DATE	BY	CHECK	DESIGN	REVISION / SUBMITTAL

DESIGNED BY: KAE CHECKED BY: MDJ
DRAWN BY: LMT CHECKED BY: MDJ

AECOM Kimley»Horn

90% SUBMISSION - 01/22/16

METROPOLITAN COUNCIL

SOUTHWEST Green Line LRT Extension

CIVIL - VOLUME 4F
TH 100 FREIGHT RAIL BRIDGE
BRIDGE 27W34
BRIDGE SURVEY

DISCIPLINE: STRUCTURES

SHEET NAME: CBR27W34-BRG-SUR-001

SHEET 56 OF 68

Dec, 11 2015 11:28 am V:\3400_ADC\CAD\SEGMENT E2\PLAN SHEETS\STRUCTURES\T100-FRT\CBR27W34-BRG-SUR-001.dwg By: Katie.Ellis

℄ T.H. 7 S.W. RAMP
(7SWRAMP)

℄ T.H. 7 S.E. RAMP
(7SERAMP)

℄ CEDAR LAKE TRAIL
(CEDAR LAKE TRAIL)

℄ T.H. S.B. 100
(SB100)

℄ T.H. N.B. 100
(NB100)

℄ BRG. W. ABUT.

℄ PIER

℄ BRG. E. ABUT.

℄ CP BASS LAKE SPUR
(CP BASS LAKE SPUR)

℄ TRACK 1
(WB–TRK–E2)

℄ TRACK 2
(EB–TRK–E2)

CB–01
STA. 191+12.93
19' RT. OF ℄ CP
BASS LAKE SPUR

B–03
STA. 192+33.63
15' RT. OF ℄ CP
BASS LAKE SPUR

B–04
STA. 193+17.91
27' RT. OF ℄ CP
BASS LAKE SPUR

B–01
STA. 190+92.15
60' RT. OF ℄ CP
BASS LAKE SPUR

B–02
STA. 191+71.59
103' RT. OF ℄ CP
BASS LAKE SPUR

CB–02A
STA. 193+01.17
69' RT. OF ℄ CP
BASS LAKE SPUR

NOTES:

THE SUBSURFACE UTILITY INFORMATION IN THIS PLAN IS UTILITY QUALITY LEVEL D. THIS UTILITY QUALITY LEVEL WAS DETERMINED ACCORDING TO THE GUIDELINES OF CI/ASCE 38–02, ENTITLED "STANDARD GUIDELINES FOR THE COLLECTION AND DEPICTION OF EXISTING SUBSURFACE UTILITY DATA."

DRAFT-WORK IN PROCESS

NO.	DATE	BY	CHECK	DESIGN	REVISION / SUBMITTAL

DESIGNED BY: KAE | CHECKED BY: MDJ
DRAWN BY: LMT | CHECKED BY: MDJ

AECOM Kimley»Horn

90% SUBMISSION - 01/22/16

METROPOLITAN COUNCIL

SOUTHWEST Green Line LRT Extension

CIVIL - VOLUME 4F
TH 100 FREIGHT RAIL BRIDGE
BRIDGE 27W34
BRIDGE SURVEY PLAN

DISCIPLINE: STRUCTURES

SHEET NAME: CBR27W34-BRG-BOR-001-1

SHEET 57 OF 68

Dec, 11 2015 11:29 am V:\3400_ADC\CAD\SEGMENT E2\PLAN SHEETS\STRUCTURES\T100-FRT\CBR27W34-BRG-BOR-001.dwg By: Katie.Ellis

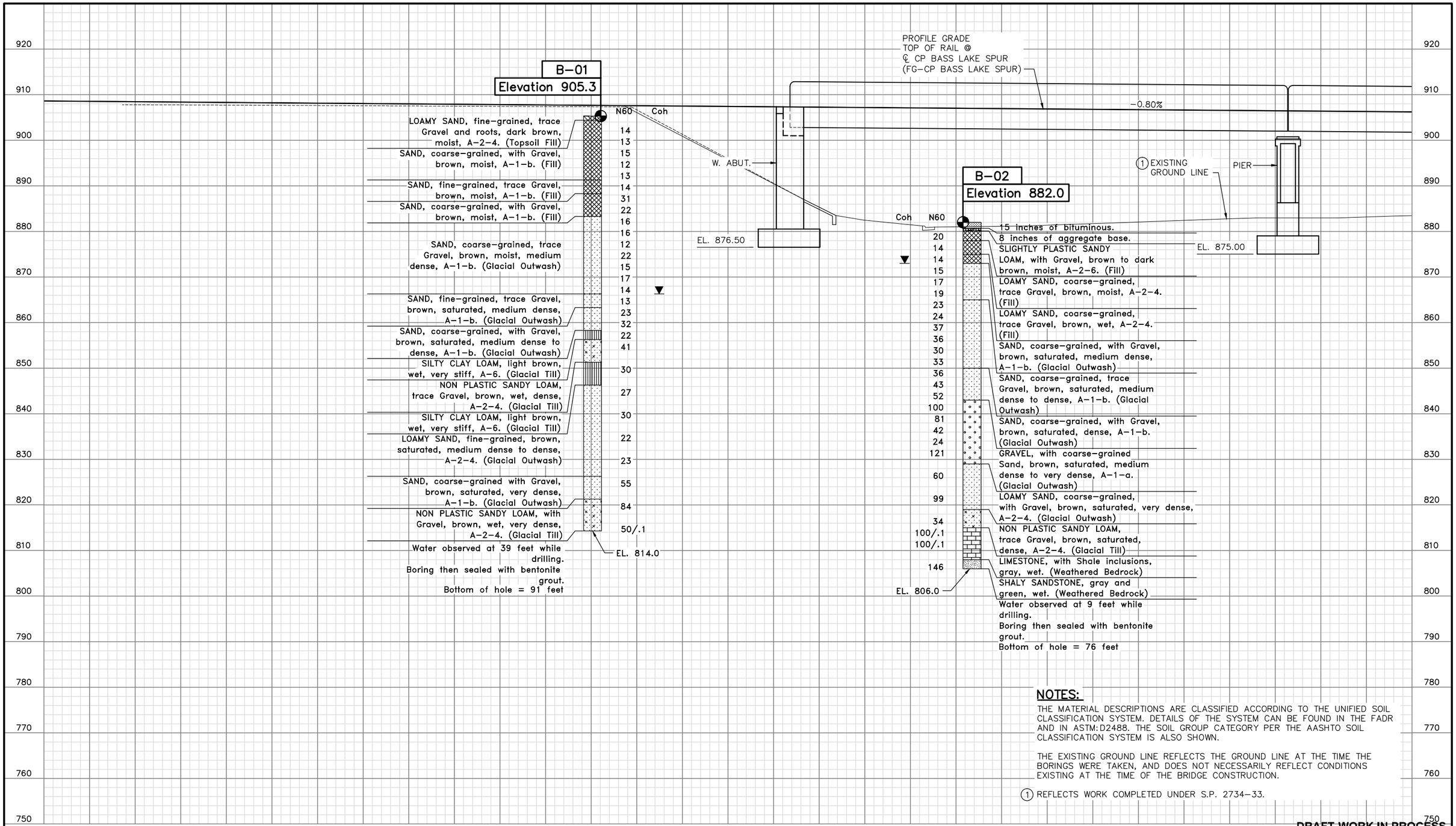

NOTES:

THE MATERIAL DESCRIPTIONS ARE CLASSIFIED ACCORDING TO THE UNIFIED SOIL CLASSIFICATION SYSTEM. DETAILS OF THE SYSTEM CAN BE FOUND IN THE FADR AND IN ASTM:D2488. THE SOIL GROUP CATEGORY PER THE AASHTO SOIL CLASSIFICATION SYSTEM IS ALSO SHOWN.

THE EXISTING GROUND LINE REFLECTS THE GROUND LINE AT THE TIME THE BORINGS WERE TAKEN, AND DOES NOT NECESSARILY REFLECT CONDITIONS EXISTING AT THE TIME OF THE BRIDGE CONSTRUCTION.

(1) REFLECTS WORK COMPLETED UNDER S.P. 2734-33.

DRAFT-WORK IN PROCESS

NO.	DATE	BY	CHECK	DESIGN	REVISION / SUBMITTAL

DESIGNED BY: KAE | CHECKED BY: MDJ
DRAWN BY: LMT | CHECKED BY: MDJ

AECOM Kimley»Horn

90% SUBMISSION - 01/22/16

METROPOLITAN COUNCIL

SOUTHWEST Green Line LRT Extension

CIVIL - VOLUME 4F
TH 100 FREIGHT BRIDGE
BRIDGE 27W34
BRIDGE SURVEY PROFILE 1

DISCIPLINE: STRUCTURES

SHEET NAME: CBR27W34-BRG-BOR-002-1

SHEET 58 OF 68

Dec, 11 2015 11:29 am V:\3400_ADC\CAD\SEGMENT E2\PLAN SHEETS\STRUCTURES\T100-FRT\CBR27W34-BRG-BOR-002.dwg By: Katie.Ellis

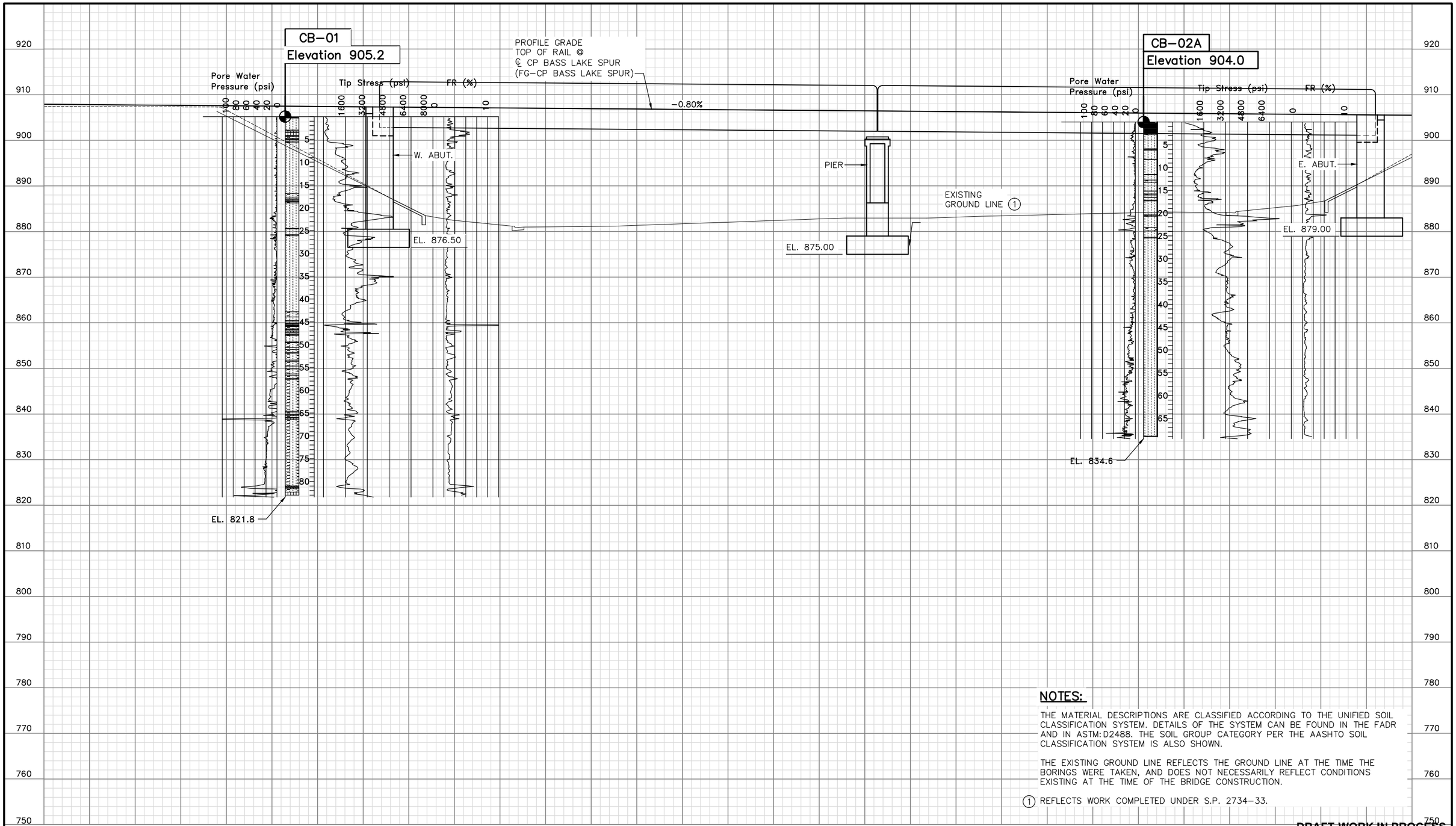

NOTES:

THE MATERIAL DESCRIPTIONS ARE CLASSIFIED ACCORDING TO THE UNIFIED SOIL CLASSIFICATION SYSTEM. DETAILS OF THE SYSTEM CAN BE FOUND IN THE FADR AND IN ASTM: D2488. THE SOIL GROUP CATEGORY PER THE AASHTO SOIL CLASSIFICATION SYSTEM IS ALSO SHOWN.

THE EXISTING GROUND LINE REFLECTS THE GROUND LINE AT THE TIME THE BORINGS WERE TAKEN, AND DOES NOT NECESSARILY REFLECT CONDITIONS EXISTING AT THE TIME OF THE BRIDGE CONSTRUCTION.

(1) REFLECTS WORK COMPLETED UNDER S.P. 2734–33.

DRAFT-WORK IN PROCESS

NO.	DATE	BY	CHECK	DESIGN	REVISION / SUBMITTAL

DESIGNED BY: KAE | CHECKED BY: MDJ
DRAWN BY: LMT | CHECKED BY: MDJ

AECOM Kimley»Horn

90% SUBMISSION - 01/22/16

METROPOLITAN COUNCIL

SOUTHWEST Green Line LRT Extension

CIVIL - VOLUME 4F
TH 100 FREIGHT RAIL BRIDGE
BRIDGE 27W34
BRIDGE SURVEY PROFILE 2

DISCIPLINE: STRUCTURES
SHEET NAME: CBR27W34-BRG-BOR-002-2

SHEET 59 OF 68

Dec, 11 2015 04:01 pm V:\3400_ADC\CAD\SEGMENT E2\PLAN SHEETS\STRUCTURES\T100-FRT\CBR27W34-BRG-BOR-002.dwg By: Katie.Ellis

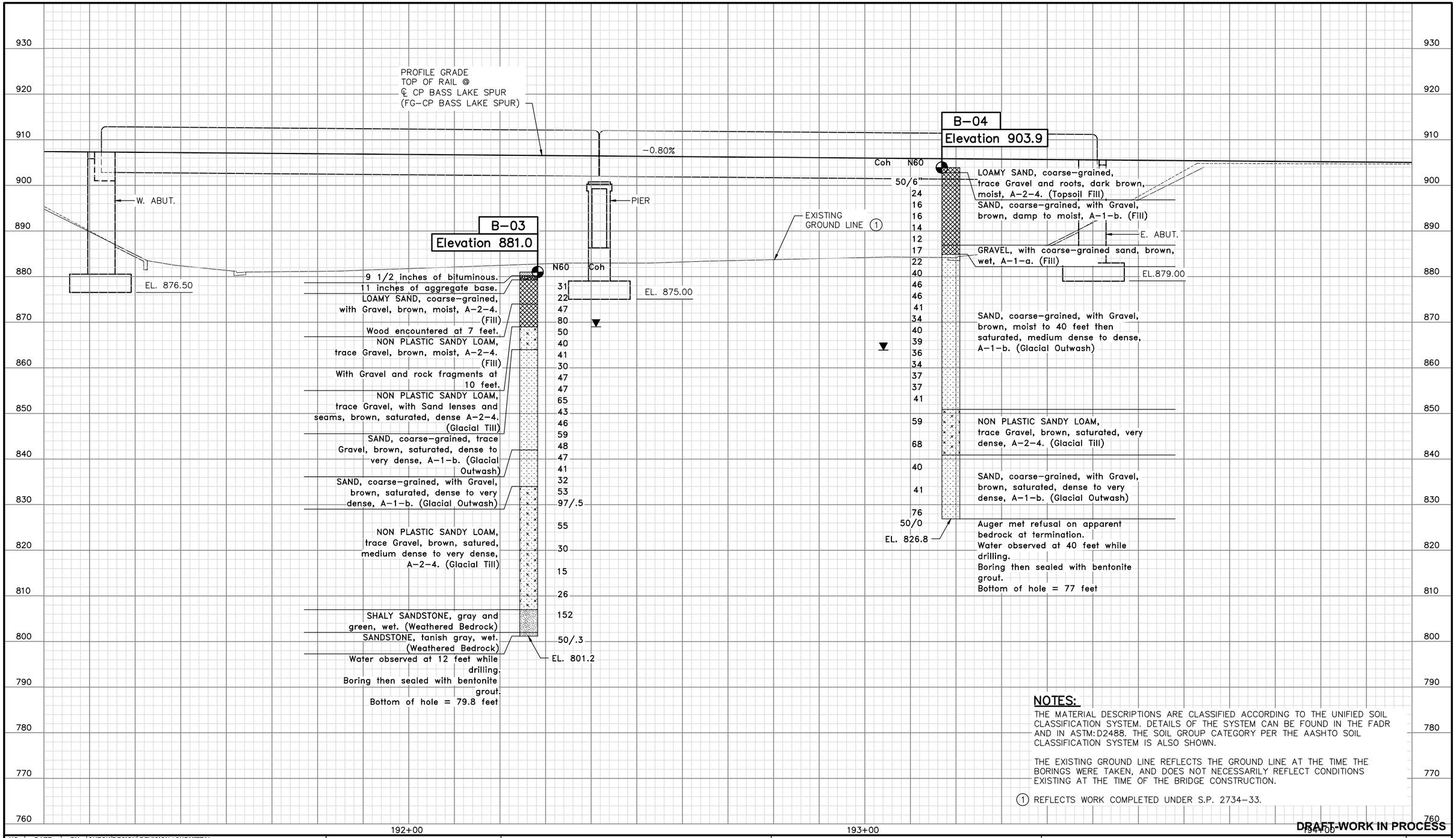

NOTES:

THE MATERIAL DESCRIPTIONS ARE CLASSIFIED ACCORDING TO THE UNIFIED SOIL CLASSIFICATION SYSTEM. DETAILS OF THE SYSTEM CAN BE FOUND IN THE FADR AND IN ASTM:D2488. THE SOIL GROUP CATEGORY PER THE AASHTO SOIL CLASSIFICATION SYSTEM IS ALSO SHOWN.

THE EXISTING GROUND LINE REFLECTS THE GROUND LINE AT THE TIME THE BORINGS WERE TAKEN, AND DOES NOT NECESSARILY REFLECT CONDITIONS EXISTING AT THE TIME OF THE BRIDGE CONSTRUCTION.

(1) REFLECTS WORK COMPLETED UNDER S.P. 2734-33.

DRAFT-WORK IN PROCESS

NO.	DATE	BY	CHECK	DESIGN	REVISION / SUBMITTAL

DESIGNED BY: KAE CHECKED BY: MDJ
DRAWN BY: LMT CHECKED BY: MDJ

AECOM Kimley»Horn

90% SUBMISSION - 01/22/16

METROPOLITAN COUNCIL

SOUTHWEST Green Line LRT Extension

CIVIL - VOLUME 4F
TH 100 FREIGHT RAIL BRIDGE
BRIDGE 27W34
BRIDGE SURVEY PROFILE 3

DISCIPLINE: STRUCTURES
SHEET NAME: CBR27W34-BRG-BOR-002-3

SHEET 60 OF 68

Dec, 11 2015 11:30 am V:\3400_ADC\CAD\SEGMENT E2\PLAN SHEETS\STRUCTURES\T100-FRT\CBR27W34-BRG-BOR-002.dwg By: Katie.Ellis

STAGE 1A TRAFFIC

1. T.H. 100 TO REMAIN OPEN TO TRAFFIC.
2. CP RAIL OPERATIONS ON EXISTING BRIDGE NO. 27303.

STAGE 1A CONSTRUCTION

1. CONSTRUCT & BACKFILL BRIDGE NO. 27W34 ABUTMENTS AND INFILL WALL.
2. CONSTRUCT CP RAIL BASS LAKE SPUR.

℄ T.H. S.B. 100 (SB100)

℄ T.H. N.B. 100 (NB100)

ROW

℄ CEDAR LAKE TRAIL (CEDAR LAKE TRAIL)

EXISTING BRIDGE NO. 27304

292+00 293+00 294+00 295+00

807+00 808+00

TEMPORARY BARRIERS PLACED BEHIND CURB (TYP.)

BRIDGE NO. 27W34 W. ABUTMENT

BRIDGE NO. 27W34 E. ABUTMENT

℄ CP BASS LAKE SPUR (CP BASS LAKE SPUR)

191+00 192+00 193+00 194+00

807+00

BRIDGE NO. 27303 INFILL WALL

TEMPORARY SHORING

BRIDGE NO. 27303 INFILL WALL

TEMPORARY SHORING

℄ EXISTING CP MAINLINE (MAINLINE)

806+00

29+00 30+00 31+00 32+00

EXISTING BRIDGE NO. 27303 W. ABUTMENT AND WINGWALL

EXISTING BRIDGE NO. 27303 E. ABUTMENT AND WINGWALL

EXISTING BRIDGE NO. 27303 SUPERSTRUCTURE

806+00

805+00

EXISTING ON-RAMP

12' EXISTING THRU LANE

12' EXISTING THRU LANE

12' EXISTING THRU LANE

12' EXISTING THRU LANE

12' EXISTING THRU LANE

12' EXISTING THRU LANE

EXISTING OFF RAMP

NOTE:

CONTRACTOR TO REMAIN IN EXISTING ROW.

DRAFT-WORK IN PROCESS

NO.	DATE	BY	CHECK	DESIGN	REVISION / SUBMITTAL

DESIGNED BY: KAE CHECKED BY: MDJ

DRAWN BY: LMT CHECKED BY: MDJ

AECOM Kimley»Horn

90% SUBMISSION - 01/22/16

METROPOLITAN COUNCIL

SOUTHWEST Green Line LRT Extension

CIVIL - VOLUME 4F
TH 100 FREIGHT RAIL BRIDGE
BRIDGE 27W34
STAGING PLAN 1

DISCIPLINE: STRUCTURES

SHEET NAME: CBR27W34-BRG-STG-001-1

SHEET 61 OF 68

Dec, 11 2015 11:31 am V:\3400_ADC\CAD\SEGMENT E2\PLAN SHEETS\STRUCTURES\T100-FRT\CBR27W34-BRG-STG-001.dwg By: Katie.Ellis

STAGE 1B TRAFFIC

1. T.H. 100 INSIDE LANE TEMPORARY CLOSURE.
2. CP RAIL OPERATIONS ON EXISTING BRIDGE NO. 27303.

STAGE 1B CONSTRUCTION

1. CONSTRUCT REMAINING PORTIONS OF BRIDGE NO. 27W34 PIER.
2. CONSTRUCT CP RAIL BASS LAKE SPUR.

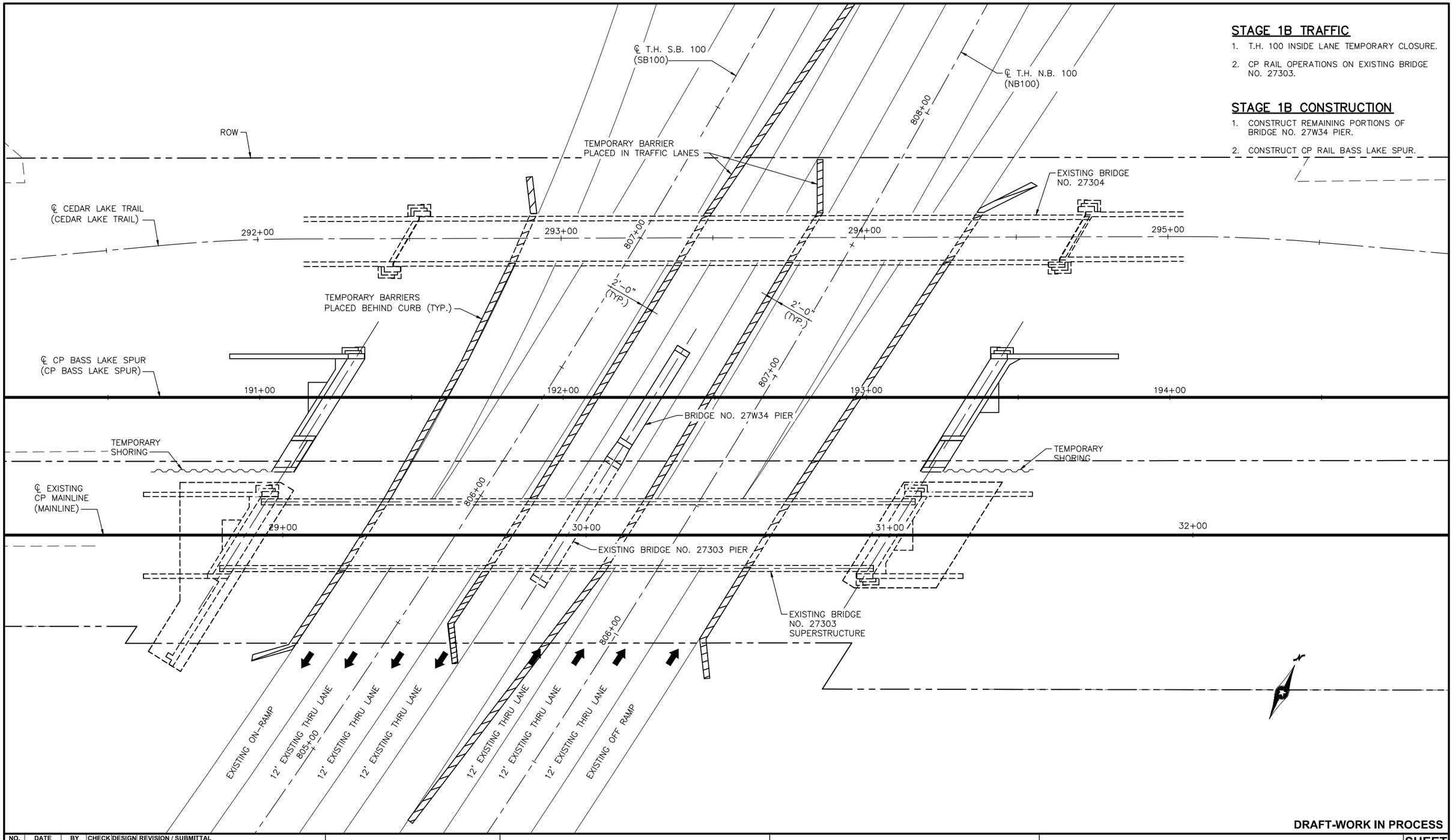

DRAFT-WORK IN PROCESS

NO.	DATE	BY	CHECK	DESIGN	REVISION / SUBMITTAL

DESIGNED BY: KAE CHECKED BY: MDJ
DRAWN BY: LMT CHECKED BY: MDJ

AECOM Kimley»Horn

90% SUBMISSION - 01/22/16

METROPOLITAN COUNCIL

SOUTHWEST Green Line LRT Extension

CIVIL - VOLUME 4F
TH 100 FREIGHT RAIL BRIDGE
BRIDGE 27W34
STAGING PLAN 2

DISCIPLINE: STRUCTURES
SHEET NAME: CBR27W34-BRG-STG-001-2

SHEET 62 OF 68

Dec, 11 2015 11:31 am V:\3400_ADC\CAD\SEGMENT E2\PLAN SHEETS\STRUCTURES\T100-FRT\CBR27W34-BRG-STG-001.dwg By: Katie.Ellis

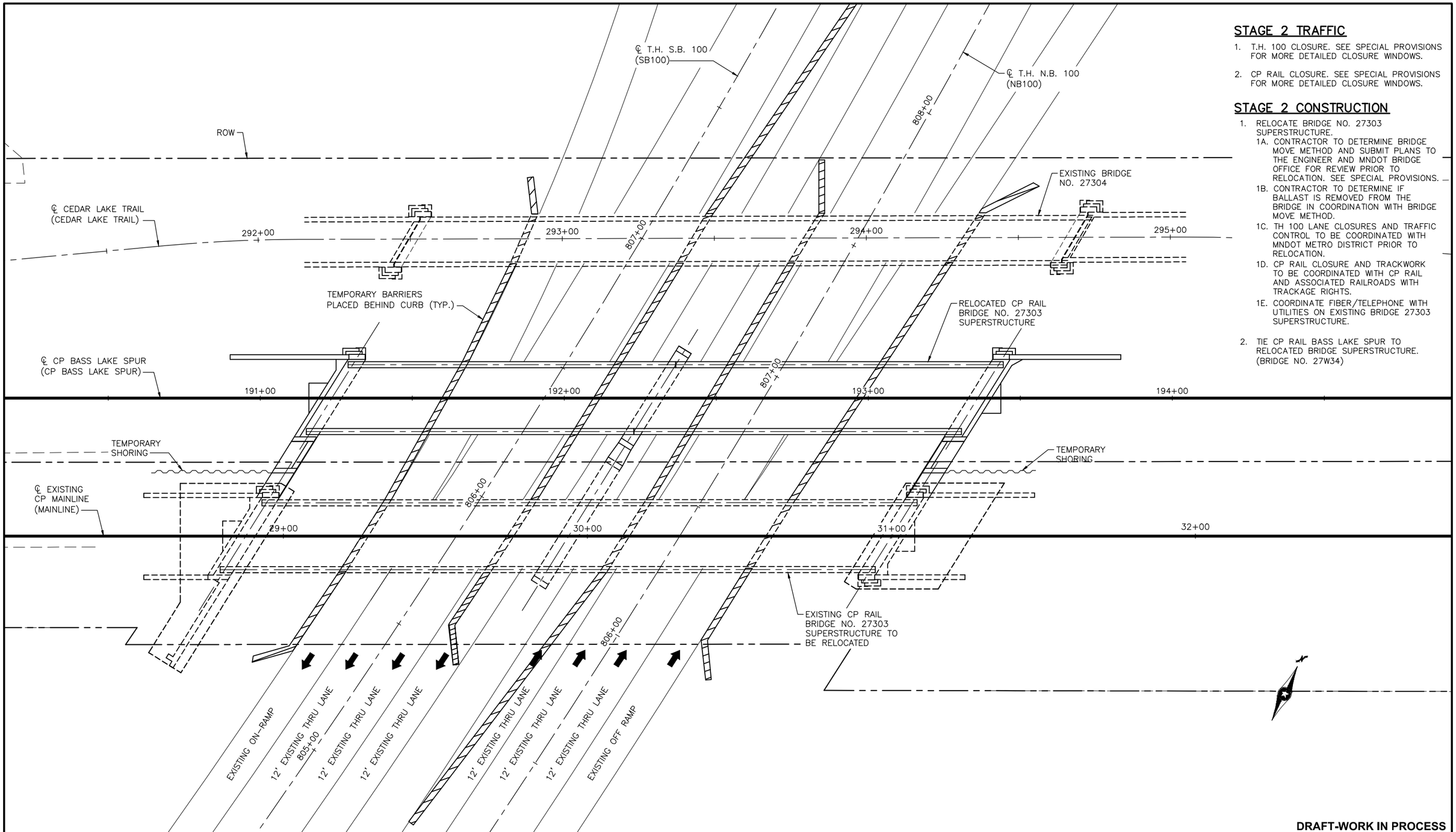

STAGE 2 TRAFFIC

1. T.H. 100 CLOSURE. SEE SPECIAL PROVISIONS FOR MORE DETAILED CLOSURE WINDOWS.
2. CP RAIL CLOSURE. SEE SPECIAL PROVISIONS FOR MORE DETAILED CLOSURE WINDOWS.

STAGE 2 CONSTRUCTION

1. RELOCATE BRIDGE NO. 27303 SUPERSTRUCTURE.
   - 1A. CONTRACTOR TO DETERMINE BRIDGE MOVE METHOD AND SUBMIT PLANS TO THE ENGINEER AND MNDOT BRIDGE OFFICE FOR REVIEW PRIOR TO RELOCATION. SEE SPECIAL PROVISIONS.
   - 1B. CONTRACTOR TO DETERMINE IF BALLAST IS REMOVED FROM THE BRIDGE IN COORDINATION WITH BRIDGE MOVE METHOD.
   - 1C. TH 100 LANE CLOSURES AND TRAFFIC CONTROL TO BE COORDINATED WITH MNDOT METRO DISTRICT PRIOR TO RELOCATION.
   - 1D. CP RAIL CLOSURE AND TRACKWORK TO BE COORDINATED WITH CP RAIL AND ASSOCIATED RAILROADS WITH TRACKAGE RIGHTS.
   - 1E. COORDINATE FIBER/TELEPHONE WITH UTILITIES ON EXISTING BRIDGE 27303 SUPERSTRUCTURE.
2. TIE CP RAIL BASS LAKE SPUR TO RELOCATED BRIDGE SUPERSTRUCTURE. (BRIDGE NO. 27W34)

DRAFT-WORK IN PROCESS

NO.	DATE	BY	CHECK	DESIGN	REVISION / SUBMITTAL

DESIGNED BY: KAE | CHECKED BY: MDJ
DRAWN BY: LMT | CHECKED BY: MDJ

AECOM Kimley»Horn

90% SUBMISSION - 01/22/16

METROPOLITAN COUNCIL

SOUTHWEST Green Line LRT Extension

CIVIL - VOLUME 4F
TH 100 FREIGHT RAIL BRIDGE
BRIDGE 27W34
STAGING PLAN 3

DISCIPLINE: STRUCTURES
SHEET NAME: CBR27W34-BRG-STG-001-3

SHEET 63 OF 68

Dec, 11 2015 11:31 am V:\3400_ADC\CAD\SEGMENT E2\PLAN SHEETS\STRUCTURES\T100-FRT\CBR27W34-BRG-STG-001.dwg By: Katie.Ellis

STAGE 3 TRAFFIC

1. T.H. 100 INSIDE LANE TEMPORARY CLOSURE.
2. CP RAIL OPERATIONS ON BRIDGE NO. 27W34.

STAGE 3 CONSTRUCTION

1. REMOVE PREVIOUS CP MAINLINE.
2. MODIFY BRIDGE NO. 27303 ABUTMENT AND PIER BEAM SEATS FOR LRT BRIDGE SUPERSTRUCTURE.

℄ T.H. S.B. 100 (SB100)

℄ T.H. N.B. 100 (NB100)

ROW

TEMPORARY BARRIERS PLACED IN TRAFFIC LANES

EXISTING BRIDGE NO. 27304

℄ CEDAR LAKE TRAIL (CEDAR LAKE TRAIL)

292+00 293+00 294+00 295+00

807+00

TEMPORARY BARRIERS PLACED BEHIND CURB (TYP.)

BRIDGE NO. 27W34

℄ CP BASS LAKE SPUR (CP BASS LAKE SPUR)

191+00 192+00 193+00 194+00

807+00

TEMPORARY SHORING

TEMPORARY SHORING

℄ TRACK 1 (WB–TRK–E2)

1688+00 1689+00 1690+00 1691+00 1692+00

806+00

BRIDGE NO. 27303 W. ABUTMENT

BRIDGE NO. 27303 PIER

2688+00 2689+00 2690+00 2691+00 2692+00

℄ TRACK 2 (EB–TRK–E2)

BRIDGE NO. 27303 E. ABUTMENT

806+00

EXISTING ON–RAMP

12' EXISTING THRU LANE

805+00

12' EXISTING THRU LANE

12' EXISTING THRU LANE

12' EXISTING THRU LANE

12' EXISTING THRU LANE

12' EXISTING THRU LANE

EXISTING OFF RAMP

DRAFT-WORK IN PROCESS

NO.	DATE	BY	CHECK	DESIGN	REVISION / SUBMITTAL

DESIGNED BY: KAE CHECKED BY: MDJ

DRAWN BY: LMT CHECKED BY: MDJ

AECOM Kimley»Horn

90% SUBMISSION - 01/22/16

METROPOLITAN COUNCIL

SOUTHWEST Green Line LRT Extension

CIVIL - VOLUME 4F
TH 100 FREIGHT RAIL BRIDGE
BRIDGE 27W34
STAGING PLAN 4

DISCIPLINE: STRUCTURES

SHEET NAME: CBR27W34-BRG-STG-001-4

SHEET 64 OF 68

Dec, 11 2015 11:31 am V:\3400_ADC\CAD\SEGMENT E2\PLAN SHEETS\STRUCTURES\T100-FRT\CBR27W34-BRG-STG-001.dwg By: Katie.Ellis

STAGE 4 TRAFFIC

1. T.H. 100 NIGHT OR WEEKEND CLOSURE.
2. CP RAIL OPERATIONS ON BRIDGE NO. 27W34.

STAGE 4 CONSTRUCTION

1. ERECT BRIDGE NO. 27303 BEAMS.

℄ T.H. S.B. 100 (SB100)

℄ T.H. N.B. 100 (NB100)

808+00

ROW

EXISTING BRIDGE NO. 27304

℄ CEDAR LAKE TRAIL (CEDAR LAKE TRAIL)

292+00 293+00 807+00 294+00 295+00

BRIDGE NO. 27W34

℄ CP BASS LAKE SPUR (CP BASS LAKE SPUR)

191+00 192+00 807+00 193+00 194+00

℄ TRACK 1 (WB–TRK–E2)

1688+00 806+00 1689+00 1690+00 1691+00 1692+00

2688+00 2689+00 2690+00 2691+00 2692+00

℄ TRACK 2 (EB–TRK–E2)

BRIDGE NO. 27303 BEAM (TYP.)

806+00

EXISTING ON–RAMP

12' EXISTING THRU LANE

805+00

12' EXISTING THRU LANE

12' EXISTING THRU LANE

12' EXISTING THRU LANE

12' EXISTING THRU LANE

12' EXISTING THRU LANE

12' EXISTING THRU LANE

EXISTING OFF RAMP

DRAFT-WORK IN PROCESS

NO.	DATE	BY	CHECK	DESIGN	REVISION / SUBMITTAL

DESIGNED BY: KAE CHECKED BY: MDJ

DRAWN BY: LMT CHECKED BY: MDJ

AECOM Kimley»Horn

90% SUBMISSION - 01/22/16

METROPOLITAN COUNCIL

SOUTHWEST Green Line LRT Extension

CIVIL - VOLUME 4F
TH 100 FREIGHT RAIL BRIDGE
BRIDGE 27W34
STAGING PLAN 5

DISCIPLINE: STRUCTURES

SHEET NAME: CBR27W34-BRG-STG-001-5

SHEET 65 OF 68

Dec, 11 2015 11:31 am V:\3400_ADC\CAD\SEGMENT E2\PLAN SHEETS\STRUCTURES\T100-FRT\CBR27W34-BRG-STG-001.dwg By: Katie.Ellis

STAGE 5 TRAFFIC

1. T.H. 100 LANES REOPENED; TEMPORARY LANE CLOSURES FOR CONSTRUCTION ACTIVITIES.
2. TEMPORARY CLOSURE OF T.H. 100 REQUIRED FOR CONCRETE PLACEMENT OVER ROADWAY.

STAGE 5 CONSTRUCTION

1. CONSTRUCT BRIDGE NO. 27303 SUPERSTRUCTURE.
2. BRIDGE NO. 27303 AND BRIDGE NO. 27W34 COMPLETED.

℄ T.H. S.B. 100 (SB100)

℄ T.H. N.B. 100 (NB100)

808+00

ROW

EXISTING BRIDGE NO. 27304

℄ CEDAR LAKE TRAIL (CEDAR LAKE TRAIL)

292+00 293+00 807+00 294+00 295+00

BRIDGE NO. 27W34

℄ CP BASS LAKE SPUR (CP BASS LAKE SPUR)

191+00 192+00 807+00 193+00 194+00

℄ TRACK 1 (WB–TRK–E2)

1688+00 806+00 1689+00 1690+00 1691+00 1692+00

2688+00 2689+00 2690+00 2691+00 2692+00

℄ TRACK 2 (EB–TRK–E2)

BRIDGE NO. 27303

806+00

EXISTING ON–RAMP

12' EXISTING THRU LANE

805+00

12' EXISTING THRU LANE

12' EXISTING THRU LANE

12' EXISTING THRU LANE

12' EXISTING THRU LANE

12' EXISTING THRU LANE

12' EXISTING THRU LANE

EXISTING OFF RAMP

DRAFT-WORK IN PROCESS

NO.	DATE	BY	CHECK	DESIGN	REVISION / SUBMITTAL

DESIGNED BY: KAE CHECKED BY: MDJ

DRAWN BY: LMT CHECKED BY: MDJ

AECOM Kimley»Horn

90% SUBMISSION - 01/22/16

METROPOLITAN COUNCIL

SOUTHWEST Green Line LRT Extension

CIVIL - VOLUME 4F
TH 100 FREIGHT RAIL BRIDGE
BRIDGE 27W34
STAGING PLAN 6

DISCIPLINE: STRUCTURES

SHEET NAME: CBR27W34-BRG-STG-001-6

SHEET 66 OF 68

Dec, 11 2015 11:31 am V:\3400_ADC\CAD\SEGMENT E2\PLAN SHEETS\STRUCTURES\T100-FRT\CBR27W34-BRG-STG-001.dwg By: Katie.Ellis

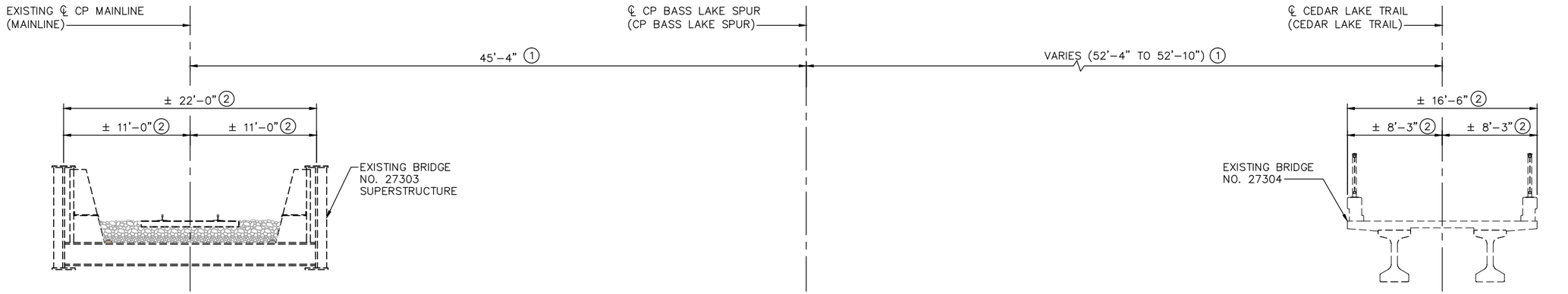

STAGE 1 CROSS SECTION

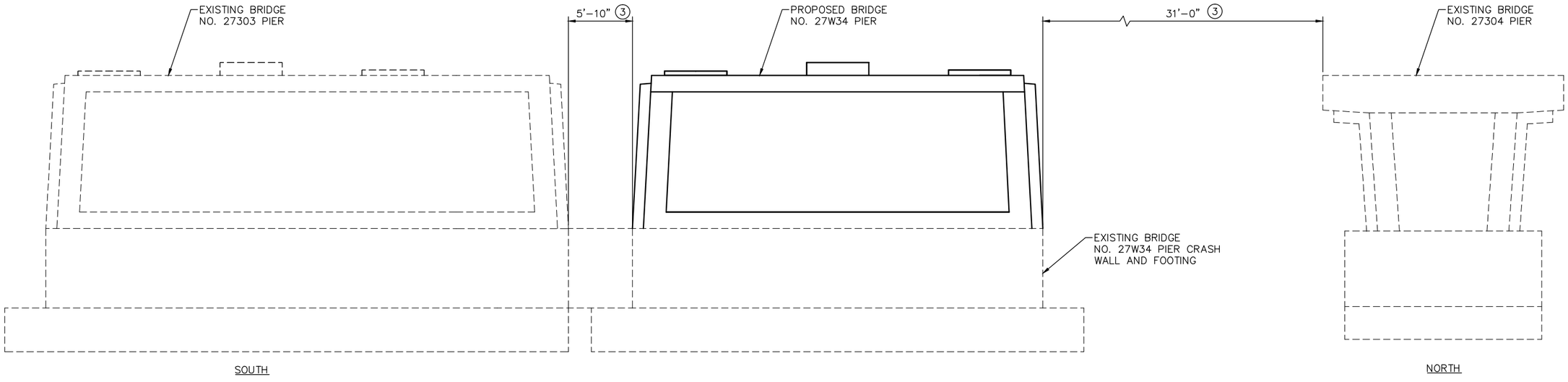

STAGE 1B CROSS SECTION

NOTES:

(1) DIMENSION MEASURED PERPENDICULAR TO ℄ CP BASS LAKE SPUR.

(2) DIMENSION MEASURED PERPENDICULAR TO SUPERSTRUCTURE ALIGNMENT.

(3) DIMENSION MEASURED ALONG MEDIAN T.H. 100.

DRAFT-WORK IN PROCESS

NO.	DATE	BY	CHECK	DESIGN	REVISION / SUBMITTAL

DESIGNED BY: KAE | CHECKED BY: MDJ
DRAWN BY: LMT | CHECKED BY: MDJ

AECOM Kimley»Horn

90% SUBMISSION - 01/22/16

METROPOLITAN COUNCIL

SOUTHWEST Green Line LRT Extension

CIVIL - VOLUME 4F
TH 100 FREIGHT RAIL BRIDGE
BRIDGE 27W34
STAGING PLAN 7

DISCIPLINE: STRUCTURES

SHEET NAME: CBR27W34-BRG-STG-001-7

SHEET 67 OF 68

Dec, 11 2015 11:31 am V:\3400_ADC\CAD\SEGMENT E2\PLAN SHEETS\STRUCTURES\T100-FRT\CBR27W34-BRG-STG-001.dwg By: Katie.Ellis

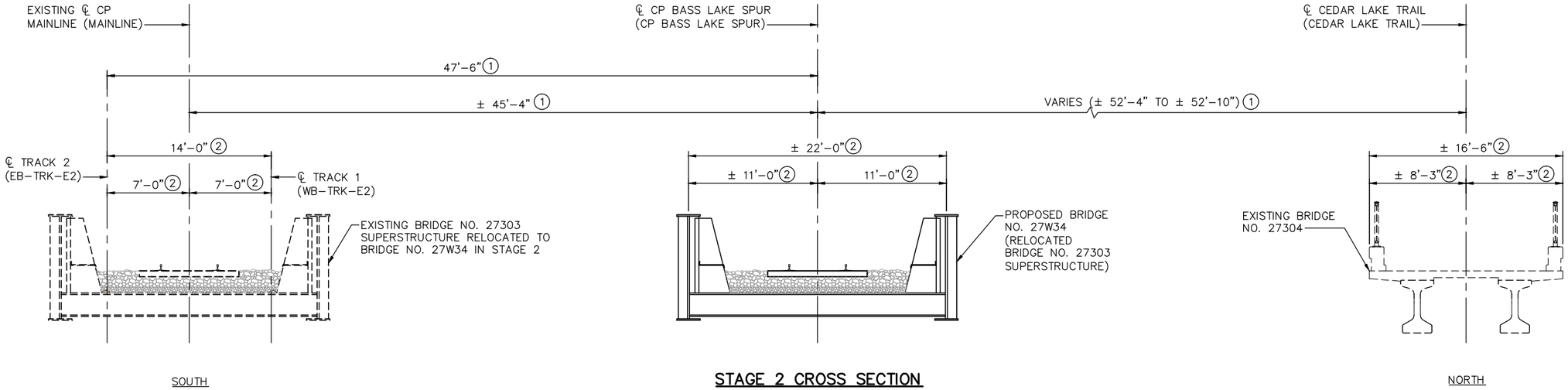

STAGE 2 CROSS SECTION

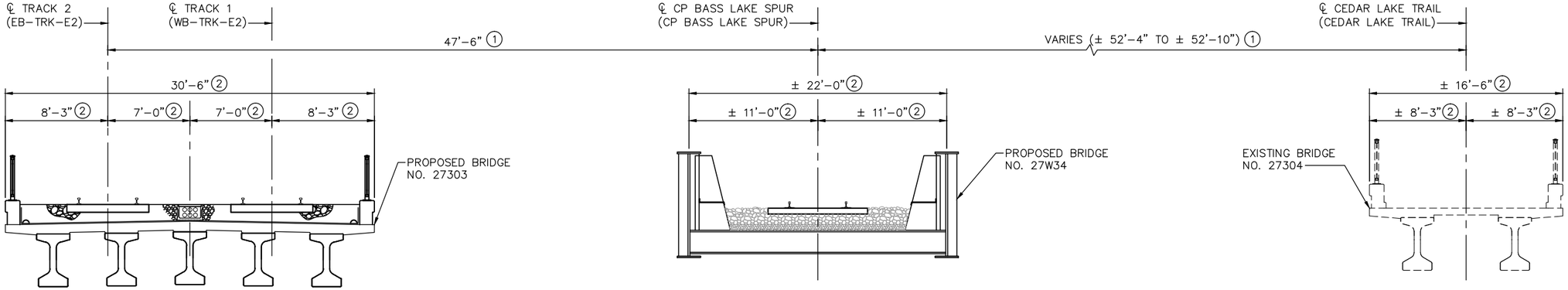

TYPICAL SECTION – FINAL CONDITION

NOTES:

(1) DIMENSION MEASURED PERPENDICULAR TO ℄ CP BASS LAKE SPUR.

(2) DIMENSION MEASURED PERPENDICULAR TO SUPERSTRUCTURE ALIGNMENT.

DRAFT-WORK IN PROCESS

NO.	DATE	BY	CHECK	DESIGN	REVISION / SUBMITTAL

DESIGNED BY: KAE CHECKED BY: MDJ
DRAWN BY: LMT CHECKED BY: MDJ

AECOM Kimley»Horn

90% SUBMISSION - 01/22/16

METROPOLITAN COUNCIL

SOUTHWEST Green Line LRT Extension

CIVIL - VOLUME 4F
TH 100 FREIGHT RAIL BRIDGE
BRIDGE 27W34
STAGING PLAN 8

DISCIPLINE: STRUCTURES

SHEET NAME: CBR27W34-BRG-STG-001-8

SHEET 68 OF 68

Dec, 11 2015 11:31 am V:\3400_ADC\CAD\SEGMENT E2\PLAN SHEETS\STRUCTURES\T100-FRT\CBR27W34-BRG-STG-001.dwg By: Katie.Ellis

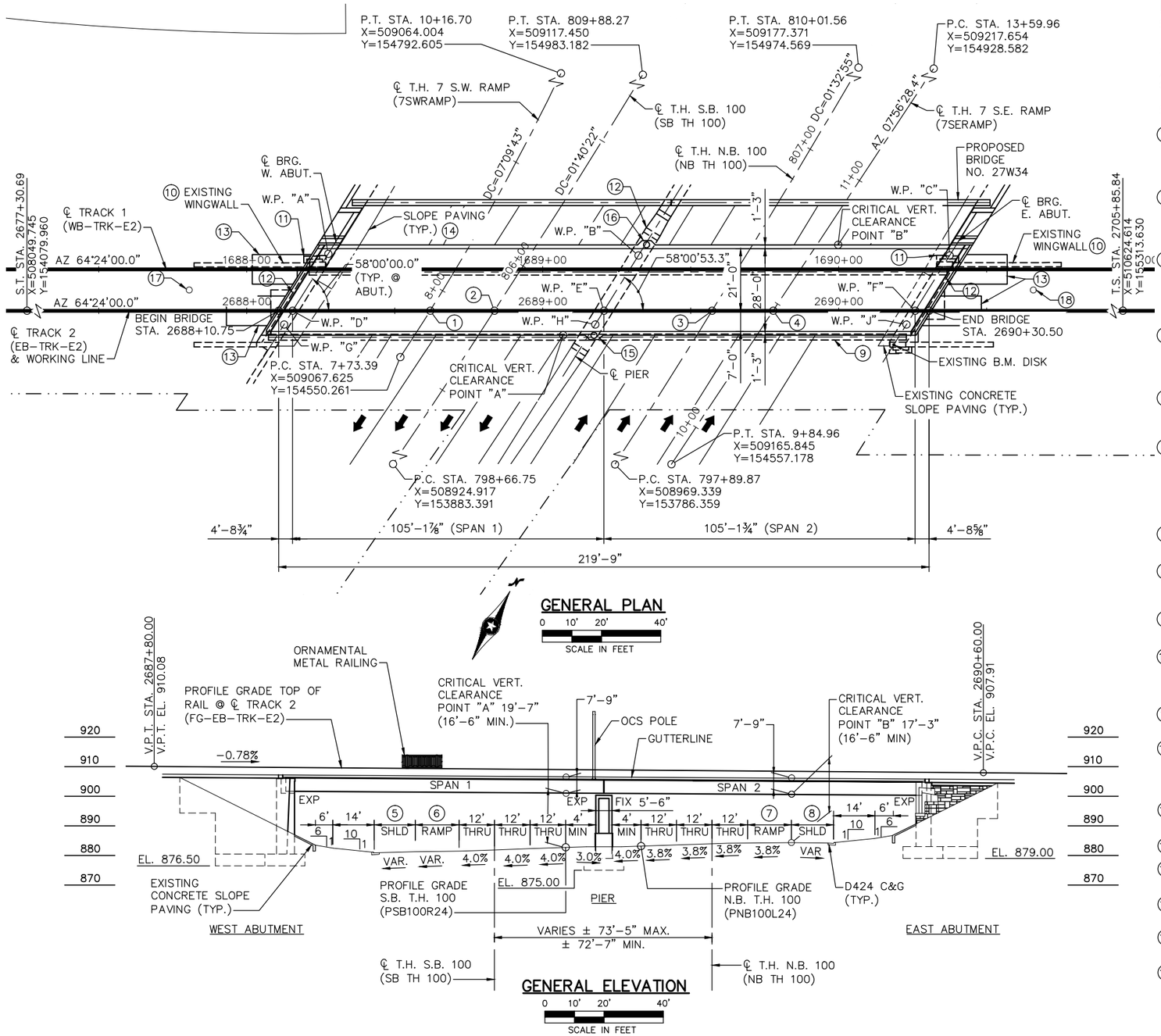

NOTES:

SEE BRIDGE SURVEY PLAN SHEET FOR INPLACE UTILITIES.

EXISTING SUBSTRUCTURES SET PARALLEL AT AZ 6°23'07"

ABUTMENT EXTENSIONS AZIMUTH SET TO 58°00'0.0" SKEW TO ℄ TRACK 2 TO MATCH EXISTING BRIDGE NO. 27303 SKEW.

SEE SHEET NO. 45-52 FOR PROPOSED STAGING.

1. ℄ TRACK 2 (EB-TRK-E2) P.O.T. STA. 2688+61.96
   ℄ T.H. 7 S.W. RAMP (7SWRAMP) P.O.C. STA. 7+92.04
   X = 509069.458 Y = 154568.764
   ∠ = 57°52'43.6" (T.T.C.)
2. ℄ TRACK 2 (EB-TRK-E2) P.O.T. STA. 2688+83.63
   ℄ T.H. S.B. 100 (SB TH 100) P.O.C. STA. 805+82.02
   X = 509089.502 Y = 154578.128
   ∠ = 57°03'17.6" (T.T.C.)
3. CONTROL POINT 1
   ℄ TRACK 2 (EB-TRK-E2) P.O.T. STA. 2689+57.19
   ℄ T.H. N.B. 100 (NB TH 100) P.O.C. STA. 806+36.12
   X = 509155.844 Y = 154609.913
   ∠ = 58°11'31.4" (T.T.C.)
4. ℄ TRACK 2 (EB-TRK-E2) P.O.T. STA. 2689+77.82
   ℄ T.H. 7 S.E. RAMP (7SERAMP) P.O.T. STA. 10+47.20
   X = 509174.444 Y = 154618.825
   ∠ = 56°27'31.6"
5. VARIES FROM 6.00' @ ℄ T.H. S.B. 100 (SB TH 100) STA. 804+95.58 TO 2.02' @ STA. 807+00.42. CROSS SLOPE VARIES FROM 4.0% @ STA. 805+42 TO 6.0% @ STA. 806+38.
6. VARIES FROM 12.00' @ ℄ T.H. S.B. 100 (SB TH 100) STA. 804+95.58 TO 26.64' @ STA. 807+00.42. CROSS SLOPE VARIES FROM 4.0% @ STA. 805+42 TO 6.0% @ STA. 806+38. VARYING CROSS SLOPE ONLY APPLIES TO THE 12.00' OF RAMP WIDTH ADJACENT TO THE SHOULDER. THE BALANCE ADJACENT TO THE THRU LANE IS 4.0%.
7. VARIES FROM 12.00' PRIOR TO ℄ T.H. N.B. 100 (NB TH 100) STA. 806+59.82 TO 20.00' @ STA. 808+01.83.
8. VARIES FROM 10.00' PRIOR TO ℄ T.H. N.B. 100 (NB TH 100) STA. 806+59.82 TO 2.00' @ STA. 808+01.83. CROSS SLOPE VARIES FROM 3.2% @ STA. 806+60 TO 2.0% @ STA. 807+18.
9. EXISTING BRIDGE NO. 27303 SUPERSTRUCTURE TO BE RELOCATED (UNDER BRIDGE NO. 27W34)
10. REMOVE EXISTING WINGWALL TO JUST BELOW THE BOTTOM OF THE TRANSITION SLAB FOUNDATION. REMOVE AND RETAIN ORNAMENTAL METAL RAILING FOR INSTALLATION ONTO BRIDGE NO. 27W34 NORTHWEST AND NORTHEAST WINGWALLS.
11. REMOVE EXISTING PILASTER FULL HEIGHT TO ALLOW EXISTING ABUTMENT EXTENSION.
12. EXISTING ABUTMENT & PIER TO BE MODIFIED TO UTILIZE A STEEL MASONRY PLATE ATOP AN ELASTOMERIC PAD OR A HIGH STRENGTH GROUT PAD SUPPORTING THE EXPANSION BEARING.
13. MODIFY EXISTING ABUTMENT FOR TRANSITION SLAB. SEE TRACK PLANS FOR TRANSITION SLAB DETAILS.
14. SLOPE PAVING PROVIDED UNDER BRIDGE NO. 27W34.
15. OVERHEAD CATENARY SYSTEM POLE SUPPORT STATION 2689+17.29.
16. OVERHEAD CATENARY SYSTEM POLE SUPPORT STATION 2689+35.06.
17. OVERHEAD CATENARY SYSTEM POLE SUPPORT STATION 2687+80.49.
18. OVERHEAD CATENARY SYSTEM POLE SUPPORT STATION 2690+65.69.

DESIGN DATA

2014 AASHTO LRFD BRIDGE DESIGN SPECIFICATIONS, 7TH EDITION, 2014 WITH 2015 INTERIM REVISIONS

SOUTHWEST LIGHT RAIL TRANSIT DESIGN CRITERIA (REVISION 4.0)

LOAD AND RESISTANCE FACTOR DESIGN METHOD

LRV & MV LOADING DIAGRAM SHOWN ON SHEET 2

MATERIAL DESIGN PROPERTIES
REINFORCED CONCRETE:
f'c = 4 KSI n = 8
fy = 60 KSI REINFORCEMENT

PRESTRESSED CONCRETE:
f'c = 8 KSI n = 6
fpu = 270 KSI
FOR 0.6" DIA. LOW RELAXATION STRANDS

PROJECTED TRAFFIC VOLUMES:
2034 A.D.T. ROADWAY UNDER - 125,000
2034 D.H.V. ROADWAY UNDER - 111,000
2034 A.D.T.T. ROADWAY UNDER - 3,900

DESIGN SPEED: OVER = 65 MPH
UNDER = 60 MPH

DECK AREA = 6700 SQ. FT.

LIST OF SHEETS

NO.	DESCRIPTION
1	GENERAL PLAN AND ELEVATION
2	TRANSVERSE SECTION AND QUANTITIES
3	BRIDGE LAYOUT
4-8	WEST ABUTMENT DETAILS
9-12	WEST ABUTMENT REINFORCEMENT
13-17	EAST ABUTMENT DETAILS
18-21	EAST ABUTMENT REINFORCEMENT
22	PIER DETAILS
23	FRAMING PLAN
24	MN54 PRESTRESSED CONCRETE BEAM
25-30	SUPERSTRUCTURE DETAILS
31	RAILING DETAILS
32	CONCRETE PARAPET (TYPE P-1)
33-34	DECK DRAINAGE AND WATERPROOFING
35	WATERPROOF EXPANSION DEVICE
36-38	BRIDGE DETAILS
39	AS-BUILT BRIDGE DATA
40	BRIDGE SURVEY
41	BRIDGE SURVEY PLAN
43-44	BRIDGE SURVEY PROFILE
45-52	STAGING PLANS

BRIDGE NO. 27303

SOUTHWEST LRT OVER T.H. 100
0.2 MILES SOUTH OF JCT. T.H. 7
IN ST. LOUIS PARK

105'-105' PCB SPANS
58°-00'-00" SKEW

BRIDGE I.D. NO. 501

GENERAL PLAN AND ELEVATION

SEC 6 T 28N R 24W
CITY OF ST. LOUIS PARK HENNEPIN COUNTY

APPROVED: _____ DATE: _____
STATE BRIDGE ENGINEER

DRAFT WORK IN PROCESS

JOB NO.: T9N635 | STATE PROJ. NO.: 9909-01 | MNDOT REVIEW: JOE NIETFELD

NO.	DATE	BY	CHECK	DESIGN	REVISION / SUBMITTAL

DESIGNED BY: KAE CHECKED BY: MDJ
DRAWN BY: LMT CHECKED BY: MDJ

AECOM Kimley»Horn

90% SUBMISSION - 01/22/16

METROPOLITAN COUNCIL

SOUTHWEST Green Line LRT Extension

CIVIL - VOLUME 4F
TH 100 LRT BRIDGE
BRIDGE 27303
GENERAL PLAN AND ELEVATION

DISCIPLINE: STRUCTURES
SHEET NAME: CBR27303-BRG-GPE

SHEET 1 OF 52

Dec, 11 2015 04:32 pm V:\3400_ADC\CAD\SEGMENT E2\PLAN SHEETS\STRUCTURES\T100-LRT\CBR27303-BRG-GPE.dwg By: Katie.Ellis

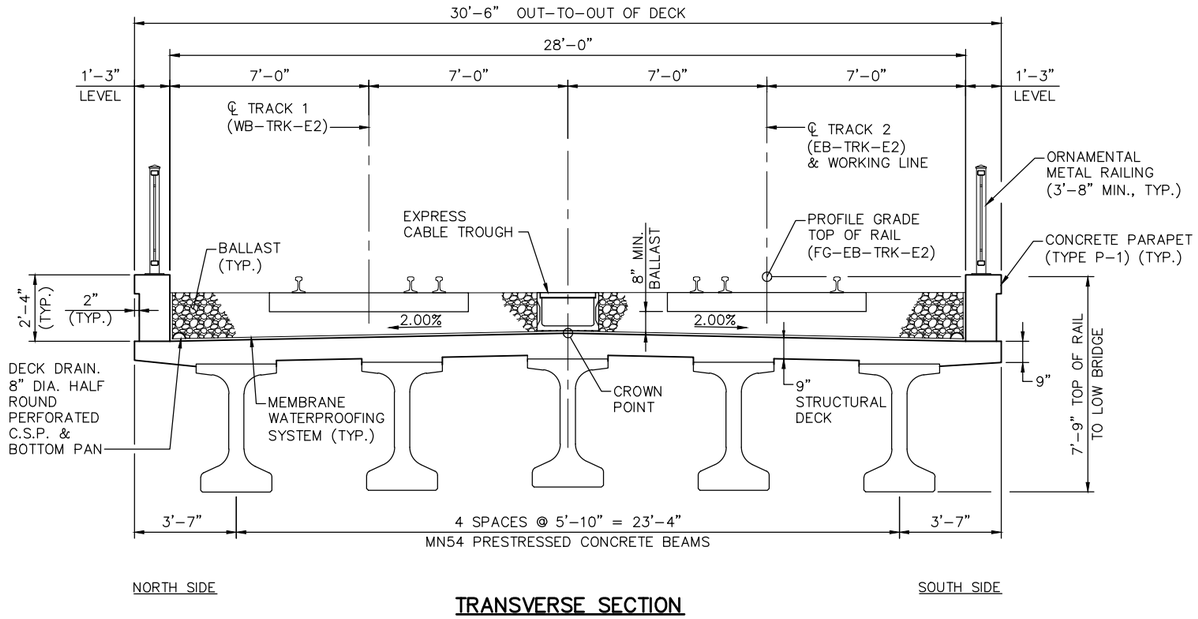

TRANSVERSE SECTION

0 1' 2' 4'

SCALE IN FEET

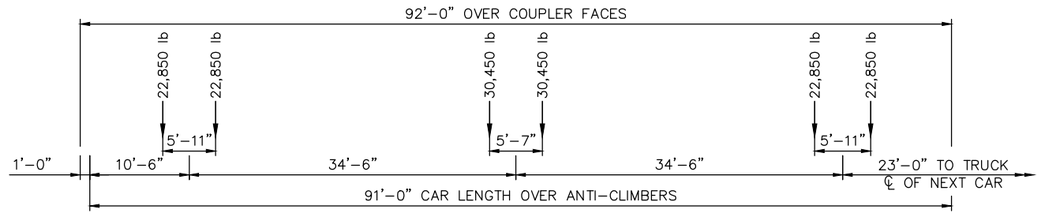

LIGHT RAIL VEHICLE LOADING DIAGRAM

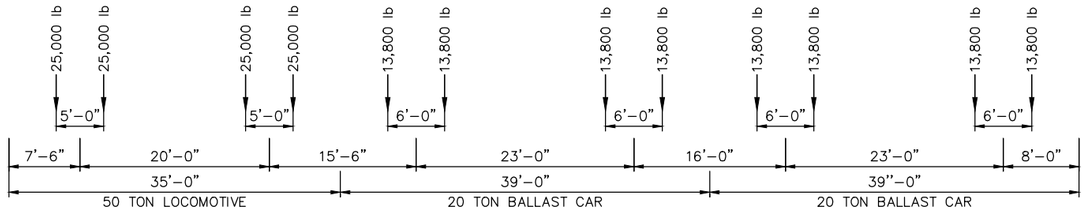

MAINTENANCE TRAIN LOADING DIAGRAM

CONSTRUCTION NOTES:

THE 2016 EDITION OF THE MINNESOTA DEPARTMENT OF TRANSPORTATION "STANDARD SPECIFICATIONS FOR CONSTRUCTION" SHALL GOVERN.

BRIDGE SEAT REINFORCEMENT SHALL BE CAREFULLY PLACED TO AVOID INTERFERENCE WITH DRILLING HOLES FOR ANCHOR RODS. THE BEAMS SHALL BE ERECTED IN FINAL POSITION PRIOR TO DRILLING HOLES FOR AND PLACING ANCHOR RODS.

THE BAR SIZES SHOWN IN THIS PLAN ARE IN U.S. CUSTOMARY DESIGNATIONS. THE FIRST DIGIT OR THE FIRST TWO DIGITS OF EACH BAR MARK INDICATE THE BAR SIZE.

BARS MARKED WITH THE SUFFIX "E" SHALL BE EPOXY COATED IN ACCORDANCE WITH SPEC. 3301.

THE SUBSURFACE UTILITY INFORMATION IN THIS PLAN IS UTILITY QUALITY LEVEL D. THIS UTILITY QUALITY LEVEL WAS DETERMINED ACCORDING TO THE GUIDELINES OF CI/ASCE 38-02, ENTITLED "STANDARD GUIDELINES FOR THE COLLECTION AND DEPICTION OF EXISTING SUBSURFACE UTILITY DATA".

SCHEDULE OF QUANTITIES

SPEC. SECTION	ITEM	UNIT	QUANTITY
-	CONSTRUCT BRIDGE 27303	LUMP SUM	LS

COMPONENT ITEM SUMMARY (BRIDGE 27303)

SPEC. (2) SECTION	ITEM	UNIT (1)	QUANTITY (1)
SB-XX	BALLAST (CV)	CU. YD.	228
2401	STRUCTURAL CONCRETE (3B52)	CU. YD.	196
2401	TYPE P-1 (TL-2) RAILING CONCRETE (3S52)	LIN. FT.	433
2401	REINFORCEMENT BARS (EPOXY COATED)	POUND	57600
SB-XX	STRUCTURE EXCAVATION	LUMP SUM	1
2401	BRIDGE SLAB CONCRETE (3YHPC-M)	SQ. FT.	6703
2402	ORNAMENTAL METAL RAILING TYPE SPECIAL	LIN. FT.	433
2402	EXPANSION JOINT DEVICES TYPE 4	LIN. FT.	58
2402	BEARING ASSEMBLY	EACH	20
2405	PRESETRESSED CONCRETE BEAMS MN54	LIN. FT.	
2405	DIAPHRAGMS FOR TYPE MN54 PRESTRESSED BEAMS	LIN. FT.	
SB-XX	ANTI-GRAFFITI COATING	SQ. FT.	231
SB-XX	ARCH CONC TEXTURE (ASHLAR STONE)	SQ. FT.	231
SB-XX	ARCH SURFACE FINISH (MULTICOLOR)	SQ. FT.	231
2433	STRUCTURE REMOVALS	LUMP SUM	1
SB-XX	STEEL SHEET PILING (TEMPORARY)	LUMP SUM	1
2481	DAMPROOFING	SQ. FT.	853
2481	WATERPROOFING	SQ. FT.	6077
SB-XX	DRAINAGE SYSTEM (ABUTMENT)	LUMP SUM	1
2502	DRAINAGE SYSTEM (BRIDGE DECK)	LUMP SUM	1
2545	CONDUIT SYSTEM (LIGHTING)	LUMP SUM	1

NOTES:

THE LRT TRAIN SHALL CONSIST OF EITHER ONE, TWO, OR THREE CARS, WHICHEVER PRODUCES THE MAXIMUM LOAD FOR THE ELEMENT UNDER CONSIDERATION.

AXLE LOAD IN POUNDS.

LOADING DIAGRAM REPRESENTS MAXIMUM LOAD AT EACH TRUCK.

NOTES:

THE MAINTENANCE TRAIN SHALL CONSIST OF ONE LOCOMOTIVE AND ONE, TWO, THREE, OR FOUR BALLAST CARS, WHICHEVER PRODUCES THE MAXIMUM LOAD FOR THE ELEMENT UNDER CONSIDERATION.

AXLE LOAD IN POUNDS.

WEIGHT OF EMPTY BALLAST CAR IS 15,000 POUNDS.

NOTES:

(1) QUANTITIES LISTED FOR THE COMPONENT ITEMS OF THE LUMP SUM BR 27303 ITEM ARE FOR INFORMATION PURPOSES. ANY ADDITIONAL ITEMS OR CHANGES IN QUANTITIES REQUIRED SHALL BE PROVIDED BY THE CONTRACTOR WITH NO ADDITIONAL COMPENSATION.

(2) MEASUREMENT AND PAYMENT FOR COMPONENT ITEMS SHALL BE PART OF THE LUMP SUM PAYMENT FOR BR 27303. REFER TO MNDOT STANDARD SPECIFICATION OR SPECIAL PROVISION FOR TECHNICAL SPECIFICATION REQUIREMENTS FOR ALL PROVISION OTHER THAN MEASUREMENT AND PAYMENT REQUIREMENTS.

EXISTING BRIDGE 27303 SUPERSTRUCTURE TO BE RELOCATED TO NEW ALIGNMENT, AND RENUMBERED TO BRIDGE NO. 27W34.

DRAFT-WORK IN PROCESS

NO.	DATE	BY	CHECK	DESIGN	REVISION / SUBMITTAL

DESIGNED BY: KAE CHECKED BY: MDJ

DRAWN BY: LMT CHECKED BY: MDJ

AECOM Kimley»Horn

90% SUBMISSION - 01/22/16

METROPOLITAN COUNCIL

SOUTHWEST Green Line LRT Extension

CIVIL - VOLUME 4F
TH 100 LRT BRIDGE
BRIDGE 27303
TRANSVERSE SECTION AND QUANTITIES

DISCIPLINE: STRUCTURES

SHEET NAME: CBR27303-BRG-TRN

SHEET 2 OF 52

Dec, 11 2015 11:41 am V:\3400_ADC\CAD\SEGMENT E2\PLAN SHEETS\STRUCTURES\T100-LRT\CBR27303-BRG-TRN.dwg By: Katie.Ellis

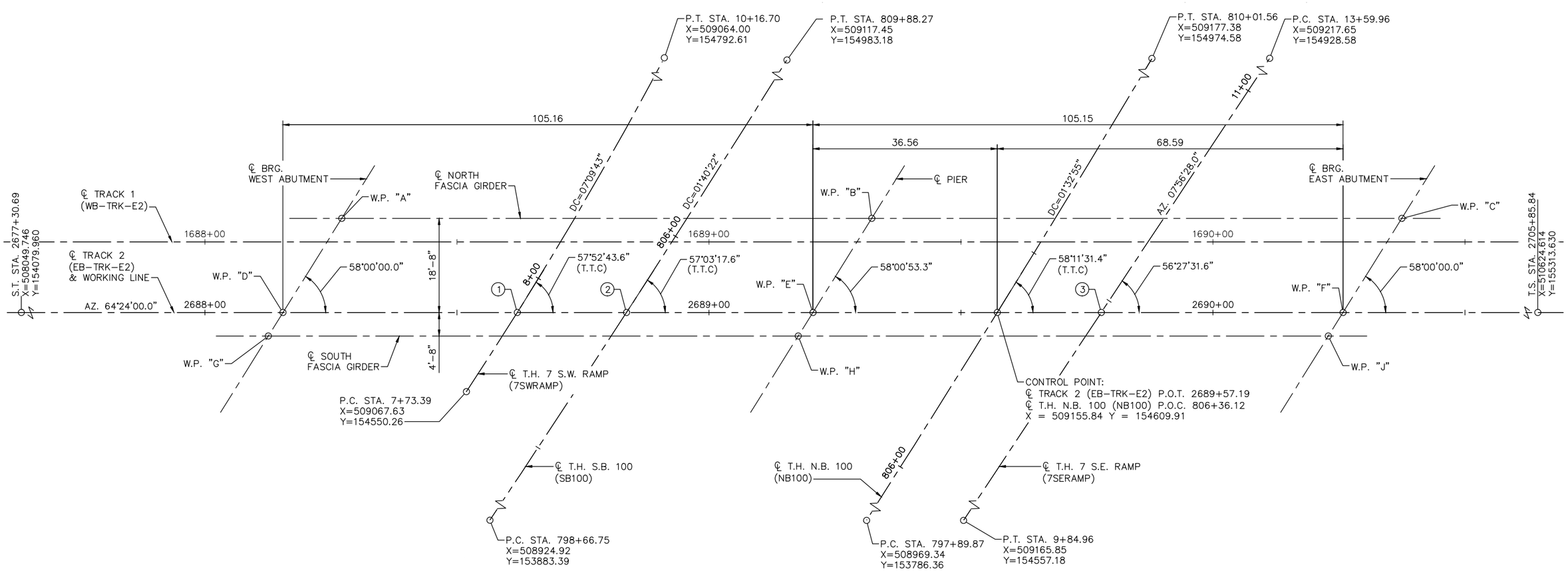

WORKING POINT LAYOUT

DIMENSIONS BETWEEN WORKING POINTS											COORDINATES		ELEVATION			
POINT	STATION	A	B	C	D	E	F	G	H	J	X	Y	TOP OF SLAB	TOP OF SLAB TO BR. SEAT	BRIDGE SEAT	POINT
A	2688+27.05		105.15		22.01	95.34			93.54	197.12	509030.49	154570.55	907.54	6.00	901.54	A
B	2689+32.05			105.15		22.01	95.34	121.98		93.54	509125.32	154615.99	906.72	5.84	900.88	B
C	2690+37.04						22.01	226.08	121.98		509220.15	154661.42	905.90	6.00	899.90	C
D	2688+15.48					105.15		5.50	102.34		509028.04	154548.68	907.72	–	--	D
E	2689+20.64						105.15		5.50	102.34	509122.87	154594.12	906.90	–	--	E
F	2690+25.78									5.50	509217.70	154639.55	906.09	–	--	F
G	2688+12.47								105.15		509027.43	154543.21	907.65	6.00	901.65	G
H	2689+17.47									105.15	509122.26	154588.65	906.83	5.84	900.99	H
J	2690+22.46										509217.09	154634.08	906.01	6.00	900.01	J

NOTES:

1. ℄ TRACK 2 (EB–TRK–E2) P.O.T. 2688+61.96
   ℄ T.H. 7 S.W. RAMP (7SWRAMP) P.O.C. 7+92.04
   X = 509069.96 Y = 154568.76
2. ℄ TRACK 2 (EB–TRK–E2) P.O.T. 2688+83.63
   ℄ T.H. S.B. 100 (SB100) P.O.C. 805+82.02
   X = 509089.502 Y = 154578.128
3. ℄ TRACK 2 (EB–TRK–E2) P.O.T. 2689+77.82
   ℄ T.H. 7 S.E. RAMP (7SERAMP) P.O.T. 10+47.20
   X = 509174.44 Y = 154618.83

DRAFT-WORK IN PROCESS

NO.	DATE	BY	CHECK	DESIGN	REVISION / SUBMITTAL

DESIGNED BY: KAE | CHECKED BY: MDJ
DRAWN BY: LMT | CHECKED BY: MDJ

AECOM Kimley»Horn

90% SUBMISSION - 01/22/16

METROPOLITAN COUNCIL

SOUTHWEST Green Line LRT Extension

CIVIL - VOLUME 4F
TH 100 FREIGHT RAIL BRIDGE
BRIDGE 27303
BRIDGE LAYOUT

DISCIPLINE: STRUCTURES
SHEET NAME: CBR27303-BRG-SUP-001

SHEET 3 OF 52

Dec, 11 2015 11:42 am V:\3400_ADC\CAD\SEGMENT E2\PLAN SHEETS\STRUCTURES\T100-LRT\CBR27303-BRG-SUP-001.dwg By: Katie.Ellis

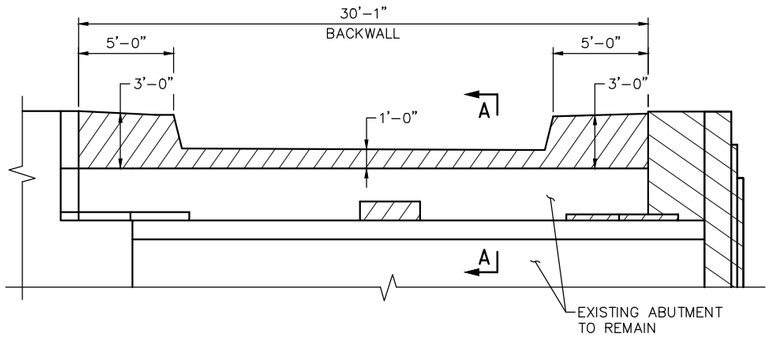

SOUTH SIDE

REMOVAL ELEVATION

(WINGWALLS & SOUTH MASK WALL NOT SHOWN FOR CLARITY)

NORTH SIDE

NOTE:
SEE SHEET 6 FOR
BRIDGE SEAT REMOVALS

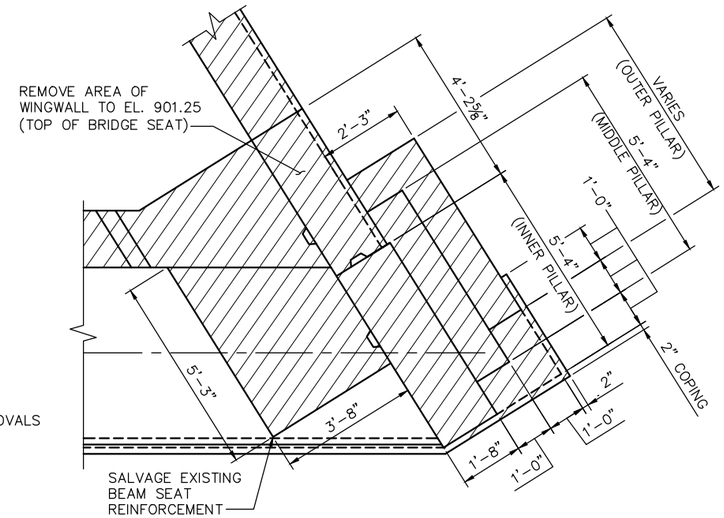

SECTION C–C

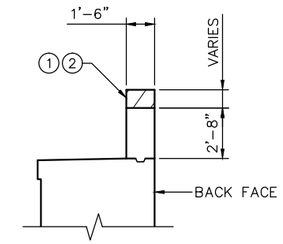

SECTION A–A

(SECTION THRU ABUTMENT)

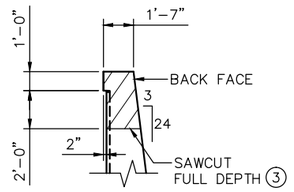

SECTION B–B

NOTES:

REMOVAL SHALL INCLUDE CONCRETE, REINFORCING STEEL, AND EMBEDS UNLESS NOTED OTHERWISE.

1. REMOVAL INCLUDES EXISTING BACKWALL PROTECTION ANGLES.
2. SALVAGE EXISTING #5 VERTICAL REINFORCEMENT @ 12" SPA.
3. COAT CUT ENDS OF REINFORCING STEEL WITH AN EPOXY FROM THE MNDOT APPROVED/QUALIFIED PRODUCTS LIST FOR PRESTRESSED BEAMS – CUT STRAND SEALANT.

LEGEND

REMOVAL AREAS

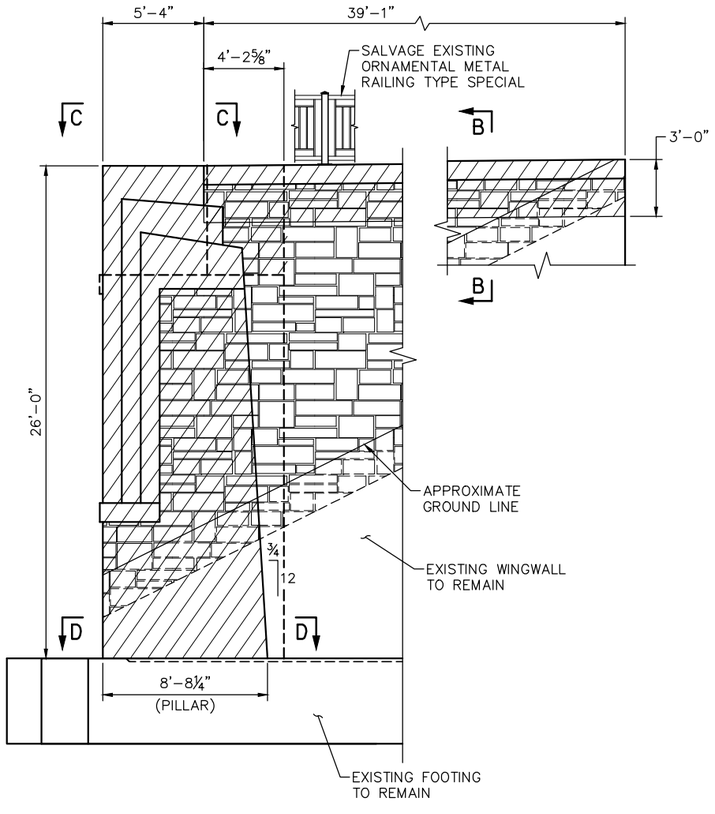

N.W. WINGWALL REMOVAL ELEVATION

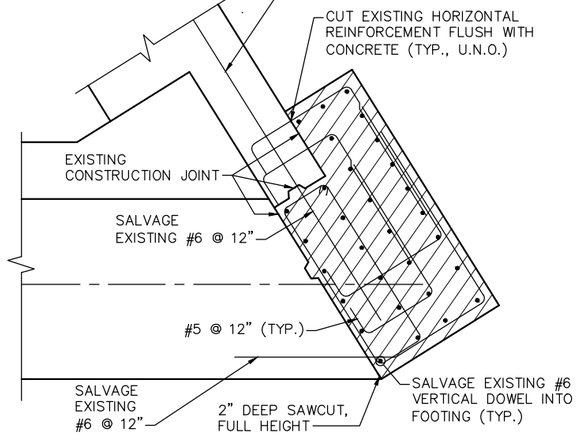

SECTION D–D

(REINFORCEMENT IS SHOWN FOR INFORMATION ONLY)

DRAFT-WORK IN PROCESS

NO.	DATE	BY	CHECK	DESIGN	REVISION / SUBMITTAL

DESIGNED BY: BAW CHECKED BY: MDJ
DRAWN BY: LMT CHECKED BY: MDJ

AECOM Kimley»Horn

90% SUBMISSION - 01/22/16

METROPOLITAN COUNCIL

SOUTHWEST Green Line LRT Extension

CIVIL - VOLUME 4F
TH 100 LRT BRIDGE
BRIDGE 27303
WEST ABUTMENT DETAILS 1

DISCIPLINE: STRUCTURES
SHEET NAME: CBR27303-BRG-ABT-001

SHEET 4 OF 52

Dec, 11 2015 11:42 am V:\3400_ADC\CAD\SEGMENT E2\PLAN SHEETS\STRUCTURES\T100-LRT\CBR27303-BRG-ABT-001.dwg By: Katie.Ellis

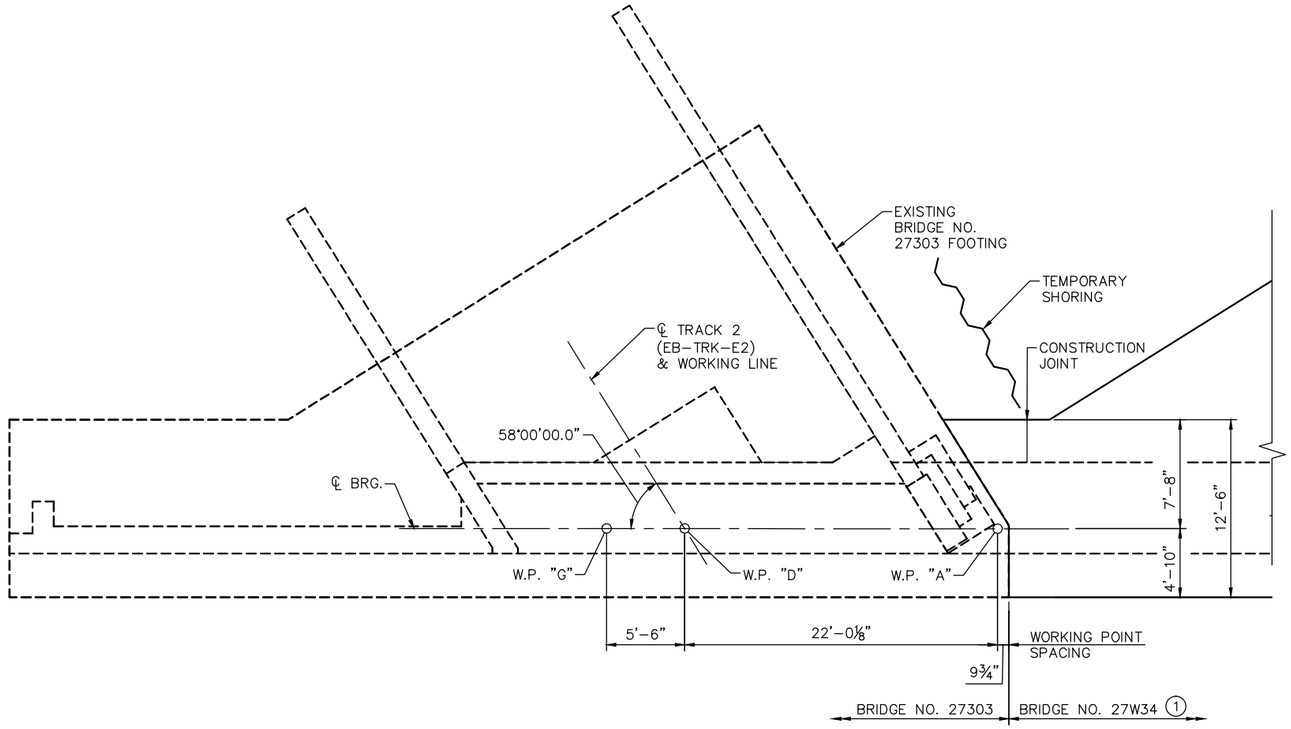

FOOTING PLAN (1)

WEST ABUTMENT SPREAD FOOTING LOAD DATA	
* FACTORED DESIGN BEARING PRESSURE	3.8 TONS/ SQ FT
EFFECTIVE WIDTH B'	19.9 FT
FACTORED BEARING RESISTANCE $\varphi b \cdot q_n$	3.9 TONS/ SQ FT

* BASED ON STRENGTH I LOAD COMBINATION.

NOTES:

(1) FOOTING PLAN PROVIDED TO SHOW GENERAL FOOTING ORIENTATION. FOOTING CONCRETE AND REINFORCEMENT TO BE PROVIDED UNDER BRIDGE NO. 27W34.

DRAFT-WORK IN PROCESS

NO.	DATE	BY	CHECK	DESIGN	REVISION / SUBMITTAL

DESIGNED BY: BAW | CHECKED BY: MDJ
DRAWN BY: LMT | CHECKED BY: MDJ

AECOM Kimley»Horn

90% SUBMISSION - 01/22/16

METROPOLITAN COUNCIL

SOUTHWEST Green Line LRT Extension

CIVIL - VOLUME 4F
TH 100 LRT BRIDGE
BRIDGE 27303
WEST ABUTMENT DETAILS 2

DISCIPLINE: STRUCTURES

SHEET NAME: CBR27303-BRG-ABT-002-1

SHEET 5 OF 52

Dec, 11 2015 11:42 am V:\3400_ADC\CAD\SEGMENT E2\PLAN SHEETS\STRUCTURES\T100-LRT\CBR27303-BRG-ABT-002.dwg By: Katie.Ellis

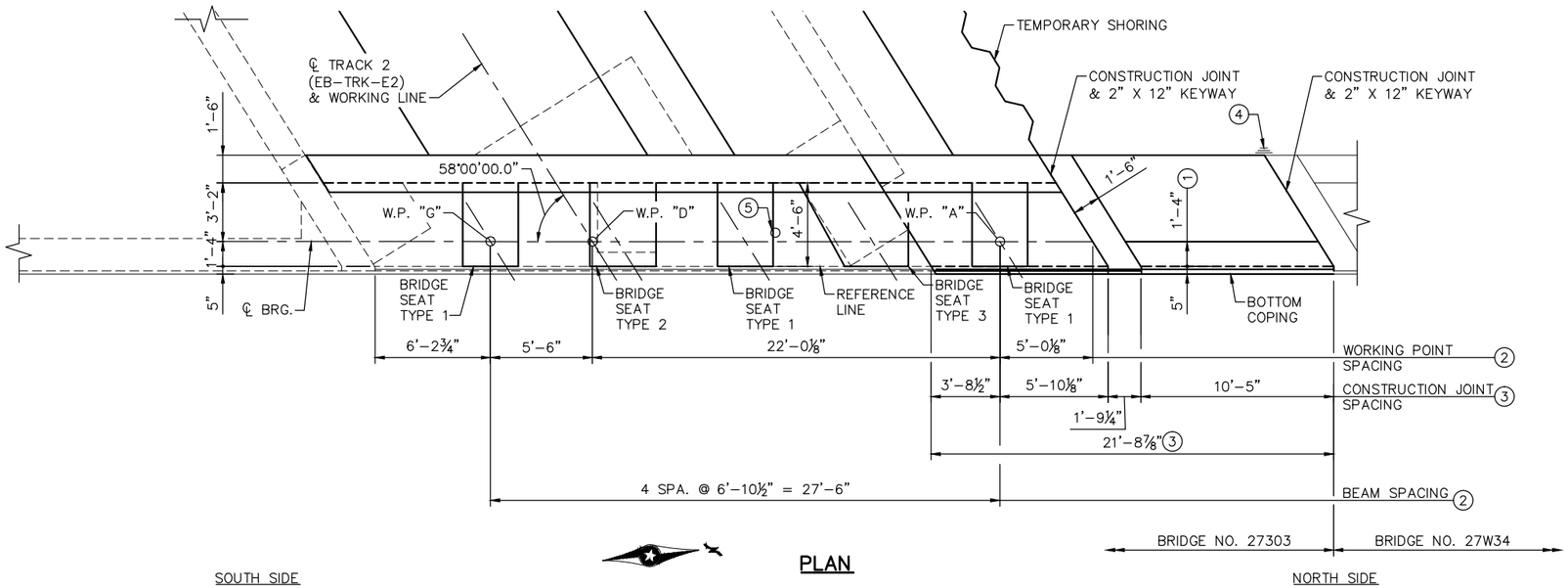

PLAN

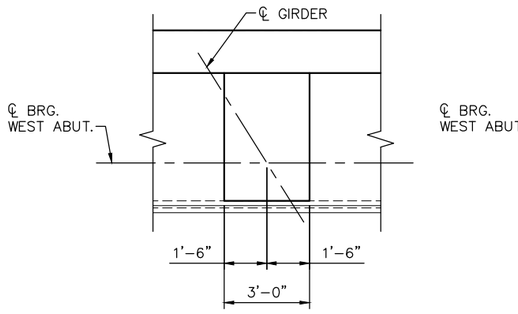

BRIDGE SEAT TYPE 1

TYP. 3 PLACES

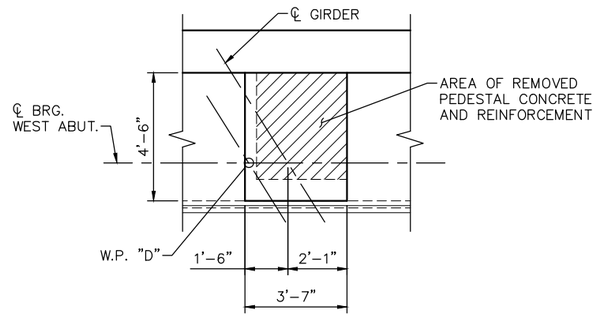

BRIDGE SEAT TYPE 2

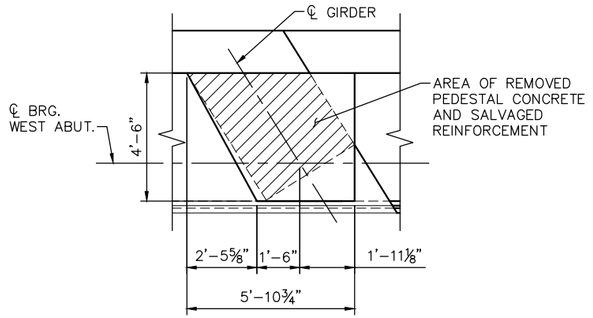

BRIDGE SEAT TYPE 3

NOTES:

A 72 HOUR DELAY IS REQUIRED BETWEEN ALL ADJACENT POURS OF WALLS AND STEMS.

DAMPROOFING SHALL BE APPLIED TO THE BACK FACE OF THE ABUTMENT, AND NORTHWEST WINGWALL FROM TOP OF FOOTING TO WITHIN 6" FROM TOP OF ABUTMENT/WINGWALL.

(1) DIMENSIONS SHOWN AT TOP OF WALL.

(2) MEASURED ALONG ℄ BEARING.

(3) MEASURED ALONG REFERENCE LINE.

(4) MEMBRANE WATERPROOFING SYSTEM PER MnDOT SPEC. 2481.3.B.

(5) EXISTING CONDUIT

DRAFT-WORK IN PROCESS

NO.	DATE	BY	CHECK	DESIGN	REVISION / SUBMITTAL

DESIGNED BY: BAW | CHECKED BY: MDJ
DRAWN BY: LMT | CHECKED BY: MDJ

AECOM Kimley»Horn

90% SUBMISSION - 01/22/16

METROPOLITAN COUNCIL

SOUTHWEST Green Line LRT Extension

CIVIL - VOLUME 4F
TH 100 LRT BRIDGE
BRIDGE 27303
WEST ABUTMENT DETAILS 3

DISCIPLINE: STRUCTURES

SHEET NAME: CBR27303-BRG-ABT-002-2

SHEET 6 OF 52

Dec, 11 2015 11:43 am V:\3400_ADC\CAD\SEGMENT E2\PLAN SHEETS\STRUCTURES\T100-LRT\CBR27303-BRG-ABT-002.dwg By: Katie.Ellis

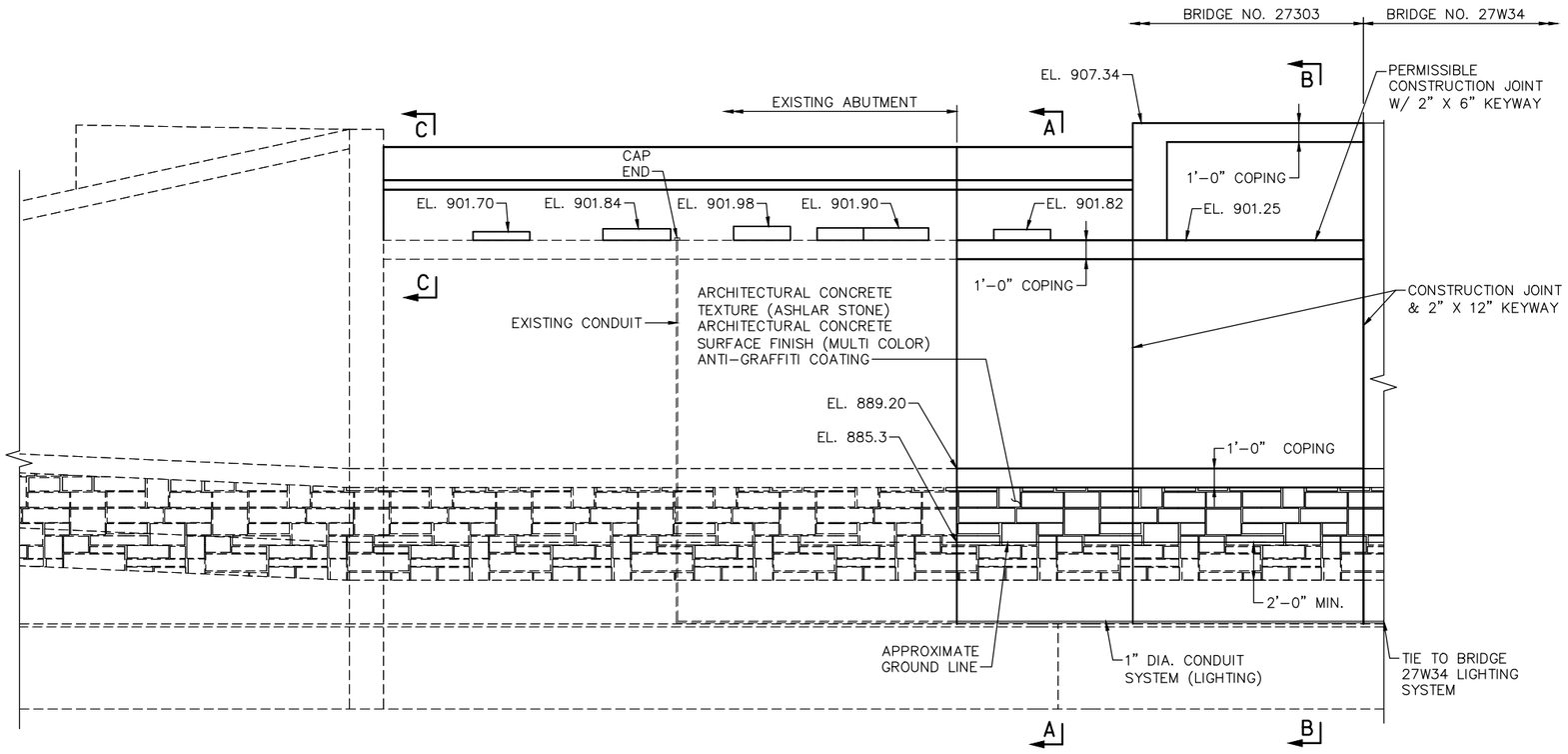

ELEVATION

NOTES:

FOR SECTIONS A-A, B-B & C-C SEE SHEET 8.

DRAFT-WORK IN PROCESS

NO.	DATE	BY	CHECK	DESIGN	REVISION / SUBMITTAL

DESIGNED BY: BAW CHECKED BY: MDJ
DRAWN BY: LMT CHECKED BY: MDJ

AECOM Kimley»Horn

90% SUBMISSION - 01/22/16

METROPOLITAN COUNCIL

SOUTHWEST Green Line LRT Extension

CIVIL - VOLUME 4F
TH 100 LRT BRIDGE
BRIDGE 27303
WEST ABUTMENT DETAILS 4

DISCIPLINE: STRUCTURES
SHEET NAME: CBR27303-BRG-ABT-002-3

SHEET 7 OF 52

Dec, 11 2015 11:43 am V:\3400_ADC\CAD\SEGMENT E2\PLAN SHEETS\STRUCTURES\T100-LRT\CBR27303-BRG-ABT-002.dwg By: Katie.Ellis

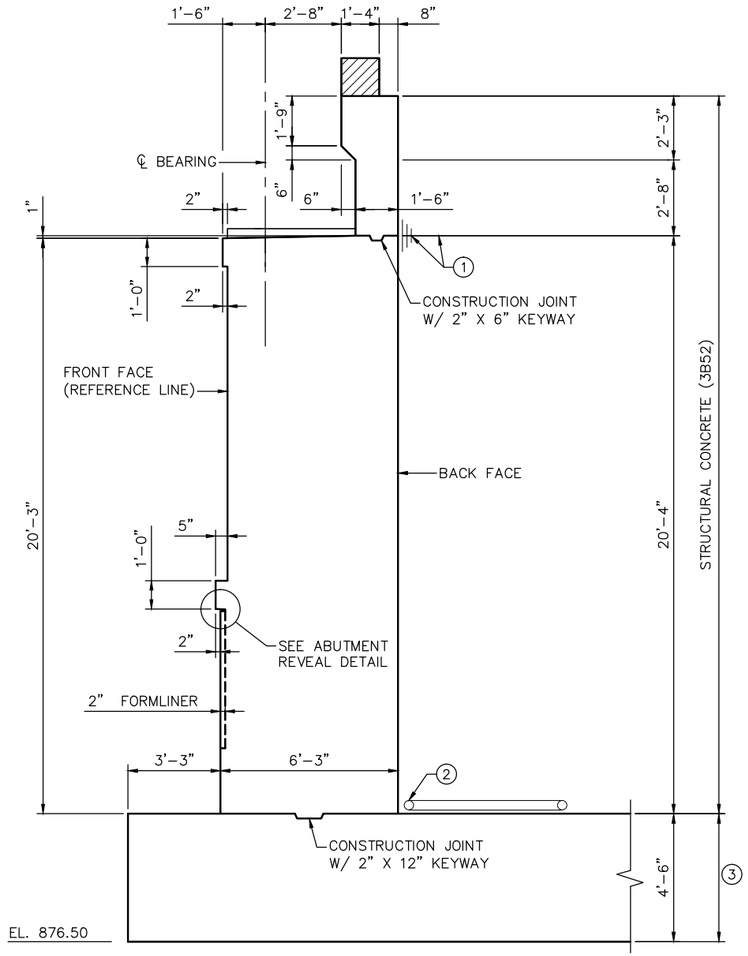

SECTION A–A
(SECTION THRU ABUTMENT)

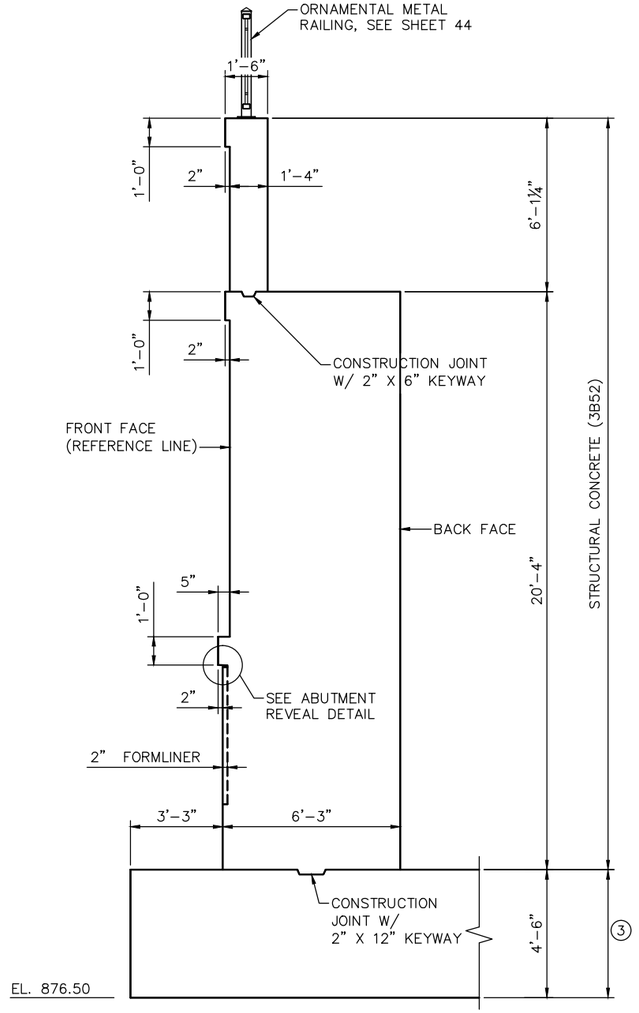

SECTION B–B
(SECTION THRU WALL)

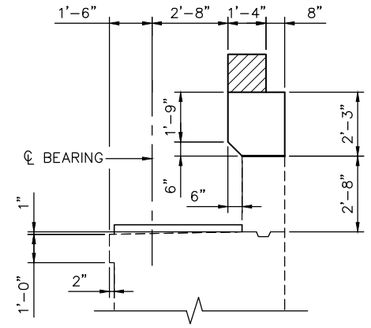

SECTION C–C
(SECTION THRU EXISTING ABUTMENT)

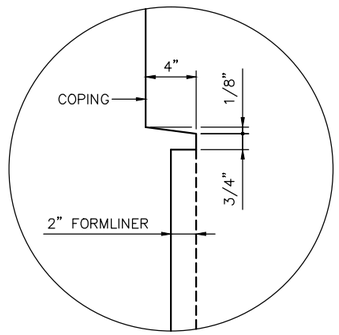

ABUTMENT REVEAL DETAIL

NOTES:

1. MEMBRANE WATERPROOFING SYSTEM PER MnDOT SPEC. 2481.3.B.
2. 4" NOMINAL DIA. PERFORATED PIPE, SEE DETAIL B910.
3. FOOTING PROVIDED BY BRIDGE NO. 27W34.

DRAFT-WORK IN PROCESS

NO.	DATE	BY	CHECK	DESIGN	REVISION / SUBMITTAL

DESIGNED BY: BAW | CHECKED BY: MDJ
DRAWN BY: LMT | CHECKED BY: MDJ

AECOM Kimley»Horn

90% SUBMISSION - 01/22/16

METROPOLITAN COUNCIL

SOUTHWEST Green Line LRT Extension

CIVIL - VOLUME 4F
TH 100 LRT BRIDGE
BRIDGE 27303
WEST ABUTMENT DETAILS 5

DISCIPLINE: STRUCTURES
SHEET NAME: CBR27303-BRG-ABT-002-4

SHEET 8 OF 52

Dec, 11 2015 11:43 am V:\3400_ADC\CAD\SEGMENT E2\PLAN SHEETS\STRUCTURES\T100-LRT\CBR27303-BRG-ABT-002.dwg By: Katie.Ellis

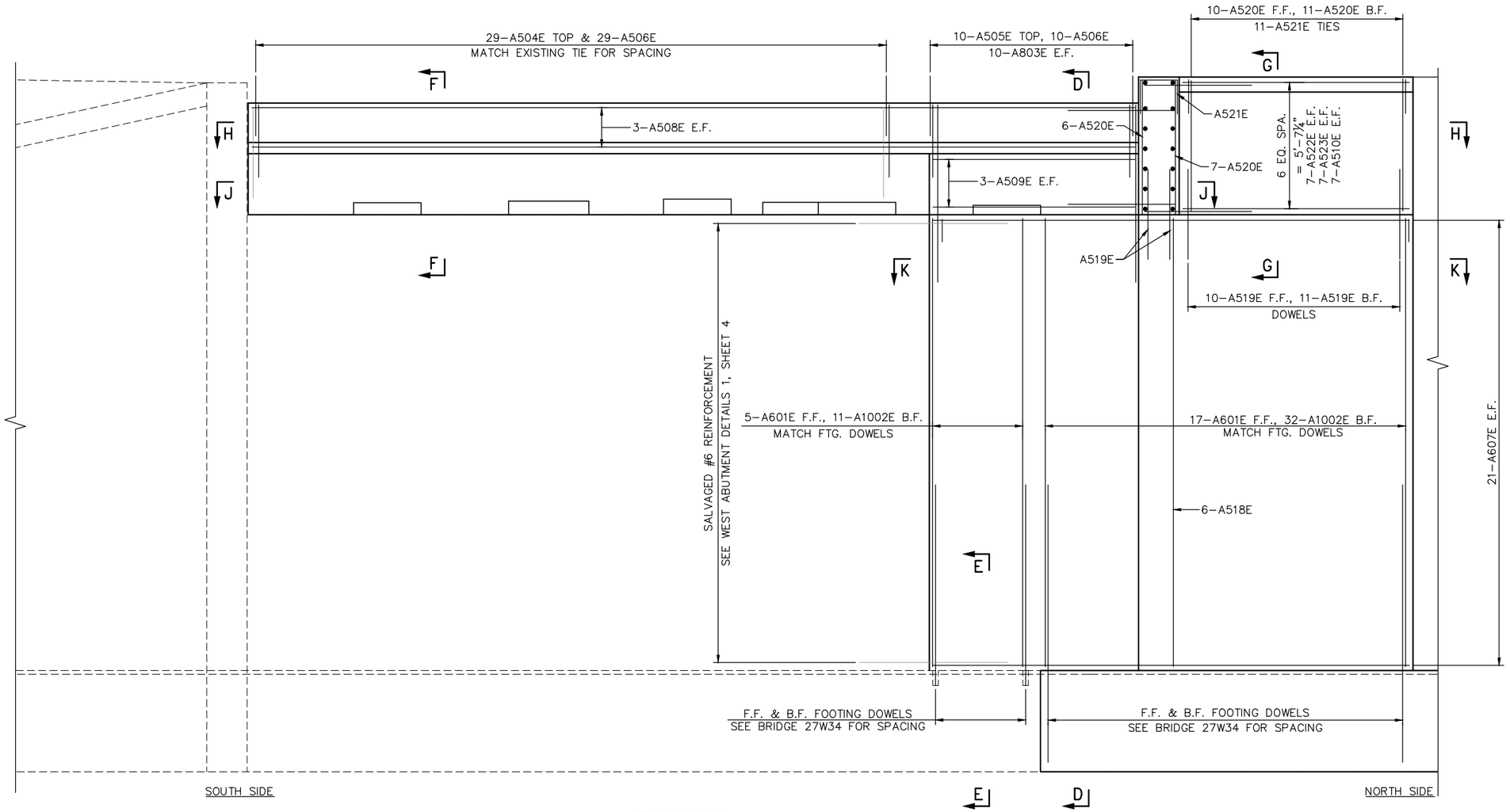

ELEVATION

NOTES:

F.F. DENOTES FRONT FACE.
B.F. DONOTES BACK FACE.
E.F. DONOTES EACH FACE.

FOR SECTIONS D–D, E–E, F–F & G–G SEE SHEET 10.

FOR SECTIONS H–H, J–J, & K–K, SEE SHEET 11.

DRAFT-WORK IN PROCESS

NO.	DATE	BY	CHECK	DESIGN	REVISION / SUBMITTAL

DESIGNED BY: BAW | CHECKED BY: MDJ
DRAWN BY: LMT | CHECKED BY: MDJ

AECOM Kimley»Horn

90% SUBMISSION - 01/22/16

METROPOLITAN COUNCIL

SOUTHWEST Green Line LRT Extension

CIVIL - VOLUME 4F
TH 100 LRT BRIDGE
BRIDGE 27303
WEST ABUTMENT REINFORCEMENT 1

DISCIPLINE: STRUCTURES
SHEET NAME: CBR27303-BRG-ABT-002-5

SHEET 9 OF 52

Dec, 11 2015 11:43 am V:\3400_ADC\CAD\SEGMENT E2\PLAN SHEETS\STRUCTURES\T100-LRT\CBR27303-BRG-ABT-002.dwg By: Katie.Ellis

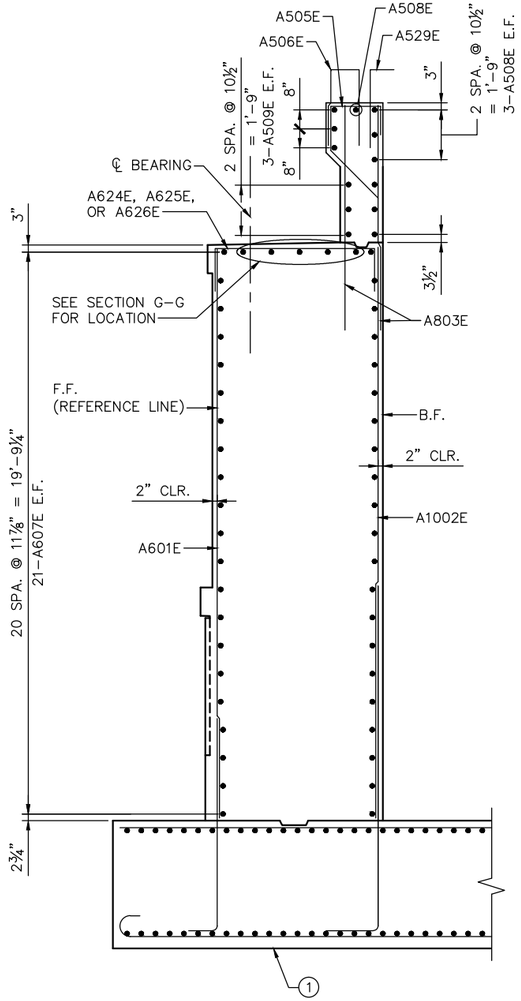

SECTION D–D
(SECTION THRU ABUTMENT)

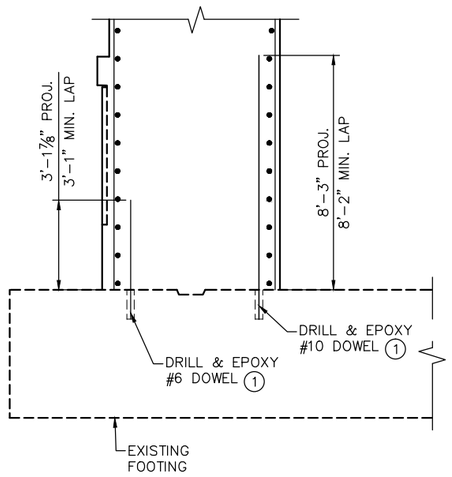

SECTION E–E
(SECTION THRU EXISTING FOOTING)

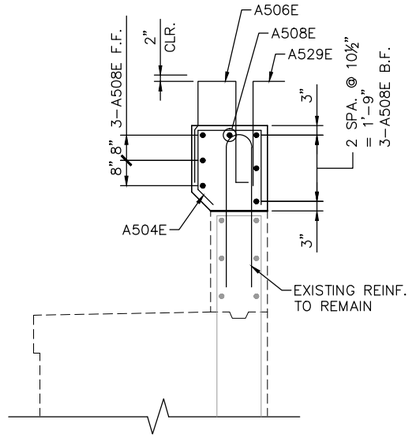

SECTION F–F
(SECTION THRU EXISTING ABUTMENT)

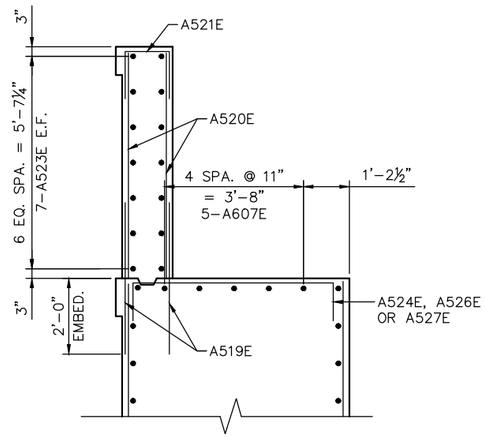

SECTION G–G
(SECTION THRU INFILL WALL)

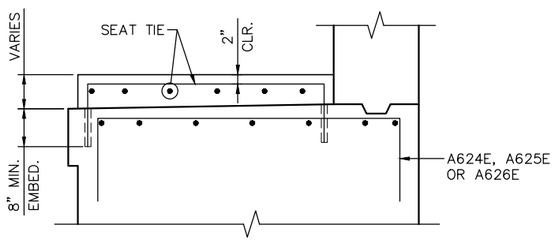

TYPICAL BRIDGE SEAT SECTION

NOTES:

F.F. DENOTES FRONT FACE.
B.F. DENOTES BACK FACE.
E.F. DENOTES EACH FACE.

SEE SHEET 9 FOR LOCATION OF SECTION D–D, E–E, F–F & G–G.

(1) SEE BRIDGE 27W43 FOR FOOTING REINFORCEMENT.

DRAFT-WORK IN PROCESS

NO.	DATE	BY	CHECK	DESIGN	REVISION / SUBMITTAL

DESIGNED BY: BAW | CHECKED BY: MDJ
DRAWN BY: LMT | CHECKED BY: MDJ

AECOM Kimley»Horn

90% SUBMISSION - 01/22/16

METROPOLITAN COUNCIL

SOUTHWEST Green Line LRT Extension

CIVIL - VOLUME 4F
TH 100 LRT BRIDGE
BRIDGE 27303
WEST ABUTMENT REINFORCEMENT 2

DISCIPLINE: STRUCTURES
SHEET NAME: CBR27303-BRG-ABT-002-6

SHEET 10 OF 52

Dec, 11 2015 11:43 am V:\3400_ADC\CAD\SEGMENT E2\PLAN SHEETS\STRUCTURES\T100-LRT\CBR27303-BRG-ABT-002.dwg By: Katie.Ellis

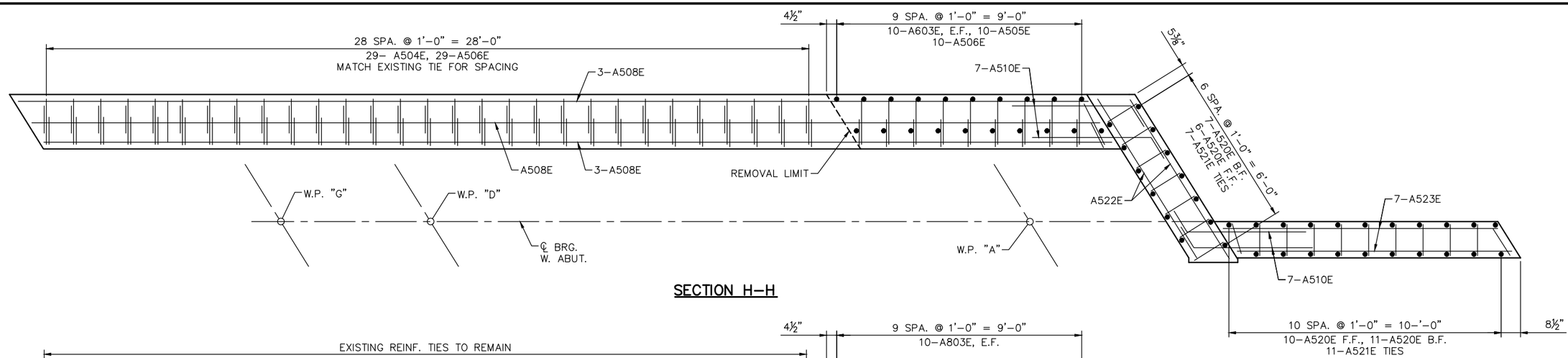

SECTION H-H

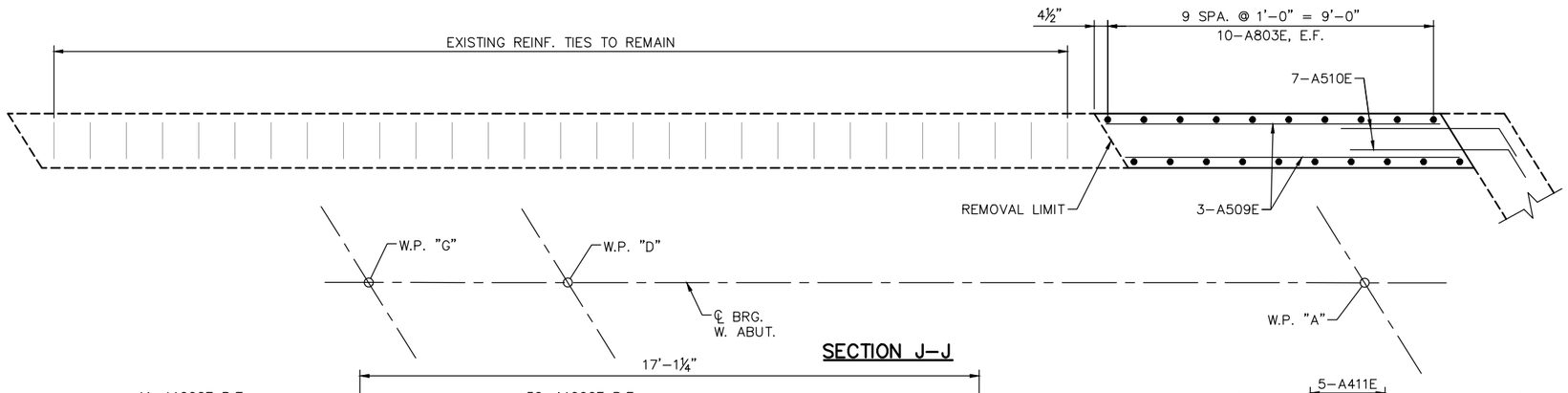

SECTION J-J

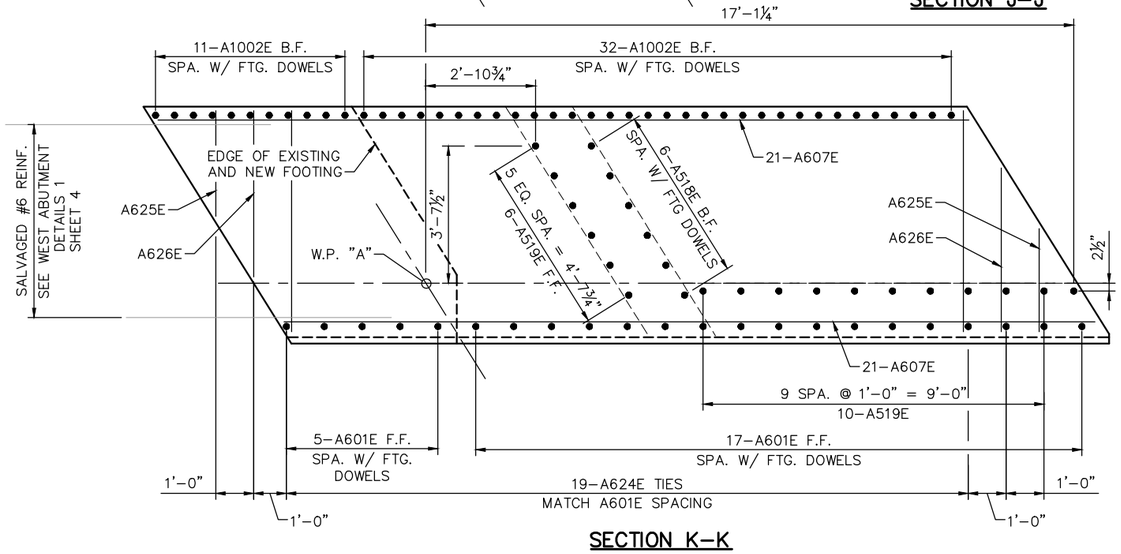

SECTION K-K

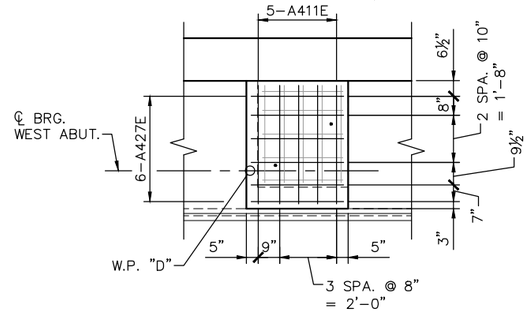

BRIDGE SEAT TYPE 2

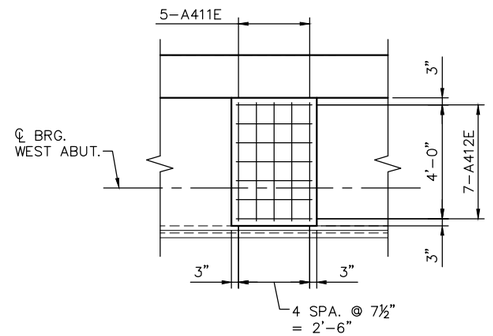

BRIDGE SEAT TYPE 1

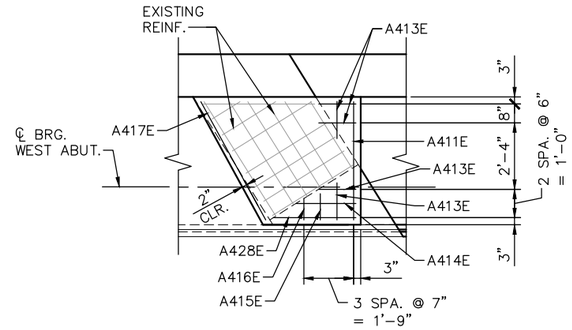

BRIDGE SEAT TYPE 3

NOTES:

DRILL & EPOXY (8" EMBED.) ALL BRIDGE SEAT TIES A411E THRU A417E, A427E AND A428E. SEE TYPICAL BRIDGE SEAT SECTION, SHEET 10.

F.F. DONOTES FRONT FACE.
B.F. DENOTES BACK FACE.
E.F. DENOTES EACH FACE.

SEE SHEET 9 FOR LOCATION OF SECTION H-H, J-J, & K-K.

DRAFT-WORK IN PROCESS

NO.	DATE	BY	CHECK	DESIGN	REVISION / SUBMITTAL

DESIGNED BY: BAW | CHECKED BY: MDJ
DRAWN BY: LMT | CHECKED BY: MDJ

AECOM Kimley»Horn

90% SUBMISSION - 01/22/16

METROPOLITAN COUNCIL

SOUTHWEST Green Line LRT Extension

CIVIL - VOLUME 4F
TH 100 LRT BRIDGE
BRIDGE 27303
WEST ABUTMENT REINFORCEMENT 3

DISCIPLINE: STRUCTURES
SHEET NAME: CBR27303-BRG-ABT-002-7

SHEET 11 OF 52

Dec, 11 2015 11:43 am V:\3400_ADC\CAD\SEGMENT E2\PLAN SHEETS\STRUCTURES\T100-LRT\CBR27303-BRG-ABT-002.dwg By: Katie.Ellis

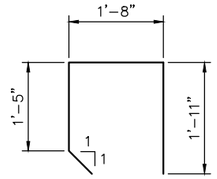

A504E

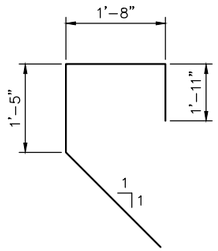

A505E

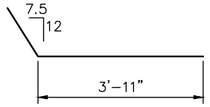

A510E

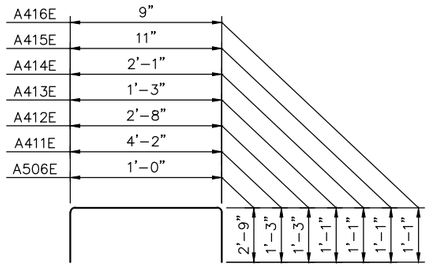

A506E, A411E, A412E, A413E, A414E, A415E, & A416E

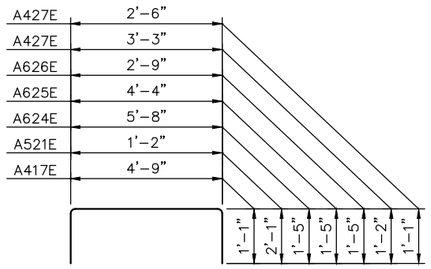

A417E, A521E, A624E, A625E, A626E, A427E & A428E

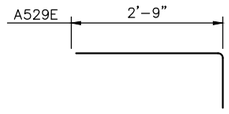

A529E

BILL OF REINFORCEMENT FOR WEST ABUTMENT

BAR	NO.	LENGTH	SHAPE	LOCATION
A601E	22	19'-11"	STR.	STEM, VERT. F.F.
A1002E	43	20'-0"	STR.	STEM, VERT. B.F.
A803E	20	9'-0"	STR.	BACKWALL, VERT. E.F.
A504E	29	5'-6"	BENT	BACKWALL, TIE
A505E	10	7'-4"	BENT	BACKWALL, TIE
A506E	39	6'-6"	BENT	BACKWALL, TIE
A607E	47	21'-4"	STR.	STEM,HORZ.B.F.
A508E	7	39'-2"	STR.	BACKWALL, HORZ. E.F.
A509E	6	9'-2"	STR.	BACKWALL, HORZ.
A510E	28	6'-0"	BENT	BACKWALL, HORZ.
A411E	26	6'-8"	BENT	BRIDGE SEAT, TIE
A412E	21	5'-2"	BENT	BRIDGE SEAT, TIE
A413E	5	3'-5"	BENT	BRIDGE SEAT, TIE
A414E	1	5'-3"	BENT	BRIDGE SEAT, TIE
A415E	1	3'-1"	BENT	BRIDGE SEAT, TIE
A416E	1	2'-11"	BENT	BRIDGE SEAT, TIE
A417E	1	6'-11"	BENT	BRIDGE SEAT, TIE
A518E	6	19'-11"	STR.	STEM VERT. @ WALL B.F.
A519E	34	5'-2"	STR.	WALL, DOWEL VERT.
A520E	34	5'-11"	STR.	WALL, VERT. E.F.
A521E	18	3'-6"	BENT	WALL, TIE
A522E	14	6'-8"	STR.	WALL, HORZ.
A523E	14	10'-1"	STR.	WALL, HORZ.
A624E	19	8'-6"	BENT	STEM, TIE
A625E	2	5'-7"	BENT	STEM, TIE
A626E	2	7'-2"	BENT	STEM, TIE
A427E	6	5'-7"	BENT	BRIDGE SEAT, TIE
A428E	1	5'-0"	BENT	BRIDGE SEAT, TIE
A529E	39	3'-7"	BENT	APPROACH BLOCK DOWEL

DRAFT-WORK IN PROCESS

NO.	DATE	BY	CHECK	DESIGN	REVISION / SUBMITTAL

DESIGNED BY: BAW | CHECKED BY: MDJ
DRAWN BY: LMT | CHECKED BY: MDJ

AECOM Kimley»Horn

90% SUBMISSION - 01/22/16

METROPOLITAN COUNCIL

SOUTHWEST Green Line LRT Extension

CIVIL - VOLUME 4F
TH 100 LRT BRIDGE
BRIDGE 27303
WEST ABUTMENT REINFORCEMENT 4

DISCIPLINE: STRUCTURES
SHEET NAME: CBR27303-BRG-ABT-002-8

SHEET 12 OF 52

Dec, 11 2015 11:43 am V:\3400_ADC\CAD\SEGMENT E2\PLAN SHEETS\STRUCTURES\T100-LRT\CBR27303-BRG-ABT-002.dwg By: Katie.Ellis

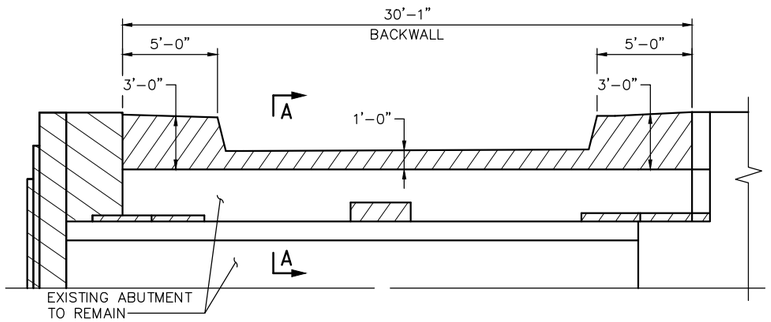

NORTH SIDE

REMOVAL ELEVATION

(WINGWALLS & SOUTH MASK WALL NOT SHOWN FOR CLARITY)

SOUTH SIDE

NOTE:
SEE SHEET 15 FOR
BRIDGE SEAT REMOVALS

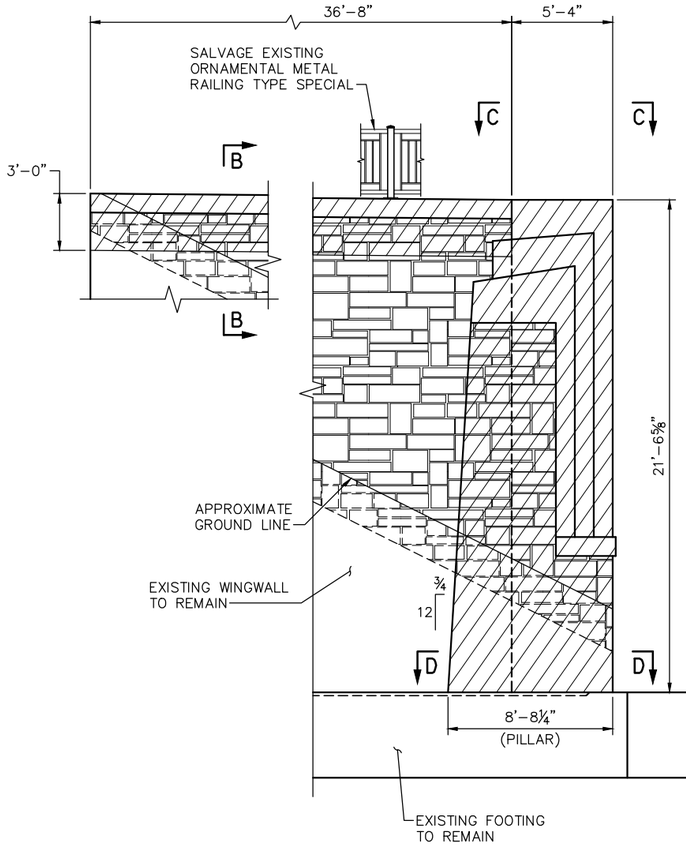

N.E. WINGWALL REMOVAL ELEVATION

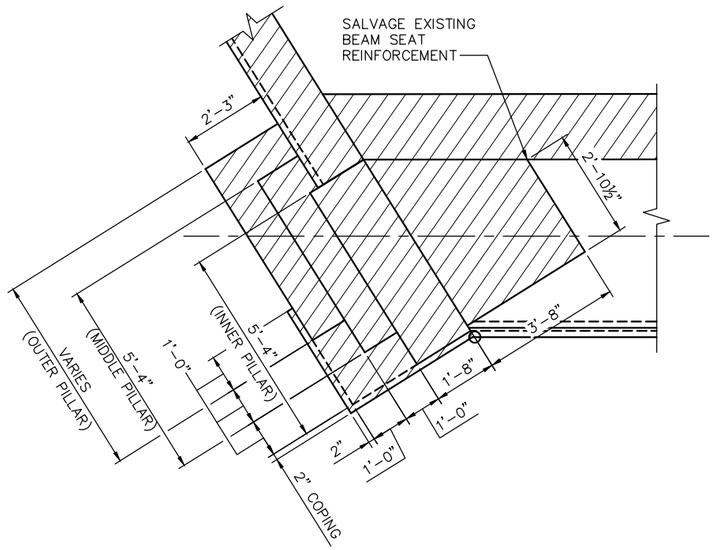

SECTION C–C

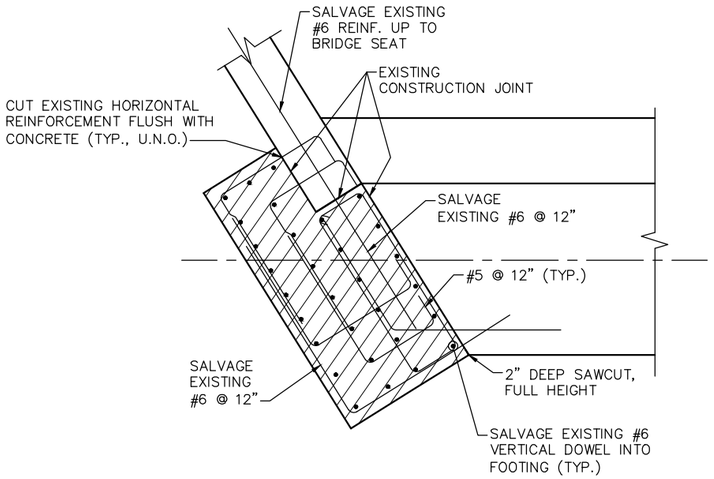

SECTION D–D

(REINFORCEMENT IS SHOWN FOR INFORMATION ONLY)

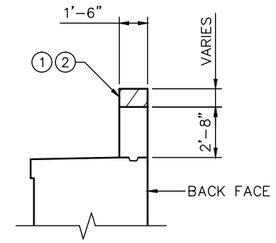

SECTION A–A

(SECTION THRU ABUTMENT)

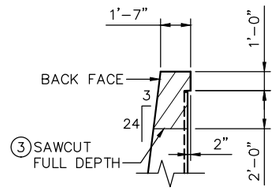

SECTION B–B

NOTES:

REMOVAL SHALL INCLUDE CONCRETE, REINFORCING STEEL, AND EMBEDS UNLESS NOTED OTHERWISE.

1. REMOVAL INCLUDES EXISTING BACKWALL PROTECTION ANGLES.
2. SALVAGE EXISTING #5 VERTICAL REINFORCEMENT @ 12" SPA.
3. COAT CUT ENDS OF REINFORCING STEEL WITH CORROSION INHIBITOR WITH AN EPOXY FROM THE MNDOT APPROVED/QUALIFIED PRODUCTS LIST FOR PRESTRESSED BEAMS – CUT STRAND SEALANT.

LEGEND

REMOVAL AREA

DRAFT-WORK IN PROCESS

NO.	DATE	BY	CHECK	DESIGN	REVISION / SUBMITTAL

DESIGNED BY: BAW | CHECKED BY: MDJ
DRAWN BY: LMT | CHECKED BY: MDJ

AECOM Kimley»Horn

90% SUBMISSION - 01/22/16

METROPOLITAN COUNCIL

SOUTHWEST Green Line LRT Extension

CIVIL - VOLUME 4F
TH 100 LRT BRIDGE
BRIDGE 27303
EAST ABUTMENT DETAILS 1

DISCIPLINE: STRUCTURES
SHEET NAME: CBR27303-BRG-ABT-003

SHEET 13 OF 52

Dec, 11 2015 11:43 am V:\3400_ADC\CAD\SEGMENT E2\PLAN SHEETS\STRUCTURES\T100-LRT\CBR27303-BRG-ABT-003.dwg By: Katie.Ellis

EAST ABUTMENT SPREAD FOOTING LOAD DATA	
* FACTORED DESIGN BEARING PRESSURE	3.6 TONS/ SQ FT
EFFECTIVE WIDTH B'	7.2 FT
FACTORED BEARING RESISTANCE φb qn	4.1 TONS/ SQ FT

* BASED ON STRENGTH I LOAD COMBINATION.

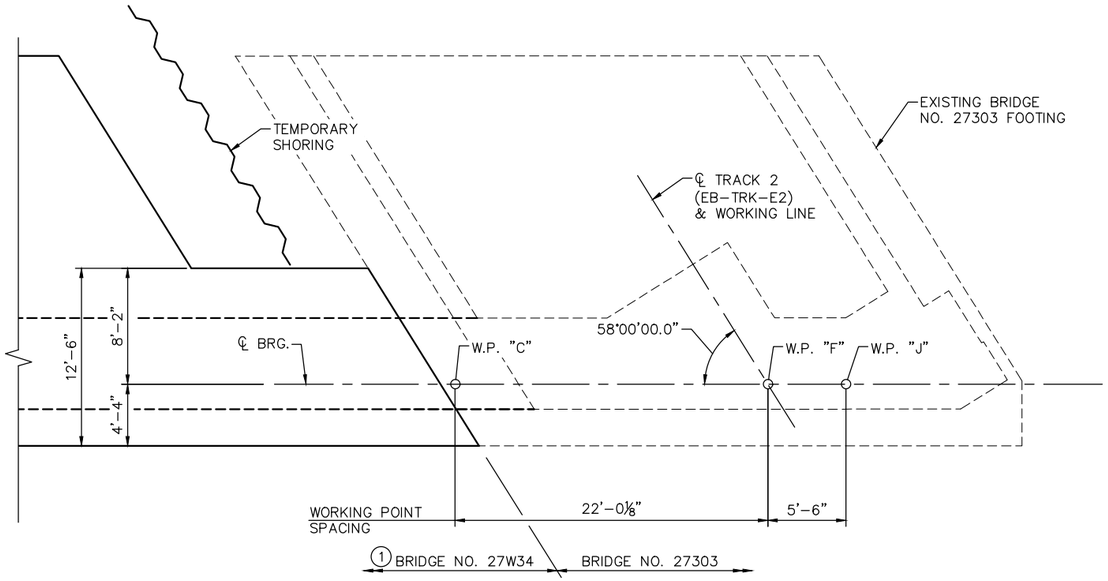

FOOTING PLAN ①

NOTES:

① FOOTING PLAN PROVIDED TO SHOW GENERAL FOOTING ORIENTATION. FOOTING CONCRETE AND REINFORCEMENT TO BE PROVIDED UNDER BRIDGE NO. 27W34.

DRAFT-WORK IN PROCESS

NO.	DATE	BY	CHECK	DESIGN	REVISION / SUBMITTAL

DESIGNED BY: BAW | CHECKED BY: MDJ
DRAWN BY: LMT | CHECKED BY: MDJ

AECOM Kimley»Horn

90% SUBMISSION - 01/22/16

METROPOLITAN COUNCIL

SOUTHWEST Green Line LRT Extension

CIVIL - VOLUME 4F
TH 100 LRT BRIDGE
BRIDGE 27303
EAST ABUTMENT DETAILS 2

DISCIPLINE: STRUCTURES

SHEET NAME: CBR27303-BRG-ABT-004-1

SHEET 14 OF 52

Dec, 11 2015 11:44 am V:\3400_ADC\CAD\SEGMENT E2\PLAN SHEETS\STRUCTURES\T100-LRT\CBR27303-BRG-ABT-004.dwg By: Katie.Ellis

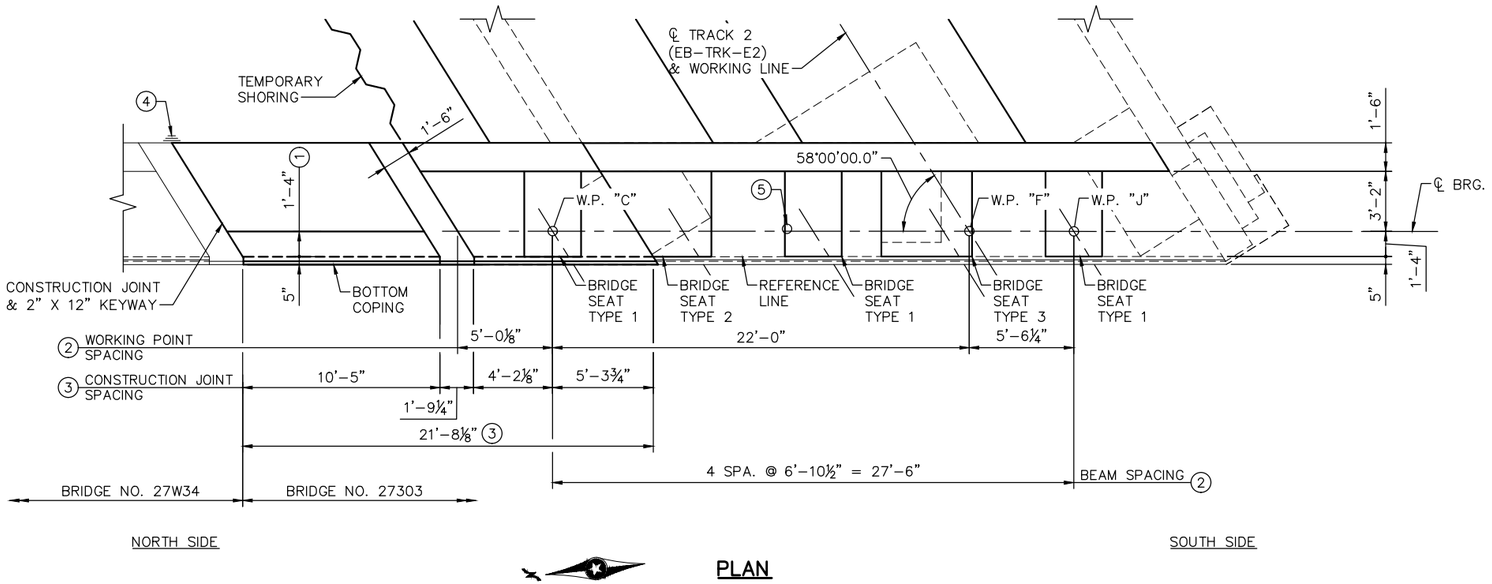

PLAN

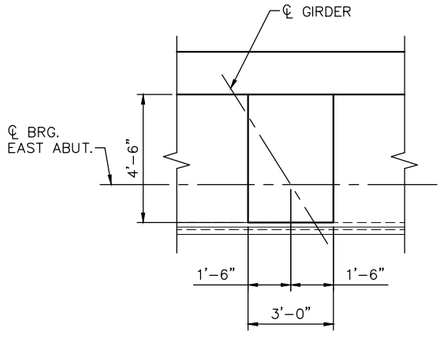

BRIDGE SEAT TYPE 1
(TYP. 3 LOCATIONS)

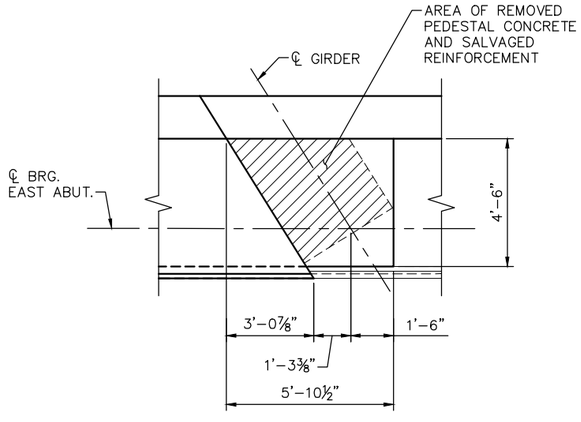

BRIDGE SEAT TYPE 2

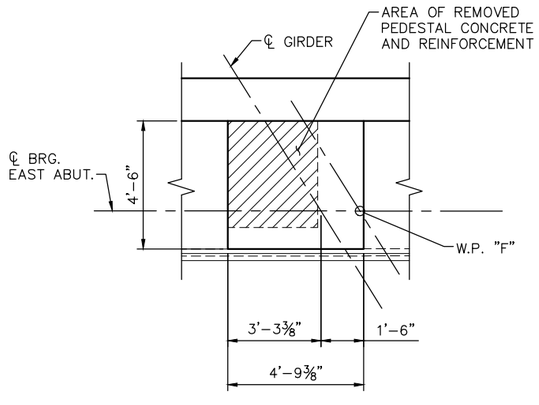

BRIDGE SEAT TYPE 3

NOTES:

A 72 HOUR DELAY IS REQUIRED BETWEEN ALL ADJACENT POURS OF WALLS AND STEMS.

DAMPROOFING SHALL BE APPLIED TO THE BACK FACE OF THE ABUTMENT, AND NORTHEAST WINGWALL FROM TOP OF FOOTING TO WITHIN 6" FROM TOP OF ABUTMENT/WINGWALL.

1. DIMENSIONS SHOWN AT TOP OF WALL.
2. MEASURED ALONG ℄ BEARING.
3. MEASURED ALONG REFERENCE LINE.
4. MEMBRANE WATERPROOFING SYSTEM PER MnDOT SPEC. 2481.3B.
5. EXISTING CONDUIT

DRAFT-WORK IN PROCESS

NO.	DATE	BY	CHECK	DESIGN	REVISION / SUBMITTAL

DESIGNED BY: BAW | CHECKED BY: MDJ
DRAWN BY: LMT | CHECKED BY: MDJ

AECOM Kimley»Horn

90% SUBMISSION - 01/22/16

METROPOLITAN COUNCIL

SOUTHWEST Green Line LRT Extension

CIVIL - VOLUME 4F
TH 100 LRT BRIDGE
BRIDGE 27303
EAST ABUTMENT DETAILS 3

SHEET 15 OF 52

DISCIPLINE: STRUCTURES
SHEET NAME: CBR27303-BRG-ABT-004-2

Dec, 11 2015 11:44 am V:\3400_ADC\CAD\SEGMENT E2\PLAN SHEETS\STRUCTURES\T100-LRT\CBR27303-BRG-ABT-004.dwg By: Katie.Ellis

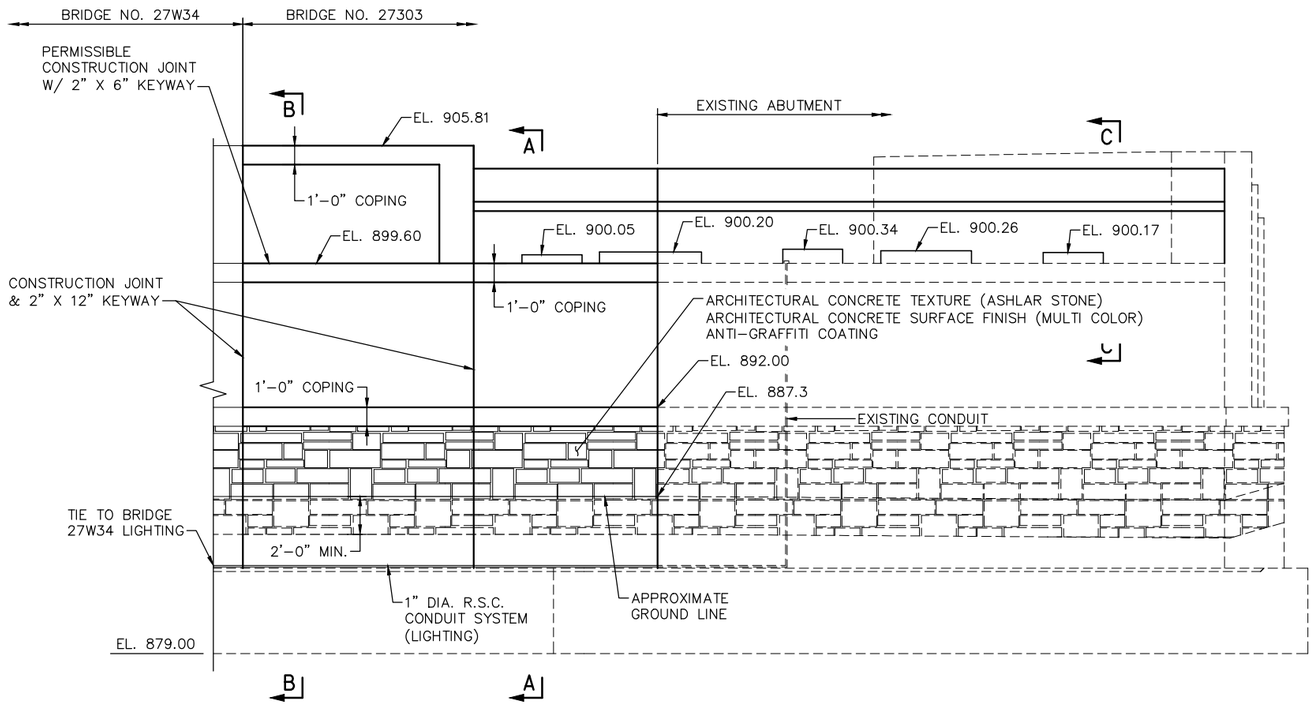

ELEVATION

NOTES:

FOR SECTIONS A-A, B-B AND C-C SEE SHEET 17.

DRAFT-WORK IN PROCESS

NO.	DATE	BY	CHECK	DESIGN	REVISION / SUBMITTAL

DESIGNED BY: BAW | CHECKED BY: MDJ
DRAWN BY: LMT | CHECKED BY: MDJ

AECOM Kimley»Horn

90% SUBMISSION - 01/22/16

METROPOLITAN COUNCIL

SOUTHWEST Green Line LRT Extension

CIVIL - VOLUME 4F
TH 100 LRT BRIDGE
BRIDGE 27303
EAST ABUTMENT DETAILS 4

DISCIPLINE: STRUCTURES
SHEET NAME: CBR27303-BRG-ABT-004-3

SHEET 16 OF 52

Dec, 11 2015 11:44 am v:\3400_ADC\CAD\SEGMENT E2\PLAN SHEETS\STRUCTURES\T100-LRT\CBR27303-BRG-ABT-004.dwg By: Katie.Ellis

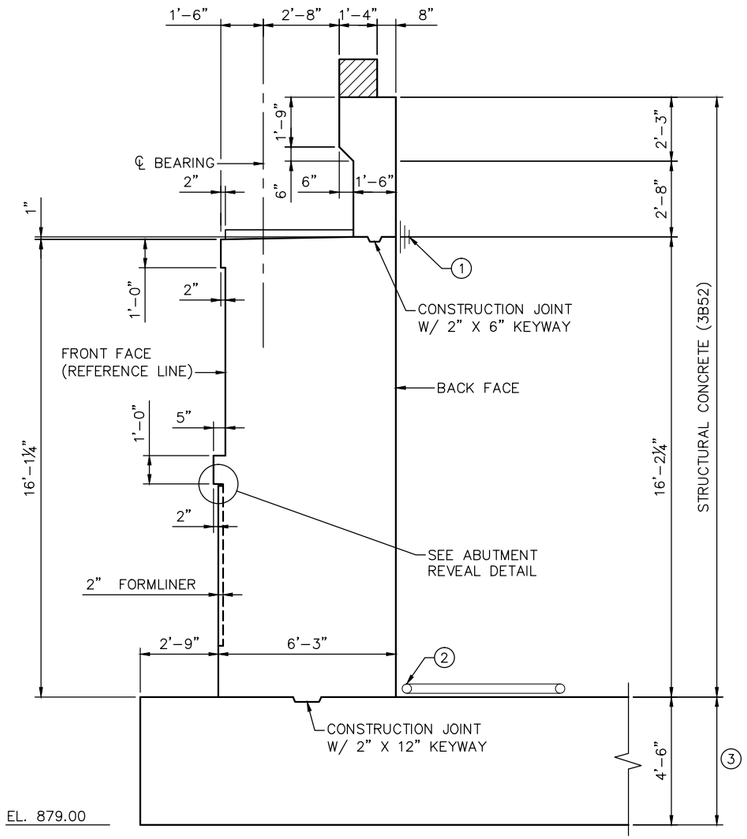

SECTION A–A
(SECTION THRU ABUTMENT)

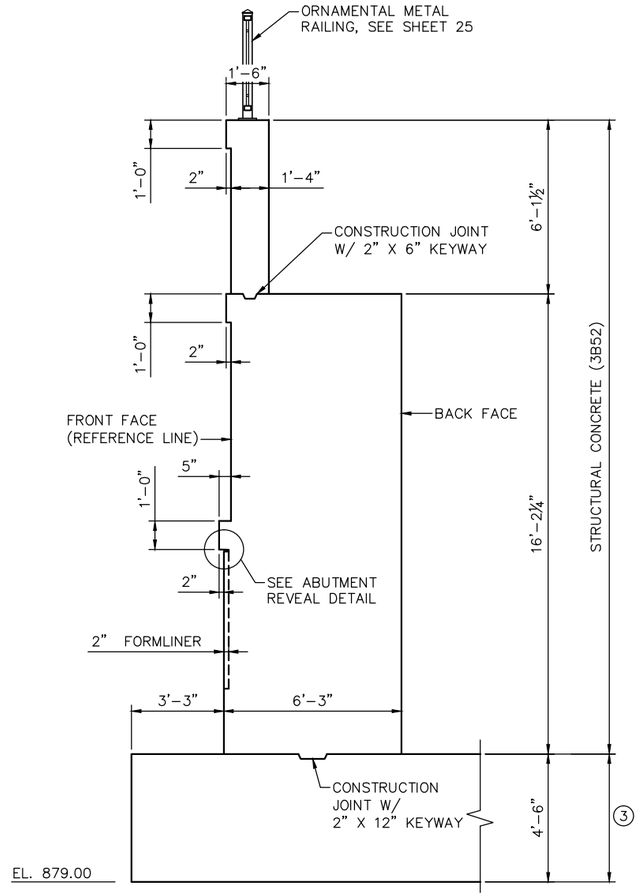

SECTION B–B
(SECTION THRU WALL)

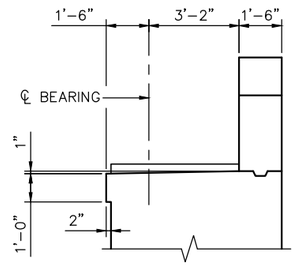

SECTION C–C
(SECTION THRU EXISTING ABUTMENT)

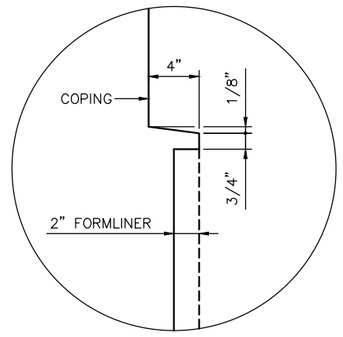

ABUTMENT REVEAL DETAIL

NOTES:

SEE SHEET 16 FOR LOCATION OF SECTION A–A, B–B, & C–C.

(1) MEMBRANE WATERPROOFING SYSTEM PER MnDOT SPEC. 2481.3.B.

(2) 4" NOMINAL DIA. PERFORATED PIPE, SEE DETAIL B910.

(3) FOOTING PROVIDED BY BRIDGE NO. 27W34.

DRAFT-WORK IN PROCESS

NO.	DATE	BY	CHECK	DESIGN	REVISION / SUBMITTAL

DESIGNED BY: BAW | CHECKED BY: MDJ
DRAWN BY: LMT | CHECKED BY: MDJ

AECOM Kimley»Horn

90% SUBMISSION - 01/22/16

METROPOLITAN COUNCIL

SOUTHWEST Green Line LRT Extension

CIVIL - VOLUME 4F
TH 100 LRT BRIDGE
BRIDGE 27303
EAST ABUTMENT DETAILS 5

DISCIPLINE: STRUCTURES
SHEET NAME: CBR27303-BRG-ABT-004-4

SHEET 17 OF 52

Dec, 11 2015 11:44 am V:\3400_ADC\CAD\SEGMENT E2\PLAN SHEETS\STRUCTURES\T100-LRT\CBR27303-BRG-ABT-004.dwg By: Katie.Ellis

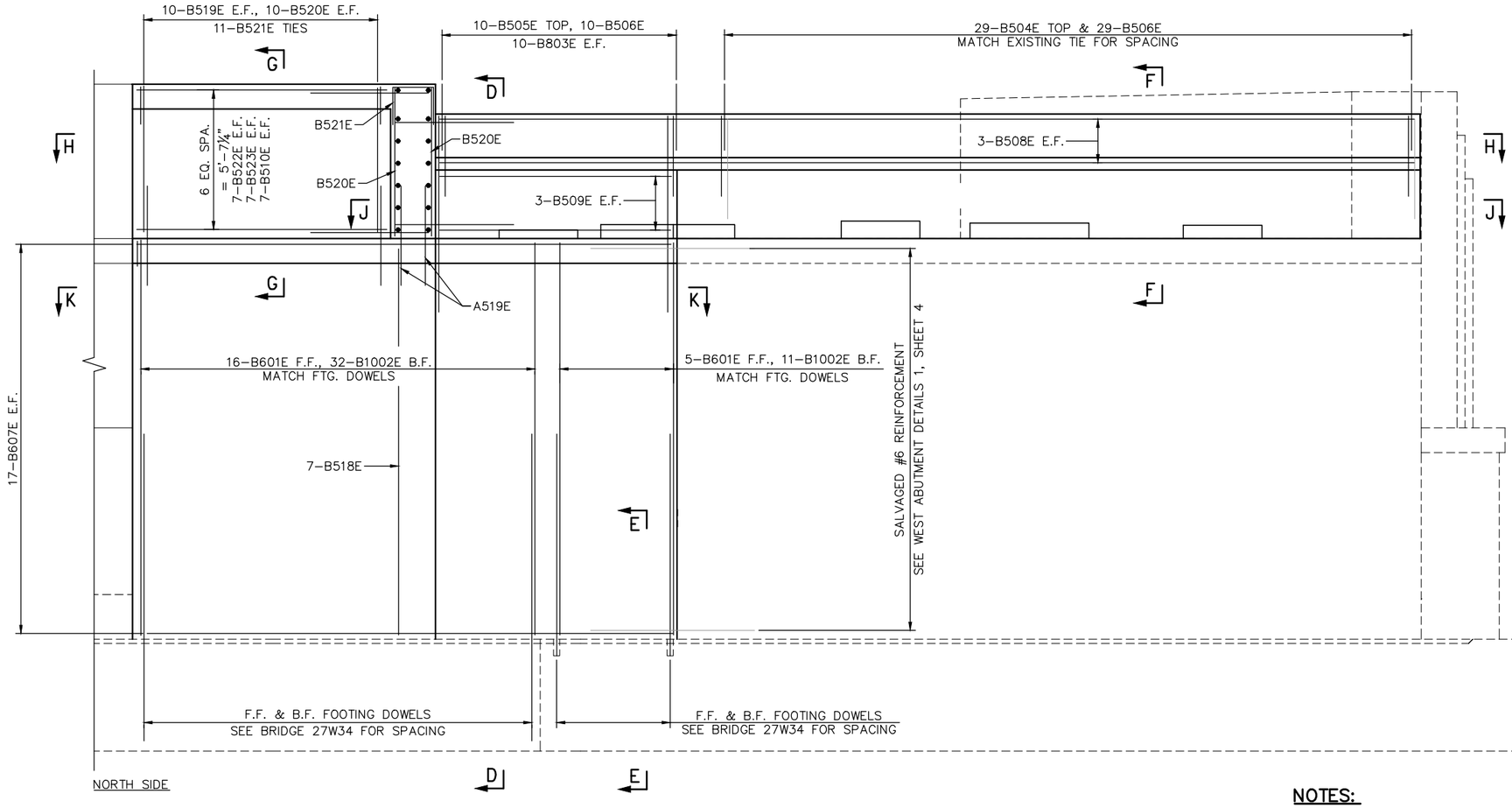

ELEVATION

NOTES:

F.F. DENOTES FRONT FACE.
B.F. DENOTES BACK FACE.
E.F. DENOTES EACH FACE.

(1) SEE BRIDGE 27W43 FOR FOOTING REINFORCEMENT.

DRAFT-WORK IN PROCESS

NO.	DATE	BY	CHECK	DESIGN	REVISION / SUBMITTAL

DESIGNED BY: BAW | CHECKED BY: MDJ
DRAWN BY: LMT | CHECKED BY: MDJ

AECOM Kimley»Horn

90% SUBMISSION - 01/22/16

METROPOLITAN COUNCIL

SOUTHWEST Green Line LRT Extension

CIVIL - VOLUME 4F
TH 100 LRT BRIDGE
BRIDGE 27303
EAST ABUTMENT REINFORCEMENT 1

DISCIPLINE: STRUCTURES
SHEET NAME: CBR27303-BRG-ABT-004-5

SHEET 18 OF 52

Dec, 11 2015 11:44 am V:\3400_ADC\CAD\SEGMENT E2\PLAN SHEETS\STRUCTURES\T100-LRT\CBR27303-BRG-ABT-004.dwg By: Katie.Ellis

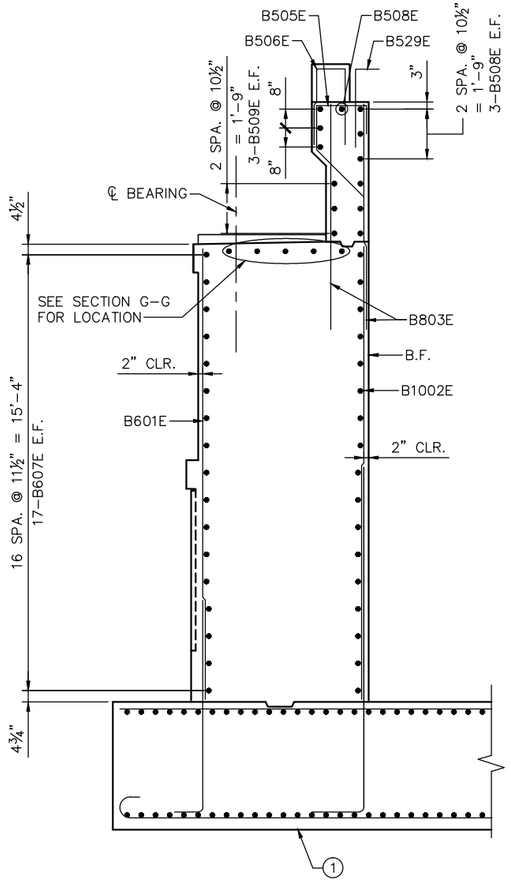

SECTION D–D
(SECTION THRU ABUTMENT)

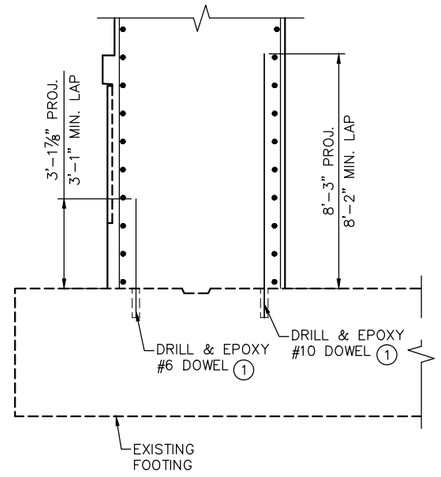

SECTION E–E
(SECTION THRU EXISTING FOOTING)

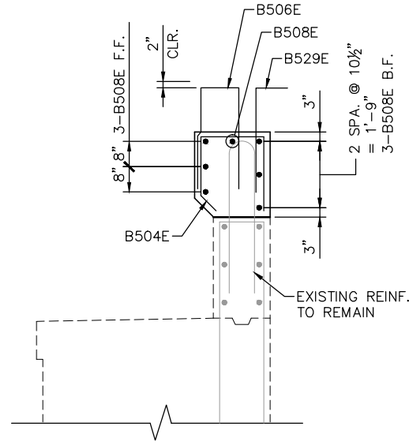

SECTION F–F
(SECTION THRU EXISTING ABUTMENT)

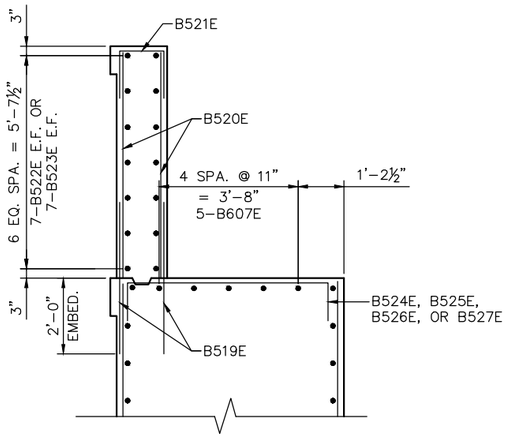

SECTION G–G
(SECTION THRU INFILL WALL)

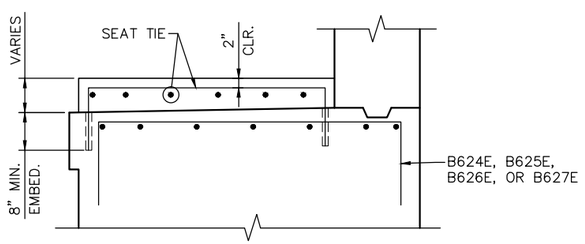

TYPICAL BRIDGE SEAT SECTION

NOTES:

F.F. DENOTES FRONT FACE.
B.F. DENOTES BACK FACE.
E.F. DENOTES EACH FACE.

SEE SHEET 18 FOR LOCATION OF SECTION D–D, E–E, F–F, & G–G.

(1) SEE BRIDGE 27W43 FOR FOOTING REINFORCEMENT.

DRAFT-WORK IN PROCESS

NO.	DATE	BY	CHECK	DESIGN	REVISION / SUBMITTAL

DESIGNED BY: BAW | CHECKED BY: MDJ
DRAWN BY: LMT | CHECKED BY: MDJ

AECOM Kimley»Horn

90% SUBMISSION - 01/22/16

METROPOLITAN COUNCIL

SOUTHWEST Green Line LRT Extension

CIVIL - VOLUME 4F
TH 100 LRT BRIDGE
BRIDGE 27303
EAST ABUTMENT REINFORCEMENT 2

DISCIPLINE: STRUCTURES
SHEET NAME: CBR27303-BRG-ABT-004-6

SHEET 19 OF 52

Dec, 11 2015 11:44 am V:\3400_ADC\CAD\SEGMENT E2\PLAN SHEETS\STRUCTURES\T100-LRT\CBR27303-BRG-ABT-004.dwg By: Katie.Ellis

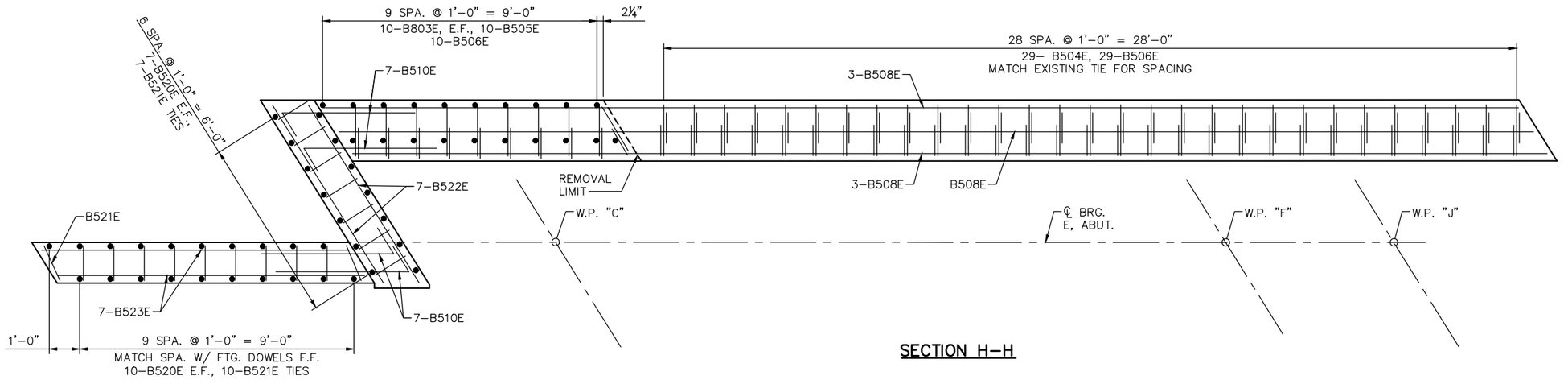

SECTION H-H

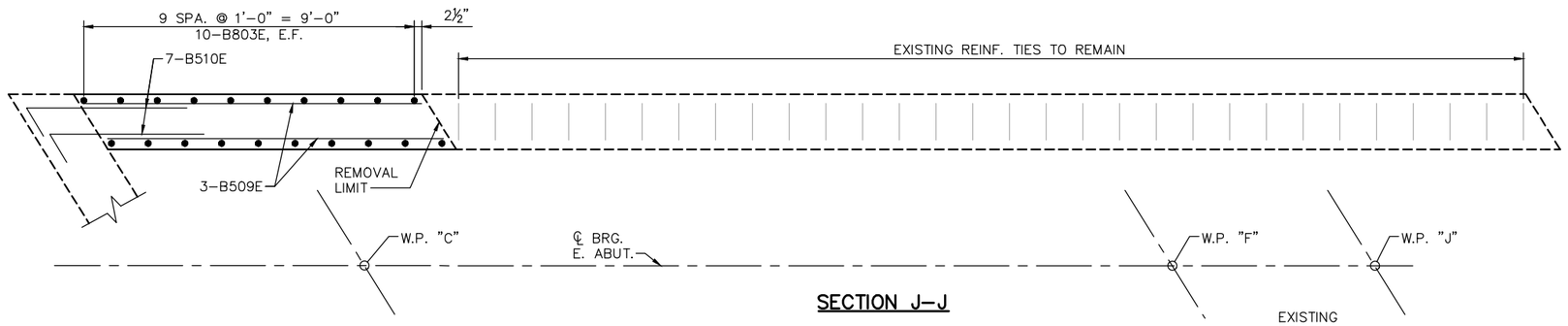

SECTION J-J

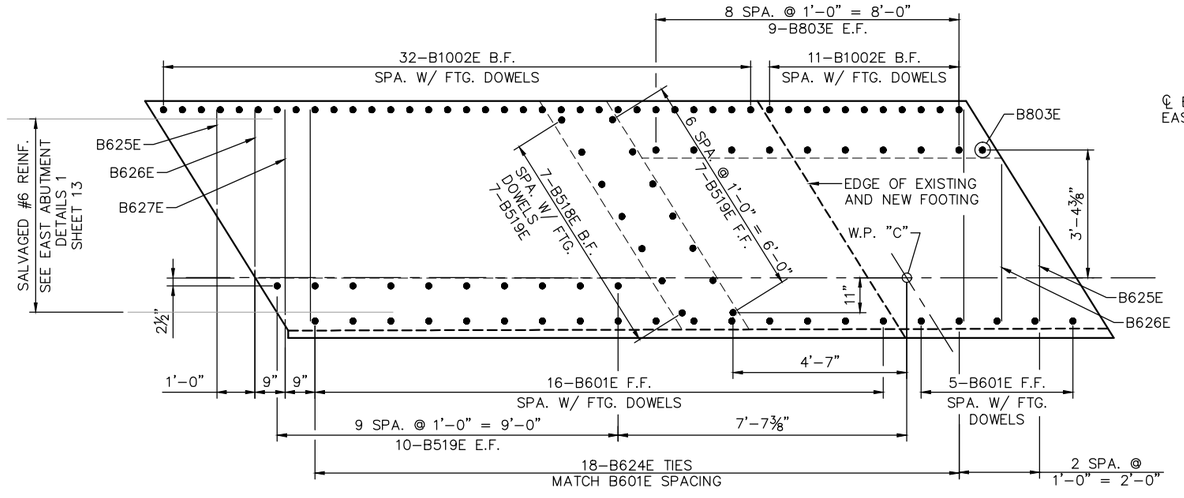

SECTION K-K

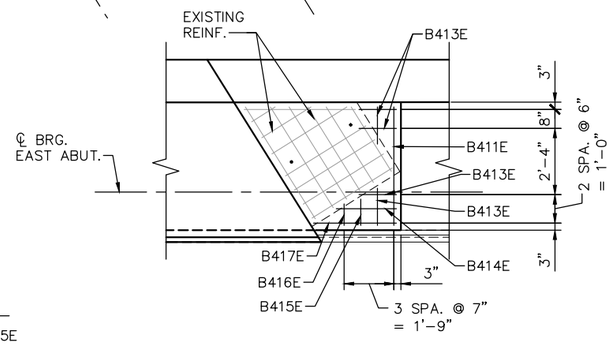

BRIDGE SEAT TYPE 2

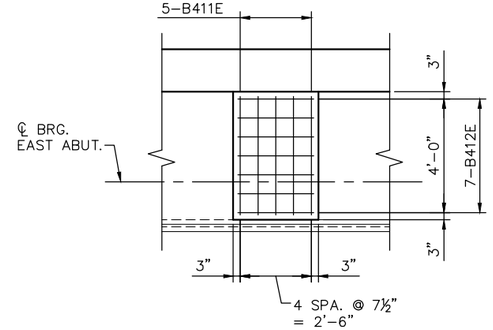

BRIDGE SEAT TYPE 1

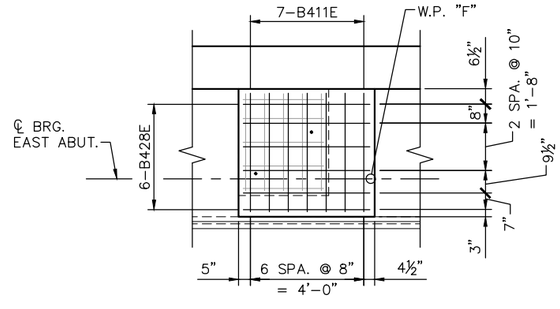

BRIDGE SEAT TYPE 3

NOTES:

DRILL & EPOXY (8" EMBED.) ALL BRIDGE SEAT TIES B411E THRU B417E, B427E AND B428E. SEE TYPICAL BRIDGE SEAT SECTION, SHEET 15.

F.F. DONOTES FRONT FACE.
B.F. DENOTES BACK FACE.
E.F. DENOTES EACH FACE.

SEE SHEET 18 FOR LOCATION OF SECTION H-H, J-J, & K-K.

DRAFT-WORK IN PROCESS

NO.	DATE	BY	CHECK	DESIGN	REVISION / SUBMITTAL

DESIGNED BY: BAW | CHECKED BY: MDJ
DRAWN BY: LMT | CHECKED BY: MDJ

AECOM Kimley»Horn

90% SUBMISSION - 01/22/16

METROPOLITAN COUNCIL

SOUTHWEST Green Line LRT Extension

CIVIL - VOLUME 4F
TH 100 LRT BRIDGE
BRIDGE 27303
EAST ABUTMENT REINFORCEMENT 3

DISCIPLINE: STRUCTURES
SHEET NAME: CBR27303-BRG-ABT-004-7

SHEET 20 OF 52

Dec, 11 2015 11:44 am V:\3400_ADC\CAD\SEGMENT E2\PLAN SHEETS\STRUCTURES\T100-LRT\CBR27303-BRG-ABT-004.dwg By: Katie.Ellis

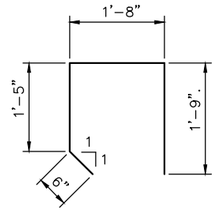

B504E

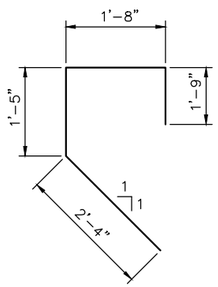

B505E

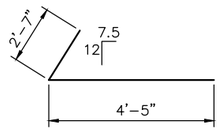

B510E

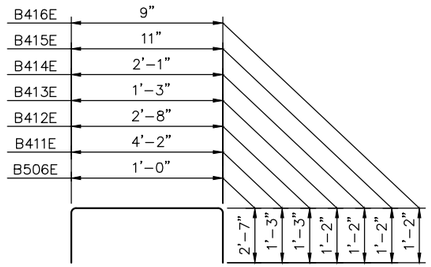

B506E, B411E, B412E, B413E,
B414E, B415E, & B416E

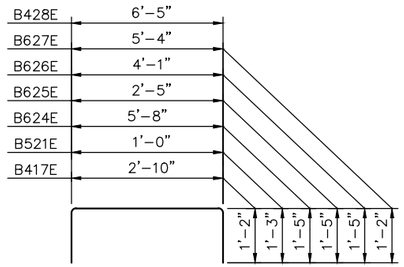

B417E, B521E, B624E, B625E,
B626E, B627E& B428E

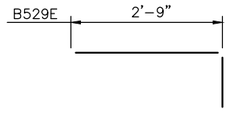

B529E

BILL OF REINFORCEMENT FOR EAST ABUTMENT				
BAR	NO.	LENGTH	SHAPE	LOCATION
B601E	21	15'-9"	STR.	STEM, VERT. F.F.
B1002E	43	15'-10"	STR.	STEM, VERT. B.F.
B803E	20	8'-2"	STR.	BACKWALL, VERT. E.F.
B504E	29	5'-4"	STR.	BACKWALL, TIE
B505E	10	7'-2"	BENT	BACKWALL, TIE
B506E	39	6'-5"	BENT	BACKWALL, TIE
B607E	39	21'-4"	STR.	STEM,HORZ.B.F.
B508E	6	30'-2"	STR.	BACKWALL, HORZ.
B509E	6	9'-1"	STR.	BACKWALL, HORZ.
B510E	28	7'-0"	BENT	BACKWALL, HORZ.
B411E	23	6'-8"	BENT	BRIDGE SEAT, TIE
B412E	15	5'-2"	BENT	BRIDGE SEAT, TIE
B413E	5	3'-7"	BENT	BRIDGE SEAT, TIE
B414E	1	4'-5"	BENT	BRIDGE SEAT, TIE
B415E	1	3'-3"	BENT	BRIDGE SEAT, TIE
B416E	1	3'-1"	BENT	BRIDGE SEAT, TIE
B417E	1	5'-2"	BENT	BRIDGE SEAT, TIE
B518E	7	15'-9"	STR.	STEM VERT. @ WALL B.F.
B519E	35	4'-7"	STR.	WALL, DOWEL VERT.
B520E	34	6'-0"	STR.	WALL, VERT. E.F.
B521E	17	3'-6"	BENT	WALL, TIE
B522E	14	7'-2"	STR.	WALL, HORZ.
B523E	14	10'-1"	STR.	WALL, HORZ.
B624E	19	8'-6"	BENT	STEM, TIE
B625E	2	5'-3"	BENT	STEM, TIE
B626E	2	6'-6"	BENT	STEM, TIE
B627E	1	7'-2"	BENT	STEM, TIE
B428E	6	8'-9"	BENT	BRIDGE SEAT, TIE
B529E	39	3'-7"	BENT	APPROACH BLOCK DOWEL

DRAFT-WORK IN PROCESS

NO.	DATE	BY	CHECK	DESIGN	REVISION / SUBMITTAL

DESIGNED BY: BAW | CHECKED BY: MDJ
DRAWN BY: LMT | CHECKED BY: MDJ

AECOM Kimley»Horn

90% SUBMISSION - 01/22/16

METROPOLITAN COUNCIL

SOUTHWEST Green Line LRT Extension

CIVIL - VOLUME 4F
TH 100 LRT BRIDGE
BRIDGE 27303
EAST ABUTMENT REINFORCEMENT 4

DISCIPLINE: STRUCTURES

SHEET NAME: CBR27303-BRG-ABT-004-8

SHEET 21 OF 52

Dec, 11 2015 11:45 am V:\3400_ADC\CAD\SEGMENT E2\PLAN SHEETS\STRUCTURES\T100-LRT\CBR27303-BRG-ABT-004.dwg By: Katie.Ellis

PIER SPREAD FOOTING LOAD DATA	
* FACTORED DESIGN BEARING PRESSURE	2.5 TONS/ SQ FT
EFFECTIVE WIDTH B' (PERPENDICULAR TO PIER)	19.0 FT
EFFECTIVE WIDTH L' (PARALLEL TO PIER)	49.0 FT
FACTORED BEARING RESISTANCE $\phi b \cdot qn$	6.3 TONS/ SQ FT

* BASED ON STRENGTH I LOAD COMBINATION.
** ANALYSIS BASED ON EXISTING 20' WIDE BY 51'-6" PIER FOOTING

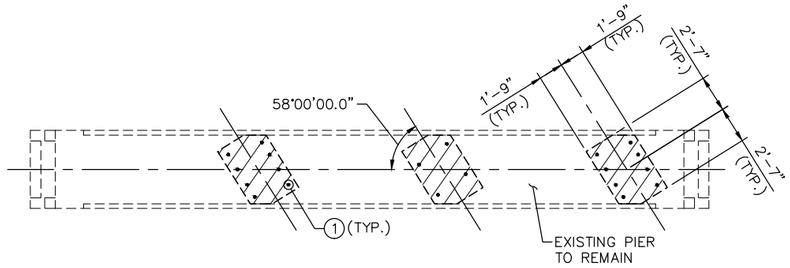

REMOVAL PLAN (4)

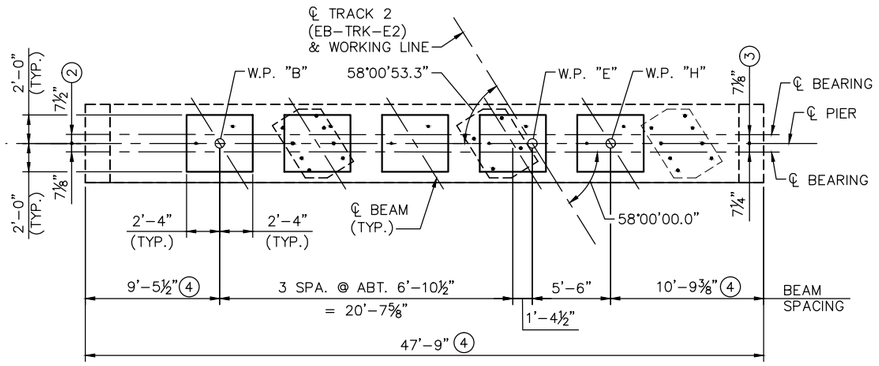

PLAN

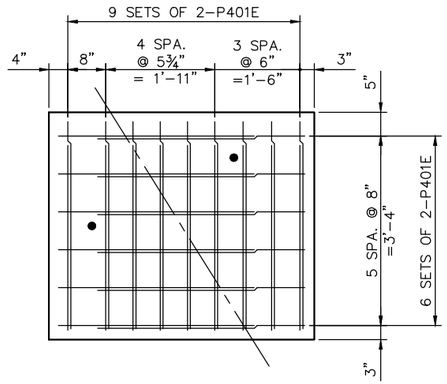

PEDESTAL DETAIL

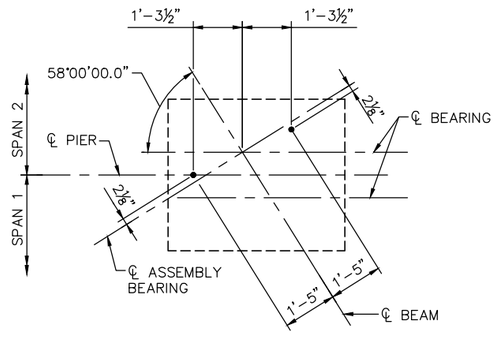

ANCHOR BOLT LAYOUT

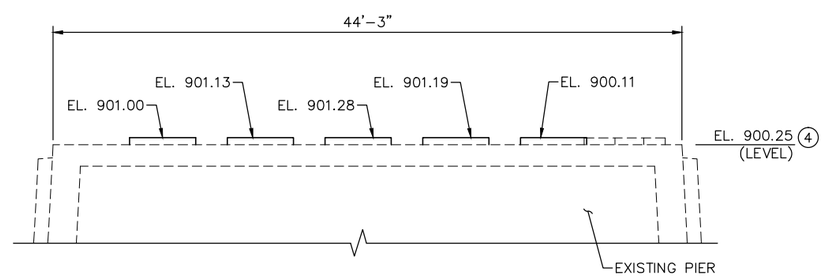

PARTIAL ELEVATION

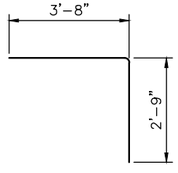

P401E

NOTES:

DRILL AND EPOXY P401E BARS INTO EXISTING PIER WALL. HOLES FOR P401E INTO PIER WALL MAY ENCOUNTER #5 TRANSVERSE TOP TIES. CONTRACTOR TO MAKE PROVISIONS TO DRILL THROUGH #5 BARS TO PLACE P401E AS REQUIRED.

HOLES FOR ANCHOR ROD MAY ENCOUNTER #5 TRANSVERSE TOP TIES. CONTRACTOR TO MAKE PROVISIONS TO DRILL THROUGH #5 BARS TO PLACE P401E AS REQUIRED.

(1) CUT ANCHOR BOLTS FLUSH WITH CONCRETE SURFACE AND COAT WITH ANY EPOXY FROM THE MNDOT APPROVED/QUALIFIED PRODUCTS LIST FOR PRESTRESSED BEAMS – CUT STRAND SEALANT. TYPICAL 20 LOCATIONS.

(2) MEASURED AT W.P. "B"

(3) MEASURED AT W.P. "H"

(4) DIMENSIONS BASED ON EXISTING BRIDGE NO. 27303 PLANS. CONTRACTOR TO FIELD VERIFY PRIOR TO CONSTRUCTION. ANY DISCREPANCIES SHALL BE COMMUNICATED TO THE ENGINEER.

LEGEND

REMOVE EXISTING BEAM SEAT CONCRETE AND REINFORCING STEEL. CUT REINFORCING STEEL FLUSH WITH FINISHED CONCRETE AND COAT WITH CORROSION INHIBITOR.

NO.	DATE	BY	CHECK	DESIGN	REVISION / SUBMITTAL

DESIGNED BY: KAE | CHECKED BY: MDJ
DRAWN BY: LMT | CHECKED BY: MDJ

AECOM Kimley»Horn

90% SUBMISSION - 01/22/16

METROPOLITAN COUNCIL

SOUTHWEST Green Line LRT Extension

CIVIL - VOLUME 4F
TH 100 LRT BRIDGE
BRIDGE 27303
PIER DETAILS

DISCIPLINE: STRUCTURES
SHEET NAME: CBR27303-BRG-PIR-001

SHEET 22 OF 52

Dec, 11 2015 04:30 pm V:\3400_ADC\CAD\SEGMENT E2\PLAN SHEETS\STRUCTURES\T100-LRT\CBR27303-BRG-PIR-001.dwg By: Katie.Ellis

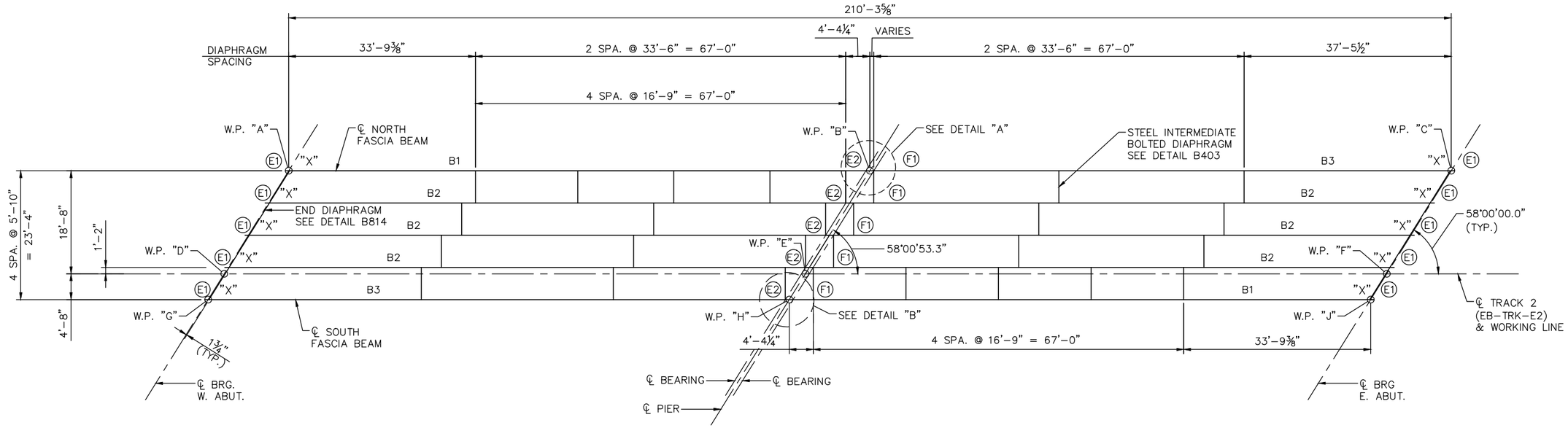

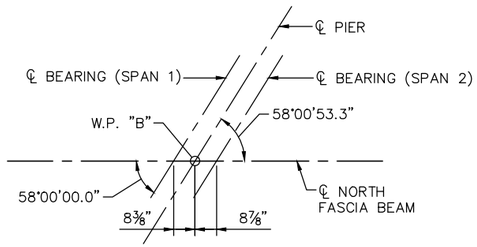

DETAIL "A"

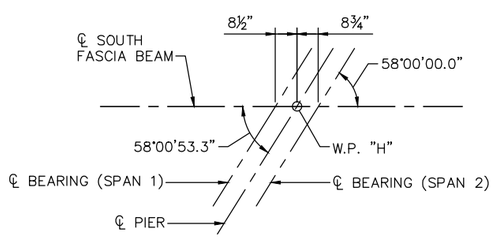

DETAIL "B"



FRAMING PLAN

NOTES:

SEE SHEET NO. 24 FOR PRECAST BEAM

(E1) DENOTES EXPANSION CURVED PLATE BEARING ASSEMBLY TYPE 1. SEE DETAIL B311.

(E2) DENOTES EXPANSION CURVED PLATE BEARING ASSEMBLY TYPE 2. SEE DETAIL B311.

(F1) DENOTES FIXED CURVED PLATE ASSEMBLY TYPE 1. SEE DETAIL B310.

"X" INDICATES END OF BEAM.

DRAFT-WORK IN PROCESS

NO.	DATE	BY	CHECK	DESIGN	REVISION / SUBMITTAL

DESIGNED BY: KAE | CHECKED BY: MDJ
DRAWN BY: LMT | CHECKED BY: MDJ

AECOM Kimley»Horn

90% SUBMISSION - 01/22/16

METROPOLITAN COUNCIL

SOUTHWEST Green Line LRT Extension

CIVIL - VOLUME 4F
TH 100 LRT BRIDGE
BRIDGE 27303
FRAMING PLAN

DISCIPLINE: STRUCTURES
SHEET NAME: CBR27303-BRG-SUP-002

SHEET 23 OF 52

Dec, 11 2015 11:45 am v:\3400_ADC\CAD\SEGMENT E2\PLAN SHEETS\STRUCTURES\T100-LRT\CBR27303-BRG-SUP-002.dwg By: Katie.Ellis

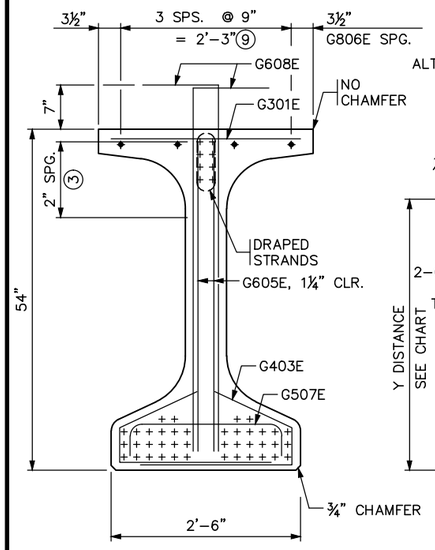

END VIEW

CUT STRANDS FLUSH WITH CONCRETE. COVER ENDS WITH ONE COMPONENT POLYURETHANE SEALANT PER APPROVED PRODUCT LIST. (G609E BAR NOT SHOWN)

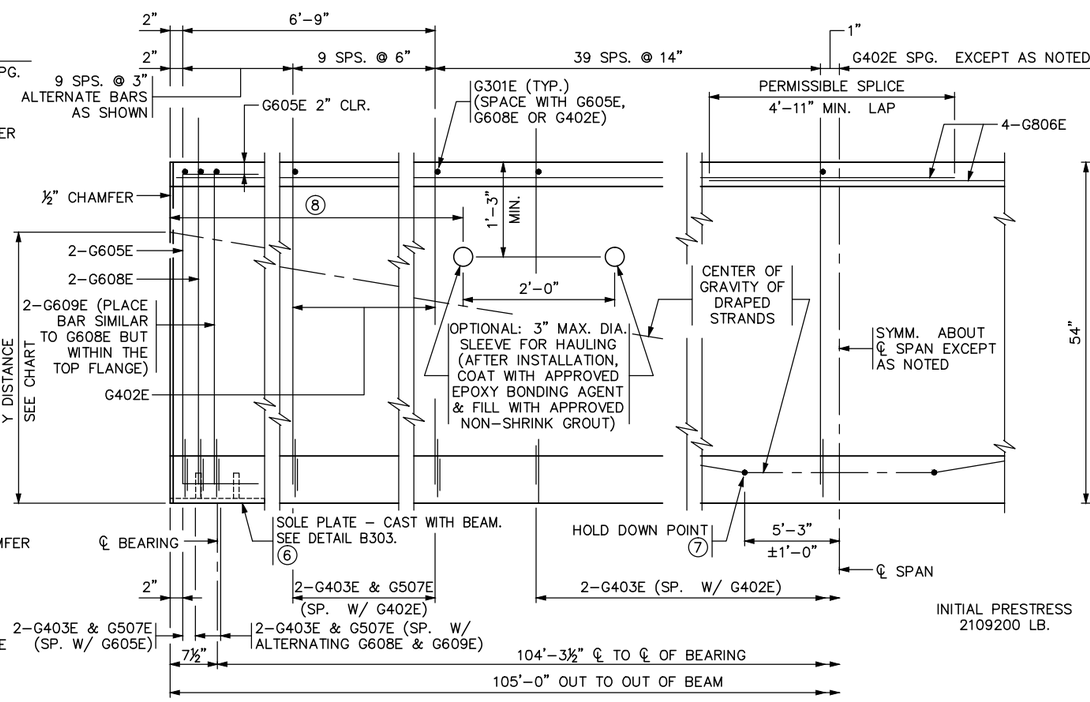

BEAM ELEVATION

INITIAL PRESTRESS 2109200 LB.

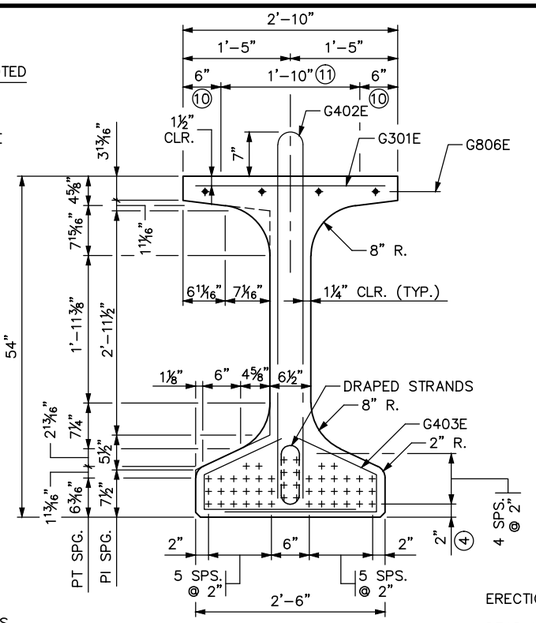

SECTION AT ℄ SPAN

Y DISTANCES (INCHES)	NO.	℄ SPAN	END
STRAIGHT STRANDS	40	4.4	
DRAPED STRANDS	8	6.0	48.0 ▫
TOTAL STRANDS	48	4.67	

Y = DISTANCE TO CENTER OF GRAVITY OF STRANDS FROM BOTTOM OF BEAM. ALL STRANDS SPACED 2" CENTER TO CENTER, HORIZONTALLY AND VERTICALLY, EXCEPT AS NOTED.

▫ A TOLERANCE OF ±1" WILL BE PERMITTED IN THIS DIMENSION.

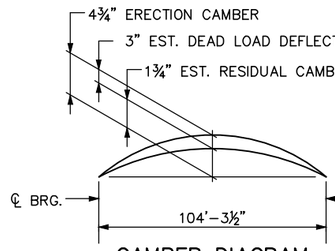

CAMBER DIAGRAM

ERECTION CAMBER SHOWN IS AFTER DIAPHRAGMS ARE IN PLACE.

DEAD LOAD DEFLECTION SHOWN IS FOR WEIGHT OF SLAB, WEARING COURSE, BARRIER, SIDEWALK AND MEDIAN WHERE APPLICABLE.

CONTRACTOR WILL TAKE ELEVATIONS AT TOP OF BEAMS AFTER ERECTION AND WILL ALLOW FOR DEFLECTION SHOWN TO ENABLE BUILDING FORMS TO CORRECT GRADE AND SPECIFIED SLAB THICKNESS. PROVIDE COPY OF ELEVATIONS TO THE ENGINEER.

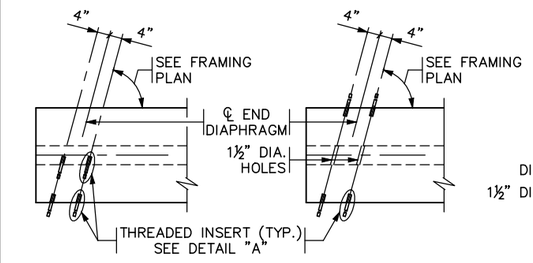

PLAN AT FASCIA BEAMS

PLAN AT INTERIOR BEAMS

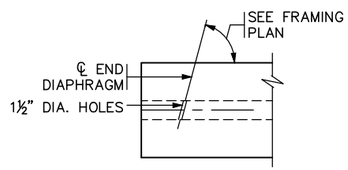

PLAN

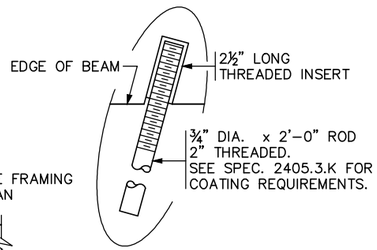

DETAIL "A"

CALCULATED PRESTRESS LOSSES	
ELASTIC SHORTENING LOSS	26.09 KSI
LONG TERM LOSSES	25.32 KSI
TOTAL LOSSES	51.40 KSI

MINIMUM CONCRETE STRENGTH - K.S.I.	
① f'ci	② f'c
7.5 KSI	8.0 KSI

PRESTRESSING STRAND DIAMETER	
⑤	½" ☐
⑤	0.60" ☒

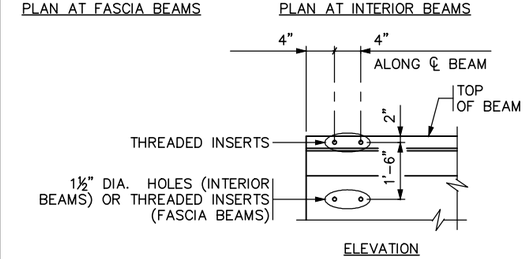

ELEVATION

CONCRETE END DIAPHRAGM

PARAPET ABUTMENT
(SEE DETAIL B814 FOR DIAPHRAGM DETAILS)

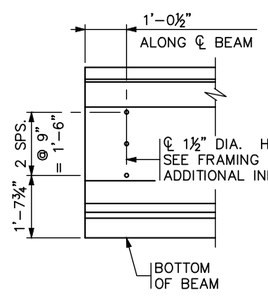

ELEVATION

CONCRETE END DIAPHRAGM

SEE SUPERSTRUCTURE DETAILS AND REINFORCEMENT FOR DIAPHRAGM DETAILS.

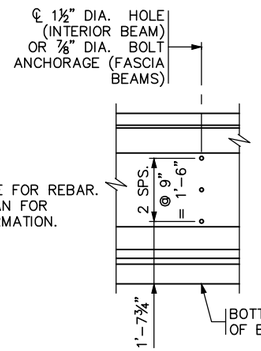

ELEVATION

STEEL INTERMEDIATE DIAPHRAGM

(SEE DETAIL B403 FOR DIAPHRAGM DETAILS)

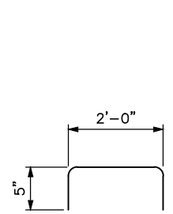

G507E

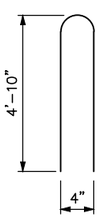

G402E

G301E

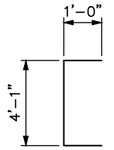

G605E

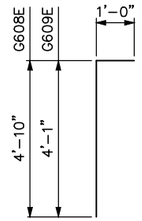

G608E & G609E

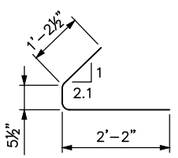

G403E

GENERAL NOTES

PROVIDE HANDLING HOOKS OR DEVICES AS REQUIRED BY CONTRACTOR.

MARK EACH BEAM SHOWING BRIDGE NUMBER, CASTING DATE, AND INDIVIDUAL IDENTIFICATION LETTERS AND NUMBERS ON THE FACE OF THE BEAM, NEAR THE END, SO LOCATED THAT THEY WILL BE EXPOSED AFTER THE END DIAPHRAGMS HAVE BEEN CAST. MARK FASCIA BEAMS ON THE INSIDE FACE. ENSURE ALL MARKINGS ARE STENCILLED AND CLEARLY LEGIBLE. FOR LOCATION OF BEAMS, SEE FRAMING PLAN.

~~ALL MATERIAL AND WORK SHOWN OR NOTED ON THIS SHEET IS INCLUDED IN UNIT PRICE BID FOR PRESTRESSED CONCRETE BEAMS. SEE SPEC. 2405.~~

SEE FRAMING PLAN FOR BEAM END MARKED "X" AND DIAPHRAGM SPACING.

APPROXIMATE WEIGHT OF BEAM IS 42 TONS.

AS AN ALTERNATE TO THE END DIAPHRAGM ANCHORAGES SHOWN, THE CONTRACTOR MAY SUBMIT DETAILS OF A CAST-IN-PLACE ANCHORAGE TO THE ENGINEER FOR APPROVAL. ANCHORAGE MUST PROVIDE AN ULTIMATE PULL OUT STRENGTH OF 15 KIPS PER ANCHORAGE.

APPLY AN APPROVED SEALER TO THE SIDES OF THE BEAM NEAR EACH END PER THE SPECIAL PROVISIONS.

① MINIMUM CONCRETE STRENGTH AT TIME OF PRESTRESS TRANSFER.

② MINIMUM CONCRETE STRENGTH WHEN BEAM CAN BE TRANSPORTED AND INSTALLED.

③ DRAPED STRANDS.

④ STRAIGHT STRANDS.

⑤ USE 7-WIRE LOW RELAXATION PRESTRESSING STRAND, CONFORMING TO ASTM A416, GRADE 270.

⑥ FOR INTEGRAL ABUTMENT, SOLE PLATE CAN BE ELIMINATED OR REPLACED WITH AN APPROVED PROTECTION PLATE. BEAMS DETAILED TO INCLUDE A TAPERED PLATE PER STANDARD FIGURE B309 MUST INCLUDE SOLE PLATE.

⑦ CENTER OF GRAVITY OF HOLD DOWNS WHEN MULTIPLE HOLD DOWNS ARE USED.

⑧ DIMENSION DETERMINED BY CONTRACTOR. MAINTAIN 2" MINIMUM CLEAR FROM STRANDS.

⑨ TWO INSIDE BARS MAY BE PLACED ADJACENT TO VERTICAL STIRRUP FOR TYING CONVENIENCE.

⑩ STEEL TROWEL TO SMOOTH FINISH AND APPLY BOND BREAKER PER APPROVED PRODUCTS LIST.

⑪ ROUGH FLOAT AND BROOM TRANSVERSELY FOR BOND PER SPEC. 2405.3.D.

DRAFT-WORK IN PROCESS

REVISED:

APPROVED: JANUARY 13, 2015
Nancy Dorbenberger
STATE BRIDGE ENGINEER

CERTIFIED BY _____ 1/22/16
LICENSED PROFESSIONAL ENGINEER — DATE
NAME: MATTHEW D. JENSEN LIC. NO. 44587

TITLE: MN54" PRESTRESSED CONCRETE BEAM (PRETENSIONED) MN54-105

BEAMS B1-B3

FIG. 5-397.508

DES: KAE	DR: LMT	APPROVED:	BRIDGE NO. 27303
CHK: MDJ	CHK: MDJ		

SHEET NO. 24 OF 52 SHEETS

Dec. 11 2015 11:46 am V:\3400_ADC\CAD\SEGMENT E2\PLAN SHEETS\STRUCTURES\T100-LRT\CBR27303-BRG-PCB-001.dwg By: Katie.Ellis

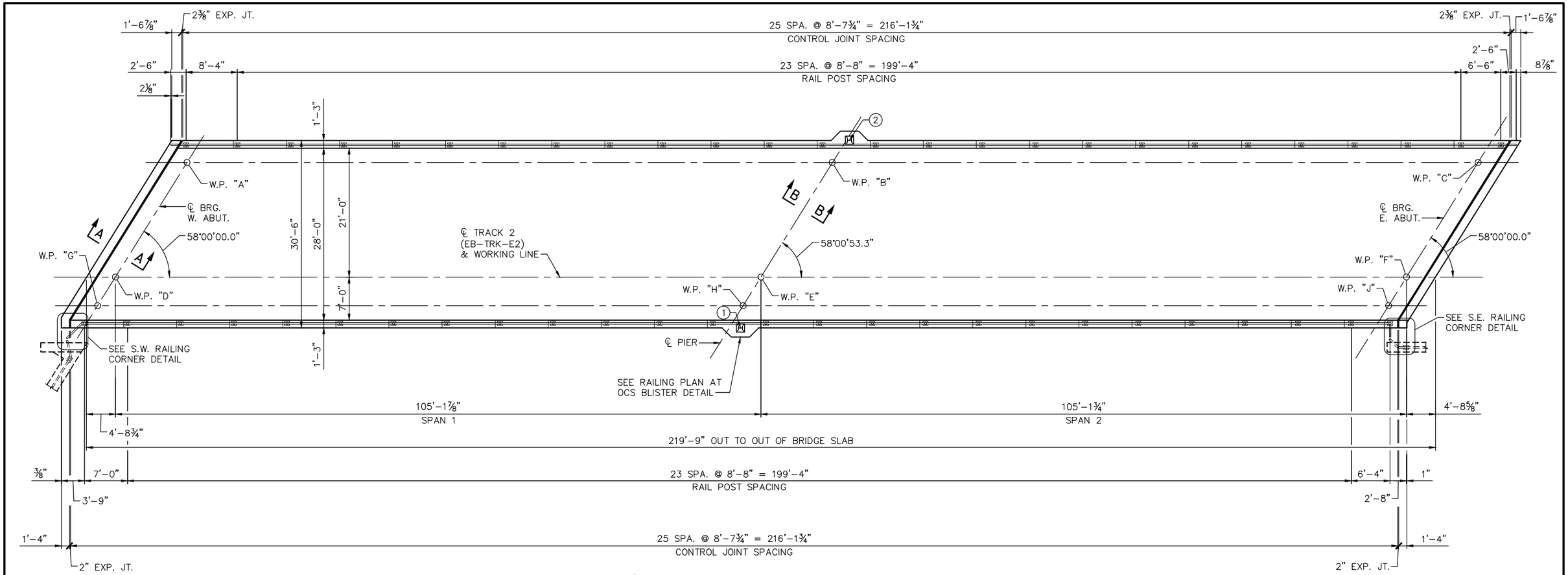

DECK PLAN

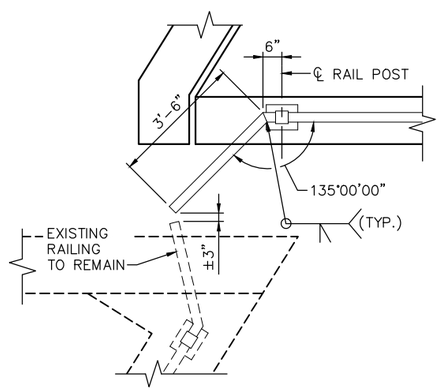

S.W. RAILING CORNER DETAIL

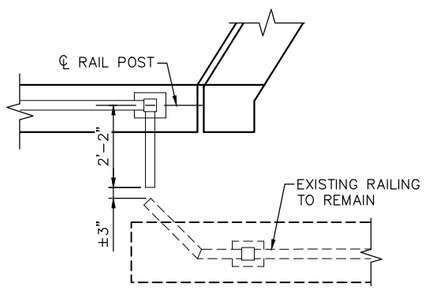

S.E. RAILING CORNER DETAIL

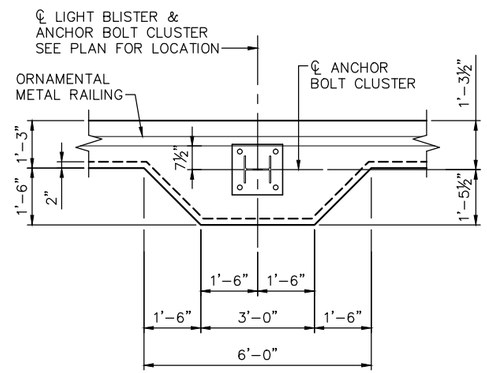

RAILING PLAN AT OCS BLISTER

NOTES:

SEE SHEET 26 FOR SECTION A-A & B-B.

SEE SHEET 26 FOR TRANSVERSE SECTION THRU DECK.

(1) OVERHEAD CATENARY SYSTEM POLE SUPPORT STATION 2689+17.29.

(2) OVERHEAD CATENARY SYSTEM POLE SUPPORT STATION 2689+35.06.

DRAFT-WORK IN PROCESS

NO.	DATE	BY	CHECK	DESIGN	REVISION / SUBMITTAL

DESIGNED BY: KAE | CHECKED BY: MDJ
DRAWN BY: LMT | CHECKED BY: MDJ

AECOM Kimley»Horn

90% SUBMISSION - 01/22/16

METROPOLITAN COUNCIL

SOUTHWEST Green Line LRT Extension

CIVIL - VOLUME 4F
TH 100 LRT BRIDGE
BRIDGE 27303
SUPERSTRUCTURE DETAILS 1

SHEET 25 OF 52

DISCIPLINE: STRUCTURES

SHEET NAME: CBR27303-BRG-SUP-003-1

Dec, 11 2015 11:46 am V:\3400_ADC\CAD\SEGMENT E2\PLAN SHEETS\STRUCTURES\T100-LRT\CBR27303-BRG-SUP-003.dwg By: Katie.Ellis

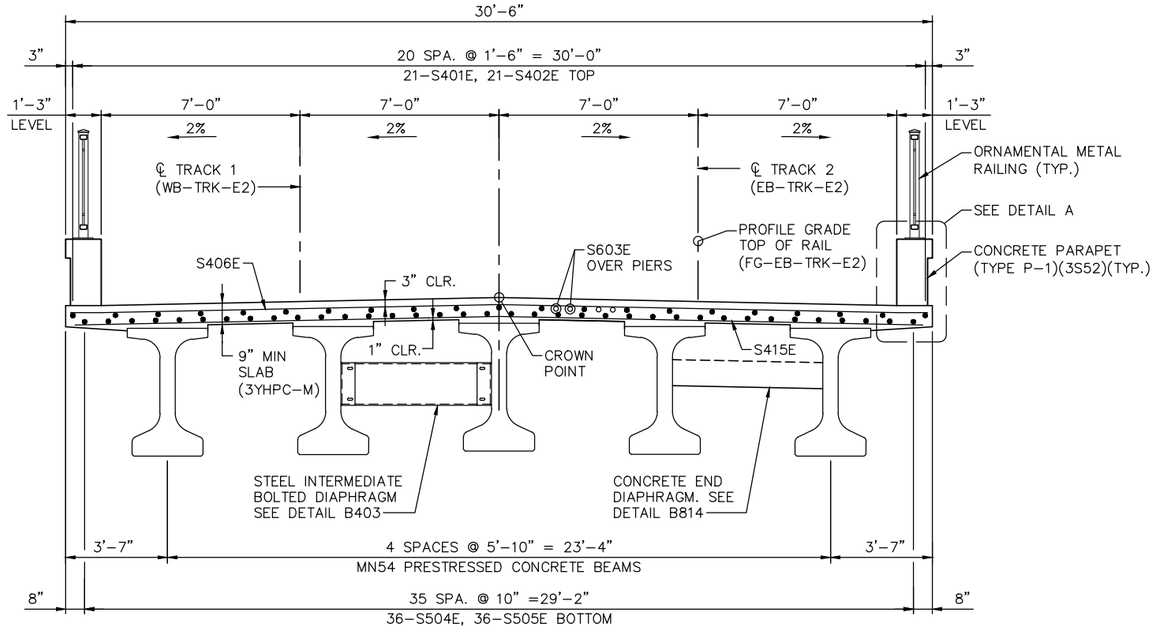

TRANSVERSE SECTION

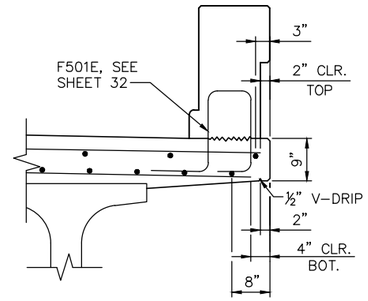

DETAIL A

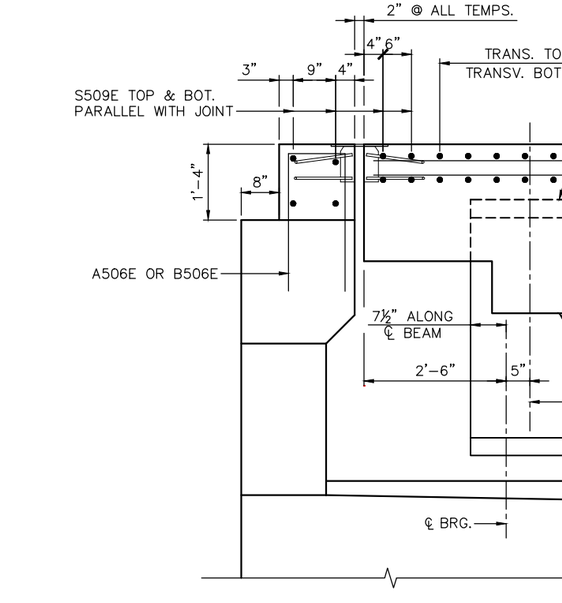

SECTION A-A

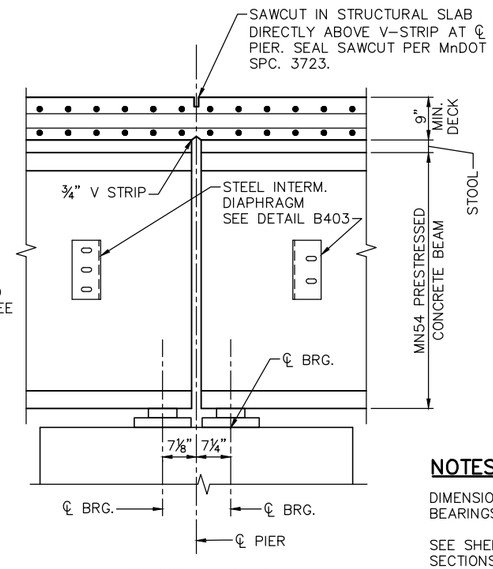

SECTION B-B

NOTES:

DIMENSIONS ARE PERPENDICULAR TO ℄ BEARINGS UNLESS NOTED OTHERWISE.

SEE SHEET 25 FOR LOCATION OF SECTIONS A-A AND B-B.

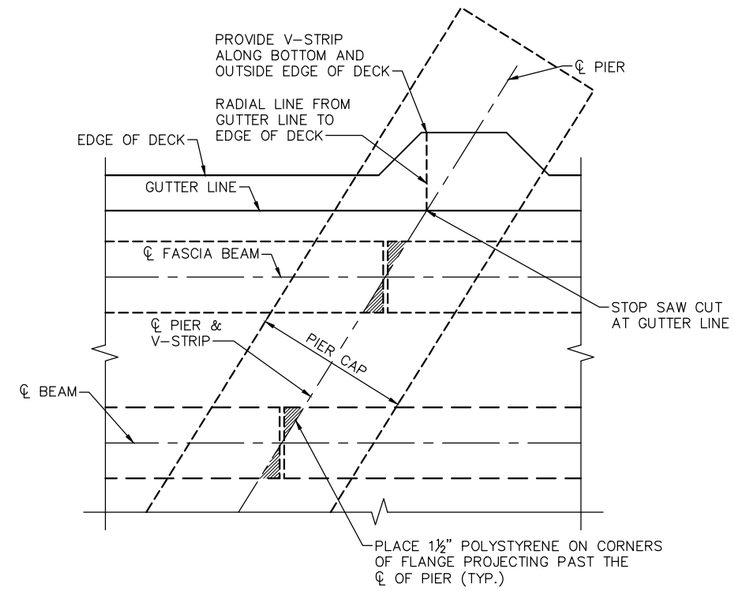

SAWCUT DETAIL @ PIER

DRAFT-WORK IN PROCESS

NO.	DATE	BY	CHECK	DESIGN	REVISION / SUBMITTAL

DESIGNED BY: KAE CHECKED BY: MDJ
DRAWN BY: LMT CHECKED BY: MDJ

AECOM Kimley»Horn

90% SUBMISSION - 01/22/16

METROPOLITAN COUNCIL

SOUTHWEST Green Line LRT Extension

CIVIL - VOLUME 4F
TH 100 LRT BRIDGE
BRIDGE 27303
SUPERSTRUCTURE DETAILS 2

DISCIPLINE: STRUCTURES
SHEET NAME: CBR27303-BRG-SUP-003-2

SHEET 26 OF 52

Dec, 11 2015 11:46 am V:\3400_ADC\CAD\SEGMENT E2\PLAN SHEETS\STRUCTURES\T100-LRT\CBR27303-BRG-SUP-003.dwg By: Katie.Ellis

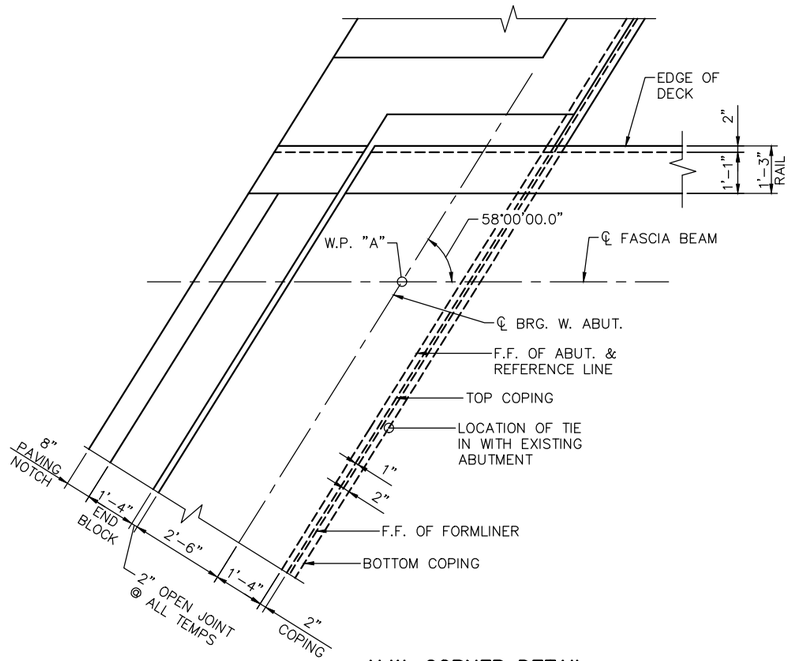

N.W. CORNER DETAIL

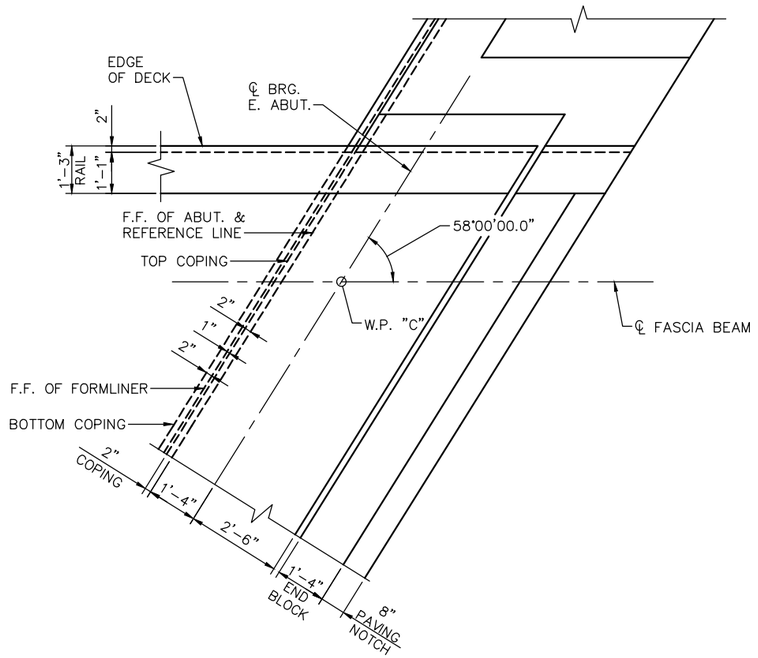

N.E. CORNER DETAIL

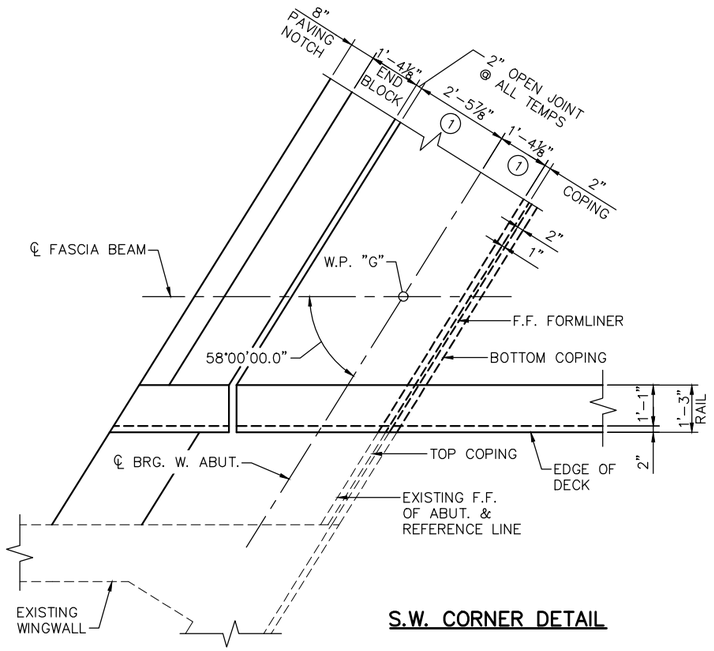

S.W. CORNER DETAIL

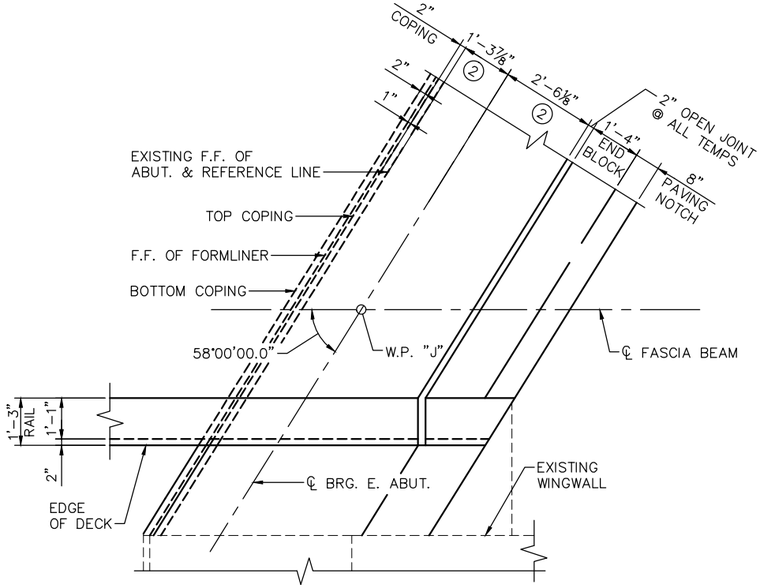

S.E. CORNER DETAIL

NOTES:

1. DIMENSION PROVIDED AT W.P. "G"
2. DIMENSION PROVIDED AT W.P. "J"

DRAFT-WORK IN PROCESS

NO.	DATE	BY	CHECK	DESIGN	REVISION / SUBMITTAL

DESIGNED BY: KAE CHECKED BY: MDJ
DRAWN BY: LMT CHECKED BY: MDJ

AECOM Kimley»Horn

90% SUBMISSION - 01/22/16

METROPOLITAN COUNCIL

SOUTHWEST Green Line LRT Extension

CIVIL - VOLUME 4F
TH 100 LRT BRIDGE
BRIDGE 27303
SUPERSTRUCTURE DETAILS 3

DISCIPLINE: STRUCTURES
SHEET NAME: CBR27303-BRG-SUP-004

SHEET 27 OF 52

Dec, 11 2015 11:46 am V:\3400_ADC\CAD\SEGMENT E2\PLAN SHEETS\STRUCTURES\T100-LRT\CBR27303-BRG-SUP-004.dwg By: Katie.Ellis

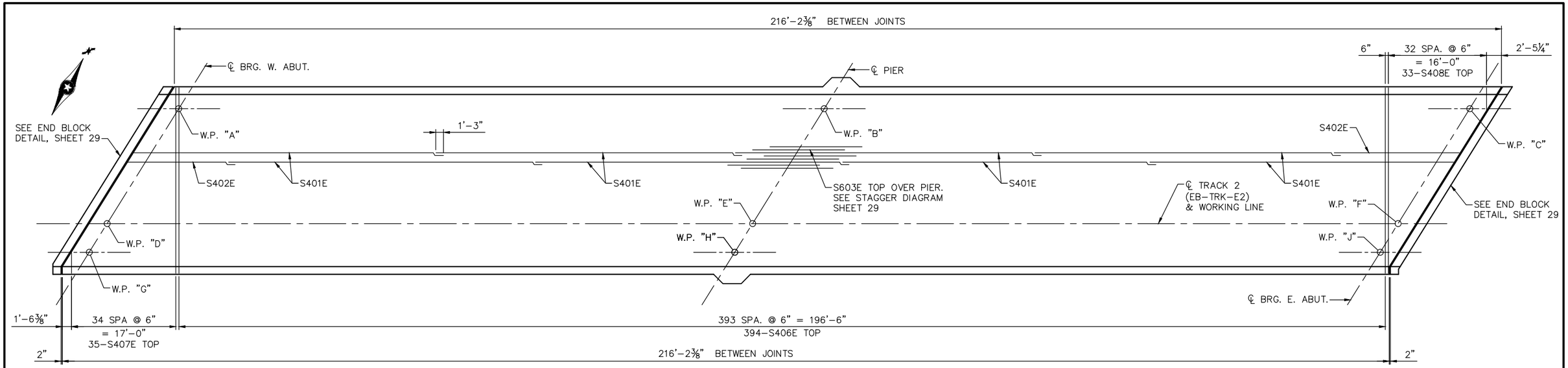

DECK PLAN – TOP REINFORCEMENT

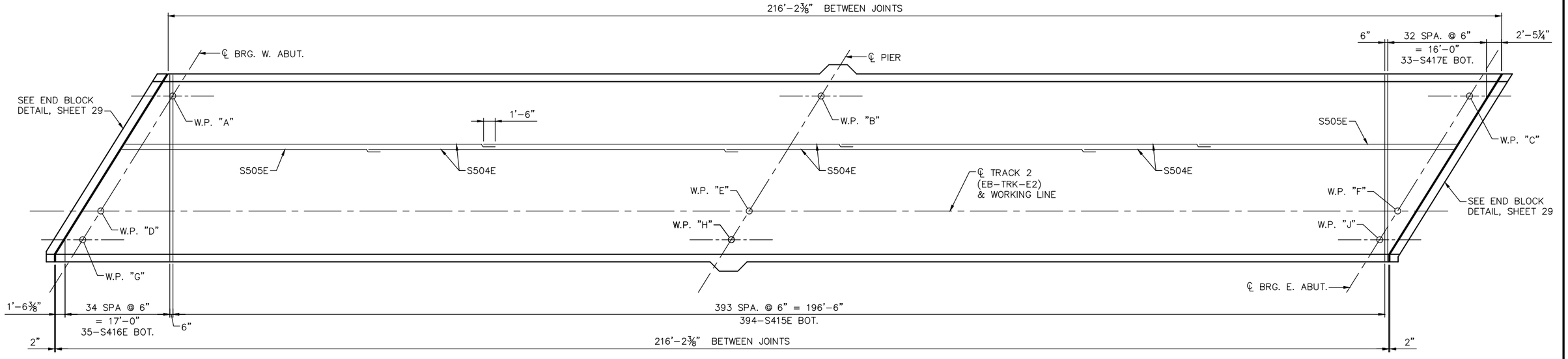

DECK PLAN – BOTTOM REINFORCEMENT

DRAFT-WORK IN PROCESS

NO.	DATE	BY	CHECK	DESIGN	REVISION / SUBMITTAL

DESIGNED BY: KAE | CHECKED BY: MDJ
DRAWN BY: LMT | CHECKED BY: MDJ

AECOM Kimley»Horn

90% SUBMISSION - 01/22/16

METROPOLITAN COUNCIL

SOUTHWEST Green Line LRT Extension

CIVIL - VOLUME 4F
TH 100 LRT BRIDGE
BRIDGE 27303
SUPERSTRUCTURE DETAILS 4

DISCIPLINE: STRUCTURES
SHEET NAME: CBR27303-BRG-SUP-003-3

SHEET 28 OF 52

Dec, 11 2015 11:47 am V:\3400_ADC\CAD\SEGMENT E2\PLAN SHEETS\STRUCTURES\T100-LRT\CBR27303-BRG-SUP-003.dwg By: Katie.Ellis

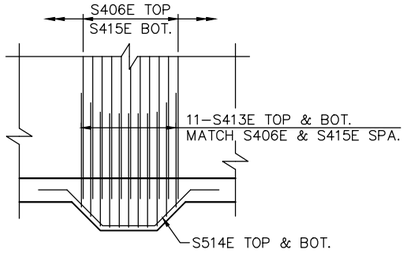

OCS POLE BLISTER DECK DETAIL

END BLOCK DETAIL

DETAIL "A"

SOUTHWEST CORNER SHOWN
NORTHEAST CORNER SIMILAR

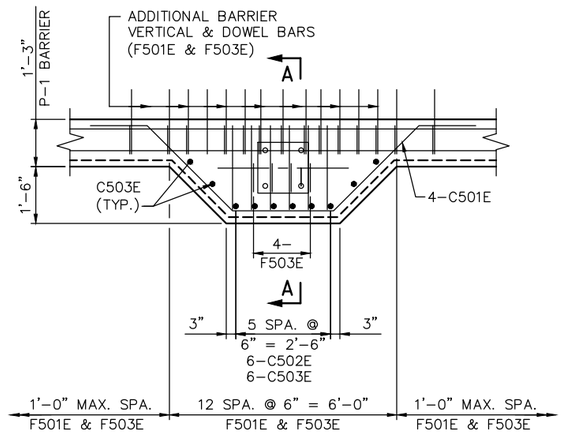

OCS POLE ANCHORAGE PLAN ON TYPE P–1 PARAPET

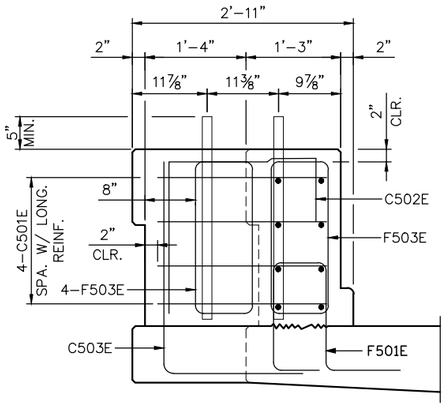

SECTION A–A

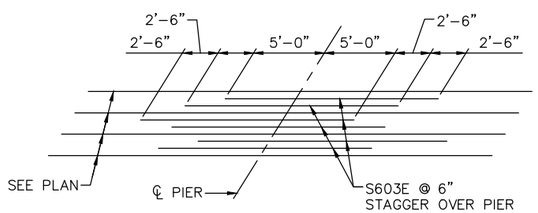

TOP SLAB REINFORCEMENT AT PIER

DRAFT-WORK IN PROCESS

NO.	DATE	BY	CHECK	DESIGN	REVISION / SUBMITTAL

DESIGNED BY: KAE | CHECKED BY: MDJ
DRAWN BY: LMT | CHECKED BY: MDJ

AECOM Kimley»Horn

90% SUBMISSION - 01/22/16

METROPOLITAN COUNCIL

SOUTHWEST Green Line LRT Extension

CIVIL - VOLUME 4F
TH 100 LRT BRIDGE
BRIDGE 27303
SUPERSTRUCTURE DETAILS 5

SHEET 29 OF 52

DISCIPLINE: STRUCTURES
SHEET NAME: CBR27303-BRG-SUP-003-4

Dec, 11 2015 11:47 am V:\3400_ADC\CAD\SEGMENT E2\PLAN SHEETS\STRUCTURES\T100-LRT\CBR27303-BRG-SUP-003.dwg By: Katie.Ellis

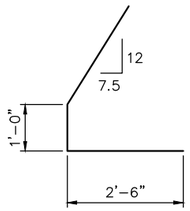

S511E

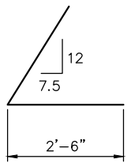

S512E

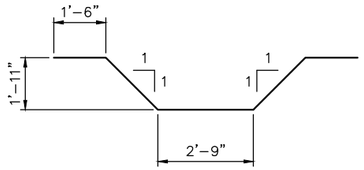

S514E

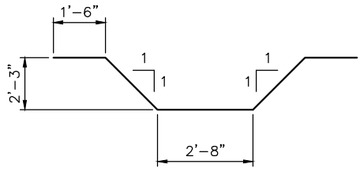

C501E

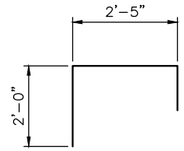

C502E

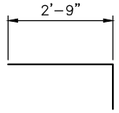

C503E

BILL OF REINFORCEMENT FOR SUPERSTRUCTURE

BAR	NO.	LENGTH	SHAPE	LOCATION
S401E	84	50'-0"	STR.	LONG., TOP
S402E	21	20'-11"	STR.	LONG., TOP
S603E	40	5'-0"	STR.	LONG., TOP @ PIER
S504E	108	60'-0"	STR.	LONG., BOT.
S505E	36	41'-11"	STR.	LONG., BOT.
S406E	394	30'-2"	STR.	TRANS., TOP
S407E	1 SET OF 35	3'-4" TO 30'-2'	STR.	TRANS., TOP
S408E	1 SET OF 33	16'-10"	STR.	TRANS., TOP
S509E	32	18'-10"	STR.	TRANS., TOP & BOT.
S510E	8	10'-0"	BENT	TRANS., TOP & BOT.
S511E	2	6'-0"	BENT	CORNER TIE
S512E	2	5'-0"	BENT	CORNER TIE
S413E	44	6'-0"	STR.	TRANS., TOP & BOT.
S514E	4	11'-1"	BENT	LONG., TOP & BOT.
S415E	394	29'-10"	STR.	TRANS., BOT.
S416E	1 SET OF 35	3'-2" TO 30'-0"	STR.	TRANS., BOT.
S417E	1 SET OF 33	3'-4" TO 30'-0"	STR.	TRANS., BOT.

BILL OF REINFORCEMENT FOR OCS POLE BLISTER

BAR	NO.	LENGTH	SHAPE	LOCATION
C501E	8	50'-0"	BENT	LONG., TIE
C502E	12	20'-11"	BENT	VERT., TIE
C503E	20	5'-0"	BENT	VERT., DOWEL

DRAFT-WORK IN PROCESS

NO.	DATE	BY	CHECK	DESIGN	REVISION / SUBMITTAL

DESIGNED BY: KAE CHECKED BY: MDJ
DRAWN BY: LMT CHECKED BY: MDJ

AECOM Kimley»Horn

90% SUBMISSION - 01/22/16

METROPOLITAN COUNCIL

SOUTHWEST Green Line LRT Extension

CIVIL - VOLUME 4F
TH 100 LRT BRIDGE
BRIDGE 27303
SUPERSTRUCTURE DETAILS 6

DISCIPLINE: STRUCTURES

SHEET NAME: CBR27303-BRG-SUP-003-5

SHEET 30 OF 52

Dec, 11 2015 11:47 am V:\3400_ADC\CAD\SEGMENT E2\PLAN SHEETS\STRUCTURES\T100-LRT\CBR27303-BRG-SUP-003.dwg By: Katie.Ellis

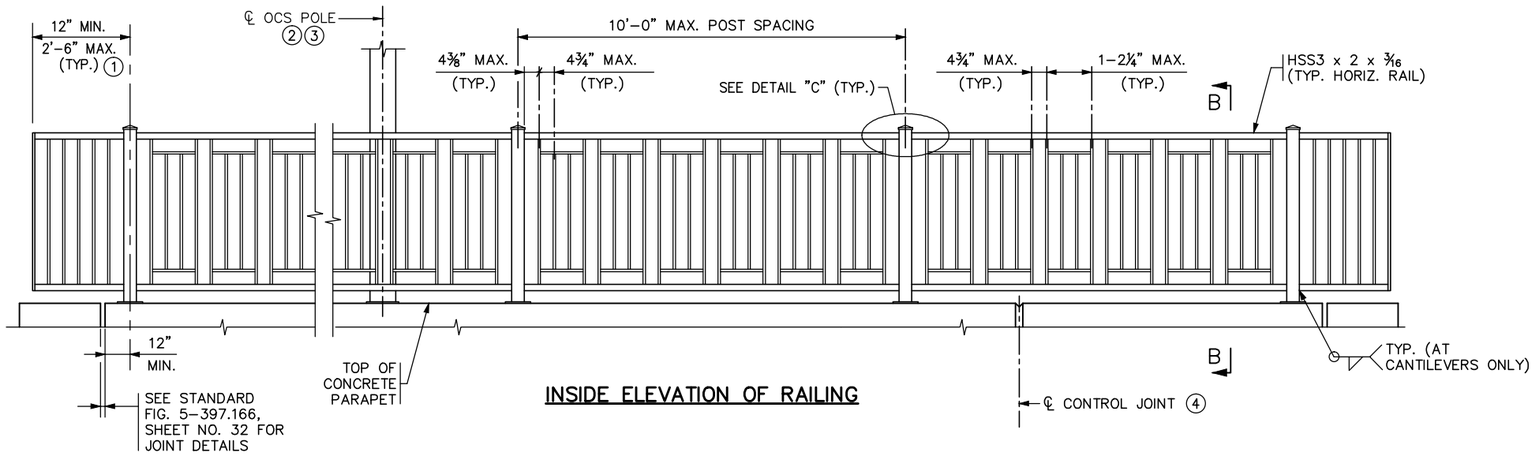

INSIDE ELEVATION OF RAILING

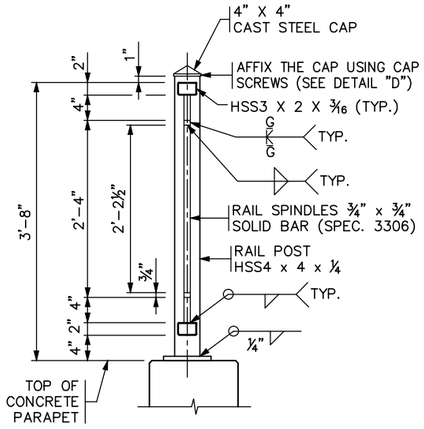

SECTION B-B

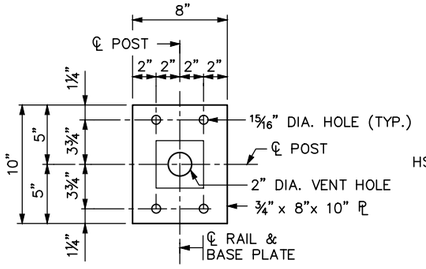

BASE PLATE

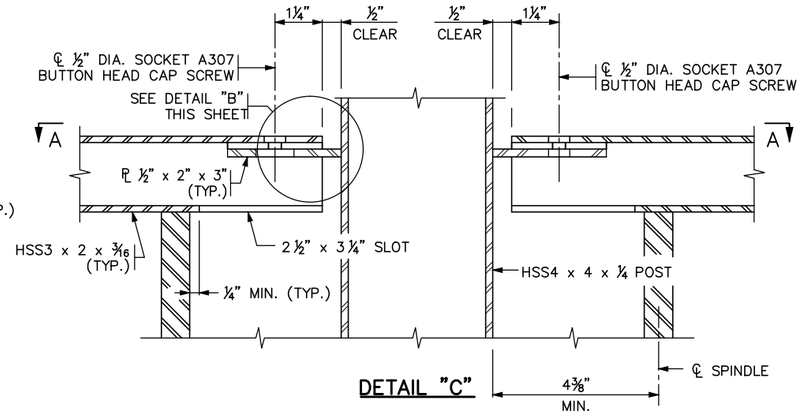

DETAIL "C"

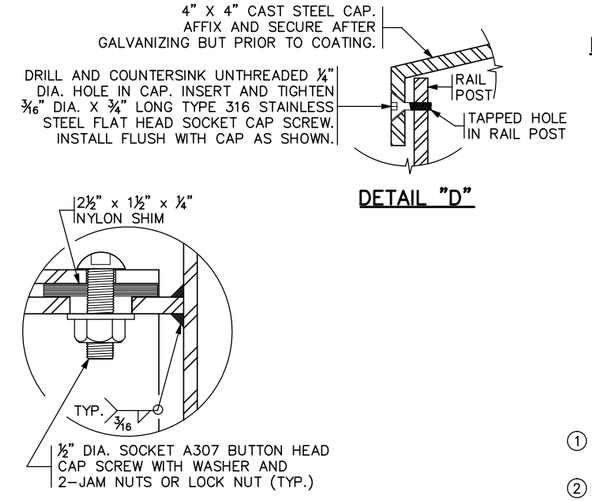

DETAIL "D"

DETAIL "B"

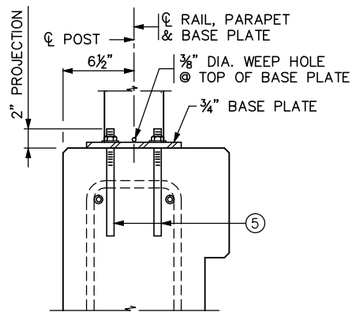

ANCHOR DETAIL

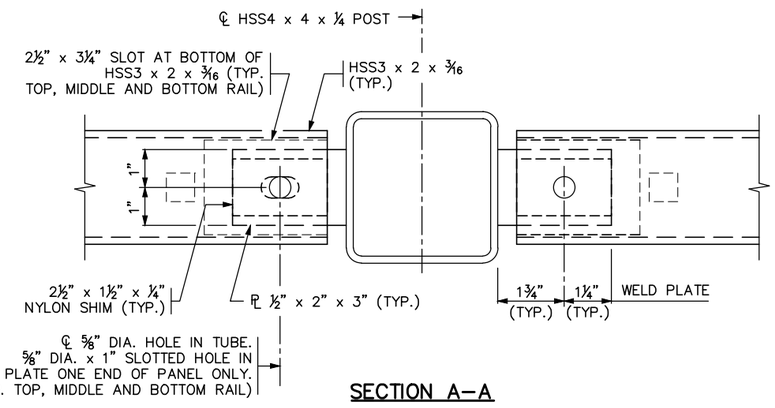

SECTION A-A

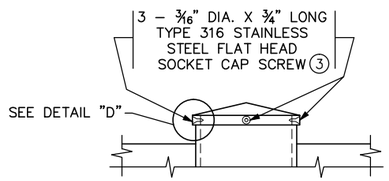

RAILPOST CAP MACHINE BOLT DETAIL

PLACE 3 CAP SCREWS, TWO PARALLEL TO RAILING AS SHOWN, AND ONE ON OUTSIDE FACE. ⑥

NOTES:

CONTINUOUSLY GROUND ALL METAL RAILINGS; SEE THE SPECIAL PROVISIONS. REFER TO THE ELECTRICAL PLANS AND ELECTRICAL SPECIAL PROVISIONS FOR DETAILS REGARDING BONDING MULTIPLE ELECTRICAL GROUNDING SYSTEMS.

USE A500, GRADE B STRUCTURAL STEEL TUBING (HSS) IN THE RAIL CONFORMING TO SPEC. 3361. FINIAL CAPS SHALL BE SPEC. 3322. ALL OTHER STEEL SHALL CONFORM TO SPEC. 3306.

GALVANIZE BOLTS, NUTS, WASHERS AND ANCHORS PER SPEC. 3392. GALVANIZE ALL OTHER STRUCTURAL STEEL PER SPEC. 3394, AFTER FABRICATION.

COAT THE GALVANIZED RAILING, BASE PLATES, AND PROTRUDING PORTIONS OF BOLTS, NUTS, ANCHORS, AND WASHERS.

INSTALL RAIL POSTS AND SPINDLES PLUMB.

SEE SPECIAL PROVISIONS FOR REQUIREMENTS NOT INCLUDED ON THIS SHEET.

DRILL ½" DIA. MAX. VENT HOLES ON THE UNDERSIDE OF RAIL TUBES AS NECESSARY TO FACILITATE GALVANIZING.

① PLACE ℄ OF END POST 12" FROM END OF CONCRETE PARAPET IF GUARDRAIL CONNECTION PLATE IS PRESENT.

② IF OCS POLE IS MOUNTED ON BLISTER, RAILING SHALL BE CONTINUOUS IN FRONT OF OCS POLE (SEE PARAPET & OCS POLE DETAILS).

③ CONTRACTOR TO COORDINATE OCS POLE DETAILS WITH THE RAILING FABRICATOR TO ENSURE PROPER CLEARANCES AND RAILING CONFIGURATION ADJACENT TO THE POLE.

④ SEE SUPERSTRUCTURE SHEETS FOR CONTROL JOINT SPACING AND DETAILS.

⑤ ADHESIVE ANCHORAGE WITH ⅝" DIA. ANCHOR ROD PER SPEC. 3385, TYPE A WITH HEX NUT AND WASHER. PROVIDE AN ADHESIVE WITH A MINIMUM CHARACTERISTIC BOND STRENGTH IN UNCRACKED CONCRETE OF 1.5 KSI. EMBED THE ANCHORAGE NO LESS THAN 5" REGARDLESS OF CHARACTERISTIC BOND STRENGTH. DRILL THROUGH REINFORCEMENT (IF ENCOUNTERED) TO ACHIEVE MINIMUM EMBEDMENT. ENSURE HEX NUT IS IN CONTACT WITH THE ADJACENT SURFACE AND TORQUE TO 60 FT-LBS UNLESS A HIGHER TORQUE IS RECOMMENDED BY THE MANUFACTURER. PROOF LOAD TO 6.9 KIPS. SEE SPECIAL PROVISIONS FOR ADDITIONAL REQUIREMENTS.

⑥ SHOP INSTALL CAST STEEL CAP FIRMLY SEATED TO TOP OF POST SUCH THAT THE CAP DOES NOT ROCK OR WOBBLE.

NO.	DATE	BY	CHECK	DESIGN	REVISION / SUBMITTAL

DESIGNED BY: KAE CHECKED BY: MDJ
DRAWN BY: LMT CHECKED BY: MDJ

AECOM Kimley»Horn

90% SUBMISSION - 01/22/16

METROPOLITAN COUNCIL

SOUTHWEST Green Line LRT Extension

CIVIL - VOLUME 4F
TH 100 LRT BRIDGE
BRIDGE 27303
RAILING DETAILS

DISCIPLINE: STRUCTURES
SHEET NAME: CBR27303-BRG-RAL-001-1

SHEET 31 OF 52

Dec, 11 2015 11:47 am V:\3400_ADC\CAD\SEGMENT E2\PLAN SHEETS\STRUCTURES\T100-LRT\CBR27303-BRG-RAL-001.dwg By: Katie.Ellis

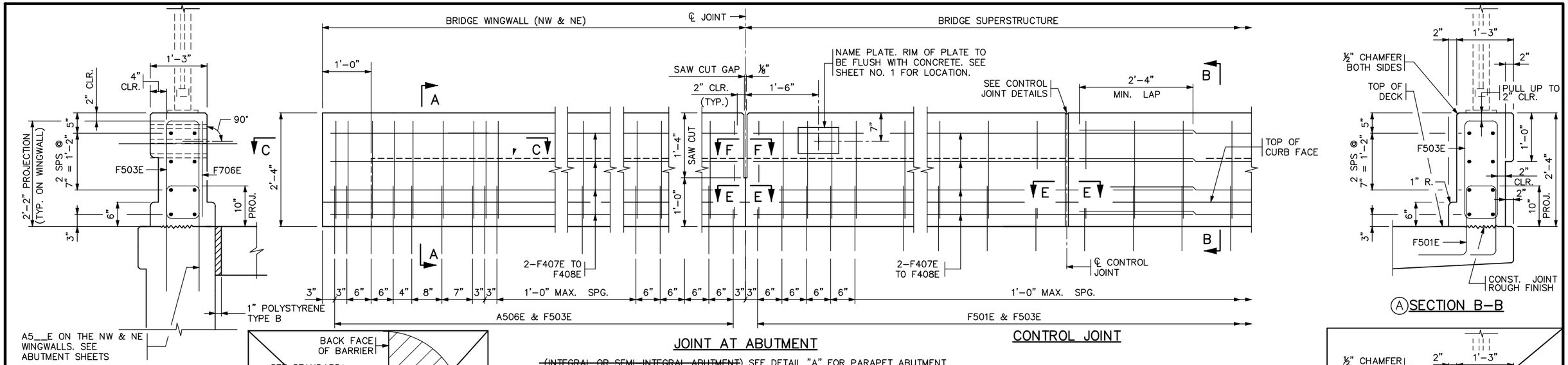

Ⓐ SECTION A–A

Ⓐ SECTION B–B

~~(INTEGRAL OR SEMI-INTEGRAL ABUTMENT)~~ SEE DETAIL "A" FOR PARAPET ABUTMENT

Ⓐ INSIDE ELEVATION OF PARAPET

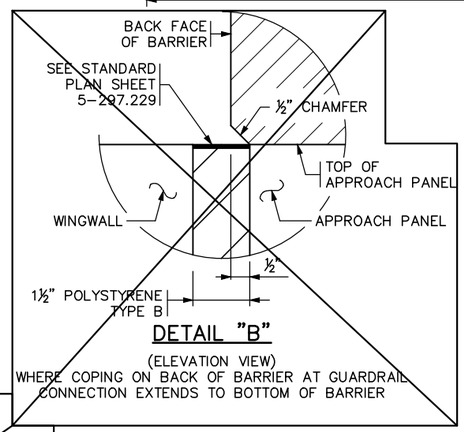

DETAIL "B"

(ELEVATION VIEW)
WHERE COPING ON BACK OF BARRIER AT GUARDRAIL CONNECTION EXTENDS TO BOTTOM OF BARRIER

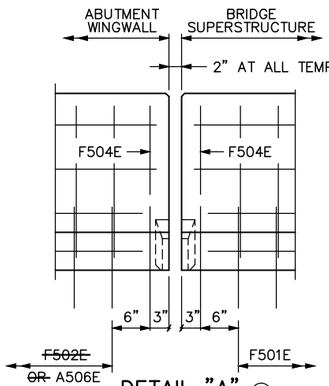

DETAIL "A" ②

(USE ONLY WITH STRIP SEAL EXPANSION DEVICE)
(EXPANSION DEVICE NOT SHOWN)

BILL OF REINFORCEMENT FOR PARAPET

BAR	NO.	LENGTH	SHAPE	LOCATION
F501E		5'-2"		PARAPET VERTICAL
~~F502E~~		~~5'-4"~~		~~PARAPET VERTICAL~~
F503E		6'-5"		PARAPET VERTICAL
F504E		4'-9"		PARAPET VERTICAL
~~F505E~~		~~8'-1"~~		~~PARAPET VERTICAL~~
~~F706E~~		~~6'-7"~~		~~PARAPET VERTICAL~~
F407E				PARAPET LONGIT.
F408E				PARAPET LONGIT.
F4__E				PARAPET LONGIT.

* F504E WHEN STRIP SEAL EXPANSION DEVICE IS USED, WITHOUT RAISED SIDEWALK. (SEE DETAIL "A")

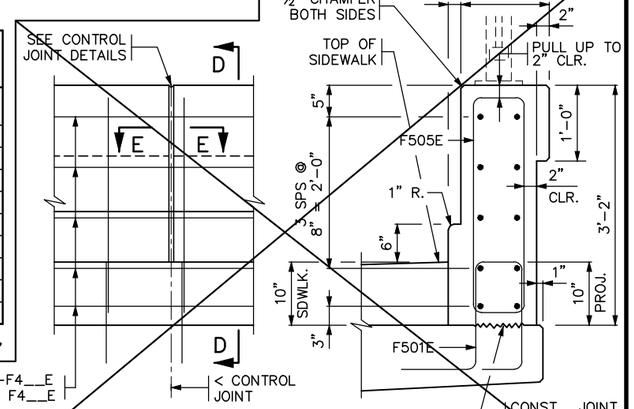

INSIDE ELEVATION OF PARAPET WITH RAISED SIDEWALK

FOR VERTICAL REINFORCEMENT SPACING FOLLOW INSIDE ELEVATION OF PARAPET ABOVE.

SECTION D–D

SHEET MODIFICATION:
Ⓐ DENOTES MODIFICATION TO STANDARD SHEET

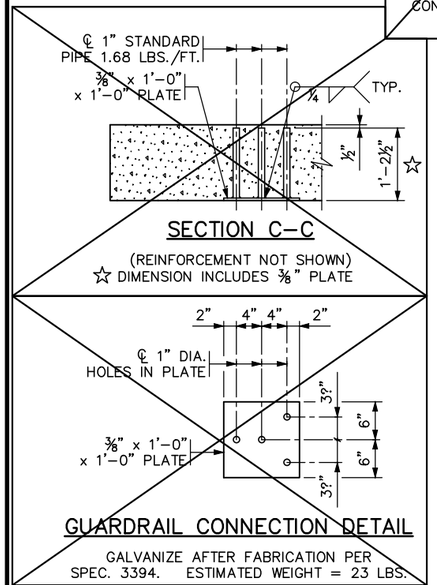

SECTION C–C

(REINFORCEMENT NOT SHOWN)
☆ DIMENSION INCLUDES ⅜" PLATE

GUARDRAIL CONNECTION DETAIL

GALVANIZE AFTER FABRICATION PER SPEC. 3394. ESTIMATED WEIGHT = 23 LBS.

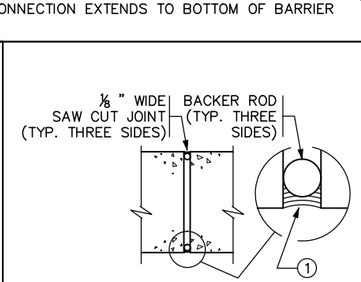

SECTION F–F

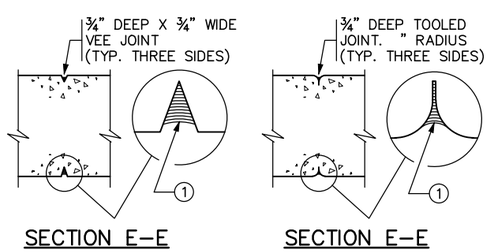

SECTION E–E
CONTRACTOR OPTION 1

SECTION E–E
CONTRACTOR OPTION 2

CONTROL JOINT DETAILS

WHEN USING SLIP FORM METHOD TO PLACE THE CONCRETE, CUT JOINT 3 INCHES DEEP USING MARGIN TROWEL OR SIMILAR MEANS IMMEDIATELY AFTER CONCRETE PLACEMENT (TYP. THREE SIDES)

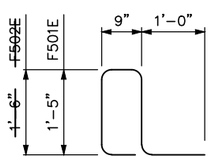

F501E, ~~F502E~~

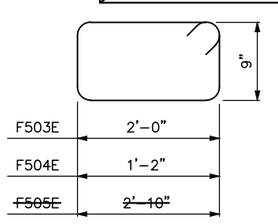

F503E, F504E ~~AND F505E~~

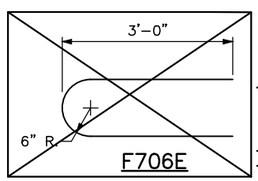

F706E

GENERAL NOTES

CONTINUOUSLY GROUND ALL METAL RAILINGS; SEE THE SPECIAL PROVISIONS. REFER TO THE ELECTRICAL PLANS AND ELECTRICAL SPECIAL PROVISIONS FOR DETAILS REGARDING BONDING MULTIPLE ELECTRICAL GROUNDING SYSTEMS.

~~PAYMENT LENGTH SHALL BE MEASURED BETWEEN THE OUTSIDE FACES OF THE CONCRETE PARAPET.~~

CONCRETE PARAPET = 416 LBS./FT. (0.103 CU. YDS./FT.)

~~CONCRETE PARAPET W/ADJACENT SIDEWALK (BASED ON A 10" SIDEWALK HEIGHT) = 573 LBS./FT. (0.141 CU. YDS./FT.)~~

FINISH ALL EDGES OF PARAPET WITH " CHAMFER, EXCEPT WHERE OTHERWISE NOTED.

MAXIMUM SPACING OF CONTROL JOINTS ON SUPERSTRUCTURE, APPROACH AND WINGWALL SHALL BE 10 FT. SEE SUPERSTRUCTURE SHEET FOR JOINT SPACING.

Ⓐ GUARDRAIL CONNECTION TO BE STRUCTURAL STEEL, SPEC. 3306. ~~GUARDRAIL CONNECTION AND NAME PLATE TO BE CONSIDERED INCIDENTAL TO "TYPE P-1 PARAPET CONCRETE (3S52)".~~

~~SEE STANDARD FIGURE 5-397.___ FOR LIGHT BLISTER DETAILS.~~

PARAPET QUANTITIES ARE LISTED IN SUMMARY OF QUANTITIES FOR SUPERSTRUCTURE.

① JOINT SEALANT PER MnDOT APPROVED/QUALIFIED PRODUCTS LIST – CRACK AND JOINT MATERIALS – SILICONE JOINT SEALERS.

② REFER TO EXPANSION JOINT SHEET FOR COVER PLATE DETAILS.

DRAFT-WORK IN PROCESS

FIG. 5–397.166 (MOD.)

REVISION:

APPROVED: NOVEMBER 6, 2013
Nancy Daubenberger
STATE BRIDGE ENGINEER

CERTIFIED BY _____ 01/22/16
LICENSED PROFESSIONAL ENGINEER — DATE
NAME: MATTHEW D. JENSEN LIC. NO. 44587

TITLE: CONCRETE PARAPET (TYPE P-1) WITH INTEGRAL END POST (WITHOUT CONCRETE WEARING COURSE)

DES: KAE	DR: LMT	APPROVED:
CHK: MDJ	CHK: MDJ	

SHEET NO. 32 OF 52 SHEETS

BRIDGE NO. 27303

Dec. 11 2015 11:47 am V:\3400_ADC\CAD\SEGMENT E2\PLAN SHEETS\STRUCTURES\T100-LRT\CBR27303-BRG-RAL-001.dwg By: Katie.Ellis

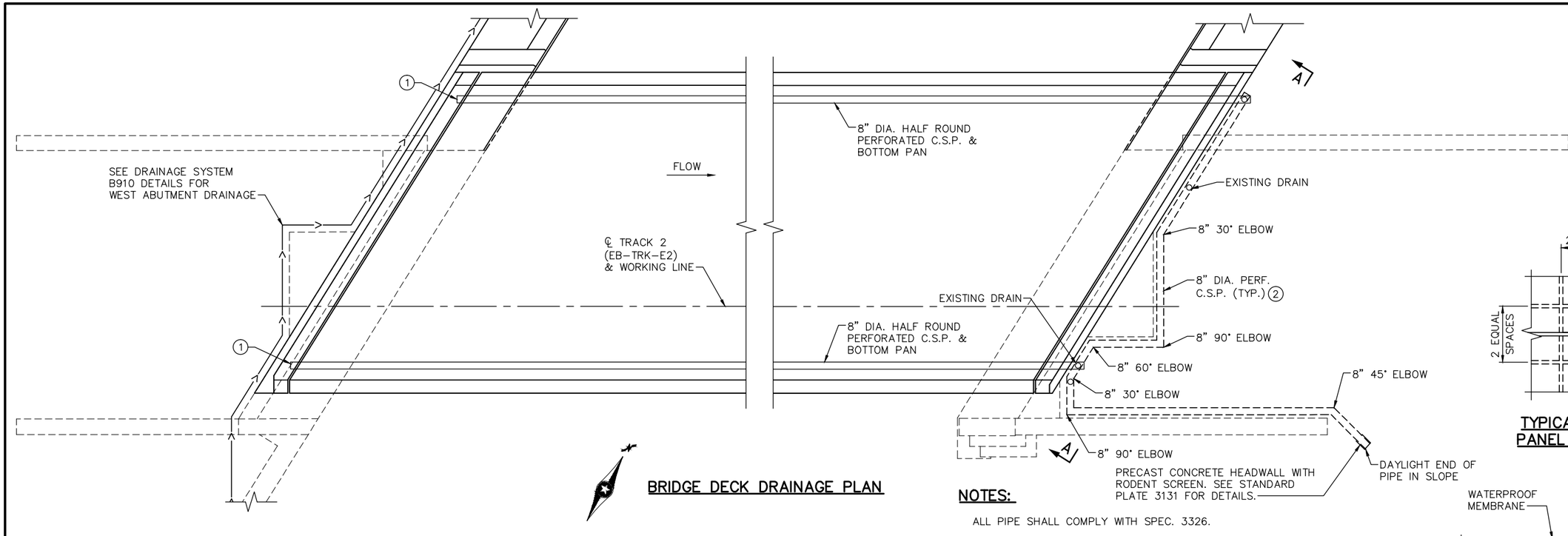

BRIDGE DECK DRAINAGE PLAN

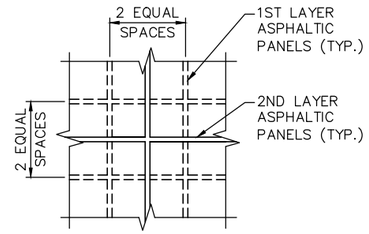

TYPICAL ASPHALT PANEL PLACEMENT

NOTES:

ALL PIPE SHALL COMPLY WITH SPEC. 3326.

ALL STEEL COMPONENTS OF THE DRAINAGE SYSTEM INCLUDING PIPES, BOTTOM PANS, COVERS, CLAMPS, END PLATES, AND HARDWARE SHALL BE GALVANIZED IN ACCORDANCE WITH SPEC. 3392 AND SPEC. 3394.

① TERMINATE DRAIN AT THE BACK OF THE WEST ABUTMENT EXPANSION JOINT BLOCK.

② WRAP WITH GEOTEXTILE PER SPEC. 3733, TYPE 1. ATTACH GEOTEXTILE TO PIPE PER SPEC. 2502.

③ EXISTING DECK DRAINAGE. REMOVE AS REQUIRED AND ABANDON IN PLACE.

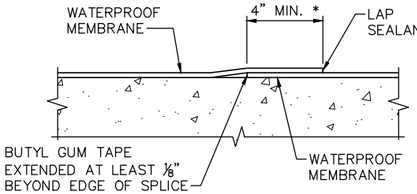

BUTYL RUBBER MEMBRANE OR EPDM WATERPROOFING SPLICE DETAIL

* ALL CONTACT SURFACES TO BE THOROUGHLY CLEANED & CEMENTED

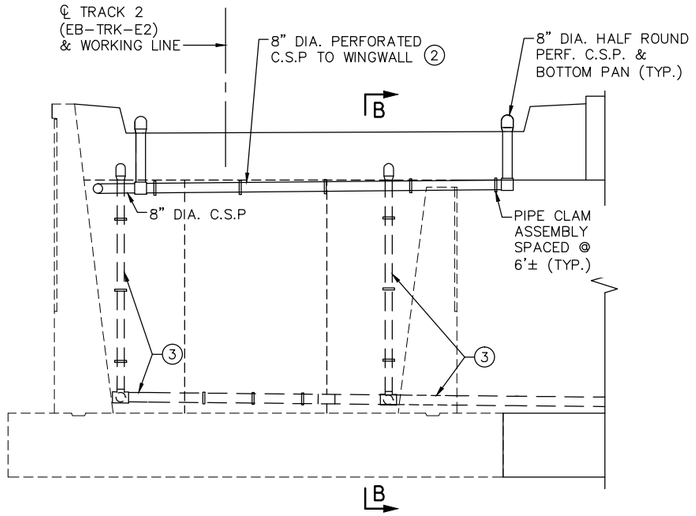

SECTION A–A

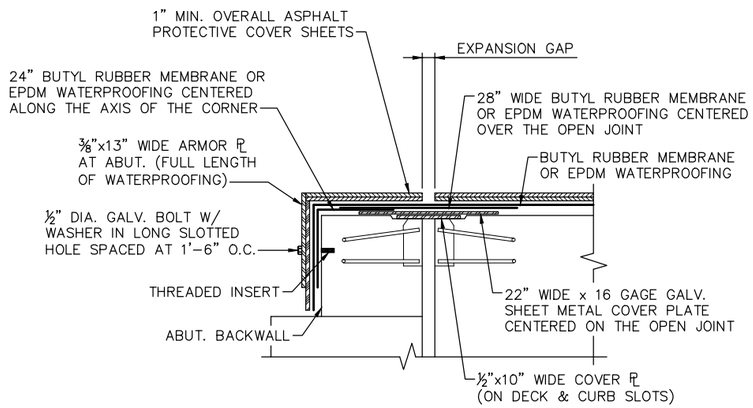

WATERPROOFING AT ABUTMENT

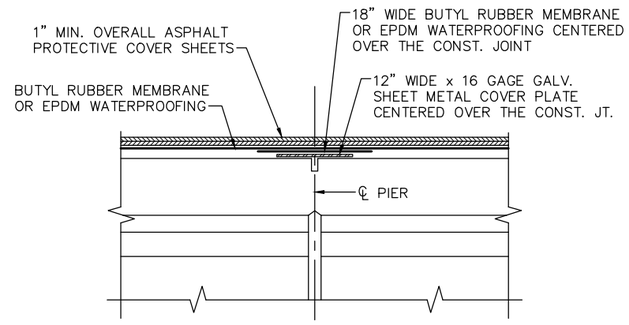

WATERPROOFING AT PIER

DRAFT-WORK IN PROCESS

NO.	DATE	BY	CHECK	DESIGN	REVISION / SUBMITTAL

DESIGNED BY: KAE | CHECKED BY: MDJ
DRAWN BY: LMT | CHECKED BY: MDJ

AECOM Kimley»Horn

90% SUBMISSION - 01/22/16

METROPOLITAN COUNCIL

SOUTHWEST Green Line LRT Extension

CIVIL - VOLUME 4F
TH 100 LRT BRIDGE
BRIDGE 27303
DECK DRAINAGE AND WATERPROOFING 1

DISCIPLINE: STRUCTURES
SHEET NAME: CBR27303-BRG-DRN-001-1

SHEET 33 OF 52

Dec, 11 2015 11:48 am V:\3400_ADC\CAD\SEGMENT E2\PLAN SHEETS\STRUCTURES\T100-LRT\CBR27303-BRG-DRN-001.dwg By: Katie.Ellis

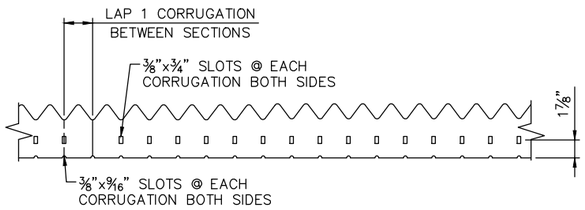

COVER ELEVATION



COVER SECTION

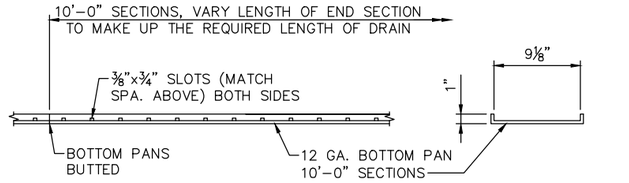

BOTTOM PAN ELEVATION

BOTTOM PAN SECTION

DECK DRAIN DETAILS

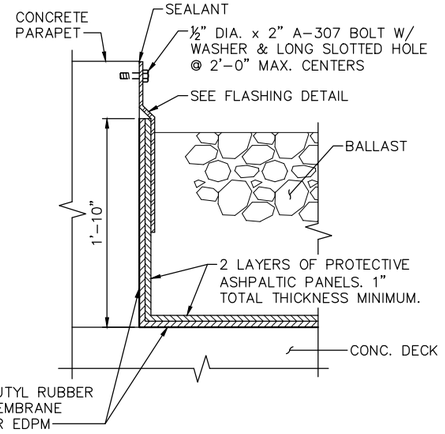

TRANS. SECTION AT CONC. DECK

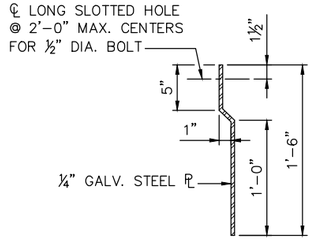

FLASHING DETAIL

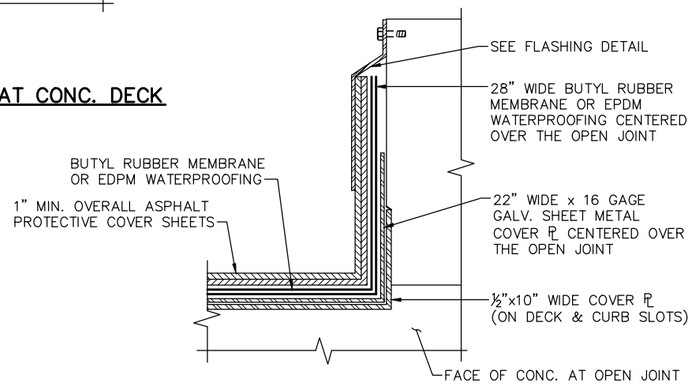

TRANS. SECTION AT OPEN JOINT

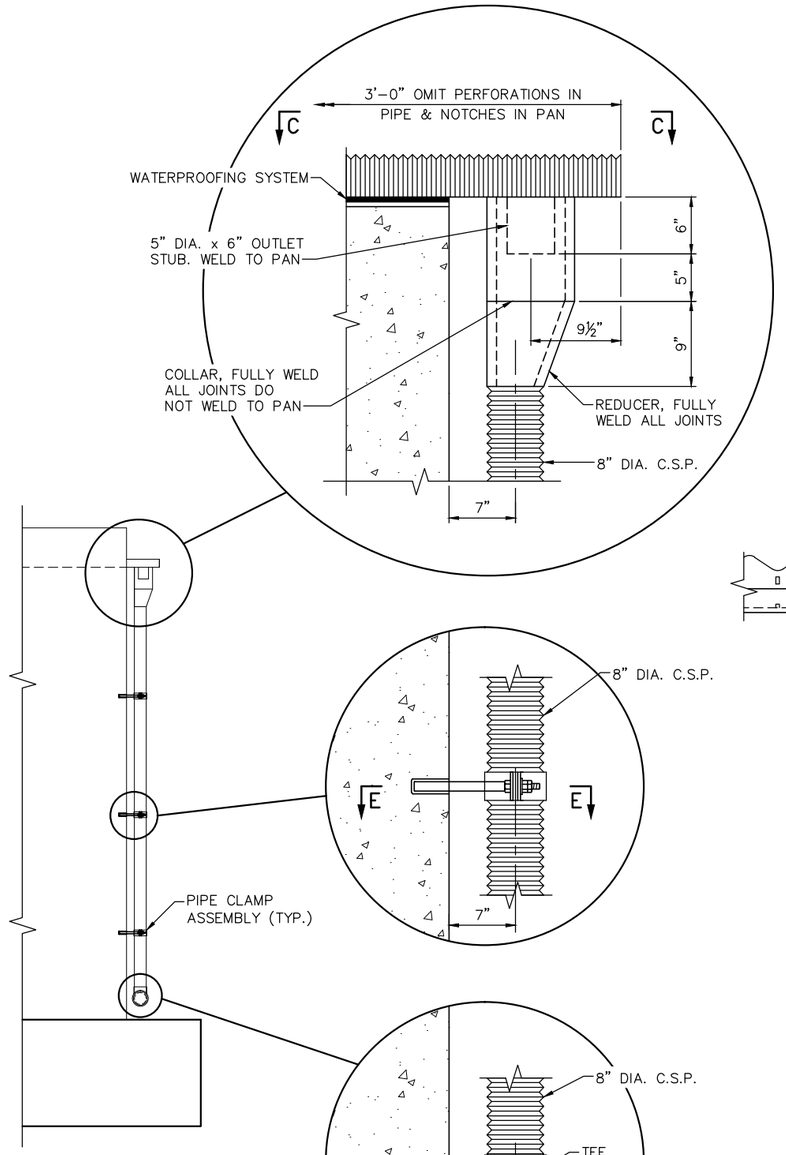

SECTION B–B

NOTE:
SIMILAR FOR HORIZONTAL RUN

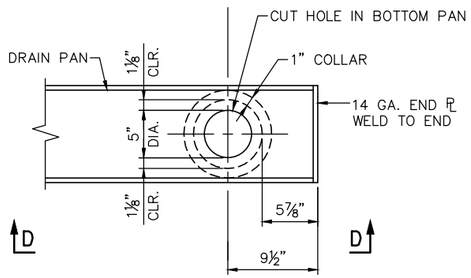

VIEW C–C

(8" DIA. 12 GA. HALF–ROUND
C.S.P. NOT SHOWN)

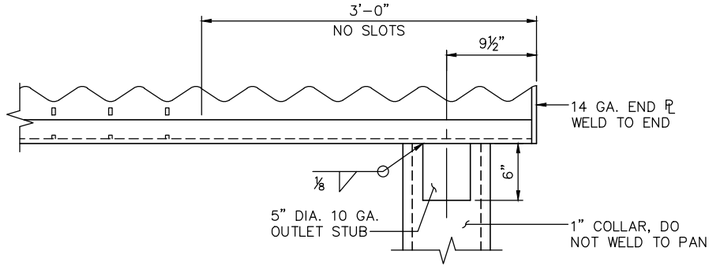

VIEW D–D

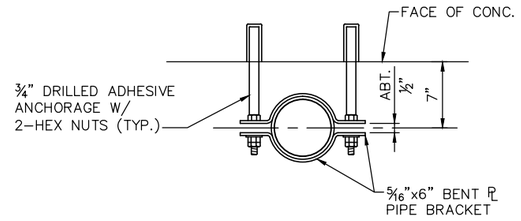

SECTION E–E

(PIPE CLAMP ASSEMBLY)

DRAFT-WORK IN PROCESS

NO.	DATE	BY	CHECK	DESIGN	REVISION / SUBMITTAL

DESIGNED BY: KAE CHECKED BY: MDJ
DRAWN BY: LMT CHECKED BY: MDJ

AECOM Kimley»Horn

90% SUBMISSION - 01/22/16

METROPOLITAN COUNCIL

SOUTHWEST Green Line LRT Extension

CIVIL - VOLUME 4F
TH 100 LRT BRIDGE
BRIDGE 27303
DECK DRAINAGE AND WATERPROOFING 2

DISCIPLINE: STRUCTURES
SHEET NAME: CBR27303-BRG-DRN-001-2

SHEET 34 OF 52

Dec, 11 2015 11:48 am V:\3400_ADC\CAD\SEGMENT E2\PLAN SHEETS\STRUCTURES\T100-LRT\CBR27303-BRG-DRN-001.dwg By: Katie.Ellis

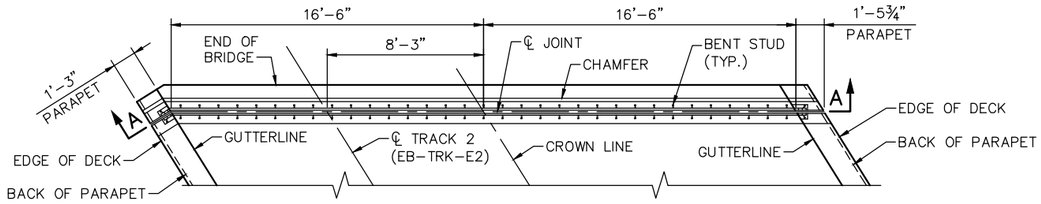

PLAN @ EXPANSION DEVICE

COVER PLATE NOT SHOWN FOR CLARITY
WEST JOINT SHOWN
EAST JOINT SIMILAR

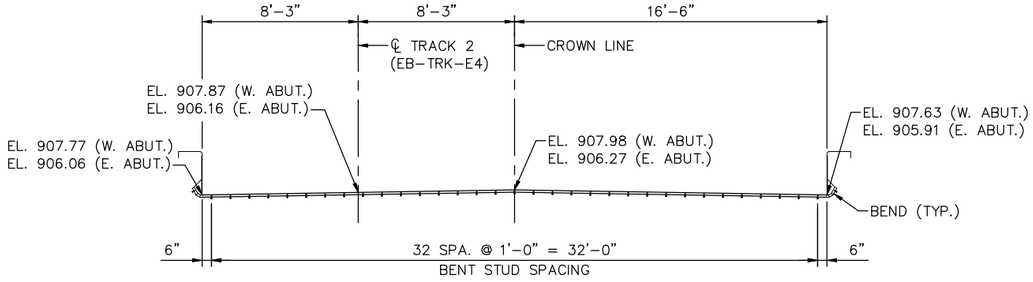

SECTION A–A – ALONG CENTERLINE JOINT

ELEVATIONS SHOWN ARE ½" BELOW TOP OF DECK
@ CENTERLINE JOINT (LOOKING DOWNSTATION)

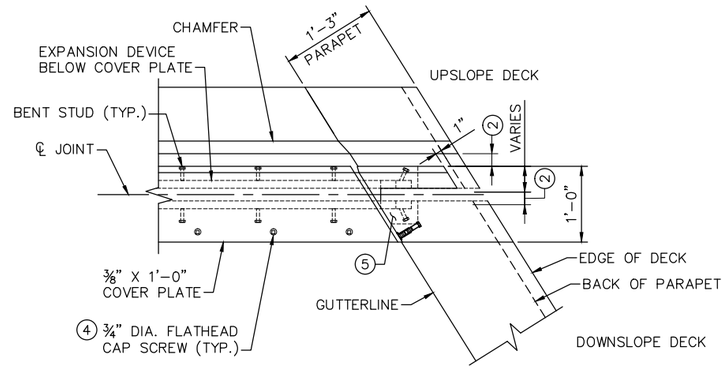

ENLARGED PLAN

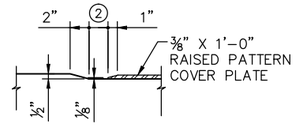

DETAIL "C"

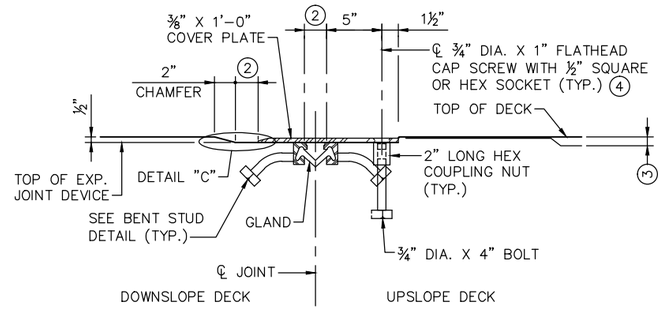

SECTION B–B

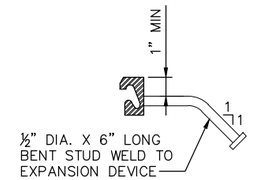

BENT STUD DETAIL

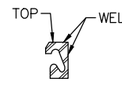

SECTION VIEW @ BEND

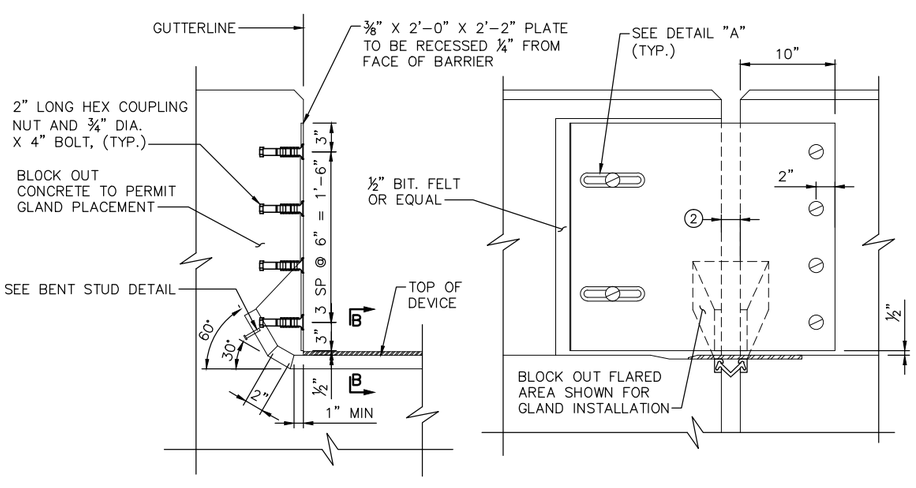

SECTION THROUGH PARAPET

PARAPET ELEVATION

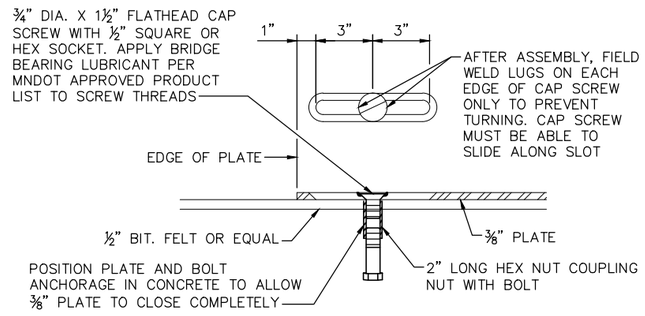

DETAIL "A"

BENT STUD DETAIL

NOTES:

GALVANIZE STRUCTURAL STEEL AFTER FABRICATION AS PER SPEC. 3394. GALVANIZE FASTENERS AS PER SPEC. 3392.

JOINTS IN EXTRUSION SHALL BE LOCATED AT BREAKS IN TRANSVERSE PROFILE AND AS OTHERWISE REQUIRED. JOINTS SHALL BE CLOSE FIT AND WELDED. REPAIR AFTER WELDING AS PER SPEC. 2471.3.L.

STRUCTURAL STEEL SHALL COMPLY WITH SPEC. 3306.

EXPANSION DEVICE SHALL BE STRAIGHTENED TO A TOLERANCE OF ⅛" IN 10 FT.

CAP SCREWS SHALL BE COUNTERSUNK 1/16" BELOW TOP OF PLATE.

(1) EXPANSION DEVICE ELEVATIONS SHOWN ARE ½" BELOW FINISHED DECK ELEVATIONS. COVER PLATE SHALL BE INSTALLED PER TOLERANCE SHOWN IN SECTION B–B.

(2) 2" ALL TEMPERATURES.

(3) TOP OF CONCRETE TO TOP OF COVER PLATE ⅛" (¼" MAX.).

(4) MAXIMUM TRANSVERSE SPACING OF ¾" DIA. FLATHEAD SCREWS AND COUPLINGS SHALL BE 1'–0".

(5) MINIMAL AMOUNT OF CURB CONCRETE ABOVE EXPANSION DEVICE SHALL BE BLOCKED OUT FOR GLAND INSTALLATION.

DRAFT-WORK IN PROCESS

NO.	DATE	BY	CHECK	DESIGN	REVISION / SUBMITTAL

DESIGNED BY: KAE CHECKED BY: MDJ
DRAWN BY: LMT CHECKED BY: MDJ

AECOM Kimley»Horn

90% SUBMISSION - 01/22/16

METROPOLITAN COUNCIL

SOUTHWEST Green Line LRT Extension

CIVIL - VOLUME 4F
TH 100 LRT BRIDGE
BRIDGE 27303
WATERPROOF EXPANSION DEVICE

DISCIPLINE: STRUCTURES
SHEET NAME: CBR27303-BRG-EXP-001

SHEET 35 OF 52

Dec, 11 2015 11:48 am V:\3400_ADC\CAD\SEGMENT E2\PLAN SHEETS\STRUCTURES\T100-LRT\CBR27303-BRG-EXP-001.dwg By: Katie.Ellis

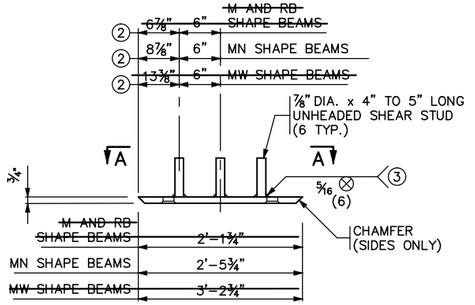

FRONT ELEVATION

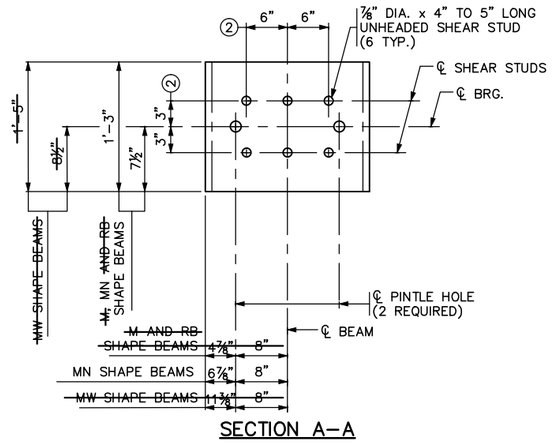

SECTION A–A

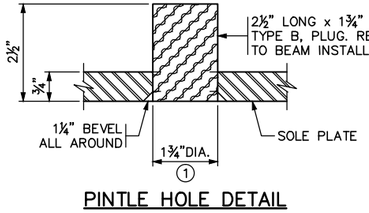

PINTLE HOLE DETAIL

NOTES:

MATERIAL TO BE STRUCTURAL STEEL PER MnDOT SPEC. 3306.

WELDED STUDS TO BE WELDABLE CARBON STEEL PER MnDOT SPEC. 3391.2D.

SOLE PLATE FOR BEARING ASSEMBLY TO BE GALVANIZED PER MnDOT SPEC. 3394 AFTER FABRICATION.

PINTLE HOLES SHALL BE FREE OF ZINC BUILD UP FROM GALVANIZING.

~~SOLE PLATES ARE INCIDENTAL TO PRESTRESSED CONCRETE BEAMS.~~

① FOR 1½" DIA. PINTLES.

② THESE DIMENSIONS MAY BE MODIFIED TO CLEAR PRESTRESSED STRANDS. HOWEVER, CHANGES MUST BE APPROVED BY THE ENGINEER.

③ THE REQUIREMENTS FOR WELDING STUDS SHALL COMPLY WITH AASHTO/AWS D1.1.

APPROVED: SEPTEMBER 22, 2011	STATE OF MINNESOTA DEPARTMENT OF TRANSPORTATION	REVISED	DETAIL NO.
Nancy Daubenberger STATE BRIDGE ENGINEER	SOLE PLATE (PRESTRESSED CONCRETE BEAMS) (FOR BEARINGS WITH PINTLES)		B303

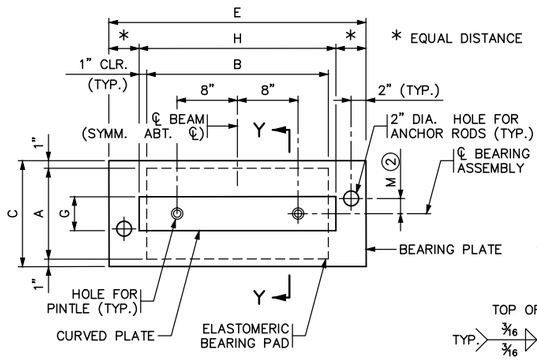

PLAN

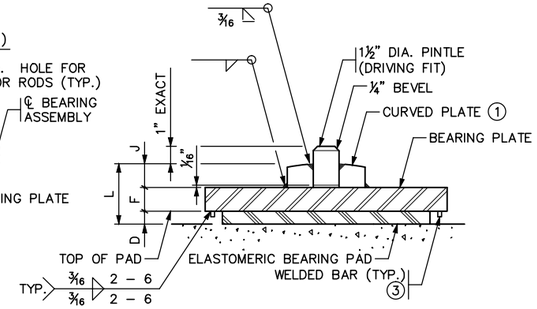

SECTION Y–Y

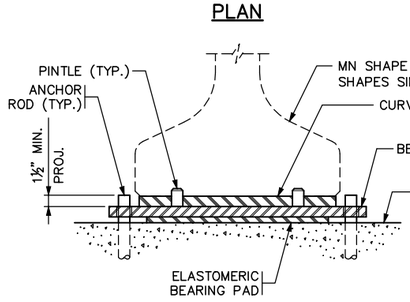

SECTION X–X

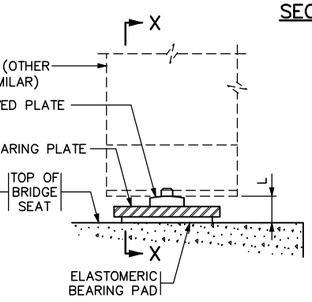

SIDE ELEVATION

ANCHOR RODS NOT SHOWN

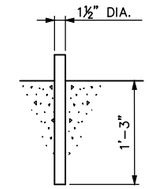

ANCHOR ROD DETAIL

TABLE

ASSEMBLY TYPE	LOCATION	BEAM SIZE	BEARING PAD SIZE A	B	D	SHAPE FACTOR	BEARING PLATE SIZE C	E	F	CURVED PLATE SIZE G	H	J	ANCHOR ROD OFFSET +/–②	M	ASSY. HEIGHT L	CURVED PLATE R ①
		MN 54	12"	24"	½"	8.0	14"	38"	1½"	4½"	26"	1¼"	0"	0"	3¼"	16"
~~—~~	~~—~~	~~MW~~	~~16"~~	~~36"~~	~~½"~~	~~11.1~~	~~18"~~		~~1½"~~	~~4½"~~	~~38"~~	~~1¼"~~			~~3¼"~~	

NOTES:

PROVIDE ELASTOMERIC MATERIALS AND PAD CONSTRUCTION PER SPEC. 3741.

PROVIDE STEEL PLATES PER SPEC. 3306.

PROVIDE ANCHOR RODS PER SPEC. 3385, TYPE A. GALVANIZE PER SPEC. 3392.

PROVIDE PINTLES PER SPEC. 3309.

GALVANIZE STRUCTURAL STEEL BEARING ASSEMBLY AFTER FABRICATION PER SPEC. 3394, EXCEPT AS NOTED.

~~PAYMENT FOR BEARING ASSEMBLY INCLUDES ALL MATERIAL ON THIS DETAIL.~~

① THE MIN. RADIUS IS 16" UNLESS OTHERWISE SPECIFIED IN THE TABLE. THE MAX. RADIUS IS 24". FINISH TO 250 MICRO. THE FINISHED THICKNESS OF THE PLATE MAY BE 1/16" LESS THAN SHOWN.

② "+" DENOTES OFFSET AS SHOWN.
"–" DENOTES OFFSET OPPOSITE OF SHOWN.

③ ⅜" X ⅜" BAR INSTALLED ON BEARING PLATE AROUND PERIMETER OF BEARING PAD. BAR LENGTH IS 2" LESS THAN ADJACENT PAD DIMENSION, CENTERED ON PAD. CENTERLINE OF BAR TO EDGE OF PAD DIMENSION = ½".

DESIGN DATA:
MAXIMUM HORIZONTAL LOAD IS 70 KIPS FOR 1½" PINTLES.

APPROVED: SEPTEMBER 22, 2011	STATE OF MINNESOTA DEPARTMENT OF TRANSPORTATION	REVISED	DETAIL NO.
Nancy Daubenberger STATE BRIDGE ENGINEER	CURVED PLATE BEARING ASSEMBLY (PRESTRESSED CONCRETE BEAMS) (FIXED)	11–06–2013 11–03–2015	B310

DRAFT-WORK IN PROCESS

NO.	DATE	BY	CHECK	DESIGN	REVISION / SUBMITTAL

DESIGNED BY: KAE CHECKED BY: MDJ
DRAWN BY: LMT CHECKED BY: MDJ

AECOM Kimley»Horn

90% SUBMISSION - 01/22/16

METROPOLITAN COUNCIL
SOUTHWEST Green Line LRT Extension

CIVIL - VOLUME 4F
TH 100 LRT BRIDGE
BRIDGE 27303
BRIDGE DETAILS 1

DISCIPLINE: STRUCTURES
SHEET NAME: CBR27303-BRG-DTL-001-1

SHEET 36 OF 52

Dec, 11 2015 11:48 am V:\3400_ADC\CAD\SEGMENT E2\PLAN SHEETS\STRUCTURES\T100-LRT\CBR27303-BRG-DTL-001.dwg By: Katie.Ellis

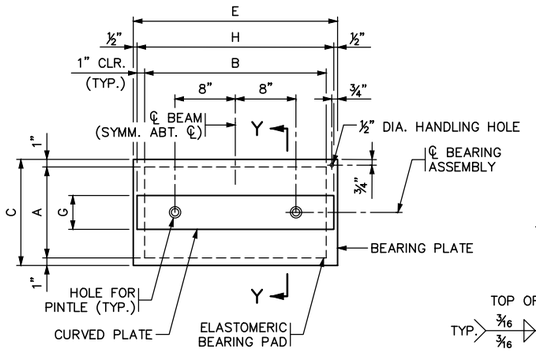

PLAN

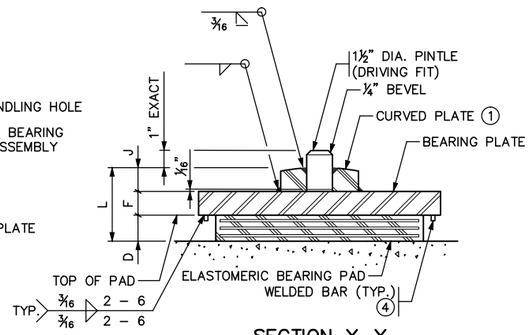

SECTION Y–Y

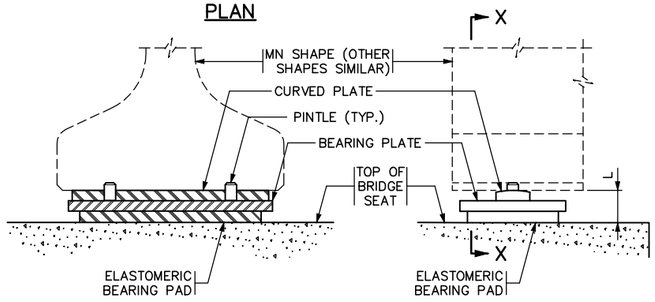

SECTION X–X

SIDE ELEVATION

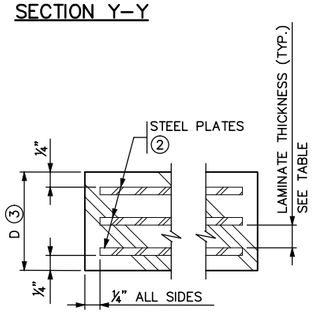

SECTION THROUGH ELASTOMERIC BEARING PAD

TABLE

ASSEMBLY TYPE	LOCATION	BEAM SIZE	BEARING PAD SIZE A	B	D	STEEL PLATES NO.	THICK.	LAMINATES NO.	THICK.	SHAPE FACTOR	BEARING PLATE SIZE C	E	F	CURVED PLATE SIZE G	H	J	ASSY. HEIGHT L	CURVED PLATE R ①
		MN 54	12"	24"	1⅛"	3	⅛"	2	½"	8	14"	27"	1½"	4½"	26"	1¼"	4⅞"	16"
~~——~~	~~——~~	~~MN~~	~~16"~~	~~36"~~			~~⅛"~~		~~½"~~		~~18"~~	~~39"~~	~~1½"~~	~~4½"~~	~~38"~~	~~1¼"~~		

NOTES:

PROVIDE ELASTOMERIC MATERIALS AND PAD CONSTRUCTION PER SPEC. 3741.

PROVIDE STEEL PLATES PER SPEC. 3306.

PROVIDE PINTLES PER SPEC. 3309.

GALVANIZE STRUCTURAL STEEL BEARING ASSEMBLY AFTER FABRICATION PER SPEC. 3394, EXCEPT AS NOTED.

~~PAYMENT FOR BEARING ASSEMBLY INCLUDES ALL MATERIAL ON THIS DETAIL.~~

① THE MIN. RADIUS IS 16" UNLESS OTHERWISE SPECIFIED IN THE TABLE. THE MAX. RADIUS IS 24". FINISH TO 250 MICRO. THE FINISHED THICKNESS OF THE PLATE MAY BE 1⁄16" LESS THAN SHOWN.

② DO NOT GALVANIZE THESE PLATES.

③ THE TOTAL THICKNESS SHOWN INCLUDES THE STEEL PLATES.

④ ⅜" X ⅜" BAR INSTALLED ON BEARING PLATE AROUND PERIMETER OF BEARING PAD. BAR LENGTH IS 2" LESS THAN ADJACENT PAD DIMENSION, CENTERED ON PAD. CENTERLINE OF BAR TO EDGE OF PAD DIMENSION = ½".

DESIGN DATA:
MAXIMUM HORIZONTAL LOAD IS 70 KIPS FOR 1½" PINTLES.

APPROVED: SEPTEMBER 22, 2011	STATE OF MINNESOTA DEPARTMENT OF TRANSPORTATION	REVISED 11–03–2015	DETAIL NO.
Nancy Daubenberger STATE BRIDGE ENGINEER	CURVED PLATE BEARING ASSEMBLY (PRESTRESSED CONCRETE BEAMS) (EXPANSION)		B311

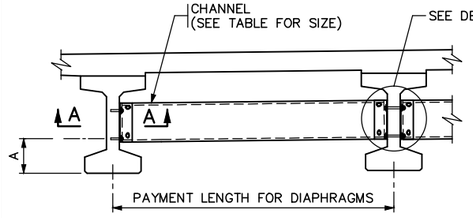

PART TRANSVERSE SECTION AT DIAPHRAGM

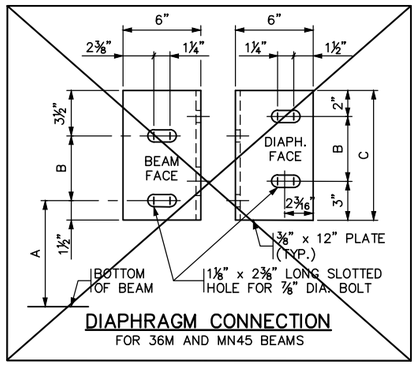

DIAPHRAGM CONNECTION
FOR 36M AND MN45 BEAMS

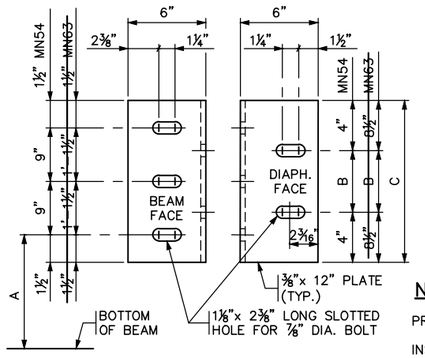

DIAPHRAGM CONNECTION
FOR MN54 AND MN63 BEAMS

TABLE

BEAM HEIGHT	DISTANCE A	B	C	CHANNEL SIZE
~~36M~~	~~1' 3"~~	~~7"~~	~~1' 0"~~	~~C12x20.7~~
~~MN45~~	~~1'-7¾"~~	~~7"~~	~~1' 0"~~	~~C12x20.7~~
MN54	1'-7¾"	1'-1"	1'-9"	MC18x42.7
~~MN63~~	~~1'-7¾"~~	~~1' 1"~~	~~2' 6"~~	~~MC18x42.7~~

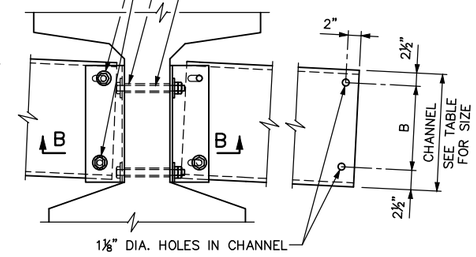

DETAIL "A"

INTERIOR BEAM WITH CONTINUOUS LINE OF DIAPHRAGMS

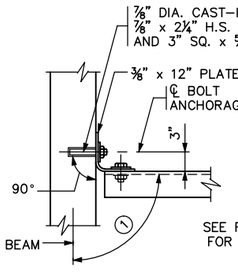

SECTION A–A

TYPICAL SECTION AT ALL FASCIA BEAMS

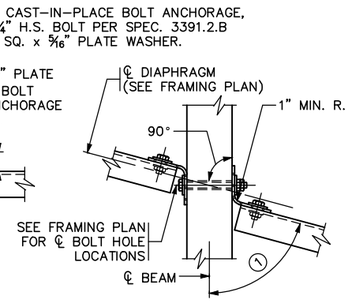

SECTION B–B

TYPICAL SECTION AT INTERIOR BEAM WITH CONTINUOUS OR STAGGERED INTERMEDIATE DIAPHRAGMS

NOTES:

PROVIDE STEEL PER SPEC. 3306.

INSTALL PER SPEC. 2405.3.K.

TORQUE ALL BOLTS, INCLUDING ANCHOR BOLTS TO 80 FT.–LBS.

SHOP BEND THE LEG OF THE 12" PLATE TO CONFORM TO THE DIAPHRAGM. A ⅜" x 6" x 6" ANGLE MAY BE USED FOR DIAPHRAGMS PERPENDICULAR TO BEAMS.

~~INCLUDE ALL STRUCTURAL STEEL SHOWN ON THIS DETAIL, INCLUDING BOLTS AND WASHERS, IN UNIT PRICE BID FOR DIAPHRAGMS FOR PRESTRESSED BEAMS.~~

BENT PLATES MAY BE USED IN PLACE OF CHANNELS. THE BENT PLATES MUST BE THE SAME HEIGHT AS THE CHANNELS THEY REPLACE, BE 5⁄16" IN THICKNESS, AND HAVE LEGS 5" LONG.

GALVANIZE STEEL PLATES AND SHAPES PER SPEC. 3394.

GALVANIZE BOLTS, NUTS AND WASHERS PER SPEC. 3392.

① FOR SKEW ANGLES UNDER 20°, USE 90° LESS THE SKEW ANGLE. FOR SKEW ANGLES OVER 20°, USE 90°.

APPROVED: NOVEMBER 03, 2015	STATE OF MINNESOTA DEPARTMENT OF TRANSPORTATION		DETAIL NO.
Beverly A. J. Farnaker STATE BRIDGE ENGINEER	STEEL INTERMEDIATE DIAPHRAGM (FOR 36M, MN45 – MN63 PRESTRESSED CONCRETE BEAMS)		B403 DRAFT-WORK IN PROCESS

NO.	DATE	BY	CHECK	DESIGN	REVISION / SUBMITTAL

DESIGNED BY: KAE CHECKED BY: MDJ
DRAWN BY: LMT CHECKED BY: MDJ

AECOM Kimley»Horn

90% SUBMISSION - 01/22/16

METROPOLITAN COUNCIL

SOUTHWEST Green Line LRT Extension

CIVIL - VOLUME 4F
TH 100 LRT BRIDGE
BRIDGE 27303
BRIDGE DETAILS 2

DISCIPLINE: STRUCTURES
SHEET NAME: CBR27303-BRG-DTL-001-2

SHEET 37 OF 52

Dec, 11 2015 11:48 am V:\3400_ADC\CAD\SEGMENT E2\PLAN SHEETS\STRUCTURES\T100-LRT\CBR27303-BRG-DTL-001.dwg By: Katie.Ellis

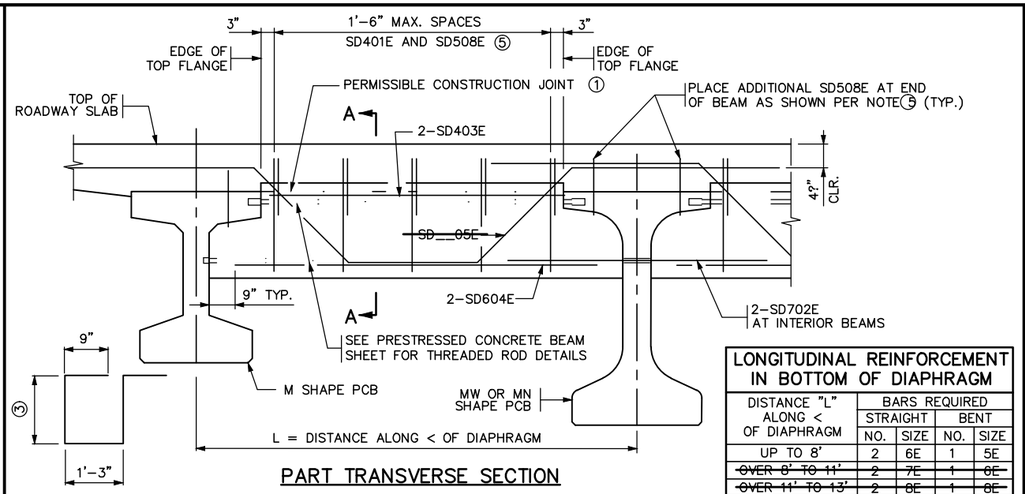

PART TRANSVERSE SECTION

(L > 8' SHOWN)

SD401E

LONGITUDINAL REINFORCEMENT IN BOTTOM OF DIAPHRAGM

DISTANCE "L" ALONG < OF DIAPHRAGM	BARS REQUIRED			
	STRAIGHT		BENT	
	NO.	SIZE	NO.	SIZE
UP TO 8'	2	6E	1	5E
~~OVER 8' TO 11'~~	~~2~~	~~7E~~	~~1~~	~~6E~~
~~OVER 11' TO 13'~~	~~2~~	~~8E~~	~~1~~	~~8E~~
~~OVER 13' TO 15'~~	~~2~~	~~9E~~	~~1~~	~~10E~~
~~OVER 15' TO 18'~~	~~2~~	~~11E~~	~~1~~	~~11E~~

SHEET MODIFICATION:
(A) DENOTES MODIFICATION TO STANDARD SHEET

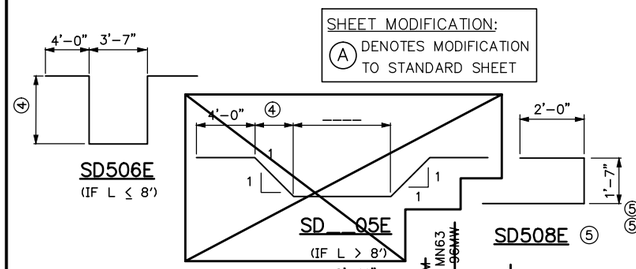

SECTION A–A

(M SHAPE PCB SHOWN)

BILL OF REINFORCEMENT FOR END DIAPHRAGM

BAR	NO.	LENGTH	SHAPE	LOCATION
SD401E	24	7'-6"		VERTICAL TIE
SD702E	12	5'-0"		LONG. THRU BEAM
SD403E	16	3'-7"		LONG. TOP
SD__04E	16	4'-9"		LONG. BOTTOM
~~SD__05E~~				~~LONGITUDINAL~~
SD506E	8	16'-3"		LONGITUDINAL
⑤ SD507E	6	27'-10"		LONGITUDINAL
⑤ SD508E	24	7'-6"		VERTICAL TIE

NOTES:

CONCRETE FOR END DIAPHRAGMS SHALL BE THE SAME MIX AS USED IN DECK.

QUANTITIES FOR END DIAPHRAGM CONCRETE AND REINFORCEMENT SHOWN ON THIS DETAIL SHALL BE LISTED IN SUPERSTRUCTURE QUANTITIES.

THREADED RODS ARE INCIDENTAL TO PRESTRESSED CONCRETE BEAMS.

① USE OF CONSTRUCTION JOINT REQUIRES CLEARANCE FOR EXPANSION DEVICE. WHEN CONSTRUCTION JOINT IS USED AT THIS LOCATION, DIAPHRAGM FALSEWORK SHALL REMAIN INPLACE UNTIL COMPLETION OF SLAB CURING PERIOD.

② PERPENDICULAR TO CENTERLINE OF DIAPHRAGM.

③ 1'–11" (27M); 2'–1" (36M AND MN45); 2'–5" (MN54 AND MN63); 3'–1" (82MW AND 96MW). BASED ON 3" STOOL AND 9" DECK.

④ 1'–10" (27M); 2'–0" (36M AND MN45); 2'–4" (MN54 AND MN63); 3'–0" (82MW AND 96MW). BASED ON NOTE ③.

⑤ ADD SD507E AND SD508E ONLY IF NO. OF BARS AND LENGTHS ARE INCLUDED IN BILL OF REINFORCEMENT. SPACE SD508E AT 1'–6" MAX. FOR ENTIRE LENGTH OF DIAPHRAGM. REFER TO "PART TRANSVERSE SECTION" ABOVE.

APPROVED: SEPTEMBER 22, 2011	STATE OF MINNESOTA DEPARTMENT OF TRANSPORTATION	REVISED	DETAIL NO.
Nancy Daubenberger STATE BRIDGE ENGINEER	CONCRETE END DIAPHRAGM (27M & 36M, MN45 – MN63, 82MW & 96MW PRESTRESSED CONCRETE BEAMS) (PARAPET ABUTMENT)	04–17–2013 11–06–2013	B814 (MOD.)

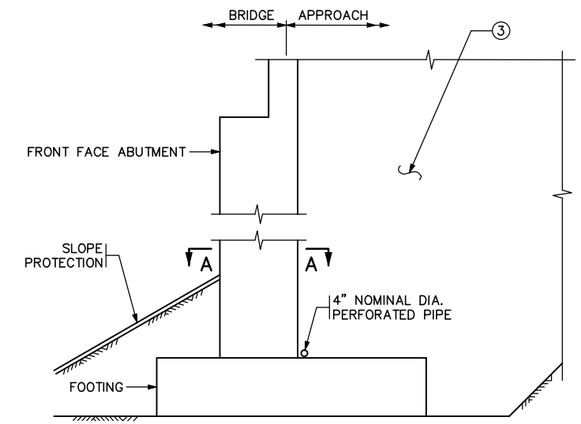

SECTION THROUGH PARAPET AND SEMI–INTEGRAL ABUTMENTS

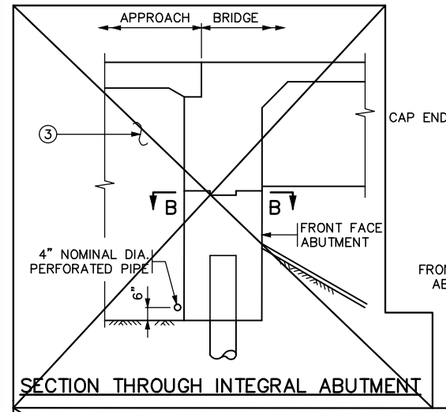

SECTION THROUGH INTEGRAL ABUTMENT

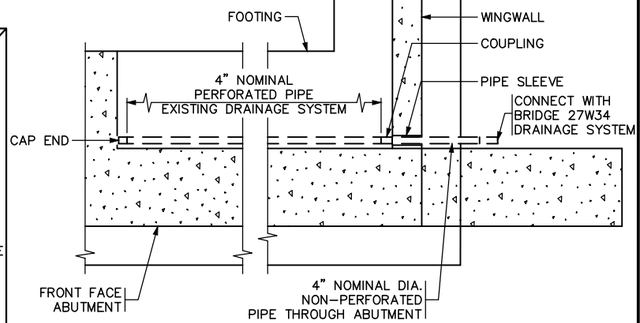

SECTION A–A

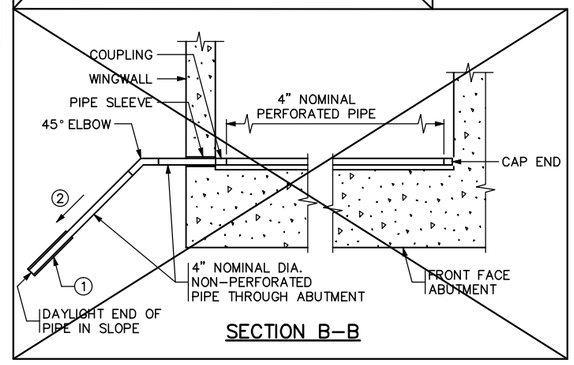

SECTION B–B

NOTES:

~~PAYMENT WILL BE INCLUDED IN THE SINGLE LUMP SUM PRICE FOR "DRAINAGE SYSTEM TYPE (B910)", INCLUDES BUT IS NOT LIMITED TO 4" DIAMETER PERFORATED AND NON–PERFORATED PIPE, ELBOWS, END CAPS, COUPLINGS, SLEEVES AND PRECAST CONCRETE HEADWALLS.~~

ALL PIPE TO COMPLY WITH SPEC. 3245.

WRAP PERFORATED PIPE WITH GEOTEXTILE PER SPEC. 3733, TYPE 1. ATTACH TO PIPE PER SPEC. 2502.

① AT CONTRACTORS OPTION, MAY TIE APPROACH PANEL DRAINAGE SYSTEM AND ABUTMENT DRAINAGE SYSTEM INTO A SINGLE PRECAST CONCRETE HEADWALL OR INTO A CATCH BASIN AS LONG AS A MINIMUM OF 1% POSITIVE SLOPE CAN BE MANTAINED.

USE PRECAST CONCRETE HEADWALL WITH RODENT SCREEN. SEE STANDARD PLATE 3131 FOR DETAILS.

② ⅛" PER FT. MINIMUM SLOPE.

③ REFER TO GRADING PLANS FOR ABUTMENT BACKFILL REQUIREMENTS.

APPROVED: JANUARY 13, 2015	STATE OF MINNESOTA DEPARTMENT OF TRANSPORTATION	REVISED	DETAIL NO. (MOD.)
Nancy Daubenberger STATE BRIDGE ENGINEER	DRAINAGE SYSTEM		B910

DRAFT-WORK IN PROCESS

NO.	DATE	BY	CHECK	DESIGN	REVISION / SUBMITTAL

DESIGNED BY: KAE CHECKED BY: MDJ
DRAWN BY: LMT CHECKED BY: MDJ

AECOM Kimley»Horn

90% SUBMISSION - 01/22/16

METROPOLITAN COUNCIL

SOUTHWEST Green Line LRT Extension

CIVIL - VOLUME 4F
TH 100 LRT BRIDGE
BRIDGE 27303
BRIDGE DETAILS 3

DISCIPLINE: STRUCTURES
SHEET NAME: CBR27303-BRG-DTL-001-3

SHEET 38 OF 52

Dec, 11 2015 11:49 am V:\3400_ADC\CAD\SEGMENT E2\PLAN SHEETS\STRUCTURES\T100-LRT\CBR27303-BRG-DTL-001.dwg By: Katie.Ellis

CONCRETE WEARING COURSE

☐ LOW SLUMP

☐ OTHER _____
TYPE OR MANUFACTURER

EXPANSION JOINTS

JOINT MANUFACTURER

MANUFACTURER'S IDENTIFICATION _____
MFR'S No. AND/OR LETTER DESIGNATION FOR JOINT USED

GLAND MANUFACTURER _____
NAME AND ADDRESS (CITY, STATE)

SIZE OF GLAND _____

MANUFACTURER'S IDENTIFICATION _____
MFR'S No. AND/OR LETTER DESIGNATION FOR GLAND USED

ELASTOMERIC BEARING PADS

PAD MANUFACTURER _____
NAME AND ADDRESS (CITY, STATE)

SPECIAL SURFACE FINISH

SYSTEM: _____ COLOR: _____

FINISHING ROADWAY FACES OF BARRIER RAILING

TYPE: _____ COLOR: _____

ANTI–GRAFFITI COATING

MANUFACTURER _____
NAME AND ADDRESS (CITY, STATE)

PRODUCT NAME: _____ LOCATION: _____

PAINT SYSTEM

Mn/DOT SPECIFICATION NUMBER _____
2478 OR 2479 OR OTHER

MANUFACTURER _____
NAME AND ADDRESS (CITY, STATE)

PRIME COAT _____
Mn/DOT MATERIAL SPECIFICATION NUMBER

INTERMEDIATE COAT _____
Mn/DOT MATERIAL SPECIFICATION NUMBER

FINISH COAT _____ _____
Mn/DOT MATERIAL SPECIFICATION NUMBER COLOR

PLAN QUALITY

RATE 1 (AGREE), 2 (NEUTRAL), OR 3 (DISAGREE, PLEASE COMMENT BELOW)

DIMENSIONING AND DETAILING ADEQUATELY DESCRIBED REQUIRED CONSTRUCTION. _____
BAR LISTS AND QUANTITIES WERE TYPICALLY COMPLETE AND FREE OF ERRORS. _____
SCALE OF DRAWINGS AND OVERALL LEGIBILITY OF LINES AND TEXT WAS GOOD. _____
(SB) SPECIAL PROVISIONS ADEQUATELY DESCRIBED SPECIAL WORK AND PAYMENT. _____

COMMENTS: _____

NUMBER OF BRIDGE
SUPPLEMENTAL AGREEMENTS: _____ COST: $ _____

LIST SIGNIFICANT ERRORS OR OMISSIONS IN PLAN DETAILS OR PAY QUANTITIES IN THE SPACE PROVIDED AT RIGHT.

BRIDGE REMOVAL / BRIDGE OPENING

NUMBER OF AND DATE OLD BRIDGE WAS REMOVED (IF APPLICABLE):

BRIDGE NUMBER _____ DATE REMOVED _____

DATE NEW BRIDGE WAS OPENED TO TRAFFIC _____

NOTIFY THE BRIDGE OFFICE BRIDGE MANAGEMENT UNIT WITH THIS INFORMATION AS SOON AS POSSIBLE. (651) 366–4557

OTHER ITEMS ①

① UTILITIES ADDED DURING CONSTRUCTION AND SPECIALTY ITEMS.

FINAL QUANTITIES ENTERED ON SCHEDULE OF QUANTITIES: YES ☐ NO ☐

SUMMARY OF SIGNIFICANT AS–BUILT CHANGES

THE AS–BUILT INFORMATION WAS ADDED TO THE PLAN BY:

_____ _____
INSPECTOR(S) SIGNATURE DATE

CHECKED BY: _____ _____
PROJECT ENGINEER/SUPERVISOR SIGNATURE DATE

AT THE TIME OF THE FINAL, THIS COMPLETED AS–BUILT BRIDGE DATA SHEET MUST BE SUBMITTED TO THE BRIDGE OFFICE – ATTN: REGIONAL CONSTRUCTION ENGINEER (MS610).

REVISION: 10–28–2008

APPROVED: SEPTEMBER 26, 2003
Daniel L Morgan
STATE BRIDGE ENGINEER

AS–BUILT DETAILS
(AS NEEDED)

DRAFT-WORK IN PROCESS FIG. 5–397.900

TITLE:	DES:	DR:	APPROVED:	BRIDGE NO.
AS–BUILT BRIDGE DATA	CHK:	CHK:		27303
	SHEET NO. 39 OF 52 SHEETS			

Dec, 15 2015 06:45 am V:\3400_ADC\CAD\SEGMENT E2\PLAN SHEETS\STRUCTURES\T100-LRT\CBR27303-BRG-DTL-002.dwg By: Katie.Ellis

CONTRACTED PROFILE

SCALE HOR: 0 50'

SCALE VER: 0 10'

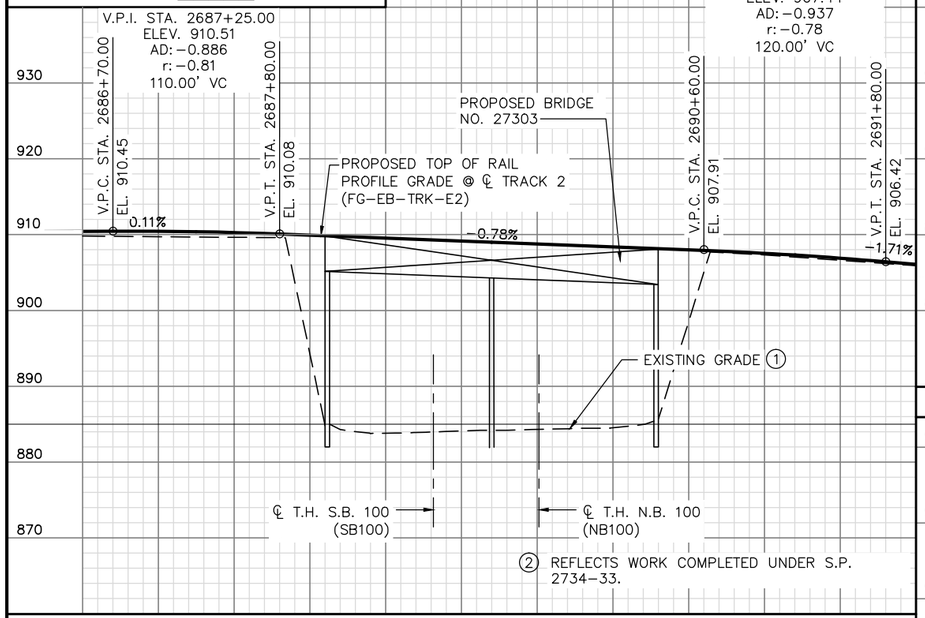

(2) REFLECTS WORK COMPLETED UNDER S.P. 2734−33.

PROFILE GRADE TOP OF RAIL @ ℄ TRACK 2 (FG−EB−TRK−E2)

PROFILE GRADE 24' LT. OF ℄ T.H. N.B. 100 (PNB100L24)

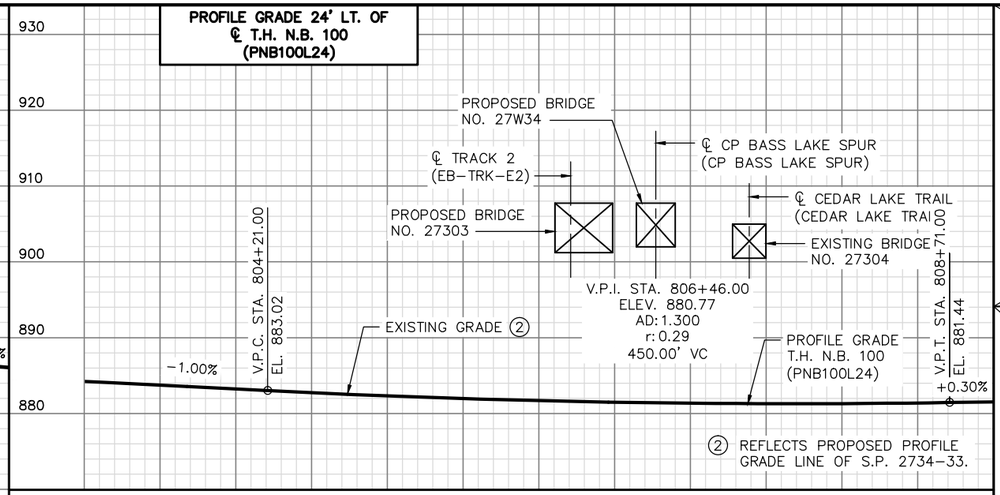

(2) REFLECTS PROPOSED PROFILE GRADE LINE OF S.P. 2734−33.

PROFILE GRADE 24' RT. OF ℄ T.H. S.B. 100 (PSB100R24)

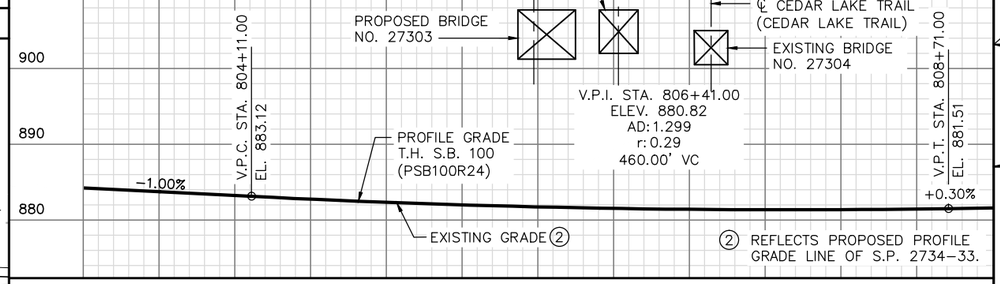

(2) REFLECTS PROPOSED PROFILE GRADE LINE OF S.P. 2734−33.

PLAT

SCALE: 0 50'

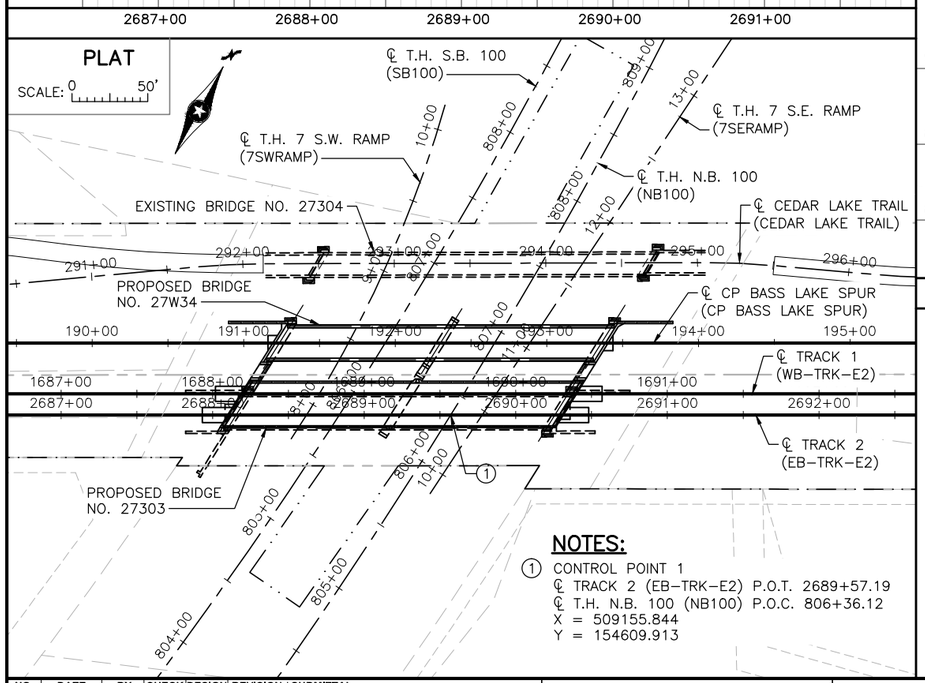

NOTES:

(1) CONTROL POINT 1
℄ TRACK 2 (EB−TRK−E2) P.O.T. 2689+57.19
℄ T.H. N.B. 100 (NB100) P.O.C. 806+36.12
X = 509155.844
Y = 154609.913

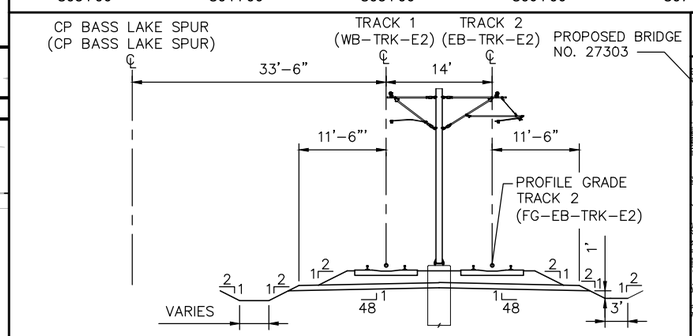

TYPICAL APPROACH SECTION T.H. 100 LRT

INDEX MAP (PARTS OF SIX SECTIONS)

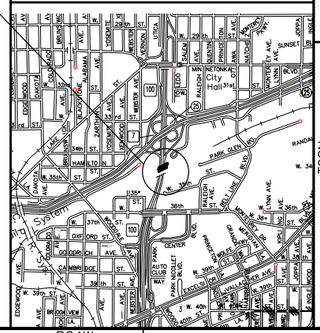

LOCATION ENGINEER'S OBSERVATIONS AT BRIDGE SITE

1. SPECIAL FEATURES: WATERFALLS, DAMS, FLOODS, ICE, DEBRIS SLIDING BANKS, RECREATIONAL BOATING.
2. OTHER BRIDGES OR CULVERTS OVER THE SAME STREAM (PARTICULARY STRUCTURES WHICH CARRY HIGH WATER WITHOUT OVERFLOW OF ROADWAY): GIVEN LOCATION, TYPE, LENGTH, HEIGHT ABOVE HIGH WATER, CROSS−SECTIONAL AREA ETC.
3. APPARENT HIGHWATER ELEVATION OBTAINED FROM:
4. OTHER DATA: APPROX. VELOCITY OF WATER AT TIME OF SURVEY.

HYDRAULIC ENGINEER'S RECOMMENDATION

DATE:

STREAM OR DITCH DESIGNATION

DRAINAGE AREA

MAX FLOOD ON RECORD

DESIGN FLOOD (YR. FREQ.): C.F.S.
HEADWATER ELEVATION: FT.
DESIGN MEAN VELOCITY THROUGH STRUCTURE F.P.S.
TOTAL STAGE INCREASE FT.
LOW MEMBER AT OR ABOVE ELEVATION FT.

WATERWAY AREA REQUIRED BELOW ELEV. = SQ. FT.
AT RIGHT ANGLES TO CHANNEL

BASIC FLOOD (100 YR. FREQ.) C.F.S.
HEADWATER ELEVATION: FT.
TOTAL STAGE INCREASE FT.
MEAN VELOCITY THROUGH STRUCTURE

FLOWLINE ELEVATION: FT. SKEW ANGLE:

ESTIMATED PRLIMINARY TOTAL SCOUR AT PIER EL. (500 OR OT YR. FREQ.)

SCOUR CONFIRMATION RECOMMENDATION

DATE:

TOTAL SCOUR AT PIER EL. (500 OR OT YR. FREQ.)
SCOUR CODE: OBTAIN FROM HYDRAULIC ENGINEER

BRIDGE SURVEY SHEETS MADE FROM 2014 SAMBATEK SURVEYS AND PROPOSED PLANS FOR S.P. 2734−33

1ST BENCH MARK (NAVD 88)
BENCHMARK ID PT. 61
ELEVATION = 914.44
X = 507459.25, Y = 153987.80
DESCRIPTION = TOP NUT HYDRANT

2ND BENCH MARK (NAVD 88)
BENCHMARK ID PT. 63
ELEVATION = 888.82
X = 511126.66, Y = 155735.94
DESCRIPTION = MAG NAIL IN BIT. ISLAND

BRIDGE SURVEY

PROPOSED BRIDGE LOCATED:
0.2 MILES SOUTH OF JCT. T.H. 7
IN ST. LOUIS PARK

SEC 6 T 28N R 24W

CITY OF ST LOUIS PARK HENNEPIN COUNTY

BRIDGE NO. 27303

DRAFT-WORK IN PROCESS

NO.	DATE	BY	CHECK	DESIGN	REVISION / SUBMITTAL

DESIGNED BY: KAE CHECKED BY: MDJ
DRAWN BY: LMT CHECKED BY: MDJ

AECOM Kimley»Horn

90% SUBMISSION - 01/22/16

METROPOLITAN COUNCIL

SOUTHWEST Green Line LRT Extension

CIVIL - VOLUME 4F
TH 100 LRT BRIDGE
BRIDGE 27303
BRIDGE SURVEY

DISCIPLINE: STRUCTURES

SHEET NAME: CBR27303-BRG-SUR-001

SHEET 40 OF 52

Dec, 11 2015 11:50 am V:\3400_ADC\CAD\SEGMENT E2\PLAN SHEETS\STRUCTURES\T100-LRT\CBR27303-BRG-SUR-001.dwg By: Katie.Ellis

℄ T.H. 7 S.W. RAMP
(7SWRAMP)

℄ T.H. S.B. 100
(SB100)

℄ T.H. N.B. 100
(NB100)

℄ T.H. 7 S.E. RAMP
(7SERAMP)

℄ CEDAR LAKE TRAIL
(CEDAR LAKE TRAIL)

℄ CP BASS LAKE SPUR
(CP BASS LAKE SPUR)

℄ TRACK 1
(WB–TRK–E2)

℄ TRACK 2
(EB–TRK–E2)

℄ PIER

℄ BRG. W. ABUT.

℄ BRG. E. ABUT.

CB–01
STA. 2688+33.59
28' LT. OF ℄ TRACK 2

B–01
STA. 2688+12.67
13' RT. OF ℄ TRACK 2

B–02
STA. 2688+92.11
55' RT. OF ℄ TRACK 2

B–03
STA. 2689+54.14
33' LT. OF ℄ TRACK 2

B–04
STA. 2690+38.42
21' LT. OF ℄ TRACK 2

CB–02A
STA. 2690+21.68
21' RT. OF ℄ TRACK 2

NOTES:

THE SUBSURFACE UTILITY INFORMATION IN THIS PLAN IS UTILITY QUALITY LEVEL D. THIS UTILITY QUALITY LEVEL WAS DETERMINED ACCORDING TO THE GUIDELINES OF CI/ASCE 38–02, ENTITLED "STANDARD GUIDELINES FOR THE COLLECTION AND DEPICTION OF EXISTING SUBSURFACE UTILITY DATA."

DRAFT-WORK IN PROCESS

NO.	DATE	BY	CHECK	DESIGN	REVISION / SUBMITTAL

DESIGNED BY: KAE | CHECKED BY: MDJ
DRAWN BY: LMT | CHECKED BY: MDJ

AECOM Kimley»Horn

90% SUBMISSION - 01/22/16

METROPOLITAN COUNCIL

SOUTHWEST Green Line LRT Extension

CIVIL - VOLUME 4F
TH 100 LRT BRIDGE
BRIDGE 27303
BRIDGE SURVEY PLAN

DISCIPLINE: STRUCTURES
SHEET NAME: CBR27303-BRG-BOR-001-1

SHEET 41 OF 52

Dec, 11 2015 11:51 am V:\3400_ADC\CAD\SEGMENT E2\PLAN SHEETS\STRUCTURES\T100-LRT\CBR27303-BRG-BOR-001.dwg By: Katie.Ellis

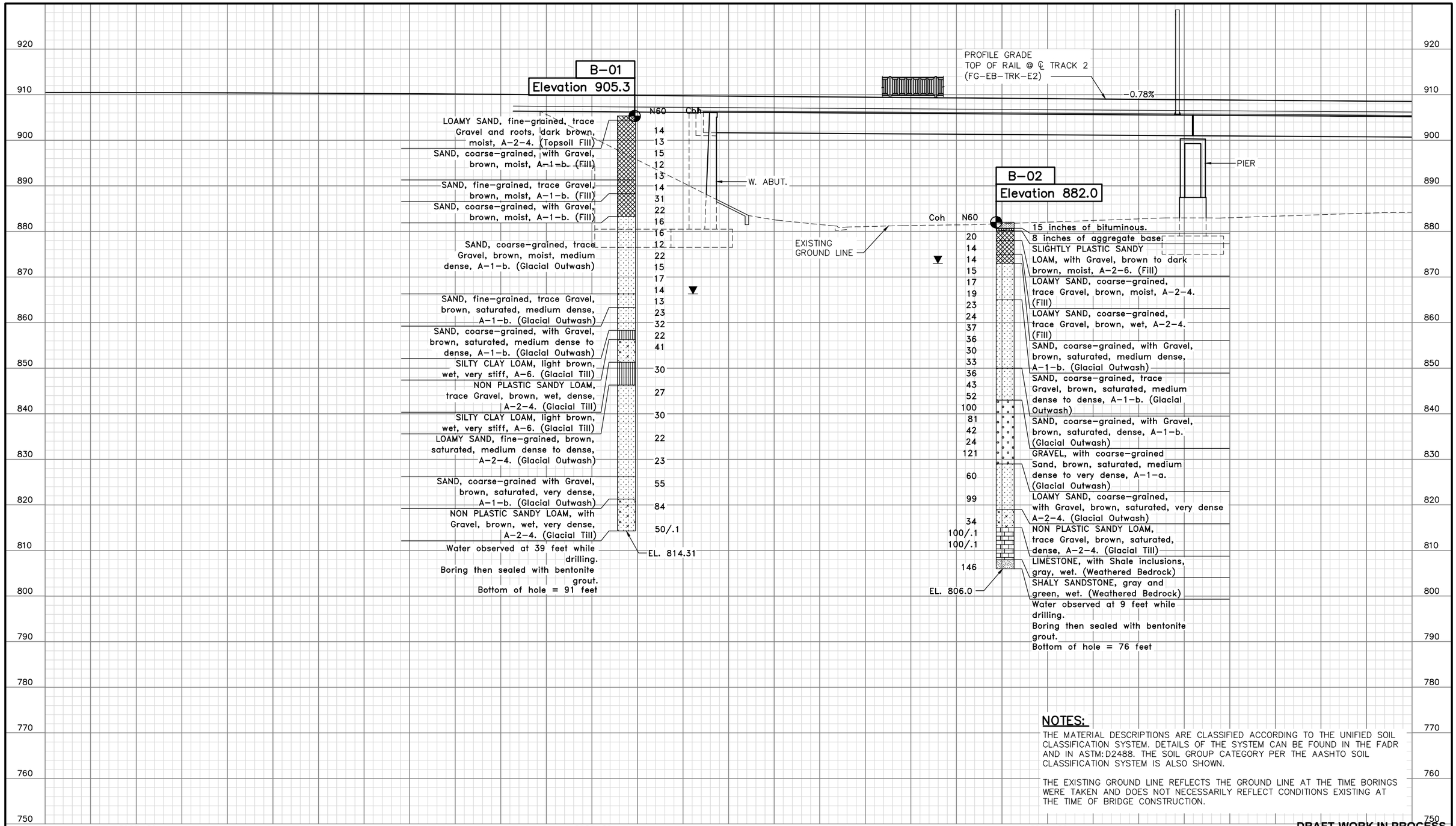

NOTES:

THE MATERIAL DESCRIPTIONS ARE CLASSIFIED ACCORDING TO THE UNIFIED SOIL CLASSIFICATION SYSTEM. DETAILS OF THE SYSTEM CAN BE FOUND IN THE FADR AND IN ASTM:D2488. THE SOIL GROUP CATEGORY PER THE AASHTO SOIL CLASSIFICATION SYSTEM IS ALSO SHOWN.

THE EXISTING GROUND LINE REFLECTS THE GROUND LINE AT THE TIME BORINGS WERE TAKEN AND DOES NOT NECESSARILY REFLECT CONDITIONS EXISTING AT THE TIME OF BRIDGE CONSTRUCTION.

DRAFT-WORK IN PROCESS

NO.	DATE	BY	CHECK	DESIGN	REVISION / SUBMITTAL

DESIGNED BY: KAE CHECKED BY: MDJ
DRAWN BY: LMT CHECKED BY: MDJ

AECOM Kimley»Horn

90% SUBMISSION - 01/22/16

METROPOLITAN COUNCIL

SOUTHWEST Green Line LRT Extension

CIVIL - VOLUME 4F
TH 100 LRT BRIDGE
BRIDGE 27303
BRIDGE SURVEY PROFILE 1

DISCIPLINE: STRUCTURES
SHEET NAME: CBR27303-BRG-BOR-002-1

SHEET 42 OF 52

Dec, 11 2015 11:53 am V:\3400_ADC\CAD\SEGMENT E2\PLAN SHEETS\STRUCTURES\T100-LRT\CBR27303-BRG-BOR-002.dwg By: Katie.Ellis

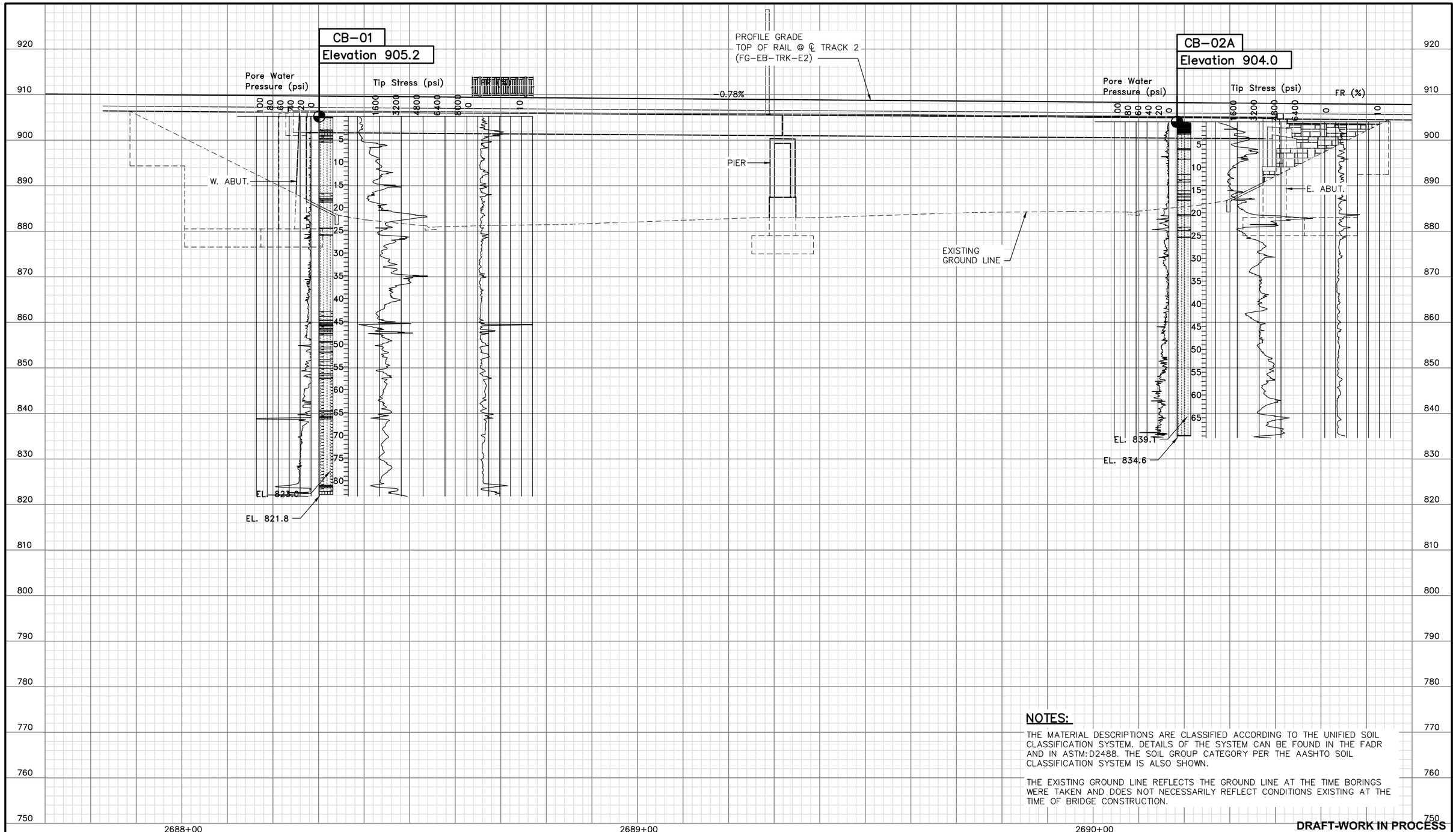

NOTES:

THE MATERIAL DESCRIPTIONS ARE CLASSIFIED ACCORDING TO THE UNIFIED SOIL CLASSIFICATION SYSTEM. DETAILS OF THE SYSTEM CAN BE FOUND IN THE FADR AND IN ASTM:D2488. THE SOIL GROUP CATEGORY PER THE AASHTO SOIL CLASSIFICATION SYSTEM IS ALSO SHOWN.

THE EXISTING GROUND LINE REFLECTS THE GROUND LINE AT THE TIME BORINGS WERE TAKEN AND DOES NOT NECESSARILY REFLECT CONDITIONS EXISTING AT THE TIME OF BRIDGE CONSTRUCTION.

DRAFT-WORK IN PROCESS

NO.	DATE	BY	CHECK	DESIGN	REVISION / SUBMITTAL

DESIGNED BY: KAE CHECKED BY: MDJ
DRAWN BY: LMT CHECKED BY: MDJ

AECOM Kimley»Horn

90% SUBMISSION - 01/22/16

METROPOLITAN COUNCIL

SOUTHWEST Green Line LRT Extension

CIVIL - VOLUME 4F
TH 100 LRT BRIDGE
BRIDGE 27303
BRIDGE SURVEY PROFILE 2

DISCIPLINE: STRUCTURES
SHEET NAME: CBR27303-BRG-BOR-002-2

SHEET 43 OF 52

Dec, 11 2015 11:55 am V:\3400_ADC\CAD\SEGMENT E2\PLAN SHEETS\STRUCTURES\T100-LRT\CBR27303-BRG-BOR-002.dwg By: Katie.Ellis

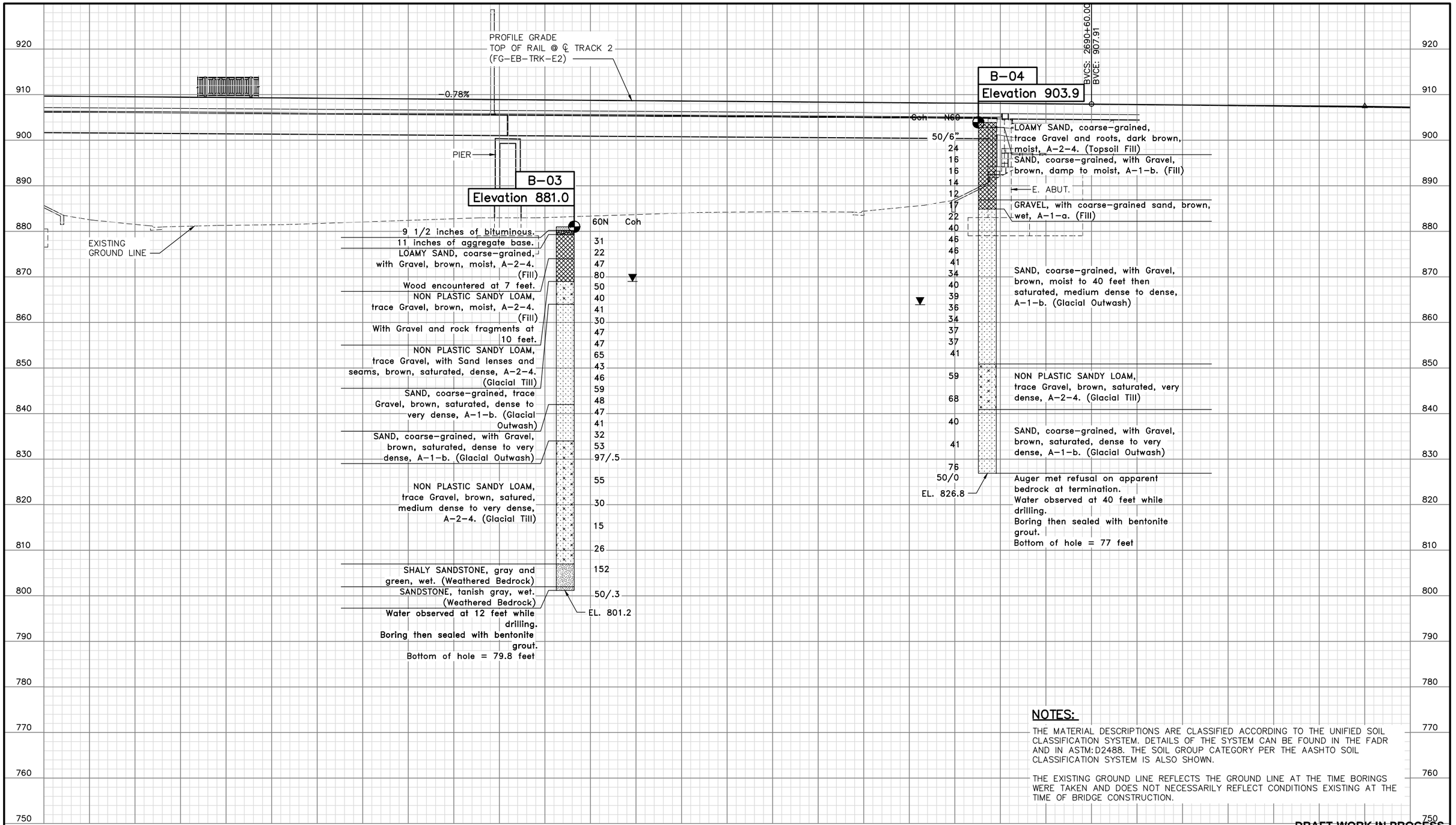

NOTES:

THE MATERIAL DESCRIPTIONS ARE CLASSIFIED ACCORDING TO THE UNIFIED SOIL CLASSIFICATION SYSTEM. DETAILS OF THE SYSTEM CAN BE FOUND IN THE FADR AND IN ASTM:D2488. THE SOIL GROUP CATEGORY PER THE AASHTO SOIL CLASSIFICATION SYSTEM IS ALSO SHOWN.

THE EXISTING GROUND LINE REFLECTS THE GROUND LINE AT THE TIME BORINGS WERE TAKEN AND DOES NOT NECESSARILY REFLECT CONDITIONS EXISTING AT THE TIME OF BRIDGE CONSTRUCTION.

DRAFT-WORK IN PROCESS

NO.	DATE	BY	CHECK	DESIGN	REVISION / SUBMITTAL

DESIGNED BY: KAE CHECKED BY: MDJ
DRAWN BY: LMT CHECKED BY: MDJ

AECOM Kimley»Horn

90% SUBMISSION - 01/22/16

METROPOLITAN COUNCIL

SOUTHWEST Green Line LRT Extension

CIVIL - VOLUME 4F
TH 100 LRT BRIDGE
BRIDGE 27303
BRIDGE SURVEY PROFILE 3

DISCIPLINE: STRUCTURES
SHEET NAME: CBR27303-BRG-BOR-002-3

SHEET 44 OF 52

Dec, 11 2015 11:56 am v:\3400_ADC\CAD\SEGMENT E2\PLAN SHEETS\STRUCTURES\T100-LRT\CBR27303-BRG-BOR-002.dwg By: Katie.Ellis

STAGE 1A TRAFFIC

1. T.H. 100 TO REMAIN OPEN TO TRAFFIC.
2. CP RAIL OPERATIONS ON EXISTING BRIDGE NO. 27303.

STAGE 1A CONSTRUCTION

1. CONSTRUCT & BACKFILL BRIDGE NO. 27W34 ABUTMENTS AND INFILL WALL.
2. CONSTRUCT CP RAIL BASS LAKE SPUR.

℄ T.H. S.B. 100 (SB100)

℄ T.H. N.B. 100 (NB100)

ROW

℄ CEDAR LAKE TRAIL (CEDAR LAKE TRAIL)

EXISTING BRIDGE NO. 27304

292+00

293+00

294+00

295+00

807+00

808+00

BRIDGE NO. 27W34 W. ABUTMENT

TEMPORARY BARRIERS PLACED BEHIND CURB (TYP.)

BRIDGE NO. 27W34 E. ABUTMENT

℄ CP BASS LAKE SPUR (CP BASS LAKE SPUR)

191+00

192+00

193+00

194+00

807+00

BRIDGE NO. 27303 INFILL WALL

TEMPORARY SHORING

BRIDGE NO. 27303 INFILL WALL

TEMPORARY SHORING

℄ EXISTING CP MAINLINE (MAINLINE)

806+00

EXISTING BRIDGE NO. 27303 W. ABUTMENT AND WINGWALL

EXISTING BRIDGE NO. 27303 E. ABUTMENT AND WINGWALL

EXISTING BRIDGE NO. 27303 SUPERSTRUCTURE

806+00

805+00

806+00

EXISTING ON-RAMP

12' EXISTING THRU LANE

12' EXISTING THRU LANE

12' EXISTING THRU LANE

12' EXISTING THRU LANE

12' EXISTING THRU LANE

12' EXISTING THRU LANE

EXISTING OFF RAMP

N

NOTE:

CONTRACTOR TO REMAIN IN EXISTING ROW.

DRAFT-WORK IN PROCESS

NO.	DATE	BY	CHECK	DESIGN	REVISION / SUBMITTAL

DESIGNED BY: KAE CHECKED BY: MDJ

DRAWN BY: LMT CHECKED BY: MDJ

AECOM Kimley»Horn

90% SUBMISSION - 01/22/16

METROPOLITAN COUNCIL

SOUTHWEST Green Line LRT Extension

CIVIL - VOLUME 4F
TH 100 LRT BRIDGE
BRIDGE 27303
STAGING PLAN 1

DISCIPLINE: STRUCTURES

SHEET NAME: CBR27303-BRG-STG-001-1

SHEET 45 OF 52

Dec, 11 2015 11:56 am V:\3400_ADC\CAD\SEGMENT E2\PLAN SHEETS\STRUCTURES\T100-LRT\CBR27303-BRG-STG-001.dwg By: Katie.Ellis

STAGE 1B TRAFFIC

1. T.H. 100 INSIDE LANE TEMPORARY CLOSURE.
2. CP RAIL OPERATIONS ON EXISTING BRIDGE NO. 27303.

STAGE 1B CONSTRUCTION

1. CONSTRUCT REMAINING PORTIONS OF BRIDGE NO. 27W34 PIER.
2. CONSTRUCT CP RAIL BASS LAKE SPUR.

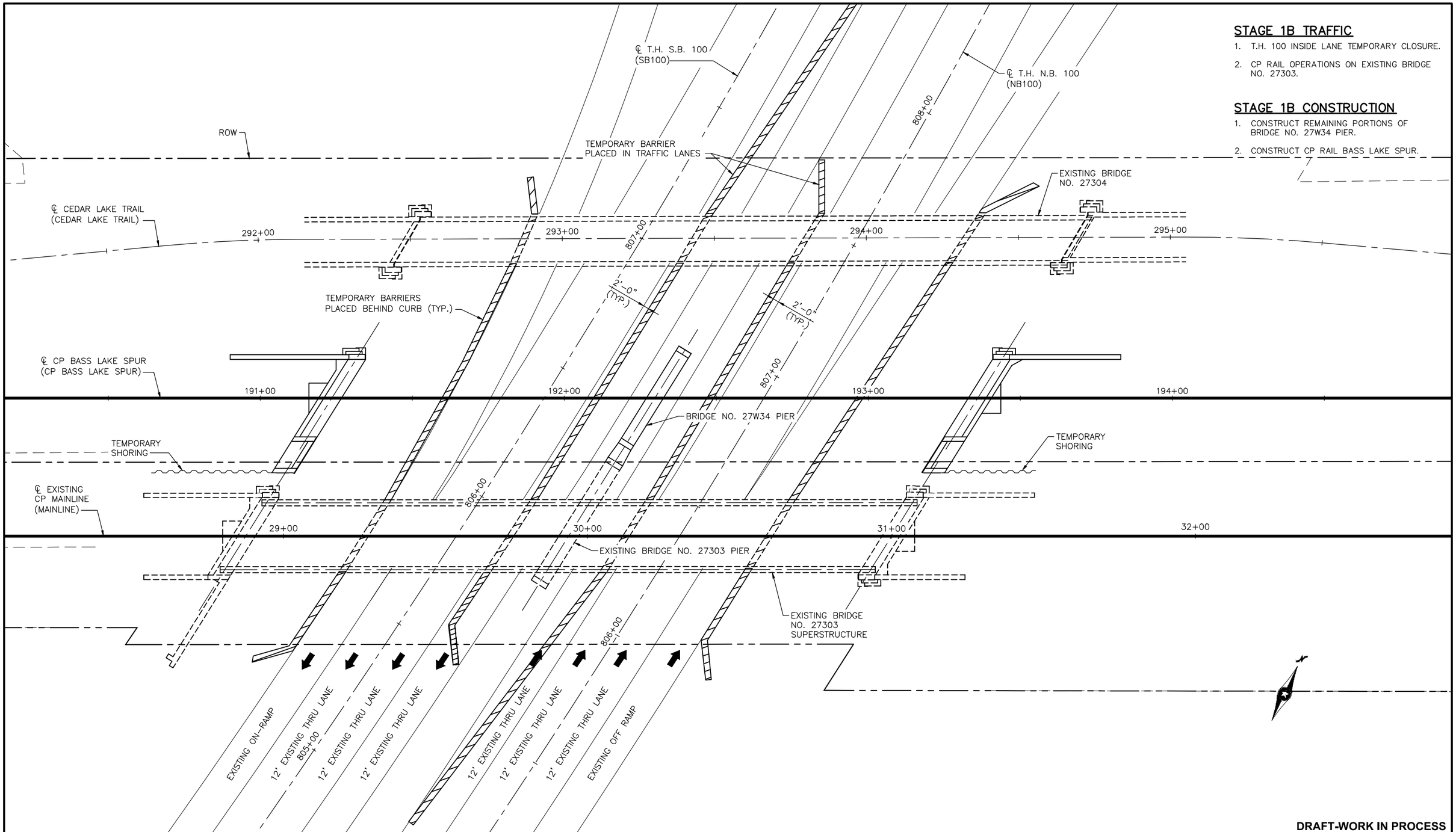

DRAFT-WORK IN PROCESS

NO.	DATE	BY	CHECK	DESIGN	REVISION / SUBMITTAL

DESIGNED BY: KAE | CHECKED BY: MDJ
DRAWN BY: LMT | CHECKED BY: MDJ

AECOM Kimley»Horn

90% SUBMISSION - 01/22/16

METROPOLITAN COUNCIL

SOUTHWEST Green Line LRT Extension

CIVIL - VOLUME 4F
TH 100 LRT BRIDGE
BRIDGE 27303
STAGING PLAN 2

DISCIPLINE: STRUCTURES

SHEET NAME: CBR27303-BRG-STG-001-2

SHEET 46 OF 52

Dec, 11 2015 11:57 am V:\3400_ADC\CAD\SEGMENT E2\PLAN SHEETS\STRUCTURES\T100-LRT\CBR27303-BRG-STG-001.dwg By: Katie.Ellis

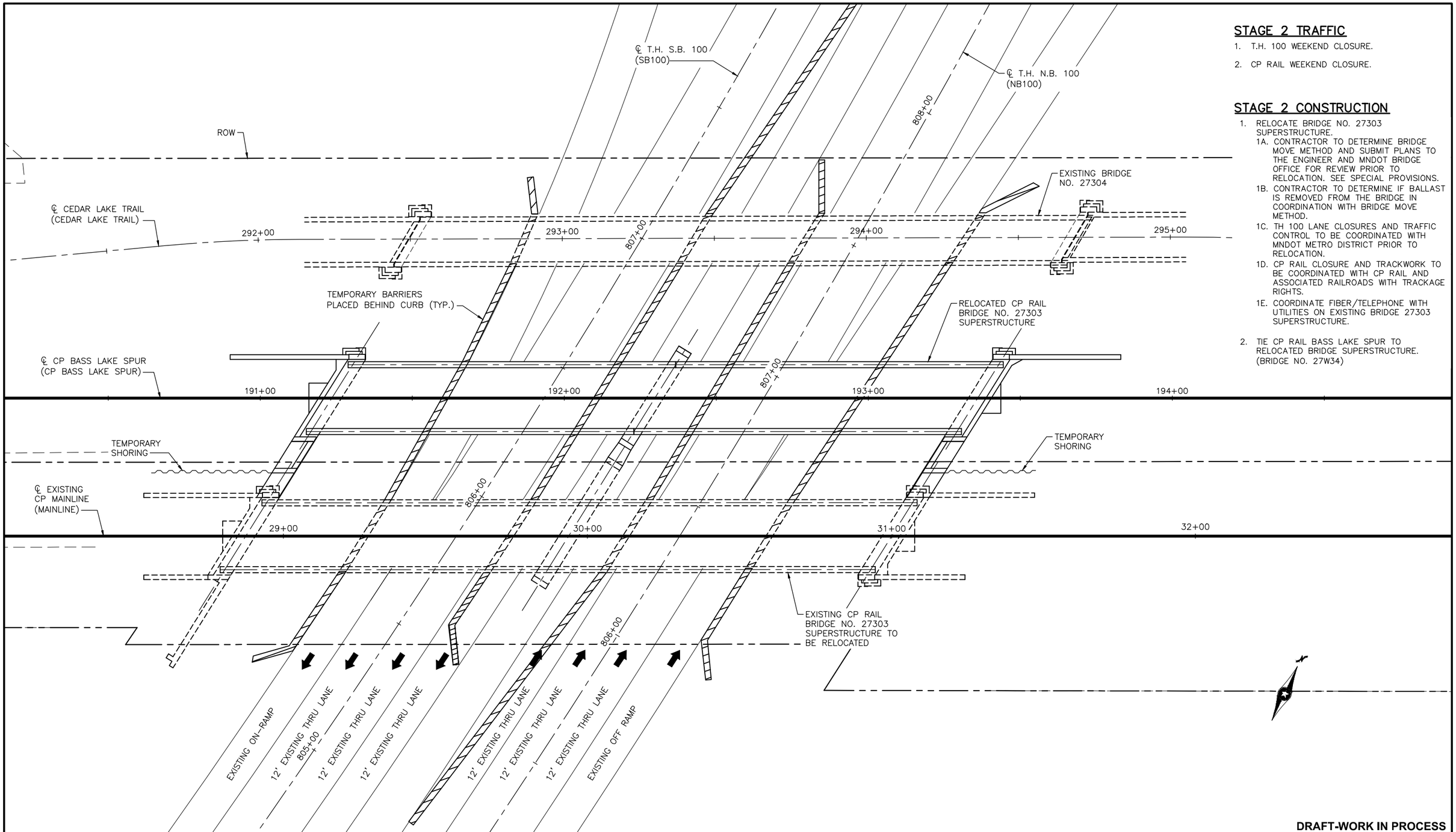

STAGE 2 TRAFFIC

1. T.H. 100 WEEKEND CLOSURE.
2. CP RAIL WEEKEND CLOSURE.

STAGE 2 CONSTRUCTION

1. RELOCATE BRIDGE NO. 27303 SUPERSTRUCTURE.
   - 1A. CONTRACTOR TO DETERMINE BRIDGE MOVE METHOD AND SUBMIT PLANS TO THE ENGINEER AND MNDOT BRIDGE OFFICE FOR REVIEW PRIOR TO RELOCATION. SEE SPECIAL PROVISIONS.
   - 1B. CONTRACTOR TO DETERMINE IF BALLAST IS REMOVED FROM THE BRIDGE IN COORDINATION WITH BRIDGE MOVE METHOD.
   - 1C. TH 100 LANE CLOSURES AND TRAFFIC CONTROL TO BE COORDINATED WITH MNDOT METRO DISTRICT PRIOR TO RELOCATION.
   - 1D. CP RAIL CLOSURE AND TRACKWORK TO BE COORDINATED WITH CP RAIL AND ASSOCIATED RAILROADS WITH TRACKAGE RIGHTS.
   - 1E. COORDINATE FIBER/TELEPHONE WITH UTILITIES ON EXISTING BRIDGE 27303 SUPERSTRUCTURE.
2. TIE CP RAIL BASS LAKE SPUR TO RELOCATED BRIDGE SUPERSTRUCTURE. (BRIDGE NO. 27W34)

DRAFT-WORK IN PROCESS

NO.	DATE	BY	CHECK	DESIGN	REVISION / SUBMITTAL

DESIGNED BY: KAE | CHECKED BY: MDJ
DRAWN BY: LMT | CHECKED BY: MDJ

AECOM Kimley»Horn

90% SUBMISSION - 01/22/16

METROPOLITAN COUNCIL

SOUTHWEST Green Line LRT Extension

CIVIL - VOLUME 4F
TH 100 LRT BRIDGE
BRIDGE 27303
STAGING PLAN 3

DISCIPLINE: STRUCTURES
SHEET NAME: CBR27303-BRG-STG-001-3

SHEET 47 OF 52

Dec, 11 2015 11:57 am v:\3400_ADC\CAD\SEGMENT E2\PLAN SHEETS\STRUCTURES\T100-LRT\CBR27303-BRG-STG-001.dwg By: Katie.Ellis

STAGE 3 TRAFFIC

1. T.H. 100 INSIDE LANE TEMPORARY CLOSURE.
2. CP RAIL OPERATIONS ON BRIDGE NO. 27W34.

STAGE 3 CONSTRUCTION

1. REMOVE PREVIOUS CP MAINLINE.
2. MODIFY BRIDGE NO. 27303 ABUTMENT AND PIER BEAM SEATS FOR LRT BRIDGE SUPERSTRUCTURE.

℄ T.H. S.B. 100 (SB100)

℄ T.H. N.B. 100 (NB100)

ROW

TEMPORARY BARRIERS PLACED IN TRAFFIC LANES

EXISTING BRIDGE NO. 27304

℄ CEDAR LAKE TRAIL (CEDAR LAKE TRAIL)

292+00 293+00 294+00 295+00

807+00 808+00

TEMPORARY BARRIERS PLACED BEHIND CURB (TYP.)

BRIDGE NO. 27W34

℄ CP BASS LAKE SPUR (CP BASS LAKE SPUR)

191+00 192+00 193+00 194+00

807+00

TEMPORARY SHORING

TEMPORARY SHORING

℄ TRACK 1 (WB–TRK–E2)

1688+00 1689+00 1690+00 1691+00 1692+00

806+00

BRIDGE NO. 27303 W. ABUTMENT

BRIDGE NO. 27303 PIER

2688+00 2689+00 2690+00 2691+00 2692+00

BRIDGE NO. 27303 E. ABUTMENT

℄ TRACK 2 (EB–TRK–E2)

EXISTING ON–RAMP

12' EXISTING THRU LANE

805+00

12' EXISTING THRU LANE

12' EXISTING THRU LANE

12' EXISTING THRU LANE

806+00

12' EXISTING THRU LANE

12' EXISTING THRU LANE

EXISTING OFF RAMP

N

DRAFT-WORK IN PROCESS

NO.	DATE	BY	CHECK	DESIGN	REVISION / SUBMITTAL

DESIGNED BY: KAE CHECKED BY: MDJ

DRAWN BY: LMT CHECKED BY: MDJ

AECOM Kimley»Horn

90% SUBMISSION - 01/22/16

METROPOLITAN COUNCIL

SOUTHWEST Green Line LRT Extension

CIVIL - VOLUME 4F
TH 100 LRT BRIDGE
BRIDGE 27303
STAGING PLAN 4

DISCIPLINE: STRUCTURES

SHEET NAME: CBR27303-BRG-STG-001-4

SHEET 48 OF 52

Dec, 11 2015 11:57 am V:\3400_ADC\CAD\SEGMENT E2\PLAN SHEETS\STRUCTURES\T100-LRT\CBR27303-BRG-STG-001.dwg By: Katie.Ellis

STAGE 4 TRAFFIC

1. T.H. 100 NIGHT OR WEEKEND CLOSURE.
2. CP RAIL OPERATIONS ON BRIDGE NO. 27W34.

STAGE 4 CONSTRUCTION

1. ERECT BRIDGE NO. 27303 BEAMS.

℄ T.H. S.B. 100 (SB100)

℄ T.H. N.B. 100 (NB100)

808+00

ROW

EXISTING BRIDGE NO. 27304

℄ CEDAR LAKE TRAIL (CEDAR LAKE TRAIL)

292+00 293+00 807+00 294+00 295+00

BRIDGE NO. 27W34

℄ CP BASS LAKE SPUR (CP BASS LAKE SPUR)

191+00 192+00 807+00 193+00 194+00

℄ TRACK 1 (WB–TRK–E2)

1688+00 806+00 1689+00 1690+00 1691+00 1692+00

2688+00 2689+00 2690+00 2691+00 2692+00

℄ TRACK 2 (EB–TRK–E2)

BRIDGE NO. 27303 BEAM (TYP.)

806+00

EXISTING ON–RAMP

12' EXISTING THRU LANE

805+00

12' EXISTING THRU LANE

12' EXISTING THRU LANE

12' EXISTING THRU LANE

12' EXISTING THRU LANE

12' EXISTING THRU LANE

12' EXISTING THRU LANE

EXISTING OFF RAMP

DRAFT-WORK IN PROCESS

NO.	DATE	BY	CHECK	DESIGN	REVISION / SUBMITTAL

DESIGNED BY: KAE CHECKED BY: MDJ

DRAWN BY: LMT CHECKED BY: MDJ

AECOM Kimley»Horn

90% SUBMISSION - 01/22/16

METROPOLITAN COUNCIL

SOUTHWEST Green Line LRT Extension

CIVIL - VOLUME 4F
TH 100 LRT BRIDGE
BRIDGE 27303
STAGING PLAN 5

DISCIPLINE: STRUCTURES

SHEET NAME: CBR27303-BRG-STG-001-5

SHEET 49 OF 52

Dec, 11 2015 11:57 am V:\3400_ADC\CAD\SEGMENT E2\PLAN SHEETS\STRUCTURES\T100-LRT\CBR27303-BRG-STG-001.dwg By: Katie.Ellis

STAGE 5 TRAFFIC

1. T.H. 100 LANES REOPENED; TEMPORARY LANE CLOSURES FOR CONSTRUCTION ACTIVITIES.
2. TEMPORARY CLOSURE OF T.H. 100 REQUIRED FOR CONCRETE PLACEMENT OVER ROADWAY.

STAGE 5 CONSTRUCTION

1. CONSTRUCT BRIDGE NO. 27303 SUPERSTRUCTURE.
2. BRIDGE NO. 27303 AND BRIDGE NO. 27W34 COMPLETED.

℄ T.H. S.B. 100 (SB100)

℄ T.H. N.B. 100 (NB100)

808+00

ROW

EXISTING BRIDGE NO. 27304

℄ CEDAR LAKE TRAIL (CEDAR LAKE TRAIL)

292+00 293+00 807+00 294+00 295+00

BRIDGE NO. 27W34

℄ CP BASS LAKE SPUR (CP BASS LAKE SPUR)

191+00 192+00 807+00 193+00 194+00

℄ TRACK 1 (WB–TRK–E2)

1688+00 806+00 1689+00 1690+00 1691+00 1692+00

2688+00 2689+00 2690+00 2691+00 2692+00

℄ TRACK 2 (EB–TRK–E2)

BRIDGE NO. 27303

806+00

EXISTING ON–RAMP

12' EXISTING THRU LANE

805+00

12' EXISTING THRU LANE

12' EXISTING THRU LANE

12' EXISTING THRU LANE

12' EXISTING THRU LANE

12' EXISTING THRU LANE

12' EXISTING THRU LANE

EXISTING OFF RAMP

DRAFT-WORK IN PROCESS

NO.	DATE	BY	CHECK	DESIGN	REVISION / SUBMITTAL

DESIGNED BY: KAE CHECKED BY: MDJ

DRAWN BY: LMT CHECKED BY: MDJ

AECOM Kimley»Horn

90% SUBMISSION - 01/22/16

METROPOLITAN COUNCIL

SOUTHWEST Green Line LRT Extension

CIVIL - VOLUME 4F
TH 100 LRT BRIDGE
BRIDGE 27303
STAGING PLAN 6

DISCIPLINE: STRUCTURES

SHEET NAME: CBR27303-BRG-STG-001-6

SHEET 50 OF 52

Dec, 11 2015 11:57 am V:\3400_ADC\CAD\SEGMENT E2\PLAN SHEETS\STRUCTURES\T100-LRT\CBR27303-BRG-STG-001.dwg By: Katie.Ellis

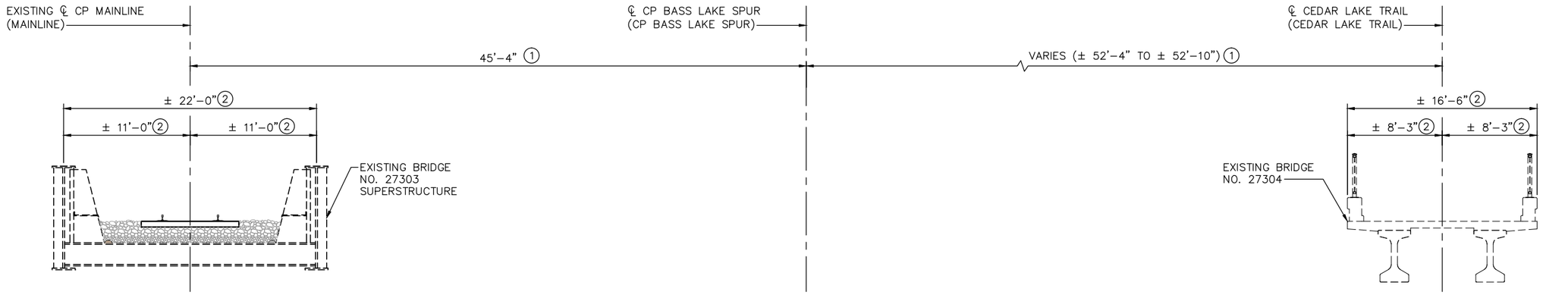

STAGE 1 CROSS SECTION

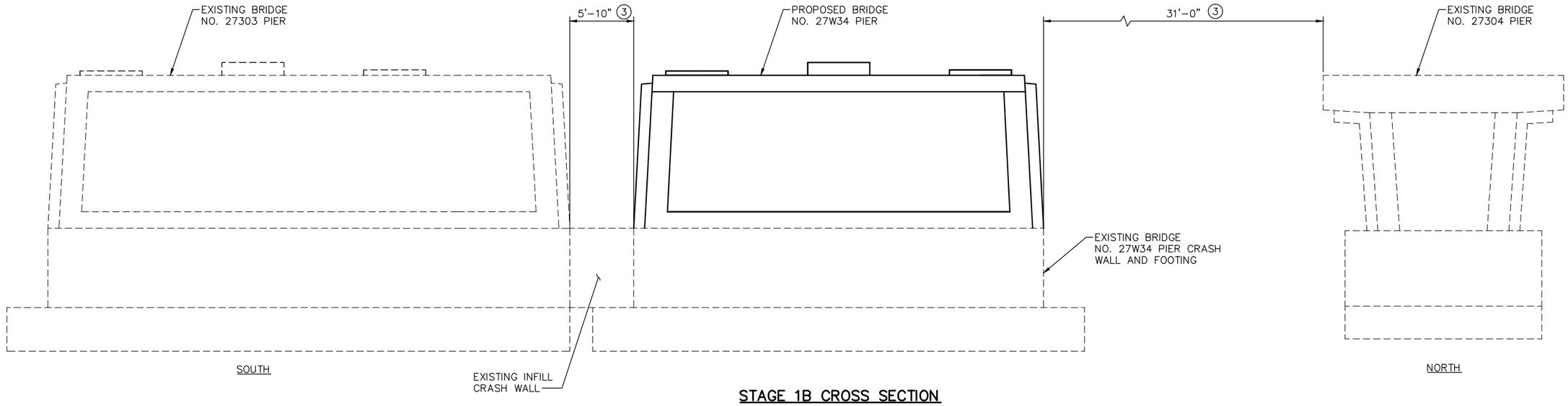

STAGE 1B CROSS SECTION

NOTES:

(1) DIMENSION MEASURED PERPENDICULAR TO ℄ CP BASS LAKE SPUR.

(2) DIMENSION MEASURED PERPENDICULAR TO SUPERSTRUCTURE ALIGNMENT.

(3) DIMENSION MEASURED ALONG MEDIAN T.H. 100.

DRAFT-WORK IN PROCESS

NO.	DATE	BY	CHECK	DESIGN	REVISION / SUBMITTAL

DESIGNED BY: KAE | CHECKED BY: MDJ
DRAWN BY: LMT | CHECKED BY: MDJ

AECOM Kimley»Horn

90% SUBMISSION - 01/22/16

METROPOLITAN COUNCIL

SOUTHWEST Green Line LRT Extension

CIVIL - VOLUME 4F
TH 100 LRT BRIDGE
BRIDGE 27303
STAGING PLAN 7

DISCIPLINE: STRUCTURES

SHEET NAME: CBR27303-BRG-STG-001-7

SHEET 51 OF 52

Dec, 11 2015 11:57 am V:\3400_ADC\CAD\SEGMENT E2\PLAN SHEETS\STRUCTURES\T100-LRT\CBR27303-BRG-STG-001.dwg By: Katie.Ellis

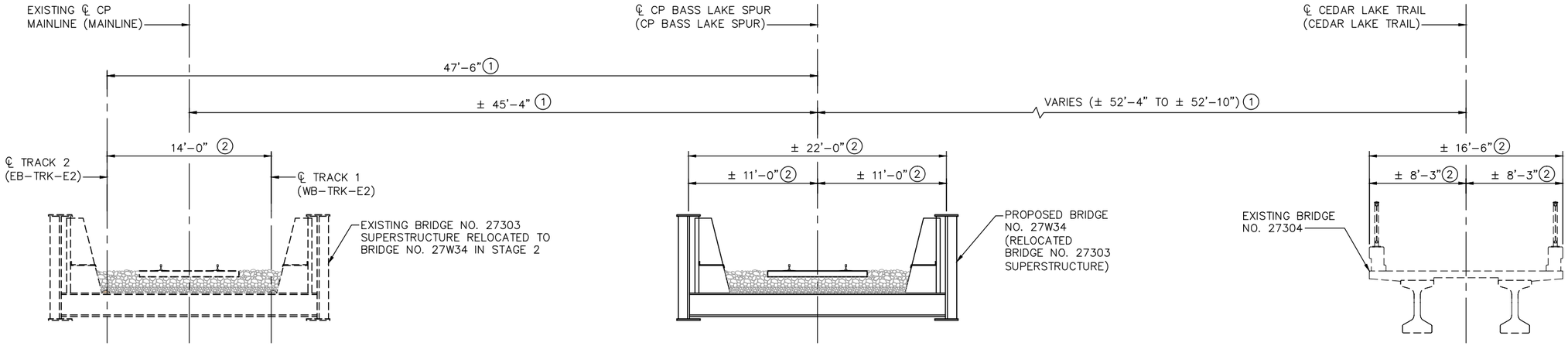

STAGE 2 CROSS SECTION

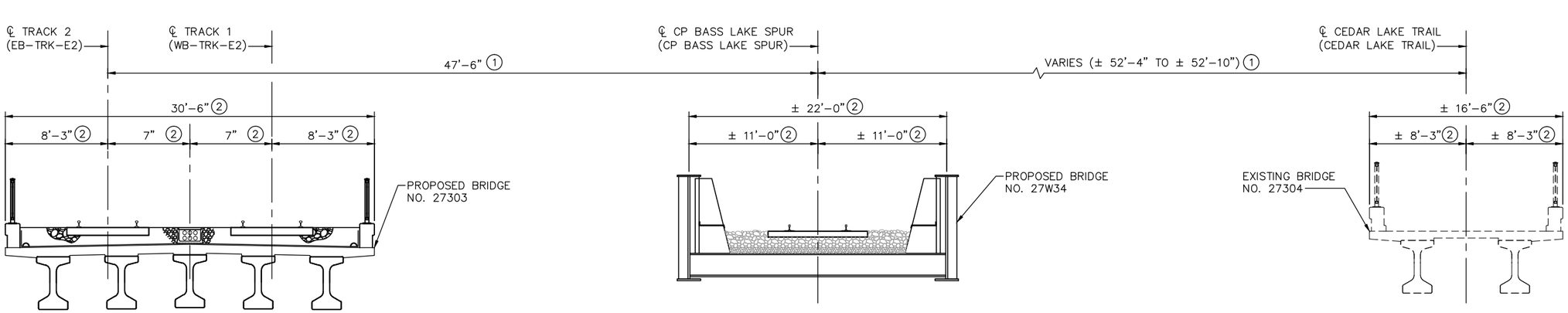

TYPICAL SECTION – FINAL CONDITION

NOTES:

(1) DIMENSION MEASURED PERPENDICULAR TO ℄ CP BASS LAKE SPUR.

(2) DIMENSION MEASURED PERPENDICULAR TO SUPERSTRUCTURE ALIGNMENT.

DRAFT-WORK IN PROCESS

NO.	DATE	BY	CHECK	DESIGN	REVISION / SUBMITTAL

DESIGNED BY: KAE CHECKED BY: MDJ
DRAWN BY: LMT CHECKED BY: MDJ

AECOM Kimley»Horn

90% SUBMISSION - 01/22/16

METROPOLITAN COUNCIL

SOUTHWEST Green Line LRT Extension

CIVIL - VOLUME 4F
TH 100 LRT BRIDGE
BRIDGE 27303
STAGING PLAN 8

DISCIPLINE: STRUCTURES

SHEET NAME: CBR27303-BRG-STG-001-8

SHEET 52 OF 52

Dec, 11 2015 11:57 am V:\3400_ADC\CAD\SEGMENT E2\PLAN SHEETS\STRUCTURES\T100-LRT\CBR27303-BRG-STG-001.dwg By: Katie.Ellis

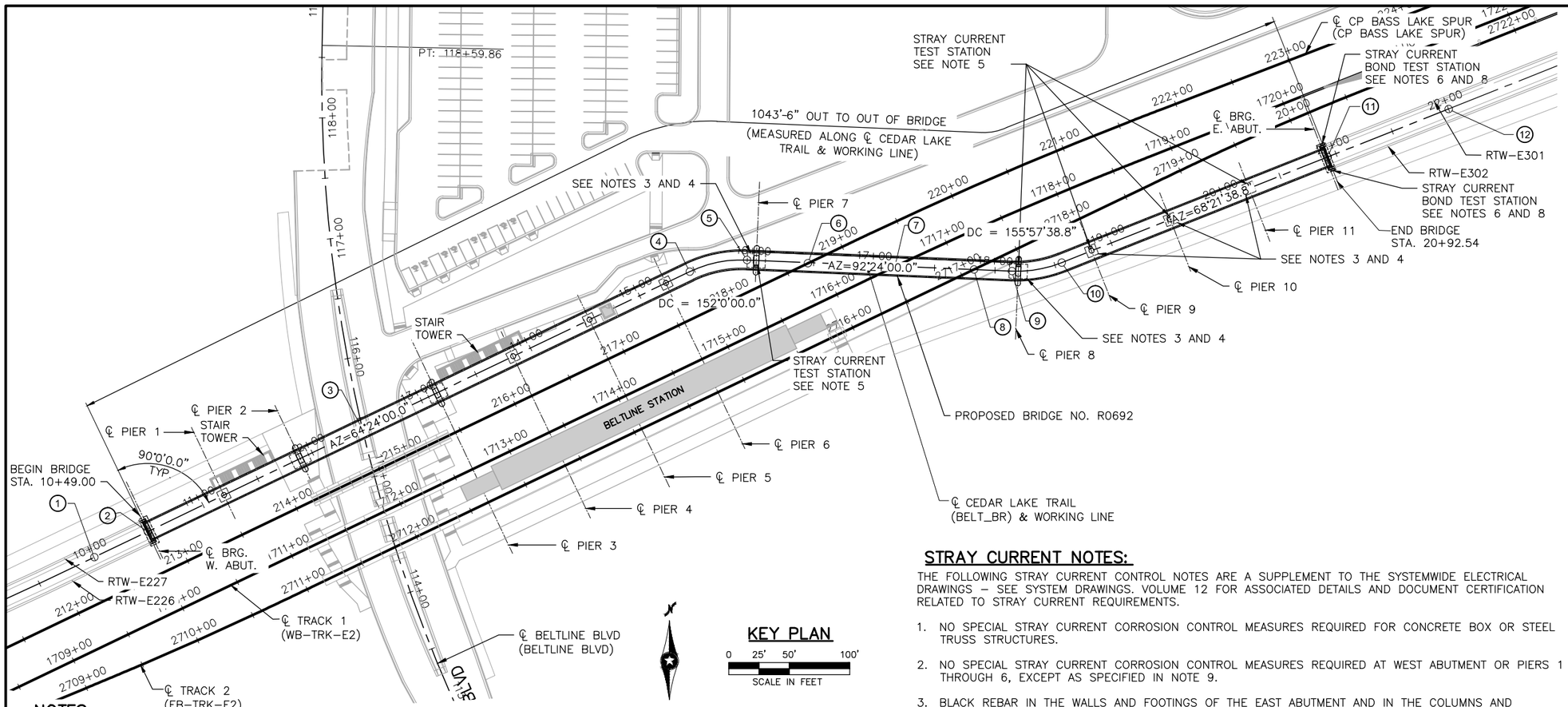

NOTES:

SEE BRIDGE SURVEY SHEET FOR IN PLACE UTILITIES

1. ℄ CEDAR LAKE TRAIL (CEDAR LAKE LRT TRAIL) STA. 313+30.67
   = ℄ CEDAR LAKE TRAIL (BELT_BR) STA. 10+00.00
   X = 510918.754
   Y = 155547.147
2. BEGIN BRIDGE
   ℄ CEDAR LAKE TRAIL (BELT_BR) STA. 10+49.00
   X = 510962.944
   Y = 155568.319
3. ℄ CEDAR LAKE TRAIL (BELT_BR) STA. 12+45.92
   ℄ BELTLINE BLVD (BELTLINE BLVD) STA. 115+40.81
   X = 511140.537
   Y = 155653.408
   T.T.C.= 77°23'37.9"
4. P.C. STA. 15+45.78
   X = 511410.958
   Y = 155782.972
5. P.T. STA. 15+94.65
   X = 511458.354
   Y = 155792.701
6. ℄ CEDAR LAKE TRAIL (BELT_BR) STA. 16+46.40
   ℄ CP BASS LAKE SPUR (CP BASS LAKE SPUR) STA. 218+69.91
   X = 511510.058
   Y = 155790.534
   ∠ = 28°0'00.0"
7. ℄ CEDAR LAKE TRAIL (BELT_BR) STA. 17+17.83
   ℄ TRACK 1 (WB–TRK–E2) STA. 1716+53.85
   X = 511581.426
   Y = 155787.543
   T.T.C.= 27°40'39.9"
8. CONTROL POINT
   ℄ CEDAR LAKE TRAIL (BELT_BR) STA. 17+82.46
   ℄ TRACK 2 (EB–TRK–E2) STA. 2717+10.92
   X = 511645.996
   Y = 155784.837
   ∠ = 28°0'00.0"
9. P.T. STA. 18+13.95
   X = 511677.457
   Y = 155783.518
10. P.T. STA. 18+55.90
    X = 511718.521
    Y = 155790.478
11. END BRIDGE R0692
    ℄ CEDAR LAKE TRAIL (BELT_BR) STA. 20+92.54
    X = 511938.484
    Y = 155877.741
12. ℄ CEDAR LAKE TRAIL (BELT_BR) STA. 22+00.00
    = ℄ CEDAR LAKE TRAIL (CEDAR LAKE LRT TRAIL) STA. 325+30.67
    X = 512038.367
    Y = 155917.367

STRAY CURRENT NOTES:

THE FOLLOWING STRAY CURRENT CONTROL NOTES ARE A SUPPLEMENT TO THE SYSTEMWIDE ELECTRICAL DRAWINGS – SEE SYSTEM DRAWINGS. VOLUME 12 FOR ASSOCIATED DETAILS AND DOCUMENT CERTIFICATION RELATED TO STRAY CURRENT REQUIREMENTS.

1. NO SPECIAL STRAY CURRENT CORROSION CONTROL MEASURES REQUIRED FOR CONCRETE BOX OR STEEL TRUSS STRUCTURES.
2. NO SPECIAL STRAY CURRENT CORROSION CONTROL MEASURES REQUIRED AT WEST ABUTMENT OR PIERS 1 THROUGH 6, EXCEPT AS SPECIFIED IN NOTE 9.
3. BLACK REBAR IN THE WALLS AND FOOTINGS OF THE EAST ABUTMENT AND IN THE COLUMNS AND FOOTINGS FOR PIERS 7 THROUGH 11 SHALL BE MADE ELECTRICALLY CONTINUOUS WITHIN WALLS, FOOTINGS AND COLUMNS. SEE DETAILS ON SHEET E0–SYS–CORR–DTL–001.
4. H–PILES IN THE EAST ABUTMENT AND PIERS 7 THROUGH 11 FOOTINGS SHALL BE MADE ELECTRICALLY CONTINUOUS WITH WELDED REBAR IN FOOTINGS. SEE DETAILS ON DWG E0–SYS–CORR–DTL–008.
5. INSTALL STRAY CURRENT TEST STATION HOUSING TWO 1/0 AWG CABLES FROM ELECTRICALLY CONTINUOUS REBAR AND H–PILES IN FOOTING AND ONE #14 AWG HMWPE CABLE FROM COPPER/COPPER SULFATE REFERENCE CELL. SEE NOTE 7. REFERENCE CELL SHALL BE INSTALLED IN SOIL WITHIN 1–FOOT OF PILE AND 1–FOOT BELOW BOTTOM OF FOOTING. SEE DETAIL 4 ON SHEET E0–SYS–CORR–DTL–003, DETAIL 2 ON SHEET E0–SYS–CORR–DTL–013 AND DETAIL 1 ON SHEET E0–SYS–CORR–DTL–026.
6. INSTALL STRAY CURRENT BOND TEST STATION HOUSING. TWO 1/0 AWG CABLES FROM ELECTRICALLY CONTINUOUS REBAR AND H–PILES IN ABUTMENT, TWO 1/0 AWG CABLES FROM ELECTRICALLY CONTINUOUS REBAR AND H–PILES IN RETAINING WALLS E301 AND E302, AND TWO #14 AWG HMWPE CABLES FROM COPPER/COPPER SULFATE REFERENCE CELLS. SEE NOTES 7 AND 8. SEE DETAIL 3 ON SHEET E0–SYS–CORR–DTL–017.
7. ALL STRAY CURRENT TEST STATIONS SHALL BE INSTALLED AT LOCATIONS WHERE THEY WILL BE ACCESSIBLE AFTER COMPLETION OF ALL CONSTRUCTION ACTIVITIES AND DURING REVENUE LRT OPERATIONS.
8. MAINTAIN ELECTRICAL ISOLATION OF BLACK REBAR IN ABUTMENT WINGWALLS AND BLACK REBAR IN RETAINING WALLS E301 AND E302.
9. THE CONCRETE/SOIL INTERFACE ALONG EACH PILE UNDER THE FOOTING FOR THE ABUTMENT AND PIERS SHALL BE COATED WITH A DIELECTRIC COATING. THE COATING SHALL EXTEND INTO THE CONCRETE FOOTING AT LEAST 6 INCHES AND EXTEND A MINIMUM OF 18 INCHES INTO THE SOIL ALONG THE EXTERNAL PILE SURFACE BELOW THE BOTTOM OF THE FOOTING.

DESIGN DATA

AASHTO LRFD BRIDGE DESIGN SPECIFICATIONS, 7TH EDITION, 2014 WITH 2015 INTERIM REVISIONS

2014 AREMA MANUAL FOR RAILWAY ENGINEERING

2009 INCLUDING 2014 INTERIMS AASHTO LRFD GUIDE SPECIFICATIONS FOR THE DESIGN OF PEDESTRIAN BRIDGES

SOUTHWEST LIGHT RAIL TRANSIT DESIGN CRITERIA (REVISION 4.0)

LOAD AND RESISTANCE FACTOR DESIGN METHOD

90 PSF PEDESTRIAN LIVE LOAD
H 10 MAINTENANCE VEHICLE LIVE LOAD

MATERIAL DESIGN PROPERTIES:
REINFORCED CONCRETE:
f'c = 4.5 KSI, n = 8 (SUBSTRUCTURE)
f'c = 6 KSI, n = 6 (SUPERSTRUCTURE)
fy = 60 KSI REINFORCEMENT
STRUCTURAL STEEL:
fy = 50 KSI

DESIGN SPEED: OVER = 10 MPH

APPROXIMATE DECK AREA: 17218 SQ. FT.

LIST OF SHEETS

NO.	DESCRIPTION
1	KEY PLAN
2–4	GENERAL PLAN AND ELEVATION
5	TRANSVERSE SECTION AND QUANTITIES
6–7	BRIDGE LAYOUT
8–13	WEST ABUTMENT DETAILS AND REINFORCEMENT
14–19	EAST ABUTMENT DETAILS AND REINFORCEMENT
20–29	PIER DETAILS AND REINFORCEMENT
30	CORNER DETAILS
31–37	SUPERSTRUCTURE DETAILS
38	END DIAPHRAGM DETAILS
39	PREFABRICATED TRUSS
40–44	CURB DETAILS
45	SUPERSTRUCTURE REINFORCEMENT
46	DIAMOND MESH SAFETY RAIL
47	WATERPROOF EXPANSION DEVICE
48	APPROACH PANEL DETAILS
49	BRIDGE DETAILS
50	AS–BUILT BRIDGE DATA
51–53	BRIDGE SURVEY
54	BRIDGE SURVEY PLAN
55–58	BRIDGE SURVEY PROFILE
59–60	FOUNDATION STAGING PLAN

BRIDGE NO. R0692

CEDAR LAKE TRAIL OVER BELTLINE BLVD, CANADIAN PACIFIC RAILWAY & SOUTHWEST LRT 0.3 MI. SOUTH OF JCT. CSAH 5 AND BELTLINE BLVD. IN ST. LOUIS PARK

PREFABRICATED STEEL TRUSS MAIN SPAN WITH C.I.P. CONCRETE DECK GIRDER APPROACH SPANS
16'–0" TRAIL
00°–00'–00.00" SKEW

BRIDGE I.D. NO. 302 (MAIN SPAN)
NO. 206 (APPROACH SPANS)

KEY PLAN

SEC 19 T 117N R 21W

CITY OF ST. LOUIS PARK HENNEPIN COUNTY

JOB NO.: T9N635 STATE PROJECT NO. 9909–01 MNDOT REVIEW: JOE NIETFELD

NO.	DATE	BY	CHECK	DESIGN	REVISION / SUBMITTAL

DESIGNED BY: CAD CHECKED BY: LKZ
DRAWN BY: AMC CHECKED BY: MTC

AECOM Kimley»Horn

90% SUBMISSION - 01/22/16

METROPOLITAN COUNCIL

SOUTHWEST Green Line LRT Extension

CIVIL - VOLUME 4F
CEDAR LAKE TRAIL - BELTLINE STATION
BRIDGE R0692 (TRL)
KEY PLAN

DISCIPLINE: STRUCTURES

SHEET NAME: CBRR0692-BRG-GPE-001

SHEET 1 OF 60

Jan, 13 2016 03:27 pm V:\3400_ADC\CAD\SEGMENT E2\PLAN SHEETS\STRUCTURES\CLRT-TRL\CBRR0692-BRG-GPE-001.dwg By: Caitlyn.Deutsch

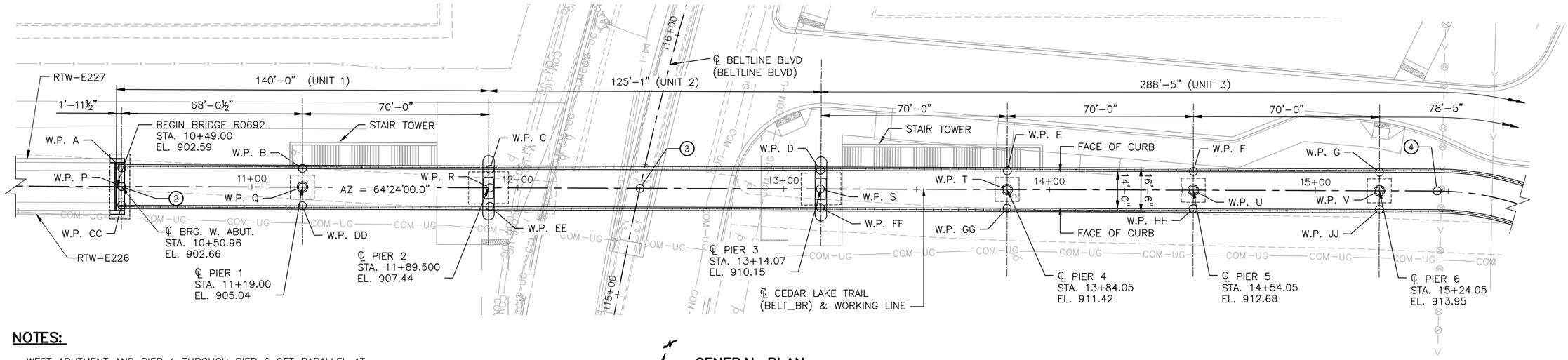

NOTES:

WEST ABUTMENT AND PIER 1 THROUGH PIER 6 SET PARALLEL AT AZ = 154°24'00.0"

FOR STATIONS AND COORDINATES OF POINTS (2) THRU (4), SEE KEY PLAN, SHEET 1

(A) CONCRETE BOX, SEE NOTE 1 ON KEY PLAN, SHEET 1

(B) FOR WEST ABUTMENT AND PIERS 1 THROUGH 6, SEE NOTE 2 ON KEY PLAN, SHEET 1

(C) VERTICAL CURVE STATIONS AND ELEVATIONS ARE ALONG THE ALIGNMENT FOR CEDAR LAKE TRAIL (CEDAR LAKE LRT TRAIL)

GENERAL PLAN

0 10' 20' 40'
SCALE IN FEET

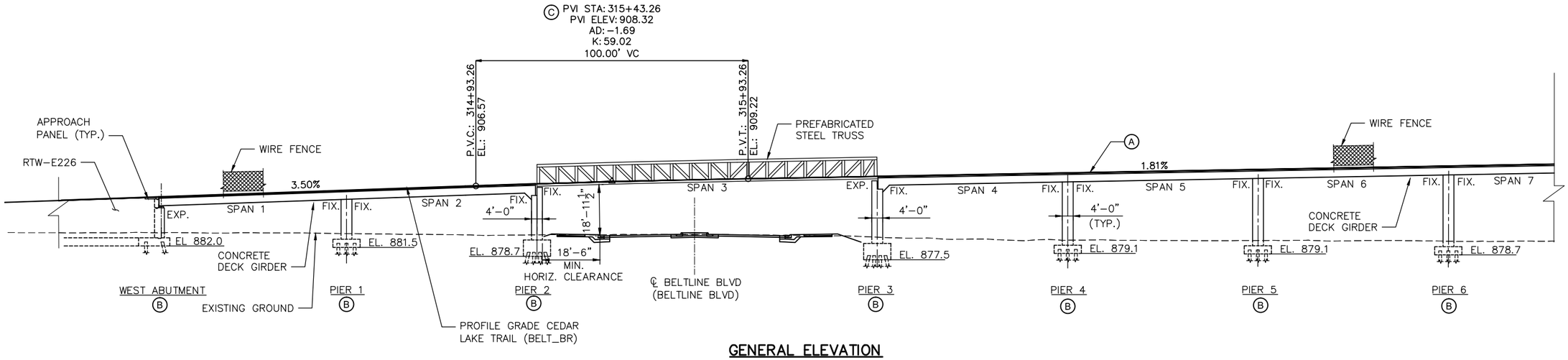

GENERAL ELEVATION

0 10' 20' 40'
SCALE IN FEET

NO.	DATE	BY	CHECK	DESIGN	REVISION / SUBMITTAL

DESIGNED BY: CAD | CHECKED BY: LKZ
DRAWN BY: AMC | CHECKED BY: MTC

AECOM Kimley»Horn

90% SUBMISSION - 01/22/16

METROPOLITAN COUNCIL

SOUTHWEST Green Line LRT Extension

CIVIL - VOLUME 4F
CEDAR LAKE TRAIL - BELTLINE STATION
BRIDGE R0692 (TRL)
GENERAL PLAN AND ELEVATION 1

DISCIPLINE: STRUCTURES
SHEET NAME: CBRR0692-BRG-GPE-002

SHEET 2 OF 60

Jan, 13 2016 03:30 pm V:\3400_ADC\CAD\SEGMENT E2\PLAN SHEETS\STRUCTURES\CLRT-TRL\CBRR0692-BRG-GPE-002.dwg By: Caitlyn.Deutsch

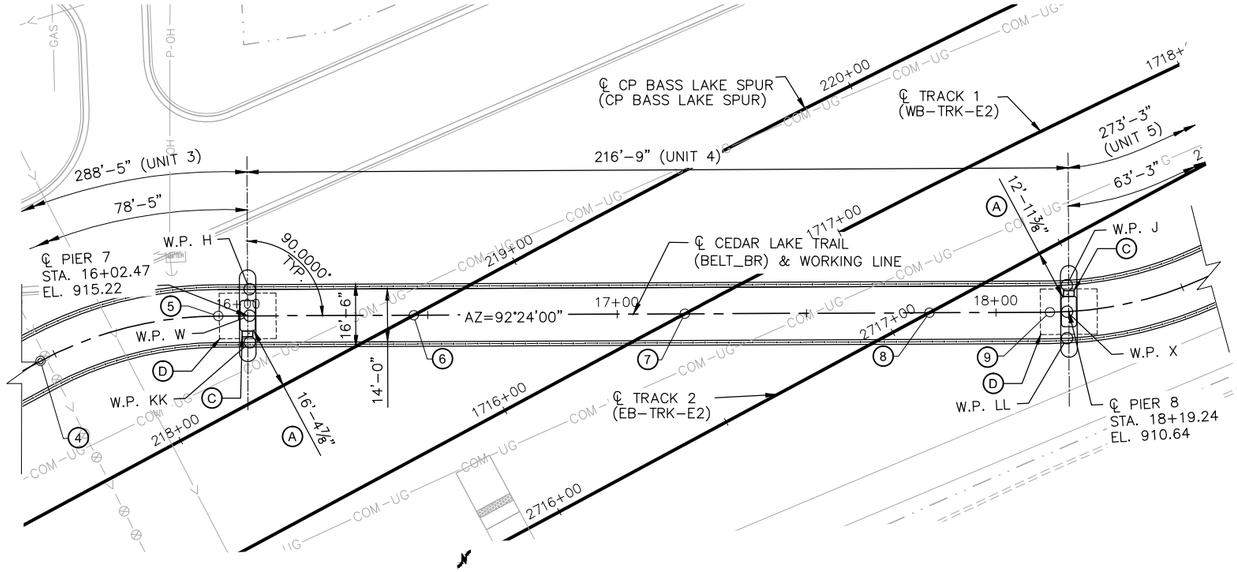

GENERAL PLAN

0 10' 20' 40'
SCALE IN FEET

NOTES:

PIERS 7 AND 8 SET PARALLEL TO AZIMUTH 2°24'00.0"

FOR STATIONS AND COORDINATES OF POINTS (4) THRU (9), SEE KEY PLAN, SHEET 1

(A) DIMENSION SHOWN IS MEASURED FROM FACE OF PIER COLUMN PERPENDICULAR TO TRACKS.

(B) DIMENSION SHOWN IS MEASURED ALONG CENTERLINE OF CEDAR LAKE TRAIL (CEDAR LAKE LRT TRAIL)

(C) STRAY CURRENT TEST STATION IS LOCATED ON THE NORTH FACE OR SOUTH FACE ACCORDING TO THE GENERAL PLAN SEE NOTE 5 ON KEY PLAN, SHEET 1

(D) FOR PIERS 7 THROUGH 11 AND EAST ABUTMENT, SEE NOTES 3 AND 4 ON KEY PLAN, SHEET 1

(E) STEEL TRUSS OR CONCRETE BOX, SEE NOTE 1 ON KEY PLAN, SHEET 1

(F) VERTICAL CURVE STATIONS AND ELEVATIONS ARE ALONG THE ALIGNMENT FOR CEDAR LAKE TRAIL (CEDAR LAKE LRT TRAIL)

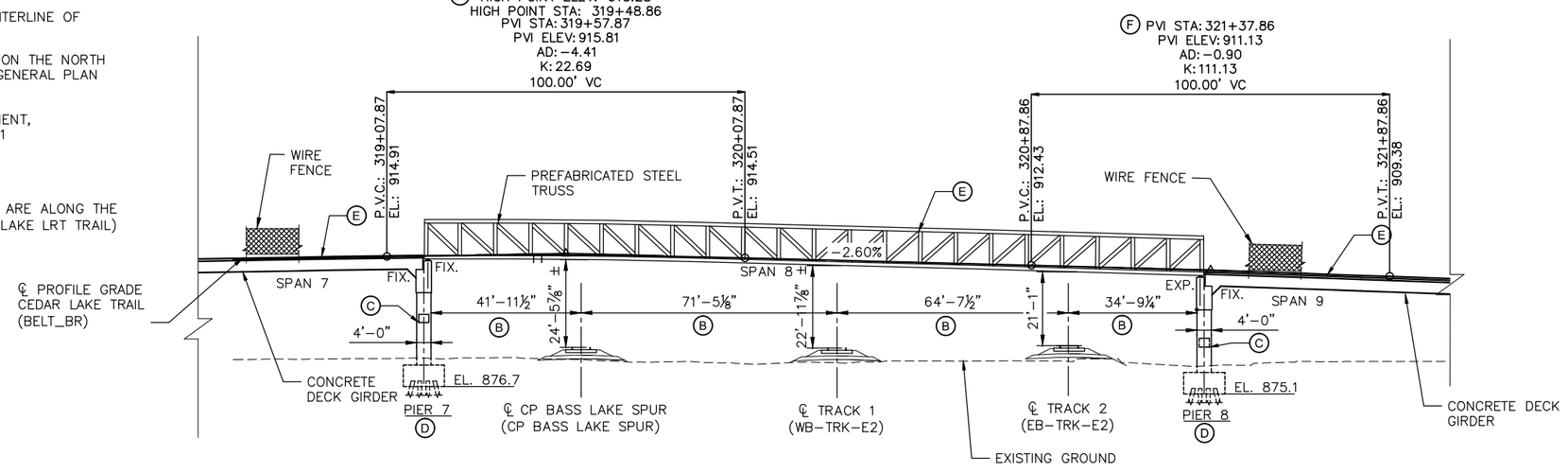

GENERAL ELEVATION

0 10' 20' 40'
SCALE IN FEET

NO.	DATE	BY	CHECK	DESIGN	REVISION / SUBMITTAL

DESIGNED BY: CAD CHECKED BY: LKZ
DRAWN BY: AMC CHECKED BY: MTC

AECOM Kimley»Horn

90% SUBMISSION - 01/22/16

METROPOLITAN COUNCIL

SOUTHWEST Green Line LRT Extension

CIVIL - VOLUME 4F
CEDAR LAKE TRAIL - BELTLINE STATION BRIDGE R0692 (TRL)
GENERAL PLAN AND ELEVATION 2

DISCIPLINE: STRUCTURES
SHEET NAME: CBRR0692-BRG-GPE-003

SHEET 3 OF 60

Jan, 13 2016 03:33 pm V:\3400_ADC\CAD\SEGMENT E2\PLAN SHEETS\STRUCTURES\CLRT-TRL\CBRR0692-BRG-GPE-003.dwg By: Caitlyn.Deutsch

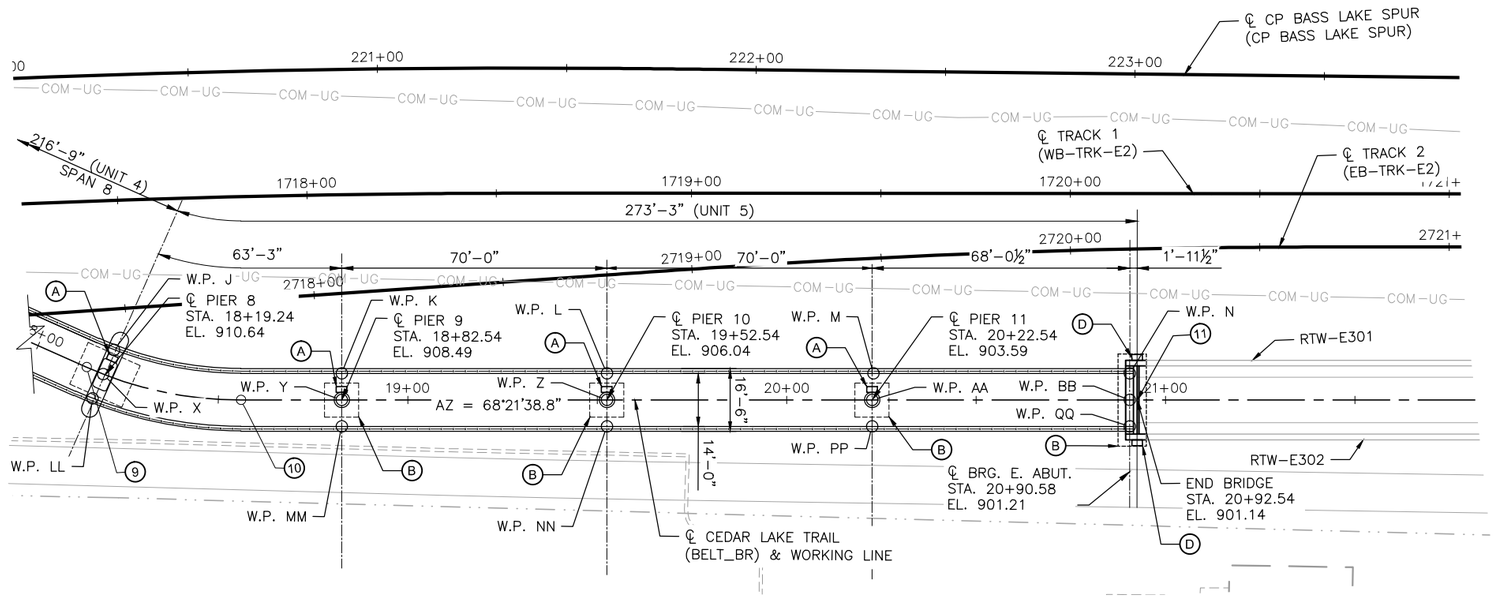

GENERAL PLAN

0 10' 20' 40'

SCALE IN FEET

NOTES:

PIER 9 THROUGH PIER 11 AND EAST ABUTMENT SET PARALLEL TO AZIMUTH 158°21'38.8"

FOR STATIONS AND COORDINATES OF POINTS (9), (10) AND (11), SEE KEY PLAN, SHEET 1

(A) STRAY CURRENT TEST STATION IS LOCATED ON THE NORTH FACE OR SOUTH FACE ACCORDING TO THE GENERAL PLAN SEE NOTE 5 ON KEY PLAN, SHEET 1

(B) FOR PIERS 7 THROUGH 11 AND EAST ABUTMENT, SEE NOTES 3 AND 4 ON KEY PLAN, SHEET 1

(C) STEEL TRUSS OR CONCRETE BOX, SEE NOTE 1 ON KEY PLAN, SHEET 1

(D) STRAY CURRENT BOND TEST STATION ON NORTH FACE AND SOUTH FACE OF EAST ABUTMENT, SEE NOTES 6 AND 8 ON KEY PLAN, SHEET 1

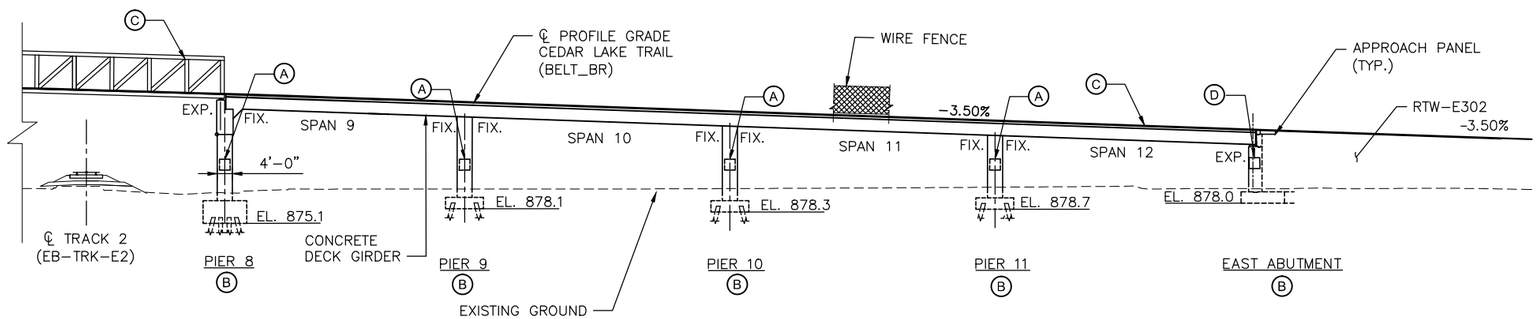

GENERAL ELEVATION

0 10' 20' 40'

SCALE IN FEET

NO.	DATE	BY	CHECK	DESIGN	REVISION / SUBMITTAL

DESIGNED BY: CAD CHECKED BY: LKZ
DRAWN BY: AMC CHECKED BY: MTC

AECOM Kimley»Horn

90% SUBMISSION - 01/22/16

METROPOLITAN COUNCIL

SOUTHWEST Green Line LRT Extension

CIVIL - VOLUME 4F
CEDAR LAKE TRAIL - BELTLINE STATION
BRIDGE R0692 (TRL)
GENERAL PLAN AND ELEVATION 3

DISCIPLINE: STRUCTURES

SHEET NAME: CBRR0692-BRG-GPE-004

SHEET 4 OF 60

Jan, 13 2016 03:35 pm V:\3400_ADC\CAD\SEGMENT E2\PLAN SHEETS\STRUCTURES\CLRT-TRL\CBRR0692-BRG-GPE-004.dwg By: Caitlyn.Deutsch

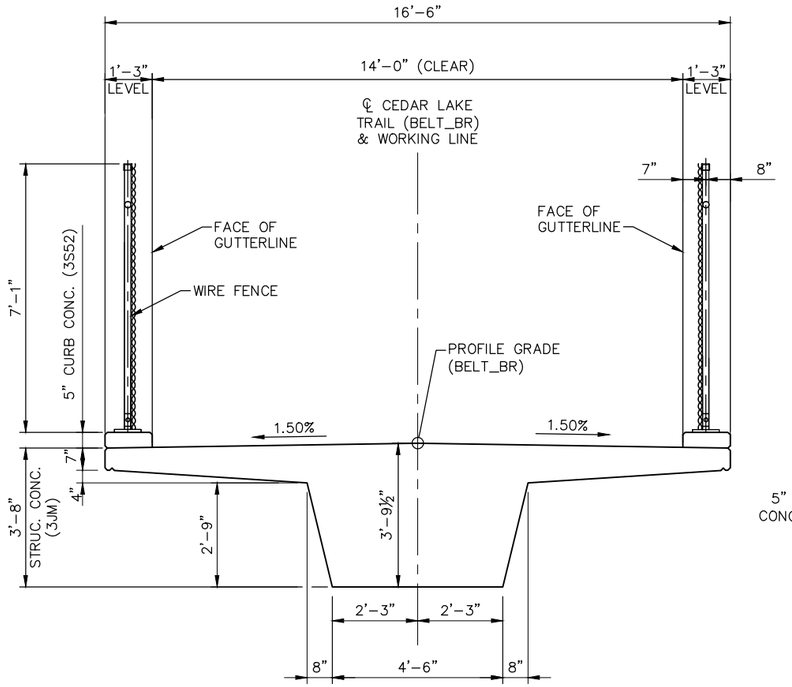

TRANSVERSE SECTION
(UNIT 1, UNIT 3, & UNIT 5)

0 1' 2' 4'

SCALE IN FEET

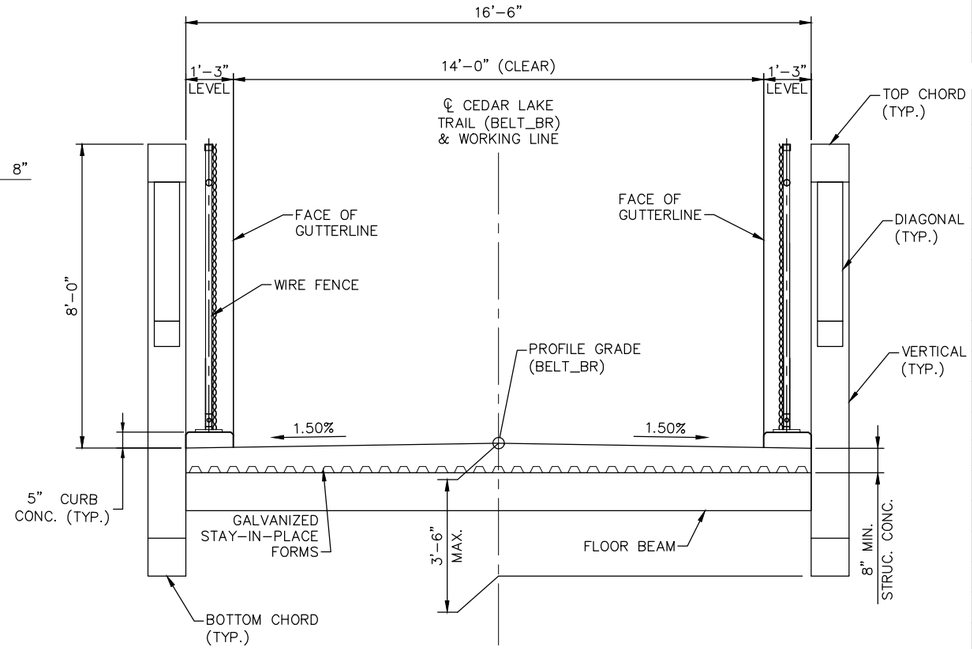

TRANSVERSE SECTION
(UNIT 2 & UNIT 4)

0 1' 2' 4'

SCALE IN FEET

CONSTRUCTION NOTES:

THE 2016 EDITION OF THE MINNESOTA DEPARTMENT OF TRANSPORTATION "STANDARD SPECIFICATIONS FOR CONSTRUCTION" SHALL GOVERN.

BRIDGE SEAT REINFORCEMENT SHALL BE CAREFULLY PLACED TO AVOID INTERFERENCE WITH DRILLING HOLES FOR ANCHOR RODS, THE BEAMS SHALL BE ERECTED IN FINAL POSITION PRIOR TO DRILLING HOLES FOR AND PLACING ANCHOR RODS.

THE BAR SIZES SHOWN IN THIS PLAN ARE IN U.S. CUSTOMARY DESIGNATIONS. THE FIRST DIGIT OR THE FIRST TWO DIGITS OF EACH BAR MARK INDICATE THE BAR SIZE.

BARS MARKED WITH THE SUFFIX "E" SHALL BE EPOXY COATED IN ACCORDANCE WITH SPEC. 3301.

THE SUBSURFACE UTILITY INFORMATION IN THIS PLAN IS UTILITY QUALITY LEVEL D. THIS UTILITY QUALITY LEVEL WAS DETERMINED ACCORDING TO THE GUIDELINES OF CI/ASCE 38-02, ENTITLED "STANDARD GUIDELINES FOR THE COLLECTION AND DEPICTION OF EXISTING SUBSURFACE UTILITY DATA".

THE PILE LOADS SHOWN IN THE PLANS AND THE CORRESPONDING NOMINAL PILE BEARING RESISTANCE (Rn) WERE COMPUTED USING LRFD METHODOLOGY. PILE BEARING RESISTANCE DETERMINED IN THE FIELD SHALL INCORPORATE THE METHODS AND/OR FORMULAS DESCRIBED IN THE SPECIAL PROVISIONS.

SCHEDULE OF QUANTITIES

SPEC. SECTION	ITEM	UNIT	QUANTITY
--	CONSTRUCT BRIDGE R0692	LUMP SUM	LS

COMPONENT ITEM SUMMARY (BRIDGE R0692)

SPEC. SECTION (3)	ITEM	UNIT (2)	QUANTITY (2)
2100	PEDESTRIAN BRIDGE (SUPERSTRUCTURE)	EACH	2
2401	STRUCTURAL CONCRETE (1G52)	CU. YD.	
2401	STRUCTURAL CONCRETE (3B52)	CU. YD.	
2401	STRUCTURAL CONCRETE (3JM)	CU. YD.	
2401	STRUCTURAL CONCRETE (3S52)	CU. YD.	
2401	STRUCTURAL CONCRETE (3Y42)	CU. YD.	
2401	REINFORCEMENT BARS	POUND	
2401	REINFORCEMENT BARS (EPOXY COATED)	POUND	
2402	EXPANSION JOINT DEVICES TYPE SPECIAL	LIN. FT.	
2402	ELASTOMERIC BEARING ASSEMBLY	EACH	
2402	DRAINAGE SYSTEM BRIDGE DECK	EACH	
2451	STRUCTURE EXCAVATION CLASS E	CU. YD.	
2451	STRUCTURAL BACKFILL	CU. YD.	
2452	STEEL H-PILING DRIVEN 12"	LIN. FT.	
2452	STEEL H-PILING DELIVERED 12"	LIN. FT.	
2452	STEEL H-TEST PILE 56 FT LONG 12"	EACH	
2452	STEEL H-TEST PILE 57 FT LONG 12"	EACH	
2452	STEEL H-TEST PILE 58 FT LONG 12"	EACH	
2452	PILE TIP PROTECTION 12"	EACH	
2481	THREE-PLY JOINT WATERPROOFING	LIN. FT.	
2557	DIAMOND MESH SAFETY RAIL	LIN. FT.	

(1) A BENCHMARK IS REQUIRED, LOCATED AT THE NW CORNER OF THE BRIDGE. STATE WILL FURNISH DISK. BEND PRONGS OUTWARD TO ANCHOR DISK TO CONCRETE. BOTTOM OF DISK TOP TO BE PLACE FLUSH WITH CONCRETE.

(2) QUANTITIES LISTED FOR THE COMPONENT ITEMS OF THE LUMP SUM BR R0692 ITEM ARE FOR INFORMATION PURPOSES. ANY ADDITIONAL ITEMS OR CHANGES IN QUANTITIES REQUIRED SHALL BE PROVIDED BY THE CONTRACTOR WITH NO ADDITIONAL COMPENSATION.

(3) MEASUREMENT AND PAYMENT FOR COMPONENT ITEMS SHALL BE PART OF THE LUMP SUM PAYMENT FOR BR R0692. REFER TO MNDOT STANDARD SPECIFICATION OR SPECIAL PROVISION FOR TECHNICAL SPECIFICATION REQUIREMENTS FOR ALL PROVISION OTHER THAN MEASUREMENT & PAYMENT REQUIREMENTS.

NO.	DATE	BY	CHECK	DESIGN	REVISION / SUBMITTAL

DESIGNED BY: CAD | CHECKED BY: LKZ
DRAWN BY: AMC | CHECKED BY: MTC

AECOM Kimley»Horn

90% SUBMISSION - 01/22/16

METROPOLITAN COUNCIL

SOUTHWEST Green Line LRT Extension

CIVIL - VOLUME 4F
CEDAR LAKE TRAIL - BELTLINE STATION
BRIDGE R0692 (TRL)
TRANSVERSE SECTION AND QUANTITIES

DISCIPLINE: STRUCTURES
SHEET NAME: CBRR0692-BRG-TRN-001

SHEET 5 OF 60

Jan, 13 2016 03:36 pm V:\3400_ADC\CAD\SEGMENT E2\PLAN SHEETS\STRUCTURES\CLRT-TRL\CBRR0692-BRG-TRN-001.dwg By: Caitlyn.Deutsch

NOTES:

1. ℄ CEDAR LAKE TRAIL (BELT_BR) STA. 12+45.92
   ℄ BELTLINE BLVD (BELTLINE BLVD) STA. 115+40.81
   X = 511140.537
   Y = 155653.408
   T.T.C.= 77°23'37.9"
2. ℄ CEDAR LAKE TRAIL (BELT_BR) STA. 16+46.40
   ℄ CP BASS LAKE SPUR (CP BASS LAKE SPUR) STA. 218+69.91
   X = 511510.058
   Y = 155790.534
   ∠ = 28°0'00.0"
3. ℄ CEDAR LAKE TRAIL (BELT_BR) STA. 17+17.83
   ℄ TRACK 1 (WB–TRK–E2) STA. 1716+53.85
   X = 511581.426
   Y = 155787.543
   T.T.C.= 27°40'39.9"
4. CONTROL POINT
   ℄ CEDAR LAKE TRAIL (BELT_BR) STA. 17+82.46
   ℄ TRACK 2 (EB–TRK–E2) STA. 2717+10.92
   X = 511645.996
   Y = 155784.837
   ∠ = 28°0'00.0"
5. BEARING HEIGHT ASSUMED FOR TRUSS BRIDGE. COORDINATE WITH BRIDGE MANUFACTURER.

SEE SHEET 7 FOR TABLE OF DIMENSIONS BETWEEN WORKING POINTS.

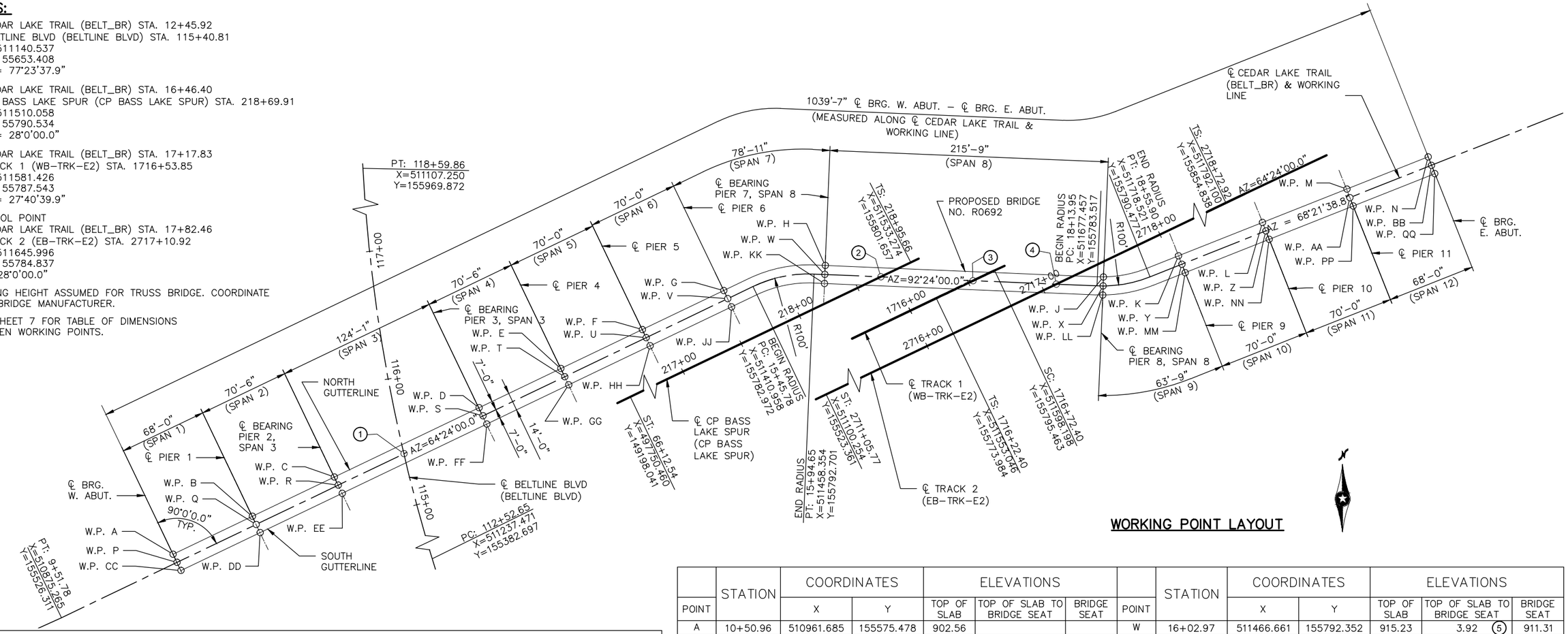

WORKING POINT LAYOUT

TOP OF ROADWAY TO BRIDGE SEAT

	DECK THICKNESS (IN)	STOOL HEIGHT (IN)	BEAM HEIGHT (IN)	BEARING HEIGHT (IN)	TOTAL INCHES	TOTAL FEET		DECK THICKNESS (IN)	STOOL HEIGHT (IN)	BEAM HEIGHT (IN)	BEARING HEIGHT (IN)	TOTAL INCHES	TOTAL FEET
WEST ABUTMENT	N/A	N/A	45.5	4.375"	49.875	4.16	PIER 7 WEST	N/A	N/A	45.5	N/A	45.5	3.79
PIER 1	N/A	N/A	45.5	N/A	45.5	3.79	PIER 7 EAST	N/A	N/A	42	5" (5)	47	3.92
PIER 2 WEST	N/A	N/A	45.5	N/A	45.5	3.79	PIER 8 WEST	N/A	N/A	42	5" (5)	47	3.92
PIER 2 EAST	N/A	N/A	42	5" (5)	47	3.92	PIER 8 EAST	N/A	N/A	45.5	N/A	45.5	3.79
PIER 3 WEST	N/A	N/A	42	5" (5)	47	3.92	PIER 9	N/A	N/A	45.5	N/A	45.5	3.79
PIER 3 EAST	N/A	N/A	45.5	N/A	45.5	3.79	PER 10	N/A	N/A	45.5	N/A	45.5	3.79
PIER 4	N/A	N/A	45.5	N/A	45.5	3.79	PIER 11	N/A	N/A	45.5	N/A	45.5	3.79
PIER 5	N/A	N/A	45.5	N/A	45.5	3.79	EAST ABUTMENT	N/A	N/A	45.5	4.375"	49.875	4.16
PIER 6	N/A	N/A	45.5	N/A	45.5	3.79							

POINT	STATION	COORDINATES X	COORDINATES Y	ELEVATIONS TOP OF SLAB	ELEVATIONS TOP OF SLAB TO BRIDGE SEAT	ELEVATIONS BRIDGE SEAT
A	10+50.96	510961.685	155575.478	902.56		
B	11+19.00	511023.047	155604.878	904.94		
C	11+89.50	511086.626	155635.340	907.35		
D	13+13.55	511198.500	155688.941	910.04		
E	13+84.05	511262.080	155719.403	911.32		
F	14+54.05	511325.208	155749.649	912.58		
G	15+24.05	511388.336	155779.895	913.85		
H	16+02.97	511466.950	155799.346	915.13		
J	18+18.75	511682.545	155790.434	910.56		
K	18+82.54	511740.695	155806.805	908.39		
L	19+52.54	511805.762	155832.618	905.94		
M	20+22.54	511870.836	155858.435	903.49		
N	20+90.58	511934.076	155883.523	901.11		
P	10+50.96	510964.710	155569.165	902.66	4.16	898.50
Q	11+19.00	511026.072	155598.565	905.04	3.79	901.25
R	11+89.50	511089.651	155629.027	907.45	3.92 (5)	903.53
S	13+13.55	511201.525	155682.628	910.14	3.92 (5)	906.22
T	13+84.05	511265.104	155713.090	911.42	3.79	907.63
U	14+54.05	511328.232	155743.336	912.68	3.79	908.89
V	15+24.05	511391.361	155773.582	913.95	3.79	910.16
W	16+02.97	511466.661	155792.352	915.23	3.92 (5)	911.31
X	18+18.75	511682.256	155783.432	910.66	3.92 (5)	906.74
Y	18+82.54	511743.276	155800.298	908.49	3.79	904.70
Z	19+52.54	511808.343	155826.112	906.04	3.79	902.25
AA	20+22.54	511873.417	155851.928	903.59	3.79	899.80
BB	20+90.58	511936.657	155877.017	901.21	4.16	897.05
CC	10+50.96	510967.734	155562.853	902.56		
DD	11+19.00	511029.096	155592.252	904.94		
EE	11+89.50	511092.676	155622.714	907.35		
FF	13+13.55	511204.550	155676.315	910.04		
GG	13+84.05	511268.129	155706.777	911.32		
HH	14+54.05	511331.257	155737.024	912.58		
JJ	15+24.05	511394.385	155767.270	913.85		
KK	16+02.97	511466.370	155785.358	915.13		
LL	18+18.75	511681.960	155776.430	910.56		
MM	18+82.54	511745.857	155793.792	908.39		
NN	19+52.54	511810.924	155819.605	905.94		
PP	20+22.54	511876.000	155845.422	903.49		
QQ	20+90.58	511939.240	155870.511	901.11		

NO.	DATE	BY	CHECK	DESIGN	REVISION / SUBMITTAL

DESIGNED BY: CAD | CHECKED BY: MTC
DRAWN BY: AMC | CHECKED BY: LKZ

AECOM Kimley»Horn

90% SUBMISSION - 01/22/16

METROPOLITAN COUNCIL

SOUTHWEST Green Line LRT Extension

CIVIL - VOLUME 4F
CEDAR LAKE TRAIL - BELTLINE STATION
BRIDGE R0692 (TRL)
BRIDGE LAYOUT 1

DISCIPLINE: STRUCTURES
SHEET NAME: CBRR0692-BRG-LYT-001

SHEET 6 OF 60

Jan, 13 2016 03:36 pm V:\3400_ADC\CAD\SEGMENT E2\PLAN SHEETS\STRUCTURES\CLRT-TRL\CBRR0692-BRG-LYT-001.dwg By: Caitlyn.Deutsch

DIMENSIONS BETWEEN WORKING POINTS

W.P.	TO W.P.		W.P.	TO W.P.		W.P.	TO W.P.		W.P.	TO W.P.	
A	B	68.04	G	H	80.99	M	N	68.04	Y	Z	70.00
	P	7.00		V	7.00		AA	7.00		MM	7.00
	Q	68.40		W	79.31		BB	68.39		NN	70.35
	DD	69.47		GG	140.70		MM	140.71	Z	AA	70.01
	EE	139.25		HH	71.39		NN	71.39		NN	7.00
B	C	70.50		KK	78.22		QQ	69.46		PP	70.36
	Q	7.00		LL	293.65	N	NN	138.75	AA	BB	68.04
	R	70.85	H	J	215.78		PP	69.46		PP	7.00
	CC	69.47		W	7.00	P	Q	68.04		QQ	68.39
	EE	71.88		X	215.89		CC	7.00	BB	QQ	7.00
	FF	195.05		HH	149.32		DD	68.40	CC	DD	68.04
C	D	124.05		JJ	79.34	Q	R	70.50	DD	EE	70.50
	R	7.00		LL	216.23		DD	7.00	EE	FF	124.05
	S	124.25		MM	278.96		EE	70.85	FF	GG	70.50
	CC	139.25	J	K	60.41	R	S	124.05	GG	HH	70.00
	DD	71.88		X	7.00		EE	7.00	HH	JJ	70.00
	FF	124.84		Y	61.53		FF	124.25	JJ	KK	74.22
	GG	195.05		JJ	289.09	S	T	70.50	KK	LL	215.78
D	E	70.50		KK	216.24		FF	7.00	LL	MM	66.21
	S	7.00		MM	63.40		GG	70.85	MM	NN	70.00
	T	70.85		NN	131.65	T	U	70.00	NN	PP	70.01
	DD	195.05	K	L	70.00		GG	7.00	PP	QQ	68.04
	EE	124.84		Y	7.00		HH	70.35			
	GG	71.88		Z	70.35	U	V	70.00			
	HH	141.20		KK	275.16		HH	7.00			
E	F	70.00		LL	66.12		JJ	70.35			
	T	7.00		NN	71.39	V	W	77.60			
	U	70.35		PP	140.71		JJ	7.00			
	EE	195.05	L	M	70.01		KK	75.93			
	FF	71.88		Z	7.00	W	X	215.78			
	HH	71.39		AA	70.36		KK	7.00			
	JJ	140.70		LL	135.95		LL	215.89			
F	G	70.00		MM	71.39	X	Y	63.31			
	U	7.00		PP	71.39		LL	7.00			
	V	70.35		QQ	138.75		MM	64.44			
	FF	141.20									
	GG	71.39									
	JJ	71.39									
	KK	145.61									

NO.	DATE	BY	CHECK	DESIGN	REVISION / SUBMITTAL

DESIGNED BY: CAD | CHECKED BY: MTC
DRAWN BY: AMC | CHECKED BY: LKZ

AECOM Kimley»Horn

90% SUBMISSION - 01/22/16

METROPOLITAN COUNCIL

SOUTHWEST Green Line LRT Extension

CIVIL - VOLUME 4F
CEDAR LAKE TRAIL - BELTLINE STATION
BRIDGE R0692 (TRL)
BRIDGE LAYOUT 2

DISCIPLINE: STRUCTURES
SHEET NAME: CBRR0692-BRG-LYT-002

SHEET 7 OF 60

Jan, 13 2016 03:36 pm V:\3400_ADC\CAD\SEGMENT E2\PLAN SHEETS\STRUCTURES\CLRT-TRL\CBRR0692-BRG-LYT-002.dwg By: Caitlyn.Deutsch

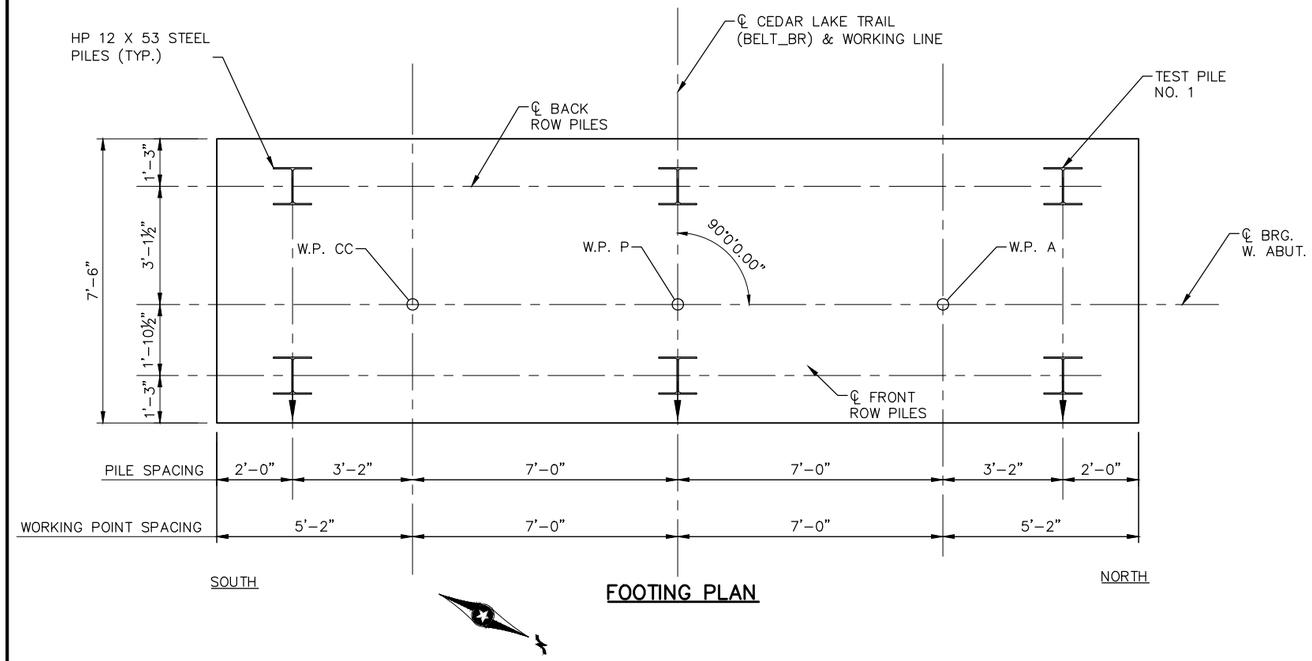

FOOTING PLAN

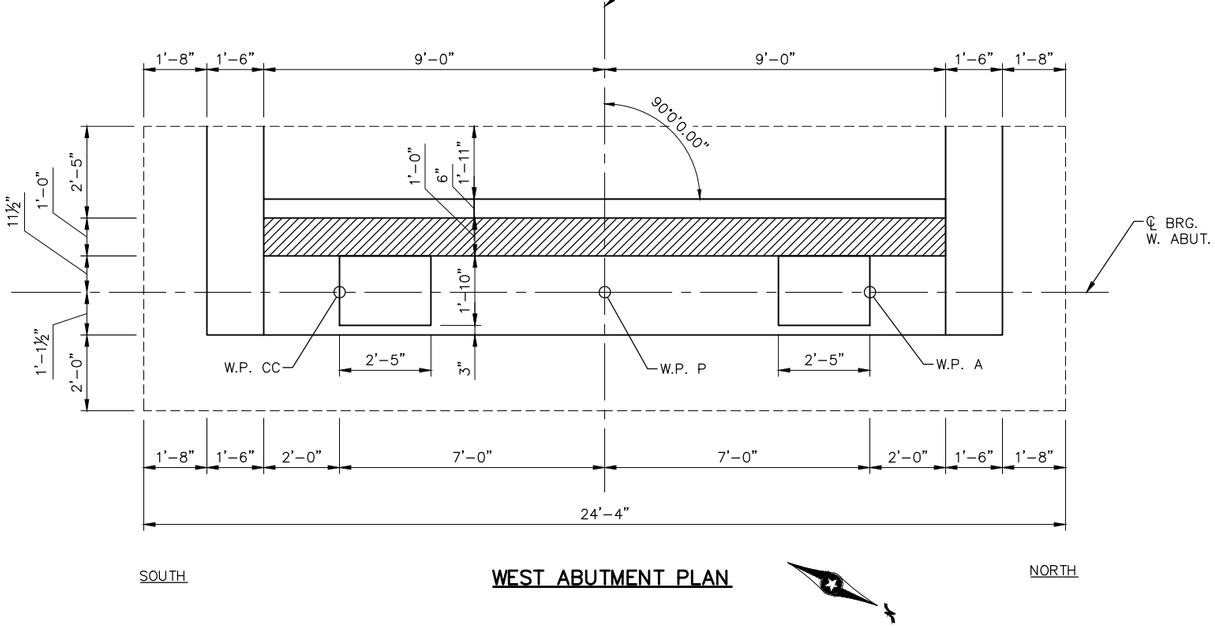

WEST ABUTMENT PLAN

WEST ABUTMENT COMPUTED PILE LOAD - TONS/PILE	
FACTORED DEAD LOAD + EARTH PRESSURE	113
FACTORED LIVE LOAD	12
*FACTORED DESIGN LOAD	125
* BASED ON STRENGTH V LOAD COMBINATION.	

WEST ABUTMENT REQUIRED NOMINAL PILE BEARING RESISTANCE FOR H-PILES Rn - TONS/PILE		
FIELD CONTROL METHOD	φdyn	*Rn
MN/DOT PILE FORMULA 2012 (MPF12) $R_n = 20\sqrt{\frac{W \times H}{1000}} \times log\left(\frac{10}{S}\right)$	0.60	151
PDA	0.65	140
* Rn = (FACTORED DESIGN LOAD) / φdyn		

GENERAL PILE NOTES:

1 HP 12 X 53 TEST PILES 70 FT. LONG
5 HP 12 X 53 PILES EST. LENGTH 60 FT.
6 HP 12 X 53 PILES REQ'D FOR WEST ABUT.

PILE SPACING SHOWN IS AT BOTTOM OF FOOTING.

PILES MARKED THUS $\overset{4}{\perp}$ TO BE BATTERED 3" PER FOOT IN DIRECTION SHOWN.

PILES ARE TO BE HP 12 X 53 WITH PILE TIP PROTECTION.

FOR PILE SPLICE DETAILS SEE DETAIL B202.

NO.	DATE	BY	CHECK	DESIGN	REVISION / SUBMITTAL

DESIGNED BY: CAD | CHECKED BY: MTC
DRAWN BY: AMC | CHECKED BY: LKZ

AECOM Kimley»Horn

90% SUBMISSION - 01/22/16

METROPOLITAN COUNCIL

SOUTHWEST Green Line LRT Extension

CIVIL - VOLUME 4F
CEDAR LAKE TRAIL - BELTLINE STATION
BRIDGE R0692 (TRL)
WEST ABUTMENT DETAILS 1

DISCIPLINE: STRUCTURES
SHEET NAME: CBRR0692-BRG-ABT-001

SHEET 8 OF 60

Jan, 13 2016 03:38 pm v:\3400_ADC\CAD\SEGMENT E2\PLAN SHEETS\STRUCTURES\CLRT-TRL\CBRR0692-BRG-ABT-001.dwg By: Caitlyn.Deutsch

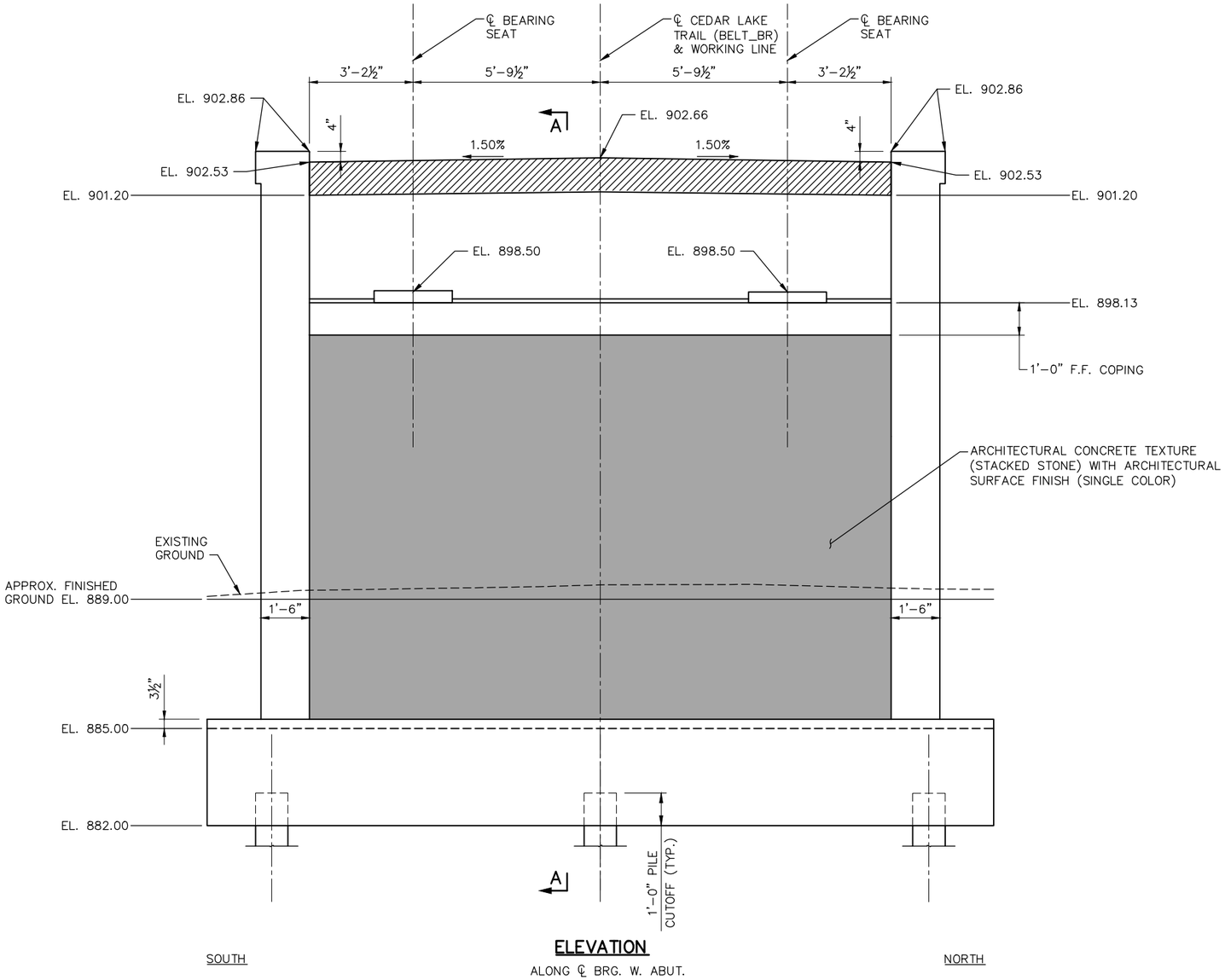

ELEVATION

ALONG ℄ BRG. W. ABUT.

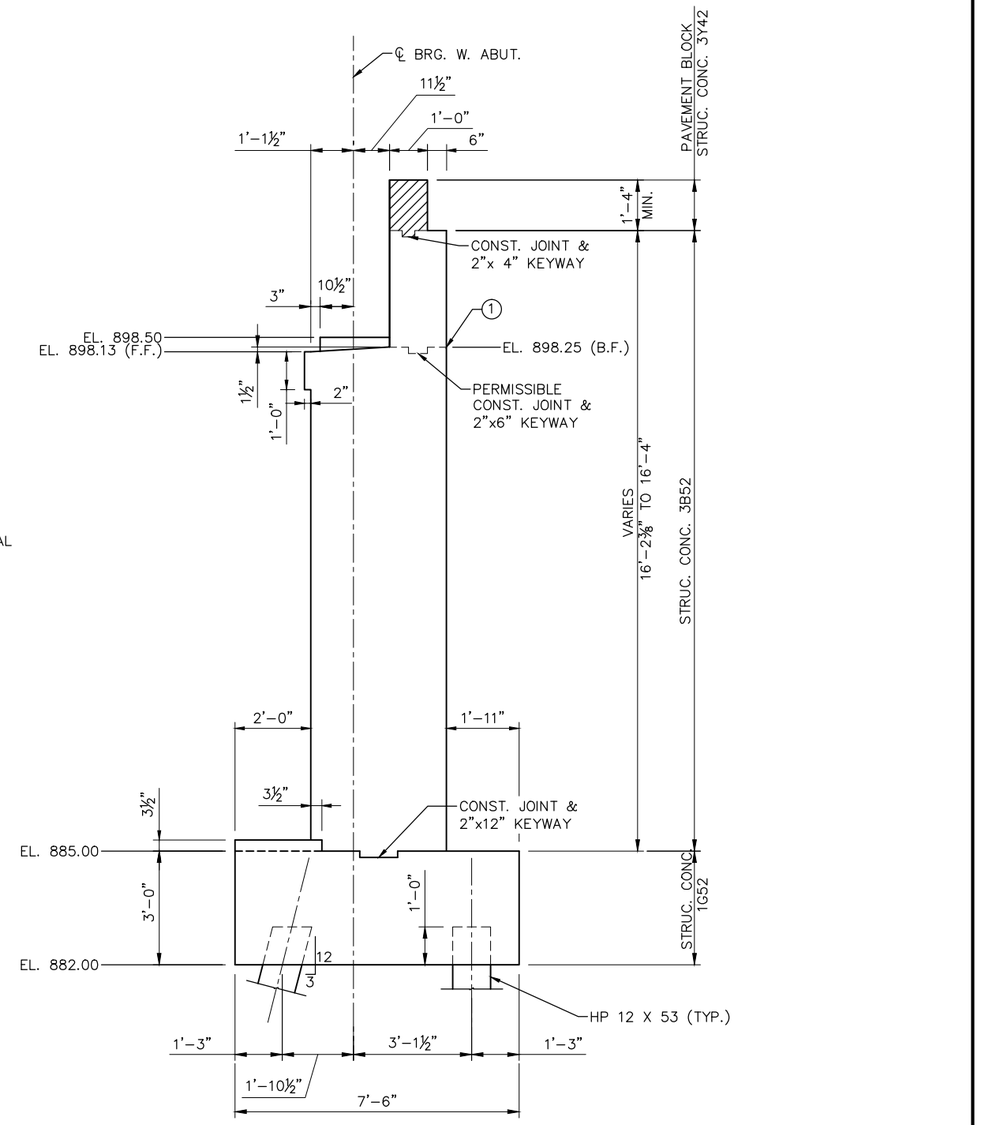

SECTION A-A

NOTES:

1. 3-PLY JOINT WATERPROOFING IF CONSTRUCTION JOINT IS USED

   SIDES OF SHEAR KEY TO BE VERTICAL AND TOP OF SHEAR KEY TO BE LEVEL IN BOTH DIRECTIONS

   F.F. DENOTES FRONT FACE.
   B.F. DENOTES BACK FACE.
   E.F. DENOTES EACH FACE.

NO.	DATE	BY	CHECK	DESIGN	REVISION / SUBMITTAL

DESIGNED BY: CAD | CHECKED BY: MTC
DRAWN BY: AMC | CHECKED BY: LKZ

AECOM Kimley»Horn

90% SUBMISSION - 01/22/16

METROPOLITAN COUNCIL

SOUTHWEST Green Line LRT Extension

CIVIL - VOLUME 4F
CEDAR LAKE TRAIL - BELTLINE STATION
BRIDGE R0692 (TRL)
WEST ABUTMENT DETAILS 2

DISCIPLINE: STRUCTURES
SHEET NAME: CBRR0692-BRG-ABT-002

SHEET 9 OF 60

Jan, 13 2016 03:40 pm V:\3400_ADC\CAD\SEGMENT E2\PLAN SHEETS\STRUCTURES\CLRT-TRL\CBRR0692-BRG-ABT-002.dwg By: Caitlyn.Deutsch

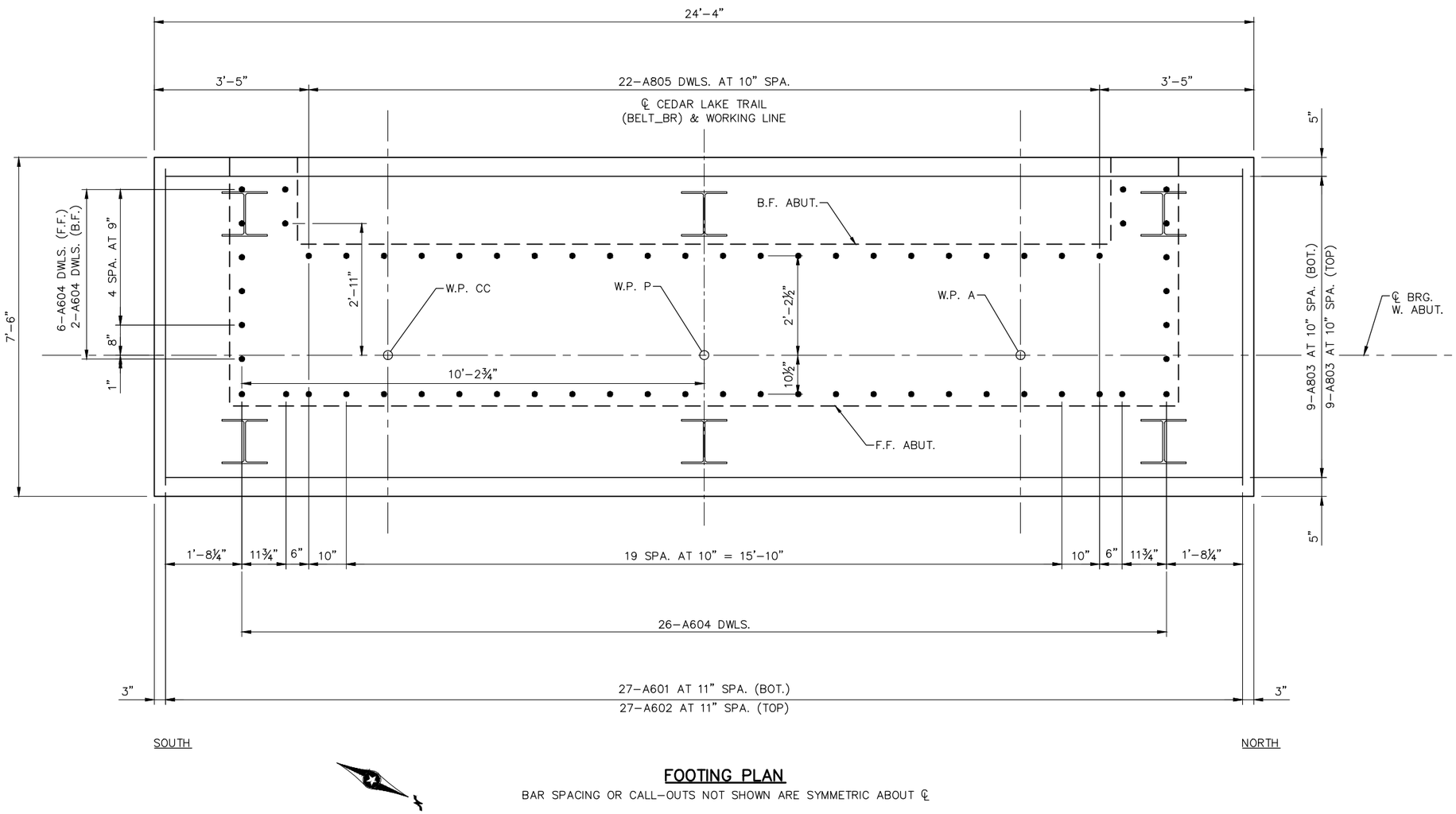

FOOTING PLAN

BAR SPACING OR CALL-OUTS NOT SHOWN ARE SYMMETRIC ABOUT ℄

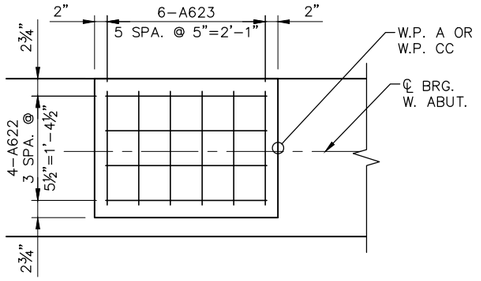

TYPICAL PEDESTAL PLAN

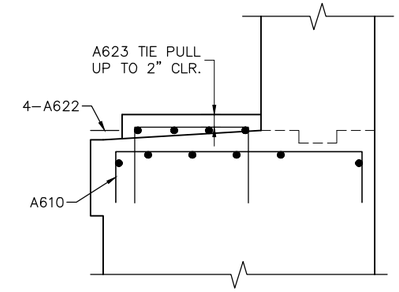

TYPICAL PEDESTAL SECTION

NOTES:

F.F. DENOTES FRONT FACE.
B.F. DENOTES BACK FACE.
E.F. DENOTES EACH FACE.

NO.	DATE	BY	CHECK	DESIGN	REVISION / SUBMITTAL

DESIGNED BY: CAD | CHECKED BY: MTC
DRAWN BY: AMC | CHECKED BY: LKZ

AECOM Kimley»Horn

90% SUBMISSION - 01/22/16

METROPOLITAN COUNCIL

SOUTHWEST Green Line LRT Extension

CIVIL - VOLUME 4F
CEDAR LAKE TRAIL - BELTLINE STATION
BRIDGE R0692 (TRL)
WEST ABUTMENT REINFORCEMENT 1

DISCIPLINE: STRUCTURES
SHEET NAME: CBRR0692-BRG-ABT-003

SHEET 10 OF 60

Jan, 13 2016 03:41 pm V:\3400_ADC\CAD\SEGMENT E2\PLAN SHEETS\STRUCTURES\CLRT-TRL\CBRR0692-BRG-ABT-003.dwg By: Caitlyn.Deutsch

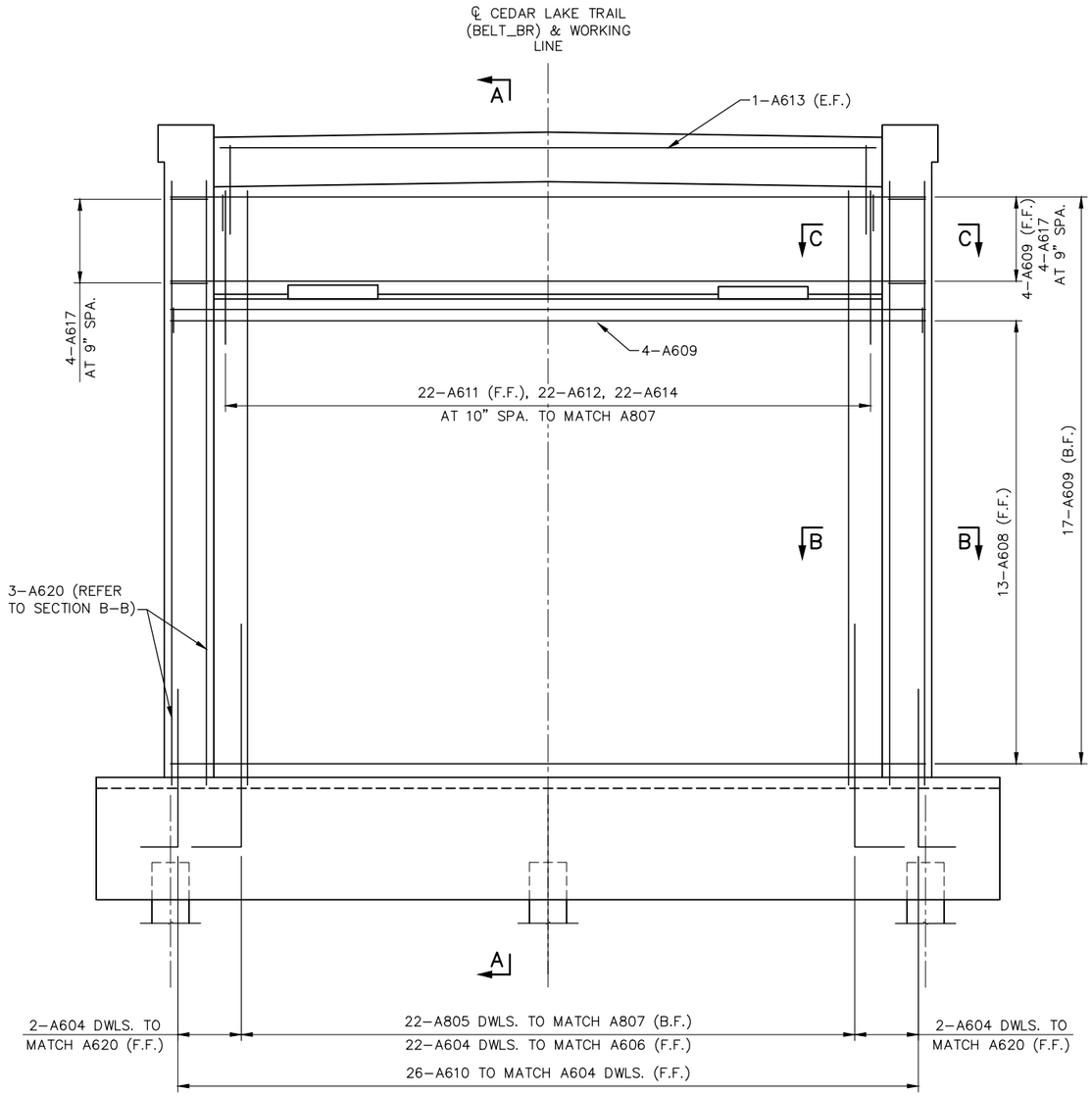

ELEVATION

CALL–OUTS NOT SHOWN ARE SYMMETRIC ABOUT ℄

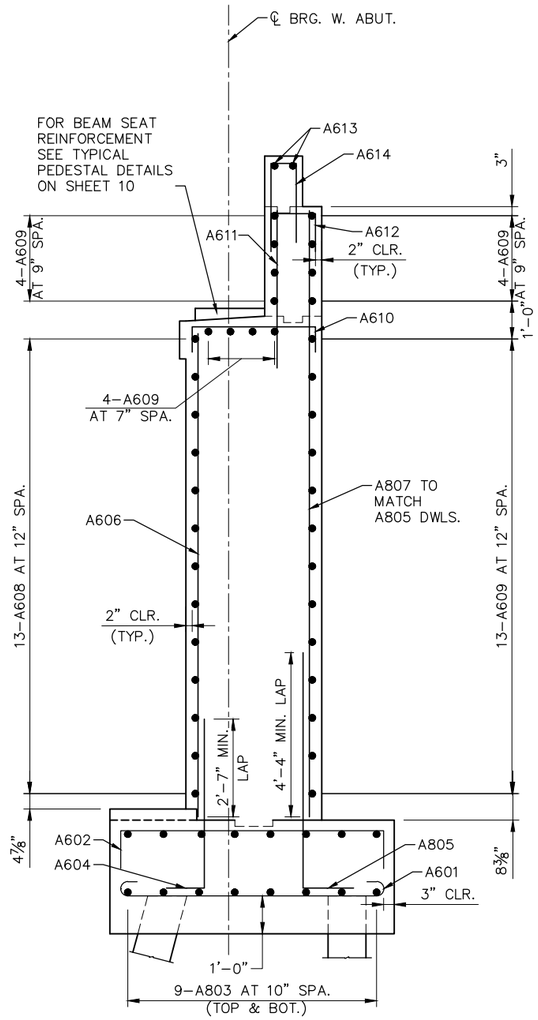

SECTION A–A

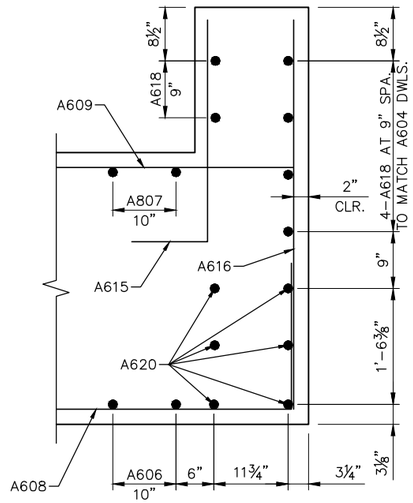

SECTION B–B

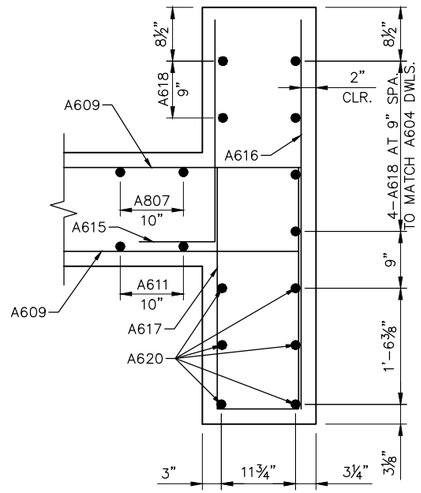

SECTION C–C

NOTES:

F.F. DENOTES FRONT FACE.
B.F. DENOTES BACK FACE.
E.F. DENOTES EACH FACE.

NO.	DATE	BY	CHECK	DESIGN	REVISION / SUBMITTAL

DESIGNED BY: CAD | CHECKED BY: MTC
DRAWN BY: AMC | CHECKED BY: LKZ

AECOM Kimley»Horn

90% SUBMISSION - 01/22/16

METROPOLITAN COUNCIL

SOUTHWEST Green Line LRT Extension

CIVIL - VOLUME 4F
CEDAR LAKE TRAIL - BELTLINE STATION
BRIDGE R0692 (TRL)
WEST ABUTMENT REINFORCEMENT 2

DISCIPLINE: STRUCTURES

SHEET NAME: CBRR0692-BRG-ABT-004

SHEET 11 OF 60

Jan, 13 2016 03:42 pm v:\3400_ADC\CAD\SEGMENT E2\PLAN SHEETS\STRUCTURES\CLRT-TRL\CBRR0692-BRG-ABT-004.dwg By: Caitlyn.Deutsch

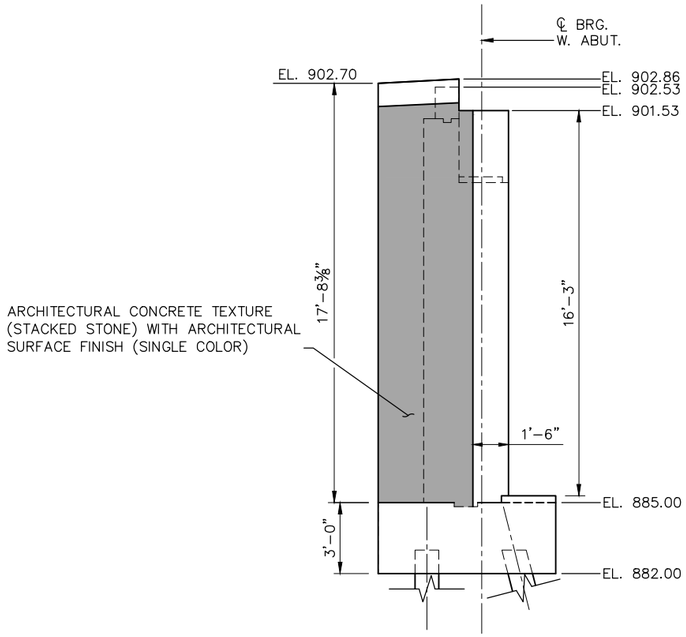

SOUTH WINGWALL ELEVATION

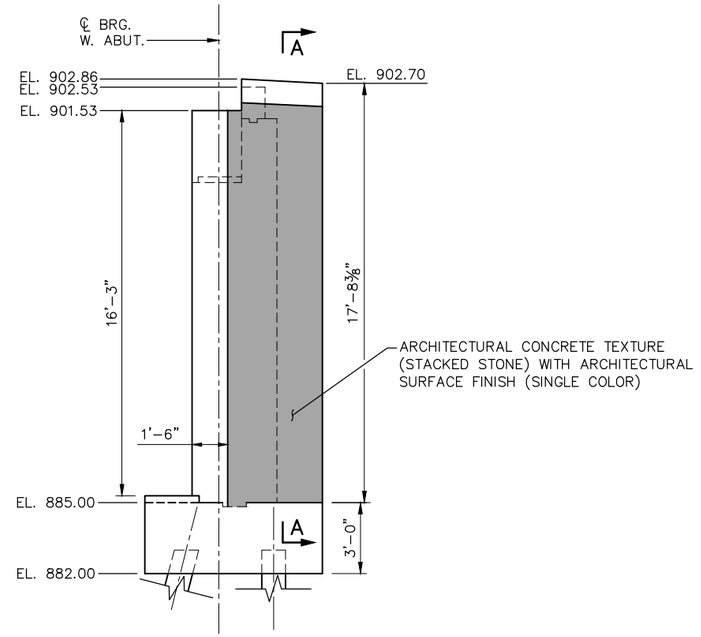

NORTH WINGWALL ELEVATION

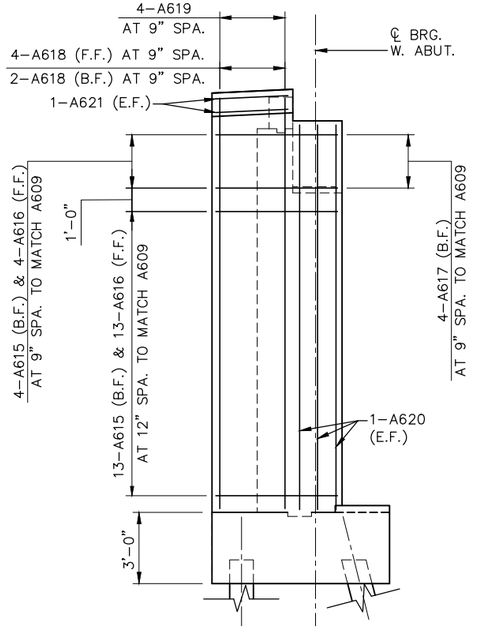

SOUTH WINGWALL REINFORCEMENT

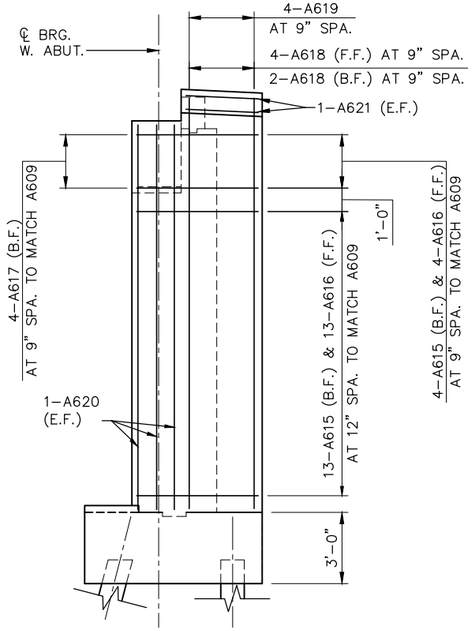

NORTH WINGWALL REINFORCEMENT

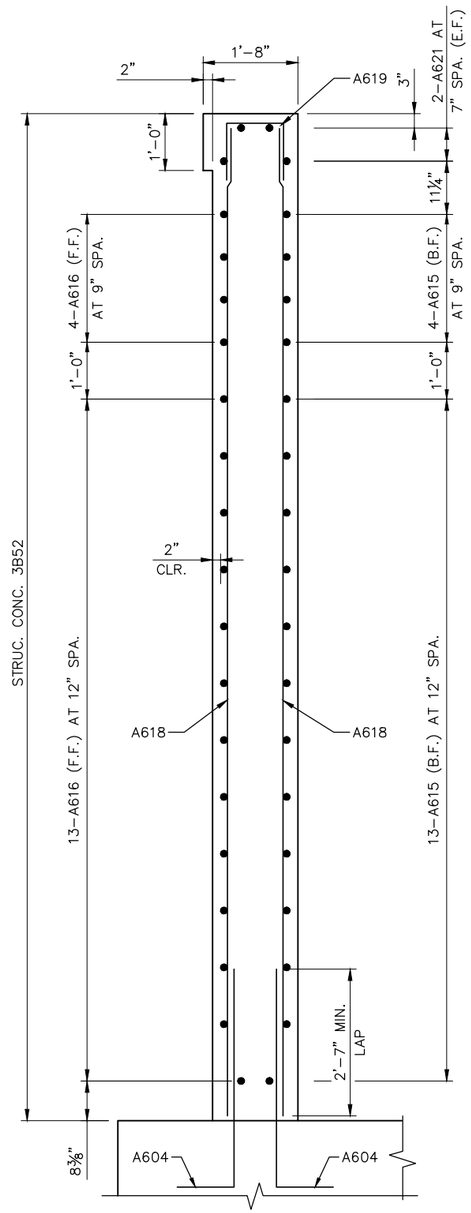

SECTION A–A

NOTES:

F.F. DENOTES FRONT FACE.
B.F. DENOTES BACK FACE.
E.F. DENOTES EACH FACE.

NO.	DATE	BY	CHECK	DESIGN	REVISION / SUBMITTAL

DESIGNED BY: CAD | CHECKED BY: MTC
DRAWN BY: AMC | CHECKED BY: LKZ

AECOM Kimley»Horn

90% SUBMISSION - 01/22/16

METROPOLITAN COUNCIL

SOUTHWEST Green Line LRT Extension

CIVIL - VOLUME 4F
CEDAR LAKE TRAIL - BELTLINE STATION BRIDGE R0692 (TRL)
WEST ABUTMENT WINGWALLS

DISCIPLINE: STRUCTURES

SHEET NAME: CBRR0692-BRG-ABT-005

SHEET 12 OF 60

Jan, 13 2016 03:43 pm V:\3400_ADC\CAD\SEGMENT E2\PLAN SHEETS\STRUCTURES\CLRT-TRL\CBRR0692-BRG-ABT-005.dwg By: Caitlyn.Deutsch

BILL OF REINFORCEMENT FOR WEST ABUTMENT				
BAR	NO.	LENGTH	SHAPE	LOCATION
A601	27	9'-0"	BENT	FOOTING, TRANS. BOT.
A602	27	9'-0"	BENT	FOOTING, TRANS. TOP
A803	18	25'-8"	BENT	FOOTING, LONG.
A604	42	5'-6"	BENT	DOWEL (F.F.)
A805	22	7'-7"	BENT	DOWEL (B.F.)
A606	22	12'-10"	STR.	VERTICAL (F.F.)
A807	22	16'-0"	STR.	VERTICAL (B.F.)
A608	13	22'-8"	BENT	STEM HORIZONTAL (F.F.)
A609	25	20'-8"	STR.	HORIZONTAL (F.F.)(B.F.)
A610	26	5'-3"	BENT	SEAT TRANSVERSE
A611	22	4'-2"	STR.	BACKWALL VERTICAL (F.F.)
A612	22	3'-2"	BENT	BACKWALL TOP
A613	2	17'-8"	STR.	PAVING BLOCK, HORIZONTAL
A614	22	4'-10"	BENT	PAVING BLOCK, VERTICAL
A615	34	3'-9"	BENT	WINGWALL HORIZONTAL (B.F.)
A616	34	5'-1"	STR.	WINGWALL HORIZONTAL (F.F.)
A617	8	7'-8"	BENT	MASKWALL HORIZONTAL
A618	12	17'-4"	STR.	WINGWALL VERTICAL (E.F.)
A619	8	3'-0"	BENT	WINGWALL TIE
A620	12	16'-3"	STR.	CORNER VERTICAL (E.F.)
A621	8	3'-1"	STR.	WINGWALL HORIZONTAL (E.F.)
A622	8	5'-1"	BENT	PEDESTAL
A623	12	4'-5"	BENT	PEDESTAL

NOTES:

BENT BAR DIMENSIONS GIVEN ARE OUT-TO-OUT. ACTUAL BAR LENGTHS SHALL BE DETERMINED BASED ON THE DETAIL DIMENSIONS SHOWN IN THE BAR BENDING DIAGRAMS. TOTAL BAR LENGTHS ARE SHOWN FOR USE IN COMPUTING REINFORCEMENT BAR WEIGHTS FOR PAYMENT ONLY.

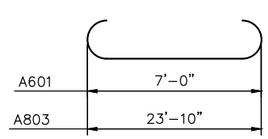

A601, A803

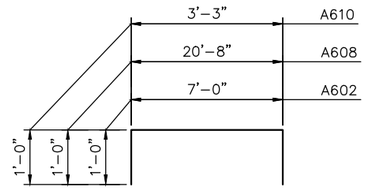

A602, A608, A610

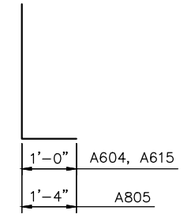

A604, A805, A615

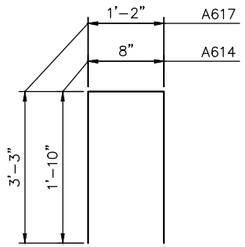

A614, A617

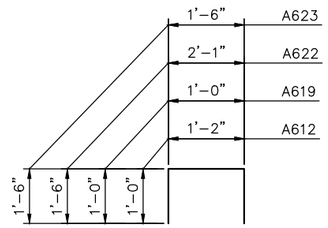

A612, A619, A622, A623

BAR BENDING DIAGRAMS

NO.	DATE	BY	CHECK	DESIGN	REVISION / SUBMITTAL

DESIGNED BY: CAD | CHECKED BY: MTC
DRAWN BY: AMC | CHECKED BY: LKZ

AECOM Kimley»Horn

90% SUBMISSION - 01/22/16

METROPOLITAN COUNCIL

SOUTHWEST Green Line LRT Extension

CIVIL - VOLUME 4F
CEDAR LAKE TRAIL - BELTLINE STATION
BRIDGE R0692 (TRL)
WEST ABUTMENT REINFORCEMENT 3

DISCIPLINE: STRUCTURES
SHEET NAME: CBRR0692-BRG-TRN-002

SHEET 13 OF 60

Jan, 13 2016 03:44 pm V:\3400_ADC\CAD\SEGMENT E2\PLAN SHEETS\STRUCTURES\CLRT-TRL\CBRR0692-BRG-TRN-002.dwg By: Caitlyn.Deutsch

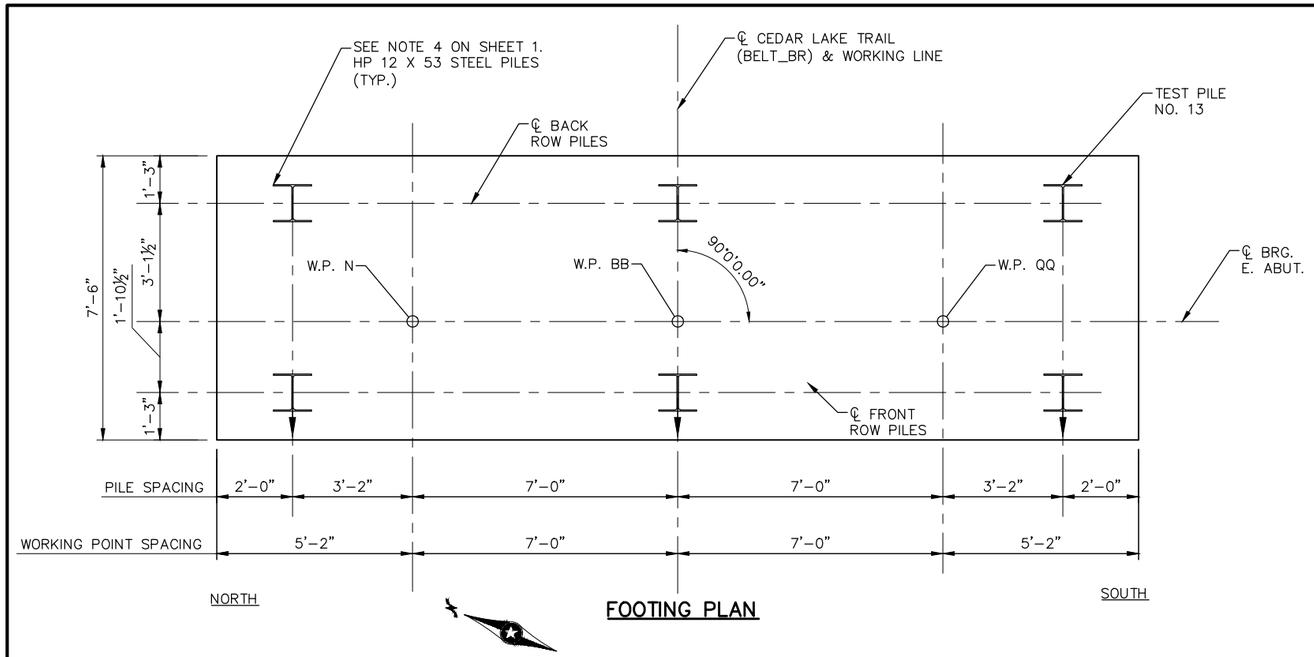

FOOTING PLAN

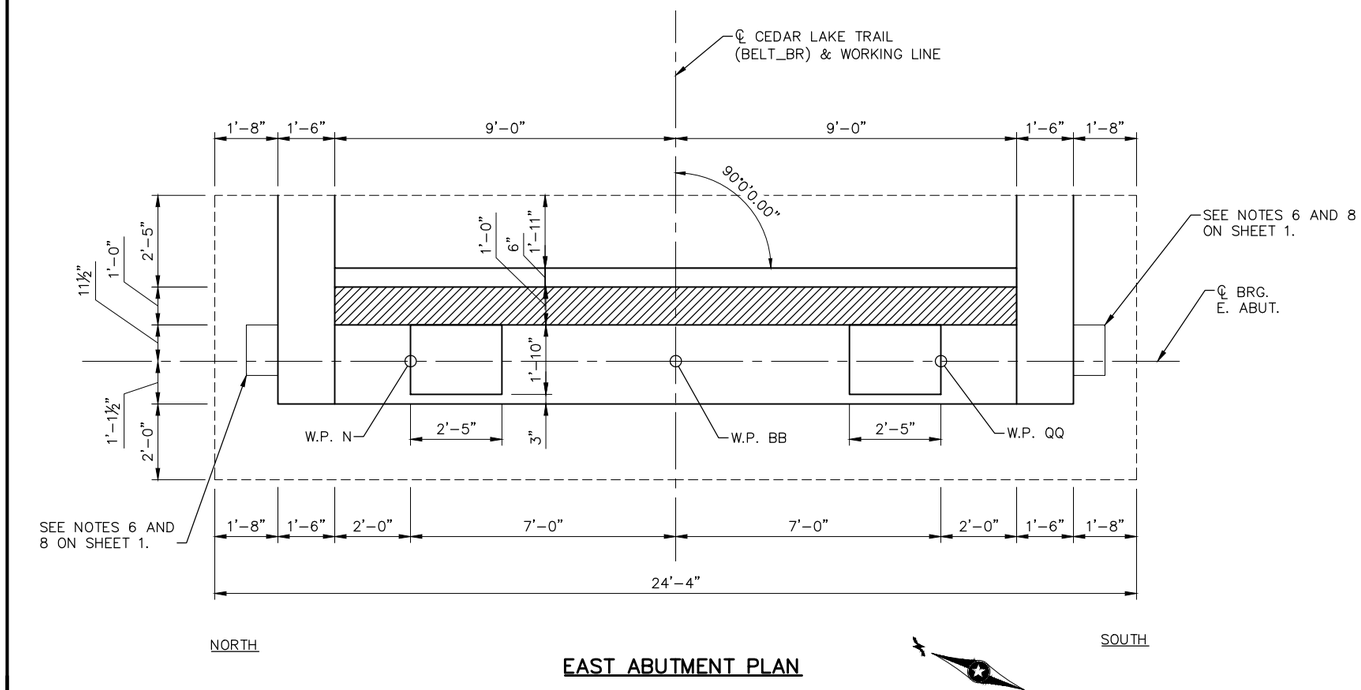

EAST ABUTMENT PLAN

EAST ABUTMENT COMPUTED PILE LOAD - TONS/PILE	
FACTORED DEAD LOAD + EARTH PRESSURE	113
FACTORED LIVE LOAD	12
*FACTORED DESIGN LOAD	125
* BASED ON STRENGTH V LOAD COMBINATION.	

WEST ABUTMENT REQUIRED NOMINAL PILE BEARING RESISTANCE FOR H-PILES Rn - TONS/PILE		
FIELD CONTROL METHOD	φdyn	*Rn
MN/DOT PILE FORMULA 2012 (MPF12) $R_n = 20\sqrt{\frac{W \times H}{1000}} x log\left(\frac{10}{S}\right)$	0.60	151
PDA	0.65	140
* Rn = (FACTORED DESIGN LOAD) / φdyn		

GENERAL PILE NOTES:

1 HP 12 X 53 TEST PILES 70 FT. LONG
5 HP 12 X 53 PILES EST. LENGTH 60 FT.
6 HP 12 X 53 PILES REQ'D FOR EAST ABUT.

PILE SPACING SHOWN IS AT BOTTOM OF FOOTING.

PILES MARKED THUS ⊥ TO BE BATTERED 3" PER FOOT IN DIRECTION SHOWN.

PILES ARE TO BE HP 12 X 53 WITH PILE TIP PROTECTION.

FOR PILE SPLICE DETAIL SEE DETAIL B202.

NO.	DATE	BY	CHECK	DESIGN	REVISION / SUBMITTAL

DESIGNED BY: CAD | CHECKED BY: MTC
DRAWN BY: AMC | CHECKED BY: LKZ

AECOM Kimley»Horn

90% SUBMISSION - 01/22/16

METROPOLITAN COUNCIL

SOUTHWEST Green Line LRT Extension

CIVIL - VOLUME 4F
CEDAR LAKE TRAIL - BELTLINE STATION
BRIDGE R0692 (TRL)
EAST ABUTMENT DETAILS 1

DISCIPLINE: STRUCTURES
SHEET NAME: CBRR0692-BRG-ABT-006

SHEET 14 OF 60

Jan, 13 2016 03:44 pm V:\3400_ADC\CAD\SEGMENT E2\PLAN SHEETS\STRUCTURES\CLRT-TRL\CBRR0692-BRG-ABT-006.dwg By: Caitlyn.Deutsch

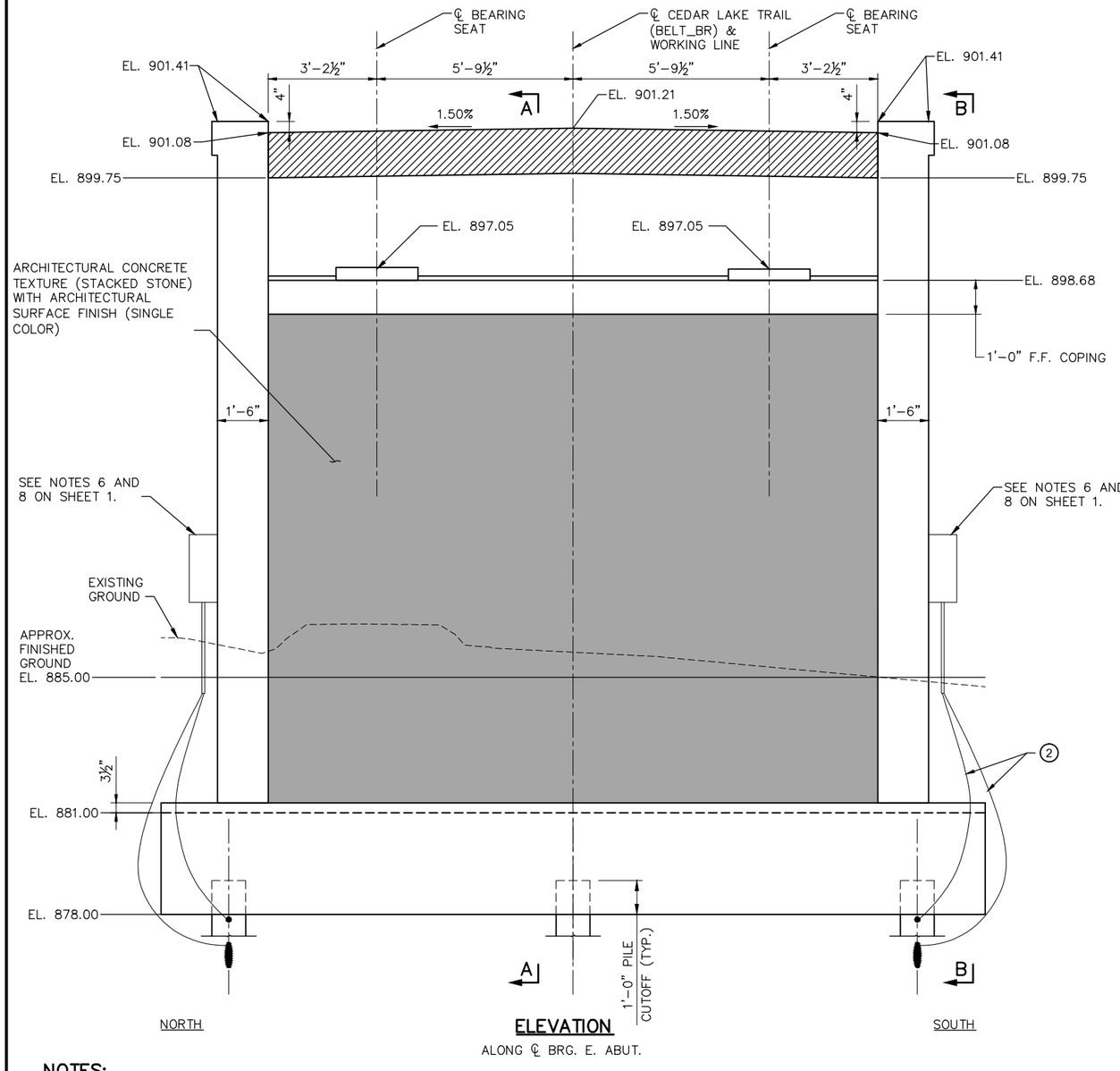

ELEVATION

ALONG ℄ BRG. E. ABUT.

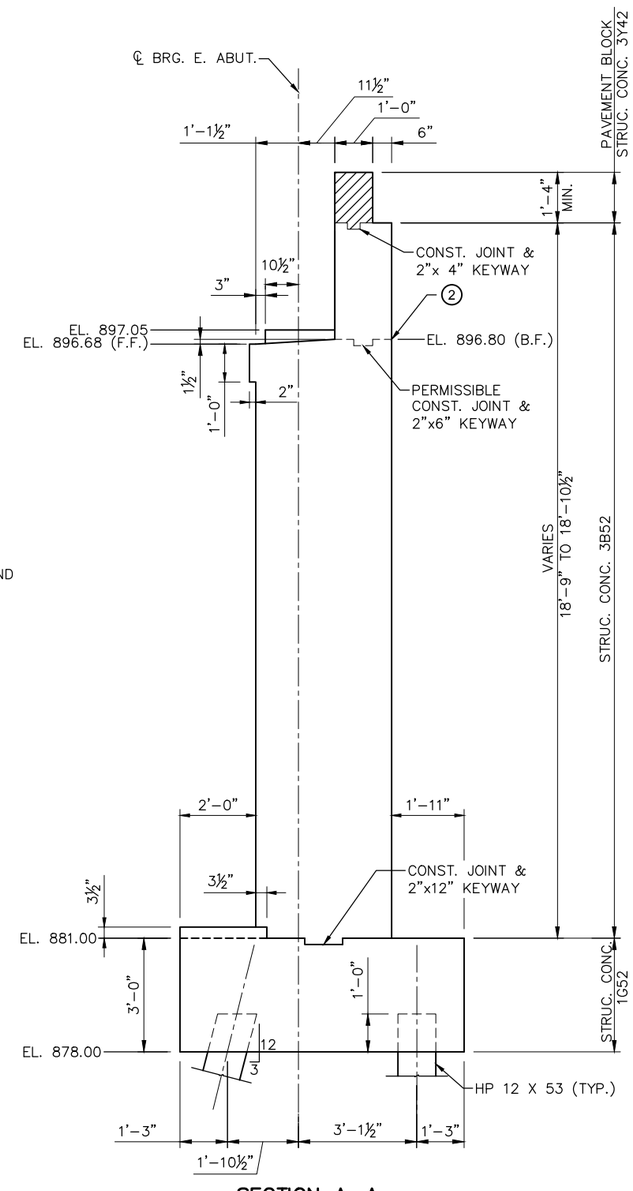

SECTION A–A

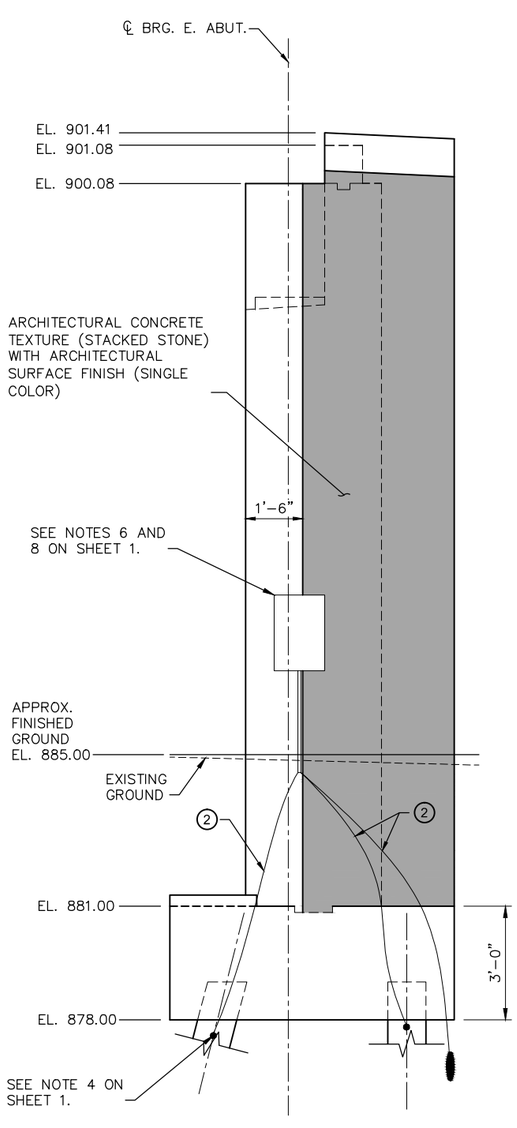

SECTION B–B

NOTES:

1. 3–PLY JOINT WATERPROOFING IF CONSTRUCTION JOINT IS USED
2. #1/0 CABLE WELDED TO CORNER PILE

   SIDES OF SHEAR KEY TO BE VERTICAL AND TOP OF SHEAR KEY TO BE LEVEL IN BOTH DIRECTIONS

NO.	DATE	BY	CHECK	DESIGN	REVISION / SUBMITTAL

DESIGNED BY: CAD | CHECKED BY: MTC
DRAWN BY: AMC | CHECKED BY: LKZ

AECOM Kimley»Horn

90% SUBMISSION - 01/22/16

METROPOLITAN COUNCIL

SOUTHWEST Green Line LRT Extension

CIVIL - VOLUME 4F
CEDAR LAKE TRAIL - BELTLINE STATION BRIDGE R0692 (TRL)
EAST ABUTMENT DETAILS 2

DISCIPLINE: STRUCTURES

SHEET NAME: CBRR0692-BRG-ABT-007

SHEET 15 OF 60

Jan, 13 2016 03:45 pm V:\3400_ADC\CAD\SEGMENT E2\PLAN SHEETS\STRUCTURES\CLRT-TRL\CBRR0692-BRG-ABT-007.dwg By: Caitlyn.Deutsch

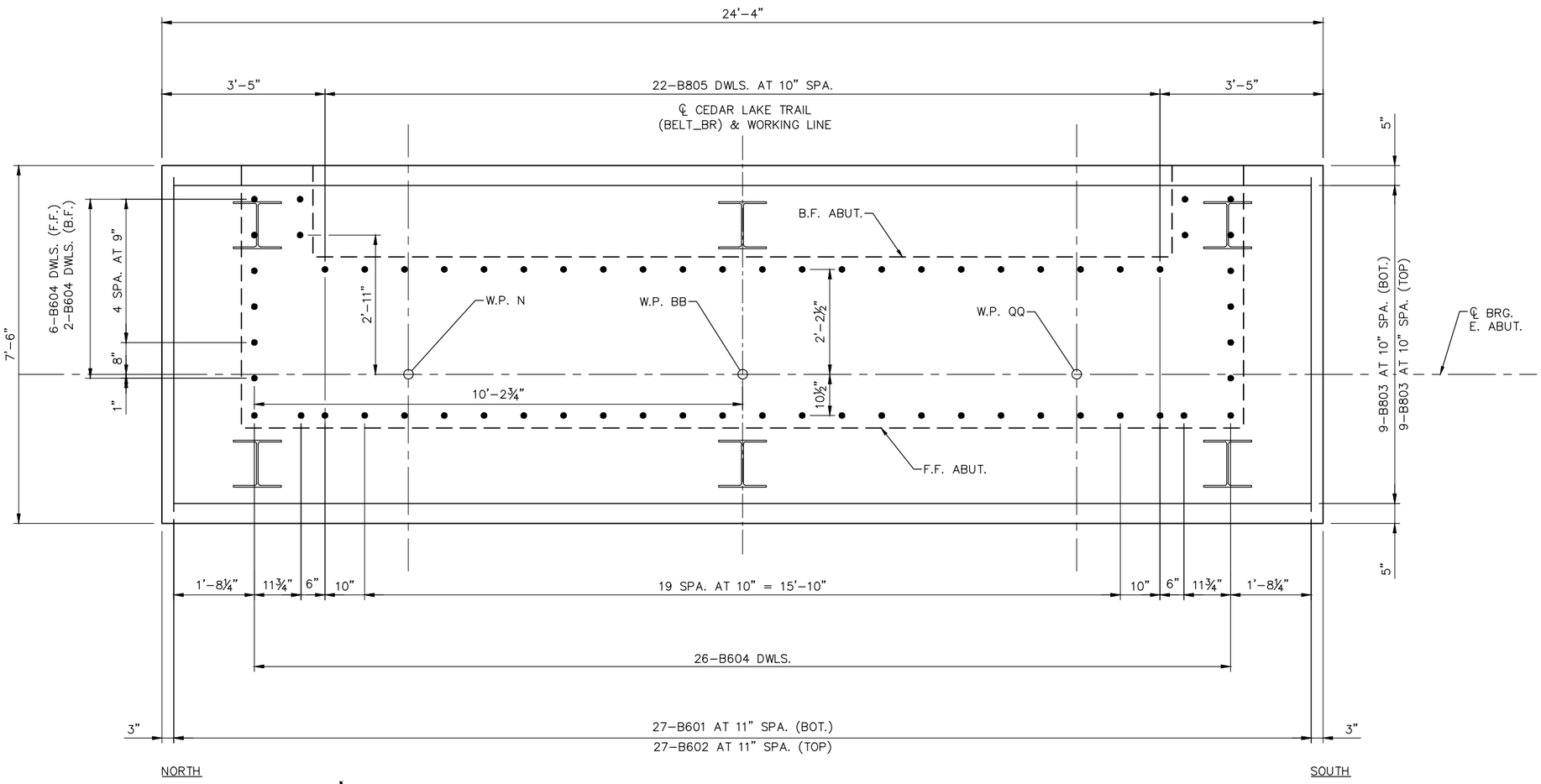

FOOTING PLAN

BAR SPACING OR CALL-OUTS NOT SHOWN ARE SYMMETRIC ABOUT ℄

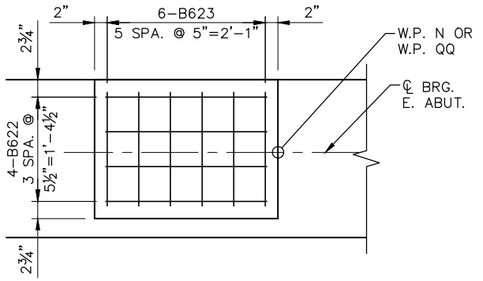

TYPICAL PEDESTAL PLAN

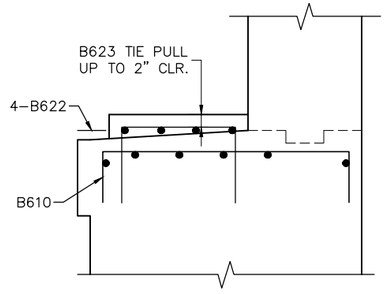

TYPICAL PEDESTAL SECTION

NOTES:

F.F. DENOTES FRONT FACE.
B.F. DENOTES BACK FACE.
E.F. DENOTES EACH FACE.

NO.	DATE	BY	CHECK	DESIGN	REVISION / SUBMITTAL

DESIGNED BY: CAD | CHECKED BY: MTC
DRAWN BY: AMC | CHECKED BY: LKZ

AECOM Kimley»Horn

90% SUBMISSION - 01/22/16

METROPOLITAN COUNCIL

SOUTHWEST Green Line LRT Extension

CIVIL - VOLUME 4F
CEDAR LAKE TRAIL - BELTLINE STATION
BRIDGE R0692 (TRL)
EAST ABUTMENT REINFORCEMENT 1

DISCIPLINE: STRUCTURES
SHEET NAME: CBRR0692-BRG-ABT-008

SHEET 16 OF 60

Jan, 13 2016 03:45 pm V:\3400_ADC\CAD\SEGMENT E2\PLAN SHEETS\STRUCTURES\CLRT-TRL\CBRR0692-BRG-ABT-008.dwg By: Caitlyn.Deutsch

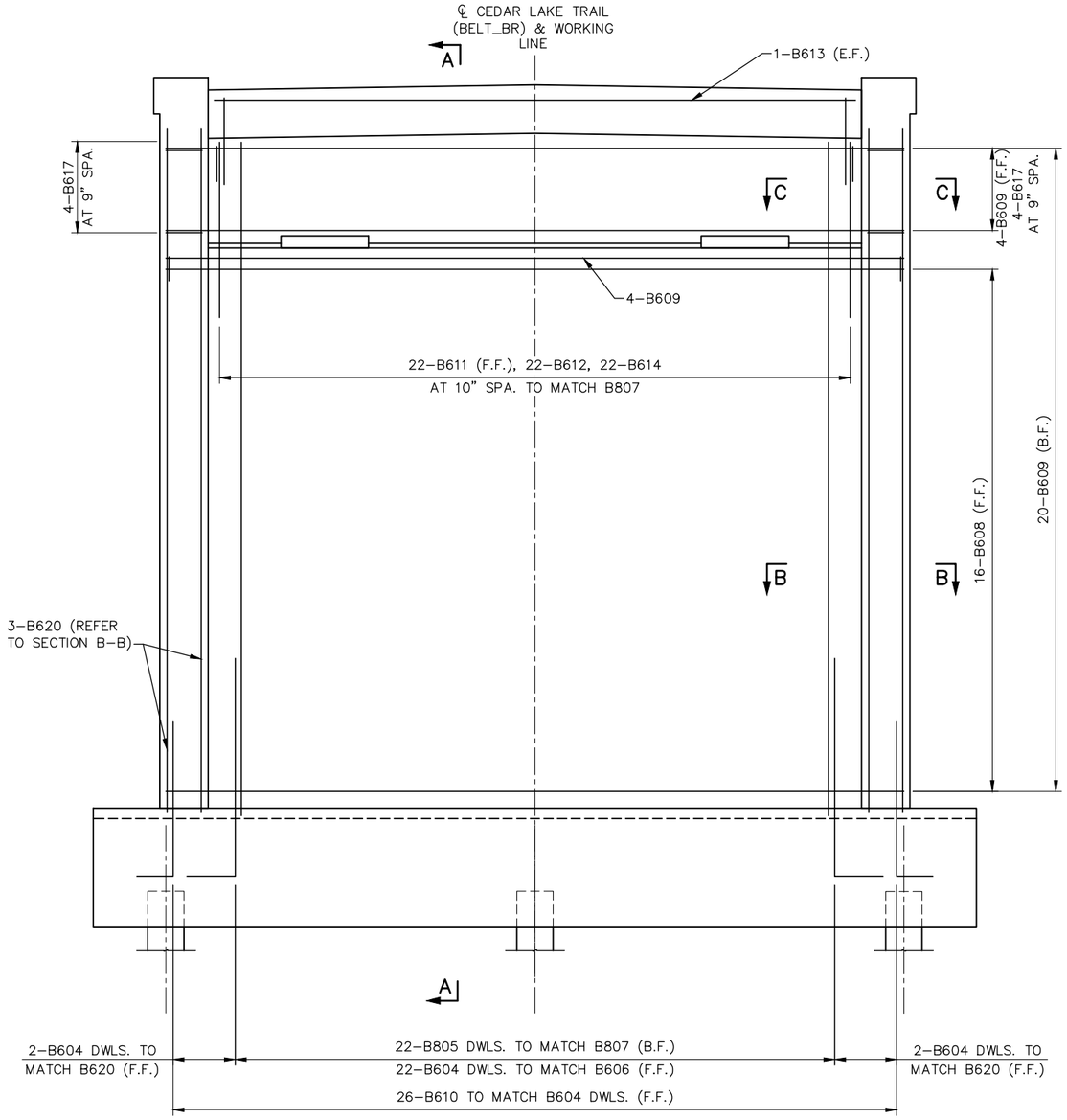

ELEVATION

CALL–OUTS NOT SHOWN ARE SYMMETRIC ABOUT ℄

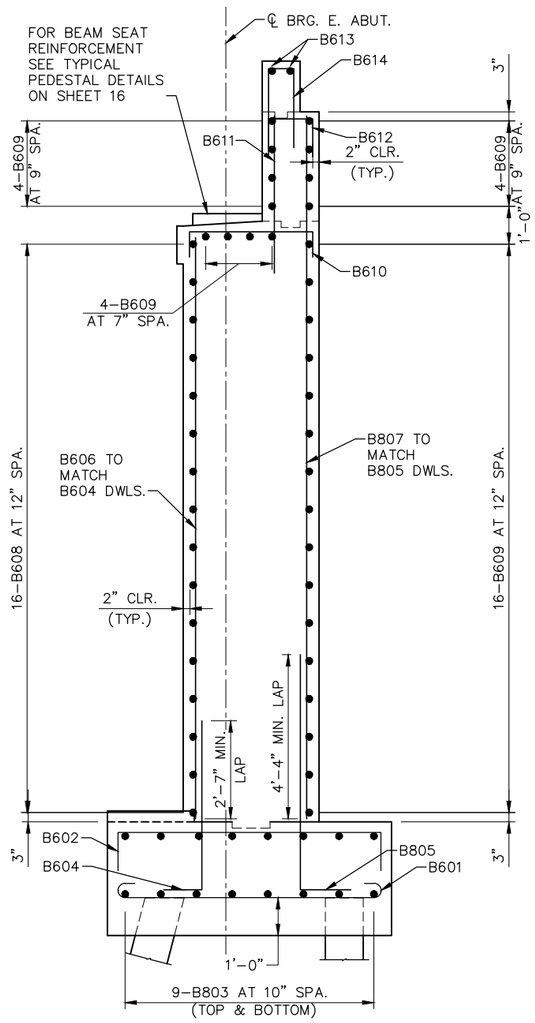

SECTION A–A

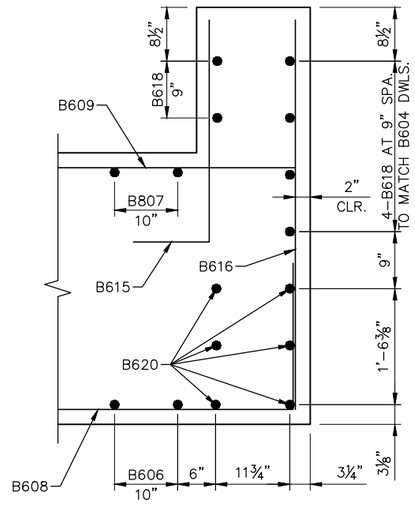

SECTION B–B

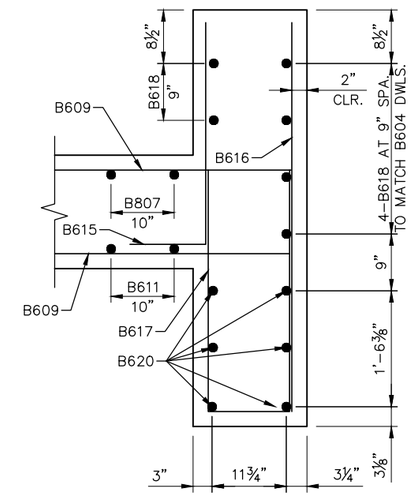

SECTION C–C

NOTES:

F.F. DENOTES FRONT FACE.
B.F. DENOTES BACK FACE.
E.F. DENOTES EACH FACE.

NO.	DATE	BY	CHECK	DESIGN	REVISION / SUBMITTAL

DESIGNED BY: CAD | CHECKED BY: MTC
DRAWN BY: AMC | CHECKED BY: LKZ

AECOM Kimley»Horn

90% SUBMISSION - 01/22/16

METROPOLITAN COUNCIL

SOUTHWEST Green Line LRT Extension

CIVIL - VOLUME 4F
CEDAR LAKE TRAIL - BELTLINE STATION
BRIDGE R0692 (TRL)
EAST ABUTMENT REINFORCEMENT 2

DISCIPLINE: STRUCTURES
SHEET NAME: CBRR0692-BRG-ABT-009

SHEET 17 OF 60

Jan, 13 2016 03:46 pm V:\3400_ADC\CAD\SEGMENT E2\PLAN SHEETS\STRUCTURES\CLRT-TRL\CBRR0692-BRG-ABT-009.dwg By: Caitlyn.Deutsch

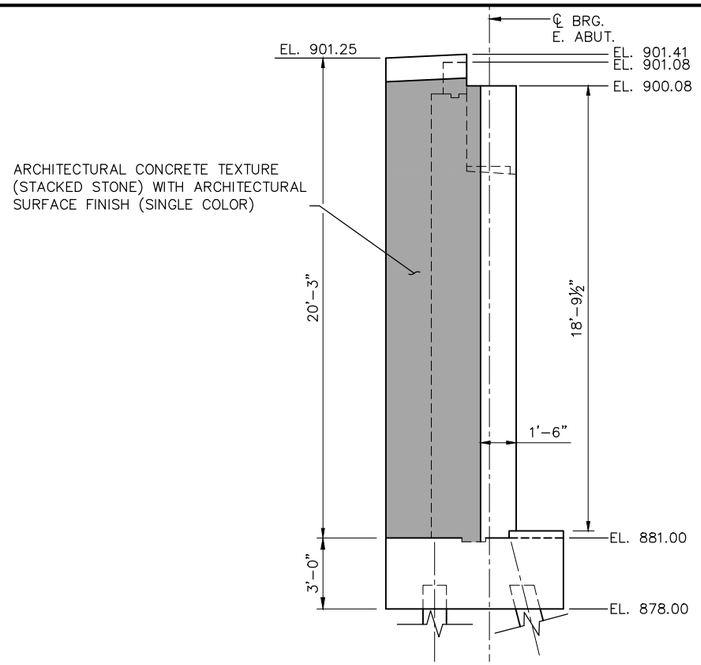

NORTH WINGWALL ELEVATION

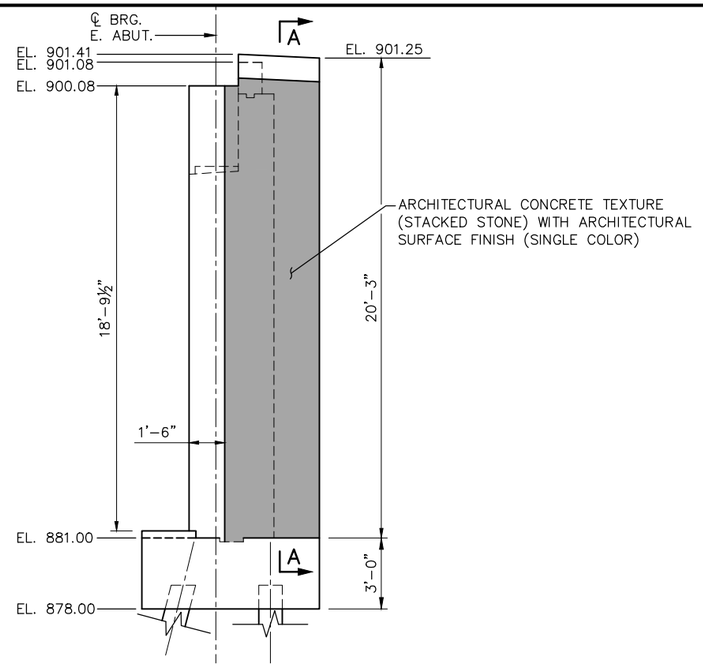

SOUTH WINGWALL ELEVATION

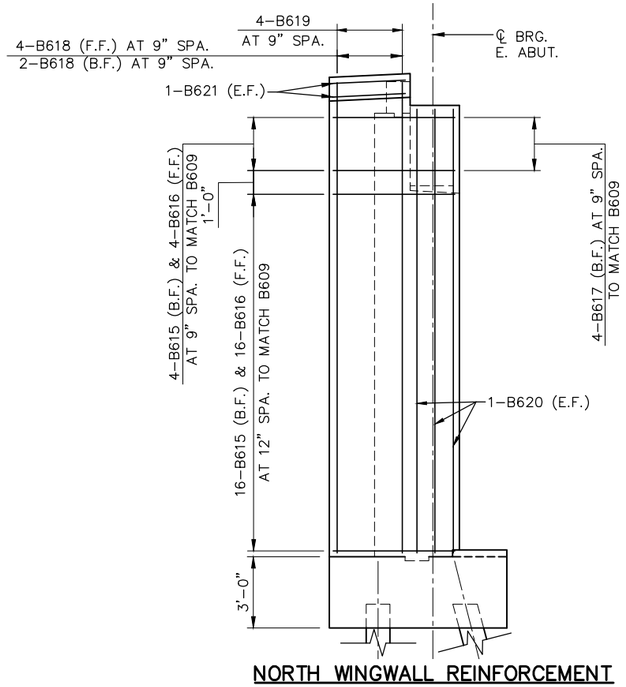

NORTH WINGWALL REINFORCEMENT

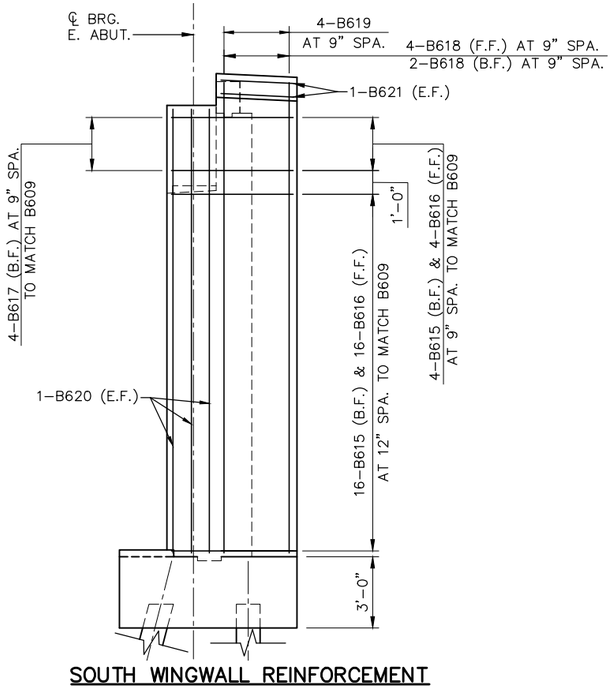

SOUTH WINGWALL REINFORCEMENT

NOTES:

F.F. DENOTES FRONT FACE.
B.F. DENOTES BACK FACE.
E.F. DENOTES EACH FACE.

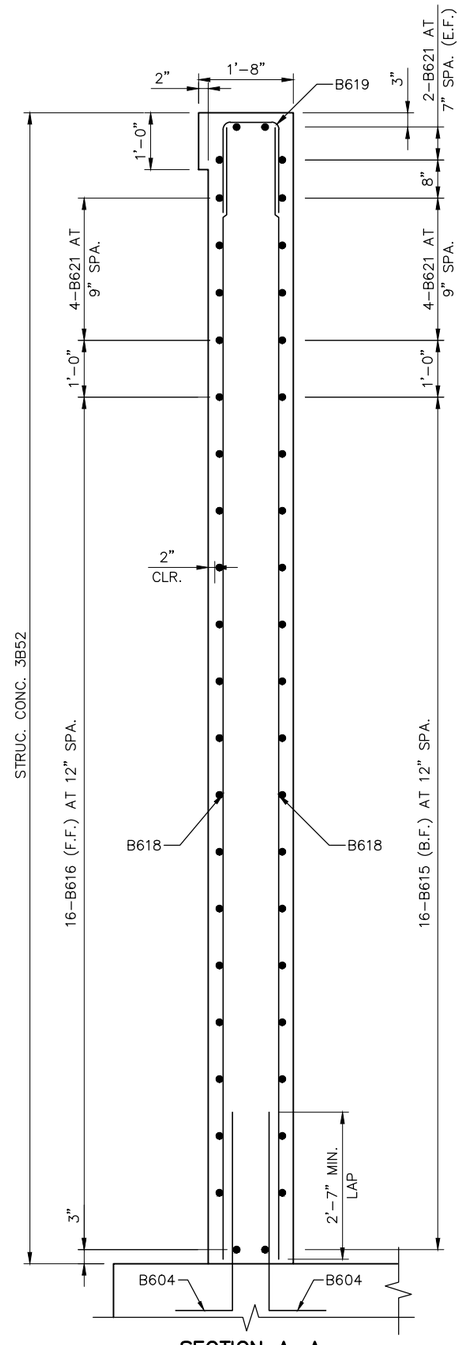

SECTION A–A

NO.	DATE	BY	CHECK	DESIGN	REVISION / SUBMITTAL

DESIGNED BY: CAD | CHECKED BY: MTC
DRAWN BY: AMC | CHECKED BY: LKZ

AECOM Kimley»Horn

90% SUBMISSION - 01/22/16

METROPOLITAN COUNCIL

SOUTHWEST Green Line LRT Extension

CIVIL - VOLUME 4F
CEDAR LAKE TRAIL - BELTLINE STATION
BRIDGE R0692 (TRL)
EAST ABUTMENT WINGWALLS

DISCIPLINE: STRUCTURES
SHEET NAME: CBRR0692-BRG-ABT-010

SHEET 18 OF 60

Jan, 13 2016 03:47 pm V:\3400_ADC\CAD\SEGMENT E2\PLAN SHEETS\STRUCTURES\CLRT-TRL\CBRR0692-BRG-ABT-010.dwg By: Caitlyn.Deutsch

BILL OF REINFORCEMENT FOR EAST ABUTMENT				
BAR	NO.	LENGTH	SHAPE	LOCATION
B601	27	9'-0"	BENT	FOOTING, TRANS. BOT.
B602	27	9'-0"	BENT	FOOTING, TRANS. TOP
B803	18	25'-8"	BENT	FOOTING, LONG.
B604	42	5'-6"	BENT	DOWEL (F.F.)
B805	22	7'-7"	BENT	DOWEL (B.F.)
B606	22	15'-4"	STR.	VERTICAL (F.F.)
B807	22	18'-7"	STR.	VERTICAL (B.F.)
B608	16	22'-8"	BENT	STEM HORIZONTAL (F.F.)
B609	28	20'-8"	STR.	HORIZONTAL (F.F.)(B.F.)
B610	26	5'-3"	BENT	SEAT TRANSVERSE
B611	22	4'-2"	STR.	BACKWALL VERTICAL (F.F.)
B612	22	3'-2"	BENT	BACKWALL TOP
B613	2	17'-8"	STR.	PAVING BLOCK, HORIZONTAL
B614	22	4'-10"	BENT	PAVING BLOCK, VERTICAL
B615	40	3'-9"	BENT	WINGWALL HORIZONTAL (B.F.)
B616	40	5'-1"	STR.	WINGWALL HORIZONTAL (F.F.)
B617	8	7'-8"	BENT	MASKWALL HORIZONTAL
B618	12	19'-11"	STR.	WINGWALL VERTICAL (E.F.)
B619	8	3'-0"	BENT	WINGWALL TIE
B620	12	18'-10"	STR.	CORNER VERTICAL (E.F.)
B621	8	3'-1"	STR.	WINGWALL HORIZONTAL (E.F.)
B622	8	5'-1"	BENT	PEDESTAL
B623	12	4'-5"	BENT	PEDESTAL

NOTES:

BENT BAR DIMENSIONS GIVEN ARE OUT-TO-OUT. ACTUAL BAR LENGTHS SHALL BE DETERMINED BASED ON THE DETAIL DIMENSIONS SHOWN IN THE BAR BENDING DIAGRAMS. TOTAL BAR LENGTHS ARE SHOWN FOR USE IN COMPUTING REINFORCEMENT BAR WEIGHTS FOR PAYMENT ONLY.

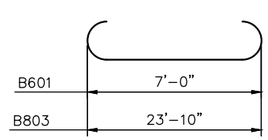

B601, B803

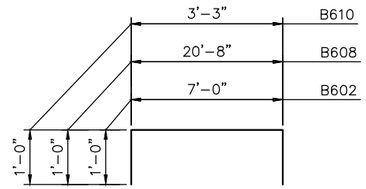

B602, B608, B610

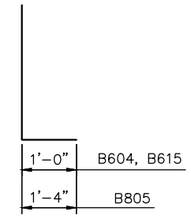

B604, B805, B615

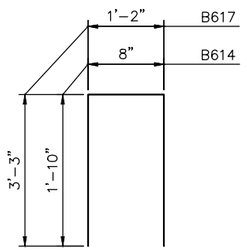

B614, B617

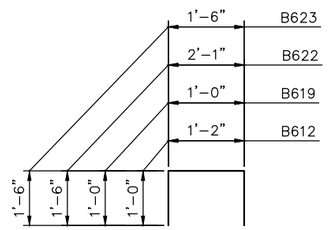

B612, B619, B622, B623

BAR BENDING DIAGRAMS

NO.	DATE	BY	CHECK	DESIGN	REVISION / SUBMITTAL

DESIGNED BY: CAD | CHECKED BY: MTC
DRAWN BY: AMC | CHECKED BY: LKZ

AECOM Kimley»Horn

90% SUBMISSION - 01/22/16

METROPOLITAN COUNCIL

SOUTHWEST Green Line LRT Extension

CIVIL - VOLUME 4F
CEDAR LAKE TRAIL - BELTLINE STATION
BRIDGE R0692 (TRL)
EAST ABUTMENT REINFORCEMENT 3

DISCIPLINE: STRUCTURES
SHEET NAME: CBRR0692-BRG-TRN-003

SHEET 19 OF 60

Jan, 13 2016 03:47 pm V:\3400_ADC\CAD\SEGMENT E2\PLAN SHEETS\STRUCTURES\CLRT-TRL\CBRR0692-BRG-TRN-003.dwg By: Caitlyn.Deutsch

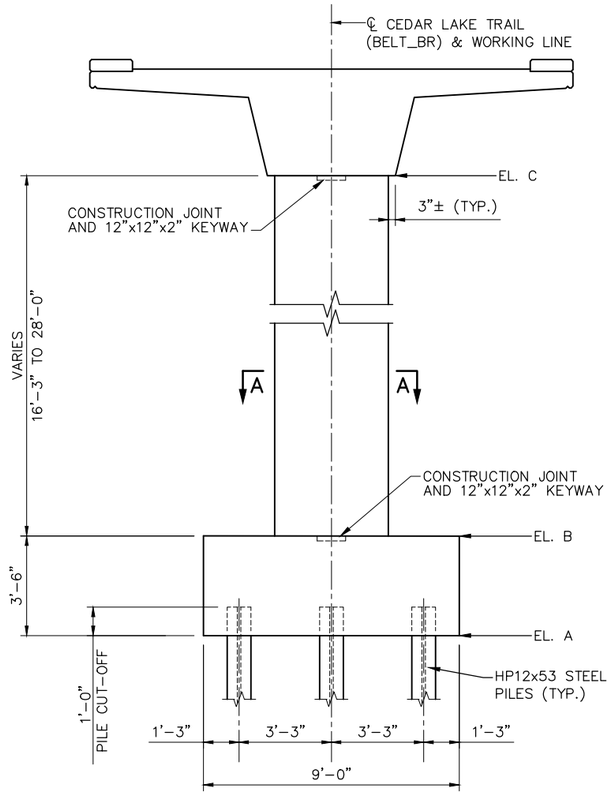

ELEVATION

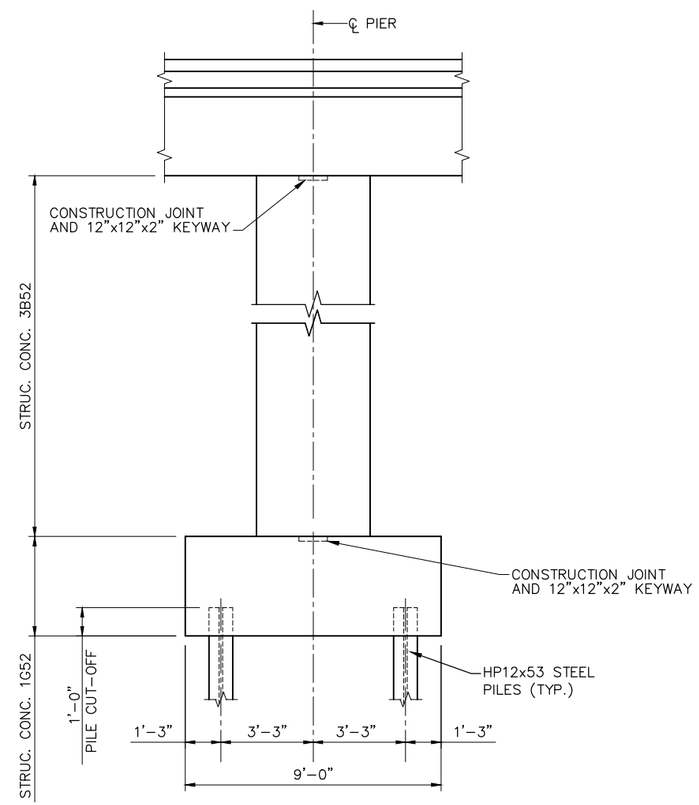

END VIEW

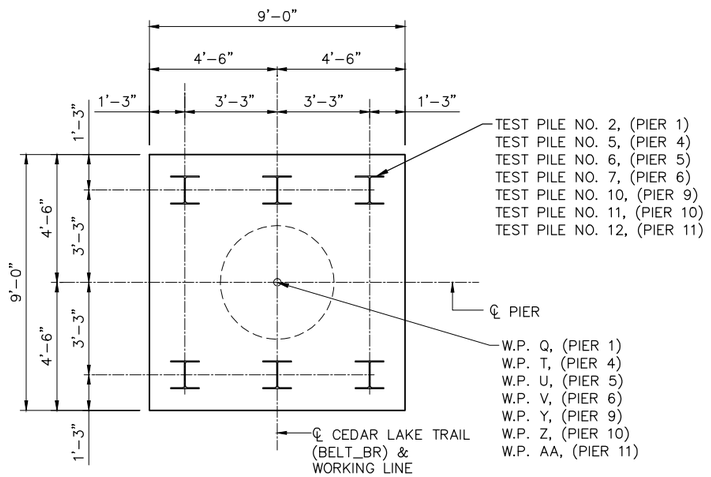

FOOTING PLAN

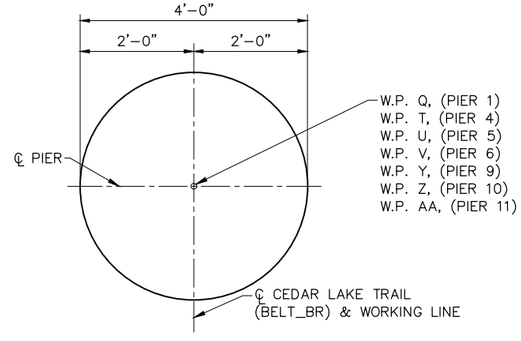

SECTION A–A

PIERS 1, 4-6, 9-11 COMPUTED PILE LOAD - TONS/PILE	
FACTORED DEAD LOAD + EARTH PRESSURE	94
FACTORED LIVE LOAD	16
*FACTORED DESIGN LOAD	110
* BASED ON STRENGTH V LOAD COMBINATION.	

PIERS 1, 4-6, 9-11 REQUIRED NOMINAL PILE BEARING RESISTANCE FOR H-PILES Rn - TONS/PILE		
FIELD CONTROL METHOD	φdyn	*Rn
MN/DOT PILE FORMULA 2012 (MPF12) $R_n = 20\sqrt{\frac{W \times H}{1000}} \times log\left(\frac{10}{S}\right)$	0.60	151
PDA	0.65	140
* Rn = (FACTORED DESIGN LOAD) / φdyn		

GENERAL PILE NOTES:

1 HP 12 X 53 TEST PILES 75 FT. LONG
5 HP 12 X 53 PILES EST. LENGTH 65 FT.
6 HP 12 X 53 PILES REQ'D FOR EACH PIER

PILE SPACING SHOWN IS AT BOTTOM OF FOOTING.

PILES MARKED THUS ⊥ TO BE BATTERED 3" PER FOOT IN DIRECTION SHOWN.

PILES ARE TO BE HP 12 X 53 WITH PILE TIP PROTECTION.

PIER ELEVATIONS			
	EL. A	EL. B	EL. C
PIER 1	881.50	885.00	901.25
PIER 4	879.13	882.63	907.63
PIER 5	879.06	882.56	908.89
PIER 6	878.66	882.16	910.16
PIER 9	878.12	881.62	904.70
PIER 10	878.25	881.75	902.25
PIER 11	878.63	882.13	899.80

NO.	DATE	BY	CHECK	DESIGN	REVISION / SUBMITTAL

DESIGNED BY: SMY | CHECKED BY: MTC
DRAWN BY: CAD | CHECKED BY: LKZ

AECOM Kimley»Horn

90% SUBMISSION - 01/22/16

METROPOLITAN COUNCIL

SOUTHWEST Green Line LRT Extension

CIVIL - VOLUME 4F
CEDAR LAKE TRAIL - BELTLINE STATION BRIDGE R0692 (TRL)
PIERS 1, 4-6, 9-11 DETAILS

DISCIPLINE: STRUCTURES
SHEET NAME: CBRR0692-BRG-PIR-001

SHEET 20 OF 60

Jan, 13 2016 03:49 pm V:\3400_ADC\CAD\SEGMENT E2\PLAN SHEETS\STRUCTURES\CLRT-TRL\CBRR0692-BRG-PIR-001.dwg By: Caitlyn.Deutsch

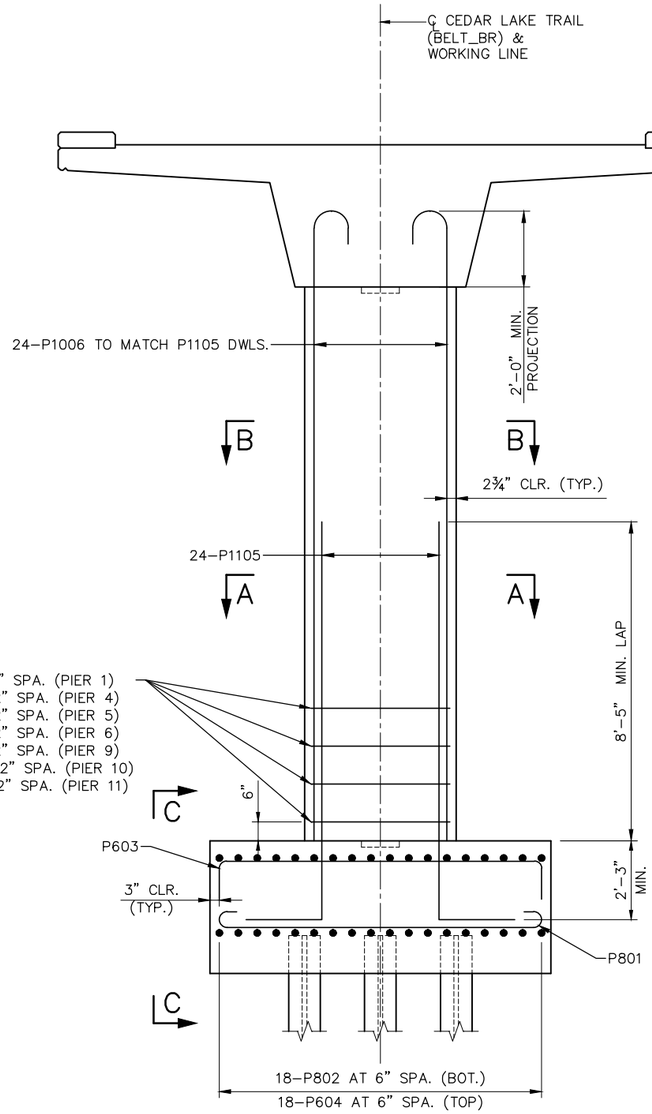

ELEVATION

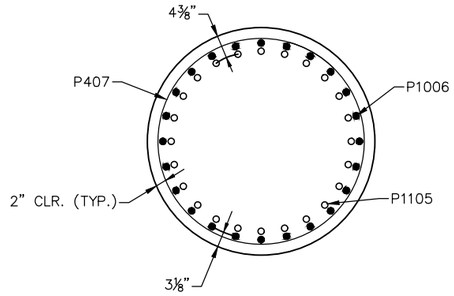

SECTION A–A

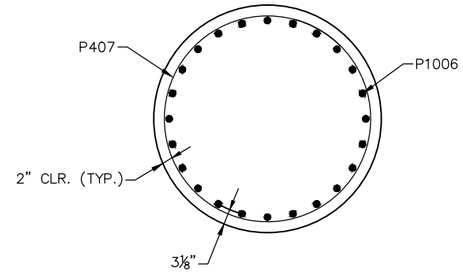

SECTION B–B

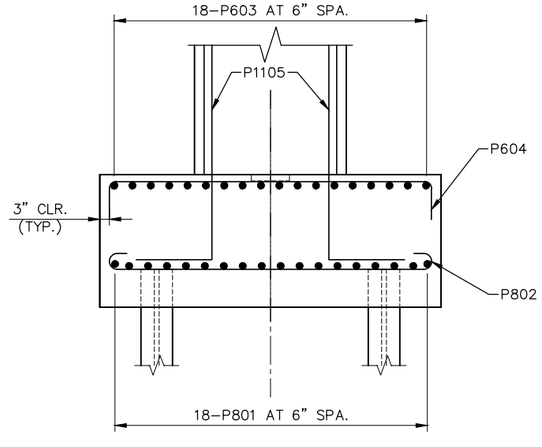

SECTION C–C

NOTES:

F.F. DENOTES FRONT FACE.
B.F. DENOTES BACK FACE.
E.F. DENOTES EACH FACE.

NO.	DATE	BY	CHECK	DESIGN	REVISION / SUBMITTAL

DESIGNED BY: SMY | CHECKED BY: MTC
DRAWN BY: CAD | CHECKED BY: LKZ

AECOM Kimley»Horn

90% SUBMISSION - 01/22/16

METROPOLITAN COUNCIL

SOUTHWEST Green Line LRT Extension

CIVIL - VOLUME 4F
CEDAR LAKE TRAIL - BELTLINE STATION
BRIDGE R0692 (TRL)
PIERS 1, 4-6, 9-11 REINFORCEMENT 1

DISCIPLINE: STRUCTURES
SHEET NAME: CBRR0692-BRG-PIR-002

SHEET 21 OF 60

Jan. 13 2016 03:50 pm V:\3400_ADC\CAD\SEGMENT E2\PLAN SHEETS\STRUCTURES\CLRT-TRL\CBRR0692-BRG-PIR-002.dwg By: Caitlyn.Deutsch

BILL OF REINFORCEMENT FOR PIER 1				
BAR	NO.	LENGTH	SHAPE	LOCATION
1P801	19	10'-4"	BENT	FOOTING TRANSVERSE BOT.
1P802	19	10'-4"	BENT	FOOTING LONGITUDINAL BOT.
1P603	19	10'-6"	BENT	FOOTING TRANSVERSE, TOP
1P604	19	10'-6"	BENT	FOOTING LONGITUDINAL, TOP
1P1105	24	12'-8"	BENT	FOOTING DOWEL BAR
1P1006	24	19'-8"	BENT	COLUMN LONGITUDINAL
1P407	16	14'-0"	BENT	COLUMN TIE

BILL OF REINFORCEMENT FOR PIER 4				
BAR	NO.	LENGTH	SHAPE	LOCATION
4P801	19	10'-4"	BENT	FOOTING TRANSVERSE BOT.
4P802	19	10'-4"	BENT	FOOTING LONGITUDINAL BOT.
4P603	19	10'-6"	BENT	FOOTING TRANSVERSE, TOP
4P604	19	10'-6"	BENT	FOOTING LONGITUDINAL, TOP
4P1105	24	12'-8"	BENT	FOOTING DOWEL BAR
4P1006	24	28'-5"	BENT	COLUMN LONGITUDINAL
4P407	25	14'-0"	BENT	COLUMN TIE

BILL OF REINFORCEMENT FOR PIER 5				
BAR	NO.	LENGTH	SHAPE	LOCATION
5P801	19	10'-4"	BENT	FOOTING TRANSVERSE BOT.
5P802	19	10'-4"	BENT	FOOTING LONGITUDINAL BOT.
5P603	19	10'-6"	BENT	FOOTING TRANSVERSE, TOP
5P604	19	10'-6"	BENT	FOOTING LONGITUDINAL, TOP
5P1105	24	12'-8"	BENT	FOOTING DOWEL BAR
5P1006	24	29'-9"	BENT	COLUMN LONGITUDINAL
5P407	26	14'-0"	BENT	COLUMN TIE

BILL OF REINFORCEMENT FOR PIER 6				
BAR	NO.	LENGTH	SHAPE	LOCATION
6P801	19	10'-4"	BENT	FOOTING TRANSVERSE BOT.
6P802	19	10'-4"	BENT	FOOTING LONGITUDINAL BOT.
6P603	19	10'-6"	BENT	FOOTING TRANSVERSE, TOP
6P604	19	10'-6"	BENT	FOOTING LONGITUDINAL, TOP
6P1105	24	12'-8"	BENT	FOOTING DOWEL BAR
6P1006	24	31'-5"	BENT	COLUMN LONGITUDINAL
6P407	28	14'-0"	BENT	COLUMN TIE

BILL OF REINFORCEMENT FOR PIER 9				
BAR	NO.	LENGTH	SHAPE	LOCATION
9P801	19	10'-4"	BENT	FOOTING TRANSVERSE BOT.
9P802	19	10'-4"	BENT	FOOTING LONGITUDINAL BOT.
9P603	19	10'-6"	BENT	FOOTING TRANSVERSE, TOP
9P604	19	10'-6"	BENT	FOOTING LONGITUDINAL, TOP
9P1105	24	12'-8"	BENT	FOOTING DOWEL BAR
9P1006	24	26'-6"	BENT	COLUMN LONGITUDINAL
9P407	23	14'-0"	BENT	COLUMN TIE

BILL OF REINFORCEMENT FOR PIER 10				
BAR	NO.	LENGTH	SHAPE	LOCATION
10P801	19	10'-4"	BENT	FOOTING TRANSVERSE BOT.
10P802	19	10'-4"	BENT	FOOTING LONGITUDINAL BOT.
10P603	19	10'-6"	BENT	FOOTING TRANSVERSE, TOP
10P604	19	10'-6"	BENT	FOOTING LONGITUDINAL, TOP
10P1105	24	12'-8"	BENT	FOOTING DOWEL BAR
10P1006	24	23'-11"	BENT	COLUMN LONGITUDINAL
10P407	20	14'-0"	BENT	COLUMN TIE

BILL OF REINFORCEMENT FOR PIER 11				
BAR	NO.	LENGTH	SHAPE	LOCATION
11P801	19	10'-4"	BENT	FOOTING TRANSVERSE BOT.
11P802	19	10'-4"	BENT	FOOTING LONGITUDINAL BOT.
11P603	19	10'-6"	BENT	FOOTING TRANSVERSE, TOP
11P604	19	10'-6"	BENT	FOOTING LONGITUDINAL, TOP
11P1105	24	12'-8"	BENT	FOOTING DOWEL BAR
11P1006	24	21'-1"	BENT	COLUMN LONGITUDINAL
11P407	18	14'-0"	BENT	COLUMN TIE

NOTES:

BENT BAR DIMENSIONS GIVEN ARE OUT-TO-OUT. ACTUAL BAR LENGTHS SHALL BE DETERMINED BASED ON THE DETAIL DIMENSIONS SHOWN IN THE BAR BENDING DIAGRAMS. TOTAL BAR LENGTHS ARE SHOWN FOR USE IN COMPUTING REINFORCEMENT BAR WEIGHTS FOR PAYMENT ONLY.

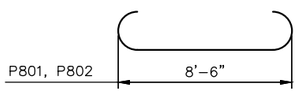

P801, P802

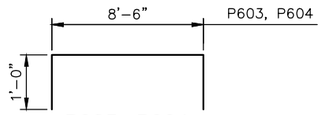

P603, P604



P1105

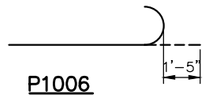

P1006

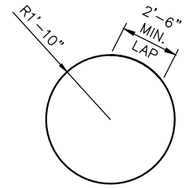

P407

BAR BENDING DIAGRAMS

NO.	DATE	BY	CHECK	DESIGN	REVISION / SUBMITTAL

DESIGNED BY: SMY | CHECKED BY: MTC
DRAWN BY: CAD | CHECKED BY: LKZ

AECOM Kimley»Horn

90% SUBMISSION - 01/22/16

METROPOLITAN COUNCIL

SOUTHWEST Green Line LRT Extension

CIVIL - VOLUME 4F
CEDAR LAKE TRAIL - BELTLINE STATION BRIDGE R0692 (TRL)
PIERS 1, 4-6, 9-11 REINFORCEMENT 2

DISCIPLINE: STRUCTURES

SHEET NAME: CBRR0692-BRG-TRN-004

SHEET 22 OF 60

Jan, 13 2016 03:51 pm V:\3400_ADC\CAD\SEGMENT E2\PLAN SHEETS\STRUCTURES\CLRT-TRL\CBRR0692-BRG-TRN-004.dwg By: Caitlyn.Deutsch

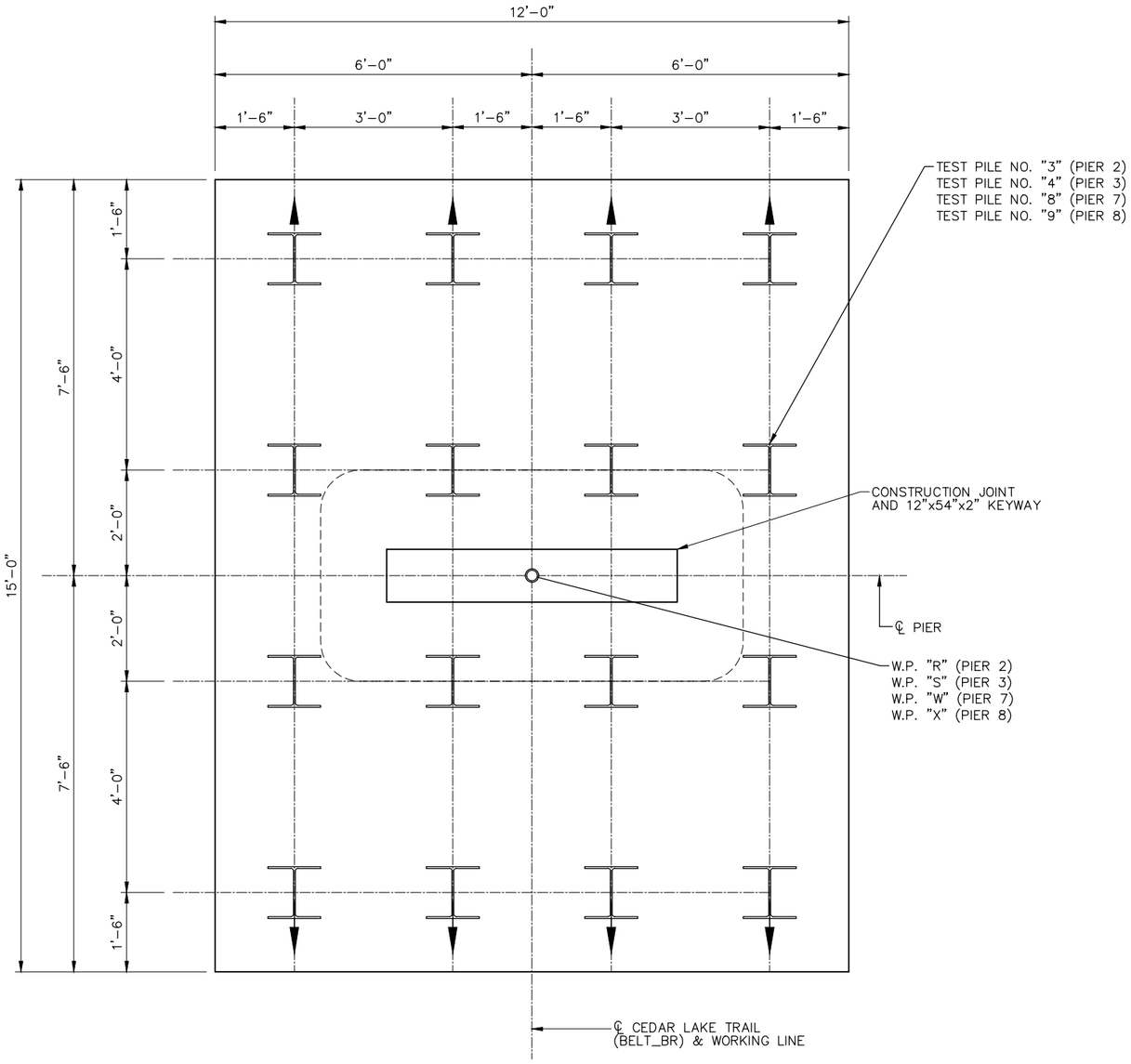

FOOTING PLAN

PIERS 2, 3, 7 & 8 COMPUTED PILE LOAD - TONS/PILE	
FACTORED DEAD LOAD + EARTH PRESSURE	96
FACTORED LIVE LOAD	30
*FACTORED DESIGN LOAD	126
* BASED ON STRENGTH V LOAD COMBINATION.	

PIERS 2, 3, 7 & 8 REQUIRED NOMINAL PILE BEARING RESISTANCE FOR H-PILES Rn - TONS/PILE		
FIELD CONTROL METHOD	φdyn	*Rn
MN/DOT PILE FORMULA 2012 (MPF12) $R_n = 20\sqrt{\frac{W' \times H}{1000}} x log\left(\frac{10}{S}\right)$	0.60	151
PDA	0.65	140
* Rn = (FACTORED DESIGN LOAD) / φdyn		

GENERAL PILE NOTES:

1 HP 12 X 53 TEST PILES 75 FT. LONG
15 HP 12 X 53 PILES EST. LENGTH 65 FT.
16 HP 12 X 53 PILES REQ'D FOR EACH PIER

PILE SPACING SHOWN IS AT BOTTOM OF FOOTING.

PILES MARKED THUS ⊥ TO BE BATTERED 3" PER FOOT IN DIRECTION SHOWN.

PILES ARE TO BE HP 12 X 53 WITH PILE TIP PROTECTION.

NO.	DATE	BY	CHECK	DESIGN	REVISION / SUBMITTAL

DESIGNED BY: SMY | CHECKED BY: MTC
DRAWN BY: CAD | CHECKED BY: LKZ

AECOM Kimley»Horn

90% SUBMISSION - 01/22/16

METROPOLITAN COUNCIL

SOUTHWEST Green Line LRT Extension

CIVIL - VOLUME 4F
CEDAR LAKE TRAIL - BELTLINE STATION
BRIDGE R0692 (TRL)
PIERS 2, 3, 7 AND 8 DETAILS 1

DISCIPLINE: STRUCTURES
SHEET NAME: CBRR0692-BRG-PIR-003

SHEET 23 OF 60

Jan 13 2016 03:52 pm V:\3400_ADC\CAD\SEGMENT E2\PLAN SHEETS\STRUCTURES\CLRT-TRL\CBRR0692-BRG-PIR-003.dwg By: Caitlyn.Deutsch

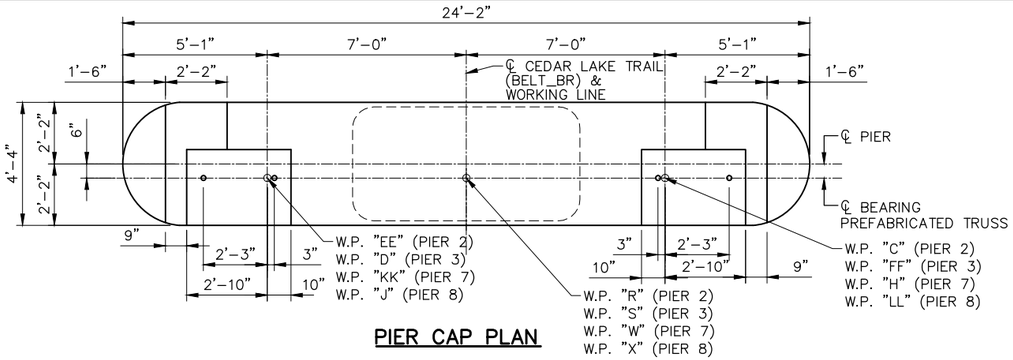

PIER CAP PLAN

PIER ELEVATIONS (1)				
	EL. A	EL. B	EL. C	EL. D
PIER 2	878.65	884.65	899.15	907.88
PIER 3	877.53	883.53	901.86	910.59
PIER 7	876.68	882.68	906.93	915.66
PIER 8	875.10	881.10	902.35	911.08

NOTES:

(1) BEARING PEDESTAL ELEVATIONS ARE ESTIMATED ONLY. CONTRACTOR SHALL VERIFY ELEVATIONS BASED ON PREFABRICATED TRUSS GEOMETRY AND TRUSS BEARING ASSEMBLIES.

(2) PIER CAP TO BE POURED MONOLITHICALLY WITH SUPERSTRUCTURE AND FILLET.

℄ BEARING FOR PREFABRICATED TRUSS SHALL BE VERIFIED BY CONTRACTOR.

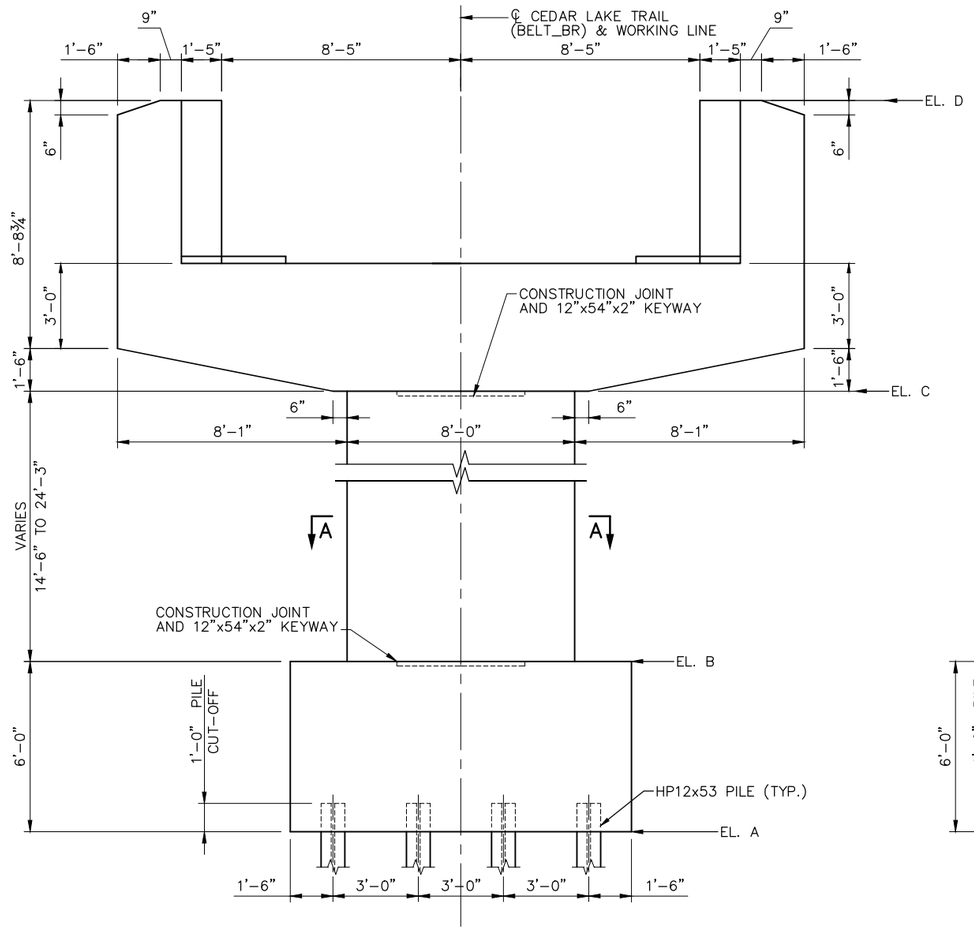

ELEVATION

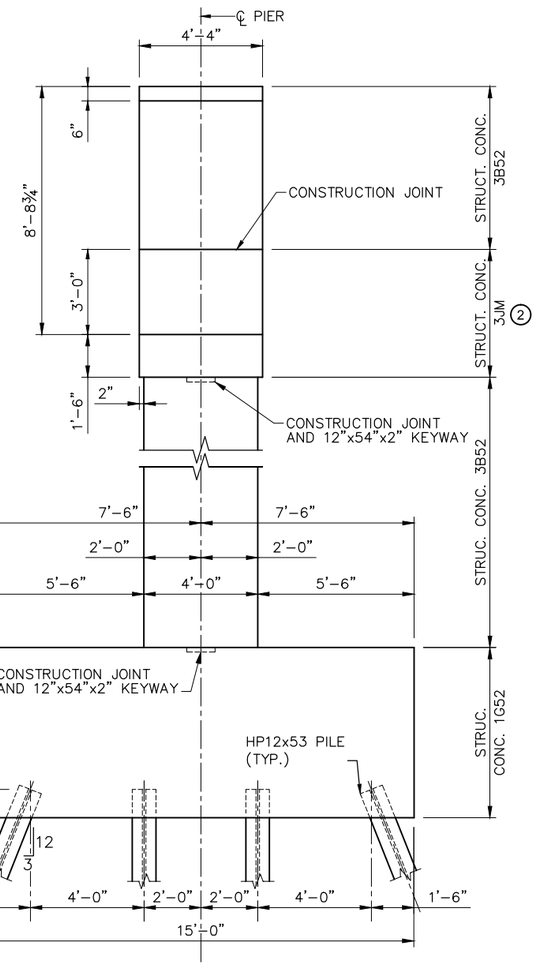

END VIEW

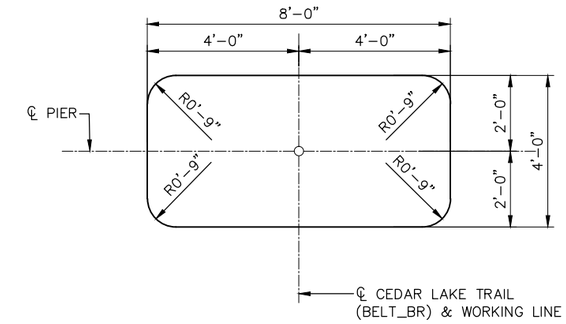

SECTION A–A

NO.	DATE	BY	CHECK	DESIGN	REVISION / SUBMITTAL

DESIGNED BY: SMY | CHECKED BY: MTC
DRAWN BY: CAD | CHECKED BY: LKZ

AECOM Kimley»Horn

90% SUBMISSION - 01/22/16

METROPOLITAN COUNCIL

SOUTHWEST Green Line LRT Extension

CIVIL - VOLUME 4F
CEDAR LAKE TRAIL - BELTLINE STATION
BRIDGE R0692 (TRL)
PIERS 2, 3, 7 AND 8 DETAILS 2

DISCIPLINE: STRUCTURES
SHEET NAME: CBRR0692-BRG-PIR-004

SHEET 24 OF 60

Jan, 13 2016 03:52 pm V:\3400_ADC\CAD\SEGMENT E2\PLAN SHEETS\STRUCTURES\CLRT-TRL\CBRR0692-BRG-PIR-004.dwg By: Caitlyn.Deutsch

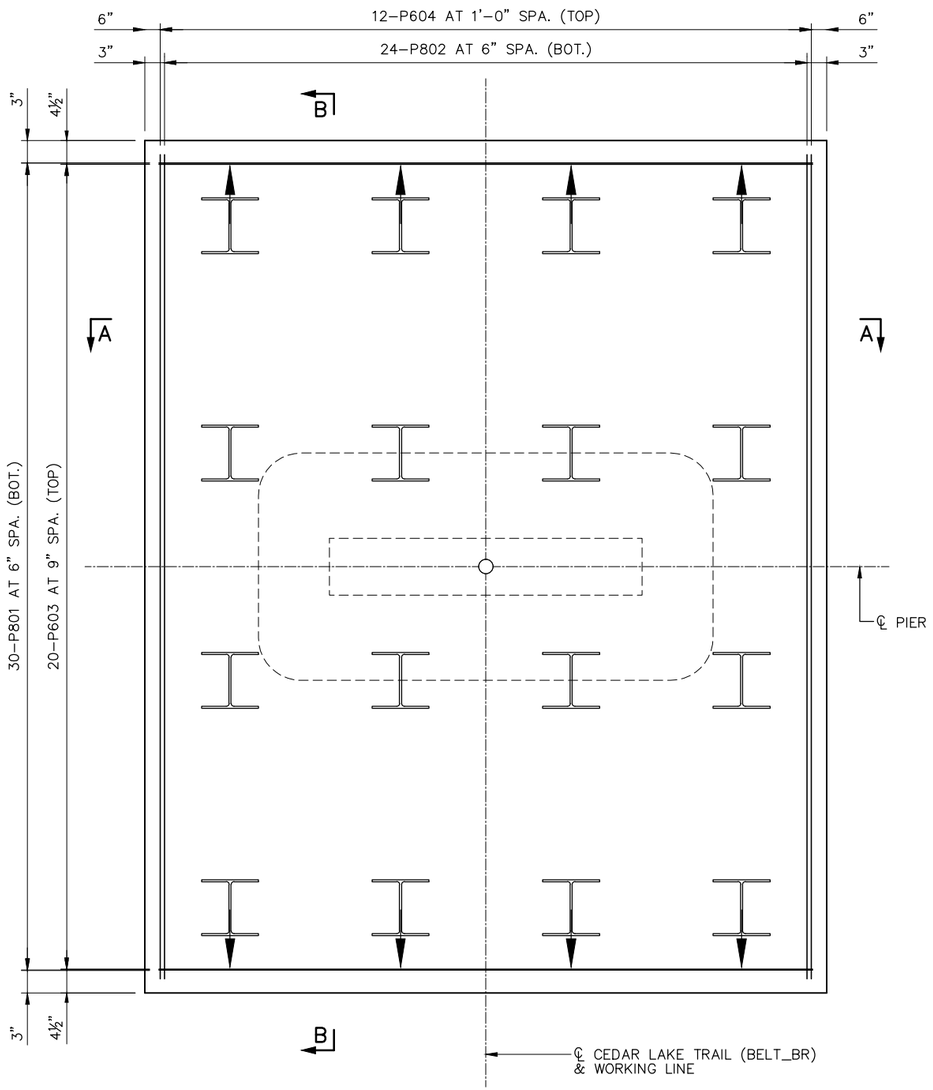

FOOTING REINFORCEMENT

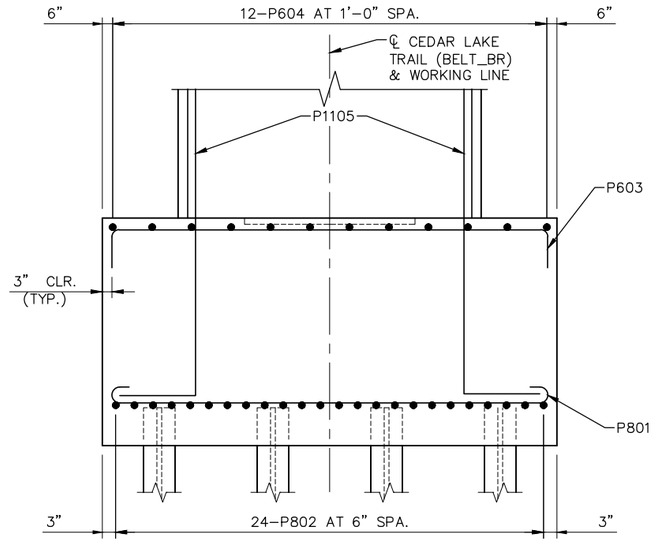

SECTION A–A

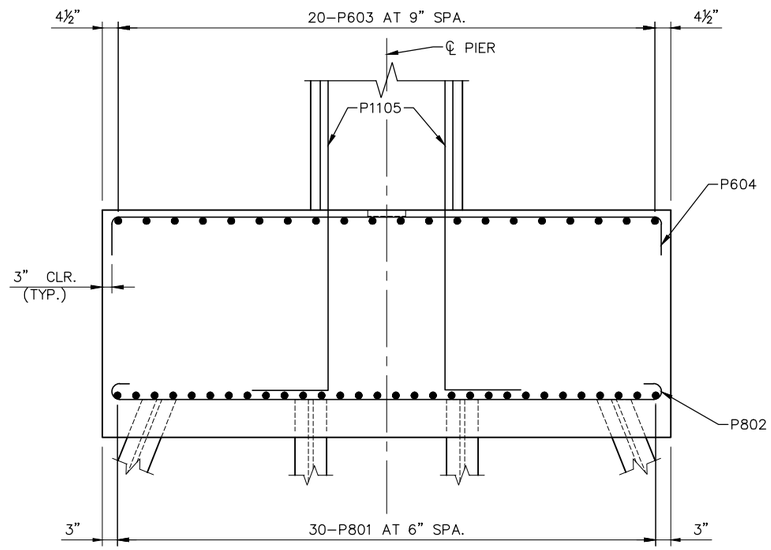

SECTION B–B

NOTES:

F.F. DENOTES FRONT FACE.
B.F. DENOTES BACK FACE.
E.F. DENOTES EACH FACE.

NO.	DATE	BY	CHECK	DESIGN	REVISION / SUBMITTAL

DESIGNED BY: SMY | CHECKED BY: MTC
DRAWN BY: CAD | CHECKED BY: LKZ

AECOM Kimley»Horn

90% SUBMISSION - 01/22/16

METROPOLITAN COUNCIL

SOUTHWEST Green Line LRT Extension

CIVIL - VOLUME 4F
CEDAR LAKE TRAIL - BELTLINE STATION BRIDGE R0692 (TRL)
PIERS 2, 3, 7 AND 8 REINFORCEMENT 1

DISCIPLINE: STRUCTURES
SHEET NAME: CBRR0692-BRG-PIR-005

SHEET 25 OF 60

Jan, 13 2016 03:53 pm V:\3400_ADC\CAD\SEGMENT E2\PLAN SHEETS\STRUCTURES\CLRT-TRL\CBRR0692-BRG-PIR-005.dwg By: Caitlyn.Deutsch

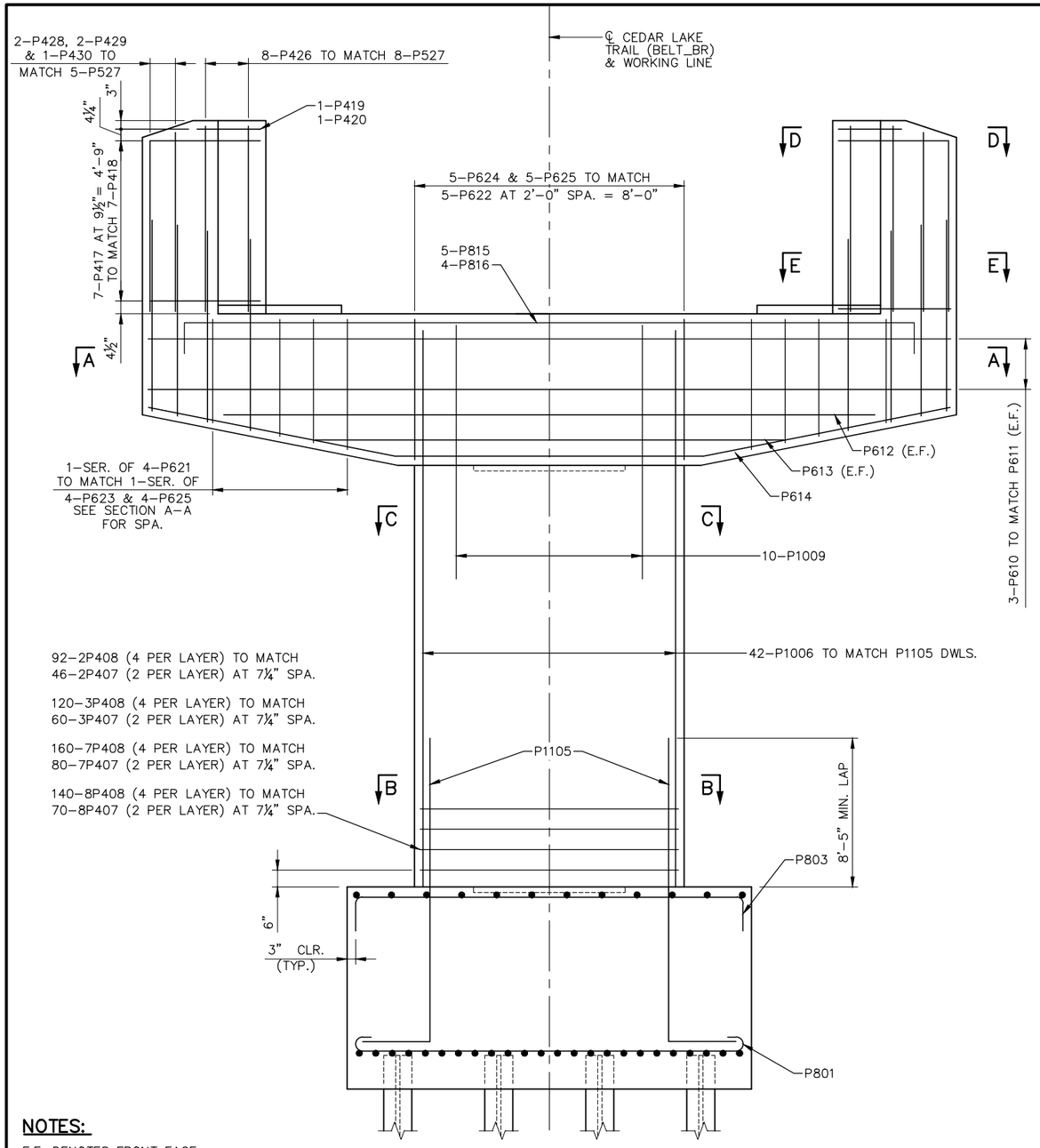

92–2P408 (4 PER LAYER) TO MATCH
46–2P407 (2 PER LAYER) AT 7¼" SPA.

120–3P408 (4 PER LAYER) TO MATCH
60–3P407 (2 PER LAYER) AT 7¼" SPA.

160–7P408 (4 PER LAYER) TO MATCH
80–7P407 (2 PER LAYER) AT 7¼" SPA.

140–8P408 (4 PER LAYER) TO MATCH
70–8P407 (2 PER LAYER) AT 7¼" SPA.

NOTES:

F.F. DENOTES FRONT FACE.
B.F. DENOTES BACK FACE.
E.F. DENOTES EACH FACE.

PIER CAP TO BE POURED MONOLITHICALLY WITH SUPERSTRUCTURE AND FILLET.

ELEVATION

BAR SPACING OR CALL–OUTS NOT SHOWN ARE SYMMETRIC ABOUT ℄

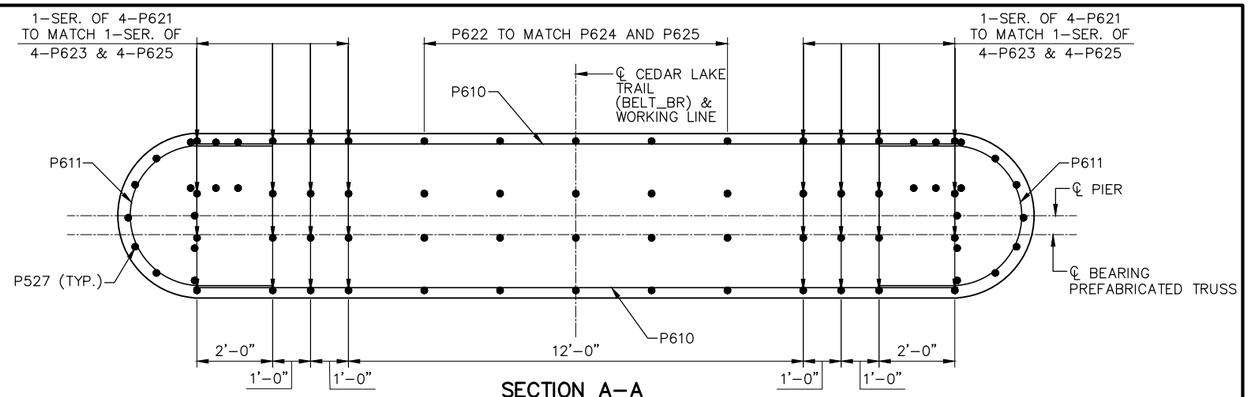

SECTION A–A

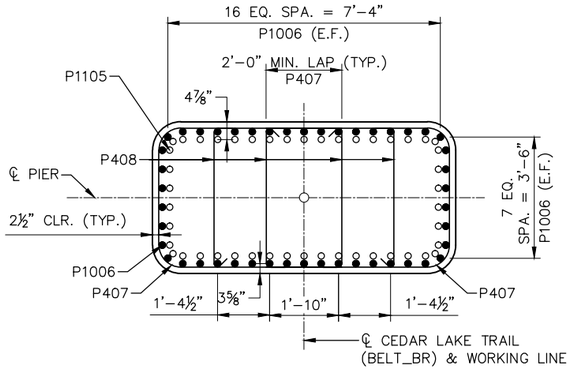

SECTION B–B

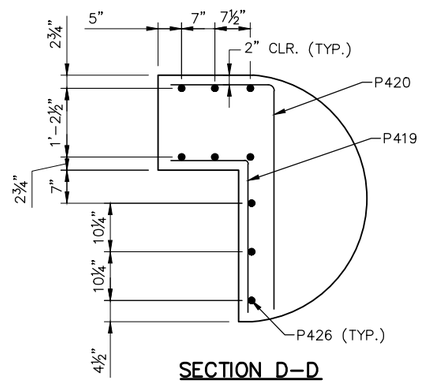

SECTION D–D

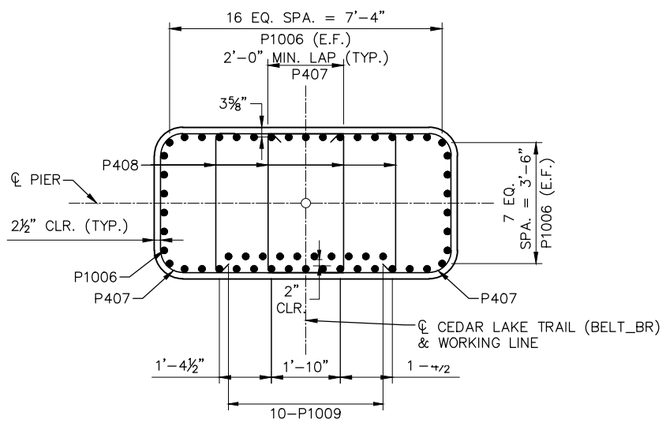

SECTION C–C

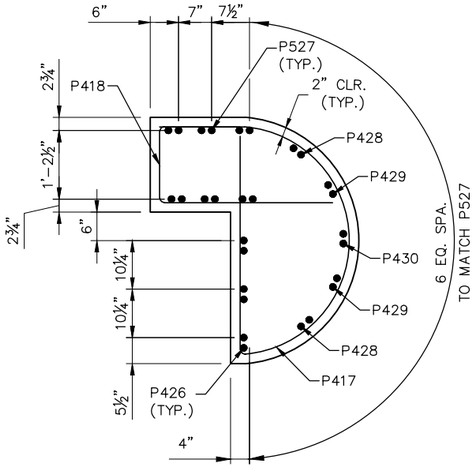

SECTION E–E

NO.	DATE	BY	CHECK	DESIGN	REVISION / SUBMITTAL

DESIGNED BY: SMY | CHECKED BY: MTC
DRAWN BY: CAD | CHECKED BY: LKZ

AECOM Kimley»Horn

90% SUBMISSION - 01/22/16

METROPOLITAN COUNCIL

SOUTHWEST Green Line LRT Extension

CIVIL - VOLUME 4F
CEDAR LAKE TRAIL - BELTLINE STATION
BRIDGE R0692 (TRL)
PIERS 2, 3, 7 AND 8 REINFORCEMENT 2

DISCIPLINE: STRUCTURES
SHEET NAME: CBRR0692-BRG-PIR-006

SHEET 26 OF 60

Jan, 13 2016 03:53 pm V:\3400_ADC\CAD\SEGMENT E2\PLAN SHEETS\STRUCTURES\CLRT-TRL\CBRR0692-BRG-PIR-006.dwg By: Caitlyn.Deutsch

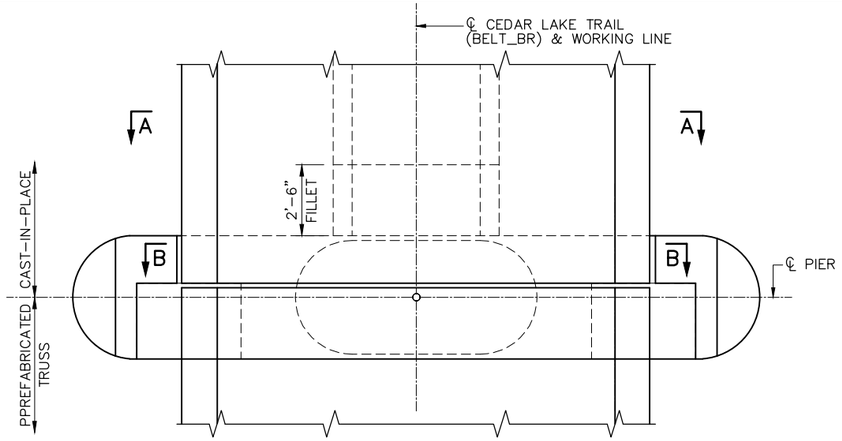

PIER 2 – PLAN VIEW
PIERS 3, 7 AND 8 SIMILAR

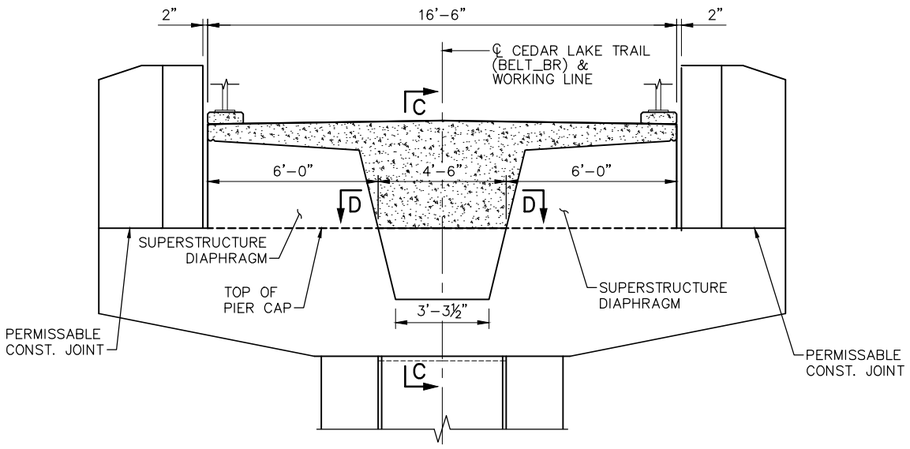

SECTION A–A

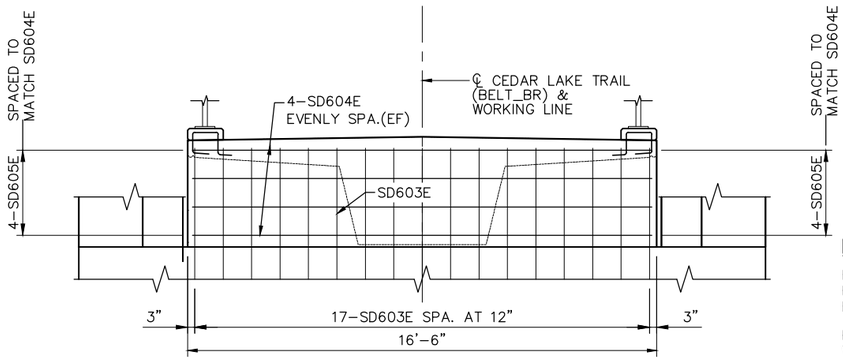

SECTION B–B
SUPERSTRUCTURE DIAPHRAGM – ONLY DIAPHRAGM REINFORCEMENT SHOWN FOR CLARITY

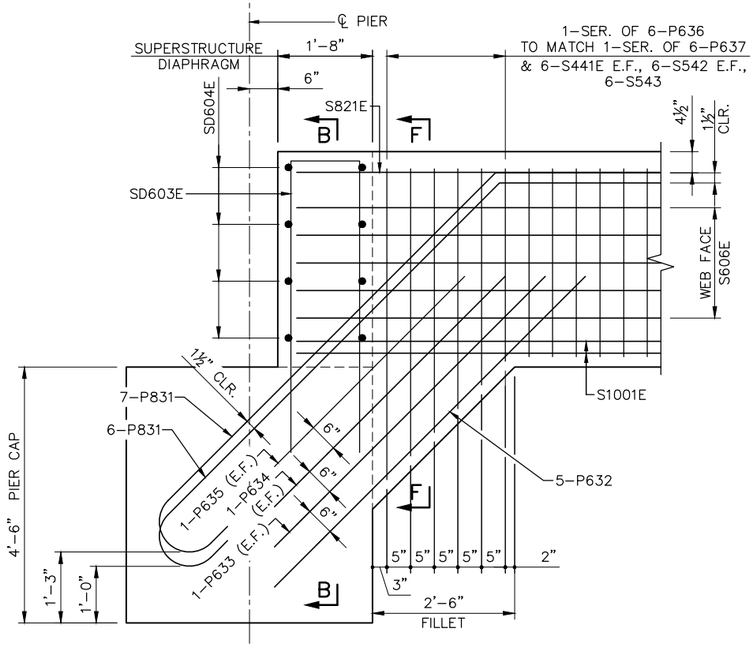

SECTION C–C
PIER CAP REINFORCEMENT NOT SHOWN FOR CLARITY

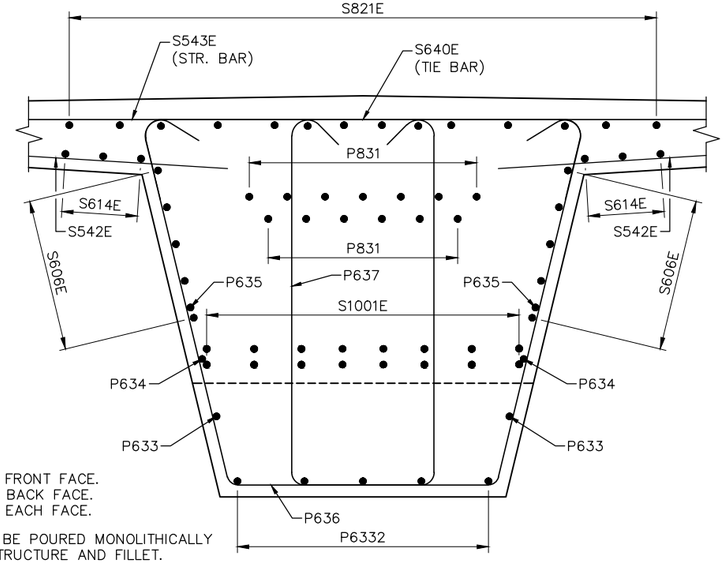

SECTION F–F

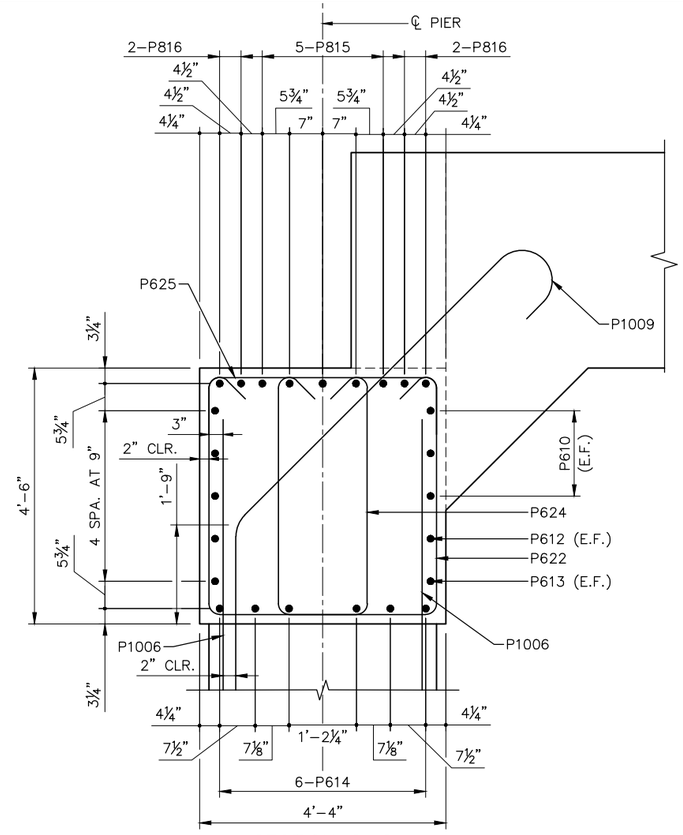

SECTION C–C
ONLY PIER CAP REINFORCEMENT SHOWN

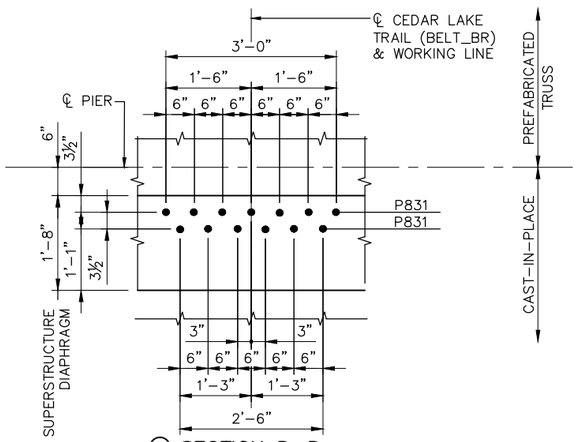

① SECTION D–D
MAIN FLEXURAL DOWEL BAR PLACEMENT

NOTES:
F.F. DENOTES FRONT FACE.
B.F. DENOTES BACK FACE.
E.F. DENOTES EACH FACE.

PIER CAP TO BE POURED MONOLITHICALLY WITH SUPERSTRUCTURE AND FILLET.

① DIMENSIONS GIVEN ARE RELATIVE TO TOP OF THE PIER CAP

NO.	DATE	BY	CHECK	DESIGN	REVISION / SUBMITTAL

DESIGNED BY: SMY | CHECKED BY: MTC
DRAWN BY: CAD | CHECKED BY: LKZ

AECOM Kimley»Horn

90% SUBMISSION - 01/22/16

METROPOLITAN COUNCIL

SOUTHWEST Green Line LRT Extension

CIVIL - VOLUME 4F
CEDAR LAKE TRAIL - BELTLINE STATION
BRIDGE R0692 (TRL)
PIERS 2, 3, 7 AND 8 FILLET

DISCIPLINE: STRUCTURES
SHEET NAME: CBRR0692-BRG-PIR-007

SHEET 27 OF 60

Jan, 13 2016 03:54 pm V:\3400_ADC\CAD\SEGMENT E2\PLAN SHEETS\STRUCTURES\CLRT-TRL\CBRR0692-BRG-PIR-007.dwg By: Caitlyn.Deutsch

BILL OF REINFORCEMENT FOR PIER 2

BAR	NO.	LENGTH	SHAPE	LOCATION
2P801	32	13'-9"	BENT	FOOTING TRANSVERSE BOT.
2P802	32	16'-9"	BENT	FOOTING LONGITUDINAL BOT.
2P603	21	13'-6"	BENT	FOOTING TRANSVERSE, TOP
2P604	12	16'-6"	BENT	FOOTING LONGITUDINAL, TOP
2P1105	46	15'-0"	BENT	FOOTING DOWEL BAR
2P1006	46	17'-11"	STR.	COLUMN LONGITUDINAL
2P407	46	14'-0"	BENT	COLUMN TIE
2P408	92	5'-4"	BENT	COLUMN TIE
2P1009	10	16'-11"	BENT	COLUMN LONGITUDINAL
2P610	6	19'-10"	STR.	CAP LONGITUDINAL
2P611	6	12'-8"	BENT	CAP END TIE
2P612	2	19'-4"	STR.	CAP LONGITUDINAL
2P613	2	13'-11"	STR.	CAP LONGITUDINAL
2P614	6	19'-8"	BENT	CAP LONGITUDINAL
2P815	5	23'-2"	BENT	CAP LONGITUDINAL
2P816	4	21'-8"	BENT	CAP LONGITUDINAL
2P417	14	11'-5"	BENT	MASKWALL TIE
2P418	14	5'-10"	BENT	MASKWALL TIE
2P419	2	4'-0"	BENT	MASKWALL TIE
2P420	2	5'-9"	BENT	MASKWALL TIE
2P621	2 SERIES OF 4	11'-4"TO 13'-0"	BENT	CAP STIRRUP
2P622	5	13'-8"	BENT	CAP STIRRUP
2P623	2 SERIES OF 4	8'-11"TO 10'-7"	BENT	CAP STIRRUP
2P624	5	11'-3"	BENT	CAP STIRRUP
2P625	13	6'-0"	BENT	CAP STIRRUP TIE
2P426	16	5'-6"	STR.	MASKWALL VERTICAL
2P527	28	5'-8"	STR.	MASKWALL DOWELL
2P428	4	5'-4"	STR.	MASKWALL VERTICAL
2P429	4	5'-0"	STR.	MASKWALL VERTICAL
2P430	2	4'-8"	STR.	MASKWALL VERTICAL
2P831	13	17'-0"	BENT	FILLET
2P632	5	8'-0"	STR.	FILLET
2P633	2	7'-0"	STR.	FILLET
2P634	2	5'-9"	STR.	FILLET
2P635	2	4'-9"	STR.	FILLET
2P636	1 SERIES OF 6	12'-8"TO 15'-11"	BENT	FILLET STIRRUP
2P637	1 SERIES OF 6	10'-1"TO 14'-3"	BENT	FILLET STIRRUP

BILL OF REINFORCEMENT FOR PIER 3

BAR	NO.	LENGTH	SHAPE	LOCATION
3P801	32	13'-9"	BENT	FOOTING TRANSVERSE BOT.
3P802	32	16'-9"	BENT	FOOTING LONGITUDINAL BOT.
3P603	21	13'-6"	BENT	FOOTING TRANSVERSE, TOP
3P604	12	16'-6"	BENT	FOOTING LONGITUDINAL, TOP
3P1105	46	15'-0"	BENT	FOOTING DOWEL BAR
3P1006	46	21'-9"	STR.	COLUMN LONGITUDINAL
3P407	60	14'-0"	BENT	COLUMN TIE
3P408	120	5'-4"	BENT	COLUMN TIE
3P1009	10	16'-11"	BENT	COLUMN LONGITUDINAL
3P610	6	19'-10"	STR.	CAP LONGITUDINAL
3P611	6	12'-8"	BENT	CAP END TIE
3P612	2	19'-4"	STR.	CAP LONGITUDINAL
3P613	2	13'-11"	STR.	CAP LONGITUDINAL
3P614	6	19'-8"	BENT	CAP LONGITUDINAL
3P815	5	23'-2"	BENT	CAP LONGITUDINAL
3P816	4	21'-8"	BENT	CAP LONGITUDINAL
3P417	14	11'-5"	BENT	MASKWALL TIE
3P418	14	5'-10"	BENT	MASKWALL TIE
3P419	2	4'-0"	BENT	MASKWALL TIE
3P420	2	5'-9"	BENT	MASKWALL TIE
3P621	2 SERIES OF 4	11'-4"TO 13'-0"	BENT	CAP STIRRUP
3P622	5	13'-8"	BENT	CAP STIRRUP
3P623	2 SERIES OF 4	8'-11"TO 10'-7"	BENT	CAP STIRRUP
3P624	5	11'-3"	BENT	CAP STIRRUP
3P625	13	6'-0"	BENT	CAP STIRRUP TIE
3P426	16	5'-6"	STR.	MASKWALL VERTICAL
3P527	28	5'-8"	STR.	MASKWALL DOWELL
3P428	4	5'-4"	STR.	MASKWALL VERTICAL
3P429	4	5'-0"	STR.	MASKWALL VERTICAL
3P430	2	4'-8"	STR.	MASKWALL VERTICAL
3P831	13	17'-0"	BENT	FILLET
3P632	5	8'-0"	STR.	FILLET
3P633	2	7'-0"	STR.	FILLET
3P634	2	5'-9"	STR.	FILLET
3P635	2	4'-9"	STR.	FILLET
3P636	1 SERIES OF 6	12'-8"TO 15'-11"	BENT	FILLET STIRRUP
3P637	1 SERIES OF 6	10'-1"TO 14'-3"	BENT	FILLET STIRRUP

NOTES:

BENT BAR DIMENSIONS GIVEN ARE OUT-TO-OUT. ACTUAL BAR LENGTHS SHALL BE DETERMINED BASED ON THE DETAIL DIMENSIONS SHOWN IN THE BAR BENDING DIAGRAMS. TOTAL BAR LENGTHS ARE SHOWN FOR USE IN COMPUTING REINFORCEMENT BAR WEIGHTS FOR PAYMENT ONLY.

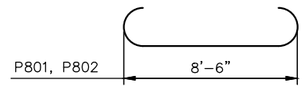

P801, P802

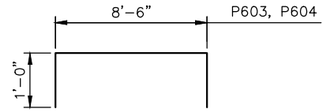

P603, P604

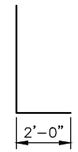

P1105

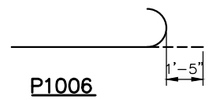

P1006

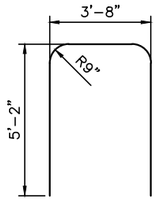

P407

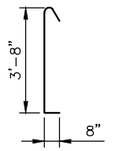

P408

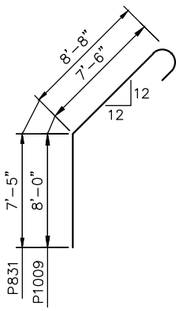

P1009, P831

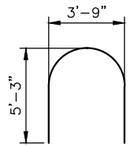

P611

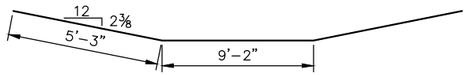

P614

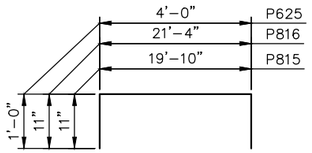

P815, P816, P625

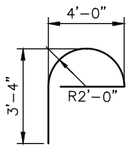

P417

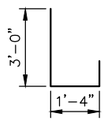

P418

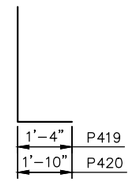

P419, P420

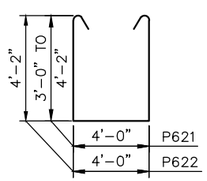

P621, P622

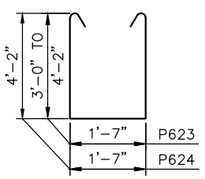

P623, P624

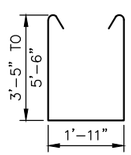

P637

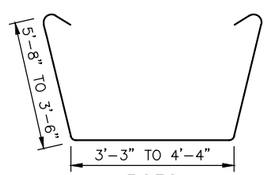

P636

BAR BENDING DIAGRAMS

NO.	DATE	BY	CHECK	DESIGN	REVISION / SUBMITTAL

DESIGNED BY: SMY | CHECKED BY: MTC
DRAWN BY: CAD | CHECKED BY: LKZ

AECOM Kimley»Horn

90% SUBMISSION - 01/22/16

METROPOLITAN COUNCIL

SOUTHWEST Green Line LRT Extension

CIVIL - VOLUME 4F
CEDAR LAKE TRAIL - BELTLINE STATION
BRIDGE R0692 (TRL)
PIERS 2, 3, 7 AND 8 REINFORCEMENT 3

DISCIPLINE: STRUCTURES
SHEET NAME: CBRR0692-BRG-TRN-005

SHEET 28 OF 60

Jan, 13 2016 04:40 pm V:\3400_ADC\CAD\SEGMENT E2\PLAN SHEETS\STRUCTURES\CLRT-TRL\CBRR0692-BRG-TRN-005.dwg By: Caitlyn.Deutsch

BILL OF REINFORCEMENT FOR PIER 7

BAR	NO.	LENGTH	SHAPE	LOCATION
7P801	32	13'-9"	BENT	FOOTING TRANSVERSE BOT.
7P802	32	16'-9"	BENT	FOOTING LONGITUDINAL BOT.
7P603	21	13'-6"	BENT	FOOTING TRANSVERSE, TOP
7P604	12	16'-6"	BENT	FOOTING LONGITUDINAL, TOP
7P1105	46	15'-0"	BENT	FOOTING DOWEL BAR
7P1006	46	27'-8"	STR.	COLUMN LONGITUDINAL
7P407	80	14'-0"	BENT	COLUMN TIE
7P408	160	5'-4"	BENT	COLUMN TIE
7P1009	10	16'-11"	BENT	COLUMN LONGITUDINAL
7P610	6	19'-10"	STR.	CAP LONGITUDINAL
7P611	6	12'-8"	BENT	CAP END TIE
7P612	2	19'-4"	STR.	CAP LONGITUDINAL
7P613	2	13'-11"	STR.	CAP LONGITUDINAL
7P614	6	19'-8"	BENT	CAP LONGITUDINAL
7P815	5	23'-2"	BENT	CAP LONGITUDINAL
7P816	4	21'-8"	BENT	CAP LONGITUDINAL
7P417	14	11'-5"	BENT	MASKWALL TIE
7P418	14	5'-10"	BENT	MASKWALL TIE
7P419	2	4'-0"	BENT	MASKWALL TIE
7P420	2	5'-9"	BENT	MASKWALL TIE
7P621	2 SERIES OF 4	11'-4"TO 13'-0"	BENT	CAP STIRRUP
7P622	5	13'-8"	BENT	CAP STIRRUP
7P623	2 SERIES OF 4	8'-11"TO 10'-7"	BENT	CAP STIRRUP
7P624	5	11'-3"	BENT	CAP STIRRUP
7P625	13	6'-0"	BENT	CAP STIRRUP TIE
7P426	16	5'-6"	STR.	MASKWALL VERTICAL
7P527	28	5'-8"	STR.	MASKWALL DOWELL
7P428	4	5'-4"	STR.	MASKWALL VERTICAL
7P429	4	5'-0"	STR.	MASKWALL VERTICAL
7P430	2	4'-8"	STR.	MASKWALL VERTICAL
7P831	13	17'-0"	BENT	FILLET
7P632	5	8'-0"	STR.	FILLET
7P633	2	7'-0"	STR.	FILLET
7P634	2	5'-9"	STR.	FILLET
7P635	2	4'-9"	STR.	FILLET
7P636	1 SERIES OF 6	12'-8"TO 15'-11"	BENT	FILLET STIRRUP
7P637	1 SERIES OF 6	10'-1"TO 14'-3"	BENT	FILLET STIRRUP

BILL OF REINFORCEMENT FOR PIER 8

BAR	NO.	LENGTH	SHAPE	LOCATION
8P801	32	13'-9"	BENT	FOOTING TRANSVERSE BOT.
8P802	32	16'-9"	BENT	FOOTING LONGITUDINAL BOT.
8P603	21	13'-6"	BENT	FOOTING TRANSVERSE, TOP
8P604	12	16'-6"	BENT	FOOTING LONGITUDINAL, TOP
8P1105	46	15'-0"	BENT	FOOTING DOWEL BAR
8P1006	46	24'-8"	STR.	COLUMN LONGITUDINAL
8P407	70	14'-0"	BENT	COLUMN TIE
8P408	140	5'-4"	BENT	COLUMN TIE
8P1009	10	16'-11"	BENT	COLUMN LONGITUDINAL
8P610	6	19'-10"	STR.	CAP LONGITUDINAL
8P611	6	12'-8"	BENT	CAP END TIE
8P612	2	19'-4"	STR.	CAP LONGITUDINAL
8P613	2	13'-11"	STR.	CAP LONGITUDINAL
8P614	6	19'-8"	BENT	CAP LONGITUDINAL
8P815	5	23'-2"	BENT	CAP LONGITUDINAL
8P816	4	21'-8"	BENT	CAP LONGITUDINAL
8P417	14	11'-5"	BENT	MASKWALL TIE
8P418	14	5'-10"	BENT	MASKWALL TIE
8P419	2	4'-0"	BENT	MASKWALL TIE
8P420	2	5'-9"	BENT	MASKWALL TIE
8P621	2 SERIES OF 4	11'-4"TO 13'-0"	BENT	CAP STIRRUP
8P622	5	13'-8"	BENT	CAP STIRRUP
8P623	2 SERIES OF 4	8'-11"TO 10'-7"	BENT	CAP STIRRUP
8P624	5	11'-3"	BENT	CAP STIRRUP
8P625	13	6'-0"	BENT	CAP STIRRUP TIE
8P426	16	5'-6"	STR.	MASKWALL VERTICAL
8P527	28	5'-8"	STR.	MASKWALL DOWELL
8P428	4	5'-4"	STR.	MASKWALL VERTICAL
8P429	4	5'-0"	STR.	MASKWALL VERTICAL
8P430	2	4'-8"	STR.	MASKWALL VERTICAL
8P831	13	17'-0"	BENT	FILLET
8P632	5	8'-0"	STR.	FILLET
8P633	2	7'-0"	STR.	FILLET
8P634	2	5'-9"	STR.	FILLET
8P635	2	4'-9"	STR.	FILLET
8P636	1 SERIES OF 6	12'-8"TO 15'-11"	BENT	FILLET STIRRUP
8P637	1 SERIES OF 6	10'-1"TO 14'-3"	BENT	FILLET STIRRUP

NOTES:

BENT BAR DIMENSIONS GIVEN ARE OUT–TO–OUT. ACTUAL BAR LENGTHS SHALL BE DETERMINED BASED ON THE DETAIL DIMENSIONS SHOWN IN THE BAR BENDING DIAGRAMS. TOTAL BAR LENGTHS ARE SHOWN FOR USE IN COMPUTING REINFORCEMENT BAR WEIGHTS FOR PAYMENT ONLY.

BAR BENDING DIAGRAMS

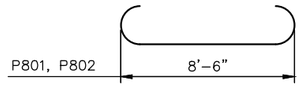

P801, P802

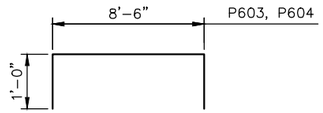

P603, P604



P1105

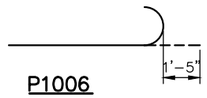

P1006

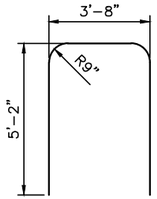

P407

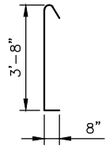

P408

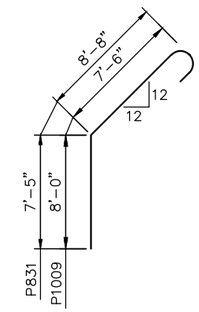

P1009, P831

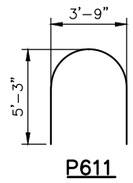

P611

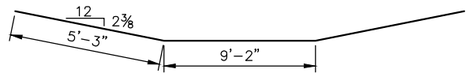

P614

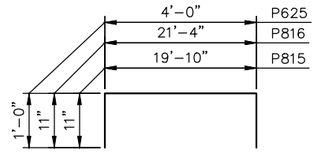

P815, P816, P625

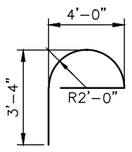

P417

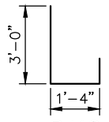

P418

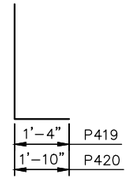

P419, P420

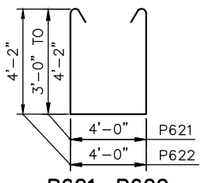

P621, P622

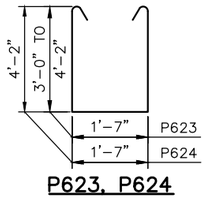

P623, P624

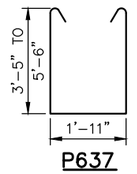

P637

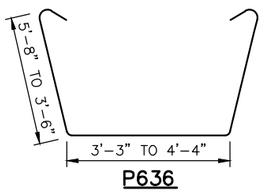

P636

NO.	DATE	BY	CHECK	DESIGN	REVISION / SUBMITTAL

DESIGNED BY: SMY | CHECKED BY: MTC
DRAWN BY: CAD | CHECKED BY: LKZ

AECOM Kimley»Horn

90% SUBMISSION - 01/22/16

METROPOLITAN COUNCIL

SOUTHWEST Green Line LRT Extension

CIVIL - VOLUME 4F
CEDAR LAKE TRAIL - BELTLINE STATION BRIDGE R0692 (TRL)
PIERS 2, 3, 7 AND 8 REINFORCEMENT 4

DISCIPLINE: STRUCTURES
SHEET NAME: CBRR0692-BRG-TRN-006

SHEET 29 OF 60

Jan, 13 2016 04:40 pm V:\3400_ADC\CAD\SEGMENT E2\PLAN SHEETS\STRUCTURES\CLRT-TRL\CBRR0692-BRG-TRN-006.dwg By: Caitlyn.Deutsch

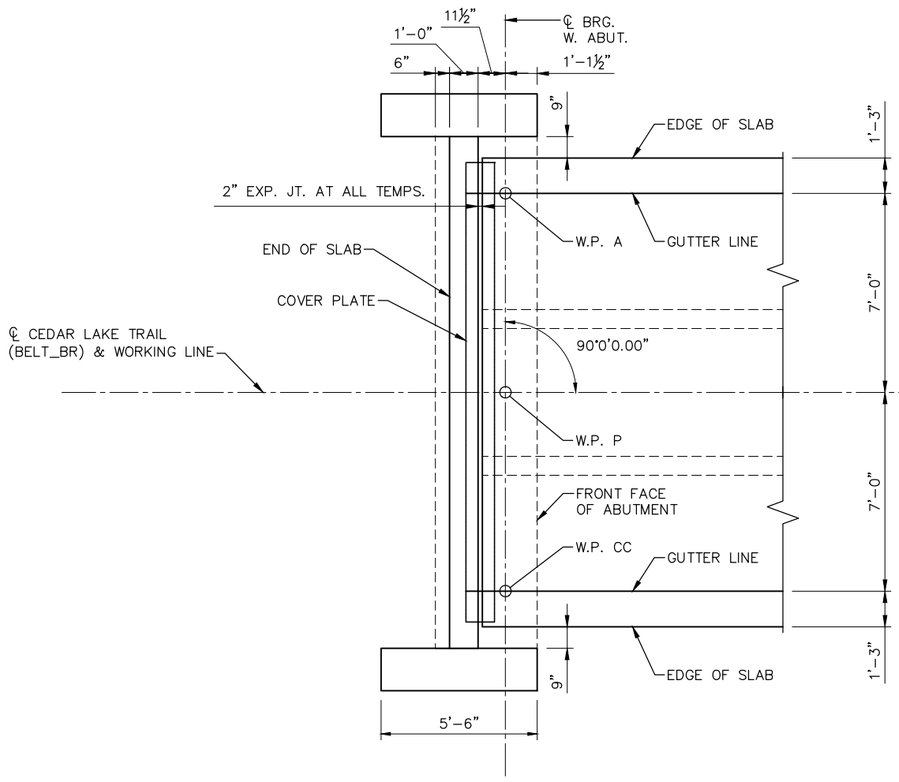

WEST ABUTMENT DETAIL
(EAST ABUTMENT SIMILAR)

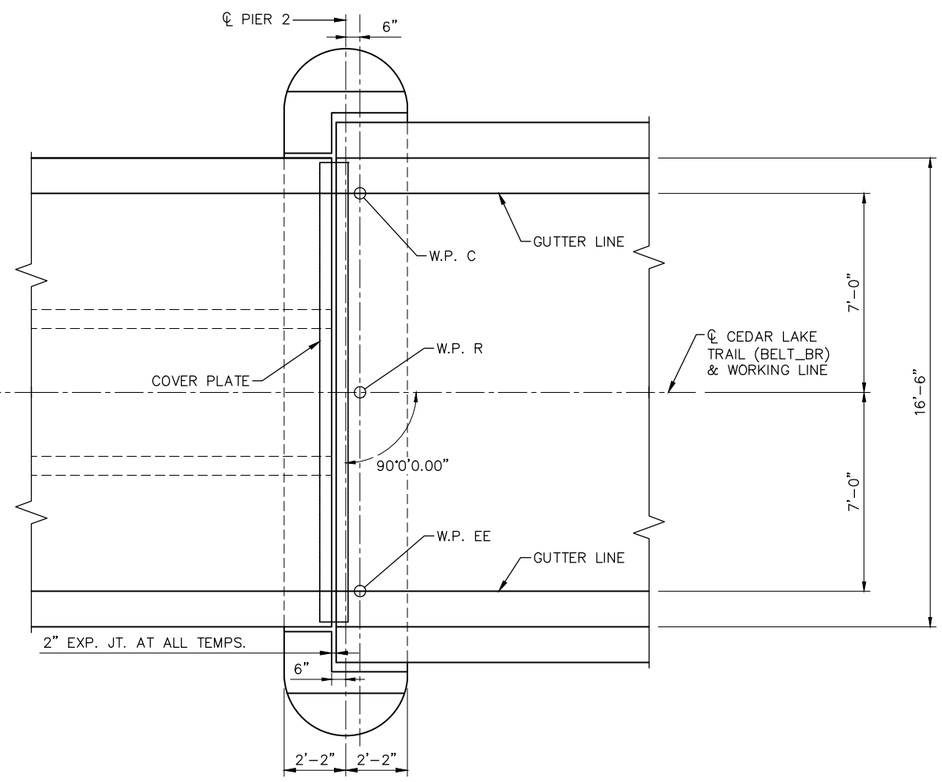

PIER 2 DETAIL
(PIER 3, PIER 7 & PIER 8 SIMILAR)

NO.	DATE	BY	CHECK	DESIGN	REVISION / SUBMITTAL

DESIGNED BY: CAD | CHECKED BY: MTC
DRAWN BY: AMC | CHECKED BY: LKZ

AECOM Kimley»Horn

90% SUBMISSION - 01/22/16

METROPOLITAN COUNCIL

SOUTHWEST Green Line LRT Extension

CIVIL - VOLUME 4F
CEDAR LAKE TRAIL - BELTLINE STATION
BRIDGE R0692 (TRL)
CORNER DETAILS

DISCIPLINE: STRUCTURES

SHEET NAME: CBRR0692-BRG-SUP-001

SHEET 30 OF 60

Jan, 13 2016 03:56 pm V:\3400_ADC\CAD\SEGMENT E2\PLAN SHEETS\STRUCTURES\CLRT-TRL\CBRR0692-BRG-SUP-001.dwg By: Caitlyn.Deutsch

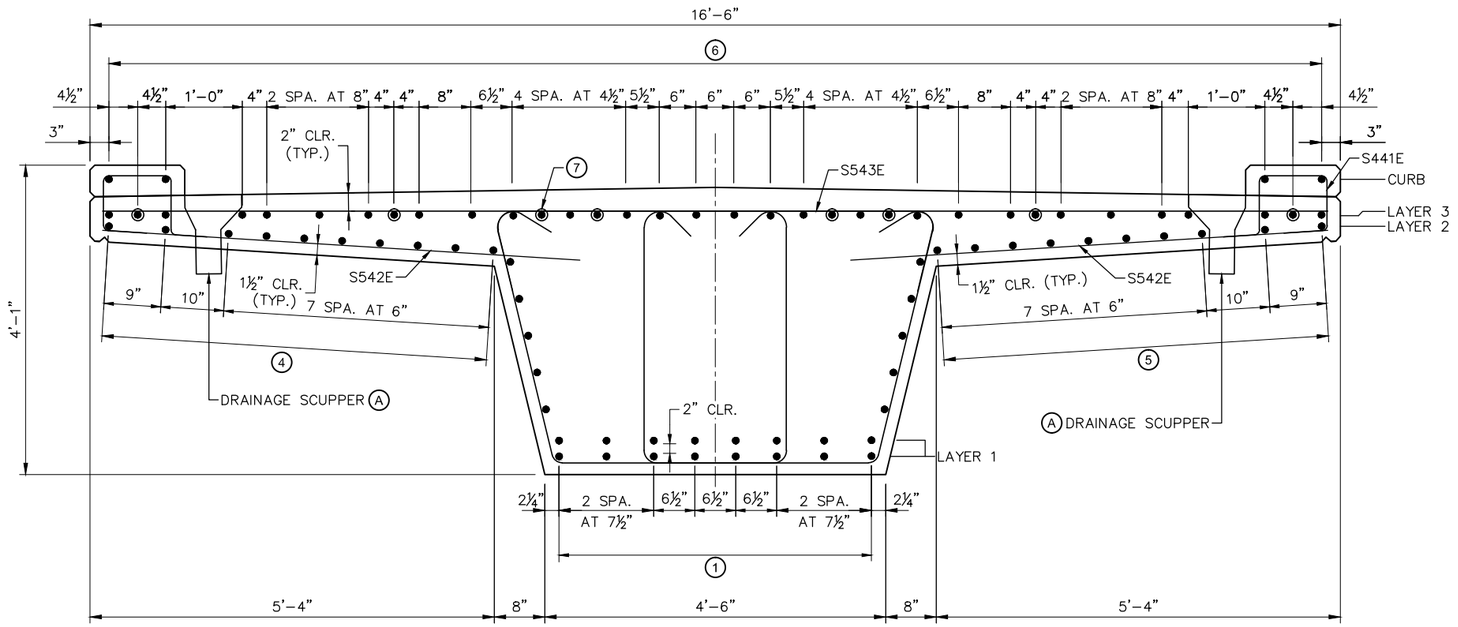

TYPICAL PIER SECTION

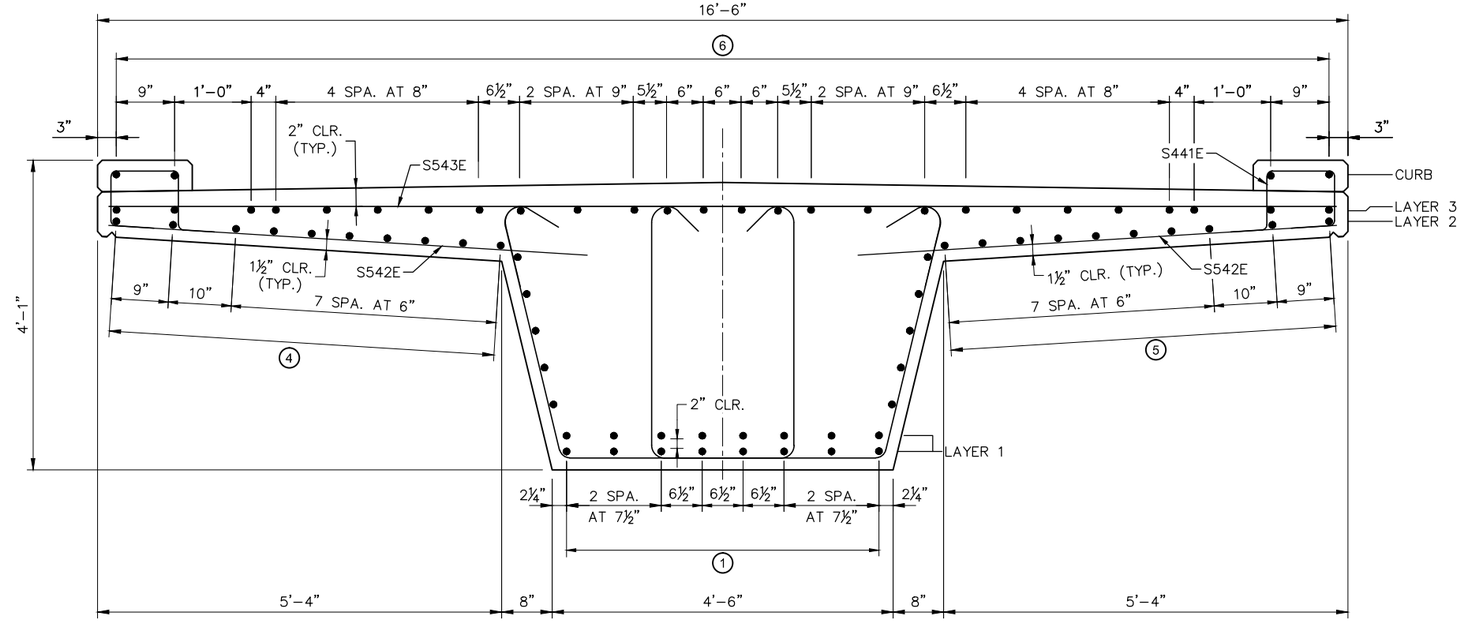

TYPICAL MIDSPAN SECTION

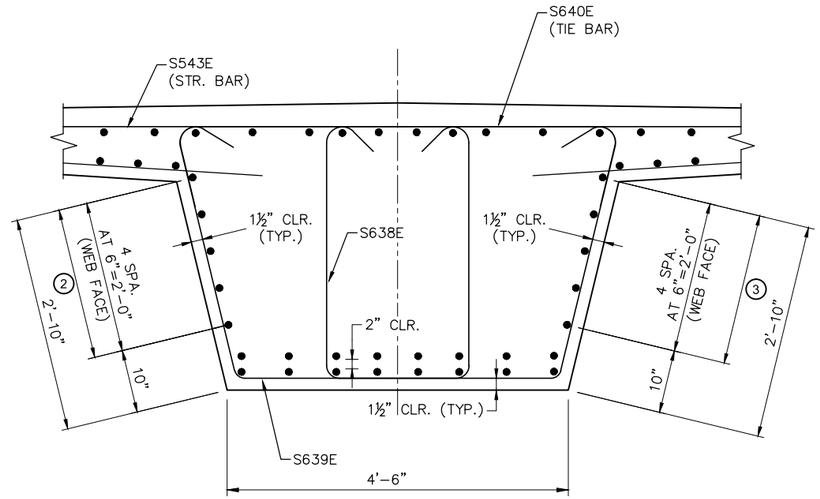

WEB SECTION

SECTION SHOWN AT MIDSPAN, SIMILAR THROUGHOUT SUPERSTRUCTURE

REINFORCEMENT NOTES:

1. LAYER 1 S1001E, S1002E, S1003E, S1004E, S1005E
2. NORTH WEB FACE S606E, S607E, S608E, S609E, S610E, S611E
3. SOUTH WEB FACE S606E, S607E, S608E, S609E, S610E, S611E
4. NORTH LAYER 2 S612E, S613E, S614E, S615E, S616E, S617E, S618E, S619E
5. SOUTH LAYER 2 S612E, S613E, S614E, S615E, S616E, S617E, S618E, S619E
6. LAYER 3 S820E, S821E, S822E, S823E, S824E, S825E, S826E
7. LAYER 3 S1027E, S1028E, S1029E, S1030E

NOTES:

A. DRAINAGE SCUPPER TYPE NEENAH R-4015-A BRIDGE SCUPPER WITH TYPE P GRATE OR EQUIVALENT. FOR PLACEMENT OF DRAINAGE SCUPPER SEE SUPERSTRUCTURE DETAILS ON SHEETS 30-34. FOR SPLASH BLOCK DETAIL SEE CIVIL PLANS.

NO.	DATE	BY	CHECK	DESIGN	REVISION / SUBMITTAL

DESIGNED BY: CAD | CHECKED BY: LKZ
DRAWN BY: AMC | CHECKED BY: MTC

AECOM Kimley»Horn

90% SUBMISSION - 01/22/16

METROPOLITAN COUNCIL

SOUTHWEST Green Line LRT Extension

CIVIL - VOLUME 4F
CEDAR LAKE TRAIL - BELTLINE STATION
BRIDGE R0692 (TRL)
SUPERSTRUCTURE DETAILS 1

DISCIPLINE: STRUCTURES
SHEET NAME: CBRR0692-BRG-SUP-002

SHEET 31 OF 60

Jan, 13 2016 03:56 pm V:\3400_ADC\CAD\SEGMENT E2\PLAN SHEETS\STRUCTURES\CLRT-TRL\CBRR0692-BRG-SUP-002.dwg By: Caitlyn.Deutsch

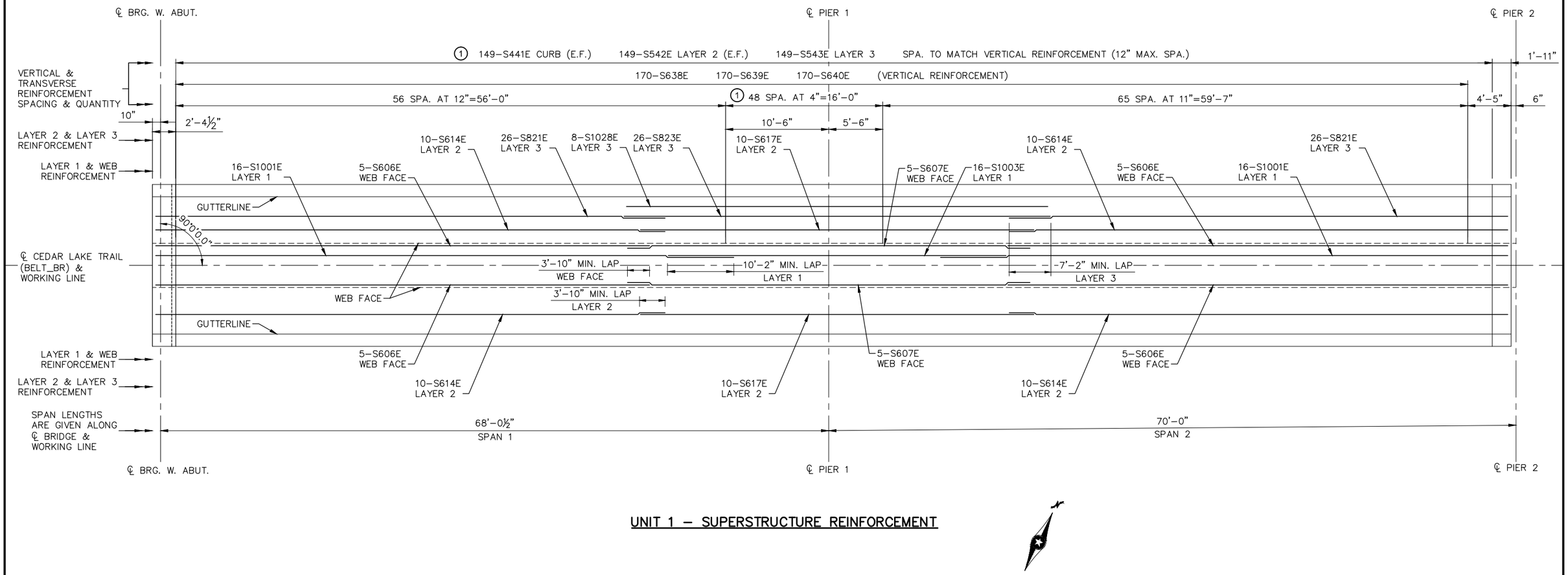

UNIT 1 – SUPERSTRUCTURE REINFORCEMENT

NOTES:

① WHEN VERTICAL REINFORCEMENT IS PLACED AT 4" SPACING, THE TRANSVERSE REINFORCEMENT IS PLACED TO MATCH EVERY OTHER VERTICAL REINFORCEMENT AT 8" MAXIMUM SPACING.

SEE CURB DETAILS ON SHEETS 38–42 FOR QUANTITY AND PLACEMENT OF LONGITUDINAL CURB REINFORCEMENT.

F.F. DENOTES FRONT FACE.
B.F. DENOTES BACK FACE.
E.F. DENOTES EACH FACE.

NO.	DATE	BY	CHECK	DESIGN	REVISION / SUBMITTAL

DESIGNED BY: CAD CHECKED BY: MTC
DRAWN BY: AMC CHECKED BY: LKZ

AECOM Kimley»Horn

90% SUBMISSION - 01/22/16

METROPOLITAN COUNCIL

SOUTHWEST Green Line LRT Extension

CIVIL - VOLUME 4F
CEDAR LAKE TRAIL - BELTLINE STATION
BRIDGE R0692 (TRL)
SUPERSTRUCTURE DETAILS 2

DISCIPLINE: STRUCTURES
SHEET NAME: CBRR0692-BRG-SUP-003

SHEET 32 OF 60

Jan, 13 2016 03:57 pm V:\3400_ADC\CAD\SEGMENT E2\PLAN SHEETS\STRUCTURES\CLRT-TRL\CBRR0692-BRG-SUP-003.dwg By: Caitlyn.Deutsch

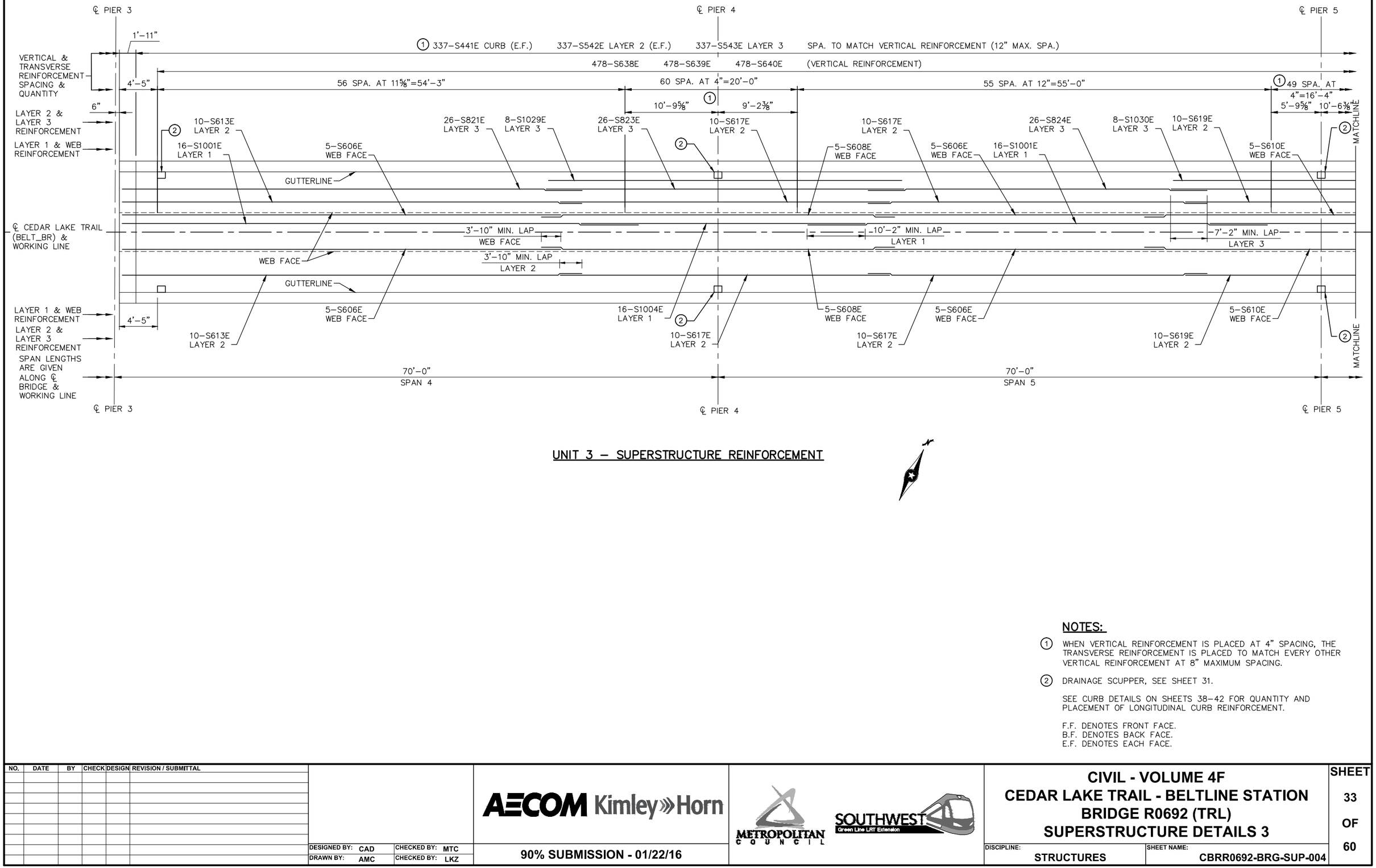

UNIT 3 – SUPERSTRUCTURE REINFORCEMENT

NOTES:

① WHEN VERTICAL REINFORCEMENT IS PLACED AT 4" SPACING, THE TRANSVERSE REINFORCEMENT IS PLACED TO MATCH EVERY OTHER VERTICAL REINFORCEMENT AT 8" MAXIMUM SPACING.

② DRAINAGE SCUPPER, SEE SHEET 31.

SEE CURB DETAILS ON SHEETS 38–42 FOR QUANTITY AND PLACEMENT OF LONGITUDINAL CURB REINFORCEMENT.

F.F. DENOTES FRONT FACE.
B.F. DENOTES BACK FACE.
E.F. DENOTES EACH FACE.

NO.	DATE	BY	CHECK	DESIGN	REVISION / SUBMITTAL

DESIGNED BY: CAD | CHECKED BY: MTC
DRAWN BY: AMC | CHECKED BY: LKZ

AECOM Kimley»Horn

90% SUBMISSION - 01/22/16

METROPOLITAN COUNCIL

SOUTHWEST Green Line LRT Extension

CIVIL - VOLUME 4F
CEDAR LAKE TRAIL - BELTLINE STATION
BRIDGE R0692 (TRL)
SUPERSTRUCTURE DETAILS 3

DISCIPLINE: STRUCTURES
SHEET NAME: CBRR0692-BRG-SUP-004

SHEET 33 OF 60

Jan, 13 2016 03:57 pm V:\3400_ADC\CAD\SEGMENT E2\PLAN SHEETS\STRUCTURES\CLRT-TRL\CBRR0692-BRG-SUP-004.dwg By: Caitlyn.Deutsch

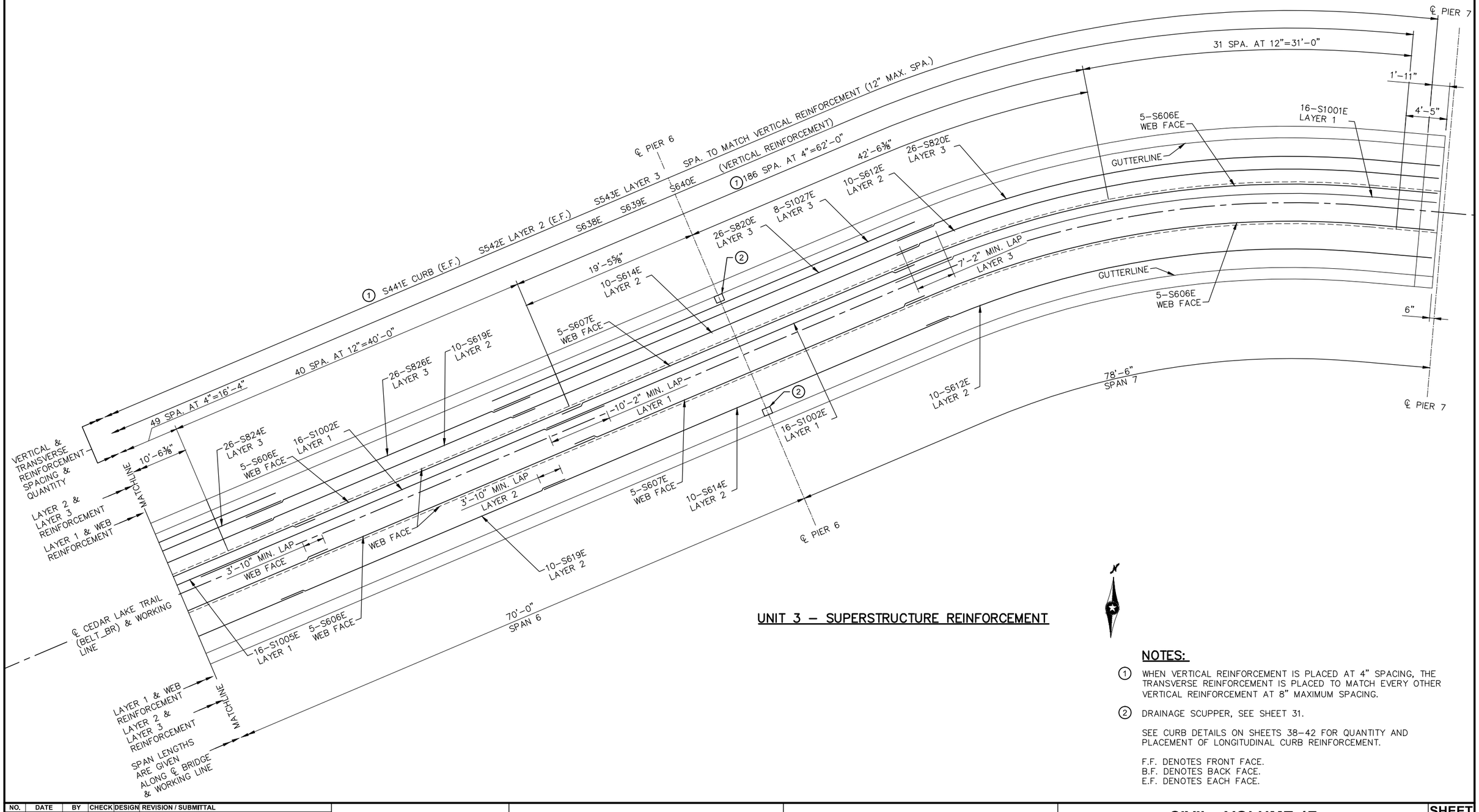

UNIT 3 – SUPERSTRUCTURE REINFORCEMENT

NOTES:

① WHEN VERTICAL REINFORCEMENT IS PLACED AT 4" SPACING, THE TRANSVERSE REINFORCEMENT IS PLACED TO MATCH EVERY OTHER VERTICAL REINFORCEMENT AT 8" MAXIMUM SPACING.

② DRAINAGE SCUPPER, SEE SHEET 31.

SEE CURB DETAILS ON SHEETS 38–42 FOR QUANTITY AND PLACEMENT OF LONGITUDINAL CURB REINFORCEMENT.

F.F. DENOTES FRONT FACE.
B.F. DENOTES BACK FACE.
E.F. DENOTES EACH FACE.

NO.	DATE	BY	CHECK	DESIGN	REVISION / SUBMITTAL

DESIGNED BY: CAD | CHECKED BY: MTC
DRAWN BY: AMC | CHECKED BY: LKZ

AECOM Kimley»Horn

90% SUBMISSION - 01/22/16

METROPOLITAN COUNCIL

SOUTHWEST Green Line LRT Extension

CIVIL - VOLUME 4F
CEDAR LAKE TRAIL - BELTLINE STATION
BRIDGE R0692 (TRL)
SUPERSTRUCTURE DETAILS 4

DISCIPLINE: STRUCTURES
SHEET NAME: CBRR0692-BRG-SUP-005

SHEET 34 OF 60

Jan, 13 2016 03:58 pm V:\3400_ADC\CAD\SEGMENT E2\PLAN SHEETS\STRUCTURES\CLRT-TRL\CBRR0692-BRG-SUP-005.dwg By: Caitlyn.Deutsch

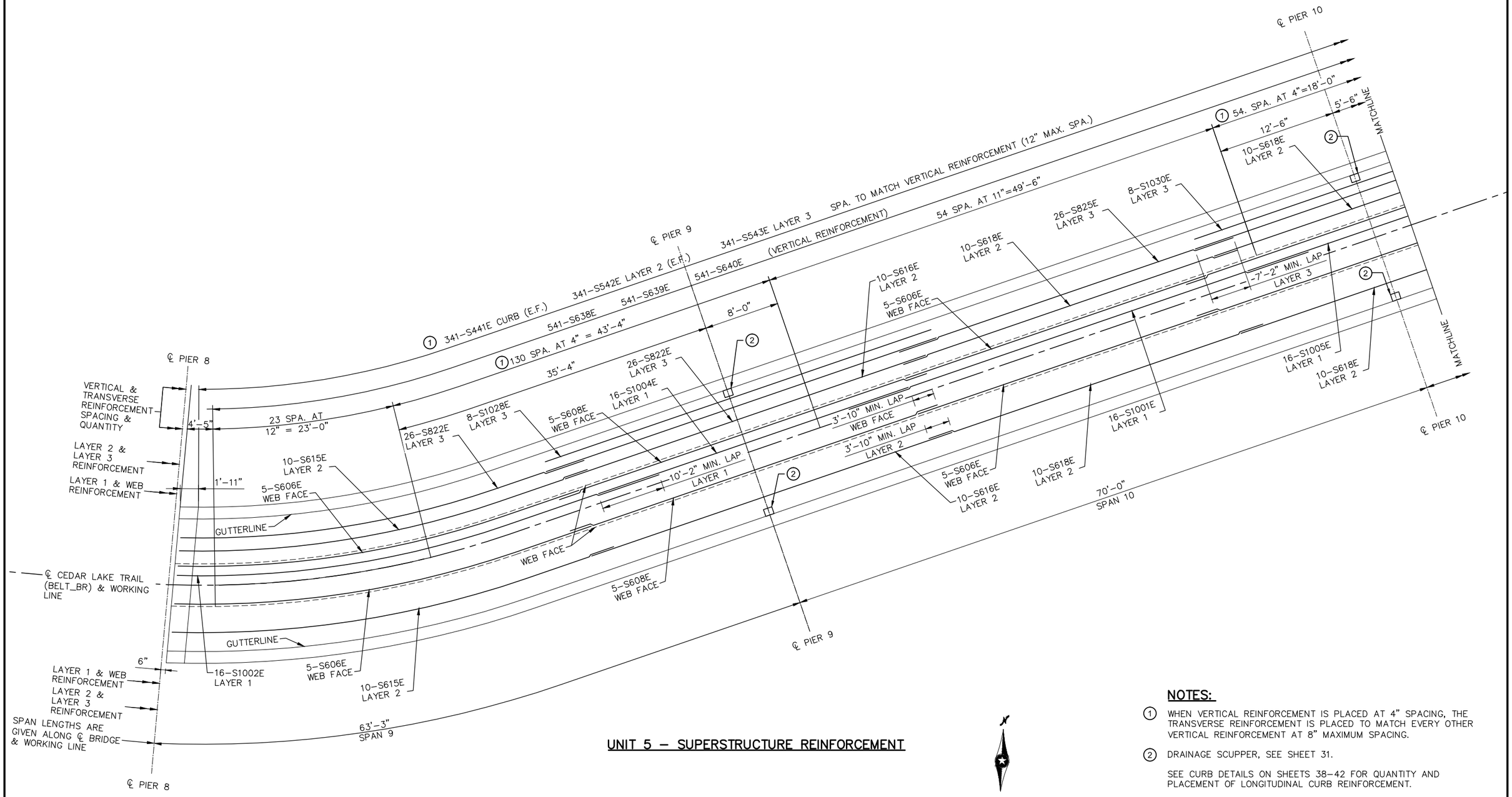

UNIT 5 – SUPERSTRUCTURE REINFORCEMENT

NOTES:

1. WHEN VERTICAL REINFORCEMENT IS PLACED AT 4" SPACING, THE TRANSVERSE REINFORCEMENT IS PLACED TO MATCH EVERY OTHER VERTICAL REINFORCEMENT AT 8" MAXIMUM SPACING.
2. DRAINAGE SCUPPER, SEE SHEET 31.

SEE CURB DETAILS ON SHEETS 38–42 FOR QUANTITY AND PLACEMENT OF LONGITUDINAL CURB REINFORCEMENT.

F.F. DENOTES FRONT FACE.
B.F. DENOTES BACK FACE.
E.F. DENOTES EACH FACE.

NO.	DATE	BY	CHECK	DESIGN	REVISION / SUBMITTAL

DESIGNED BY: CAD | CHECKED BY: MTC
DRAWN BY: AMC | CHECKED BY: LKZ

AECOM Kimley»Horn

90% SUBMISSION - 01/22/16

METROPOLITAN COUNCIL

SOUTHWEST Green Line LRT Extension

CIVIL - VOLUME 4F
CEDAR LAKE TRAIL - BELTLINE STATION
BRIDGE R0692 (TRL)
SUPERSTRUCTURE DETAILS 5

DISCIPLINE: STRUCTURES
SHEET NAME: CBRR0692-BRG-SUP-006

SHEET 35 OF 60

Jan, 13 2016 03:58 pm V:\3400_ADC\CAD\SEGMENT E2\PLAN SHEETS\STRUCTURES\CLRT-TRL\CBRR0692-BRG-SUP-006.dwg By: Caitlyn.Deutsch

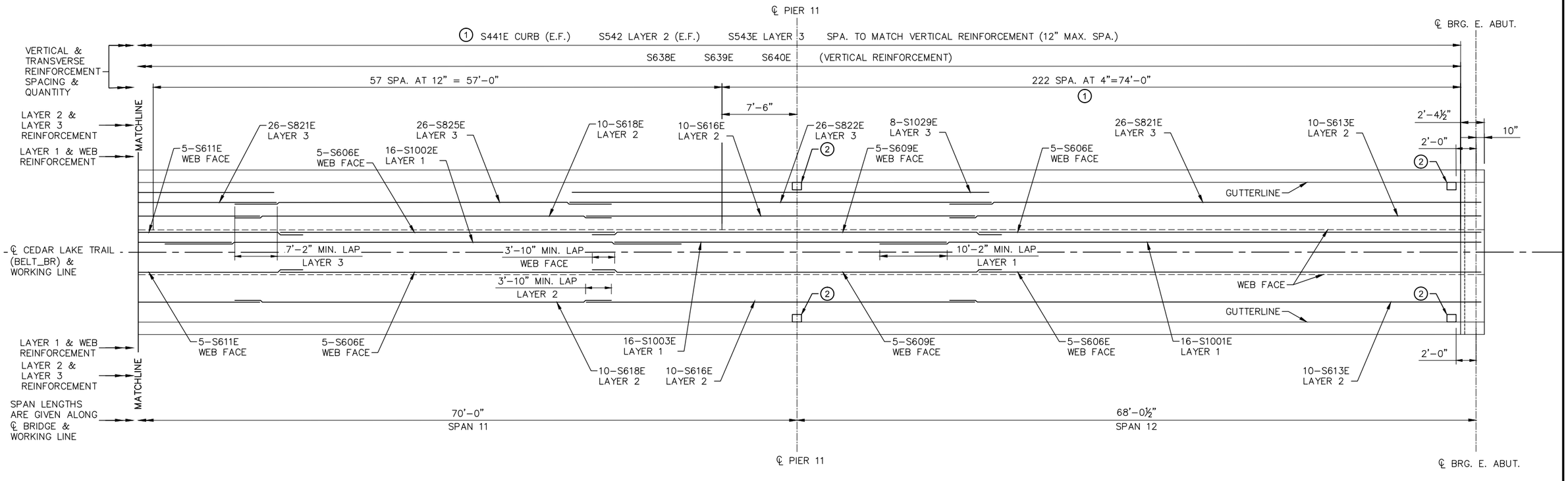

UNIT 5 – SUPERSTRUCTURE REINFORCEMENT

NOTES:

① WHEN VERTICAL REINFORCEMENT IS PLACED AT 4" SPACING, THE TRANSVERSE REINFORCEMENT IS PLACED TO MATCH EVERY OTHER VERTICAL REINFORCEMENT AT 8" MAXIMUM SPACING.

② DRAINAGE SCUPPER, SEE SHEET 31.

SEE CURB DETAILS ON SHEETS 38–42 FOR QUANTITY AND PLACEMENT OF LONGITUDINAL CURB REINFORCEMENT.

F.F. DENOTES FRONT FACE.
B.F. DENOTES BACK FACE.
E.F. DENOTES EACH FACE.

NO.	DATE	BY	CHECK	DESIGN	REVISION / SUBMITTAL

DESIGNED BY: CAD | CHECKED BY: MTC
DRAWN BY: AMC | CHECKED BY: LKZ

AECOM Kimley»Horn

90% SUBMISSION - 01/22/16

METROPOLITAN COUNCIL

SOUTHWEST Green Line LRT Extension

CIVIL - VOLUME 4F
CEDAR LAKE TRAIL - BELTLINE STATION
BRIDGE R0692 (TRL)
SUPERSTRUCTURE DETAILS 6

DISCIPLINE: STRUCTURES
SHEET NAME: CBRR0692-BRG-SUP-007

SHEET 36 OF 60

Jan, 13 2016 03:59 pm V:\3400_ADC\CAD\SEGMENT E2\PLAN SHEETS\STRUCTURES\CLRT-TRL\CBRR0692-BRG-SUP-007.dwg By: Caitlyn.Deutsch

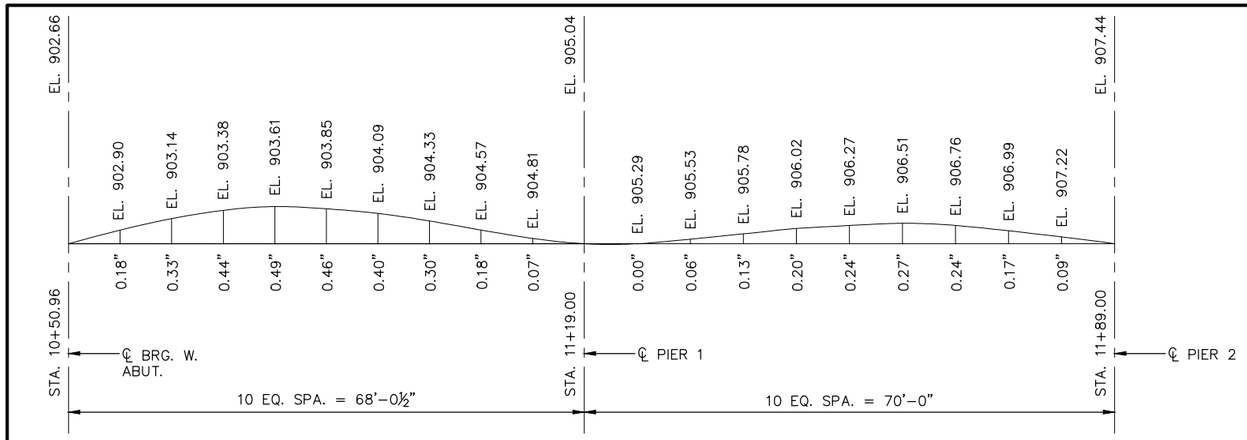

UNIT 1 – CAMBER DIAGRAM

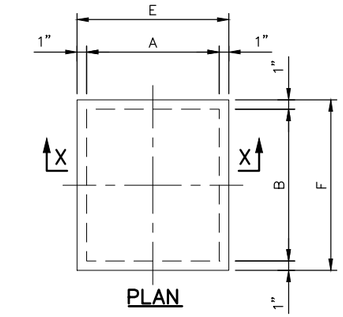

PLAN

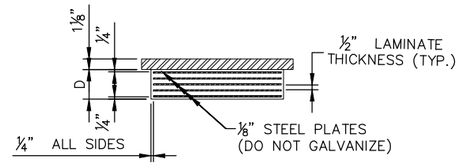

SECTION X–X

ELASTOMERIC BEARING ASSEMBLY

LOCATION	BEARING PAD SIZE			LAMINATES		STEEL PLATES		SHAPE FACTOR	SOLE PLATE (GALVANIZED)					NO. REQ.
	A	B	D	NO.	THICK	NO.	THICK		E	F	G	H	THICK	
W. ABUT.	14"	16"	3⅛"	4	½"	5	⅛"	7.5	16"	18"			1¼"	2
E. ABUT.	14"	16"	3⅛"	4	½"	5	⅛"	7.5	16"	18"			1¼"	2

NOTES:

THE PRICE BID FOR ELASTOMERIC BEARING ASSEMBLY SHALL INCLUDE ALL MATERIAL (SOLE PLATE AND ELASTOMERIC BEARING PAD).

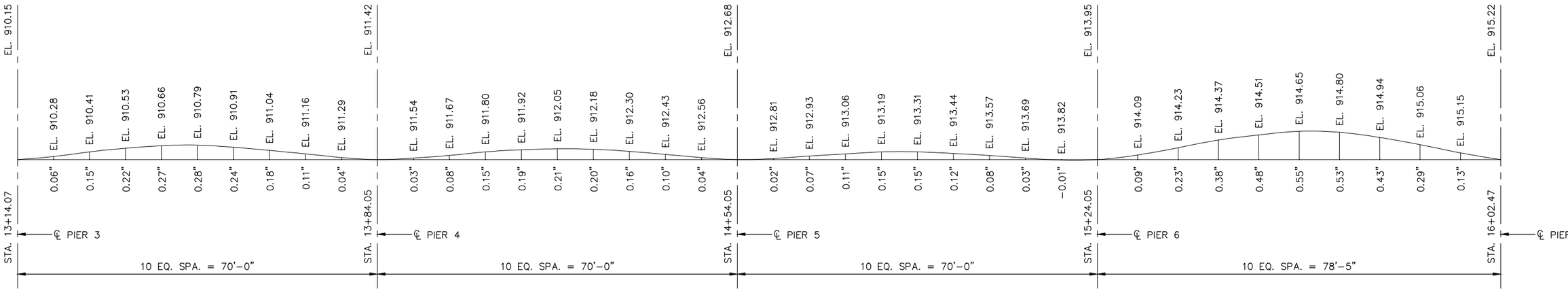

UNIT 3 – CAMBER DIAGRAM

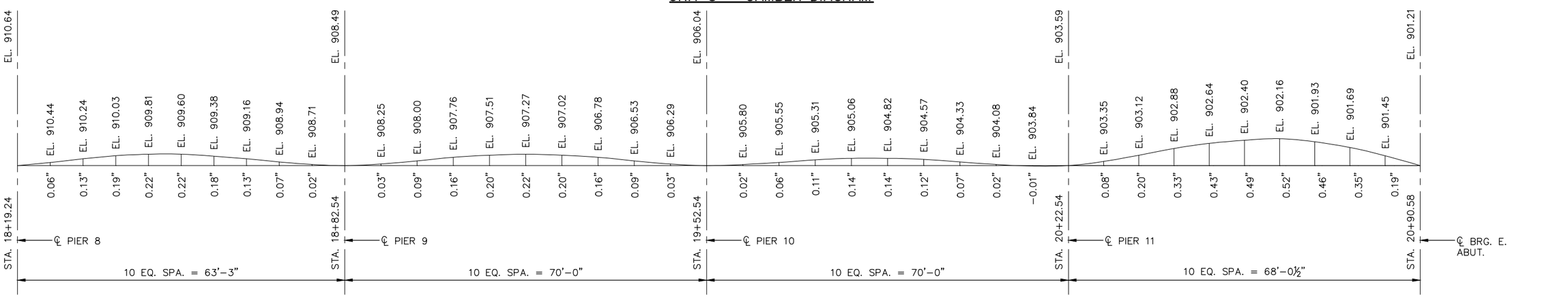

UNIT 5 – CAMBER DIAGRAM

NO.	DATE	BY	CHECK	DESIGN	REVISION / SUBMITTAL

DESIGNED BY: CAD | CHECKED BY: MTC
DRAWN BY: AMC | CHECKED BY: LKZ

AECOM Kimley»Horn

90% SUBMISSION - 01/22/16

METROPOLITAN COUNCIL

SOUTHWEST Green Line LRT Extension

CIVIL - VOLUME 4F
CEDAR LAKE TRAIL - BELTLINE STATION
BRIDGE R0692 (TRL)
SUPERSTRUCTURE DETAILS 7

DISCIPLINE: STRUCTURES

SHEET NAME: CBRR0692-BRG-SUP-008

SHEET 37 OF 60

Jan, 13 2016 03:59 pm V:\3400_ADC\CAD\SEGMENT E2\PLAN SHEETS\STRUCTURES\CLRT-TRL\CBRR0692-BRG-SUP-008.dwg By: Caitlyn.Deutsch

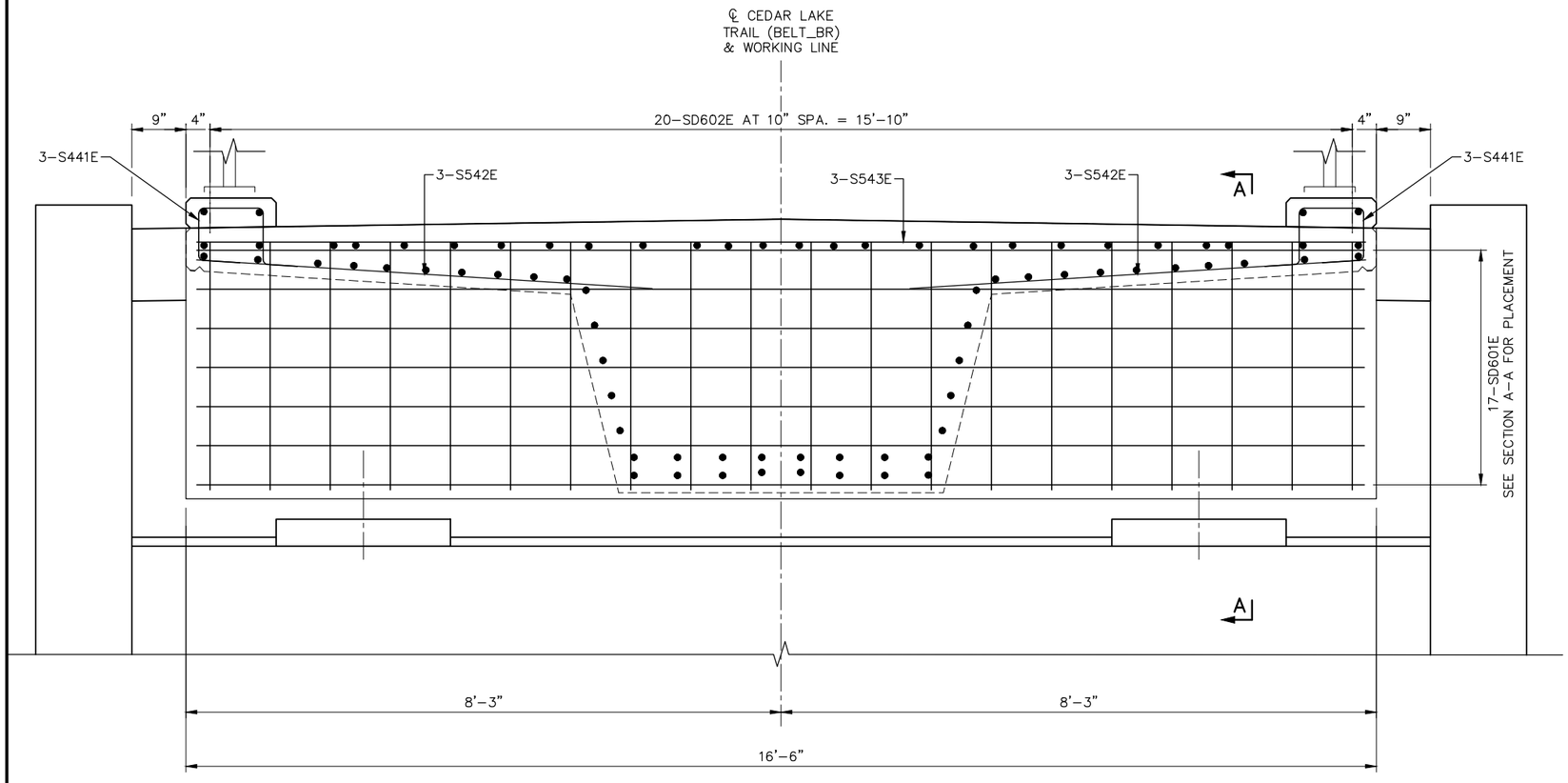

WEST ABUTMENT END DIAPHRAGM

EAST ABUTMENT SIMILAR

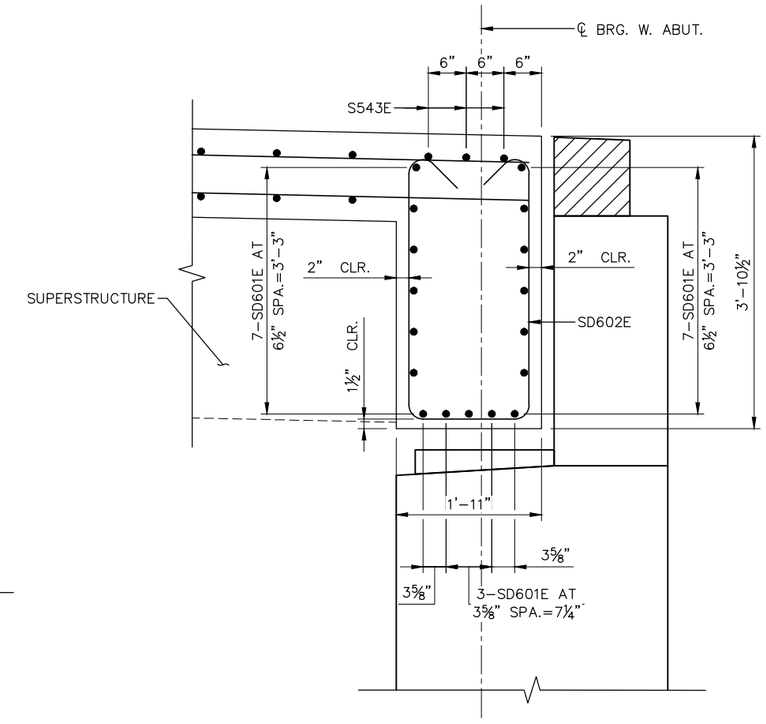

SECTION A–A

NOTES:

F.F. DENOTES FRONT FACE.
B.F. DENOTES BACK FACE.
E.F. DENOTES EACH FACE.

NO.	DATE	BY	CHECK	DESIGN	REVISION / SUBMITTAL

DESIGNED BY: CAD | CHECKED BY: MTC
DRAWN BY: AMC | CHECKED BY: LKZ

AECOM Kimley»Horn

90% SUBMISSION - 01/22/16

METROPOLITAN COUNCIL

SOUTHWEST Green Line LRT Extension

CIVIL - VOLUME 4F
CEDAR LAKE TRAIL - BELTLINE STATION
BRIDGE R0692 (TRL)
END DIAPHRAGM DETAILS

DISCIPLINE: STRUCTURES

SHEET NAME: CBRR0692-BRG-SUP-009

SHEET 38 OF 60

Jan, 13 2016 04:00 pm V:\3400_ADC\CAD\SEGMENT E2\PLAN SHEETS\STRUCTURES\CLRT-TRL\CBRR0692-BRG-SUP-009.dwg By: Caitlyn.Deutsch

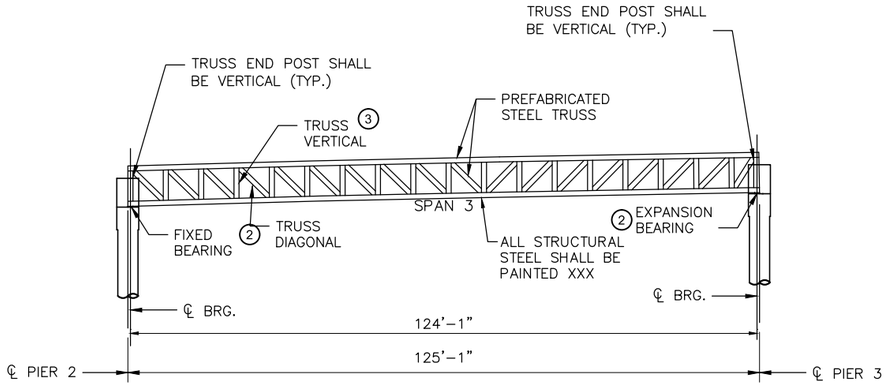

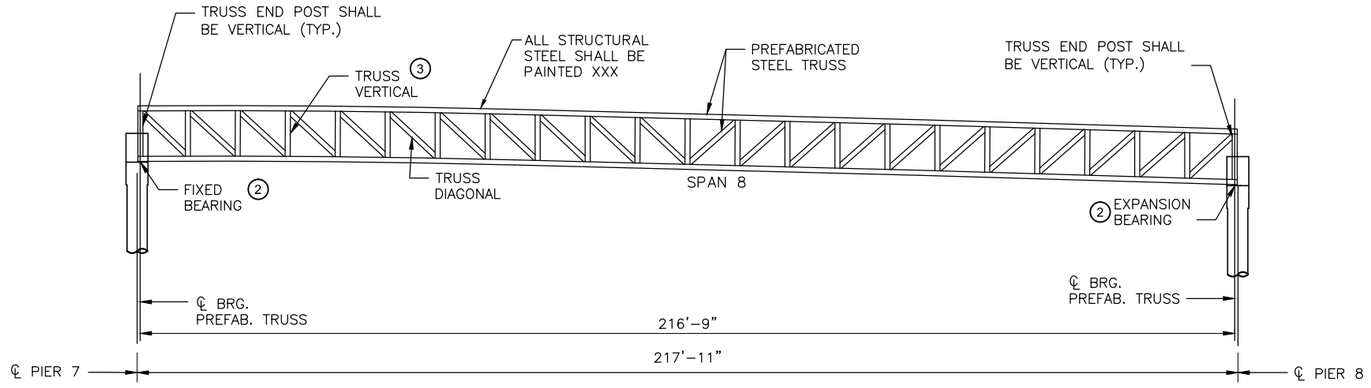

PREFABRICATED TRUSS ELEVATIONS

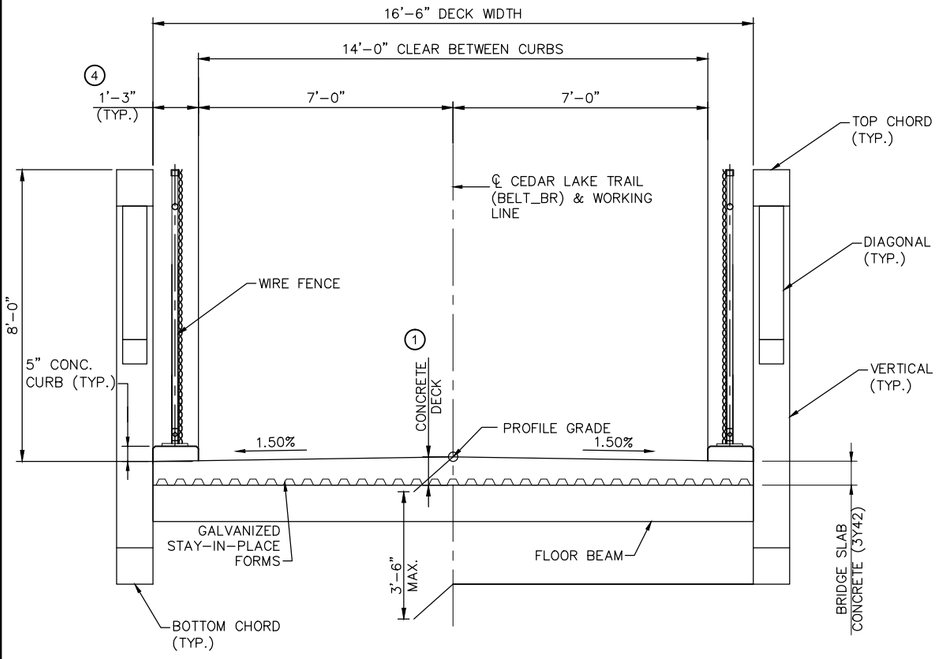

PREFABRICATED TRUSS SECTION

NOTES:

TRUSS MEMBERS AND RAILING SHALL BE FABRICATED FROM HIGH STRENGTH, LOW ALLOY, ENHANCED ATMOSPHERIC CORROSION RESISTANT ASTM A847 COLD–FORMED WELDED SQUARE AND RECTANGULAR TUBING AND METAL HANDRAIL FROM ASTM A847 PIPE (Fy=50,000 PSI) FOR ACE). METAL PICKETS AND MISCELLANEOUS PARTS SHALL BE FABRICATED FROM ASTM A588, ASTM A606, OR ASTM A242 PLATE, BAR AND STRUCTURAL SHAPES (Fy=50,000 PSI).

MAXIMUM TRUSS BEARING LOADS SHOWN IN THE TABLE WERE ASSUMED BASED ON PRE–BID COORDINATION WITH PREFABRICATED STEEL TRUSS MANUFACTURES. UNFACTORED LOADS ARE SHOWN.

DESIGN SHALL BE IN ACCORDANCE WITH 2014 AND CURRENT INTERIM AASHTO LRFD BRIDGE DESIGN SPECIFICATIONS AND 2009 LRFD GUIDE SPECIFICATIONS FOR THE DESIGN OF PEDESTRIAN BRIDGES.

ALL STRUCTURE TUBING SHALL BE EITHER WATER TIGHT OR DESIGNED SO THAT MOISTURE ISN'T TRAPPED IN TUBES, SUCH AS MIN. ⅜" WEEP HOLES AT BOTH ENDS OF TUBES.

ANCHOR ROD DESIGN & DETERMINATION OF LOCATIONS AT THE PIERS WILL BE DETERMINED BY THE PREFABRICATED STEEL TRUSS MANUFACTURER AND CONTRACTORS SHALL COORDINATE REINFORCEMENT PLACEMENT/ADJUSTMENT IN PIER CAPS AS APPROVED BY ENGINEER IN FIELD.

BEARINGS AT PIERS 2 AND 7 SHALL BE FIXED AND BEARINGS AT PIERS 3 AND 8 SHALL BE EXPANSION.

STRUCTURAL STEEL PLATES FOR THE HANDRAIL CONNECTION SHALL COMPLY WITH SPEC. 3306.

STRUCTURAL STEEL PIPE FOR HANDRAIL SHALL COMPLY WITH SPEC. 3362.

ANCHOR RODS FOR THE TRUSS SHALL COMPLY WITH SPEC. 3385 TYPE C, AND GALVANIZED PER SPEC. 3392.

HARDWARE SHALL BE GALVANIZED PER SPEC. 3392, AND STRUCTURAL BOLTS SHALL MEET ASTM A325, TYPE 1, MECHANICALLY GALVANIZED.

ARCH STRUCTURES OR MEMBERS ARE NOT PERMITTED.

PREFABRICATED STEEL TRUSS MANUFACTURER SHALL DESIGN THE CONCRETE DECK ON THE PREFABRICATED STEEL TRUSS AND TRANSVERSE AND LONGITUDINAL DECK REINFORCEMENT. THE DECK REINFORCING, (5) NO. 4 LONGITUDINAL CURB REINFORCEMENT BAR PER CURB, AND NO. 4 BENT TIES IN EACH CURB TO MATCH TRANSVERSE DECK BAR SPACING FOR THE CONCRETE DECK. THE PREFABRICATED STEEL TRUSS SHALL BE FURNISHED AND INSTALLED BY THE CONTRACTOR.

(1) SEE ABUTMENT AND PIER DETAILS SHEETS FOR BEARING SEAT ELEVATIONS.

TRUSS VERTICALS SHALL BE UNIFORMLY SPACED ALONG LENGTH OF BRIDGE WITH A MAXIMUM SPACING OF 8'–0".

(2) MAINTAIN 1'–3" WIDE CONCRETE CURB FULL LENGTH OF TRUSS INCLUDING AT END POSTS.

(3) PREFABRICATED STEEL TRUSS (SPAN 2) SHALL USE AN OPEN TOP SOLUTION WITH UNLIMITED VERTICAL CLEARANCE BETWEEN HANDRAILS/CURBS.

(4) PREFABRICATED STEEL TRUSS (SPAN 4) IS BE PERMITTED TO USE TOP STRUTS. VERTICAL CLEARANCE OF 10'–0" SHALL BE MAINTAINED BETWEEN HANDRAILS/CURBS.

BEARING SEAT ELEVATIONS ON SHEET 6 ARE BASED ON AN ASSUMED SUPERSTRUCTURE DEPTH OF 3'–6" AND AN ASSUMED BEARING PAD ASSEMBLY DEPTH OF 5". SHOULD THE CONTRACTOR CHOOSE A SOLUTION THAT RESULTS IN DIFFERENCES IN THESE KEY DIMENSIONS, THE BEARING PEDESTAL ELEVATIONS WILL NEED TO BE ADJUSTED ACCORDINGLY.

BRIDGE REACTIONS USED FOR SUBSTRUCTURE DESIGN

COMBINE REACTIONS AS PER 2014 AND CURRENT INTERIM AASHTO LRFD BRIDGE DESIGN SPECIFICATIONS AND 2009 LRFD GUIDE SPECIFICATIONS FOR THE DESIGN OF PEDESTRIAN BRIDGES.

REACTIONS ARE NOT TO BE EXCEEDED WITHOUT APPROVAL BY THE ENGINEER SEALING THESE BRIDGE PLANS. LOADS ARE UNFACTORED.

LOAD	P (LBS)	H (LBS)	L (LBS)
DEAD	95500		
UNIFORM LIVE	62650		
VEHICLE LIVE	20000		
WIND UPLIFT (20 psf)	43750		
WIND +/– 19.195	13200	40000	
THERMAL			14325

"P" – VERTICAL LOAD EACH BEARING PLATE (4 PER SPANS X&X) + DOWNWARD LOAD
"H" – HORIZONTAL LOAD EACH BEARING PLATE (2 PER SPANS X&X) – UPWARD LOAD
"L" – LONGITUDINAL LOAD EACH BEARING PLATE (4 PER SPANS X&X)

NO.	DATE	BY	CHECK	DESIGN	REVISION / SUBMITTAL

DESIGNED BY: CAD CHECKED BY: LKZ
DRAWN BY: AMC CHECKED BY: MTC

AECOM Kimley»Horn

90% SUBMISSION - 01/22/16

METROPOLITAN COUNCIL

SOUTHWEST Green Line LRT Extension

CIVIL - VOLUME 4F
CEDAR LAKE TRAIL - BELTLINE STATION
BRIDGE R0692 (TRL)
PREFABRICATED TRUSS

DISCIPLINE: STRUCTURES
SHEET NAME: CBRR0692-BRG-SUP-010

SHEET 39 OF 60

Jan, 13 2016 04:01 pm V:\3400_ADC\CAD\SEGMENT E2\PLAN SHEETS\STRUCTURES\CLRT-TRL\CBRR0692-BRG-SUP-010.dwg By: Caitlyn.Deutsch

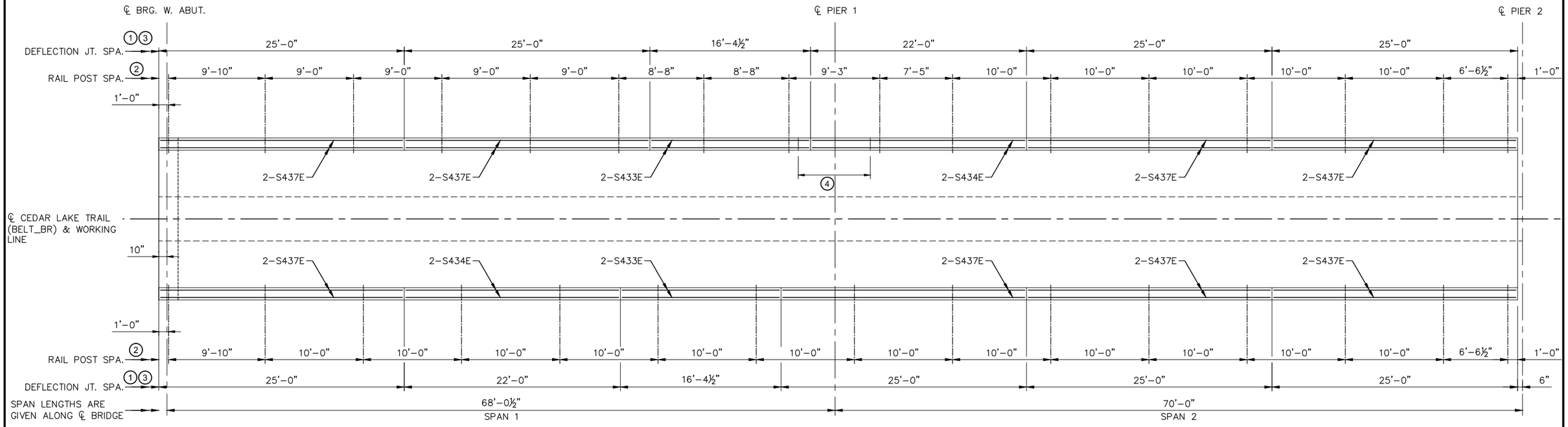

UNIT 1 – CURB DETAILS

NOTES:

① MEASURED ALONG INSIDE FACE OF CURB.

② MEASURED ALONG CENTERLINE OF RAILING.

③ BREAK BOND AT JOINT IN CURB BY APPROVED METHOD. NO REINFORCEMENT THROUGH JOINT.

④ CURB TO BE LEVEL FOR 5'–0", CENTERED AT PIER. TOP OF CURB TO MATCH TOP OF STAIR PLATFORM.

FINISH TOP OF ALL CURB JOINTS WITH ¼" EDGE AND VERTICAL EDGES WITH ½" V STRIPS.

F.F. DENOTES FRONT FACE.
B.F. DENOTES BACK FACE.
E.F. DENOTES EACH FACE.

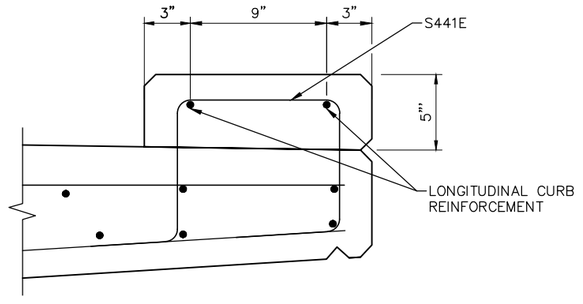

TYPICAL CURB SECTION

NO.	DATE	BY	CHECK	DESIGN	REVISION / SUBMITTAL

DESIGNED BY: CAD | CHECKED BY: LKZ
DRAWN BY: AMC | CHECKED BY: MTC

AECOM Kimley»Horn

90% SUBMISSION - 01/22/16

METROPOLITAN COUNCIL

SOUTHWEST Green Line LRT Extension

CIVIL - VOLUME 4F
CEDAR LAKE TRAIL - BELTLINE STATION
BRIDGE R0692 (TRL)
CURB DETAILS 1

DISCIPLINE: STRUCTURES
SHEET NAME: CBRR0692-BRG-SUP-011

SHEET 40 OF 60

Jan, 13 2016 04:01 pm V:\3400_ADC\CAD\SEGMENT E2\PLAN SHEETS\STRUCTURES\CLRT-TRL\CBRR0692-BRG-SUP-011.dwg By: Caitlyn.Deutsch

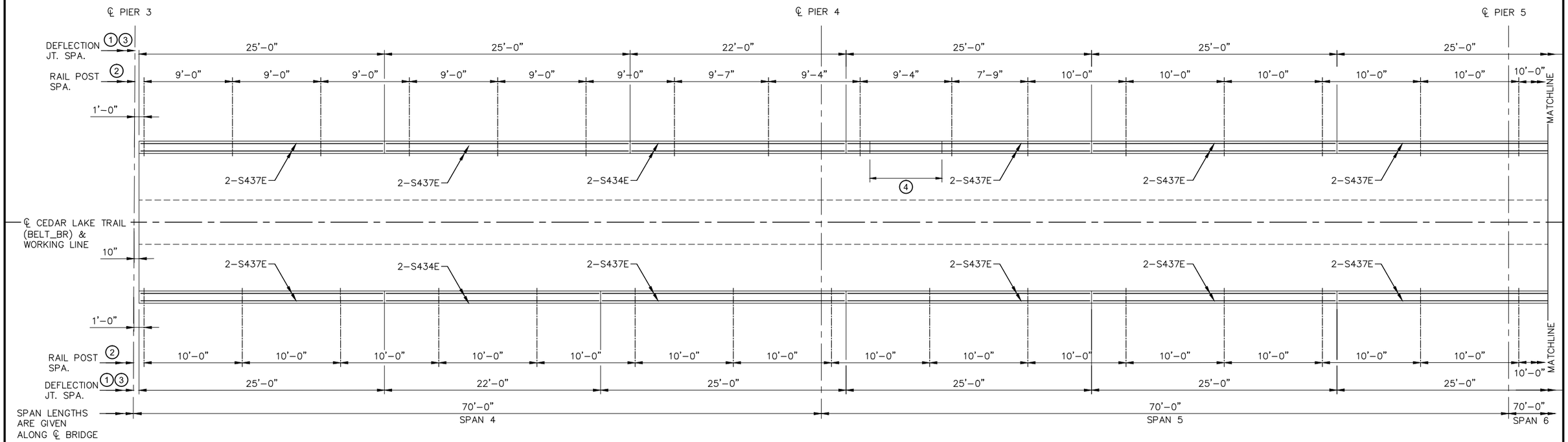

UNIT 3 – CURB DETAILS

NOTES:

1. MEASURED ALONG INSIDE FACE OF CURB.
2. MEASURED ALONG CENTERLINE OF RAILING.
3. BREAK BOND AT JOINT IN CURB BY APPROVED METHOD. NO REINFORCEMENT THROUGH JOINT.
4. CURB TO BE LEVEL FOR 5'–0", CENTERED AT PIER. TOP OF CURB TO MATCH TOP OF STAIR PLATFORM.

   FINISH TOP OF ALL CURB JOINTS WITH ¼" EDGE AND VERTICAL EDGES WITH ½" V STRIPS.

   F.F. DENOTES FRONT FACE.
   B.F. DENOTES BACK FACE.
   E.F. DENOTES EACH FACE.

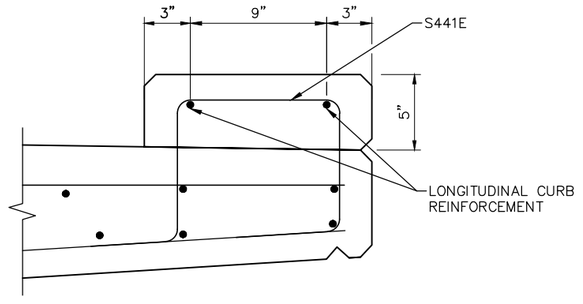

TYPICAL CURB SECTION

NO.	DATE	BY	CHECK	DESIGN	REVISION / SUBMITTAL

DESIGNED BY: CAD | CHECKED BY: LKZ
DRAWN BY: AMC | CHECKED BY: MTC

AECOM Kimley»Horn

90% SUBMISSION - 01/22/16

METROPOLITAN COUNCIL

SOUTHWEST Green Line LRT Extension

CIVIL - VOLUME 4F
CEDAR LAKE TRAIL - BELTLINE STATION
BRIDGE R0692 (TRL)
CURB DETAILS 2

DISCIPLINE: STRUCTURES
SHEET NAME: CBRR0692-BRG-SUP-012

SHEET 41 OF 60

Jan, 13 2016 04:01 pm V:\3400_ADC\CAD\SEGMENT E2\PLAN SHEETS\STRUCTURES\CLRT-TRL\CBRR0692-BRG-SUP-012.dwg By: Caitlyn.Deutsch

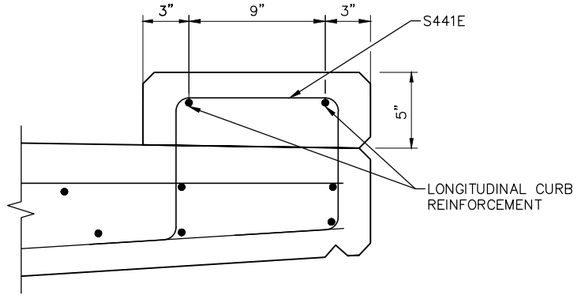

TYPICAL CURB SECTION

UNIT 3 – CURB DETAILS

NOTES:

① MEASURED ALONG INSIDE FACE OF CURB.

② MEASURED ALONG CENTERLINE OF RAILING.

③ BREAK BOND AT JOINT IN CURB BY APPROVED METHOD. NO REINFORCEMENT THROUGH JOINT.

④ CURB TO BE LEVEL FOR 5'–0", CENTERED AT PIER. TOP OF CURB TO MATCH TOP OF STAIR PLATFORM.

FINISH TOP OF ALL CURB JOINTS WITH ¼" EDGE AND VERTICAL EDGES WITH ½" V STRIPS.

F.F. DENOTES FRONT FACE.
B.F. DENOTES BACK FACE.
E.F. DENOTES EACH FACE.

NO.	DATE	BY	CHECK	DESIGN	REVISION / SUBMITTAL

DESIGNED BY: CAD | CHECKED BY: LKZ
DRAWN BY: AMC | CHECKED BY: MTC

AECOM Kimley»Horn

90% SUBMISSION - 01/22/16

METROPOLITAN COUNCIL

SOUTHWEST Green Line LRT Extension

CIVIL - VOLUME 4F
CEDAR LAKE TRAIL - BELTLINE STATION
BRIDGE R0692 (TRL)
CURB DETAILS 3

DISCIPLINE: STRUCTURES

SHEET NAME: CBRR0692-BRG-SUP-013

SHEET 42 OF 60

Jan, 13 2016 04:02 pm V:\3400_ADC\CAD\SEGMENT E2\PLAN SHEETS\STRUCTURES\CLRT-TRL\CBRR0692-BRG-SUP-013.dwg By: Caitlyn.Deutsch

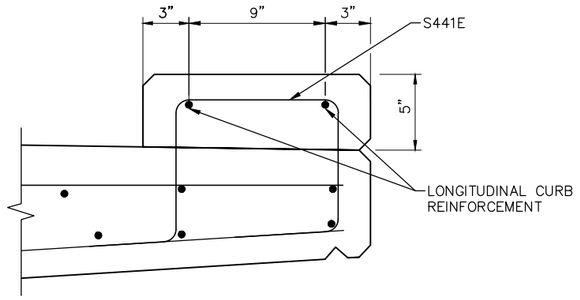

TYPICAL CURB SECTION

UNIT 5 – CURB DETAILS

NOTES:

1. MEASURED ALONG INSIDE FACE OF CURB.
2. MEASURED ALONG CENTERLINE OF RAILING.
3. BREAK BOND AT JOINT IN CURB BY APPROVED METHOD. NO REINFORCEMENT THROUGH JOINT.
4. CURB TO BE LEVEL FOR 5'–0", CENTERED AT PIER. TOP OF CURB TO MATCH TOP OF STAIR PLATFORM.

   FINISH TOP OF ALL CURB JOINTS WITH ¼" EDGE AND VERTICAL EDGES WITH ½" V STRIPS.

   F.F. DENOTES FRONT FACE.
   B.F. DENOTES BACK FACE.
   E.F. DENOTES EACH FACE.

NO.	DATE	BY	CHECK	DESIGN	REVISION / SUBMITTAL

DESIGNED BY: CAD | CHECKED BY: MTC
DRAWN BY: AMC | CHECKED BY: LKZ

AECOM Kimley»Horn

90% SUBMISSION - 01/22/16

METROPOLITAN COUNCIL

SOUTHWEST Green Line LRT Extension

CIVIL - VOLUME 4F
CEDAR LAKE TRAIL - BELTLINE STATION
BRIDGE R0692 (TRL)
CURB DETAILS 4

DISCIPLINE: STRUCTURES
SHEET NAME: CBRR0692-BRG-SUP-014

SHEET 43 OF 60

Jan, 13 2016 04:02 pm V:\3400_ADC\CAD\SEGMENT E2\PLAN SHEETS\STRUCTURES\CLRT-TRL\CBRR0692-BRG-SUP-014.dwg By: Caitlyn.Deutsch

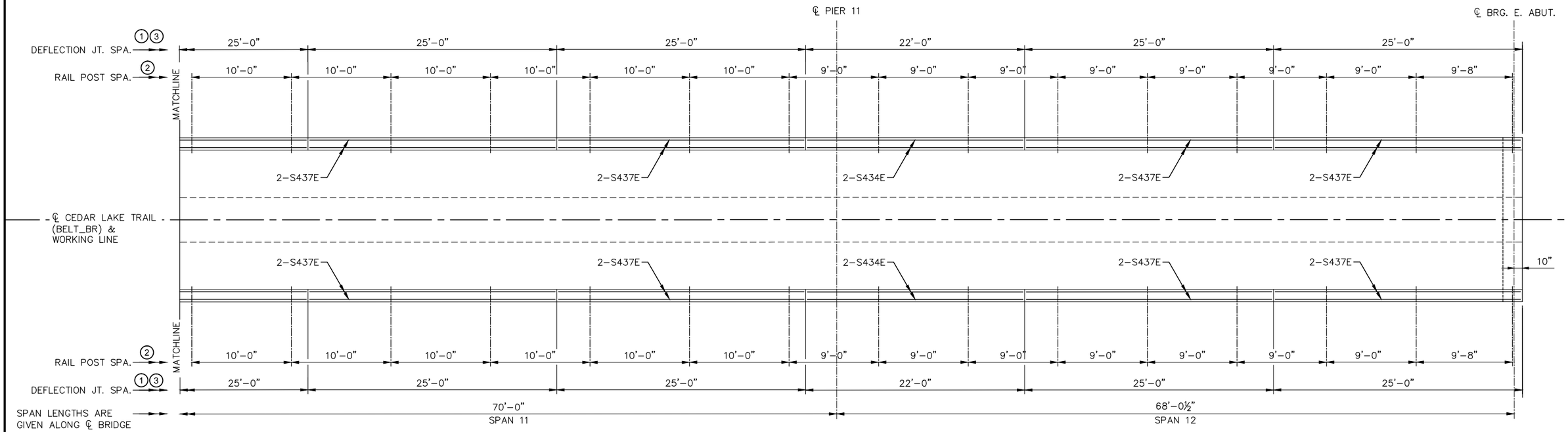

UNIT 5 – CURB DETAILS

NOTES:

① MEASURED ALONG INSIDE FACE OF CURB.

② MEASURED ALONG CENTERLINE OF RAILING.

③ BREAK BOND AT JOINT IN CURB BY APPROVED METHOD. NO REINFORCEMENT THROUGH JOINT.

④ CURB TO BE LEVEL FOR 5'–0", CENTERED AT PIER. TOP OF CURB TO MATCH TOP OF STAIR PLATFORM.

FINISH TOP OF ALL CURB JOINTS WITH ¼" EDGE AND VERTICAL EDGES WITH ½" V STRIPS.

F.F. DENOTES FRONT FACE.
B.F. DENOTES BACK FACE.
E.F. DENOTES EACH FACE.

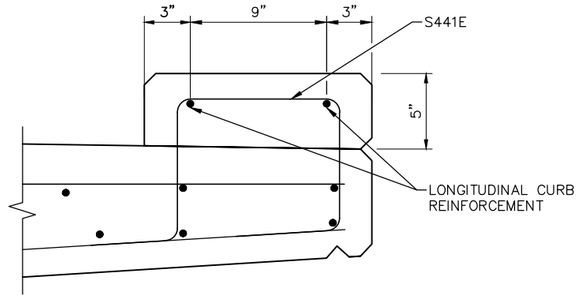

TYPICAL CURB SECTION

NO.	DATE	BY	CHECK	DESIGN	REVISION / SUBMITTAL

DESIGNED BY: CAD | CHECKED BY: MTC
DRAWN BY: AMC | CHECKED BY: LKZ

AECOM Kimley»Horn

90% SUBMISSION - 01/22/16

METROPOLITAN COUNCIL

SOUTHWEST Green Line LRT Extension

CIVIL - VOLUME 4F
CEDAR LAKE TRAIL - BELTLINE STATION
BRIDGE R0692 (TRL)
CURB DETAILS 5

DISCIPLINE: STRUCTURES
SHEET NAME: CBRR0692-BRG-SUP-015

SHEET 44 OF 60

Jan. 13 2016 04:03 pm V:\3400_ADC\CAD\SEGMENT E2\PLAN SHEETS\STRUCTURES\CLRT-TRL\CBRR0692-BRG-SUP-015.dwg By: Caitlyn.Deutsch

BILL OF REINFORCEMENT FOR SUPERSTRUCTURE

BAR	NO.	LENGTH	SHAPE	LOCATION
S1001E	112	60'-0"	STR.	LAYER 1, LONG. BOTTOM REINFORCEMENT
S1002E	64	54'-4"	STR.	LAYER 1, LONG. BOTTOM REINFORCEMENT
S1003E	32	39'-3"	STR.	LAYER 1, LONG. BOTTOM REINFORCEMENT
S1004E	32	36'-7"	STR.	LAYER 1, LONG. BOTTOM REINFORCEMENT
S1005E	32	28'-7"	STR.	LAYER 1, LONG. BOTTOM REINFORCEMENT
S606E	100	50'-0"	STR.	WEB FACE, LONG. REINFORCEMENT
S607E	20	46'-2"	STR.	WEB FACE, LONG. REINFORCEMENT
S608E	20	38'-8"	STR.	WEB FACE, LONG. REINFORCEMENT
S609E	10	33'-2"	STR.	WEB FACE, LONG. REINFORCEMENT
S610E	10	27'-8"	STR.	WEB FACE, LONG. REINFORCEMENT
S611E	10	23'-2"	STR.	WEB FACE, LONG. REINFORCEMENT
S612E	20	60'-0"	STR.	LAYER 2, LONG. REINFORCEMENT
S613E	40	53'-6"	STR.	LAYER 2, LONG. REINFORCEMENT
S614E	60	52'-0"	STR.	LAYER 2, LONG. REINFORCEMENT
S615E	20	49'-0"	STR.	LAYER 2, LONG. REINFORCEMENT
S616E	40	42'-2"	STR.	LAYER 2, LONG. REINFORCEMENT
S617E	60	40'-9"	STR.	LAYER 2, LONG. REINFORCEMENT
S618E	60	37'-6"	STR.	LAYER 2, LONG. REINFORCEMENT
S619E	40	34'-3"	STR.	LAYER 2, LONG. REINFORCEMENT
S820E	52	60'-0"	STR.	LAYER 3, LONG. REINFORCEMENT
S821E	130	53'-0"	STR.	LAYER 3, LONG. REINFORCEMENT
S822E	78	49'-6"	STR.	LAYER 3, LONG. REINFORCEMENT
S823E	52	47'-0"	STR.	LAYER 3, LONG. REINFORCEMENT
S824E	52	40'-6"	STR.	LAYER 3, LONG. REINFORCEMENT
S825E	52	37'-6"	STR.	LAYER 3, LONG. REINFORCEMENT
S826E	26	33'-0"	STR.	LAYER 3, LONG. REINFORCEMENT
S1027E	8	55'-0"	STR.	LAYER 3, PIER LONG. REINFORCEMENT
S1028E	16	48'-7"	STR.	LAYER 3, PIER LONG. REINFORCEMENT
S1029E	16	47'-3"	STR.	LAYER 3, PIER LONG. REINFORCEMENT
S1030E	16	41'-3"	STR.	LAYER 3, PIER LONG. REINFORCEMENT
S431E	2	14'-4"	STR.	CURB, LONG. REINFORCEMENT
S432E	4	15'-0"	STR.	CURB, LONG. REINFORCEMENT
S433E	4	16'-0"	STR.	CURB, LONG. REINFORCEMENT
S434E	18	21'-8"	STR.	CURB, LONG. REINFORCEMENT
S435E	4	21'-10"	STR.	CURB, LONG. REINFORCEMENT
S436E	2	24'-2"	STR.	CURB, LONG. REINFORCEMENT
S437E	84	24'-8"	STR.	CURB, LONG. REINFORCEMENT
S638E	1188	9'-9"	BENT	VERTICAL REINFORCEMENT
S639E	1188	12'-6"	BENT	VERTICAL REINFORCEMENT
S640E	1188	7'-10"	BENT	VERTICAL REINFORCEMENT
S441E	1654	3'-11"	BENT	CURB STIRRUP
S542E	1654	6'-6"	STR.	LAYER 2, TRANS. REINFORCEMENT
S543E	827	16'-2"	STR.	LAYER 3, TRANS. REINFORCEMENT

BILL OF REINFORCEMENT FOR DIAPHRAGM

BAR	NO.	LENGTH	SHAPE	LOCATION
SD601E	34	16'-2"	STR.	END DIAPHRAGM TRANSVERSE
SD602E	40	9'-10"	BENT	END DIAPHRAGM STIRRUP
SD603E	68	12'-2"	BENT	PIER DIAPHRAGM STIRRUP
SD604E	32	16'-2"	STR.	PIER DIAPHRAGM TRANSVERSE
SD605E	32	3'-4"	BENT	PIER DIAPHRAGM TIE

NOTES:

BENT BAR DIMENSIONS GIVEN ARE OUT-TO-OUT. ACTUAL BAR LENGTHS SHALL BE DETERMINED BASED ON THE DETAIL DIMENSIONS SHOWN IN THE BAR BENDING DIAGRAMS. TOTAL BAR LENGTHS ARE SHOWN FOR USE IN COMPUTING REINFORCEMENT BAR WEIGHTS FOR PAYMENT ONLY.

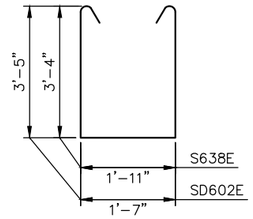

S638E, SD602E

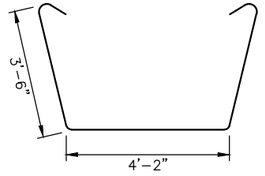

S639E

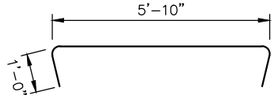

S640E

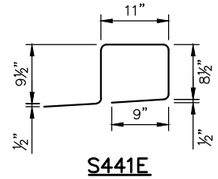

S441E

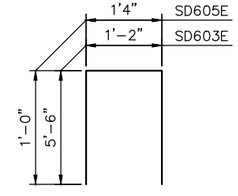

SD603E, SD605E

BAR BENDING DIAGRAMS

NO.	DATE	BY	CHECK	DESIGN	REVISION / SUBMITTAL

DESIGNED BY: CAD | CHECKED BY: MTC
DRAWN BY: AMC | CHECKED BY: LKZ

AECOM Kimley»Horn

90% SUBMISSION - 01/22/16

METROPOLITAN COUNCIL

SOUTHWEST Green Line LRT Extension

CIVIL - VOLUME 4F
CEDAR LAKE TRAIL - BELTLINE STATION
BRIDGE R0692 (TRL)
SUPERSTRUCTURE REINFORCEMENT

DISCIPLINE: STRUCTURES
SHEET NAME: CBRR0692-BRG-TRN-007

SHEET 45 OF 60

Jan, 13 2016 04:04 pm V:\3400_ADC\CAD\SEGMENT E2\PLAN SHEETS\STRUCTURES\CLRT-TRL\CBRR0692-BRG-TRN-007.dwg By: Caitlyn.Deutsch

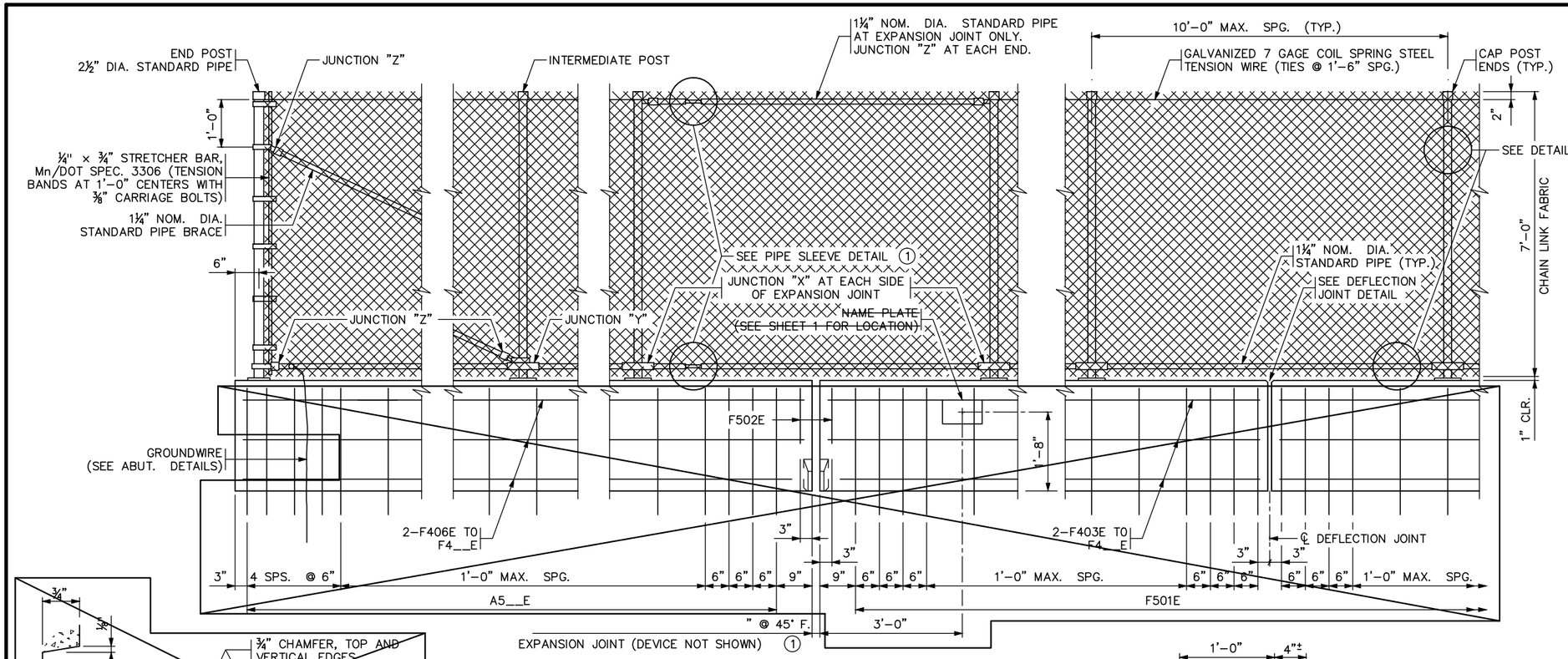

Ⓐ INSIDE ELEVATION OF RAILING

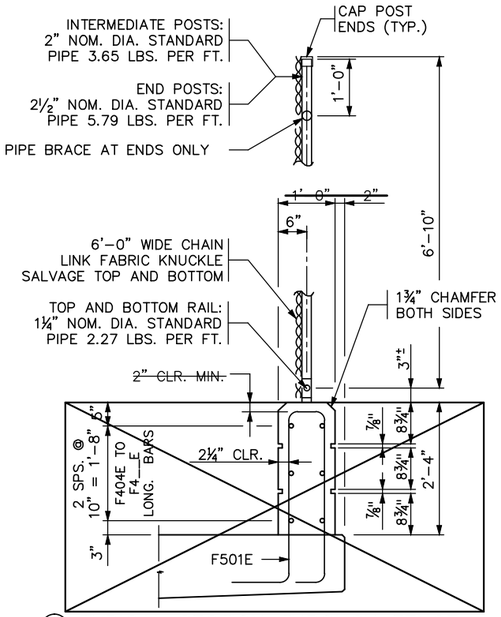

Ⓐ TYPICAL SECTION THROUGH FENCE

INTERMEDIATE POST SHOWN

SHEET MODIFICATION:
Ⓐ DENOTES MODIFICATION TO STANDARD SHEET

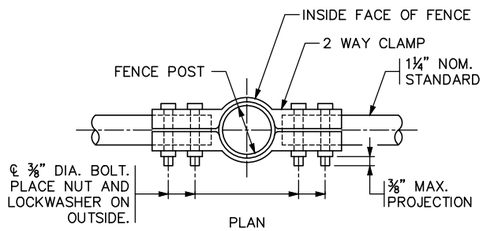

JUNCTION "X"

2 WAY CLAMP BENDING TABLE	
GRADE OF FENCE	Ø
0° TO 2°	0°
2° TO 6°	4°
6° TO 10°	8°

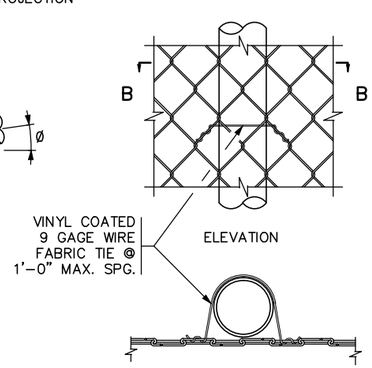

DETAIL "A"

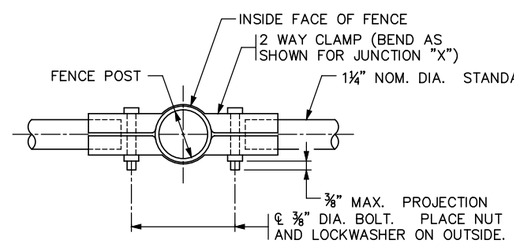

JUNCTION "Y"

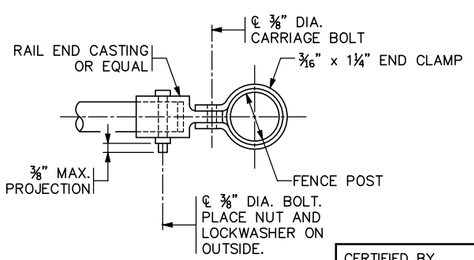

JUNCTION "Z"

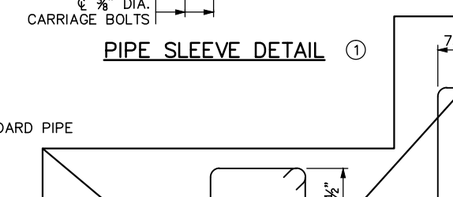

PIPE SLEEVE DETAIL (1)

BILL OF REINFORCEMENT FOR PARAPET				
BAR	NO.	LENGTH	SHAPE	LOCATION
F501E		7'-3"		RAIL BASE VERTICAL
F502E		4'-6"		RAIL BASE VERTICAL
F403E				RAIL BASE LONGITUDINAL
F404E				RAIL BASE LONGITUDINAL

GENERAL NOTES

Ⓐ SEE CONCRETE PARAPET TYPE P-2 FOR DIMENSIONS, REINFORCEMENT AND NOTES.

~~LENGTH OF "TYPE P-1 RAILING CONCRETE (3Y46 OR 3Y46A)" FOR PAYMENT SHALL BE MEASURED BETWEEN THE OUTSIDE FACES OF THE CONCRETE RAIL.~~

Ⓐ LENGTH OF "WIRE FENCE DESIGN 72V-9322" FOR PAYMENT SHALL BE MEASURED BETWEEN THE CENTERS OF END RAILPOSTS.

~~CONCRETE RAILING = 350 LBS./FT. (0.086 CU. YDS./FT.)~~

FENCE POST ANCHORAGES SHALL BE TYPE A. SEE DETAIL B905 "FENCE POST ANCHORAGE".

~~MAXIMUM SPACING OF DEFLECTION JOINTS SHALL BE 20 FT. FOR SPACING OF FENCE POST, JOINTS AND ELECTRICAL GROUNDS, SEE SUPERSTRUCTURE SHEETS.~~

FENCE POSTS AND FENCE POST ANCHORAGES SHALL BE SET VERTICAL, UNLESS OTHERWISE NOTED.

℄ OF FENCE POST ANCHORAGE SHALL BE A MINIMUM OF 6" FROM JOINTS.

END POSTS AND BRACING SHALL BE AT 500 FT. MAXIMUM INTERVALS.

ALL POSTS SHALL HAVE A MEANS TO SECURELY HOLD THE TOP TENSION WIRE IN POSITION AND ALLOW FOR THE REMOVAL AND REPLACEMENT OF A POST WITHOUT DAMAGING THE TOP WIRE.

WIRE TIES MAY BE 9 GAGE GALVANIZED STEEL OR 0.179" MIN. ALUMINUM ALLOY CONFORMING TO A.S.T.M. B211, ALLOY 1100-H18. USE 12½GAGE GALVANIZED HOG RINGS FOR TENSION WIRE TIES.

~~ALL MATERIAL IN THE CONCRETE BASE AND END POST IS INCLUDED IN THE SUPERSTRUCTURE QUANTITIES.~~

SEE SPECIAL PROVISIONS FOR REQUIREMENTS NOT INCLUDED ON THIS SHEET ~~AND FOR BASIS OF PAYMENT.~~

(1) PROVIDE PIPE SLEEVE IN SPAN BETWEEN THE VERTICAL POSTS AT EXPANSION JOINT. SEE SUPERSTRUCTURE SHEETS FOR LOCATION.

REVISED: 04-17-2013

APPROVED: DECEMBER 18, 2003

STATE BRIDGE ENGINEER

CERTIFIED BY _____ LICENSED PROFESSIONAL ENGINEER 8/21/15 DATE

NAME: LIC. NO.

TITLE: WIRE FENCE Ⓐ (DIAMOND MESH SAFETY RAIL)

DRAFT-WORK IN PROCESS

FIG. 5-397.119 (MOD.)

DES: CAD	DR: AMC	APPROVED:
CHK: LKZ	CHK: MTC	

SHEET NO. 46 OF 60 SHEETS

BRIDGE NO. R0692

Jan. 13 2016 04:04 pm V:\3400_ADC\CAD\SEGMENT E2\PLAN SHEETS\STRUCTURES\CLRT-TRL\CBRR0692-BRG-RAL-001.dwg By: Caitlyn.Deutsch

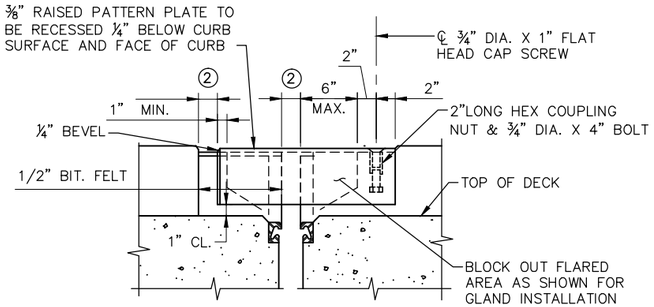

CURB DETAILS

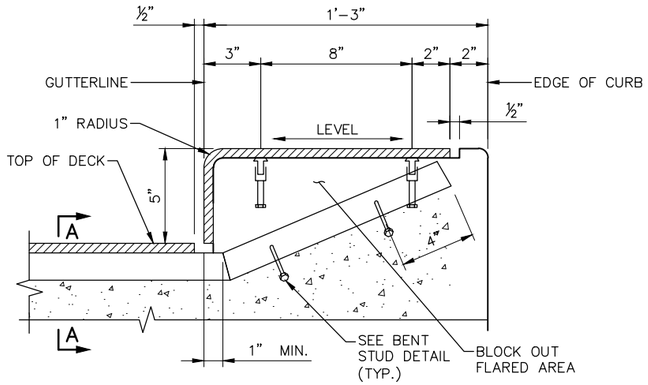

CURB SECTION

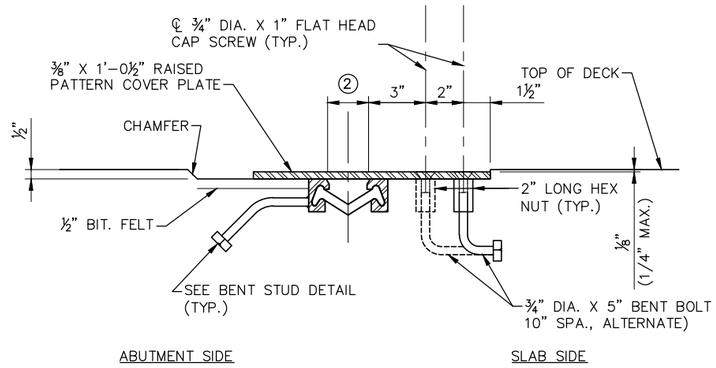

SECTION A–A

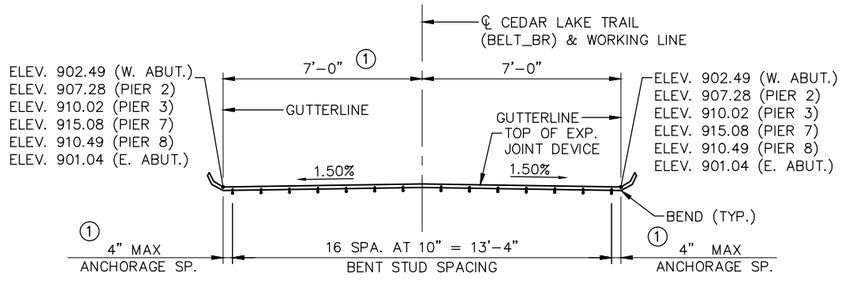

ALONG CENTERLINE OF JOINT

ELEVATIONS SHOWN ARE ½" BELOW TOP OF SLAB ALONG ℄ JOINT

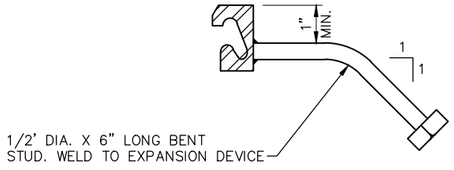

BENT STUD DETAIL

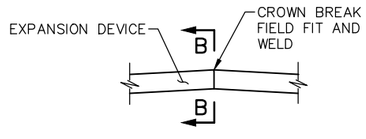

CROWN BREAK DETAIL

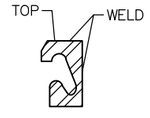

SECTION B–B

NOTES:

GALVANIZE STRUCTURAL STEEL AFTER FABRICATION AS PER MnDOT SPEC. 3394. GALVANIZE FASTENERS AS PER MnDOT SPEC. 3392.

JOINTS IN EXTRUSION SHALL BE LOCATED AT BREAKS IN TRANSVERSE PROFILE AND AS OTHERWISE REQUIRED. JOINTS SHALL BE CLOSE FIT AND WELDED. REPAIR AFTER WELDING AS PER MnDOT SPEC. 2471.3.L.

STRUCTURAL STEEL SHALL COMPLY WITH MnDOT SPEC. 3306 OR MnDOT SPEC. 3309.

EXPANSION DEVICE SHALL BE STRAIGHTENED TO A TOLERANCE OF ⅛" IN 10 FT.

CAP SCREWS SHALL BE COUNTERSUNK 1/16" BELOW TOP OF PLATE.

TRANSVERSE DECK REINFORCEMENT MAY BE SHIFTED THE MINIMUM DISTANCE REQUIRED FOR THE EXPANSION DEVICE.

SEE "CORNER DETAILS" SHEET FOR LAYOUT INFORMATION.

① DIMENSIONS ARE ALONG CENTERLINE OF JOINT.

② 2" AT ALL TEMPERATURES

NO.	DATE	BY	CHECK	DESIGN	REVISION / SUBMITTAL

DESIGNED BY: CAD | CHECKED BY: MTC
DRAWN BY: AMC | CHECKED BY: LKZ

AECOM Kimley»Horn

90% SUBMISSION - 01/22/16

METROPOLITAN COUNCIL

SOUTHWEST Green Line LRT Extension

CIVIL - VOLUME 4F
CEDAR LAKE TRAIL - BELTLINE STATION
BRIDGE R0692 (TRL)
WATERPROOF EXPANSION DEVICE

DISCIPLINE: STRUCTURES
SHEET NAME: CBRR0692-BRG-DTL-001

SHEET 47 OF 60

Jan, 13 2016 04:04 pm V:\3400_ADC\CAD\SEGMENT E2\PLAN SHEETS\STRUCTURES\CLRT-TRL\CBRR0692-BRG-DTL-001.dwg By: Caitlyn.Deutsch

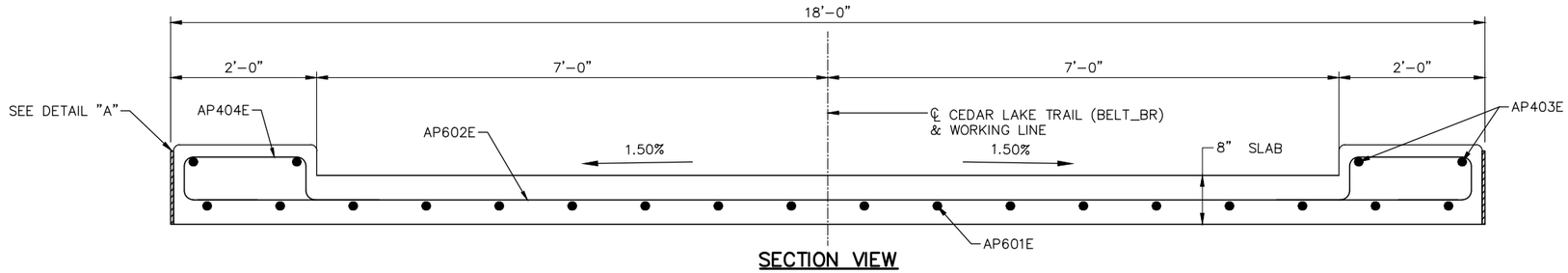

SECTION VIEW

BILL OF REINFORCEMENT FOR APPROACH PANEL				
BAR	NO.	LENGTH	SHAPE	LOCATION
AP601E	18	5'-4"	STR.	LONGITUDINAL
AP602E	13	17'-3"	STR.	TRANSVERSE
AP403E	4	5'-4"	STR.	CURB LONGITUDINAL
AP404E	14	4'-6"	BENT	CURB VERTICAL

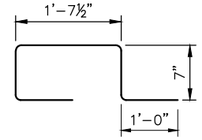

AP404E

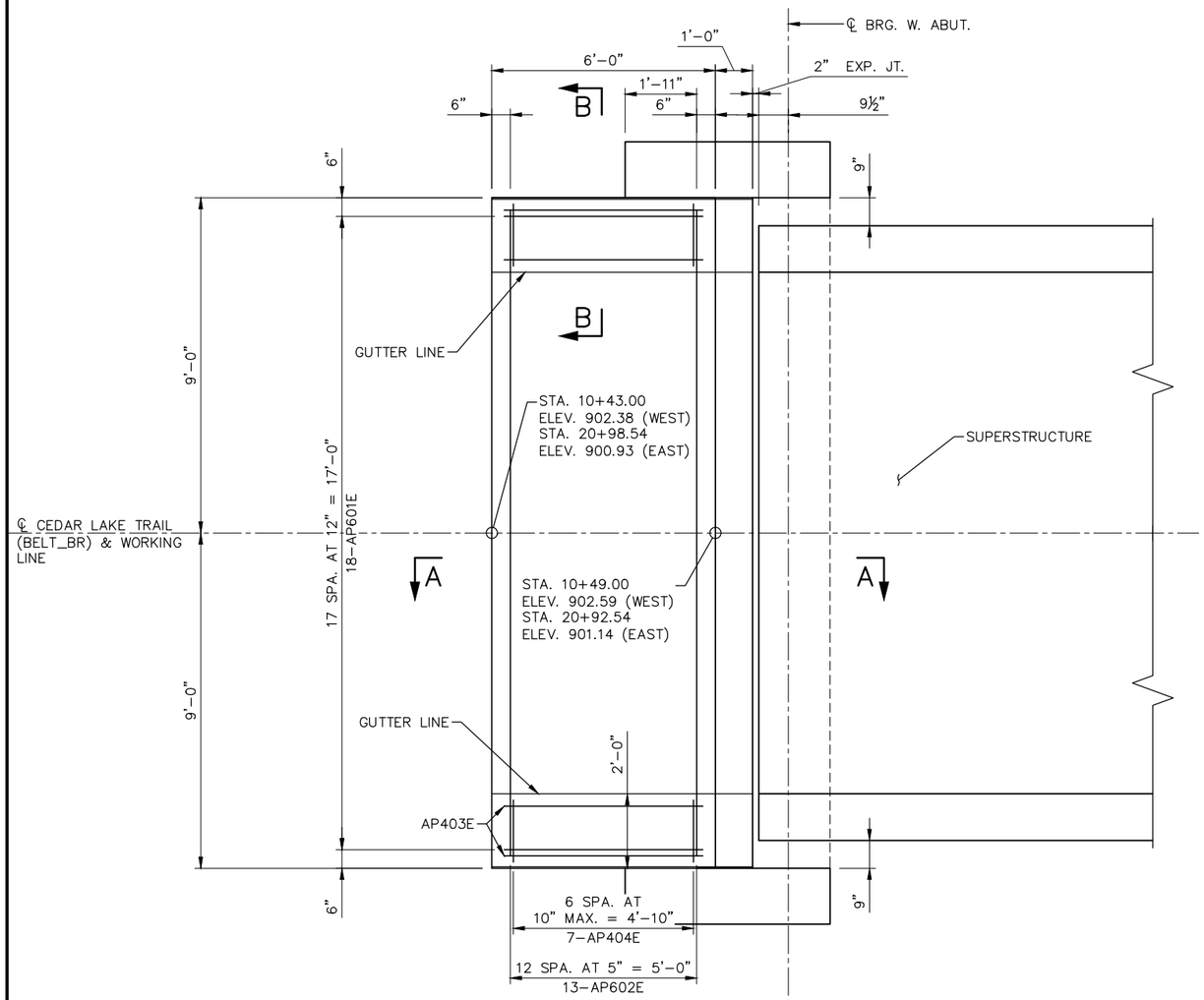

WEST ABUTMENT PLAN
(EAST ABUTMENT SIMILAR)

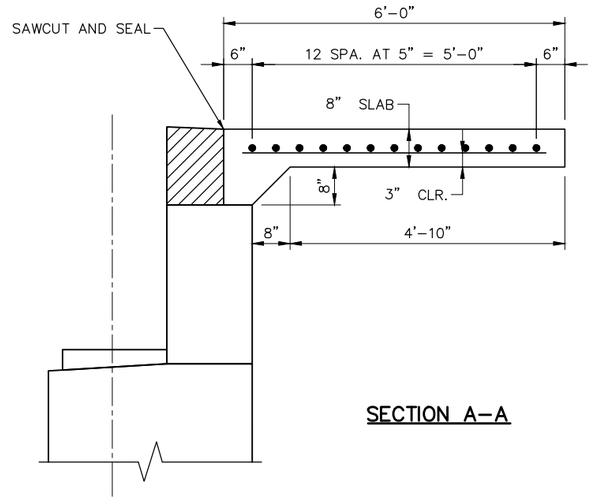

SECTION A-A

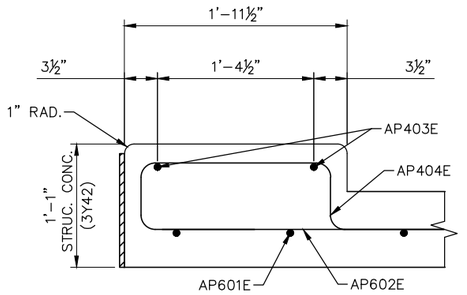

SECTION B-B

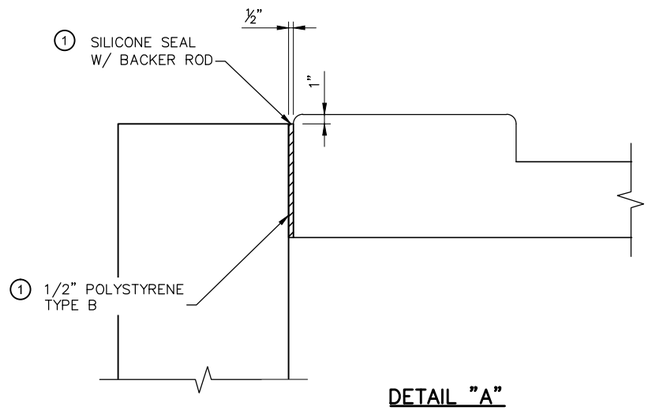

DETAIL "A"

NOTES:

APPROACH SLAB CONCRETE IS INCIDENTAL TO STRUCTURAL CONCRETE (3Y42).

REINFORCEMENT SHALL BE A.S.T.M. GRADE 60 AND EPOXY COATED PER SPEC. 3301

(1) BACKER ROD, POLYSTYRENE SHALL BE LOCATED BETWEEN WALLS AND APPROACH PANELS.

NO.	DATE	BY	CHECK	DESIGN	REVISION / SUBMITTAL

DESIGNED BY: CAD | CHECKED BY: MTC
DRAWN BY: AMC | CHECKED BY: LKZ

AECOM Kimley»Horn

90% SUBMISSION - 01/22/16

METROPOLITAN COUNCIL

SOUTHWEST Green Line LRT Extension

CIVIL - VOLUME 4F
CEDAR LAKE TRAIL - BELTLINE STATION
BRIDGE R0692 (TRL)
APPROACH PANEL DETAILS

DISCIPLINE: STRUCTURES
SHEET NAME: CBRR0692-BRG-APCH-001

SHEET 48 OF 60

Jan, 13 2016 04:05 pm V:\3400_ADC\CAD\SEGMENT E2\PLAN SHEETS\STRUCTURES\CLRT-TRL\CBRR0692-BRG-APCH-001.dwg By: Caitlyn.Deutsch

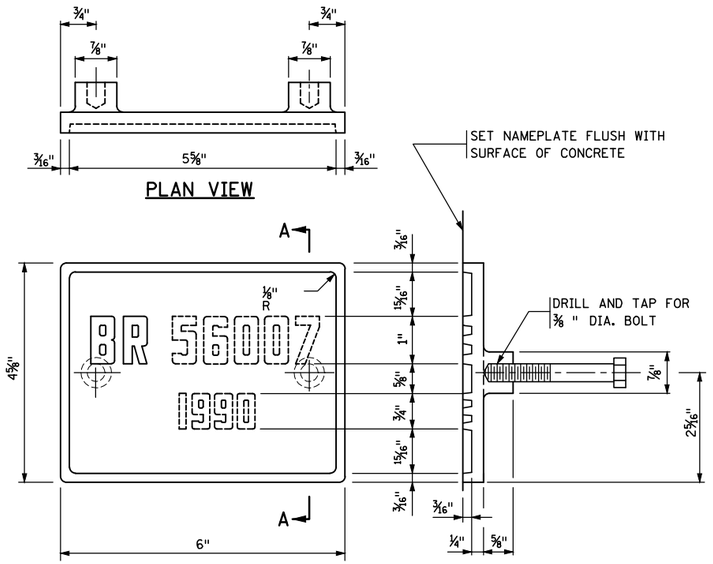

THE DASHED NUMBERS SHOWN ABOVE ARE FOR ILLUSTRATION.
DATA TO BE SHOWN ON NAMEPLATE IS AS FOLLOWS:

BRIDGE R0687

YEAR (1)

NUMBERS FOR NAMEPLATE

NOTES:

MATERIAL SHALL COMPLY WITH SPEC. 3327.

LETTERS AND NUMBERS SHALL CONFORM TO THOSE SHOWN.

DRAFT ON LETTERS AND NUMBERS SHALL NOT BE MORE THAN 3" IN 12".

HORIZONTAL SPACING OF LETTERS AND NUMBERS SHALL PRODUCE A BALANCED LAYOUT IN PROPORTION TO SPACING SHOWN.

TOP SURFACE OF LETTERS, NUMBERS AND FRAMES SHALL BE BURNISHED.

FURNISH 2 STEEL BOLTS ⅜ " DIA. x 3" LONG WITH EACH PLATE.

ALL DIMENSIONS FOR ¾" HIGH LETTERS AND NUMBERS SHALL BE IN DIRECT PROPORTION TO THOSE SHOWN FOR THE 1" HIGH LETTERS AND NUMBERS.

(1) YEAR OF CONSTRUCTION

APPROVED: NOVEMBER 22, 2002	STATE OF MINNESOTA DEPARTMENT OF TRANSPORTATION	REVISION 09-11-2014	DETAIL NO.
Daniel J. Morgan STATE BRIDGE ENGINEER	BRIDGE NAMEPLATE (FOR NEW BRIDGES)		B101

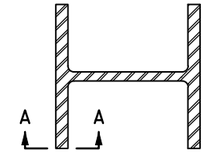

SECTION AT SPLICE

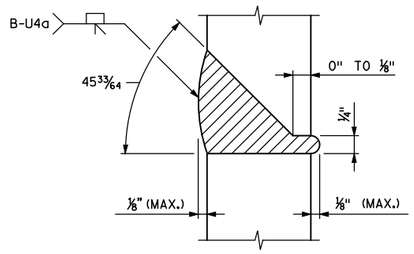

SECTION A-A

100% BUTT WELDED PILE SPLICE

NOTES:

CELLULOSIC TYPE ELECTRODES E-6010 OR E-6011 SHALL BE USED FOR 100% BUTT WELDED SPLICES.

ELECTRODES WHICH HAVE BECOME WET, SOILED OR DAMAGED SHALL NOT BE USED.

WELDING SHALL NOT BE DONE WHEN THE AMBIENT TEMPERATURE IS LOWER THAN 0 33⁄64 F. OR WHEN THE PILE IS WET OR EXPOSED TO FALLING RAIN OR SNOW. WHEN THE PILE METAL TEMPERATURE IS BELOW 32 33⁄64 F., THE PILE METAL IN THE AREA OF THE WELD SHALL BE HEATED TO A MINIMUM TEMPERATURE OF 70 33⁄64 F. AND MAINTAINED AT THIS TEMPERATURE DURING WELDING.

APPROVED: NOVEMBER 22, 2002	STATE OF MINNESOTA DEPARTMENT OF TRANSPORTATION	REVISION: 11-06-2013	DETAIL NO.
Daniel J. Morgan STATE BRIDGE ENGINEER	PILE SPLICE (STEEL H BEARING PILES 10" TO 14")		B202

NO.	DATE	BY	CHECK	DESIGN	REVISION / SUBMITTAL

DESIGNED BY: CAD CHECKED BY: MTC
DRAWN BY: AMC CHECKED BY: LKZ

AECOM Kimley»Horn

90% SUBMISSION - 01/22/16

METROPOLITAN COUNCIL

SOUTHWEST Green Line LRT Extension

CIVIL - VOLUME 4F
CEDAR LAKE TRAIL - BELTLINE STATION
BRIDGE R0692 (TRL)
BRIDGE DETAILS

DISCIPLINE: STRUCTURES
SHEET NAME: CBRR0692-BRG-DTL-002

SHEET 49 OF 60

Jan. 13 2016 04:05 pm V:\3400_ADC\CAD\SEGMENT E2\PLAN SHEETS\STRUCTURES\CLRT-TRL\CBRR0692-BRG-DTL-002.dwg By: Caitlyn.Deutsch

CONCRETE WEARING COURSE

☐ LOW SLUMP

☐ OTHER _____
TYPE OR MANUFACTURER

EXPANSION JOINTS

JOINT MANUFACTURER

MANUFACTURER'S IDENTIFICATION _____
MFR'S No. AND/OR LETTER DESIGNATION FOR JOINT USED

GLAND MANUFACTURER _____
NAME AND ADDRESS (CITY, STATE)

SIZE OF GLAND _____

MANUFACTURER'S IDENTIFICATION _____
MFR'S No. AND/OR LETTER DESIGNATION FOR GLAND USED

ELASTOMERIC BEARING PADS

PAD MANUFACTURER _____
NAME AND ADDRESS (CITY, STATE)

SPECIAL SURFACE FINISH

SYSTEM: _____ COLOR: _____

FINISHING ROADWAY FACES OF BARRIER RAILING

TYPE: _____ COLOR: _____

ANTI-GRAFFITI COATING

MANUFACTURER _____
NAME AND ADDRESS (CITY, STATE)

PRODUCT NAME: _____ LOCATION: _____

PAINT SYSTEM

Mn/DOT SPECIFICATION NUMBER _____
2478 OR 2479 OR OTHER

MANUFACTURER _____
NAME AND ADDRESS (CITY, STATE)

PRIME COAT _____
Mn/DOT MATERIAL SPECIFICATION NUMBER

INTERMEDIATE COAT _____
Mn/DOT MATERIAL SPECIFICATION NUMBER

FINISH COAT _____ _____
Mn/DOT MATERIAL SPECIFICATION NUMBER COLOR

PLAN QUALITY

RATE 1 (AGREE), 2 (NEUTRAL), OR 3 (DISAGREE, PLEASE COMMENT BELOW)

DIMENSIONING AND DETAILING ADEQUATELY DESCRIBED REQUIRED CONSTRUCTION. _____
BAR LISTS AND QUANTITIES WERE TYPICALLY COMPLETE AND FREE OF ERRORS. _____
SCALE OF DRAWINGS AND OVERALL LEGIBILITY OF LINES AND TEXT WAS GOOD. _____
(SB) SPECIAL PROVISIONS ADEQUATELY DESCRIBED SPECIAL WORK AND PAYMENT. _____

COMMENTS: _____

NUMBER OF BRIDGE
SUPPLEMENTAL AGREEMENTS: _____ COST: $ _____

LIST SIGNIFICANT ERRORS OR OMISSIONS IN PLAN DETAILS OR PAY QUANTITIES IN THE SPACE PROVIDED AT RIGHT.

BRIDGE REMOVAL / BRIDGE OPENING

NUMBER OF AND DATE OLD BRIDGE WAS REMOVED (IF APPLICABLE):

BRIDGE NUMBER _____ DATE REMOVED _____

DATE NEW BRIDGE WAS OPENED TO TRAFFIC _____

NOTIFY THE BRIDGE OFFICE BRIDGE MANAGEMENT UNIT WITH THIS INFORMATION AS SOON AS POSSIBLE. (651) 366-4557

OTHER ITEMS ①

① UTILITIES ADDED DURING CONSTRUCTION AND SPECIALTY ITEMS.

FINAL QUANTITIES ENTERED ON SCHEDULE OF QUANTITIES: YES ☐ NO ☐

SUMMARY OF SIGNIFICANT AS-BUILT CHANGES

THE AS-BUILT INFORMATION WAS ADDED TO THE PLAN BY:

_____ _____
INSPECTOR(S) SIGNATURE DATE

CHECKED BY: _____ _____
PROJECT ENGINEER/SUPERVISOR SIGNATURE DATE

AT THE TIME OF THE FINAL, THIS COMPLETED AS-BUILT BRIDGE DATA SHEET MUST BE SUBMITTED TO THE BRIDGE OFFICE - ATTN: REGIONAL CONSTRUCTION ENGINEER (MS610).

REVISION: 10-28-2008

APPROVED: SEPTEMBER 26, 2003
Daniel T. Hogan
STATE BRIDGE ENGINEER

AS-BUILT DETAILS
(AS NEEDED)

FIG. 5-397.900

TITLE: AS-BUILT BRIDGE DATA

DES:	DR:	APPROVED:	BRIDGE NO.
CHK:	CHK:		R0692

SHEET NO. 50 OF 56 SHEETS

CONTRACTED PROFILE

SCALE HOR: 0 50'

SCALE VER: 0 10'

PROFILE GRADE CEDAR LAKE TRAIL (CEDAR LAKE LRT TRAIL)

(13) VERTICAL STATIONS AND ELEVATIONS ARE ALONG (CEDAR LAKE LRT TRAIL) ALIGNMENT. SEE SHEET 1 FOR (BELT_BR) ALIGNMENT.

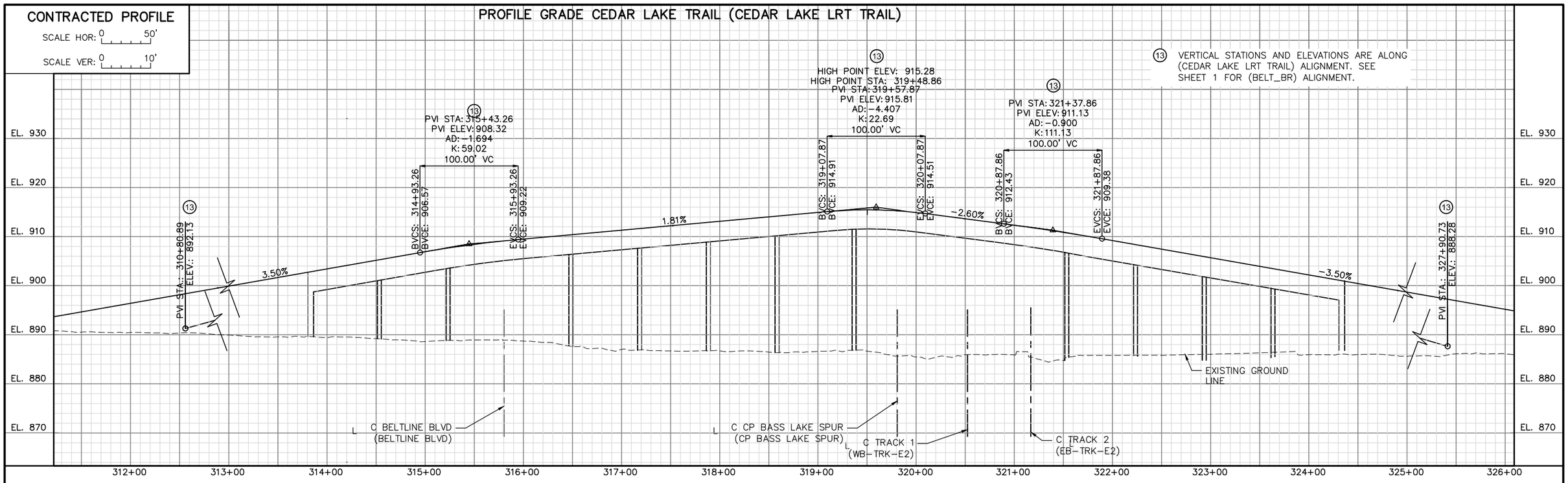

PLAT

SCALE: 0 50'

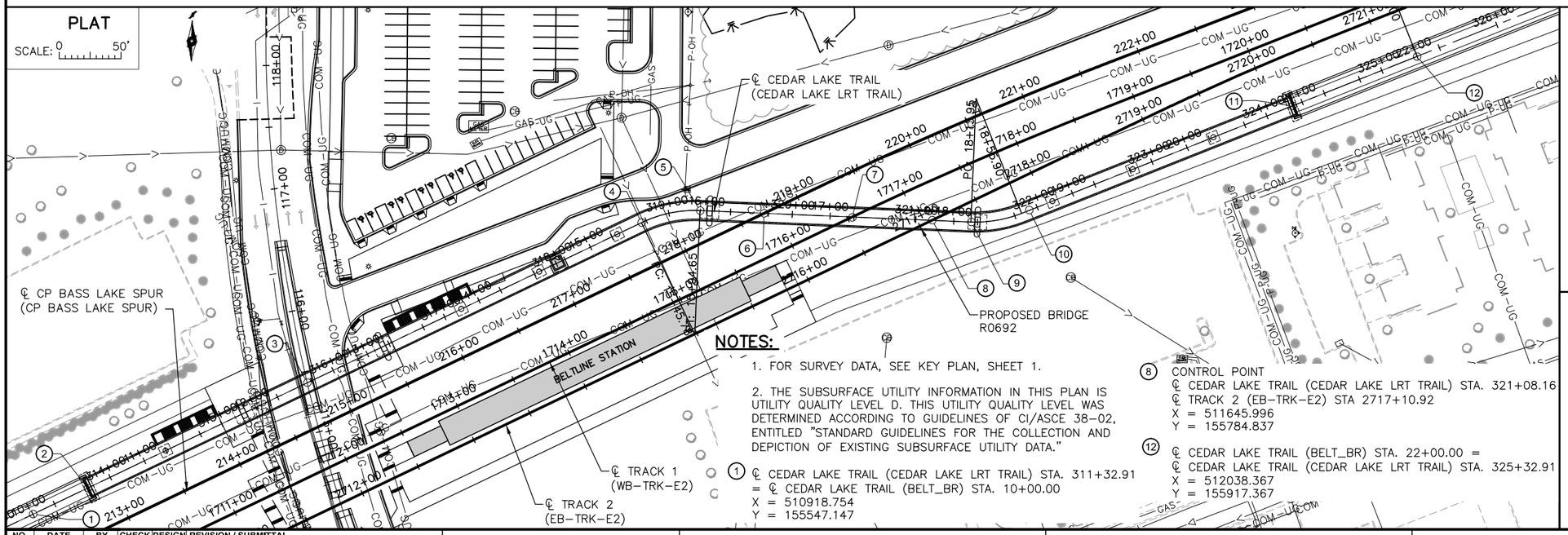

NOTES:

1. FOR SURVEY DATA, SEE KEY PLAN, SHEET 1.
2. THE SUBSURFACE UTILITY INFORMATION IN THIS PLAN IS UTILITY QUALITY LEVEL D. THIS UTILITY QUALITY LEVEL WAS DETERMINED ACCORDING TO GUIDELINES OF CI/ASCE 38−02, ENTITLED "STANDARD GUIDELINES FOR THE COLLECTION AND DEPICTION OF EXISTING SUBSURFACE UTILITY DATA."

(1) ℄ CEDAR LAKE TRAIL (CEDAR LAKE LRT TRAIL) STA. 311+32.91 = ℄ CEDAR LAKE TRAIL (BELT_BR) STA. 10+00.00
X = 510918.754
Y = 155547.147

(8) CONTROL POINT
℄ CEDAR LAKE TRAIL (CEDAR LAKE LRT TRAIL) STA. 321+08.16
℄ TRACK 2 (EB−TRK−E2) STA 2717+10.92
X = 511645.996
Y = 155784.837

(12) ℄ CEDAR LAKE TRAIL (BELT_BR) STA. 22+00.00 = ℄ CEDAR LAKE TRAIL (CEDAR LAKE LRT TRAIL) STA. 325+32.91
X = 512038.367
Y = 155917.367

PROPOSED BRIDGE R0692

INDEX MAP

R 21W

T 117N

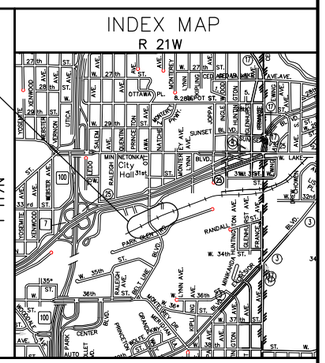

BRIDGE SURVEY 1

PROPOSED BRIDGE LOCATED 0.3 MILES SOUTH OF JCT. CSAH 5 AND BELTLINE BLVD. IN ST LOUIS PARK

CEDAR LAKE TRAIL OVER BELTLINE ROAD, CANADIAN PACIFIC RAILWAY, AND SOUTHWEST LRT

SEC 19 T 117N R 21W

CITY OF ST LOUIS PARK HENNEPIN COUNTY

BRIDGE R0692

NO.	DATE	BY	CHECK	DESIGN	REVISION / SUBMITTAL

AECOM Kimley»Horn

DESIGNED BY:	CAD	CHECKED BY:	LKZ
DRAWN BY:	AMC	CHECKED BY:	MTC

90% SUBMISSION - 01/22/16

METROPOLITAN COUNCIL

SOUTHWEST Green Line LRT Extension

CIVIL - VOLUME 4F
CEDAR LAKE TRAIL - BELTLINE STATION
BRIDGE R0692 (TRL)
BRIDGE SURVEY 1

DISCIPLINE: STRUCTURES

SHEET NAME: CBRR0692-BRG-SUR-001

SHEET 51 OF 60

Jan, 13 2016 04:10 pm V:\3400_ADC\CAD\SEGMENT E2\PLAN SHEETS\STRUCTURES\CLRT-TRL\CBRR0692-BRG-SUR.dwg By: Caitlyn.Deutsch

PROFILE GRADE CP BASS LAKE SPUR (CP BASS LAKE SPUR)

CONTRACTED PROFILE
SCALE HOR: 0 50'
SCALE VER: 0 10'

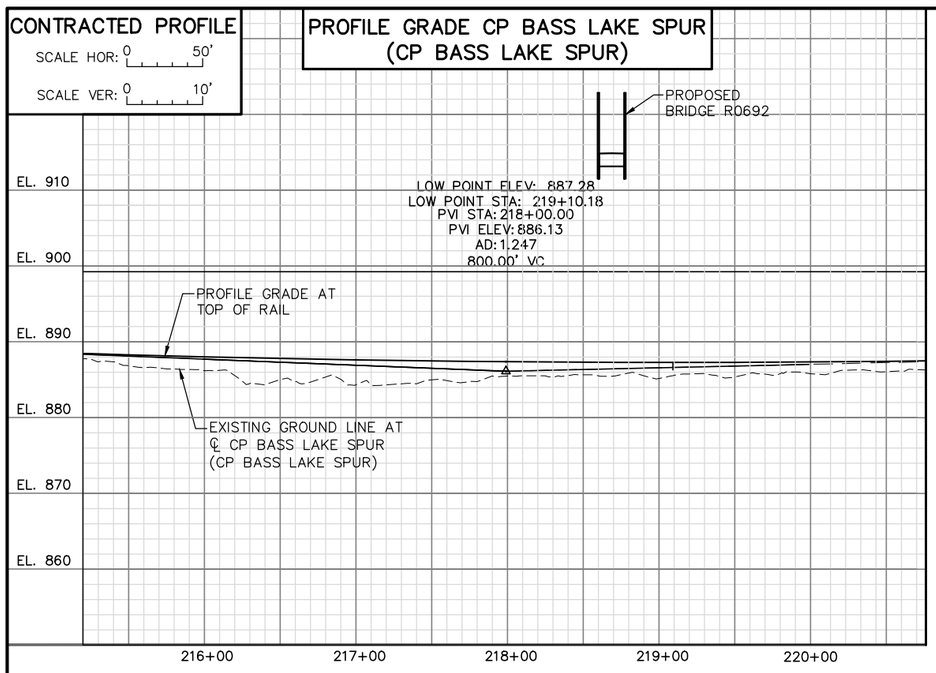

PROFILE GRADE TRACK 1 (WB–TRK–E2)

CONTRACTED PROFILE
SCALE HOR: 0 50'
SCALE VER: 0 10'

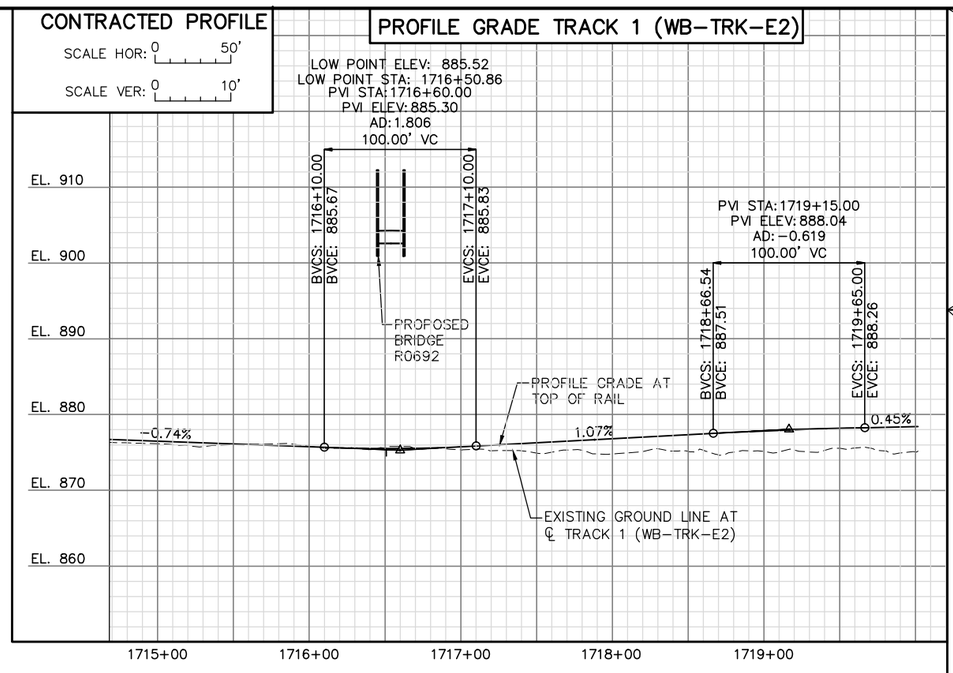

PROFILE GRADE TRACK 2 (EB–TRK–E2)

CONTRACTED PROFILE
SCALE HOR: 0 50'
SCALE VER: 0 10'

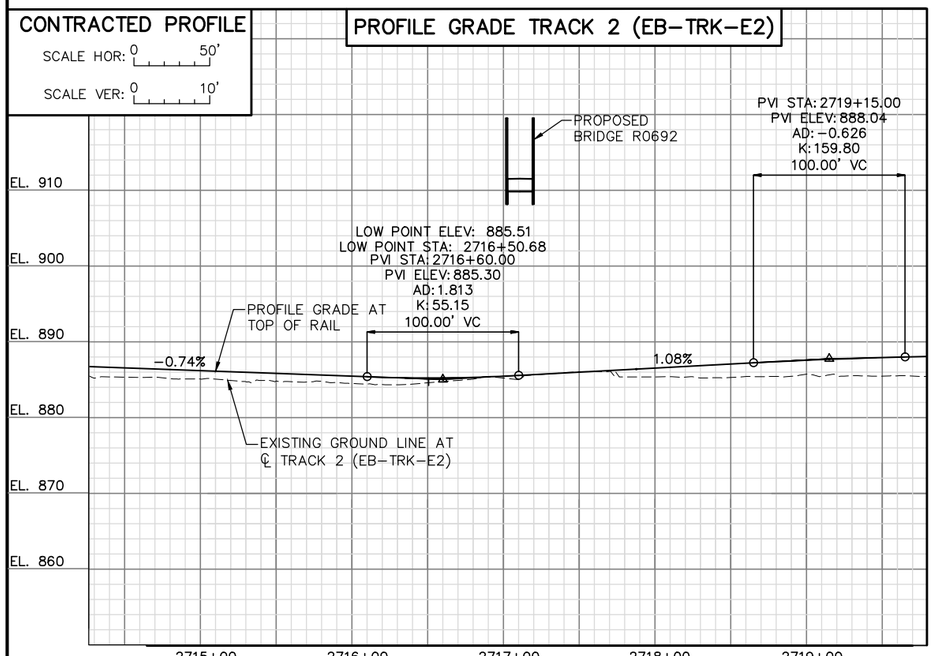

PROFILE GRADE BELTLINE BLVD. (BELTLINE BLVD.)

CONTRACTED PROFILE
SCALE HOR: 0 50'
SCALE VER: 0 10'

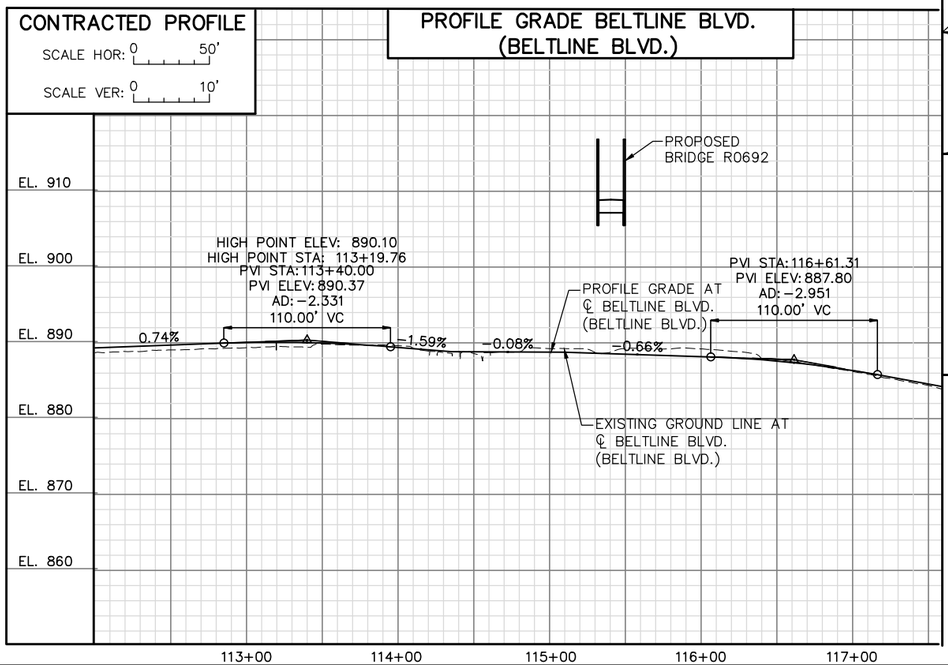

LOCATION ENGINEER'S OBSERVATIONS AT BRIDGE SITE

1. SPECIAL FEATURES: WATERFALLS, DAMS, FLOODS, ICE, DEBRIS SLIDING BANKS, RECREATIONAL BOATING.
2. OTHER BRIDGES OR CULVERTS OVER THE SAME STREAM (PARTICULARY STRUCTURES WHICH CARRY HIGH WATER WITHOUT OVERFLOW OF ROADWAY): GIVEN LOCATION, TYPE, LENGTH, HEIGHT ABOVE HIGH WATER, CROSS–SECTIONAL AREA ETC.
3. APPARENT HIGHWATER ELEVATION OBTAINED FROM:
4. OTHER DATA: APPROX. VELOCITY OF WATER AT TIME OF SURVEY.

HYDRAULIC ENGINEER'S RECOMMENDATION

DATE:

STREAM OR DITCH DESIGNATION

DRAINAGE AREA

MAX FLOOD ON RECORD

DESIGN FLOOD (YR. FREQ.): C.F.S.
HEADWATER ELEVATION: FT.
DESIGN MEAN VELOCITY THROUGH STRUCTURE F.P.S.
TOTAL STAGE INCREASE FT.
LOW MEMBER AT OR ABOVE ELEVATION FT.

WATERWAY AREA REQUIRED BELOW ELEV. = SQ. FT.
AT RIGHT ANGLES TO CHANNEL

BASIC FLOOD (100 YR. FREQ.) C.F.S.
HEADWATER ELEVATION: FT.
TOTAL STAGE INCREASE FT.
MEAN VELOCITY THROUGH STRUCTURE

FLOWLINE ELEVATION: FT. SKEW ANGLE:

ESTIMATED PRLIMINARY TOTAL SCOUR AT PIER EL. (500 OR OT YR. FREQ.)

SCOUR CONFIRMATION RECOMMENDATION

DATE:

TOTAL SCOUR AT PIER EL. (500 OR OT YR. FREQ.)
SCOUR CODE: OBTAIN FROM HYDRAULIC ENGINEER

BRIDGE SURVEY SHEETS MADE FROM 2014 MFRA SURVEYS

1ST BENCH MARK
ELEVATION: 887.43
NORTHING: 156091.81
EASTING: 512264.50
DESCRIPTION: MAG NAIL IN BIT. PATH

2ND BENCH MARK
ELEVATION: 887.63
NORTHING: 156137.69
EASTING: 512537.72
DESCRIPTION: ROD INSIDE 2" PIPE

NO.	DATE	BY	CHECK	DESIGN	REVISION / SUBMITTAL

DESIGNED BY: CAD | CHECKED BY: LKZ
DRAWN BY: AMC | CHECKED BY: MTC

AECOM Kimley»Horn

90% SUBMISSION - 01/22/16

METROPOLITAN COUNCIL

SOUTHWEST Green Line LRT Extension

CIVIL - VOLUME 4F
CEDAR LAKE TRAIL - BELTLINE STATION
BRIDGE R0692 (TRL)
BRIDGE SURVEY 2

DISCIPLINE: STRUCTURES
SHEET NAME: CBRR0692-BRG-SUR-002

SHEET 52 OF 60

Jan, 13 2016 04:10 pm V:\3400_ADC\CAD\SEGMENT E2\PLAN SHEETS\STRUCTURES\CLRT–TRL\CBRR0692–BRG–SUR.dwg By: Caitlyn.Deutsch

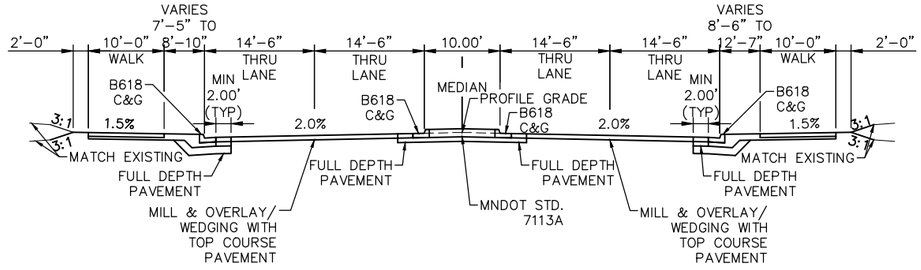

TYPICAL SECTION–BELTLINE BLVD

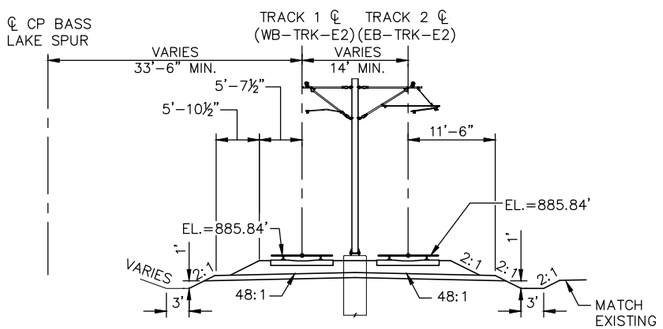

TYPICAL APPROACH SECTION–LRT

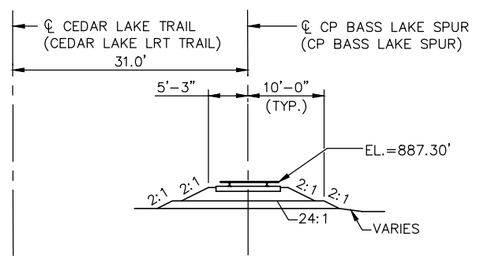

TYPICAL SECTION–CP BASS LAKE SPUR

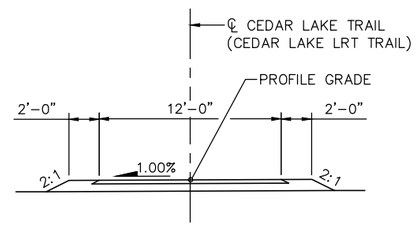

TYPICAL SECTION–CEDAR LAKE TRAIL

LOCATION ENGINEER'S OBSERVATIONS AT BRIDGE SITE

1. SPECIAL FEATURES: WATERFALLS, DAMS, FLOODS, ICE, DEBRIS SLIDING BANKS, RECREATIONAL BOATING.
2. OTHER BRIDGES OR CULVERTS OVER THE SAME STREAM (PARTICULARY STRUCTURES WHICH CARRY HIGH WATER WITHOUT OVERFLOW OF ROADWAY): GIVEN LOCATION, TYPE, LENGTH, HEIGHT ABOVE HIGH WATER, CROSS–SECTIONAL AREA ETC.
3. APPARENT HIGHWATER ELEVATION OBTAINED FROM:
4. OTHER DATA: APPROX. VELOCITY OF WATER AT TIME OF SURVEY.

HYDRAULIC ENGINEER'S RECOMMENDATION

DATE:

STREAM OR DITCH DESIGNATION

DRAINAGE AREA

MAX FLOOD ON RECORD

DESIGN FLOOD (YR. FREQ.): C.F.S.
HEADWATER ELEVATION: FT.
DESIGN MEAN VELOCITY THROUGH STRUCTURE F.P.S.
TOTAL STAGE INCREASE FT.
LOW MEMBER AT OR ABOVE ELEVATION FT.

WATERWAY AREA REQUIRED BELOW ELEV. = SQ. FT.
AT RIGHT ANGLES TO CHANNEL

BASIC FLOOD (100 YR. FREQ.) C.F.S.
HEADWATER ELEVATION: FT.
TOTAL STAGE INCREASE FT.
MEAN VELOCITY THROUGH STRUCTURE

FLOWLINE ELEVATION: FT. SKEW ANGLE:

ESTIMATED PRLIMINARY TOTAL SCOUR AT PIER EL.
(500 OR OT YR. FREQ.)

SCOUR CONFIRMATION RECOMMENDATION

DATE:

TOTAL SCOUR AT PIER EL. (500 OR OT YR. FREQ.)
SCOUR CODE: OBTAIN FROM HYDRAULIC ENGINEER

BRIDGE SURVEY SHEETS MADE FROM 2014 MFRA SURVEYS

1ST BENCH MARK
ELEVATION: 887.43
NORTHING: 156091.81
EASTING: 512264.50
DESCRIPTION: MAG NAIL IN BIT. PATH

2ND BENCH MARK
ELEVATION: 887.63
NORTHING: 156137.69
EASTING: 512537.72
DESCRIPTION: ROD INSIDE 2" PIPE

NO.	DATE	BY	CHECK	DESIGN	REVISION / SUBMITTAL

DESIGNED BY: CAD | CHECKED BY: LKZ
DRAWN BY: AMC | CHECKED BY: MTC

AECOM Kimley»Horn

90% SUBMISSION - 01/22/16

METROPOLITAN COUNCIL

SOUTHWEST Green Line LRT Extension

CIVIL - VOLUME 4F
CEDAR LAKE TRAIL - BELTLINE STATION
BRIDGE R0692 (TRL)
BRIDGE SURVEY 3

DISCIPLINE: STRUCTURES
SHEET NAME: CBRR0692-BRG-SUR-003

SHEET 53 OF 60

Jan, 13 2016 04:11 pm v:\3400_ADC\CAD\SEGMENT E2\PLAN SHEETS\STRUCTURES\CLRT-TRL\CBRR0692-BRG-SUR.dwg By: Caitlyn.Deutsch

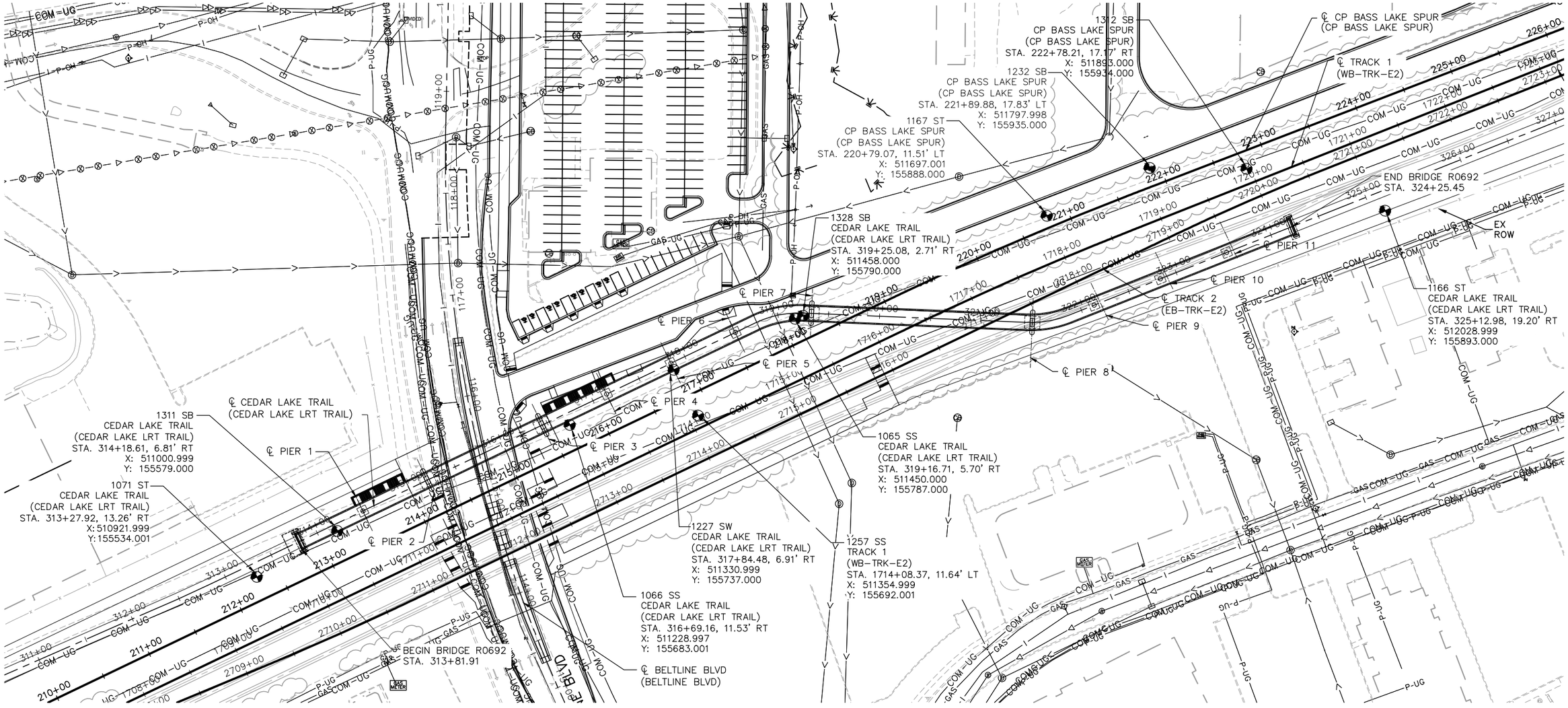

NOTES

1. THE SUBSURFACE UTILITY INFORMATION IN THIS PLAN IS UTILITY QUALITY LEVEL D. THIS UTILITY QUALITY LEVEL WAS DETERMINED ACCORDING TO GUIDELINES OF CI/ASCE 38-02, ENTITLED "STANDARD GUIDELINES FOR THE COLLECTION AND DEPICTION OF EXISTING SUBSURFACE UTILITY DATA"
2. FOR P.C. AND P.T., SEE KEY PLAN, SHEET 1

NO.	DATE	BY	CHECK	DESIGN	REVISION / SUBMITTAL

DESIGNED BY: CAD | CHECKED BY: LKZ
DRAWN BY: AMC | CHECKED BY: MTC

AECOM Kimley»Horn

90% SUBMISSION - 01/22/16

METROPOLITAN COUNCIL

SOUTHWEST Green Line LRT Extension

CIVIL - VOLUME 4F
CEDAR LAKE TRAIL - BELTLINE STATION
BRIDGE R0692 (TRL)
BRIDGE SURVEY PLAN

DISCIPLINE: STRUCTURES
SHEET NAME: CBRR0692-BRG-BOR-001

SHEET 54 OF 60

Jan, 13 2016 04:13 pm V:\3400_ADC\CAD\SEGMENT E2\PLAN SHEETS\STRUCTURES\CLRT-TRL\CBRR0692-BRG-BOR-001.dwg By: Caitlyn.Deutsch

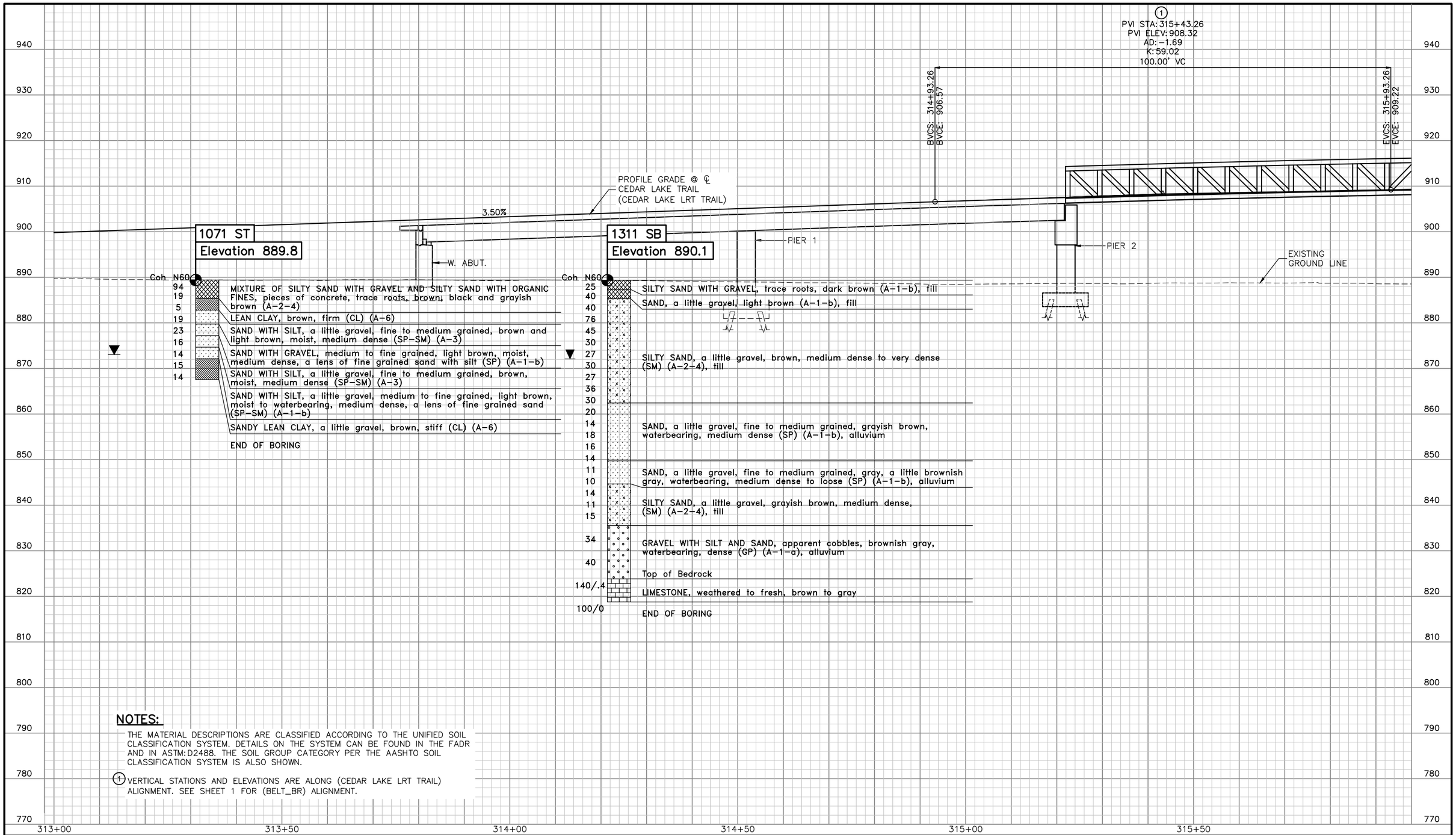

NOTES:

THE MATERIAL DESCRIPTIONS ARE CLASSIFIED ACCORDING TO THE UNIFIED SOIL CLASSIFICATION SYSTEM. DETAILS ON THE SYSTEM CAN BE FOUND IN THE FADR AND IN ASTM:D2488. THE SOIL GROUP CATEGORY PER THE AASHTO SOIL CLASSIFICATION SYSTEM IS ALSO SHOWN.

① VERTICAL STATIONS AND ELEVATIONS ARE ALONG (CEDAR LAKE LRT TRAIL) ALIGNMENT. SEE SHEET 1 FOR (BELT_BR) ALIGNMENT.

NO.	DATE	BY	CHECK	DESIGN	REVISION / SUBMITTAL

DESIGNED BY: CAD | CHECKED BY: LKZ
DRAWN BY: AMC | CHECKED BY: MTC

AECOM Kimley»Horn

90% SUBMISSION - 01/22/16

METROPOLITAN COUNCIL

SOUTHWEST Green Line LRT Extension

CIVIL - VOLUME 4F
CEDAR LAKE TRAIL - BELTLINE STATION
BRIDGE R0692 (TRL)
BRIDGE SURVEY PROFILE 1

DISCIPLINE: STRUCTURES

SHEET NAME: CBRR0692-BRG-BOR-002

SHEET 55 OF 60

Jan, 13 2016 04:14 pm V:\3400_ADC\CAD\SEGMENT E2\PLAN SHEETS\STRUCTURES\CLRT-TRL\CBRR0692-BRG-BOR.dwg By: Caitlyn.Deutsch

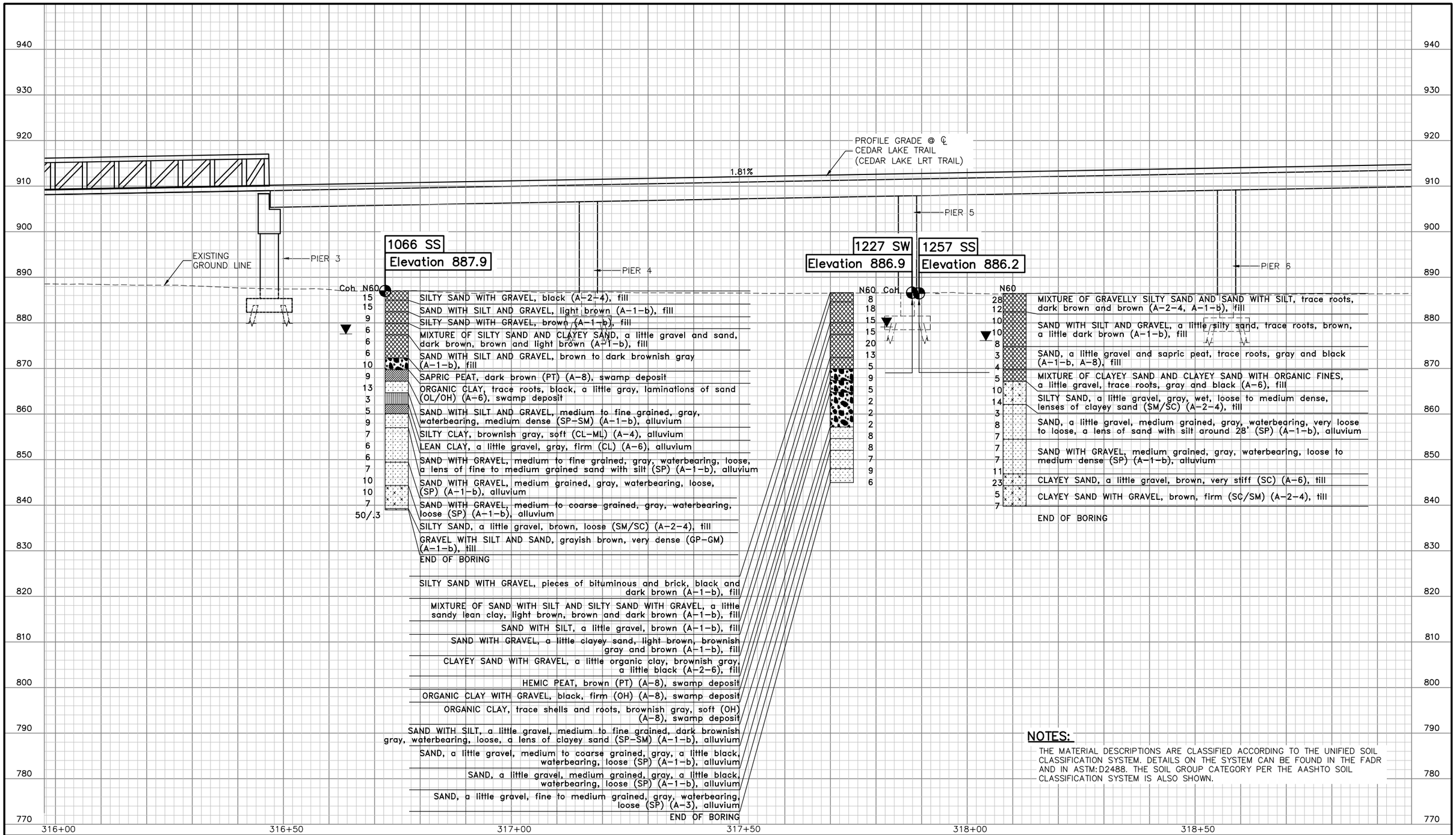

NOTES:

THE MATERIAL DESCRIPTIONS ARE CLASSIFIED ACCORDING TO THE UNIFIED SOIL CLASSIFICATION SYSTEM. DETAILS ON THE SYSTEM CAN BE FOUND IN THE FADR AND IN ASTM:D2488. THE SOIL GROUP CATEGORY PER THE AASHTO SOIL CLASSIFICATION SYSTEM IS ALSO SHOWN.

NO.	DATE	BY	CHECK	DESIGN	REVISION / SUBMITTAL

DESIGNED BY: CAD CHECKED BY: LKZ
DRAWN BY: AMC CHECKED BY: MTC

AECOM Kimley»Horn

90% SUBMISSION - 01/22/16

METROPOLITAN COUNCIL

SOUTHWEST Green Line LRT Extension

CIVIL - VOLUME 4F
CEDAR LAKE TRAIL - BELTLINE STATION
BRIDGE R0692 (TRL)
BRIDGE SURVEY PROFILE 2

DISCIPLINE: STRUCTURES

SHEET NAME: CBRR0692-BRG-BOR-003

SHEET 56 OF 60

Jan, 13 2016 04:14 pm V:\3400_ADC\CAD\SEGMENT E2\PLAN SHEETS\STRUCTURES\CLRT-TRL\CBRR0692-BRG-BOR.dwg By: Caitlyn.Deutsch

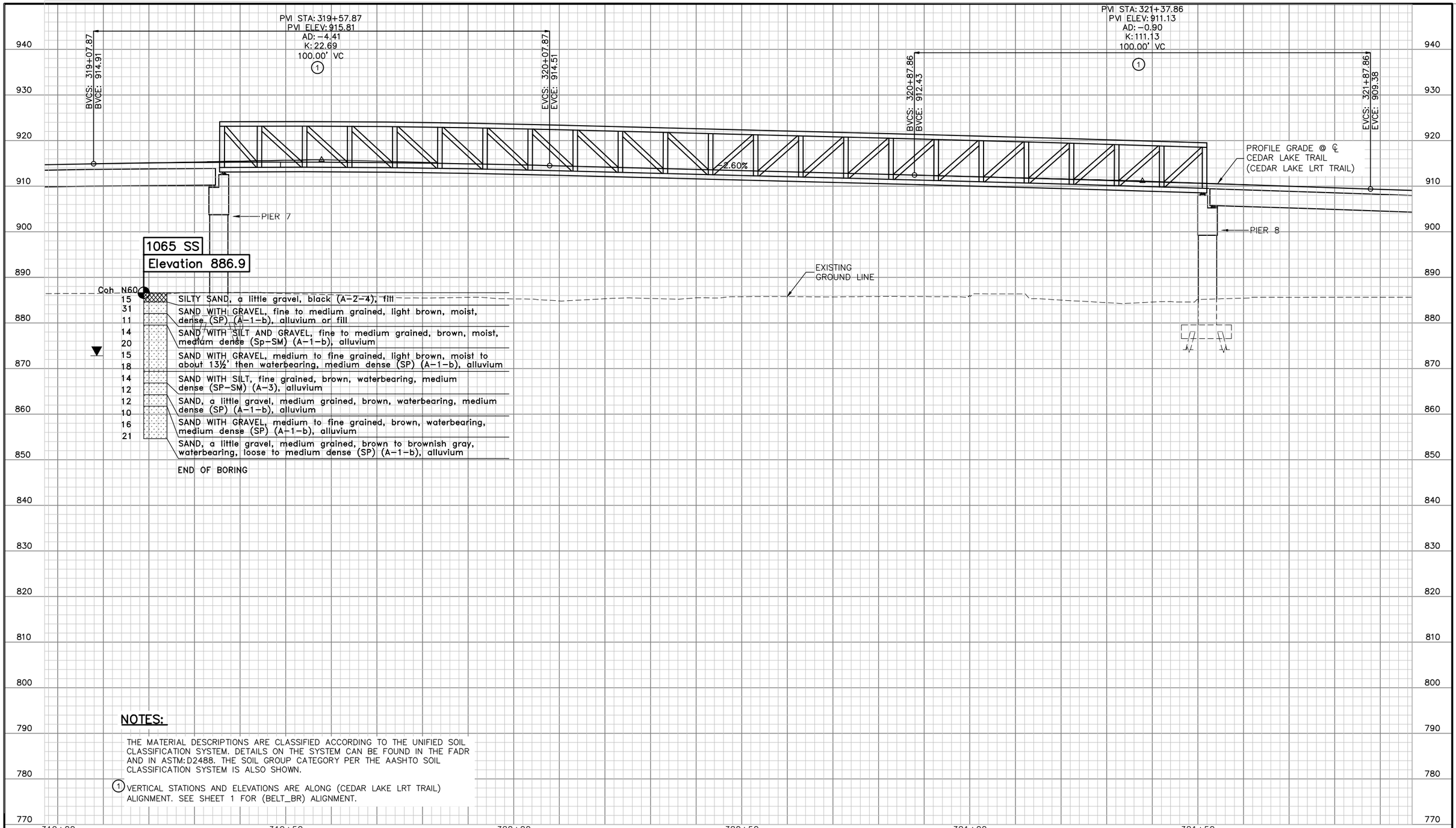

NOTES:

THE MATERIAL DESCRIPTIONS ARE CLASSIFIED ACCORDING TO THE UNIFIED SOIL CLASSIFICATION SYSTEM. DETAILS ON THE SYSTEM CAN BE FOUND IN THE FADR AND IN ASTM:D2488. THE SOIL GROUP CATEGORY PER THE AASHTO SOIL CLASSIFICATION SYSTEM IS ALSO SHOWN.

(1) VERTICAL STATIONS AND ELEVATIONS ARE ALONG (CEDAR LAKE LRT TRAIL) ALIGNMENT. SEE SHEET 1 FOR (BELT_BR) ALIGNMENT.

NO.	DATE	BY	CHECK	DESIGN	REVISION / SUBMITTAL

DESIGNED BY: CAD | CHECKED BY: LKZ
DRAWN BY: AMC | CHECKED BY: MTC

AECOM Kimley»Horn

90% SUBMISSION - 01/22/16

METROPOLITAN COUNCIL

SOUTHWEST Green Line LRT Extension

CIVIL - VOLUME 4F
CEDAR LAKE TRAIL - BELTLINE STATION
BRIDGE R0692 (TRL)
BRIDGE SURVEY PROFILE 3

DISCIPLINE: STRUCTURES

SHEET NAME: CBRR0692-BRG-BOR-004

SHEET 57 OF 60

Jan, 13 2016 04:14 pm V:\3400_ADC\CAD\SEGMENT E2\PLAN SHEETS\STRUCTURES\CLRT-TRL\CBRR0692-BRG-BOR.dwg By: Caitlyn.Deutsch

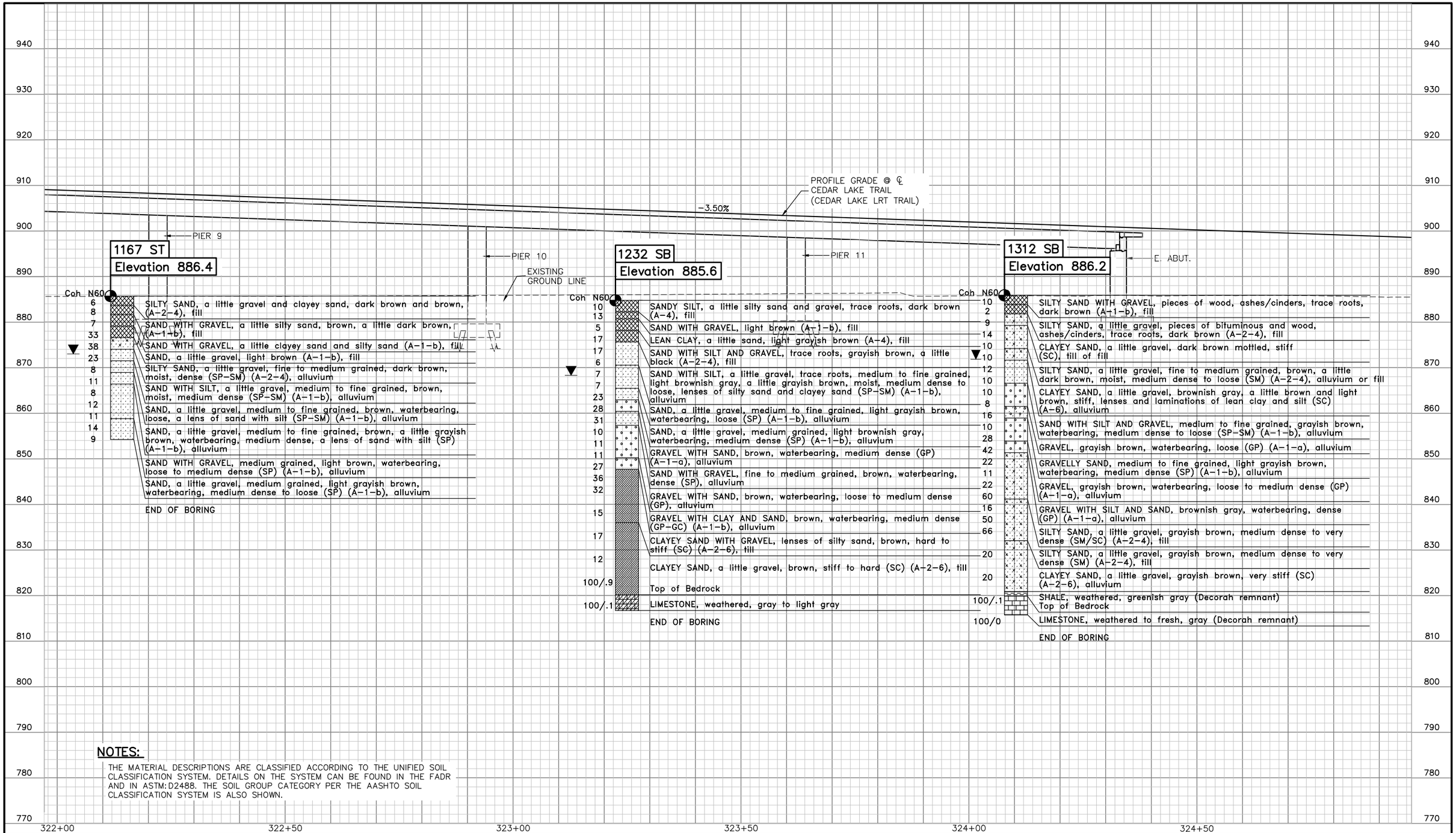

NOTES:

THE MATERIAL DESCRIPTIONS ARE CLASSIFIED ACCORDING TO THE UNIFIED SOIL CLASSIFICATION SYSTEM. DETAILS ON THE SYSTEM CAN BE FOUND IN THE FADR AND IN ASTM:D2488. THE SOIL GROUP CATEGORY PER THE AASHTO SOIL CLASSIFICATION SYSTEM IS ALSO SHOWN.

NO.	DATE	BY	CHECK	DESIGN	REVISION / SUBMITTAL

DESIGNED BY: CAD | CHECKED BY: LKZ
DRAWN BY: AMC | CHECKED BY: MTC

AECOM Kimley»Horn

90% SUBMISSION - 01/22/16

METROPOLITAN COUNCIL

SOUTHWEST Green Line LRT Extension

CIVIL - VOLUME 4F
CEDAR LAKE TRAIL - BELTLINE STATION
BRIDGE R0692 (TRL)
BRIDGE SURVEY PROFILE 4

DISCIPLINE: STRUCTURES

SHEET NAME: CBRR0692-BRG-BOR-005

SHEET 58 OF 60

Jan, 13 2016 04:14 pm V:\3400_ADC\CAD\SEGMENT E2\PLAN SHEETS\STRUCTURES\CLRT-TRL\CBRR0692-BRG-BOR.dwg By: Caitlyn.Deutsch

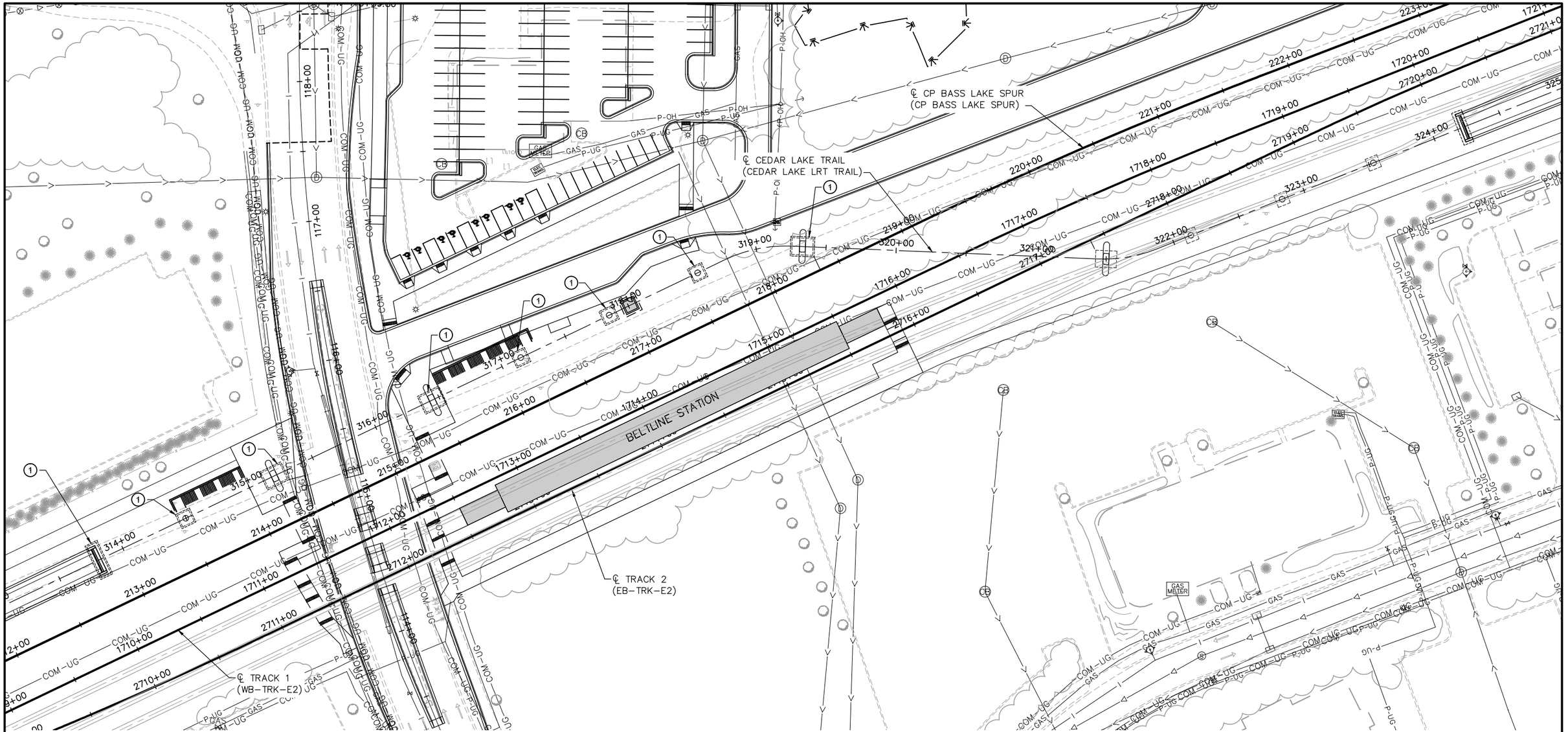

STAGING NOTES:

1. CONSTRUCT FOOTINGS FOR WEST ABUTMENT AND PIER 1 THROUGH PIER 7.
2. RELOCATE EXISTING CP BASS LAKE SPUR ALIGNMENT TO FINAL ALIGNMENT.

(1) SUPPORT OF EXCAVATION

STAGING REQUIREMENTS:

EXISTING FREIGHT SHALL BE KEPT OPEN FOR TRAIN USE DURING CONSTRUCTION EXCEPT WITH PRIOR APPROVAL.

CEDAR LAKE TRAIL SHALL BE KEPT OPEN FOR PUBLIC USE DURING CONSTRUCTION EXCEPT WITH PRIOR APPROVAL.

NO.	DATE	BY	CHECK	DESIGN	REVISION / SUBMITTAL

DESIGNED BY: CAD | CHECKED BY: MTC
DRAWN BY: AMC | CHECKED BY: LKZ

AECOM Kimley»Horn

90% SUBMISSION - 01/22/16

METROPOLITAN COUNCIL

SOUTHWEST Green Line LRT Extension

CIVIL - VOLUME 4F
CEDAR LAKE TRAIL - BELTLINE STATION BRIDGE R0692 (TRL)
FOUNDATION STAGING PLAN 1

DISCIPLINE: STRUCTURES

SHEET NAME: CBRR0692-BRG-STG-001

SHEET 59 OF 60

Jan, 13 2016 04:17 pm V:\3400_ADC\CAD\SEGMENT E2\PLAN SHEETS\STRUCTURES\CLRT-TRL\CBRR0692-BRG-STG-001.dwg By: Caitlyn.Deutsch

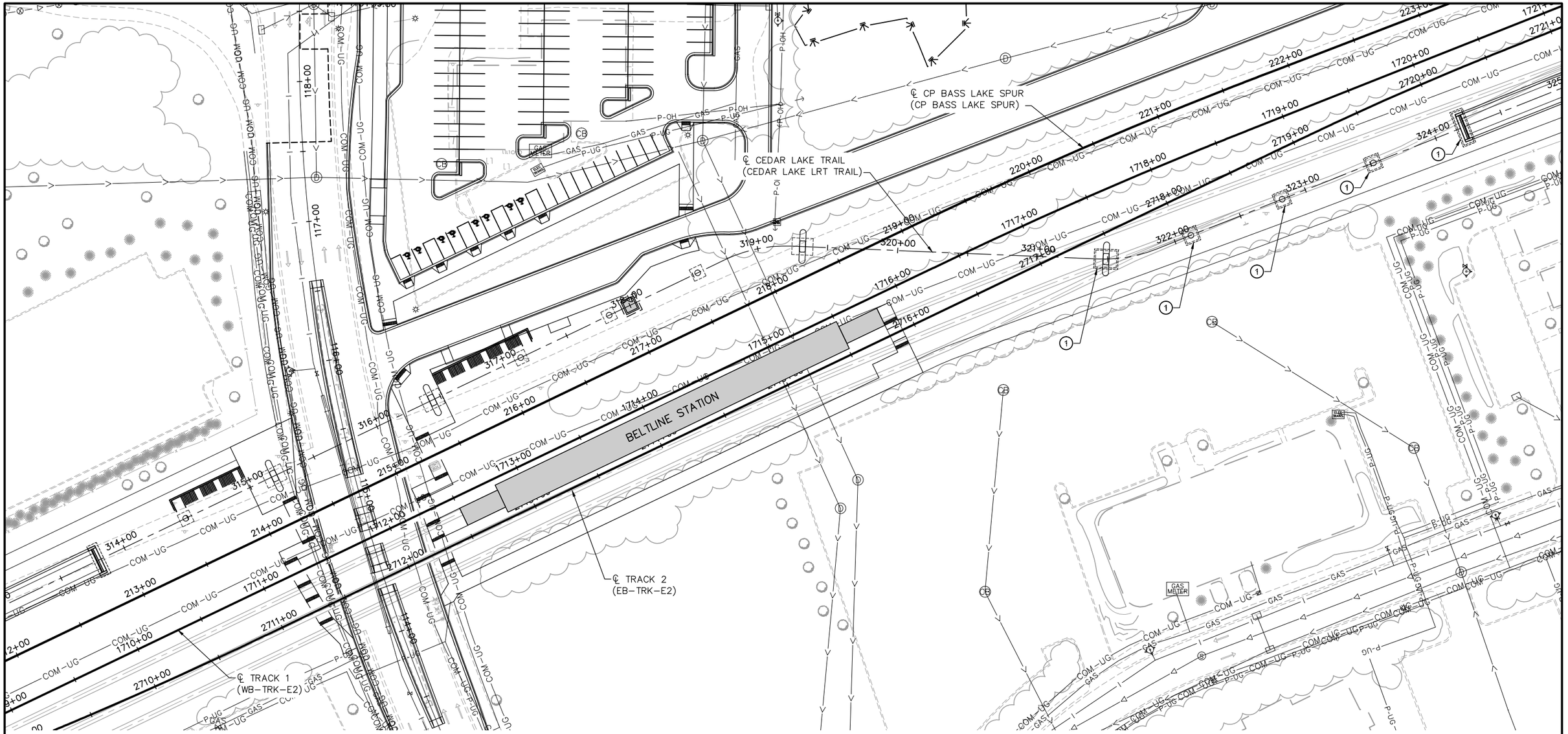

STAGING NOTES:

1. CONSTRUCT FOOTINGS FOR PIER 8 THROUGH PIER 11 AND EAST ABUTMENT.

(1) SUPPORT OF EXCAVATION

NOTES:

EXISTING FREIGHT SHALL BE KEPT OPEN FOR TRAIN USE DURING CONSTRUCTION EXCEPT WITH PRIOR APPROVAL.

CEDAR LAKE TRAIL SHALL BE KEPT OPEN FOR PUBLIC USE DURING CONSTRUCTION EXCEPT WITH PRIOR APPROVAL.

NO.	DATE	BY	CHECK	DESIGN	REVISION / SUBMITTAL

DESIGNED BY: CAD | CHECKED BY: MTC
DRAWN BY: AMC | CHECKED BY: LKZ

AECOM Kimley»Horn

90% SUBMISSION - 01/22/16

METROPOLITAN COUNCIL

SOUTHWEST Green Line LRT Extension

CIVIL - VOLUME 4F
CEDAR LAKE TRAIL - BELTLINE STATION BRIDGE R0692 (TRL)
FOUNDATION STAGING PLAN 2

DISCIPLINE: STRUCTURES

SHEET NAME: CBRR0692-BRG-STG-002

SHEET 60 OF 60

Jan, 13 2016 04:55 pm V:\3400_ADC\CAD\SEGMENT E2\PLAN SHEETS\STRUCTURES\CLRT-TRL\CBRR0692-BRG-STG-002.dwg By: Caitlyn.Deutsch

NOTES:

1. PIER PROTECTION NOT REQUIRED ON PIER 3
2. HORIZONTAL OFFSET SHOWN IS MEASURED PERPENDICULAR FROM CENTERLINE OF TRACK TO FACE OF PIER PROTECTION AT CLOSEST POINT

PROPOSED PIER PROTECTION

FOR AESTHETIC DETAIL REQUIREMENTS REFER TO SHEET 11

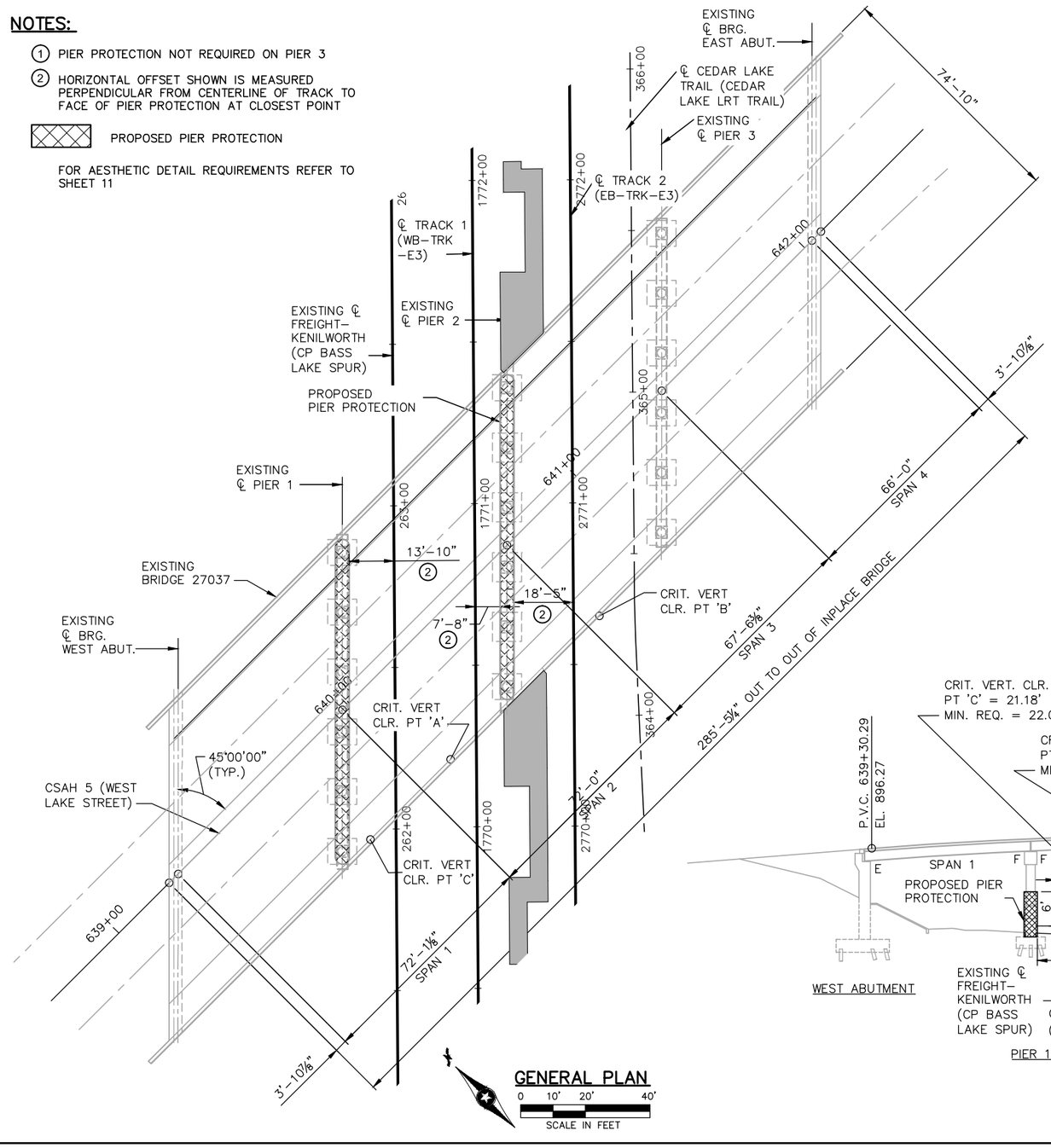

GENERAL PLAN
0 10' 20' 40'
SCALE IN FEET

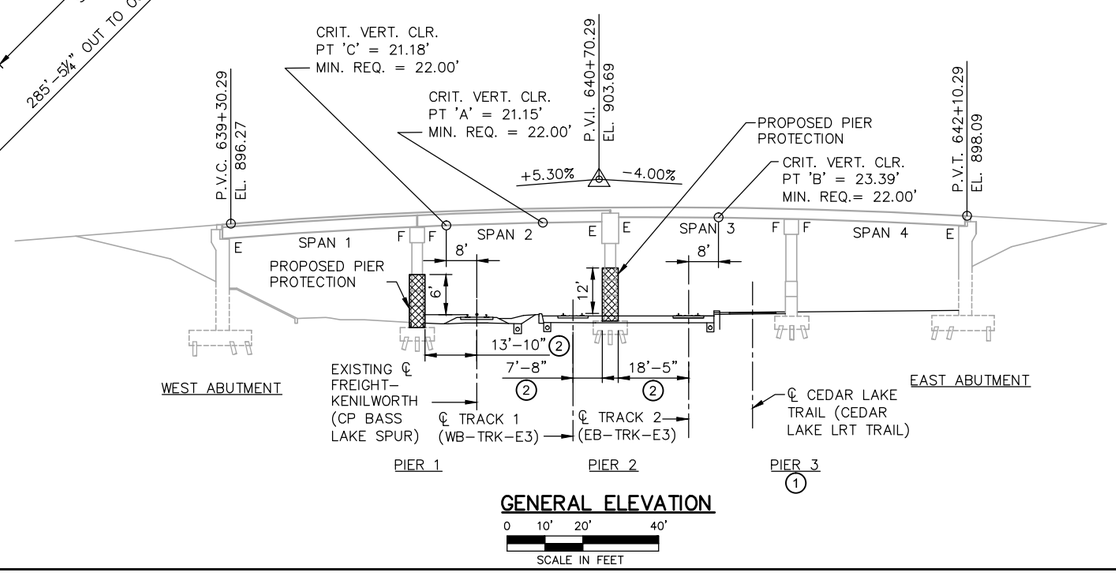

GENERAL ELEVATION
0 10' 20' 40'
SCALE IN FEET

LIST OF SHEETS

NO.	DESCRIPTION
	PIER PROTECTION
1	GENERAL PLAN AND ELEVATION
2	SCHEDULE OF QUANTITIES
3	DETAILS 1
4	DETAILS 2
5	DETAILS 3
6	DETAILS 4
7	REINFORCEMENT 1
8	REINFORCEMENT 2
9	REINFORCEMENT 3
10	REINFORCEMENT 4
11	AESTHETIC DETAILS
	SUPERSTRUCTURE MODIFICATIONS
12	EXISTING GENERAL PLAN AND SECTIONS
13	REMOVAL DETAILS
14	PROPOSED GENERAL PLAN AND SECTIONS
15	SIDEWALK DETAILS & REINFORCEMENT
16	SIDEWALK DETAILS & REINFORCEMENT
17	ORNAMENTAL METAL RAILING
18	STRUCTURAL TUBE RAILING DETAILS
19	ORNAMENTAL METAL RAILING ELEVATIONS
20	NORTH RAIL ELEVATIONS
21	SOUTH RAIL ELEVATIONS
22	SIDEWALK MODIFICATION DETAILS
23	CONDUIT SYSTEM
24	AS–BUILT BRIDGE DATA

DESIGN DATA

AASHTO LRFD BRIGDE DESIGN SPECIFIATIONS, 7TH EDITION, 2014 WITH 2015 INTERIM REVISIONS

2014 AREMA MANUAL FOR RAILWAY ENGINEERING

LOAD AND RESISTANCE FACTOR DESIGN METHOD

SOUTHWEST LIGHT RAIL TRANSIT DESIGN CRITERIA (REVISION 4.0)

PIER PROTECTION
MATERIAL DESIGN PROPERTIES:
REINFORCED CONCRETE:
f'c = 4000 PSI n = 8
fy = 60000 PSI REINFORCEMENT

ALL REINFORCING STEEL TO BE EPOXY COATED

RAILWAY COLLISION LOAD = 600 KIPS

BRIDGE MODIFICATIONS
MATERIAL DESIGN PROPERTIES:
PRESTRESSING CONCRETE:
f'c = 6000 PSI n = 8
fpu = 270 KSI LOW RELAXATION STRANDS
0.75 x fpu FOR INITIAL PRESTRESS

DESIGN SPEED: OVER = 35 MPH
UNDER = N.A.

DECK AREA 21,360 SQ. FT.

HL93 LRFR INVENTORY RATING RF 0.91
HL93 LRFR OPERATING RATING RF 1.18

BRIDGE NO. 27037

CSAH 25 (WEST LAKE STREET) OVER CP RR, SOUTHWEST LRT, AND CEDAR LAKE TRAIL–ABT. 1.2 MI. E. OF JCT. T.H. 100 AND T.H. 7.

100'–6" CAST IN PLACE CONCRETE PIER PROTECTION BARRIER SUPPORTED ON EXISTING FOUNDATION AT PIER 1 AND PIER 2 AND SUPERSTRUCTURE BRIDGE MODIFICATIONS.

BRIDGE I.D. NO. 501

GENERAL PLAN AND ELEVATION

SEC 32/5 T 29N/28N R 24W
CITY OF MINNEAPOLIS HENNEPIN COUNTY

JOB NO. T9N635 | STATE PROJECT NO. 9909–01 | MNDOT REVIEW: JOE NIETFELD

NO.	DATE	BY	CHECK	DESIGN	REVISION / SUBMITTAL

DESIGNED BY: AMC | CHECKED BY: LKZ
DRAWN BY: EBM | CHECKED BY: LKZ

AECOM Kimley»Horn

90% SUBMISSION - 01/22/16

METROPOLITAN COUNCIL

SOUTHWEST Green Line LRT Extension

CIVIL - VOLUME 4F
CSAH 25 (W LAKE ST) (BRIDGE 27037)
PIER PROTECTION
GENERAL PLAN AND ELEVATION

DISCIPLINE: STRUCTURES
SHEET NAME: EX3-STU-PPR-WLKS-VEH-GPE-001

SHEET 1 OF 24

Jan, 12 2016 04:14 pm V:\3400_ADC\CAD\SEGMENT E3\PLAN SHEETS\STRUCTURES\PIER PROTECTION\EX3-STU-PPR-WLKS-VEH-DTL.dwg By: Edgar.McKoy

SUPERSTRUCTURES MODIFICATIONS NOTES:

NO CUTTING WILL BE PERMITTED UNTIL THE CUTTING LIMITS HAVE BEEN OUTLINED BY THE CONTRACTOR AND APPROVED BY THE ENGINEER. REMOVAL AND RECONSTRUCTION SHALL CONFORM TO SPEC. 2433.

HATCHED AREAS INDICATE AREAS TO BE REMOVED.

INPLACE CONDUIT IN SIDEWALK TO REMAIN. CARE SHALL BE TAKEN NOT TO DAMAGE THE CONDUIT OR ITS CONTENTS.

THE CONTRACTOR SHALL MAKE FIELD MEASUREMENTS, AS NECESSARY, PRIOR TO FABRICATION OF COVER PLATES TO ASSURE PROPER FIT IN THE FINAL WORK.

INPLACE EXPANSION DEVICE TO REMAIN. CARE SHALL BE TAKEN NOT TO DAMAGE THE EXPANSION DEVICE.

INPLACE LIGHT POLES TO BE REMOVED AND REPLACED WITH NEW LIGHT POLES AT SAME LOCATION, SEE LIGHTING PLANS.

SCHEDULE OF QUANTITIES

SPEC. SECTION	ITEM	UNIT	QUANTITY
–	CONSTRUT PIER PROTECTION AND MODIFICATIONS TO BRIDGE 27037	LUMP SUM	LS

COMPONENT ITEM SUMMARY (BRIDGE 27037)

	SPEC. SECTION (2)	COMPONENT ITEM	UNIT (1)	QUANTITY (1)
	2104	REMOVE LIGHT POLES	EACH	
(6)	2401	BARRIER CONCRETE (3S52)	LIN. FT.	
(3)	2401	SIDEWALK CONCRETE (3F52)	SQ. FT.	
	2401	STRUCTURAL CONCRETE (3B52)	CU. YD.	
	2401	REINFORCING BARS (EPOXY COATED)	POUND	
	2401	RESURFACE EXISTING PARAPET RAILING EXTERIOR	SQ. FT.	
	2402	ACRYLIC PAINT	SQ. FT.	
	2402	ORNAMENTAL METAL RAILING TYPE MPLS	LIN. FT.	
	2402	STRUCTURAL TUBE RAILING	LIN. FT.	
	2402	STRUCTURAL STEEL	POUND	
	2404	CHIP SEAL WEARING COURSE	SQ. FT.	
	2411	ARCHITECTURAL CONCRETE TEXTURE	SQ. FT.	
	2433	ANCHORAGE, TYPE REINF. BARS	EACH	
(4)	2433	REMOVE CONCRETE SIDEWALK	SQ. FT.	
(5)	2433	REMOVE METAL RAILING	LIN. FT.	
(7)	2433	REMOVE CONCRETE PARAPET	LIN. FT.	
	2433	EPOXY SEALER	SQ. FT.	
(8)	2545	CONDUIT SYSTEM	LUMP SUM	
	2451	STRUCTURE EXCAVATION CLASS U	CU. YD.	

(1) QUANTITIES LISTED FOR THE COMPONENT ITEMS OF THE LUMP SUM CONSTRUCT PIER PROTECTION AND MODIFICATIONS TO BRIDGE 27037 ITEM ARE FOR INFORMATION PURPOSES. ANY ADDITIONAL ITEMS OR CHANGES IN QUANTITIES REQUIRED SHALL BE PROVIDED BY THE CONTRACTOR WITH NO ADDITIONAL COMPENSATION.

(2) MEASUREMENT AND PAYMENT FOR COMPONENT ITEMS SHALL BE PART OF THE LUMP SUM PAYMENT FOR CONSTRUCT PIER PROTECTION AND MODIFICATIONS TO BRIDGE 27037. REFER TO MNDOT STANDARD SPECIFICATION OR SPECIAL PROVISION FOR TECHNICAL SPECIFICATION REQUIREMENTS FOR ALL PROVISIONS OTHER THAN MEASUREMENT & PAYMENT REQUIREMENTS.

(3) SIDEWALK CONCRETE (3F52) VOLUME IS APPROXIMATELY 25 CUBIC YARDS.

(4) INCLUDES REMOVAL OF 2'–0" OF INPLACE SIDEWALK ON EACH SIDE OF THE BRIDGE.

(5) INCLUDES REMOVAL OF ALL METAL RAILING ON EACH SIDE OF THE BRIDGE.

(6) BARRIER CONCRETE (3S52) VOLUME IS APPROXIMATELY 46 CUBIC YARDS.

(7) INCLUDES REMOVAL OF SPECIFIED SECTIONS OF INPLACE CONCRETE PARAPET.

(8) THE LUMP SUM ITEM FOR THE CONDUIT SYSTEM INCLUDES ALL STRUCTURAL STEEL NECESSARY TO CONSTRUCT THE CONDUIT SYSTEM.

CONSTRUCTION NOTES

THE 2016 EDITION OF THE MINNESOTA DEPARTMENT OF TRANSPORTATION "STANDARD SPECIFICATIONS FOR CONSTRUCTION" SHALL GOVERN.

THE BAR SIZES SHOWN IN THIS PLAN ARE IN U.S. CUSTOMARY DESIGNATIONS. THE FIRST DIGIT OR THE FIRST TWO DIGITS OF EACH BAR MARK INDICATE THE BAR SIZE.

BARS MARKED WITH THE SUFFIX "E" SHALL BE EPOXY COATED IN ACCORDANCE WITH SPEC. 3301.

CONTRACTOR SHALL FIELD VERIFY INPLACE BRIDGE ELEVATIONS & DIMENSIONS

Jan, 12 2016 04:14 pm V:\3400_ADC\CAD\SEGMENT E3\PLAN SHEETS\STRUCTURES\PIER PROTECTION\EX3-STU-PPR-WLKS-VEH-DTL.dwg By: Edgar.McKoy

NO.	DATE	BY	CHECK	DESIGN	REVISION / SUBMITTAL

DESIGNED BY: AMC | CHECKED BY: LKZ
DRAWN BY: EBM | CHECKED BY: LKZ

AECOM Kimley»Horn

90% SUBMISSION - 01/22/16

METROPOLITAN COUNCIL

SOUTHWEST Green Line LRT Extension

CIVIL - VOLUME 4F
CSAH 25 (W LAKE ST) (BRIDGE 27037)
PIER PROTECTION
SCHEDULE OF QUANTITIES

DISCIPLINE: STRUCTURES
SHEET NAME: EX3-STU-PPR-WLKS-VEH-DTL-002

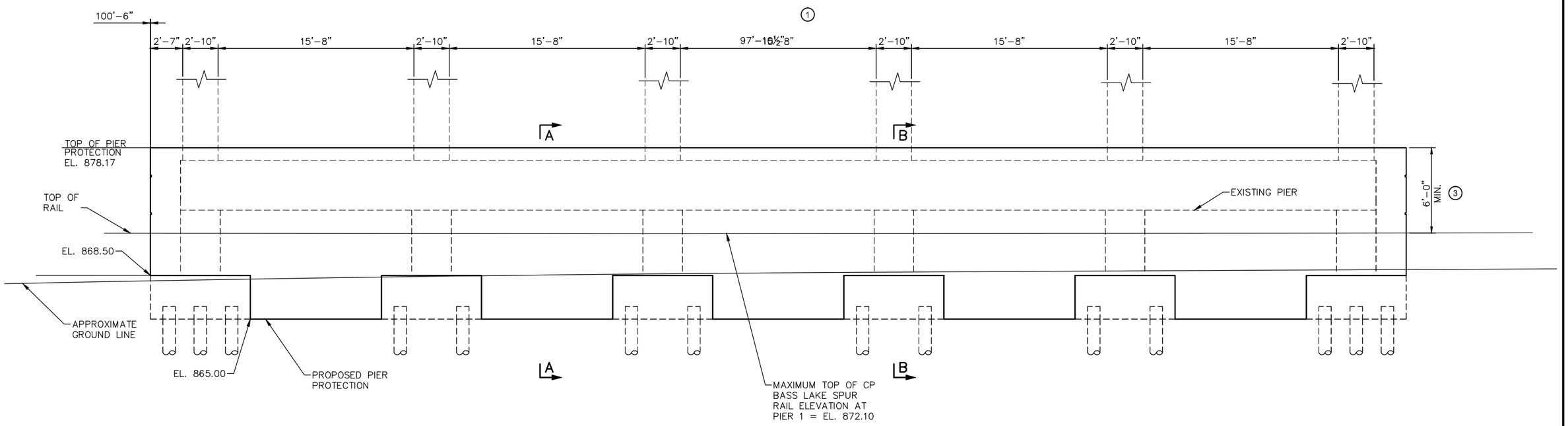

ELEVATION–PIER 1

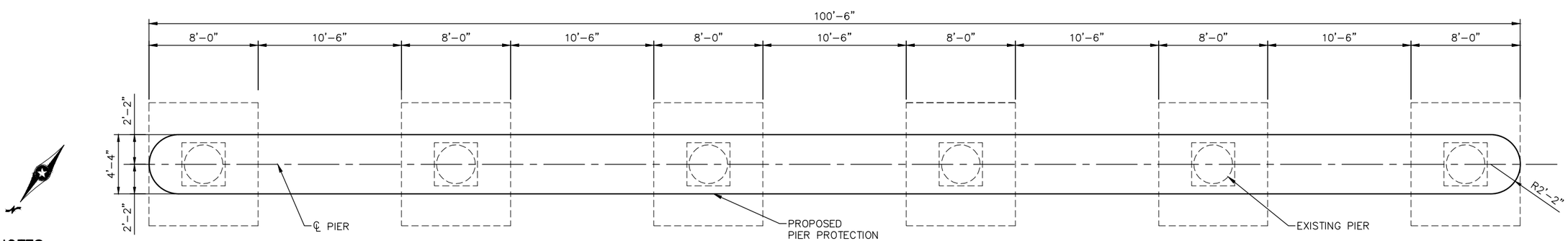

PLAN – PIER 1 (2)

NOTES:

SEE NEXT SHEET FOR SECTIONS A–A AND B–B

FOR AESTHETIC DETAIL REQUIREMENTS REFER TO SHEET 11

(1) STRUCTURAL CONCRETE (3B52)

(2) EXISTING PILES NOT SHOWN

(3) MINIMUM HEIGHT ABOVE TOP OF RAIL

NO.	DATE	BY	CHECK	DESIGN	REVISION / SUBMITTAL

DESIGNED BY: AMC | CHECKED BY: LKZ

DRAWN BY: CAD | CHECKED BY: LKZ

AECOM Kimley»Horn

90% SUBMISSION - 01/22/16

METROPOLITAN COUNCIL

SOUTHWEST Green Line LRT Extension

CIVIL - VOLUME 4F
CSAH 25 (W LAKE ST)(BRIDGE 27037)
PIER PROTECTION
DETAILS 1

DISCIPLINE: STRUCTURES

SHEET NAME: EX3-STU-PPR-WLKS-VEH-PIR-001

SHEET 3 OF 24

Jan, 12 2016 04:14 pm V:\3400_ADC\CAD\SEGMENT E3\PLAN SHEETS\STRUCTURES\PIER PROTECTION\EX3-STU-PPR-WLKS-VEH-DTL.dwg By: Edgar.McKoy

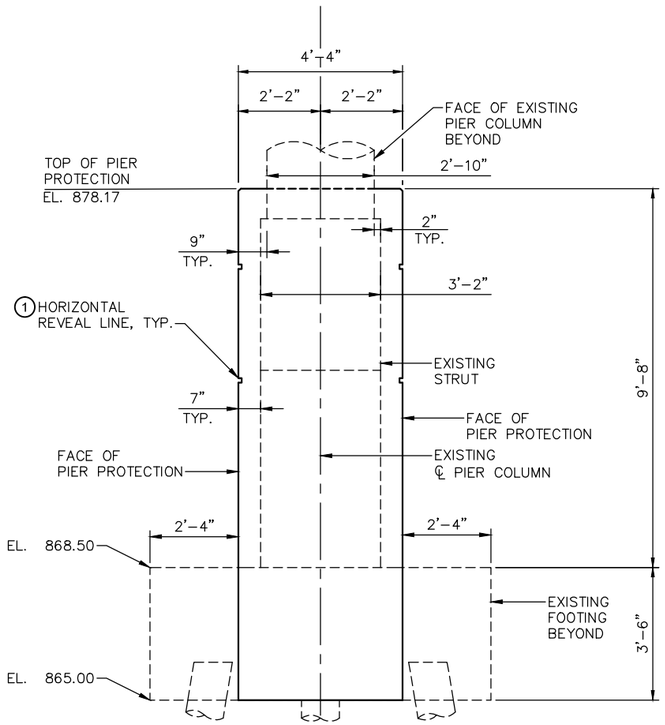

SECTION A–A

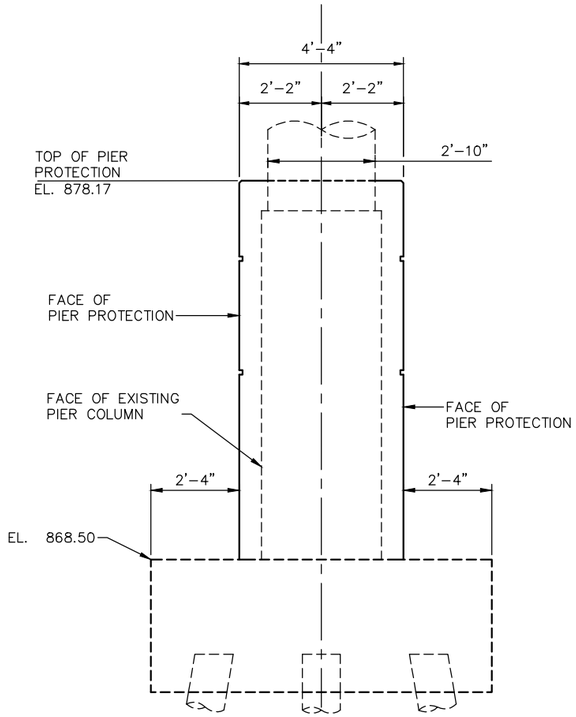

SECTION B–B

NOTES:

1. FOR AESTHETIC DETAIL REQUIREMENTS REFER TO SHEET 11

NO.	DATE	BY	CHECK	DESIGN	REVISION / SUBMITTAL

DESIGNED BY: AMC | CHECKED BY: LKZ
DRAWN BY: EBM | CHECKED BY: LKZ

AECOM Kimley»Horn

90% SUBMISSION - 01/22/16

METROPOLITAN COUNCIL

SOUTHWEST Green Line LRT Extension

CIVIL - VOLUME 4F
CSAH 25 (W LAKE ST) (BRIDGE 27037)
PIER PROTECTION
DETAILS 2

DISCIPLINE: STRUCTURES
SHEET NAME: EX3-STU-PPR-WLKS-VEH-PIR-002

SHEET 4 OF 24

Jan, 12 2016 04:14 pm V:\3400_ADC\CAD\SEGMENT E3\PLAN SHEETS\STRUCTURES\PIER PROTECTION\EX3-STU-PPR-WLKS-VEH-DTL.dwg By: Edgar.McKoy

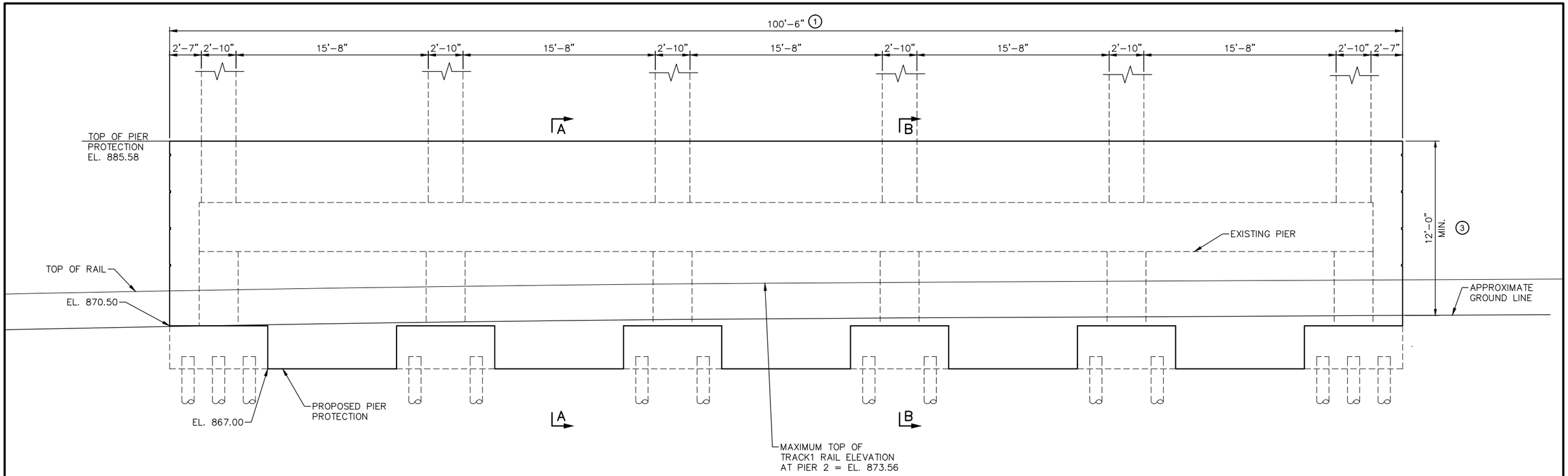

ELEVATION–PIER 2

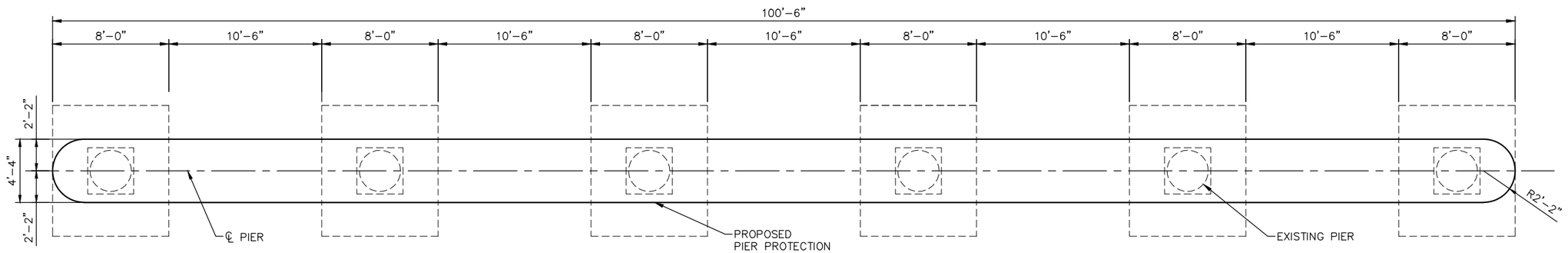

PLAN – PIER 2 (2)

NOTES:

SEE NEXT SHEET FOR SECTIONS A–A AND B–B

FOR AESTHETIC DETAIL REQUIREMENTS REFER TO SHEET 11

(1) STRUCTURIAL CONCRETE(3B52)

(2) EXISTING PILES NOT SHOWN

(3) MINIMUM HEIGHT ABOVE TOP OF RAIL

NO.	DATE	BY	CHECK	DESIGN	REVISION / SUBMITTAL

DESIGNED BY: AMC | CHECKED BY: LKZ

DRAWN BY: EBM | CHECKED BY: LKZ

AECOM Kimley»Horn

90% SUBMISSION - 01/22/16

METROPOLITAN COUNCIL

SOUTHWEST Green Line LRT Extension

CIVIL - VOLUME 4F
CSAH 25 (W LAKE ST) (BRIDGE 27037)
PIER PROTECTION
DETAILS 3

DISCIPLINE: STRUCTURES

SHEET NAME: EX3-STU-PPR-WLKS-VEH-PIR-003

SHEET 5 OF 24

Jan, 12 2016 04:14 pm V:\3400_ADC\CAD\SEGMENT E3\PLAN SHEETS\STRUCTURES\PIER PROTECTION\EX3-STU-PPR-WLKS-VEH-DTL.dwg By: Edgar.McKoy

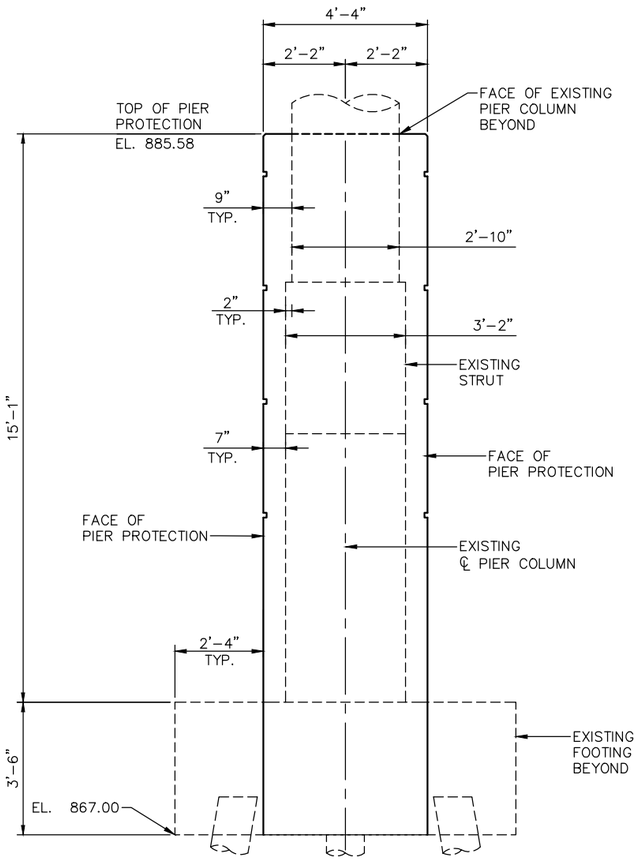

SECTION A–A

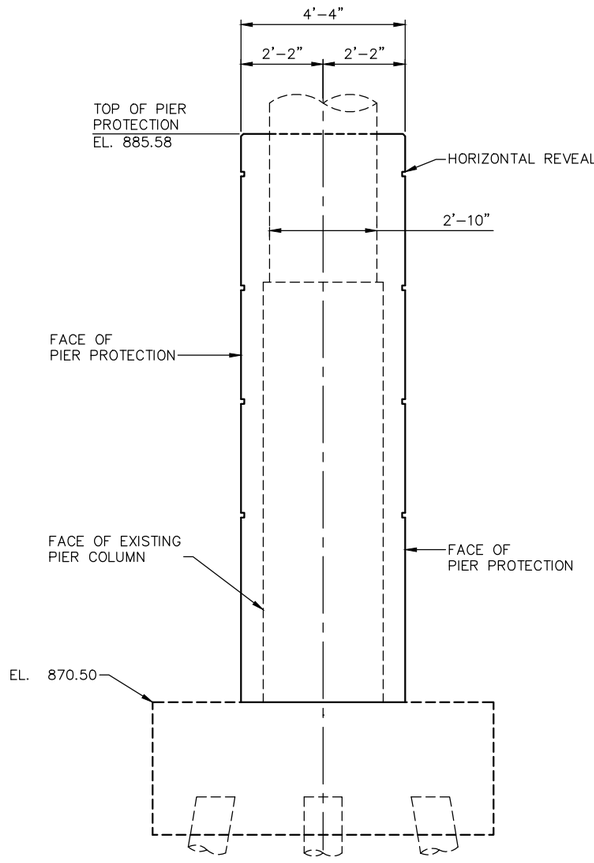

SECTION B–B

NOTES:

(1) FOR AESTHETIC DETAIL REQUIREMENTS REFER TO SHEET 11

NO.	DATE	BY	CHECK	DESIGN	REVISION / SUBMITTAL

DESIGNED BY: AMC | CHECKED BY: LKZ
DRAWN BY: EBM | CHECKED BY: LKZ

AECOM Kimley»Horn

90% SUBMISSION - 01/22/16

METROPOLITAN COUNCIL

SOUTHWEST Green Line LRT Extension

CIVIL - VOLUME 4F
CSAH 25 (W LAKE ST) (BRIDGE 27037)
PIER PROTECTION
DETAILS 4

DISCIPLINE: STRUCTURES

SHEET NAME: EX3-STU-PPR-WLKS-VEH-PIR-004

SHEET 6 OF 24

Jan, 12 2016 04:14 pm V:\3400_ADC\CAD\SEGMENT E3\PLAN SHEETS\STRUCTURES\PIER PROTECTION\EX3-STU-PPR-WLKS-VEH-DTL.dwg By: Edgar.McKoy

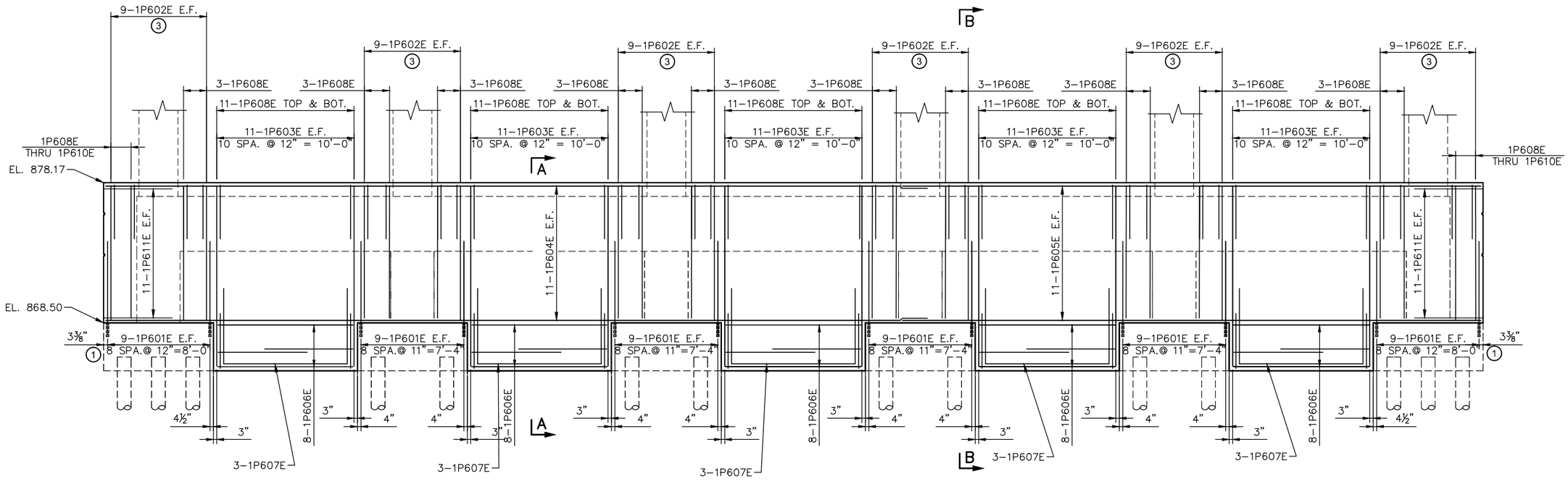

ELEVATION–PIER 1 ②

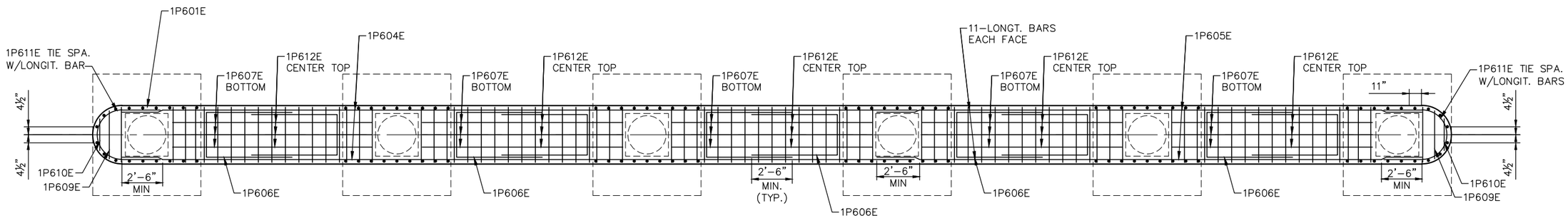

PLAN – PIER 1

NOTES:

CLEAR COVER AT REVEAL SHALL BE 2"

FOR AESTHETIC DETAIL REQUIREMENTS REFER TO SHEET 11

① MEASURED ALONG CURVE

② COAT PIER COLUMNS WITH AN APPROVED EPOXY BONDING AGENT.

③ LAP WITH 1P601E

NO.	DATE	BY	CHECK	DESIGN	REVISION / SUBMITTAL

DESIGNED BY: AMC | CHECKED BY: LKZ

DRAWN BY: EBM | CHECKED BY: LKZ

AECOM Kimley»Horn

90% SUBMISSION - 01/22/16

METROPOLITAN COUNCIL

SOUTHWEST Green Line LRT Extension

CIVIL - VOLUME 4F
CSAH 25 (W LAKE ST) (BRIDGE 27037)
PIER PROTECTION
REINFORCEMENT 1

DISCIPLINE: STRUCTURES

SHEET NAME: EX3-STU-PPR-WLKS-VEH-PIR-005

SHEET 7 OF 24

Jan, 12 2016 04:14 pm V:\3400_ADC\CAD\SEGMENT E3\PLAN SHEETS\STRUCTURES\PIER PROTECTION\EX3-STU-PPR-WLKS-VEH-DTL.dwg By: Edgar.McKoy

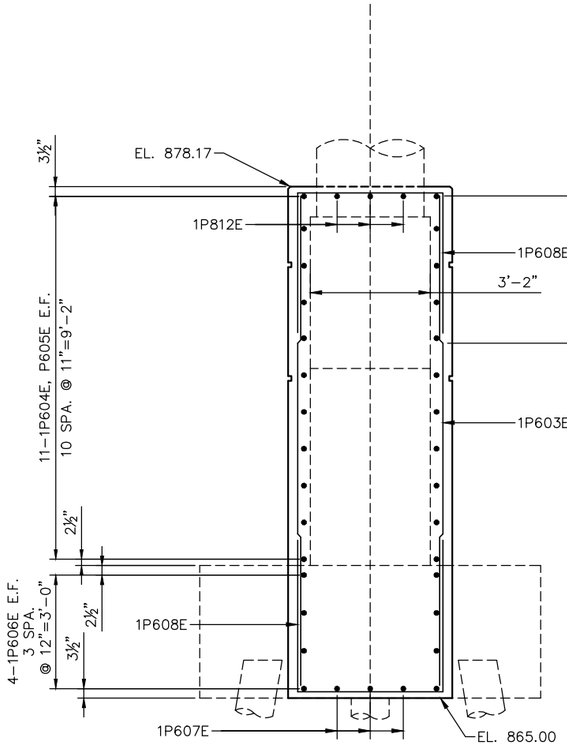

SECTION A–A

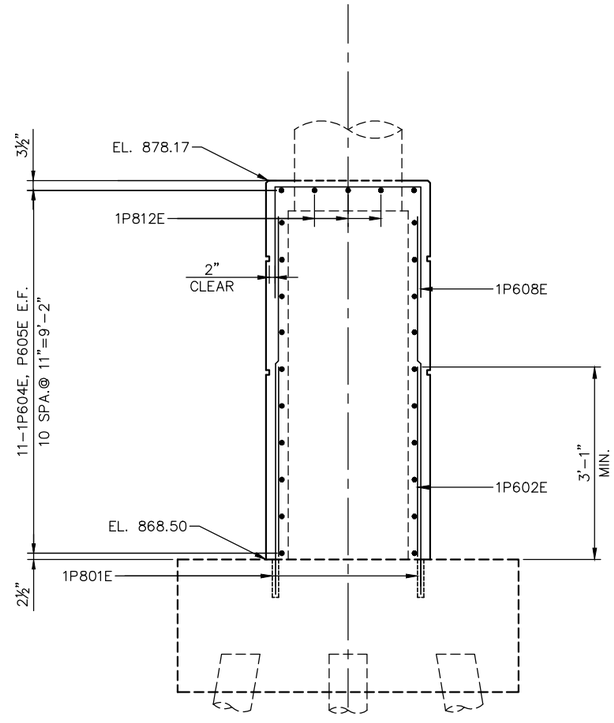

SECTION B–B

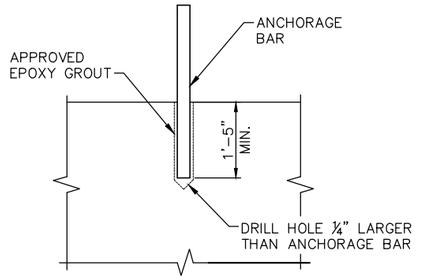

ANCHORAGE DETAIL

BILL OF REINFORCEMENT

BAR	NO.	LENGTH	SHAPE	LOCATION
1P601E	108	4'-10"	STR.	FOOTING ANCHORAGE
1P602E	126	9'-6"	STR.	BARRIER VERT. E.F.
1P603E	110	12'-10"	STR.	BARRIER VERT. E.F.
1P604E	22	58'-8"	STR.	BARRIER LONG. E.F.
1P605E	22	39'-6"	STR.	BARRIER LONG. E.F.
1P606E	40	16'-6"	BENT	TIE HORIZONTAL
1P607E	15	21'-8"	BENT	BARRIER LONG. BOT. CENTER
1P608E	142	10'-4"	BENT	TIE VERTICAL
1P609E	2	10'-2"	BENT	TIE VERTICAL
1P610E	2	9'-1"	BENT	TIE VERTICAL
1P611E	22	11'-1"	BENT	TIE HORIZONTAL
1P612E	15	12'-7"	STR.	BARRIER LONG. TOP CENTER

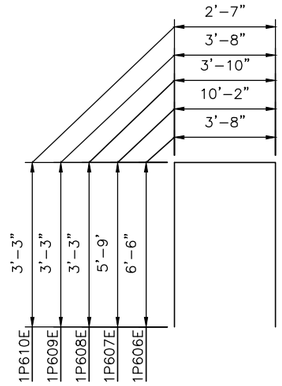

1P606E, 1P607E, 1P608E

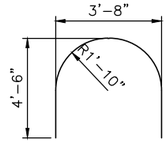

1P609E

NOTES:

FOR AESTHETIC DETAIL REQUIREMENTS REFER TO SHEET 11

NO.	DATE	BY	CHECK	DESIGN	REVISION / SUBMITTAL

DESIGNED BY: AMC | CHECKED BY: LKZ
DRAWN BY: EBM | CHECKED BY: LKZ

AECOM Kimley»Horn

90% SUBMISSION - 01/22/16

METROPOLITAN COUNCIL

SOUTHWEST Green Line LRT Extension

CIVIL - VOLUME 4F
CSAH 25 (W LAKE ST) (BRIDGE 27037)
PIER PROTECTION
REINFORCEMENT 2

DISCIPLINE: STRUCTURES

SHEET NAME: EX3-STU-PPR-WLKS-VEH-PIR-006

SHEET 8 OF 24

Jan, 12 2016 04:15 pm V:\3400_ADC\CAD\SEGMENT E3\PLAN SHEETS\STRUCTURES\PIER PROTECTION\EX3-STU-PPR-WLKS-VEH-DTL.dwg By: Edgar.McKoy

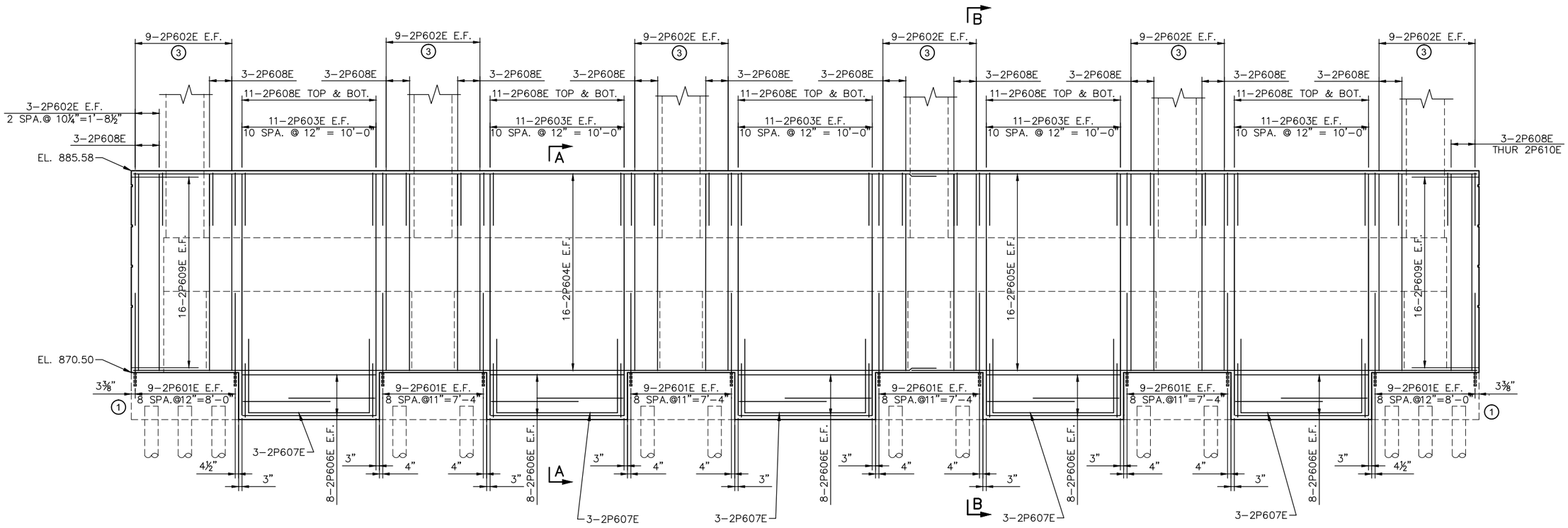

ELEVATION–PIER 2 ②

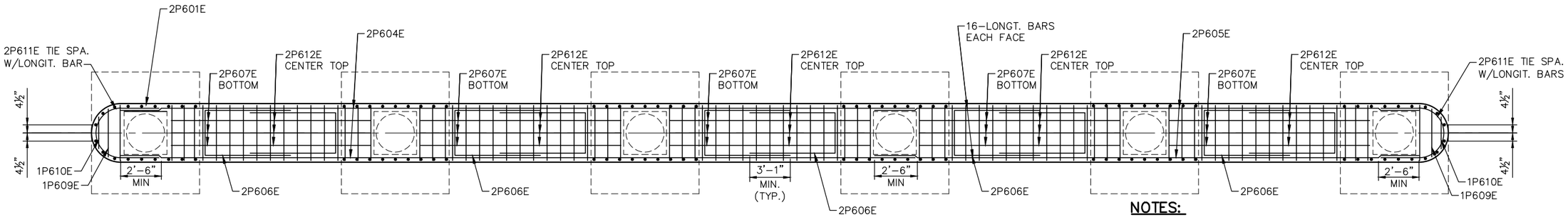

SECTION C–C

NOTES:

CLEAR COVER AT REVEAL SHALL BE 2:

FOR AESTHETIC DETAIL REQUIREMENTS REFER TO SHEET 11

① MEASURED ALONG CURVE

② COAT PIER COLUMNS WITH AN APPROVED EPOXY BONDING AGENT.

③ LAP WITH 2P601E

NO.	DATE	BY	CHECK	DESIGN	REVISION / SUBMITTAL

DESIGNED BY: AMC | CHECKED BY: LKZ

DRAWN BY: EBM | CHECKED BY: LKZ

AECOM Kimley»Horn

90% SUBMISSION - 01/22/16

METROPOLITAN COUNCIL

SOUTHWEST Green Line LRT Extension

CIVIL - VOLUME 4F
CSAH 25 (W LAKE ST) (BRIDGE 27037)
PIER PROTECTION
REINFORCEMENT 3

DISCIPLINE: STRUCTURES

SHEET NAME: EX3-STU-PPR-WLKS-VEH-PIR-007

SHEET 9 OF 24

Jan, 12 2016 04:15 pm V:\3400_ADC\CAD\SEGMENT E3\PLAN SHEETS\STRUCTURES\PIER PROTECTION\EX3-STU-PPR-WLKS-VEH-DTL.dwg By: Edgar.McKoy

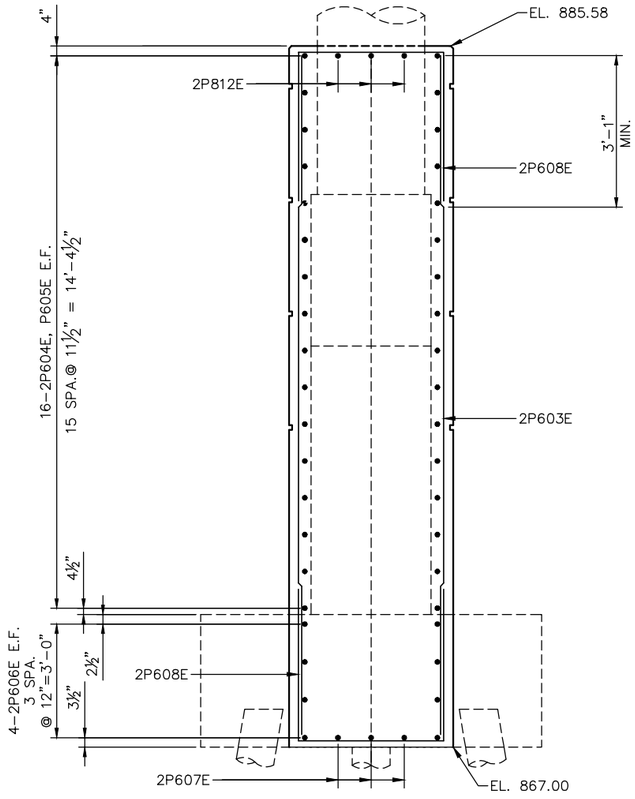

SECTION A–A

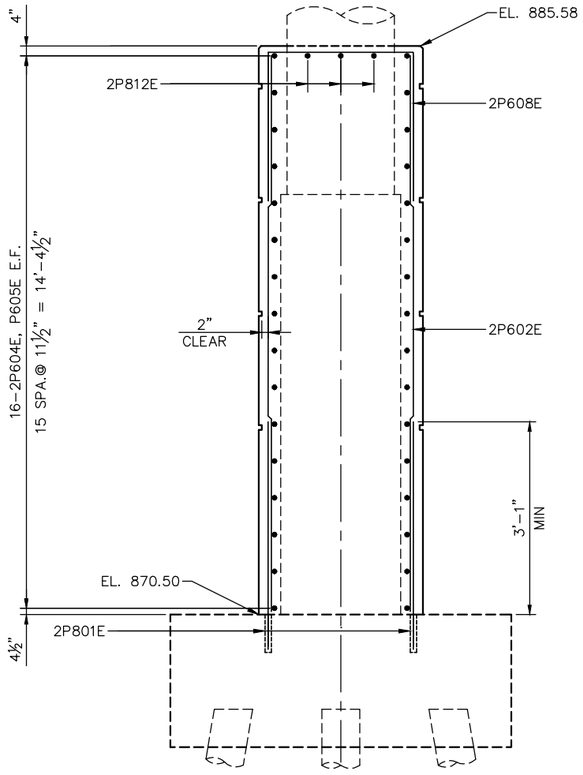

SECTION B–B

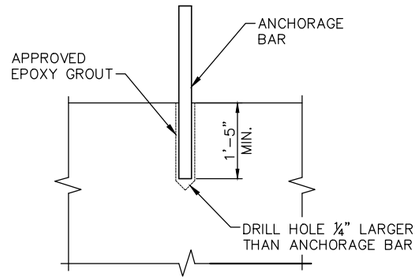

ANCHORAGE DETAIL

BILL OF REINFORCEMENT				
BAR	NO.	LENGTH	SHAPE	LOCATION
2P601E	108	4'-10"	STR.	FOOTING ANCHORAGE
2P602E	126	14'-11"	STR.	BARRIER VERT. E.F.
2P603E	110	18'-3"	STR.	BARRIER VERT. E.F.
2P604E	32	58'-8"	STR.	BARRIER LONG. E.F.
2P605E	32	39'-6"	STR.	BARRIER LONG. E.F.
2P606E	40	16'-6"	BENT	TIE HORIZONTAL
2P607E	15	21'-8"	BENT	BARRIER LONG. BOT. CENTER
2P608E	142	10'-4"	BENT	TIE VERTICAL
2P609E	2	10'-2"	BENT	TIE VERTICAL
2P610E	2	9'-1"	BENT	TIE VERTICAL
2P611E	32	11'-1"	BENT	TIE HORIZONTAL
2P612E	15	12'-7"	STR.	BARRIER LONG. TOP CENTER

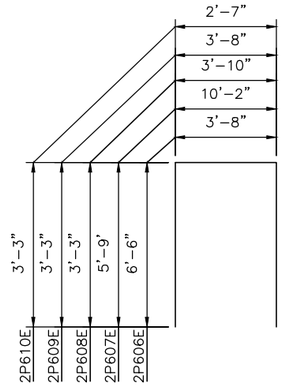

2P606E, 2P607E, 2P608E

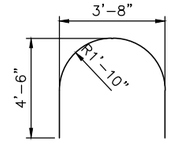

2P609E

NOTES:

FOR AESTHETIC DETAIL REQUIREMENTS REFER TO SHEET 11

NO.	DATE	BY	CHECK	DESIGN	REVISION / SUBMITTAL

DESIGNED BY: AMC CHECKED BY: LKZ
DRAWN BY: CAD CHECKED BY: LKZ

AECOM Kimley»Horn

90% SUBMISSION - 01/22/16

METROPOLITAN COUNCIL

SOUTHWEST Green Line LRT Extension

CIVIL - VOLUME 4F
CSAH 25 (W LAKE ST) (BRIDGE 27037)
PIER PROTECTION
REINFORCEMENT 4

DISCIPLINE: STRUCTURES

SHEET NAME: EX3-STU-PPR-WLKS-VEH-PIR-008

SHEET 10 OF 24

Jan, 12 2016 04:15 pm V:\3400_ADC\CAD\SEGMENT E3\PLAN SHEETS\STRUCTURES\PIER PROTECTION\EX3-STU-PPR-WLKS-VEH-DTL.dwg By: Edgar.McKoy

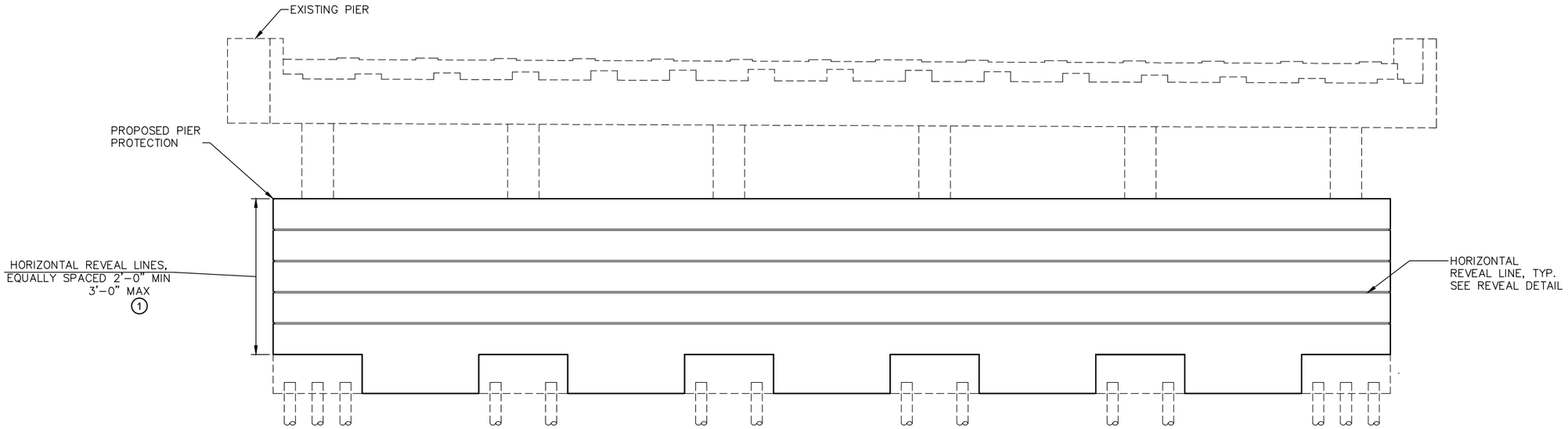

ELEVATION–PIER (2)

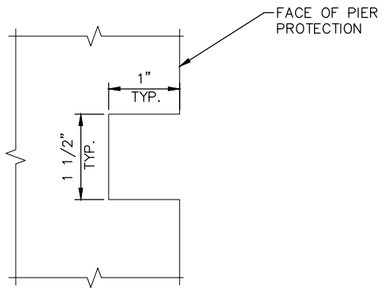

REVEAL DETAIL

NOTES:

1. PROVIDE HORIZONTAL REVEAL LINES EQUALLY SPACED AS SHOWN ON FRONT AND BACK FACE OF PIER PROTECTION.
2. PIER 2 SHOWN, PIER 1 SIMILAR

PROVIDE ¾" CHAMFER AT TOP OF PIER PROTECTION

NO.	DATE	BY	CHECK	DESIGN	REVISION / SUBMITTAL

DESIGNED BY: AMC | CHECKED BY: LKZ
DRAWN BY: CAD | CHECKED BY: LKZ

AECOM Kimley»Horn

90% SUBMISSION - 01/22/16

METROPOLITAN COUNCIL

SOUTHWEST Green Line LRT Extension

CIVIL - VOLUME 4F
CSAH 25 (W LAKE ST)(BRIDGE 27037)
PIER PROTECTION
AESTHETIC DETAILS

DISCIPLINE: STRUCTURES
SHEET NAME: EX3-STU-PPR-WLKS-VEH-PIR-009

SHEET 11 OF 24

Jan, 12 2016 04:15 pm V:\3400_ADC\CAD\SEGMENT E3\PLAN SHEETS\STRUCTURES\PIER PROTECTION\EX3-STU-PPR-WLKS-VEH-DTL.dwg By: Edgar.McKoy

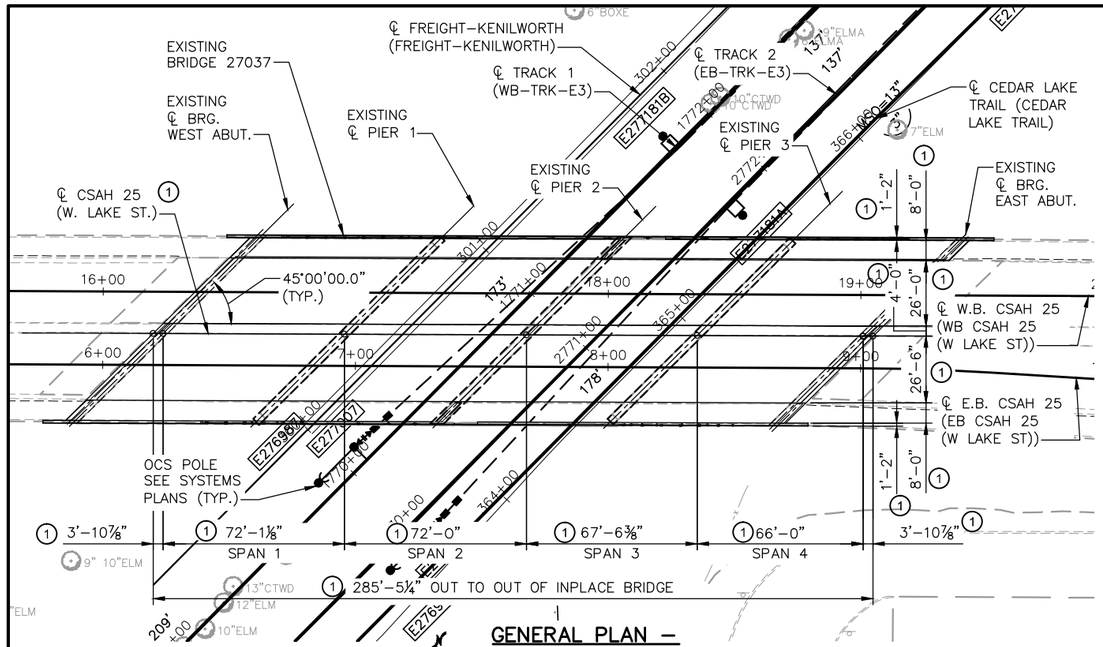

GENERAL PLAN – EXISTING CONDITION

0 15' 30' 60'
SCALE IN FEET

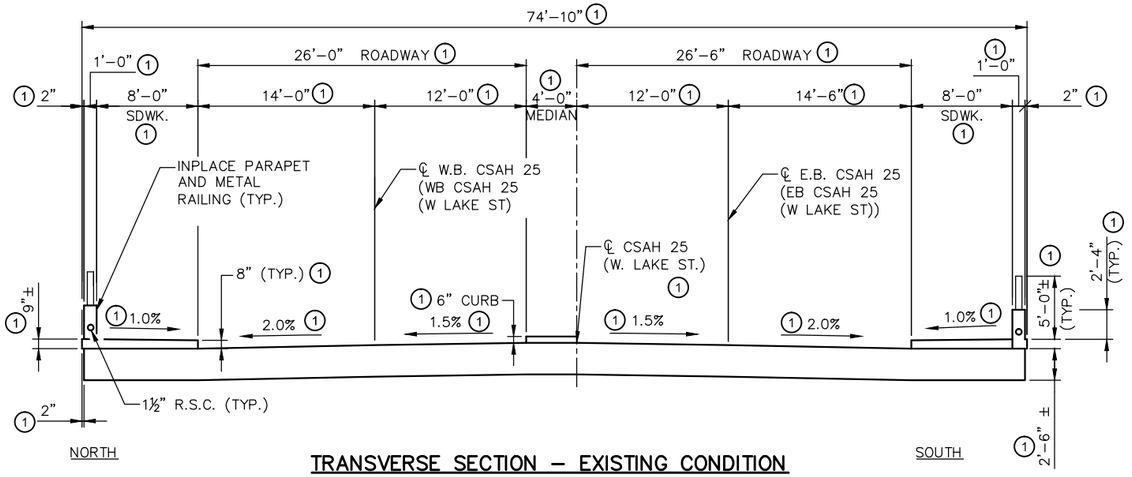

TRANSVERSE SECTION – EXISTING CONDITION SPAN 3 AND SPAN 4

0 3' 6' 12'
SCALE IN FEET

(1) PER ORIGINAL BRIDGE PLAN DATED 12–13–90.

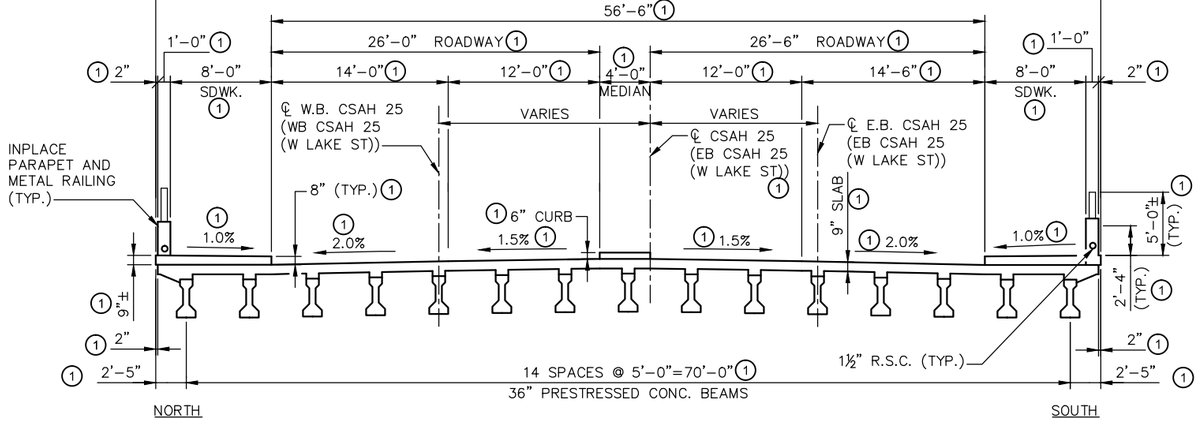

TRANSVERSE SECTION – EXISTING CONDITION SPAN 1 AND SPAN 2

0 3' 6' 12'
SCALE IN FEET

NO.	DATE	BY	CHECK	DESIGN	REVISION / SUBMITTAL

DESIGNED BY: JCW CHECKED BY: SAD
DRAWN BY: JIK CHECKED BY: SAD

AECOM Kimley»Horn

90% SUBMISSION - 01/22/16

METROPOLITAN COUNCIL

SOUTHWEST Green Line LRT Extension

CIVIL - VOLUME 4F
CSAH 25 (W LAKE ST) (BRIDGE 27037)
SUPERSTRUCTURE MODIFICATIONS
EXISTING GENERAL PLAN AND SECTIONS

DISCIPLINE: STRUCTURES
SHEET NAME: CBR27037-BRM-GPE-001

SHEET 12 OF 24

Jan, 15 2016 09:17 am V:\3400_ADC\CAD\SEGMENT E3\PLAN SHEETS\STRUCTURES\BR27037 MODS\CBR27037-BRM-GPE-001.dwg By: Jim.Kimble

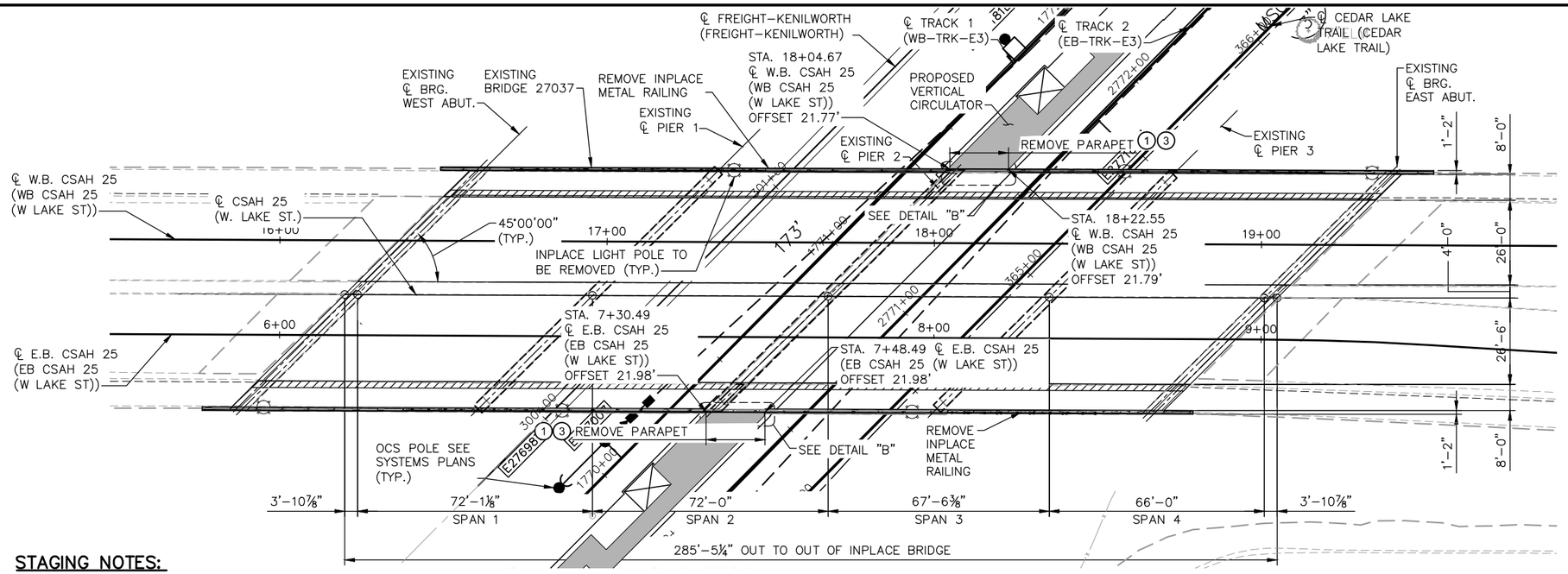

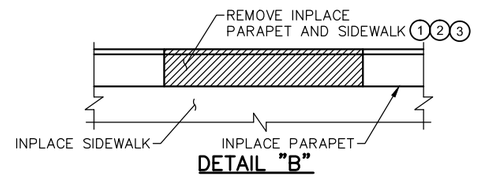

DETAIL "B"

STAGING NOTES:

MOVE TRAFFIC TO ADJACENT LANES DURING CONSTRUCTION ACTIVITY IN OUTER LANES.

SIDEWALK TO BE CLOSED DURING REMOVAL AND CONSTRUCTION.

GENERAL PLAN – REMOVALS

0 10' 20' 40'

SCALE IN FEET

NOTES:

DENOTES AREAS TO BE REMOVED.

ALL INPLACE ANCHOR BOLTS FOR FENCE THAT ARE REMOVED SHALL BE CUT FLUSH WITH TOP OF INPLACE PARAPET.

(1) SEE PROPOSED GENERAL PLAN AND SECTIONS FOR LENGTH OF PARAPET REMOVAL.

(2) INPLACE REINFORCING NOT COMPLETELY EXPOSED TO REMAIN IN PLACE. CLEAN, STRAIGHTEN AND ADJUST AS REQUIRED. COMPLETELY EXPOSED BARS TO BE REMOVED AND DISPOSED OF.

(3) REMOVAL OF PARAPET SHALL EXTEND 2" BELOW THE LEVEL OF INPLACE SIDEWALK.

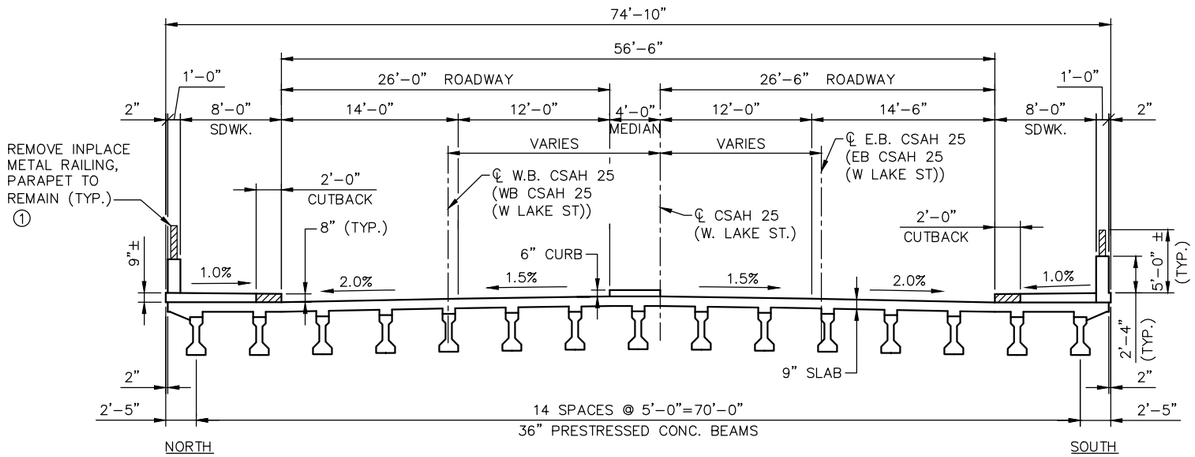

TRANSVERSE SECTION – REMOVALS SPAN 1 AND SPAN 2

0 3' 6' 12'

SCALE IN FEET

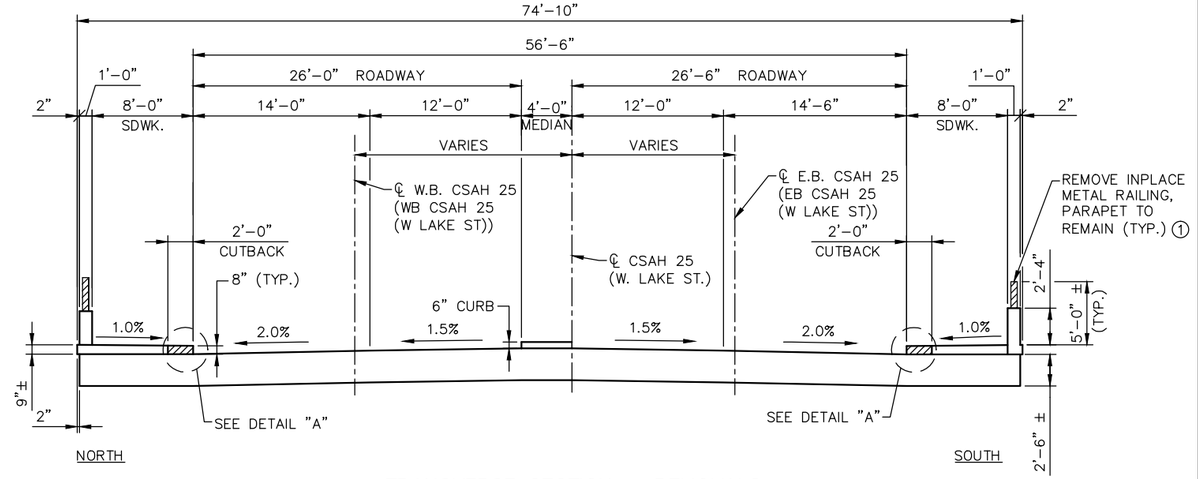

TRANSVERSE SECTION – REMOVALS SPAN 3 AND SPAN 4

0 3' 6' 12'

SCALE IN FEET

NO.	DATE	BY	CHECK	DESIGN	REVISION / SUBMITTAL

DESIGNED BY: JCW | CHECKED BY: SAD
DRAWN BY: JIK | CHECKED BY: SAD

AECOM Kimley»Horn

90% SUBMISSION - 01/22/16

METROPOLITAN COUNCIL

SOUTHWEST Green Line LRT Extension

CIVIL - VOLUME 4F
CSAH 25 (W LAKE ST) (BRIDGE 27037)
SUPERSTRUCTURE MODIFICATIONS
REMOVAL DETAILS

DISCIPLINE: STRUCTURES

SHEET NAME: CBR27037-BRM-DTL-001

SHEET 13 OF 24

Jan, 15 2016 09:21 am v:\3400_ADC\CAD\SEGMENT E3\PLAN SHEETS\STRUCTURES\BR27037 MODS\CBR27037-BRM-DTL-001.dwg By: Jim.Kimble

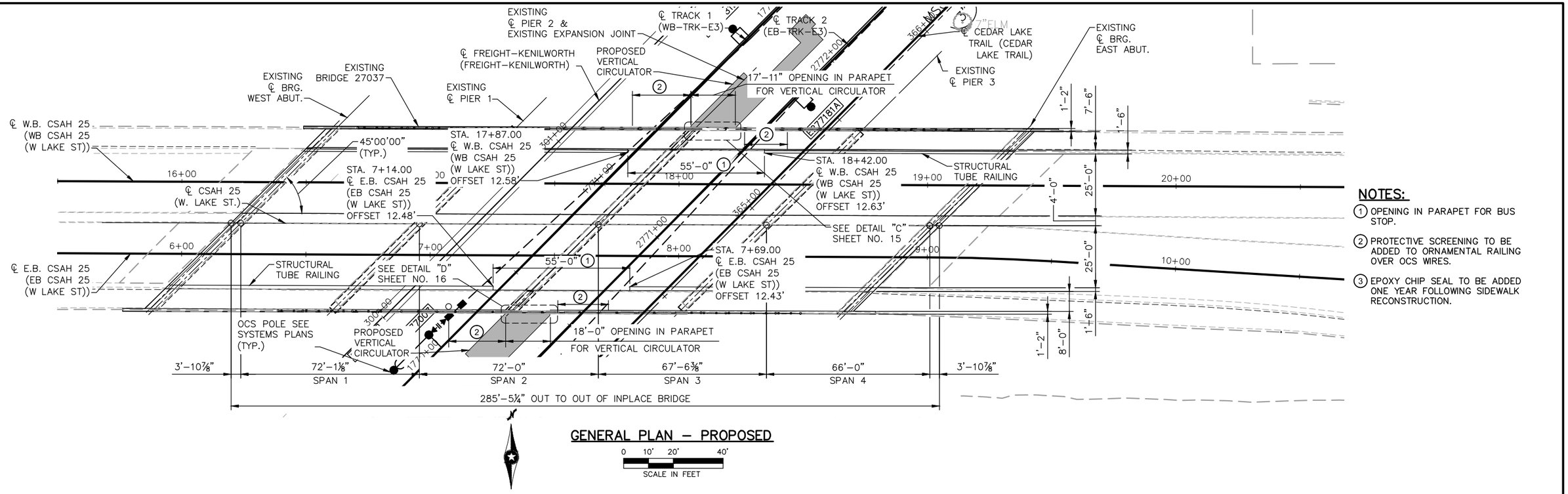

GENERAL PLAN – PROPOSED

0 10' 20' 40'
SCALE IN FEET

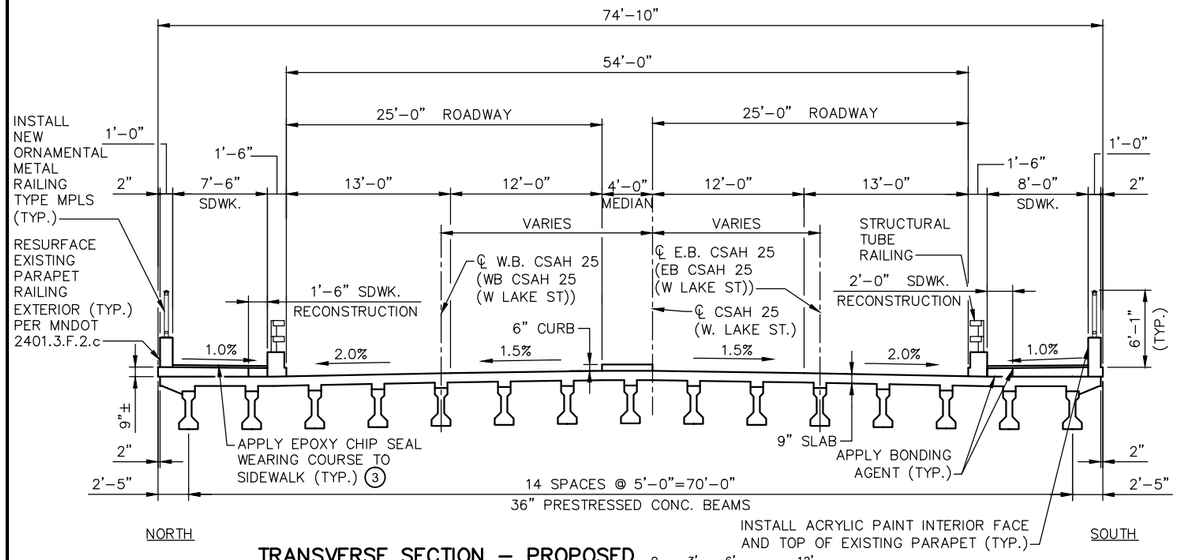

TRANSVERSE SECTION – PROPOSED SPAN 1 AND SPAN 2

0 3' 6' 12'
SCALE IN FEET

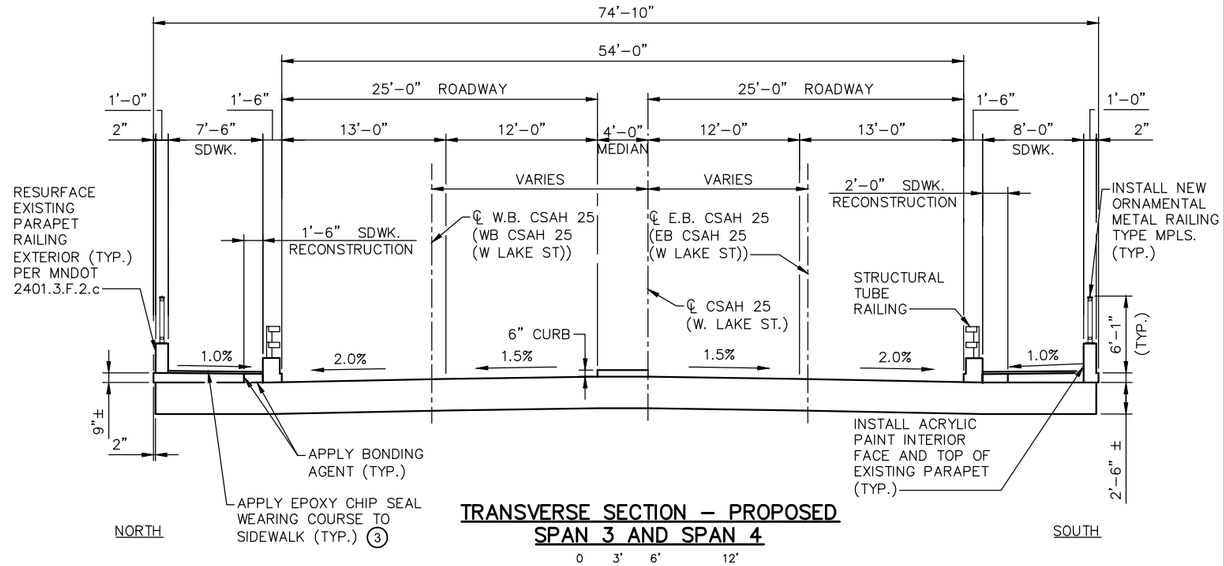

TRANSVERSE SECTION – PROPOSED SPAN 3 AND SPAN 4

0 3' 6' 12'
SCALE IN FEET

NO.	DATE	BY	CHECK	DESIGN	REVISION / SUBMITTAL

DESIGNED BY: JCW | CHECKED BY: SAD
DRAWN BY: JIK | CHECKED BY: SAD

AECOM Kimley»Horn

90% SUBMISSION - 01/22/16

METROPOLITAN COUNCIL

SOUTHWEST Green Line LRT Extension

CIVIL - VOLUME 4F
CSAH 25 (W LAKE ST) (BRIDGE 27037)
SUPERSTRUCTURE MODIFICATIONS
PROPOSED GENERAL PLAN AND SECTIONS

DISCIPLINE: STRUCTURES
SHEET NAME: CBR27037-BRM-GPE-002

SHEET 14 OF 24

Jan, 15 2016 09:24 am v:\3400_ADC\CAD\SEGMENT E3\PLAN SHEETS\STRUCTURES\BR27037 MODS\CBR27037-BRM-GPE-002.dwg By: Jim.Kimble

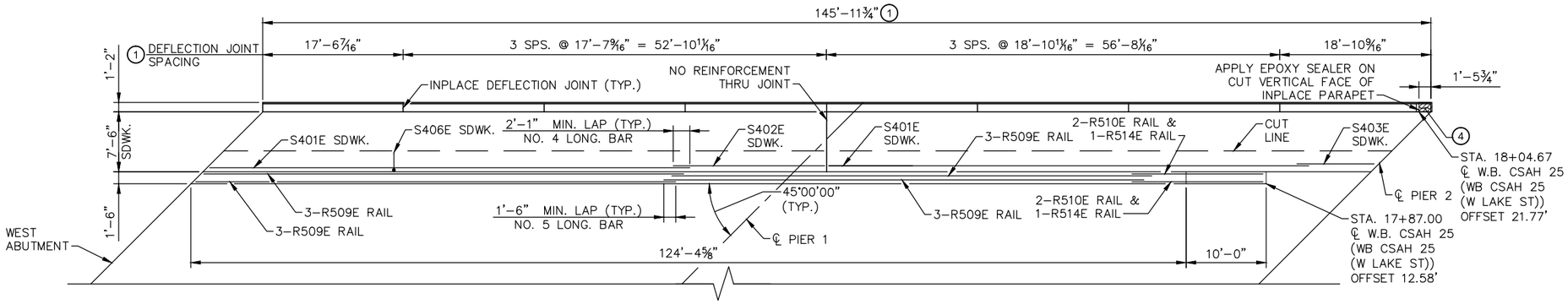

NORTH SIDEWALK PLAN
(WEST ABUTMENT TO PIER 2)

NOTES:

INPLACE TRANSVERSE, LONGITUDINAL, AND TIE SIDEWALK BARS NOT COMPLETELY EXPOSED TO REMAIN IN PLACE. CLEAN, STRAIGHTEN AND ADJUST AS REQUIRED. COMPLETELY EXPOSED BARS TO BE REMOVED AND DISPOSED OF.

(1) PER ORIGINAL BRIDGE PLAN DATED 12–13–90.

(2) PROPOSED ORNAMENTAL METAL RAILING TYPE MPLS NOT SHOWN FOR CLARITY SEE SHEET 9.

(3) STRUCTURAL TUBE RAILING NOT SHOWN FOR CLARITY, SEE SHEETS 10 & 11.

(4) SECTION OF INPLACE PARAPET TO BE REMOVED FOR VERTICAL CIRCULATOR.

(5) SPACE S406E TO MATCH INPLACE BARS FROM 1990 PLANS.

(6) SEE SHEET 14 FOR LOCATION. DETAIL "C" AND SECTION A–A APPLY TO NORTH SIDEWALK ONLY.

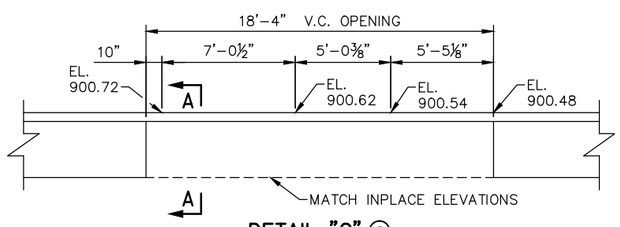

DETAIL "C" (6)

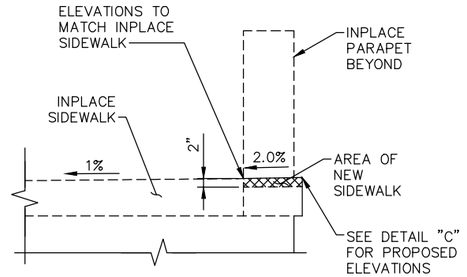

SECTION A–A (6)

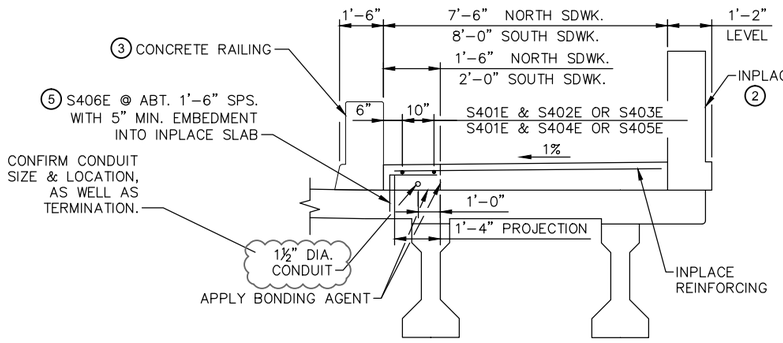

TRANSVERSE SECTION THRU SIDEWALK

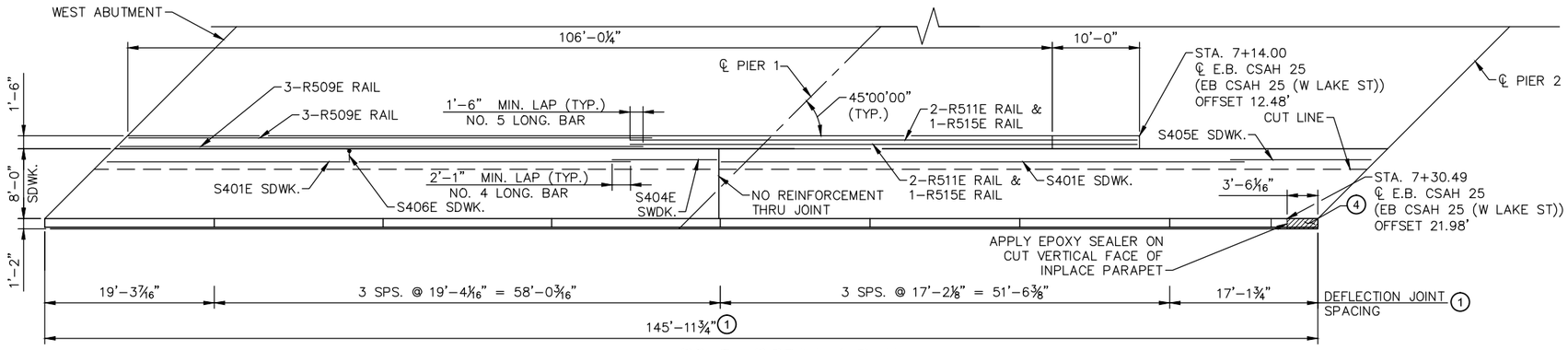

SOUTH SIDEWALK PLAN
(WEST ABUTMENT TO PIER 2)

NO.	DATE	BY	CHECK	DESIGN	REVISION / SUBMITTAL

DESIGNED BY: JCW | CHECKED BY: SAD
DRAWN BY: JIK | CHECKED BY: SAD

AECOM Kimley»Horn

90% SUBMISSION - 01/22/16

METROPOLITAN COUNCIL

SOUTHWEST Green Line LRT Extension

CIVIL - VOLUME 4F
CSAH 25 (W LAKE ST) (BRIDGE 27037)
SUPERSTRUCTURE MODIFICATIONS
SIDEWALK DETAILS & REINFORCEMENT 1

DISCIPLINE: STRUCTURES
SHEET NAME: CBR27037-BRM-DTL-002

SHEET 15 OF 24

Jan. 15 2016 09:25 am V:\3400_ADC\CAD\SEGMENT E3\PLAN SHEETS\STRUCTURES\BR27037 MODS\CBR27037-BRM-DTL-002.dwg By: Jim.Kimble

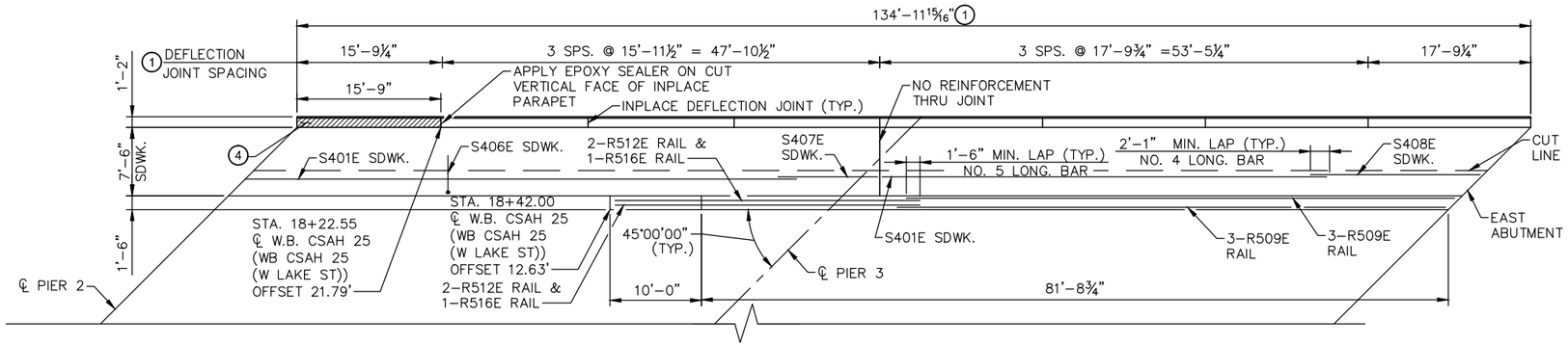

NORTH SIDEWALK PLAN
(PIER 2 TO EAST ABUTMENT)

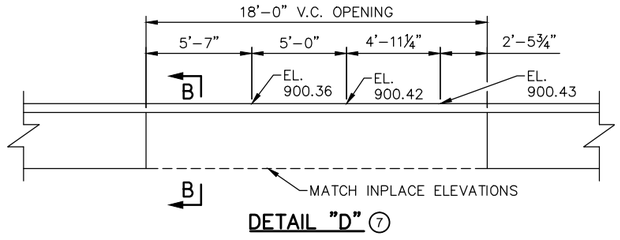

DETAIL "D" (7)

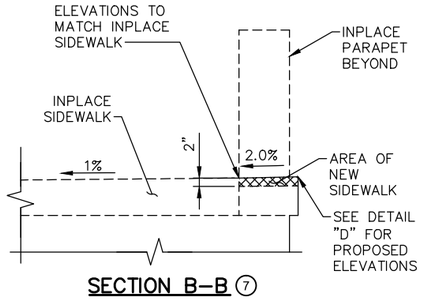

SECTION B–B (7)

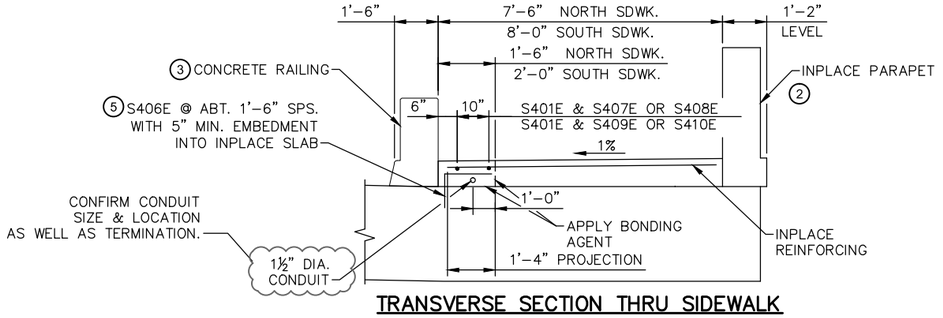

TRANSVERSE SECTION THRU SIDEWALK

NOTES:

INPLACE TRANSVERSE, LONGITUDINAL, AND TIE SIDEWALK BARS NOT COMPLETELY EXPOSED TO REMAIN IN PLACE. CLEAN, STRAIGHTEN AND ADJUST AS REQUIRED. COMPLETELY EXPOSED BARS TO BE REMOVED AND DISPOSED OF.

(1) PER ORIGINAL BRIDGE PLAN DATED 12–13–90.

(2) PROPOSED ORNAMENTAL METAL RAILING TYPE MPLS NOT SHOWN FOR CLARITY SEE SHEET 9.

(3) STRUCTURAL TUBE RAILING NOT SHOWN FOR CLARITY, SEE SHEETS 18 & 19.

(4) SECTION OF INPLACE PARAPET TO BE REMOVED FOR VERTICAL CIRCULATOR.

(5) SPACE S406E TO MATCH INPLACE BARS FROM 1990 PLANS.

(6) BILL OF REINFORCEMENT FOR SIDEWALK INCLUDES ALL REINFORCING FOR BOTH SIDEWALKS ON THE BRIDGE.

(7) SEE SHEET 14 FOR DETAIL LOCATION. DETAIL "D" AND SECTION B–B APPLY TO SOUTH SIDEWALK ONLY.

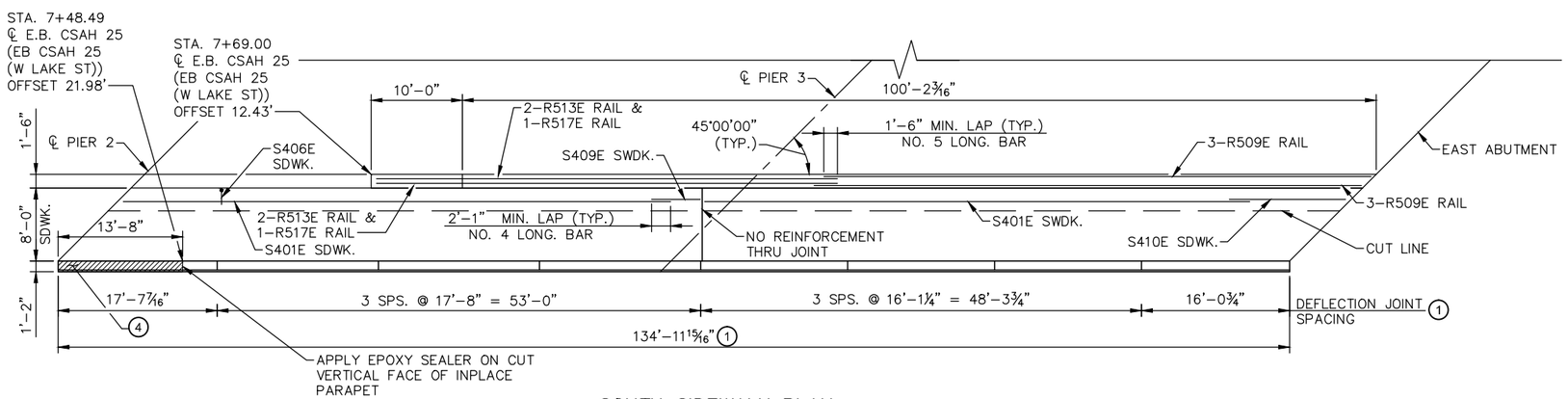

SOUTH SIDEWALK PLAN
(PIER 2 TO EAST ABUTMENT)

(6)

BILL OF REINFORCEMENT FOR SIDEWALK				
BAR	NO.	LENGTH	SHAPE	LOCATION
S401E	16	60'-0"	STR.	SIDEWALK LONGITUDINAL
S402E	2	19'-8"	STR.	SIDEWALK LONGITUDINAL
S403E	2	9'-10"	STR.	SIDEWALK LONGITUDINAL
S404E	2	11'-1"	STR.	SIDEWALK LONGITUDINAL
S405E	2	18'-6"	STR.	SIDEWALK LONGITUDINAL
S406E	380	1'-11"	BENT	SIDEWALK TIE
S407E	2	12'-11"	STR.	SIDEWALK LONGITUDINAL
S408E	2	5'-6"	STR.	SIDEWALK LONGITUDINAL
S409E	2	4'-5"	STR.	SIDEWALK LONGITUDINAL
S410E	2	14'-2"	STR.	SIDEWALK LONGITUDINAL

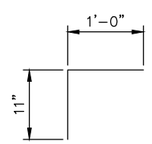

S406E

NO.	DATE	BY	CHECK	DESIGN	REVISION / SUBMITTAL

DESIGNED BY: JCW | CHECKED BY: SAD
DRAWN BY: JIK | CHECKED BY: SAD

AECOM Kimley»Horn

90% SUBMISSION - 01/22/16

METROPOLITAN COUNCIL

SOUTHWEST Green Line LRT Extension

CIVIL - VOLUME 4F
CSAH 25 (W LAKE ST) (BRIDGE 27037)
SUPERSTRUCTURE MODIFICATIONS
SIDEWALK DETAILS & REINFORCEMENT 2

DISCIPLINE: STRUCTURES
SHEET NAME: CBR27037-BRM-DTL-003

SHEET 16 OF 24

Jan. 15 2016 09:25 am V:\3400_ADC\CAD\SEGMENT E3\PLAN SHEETS\STRUCTURES\BR27037 MODS\CBR27037-BRM-DTL-003.dwg By: Jim.Kimble

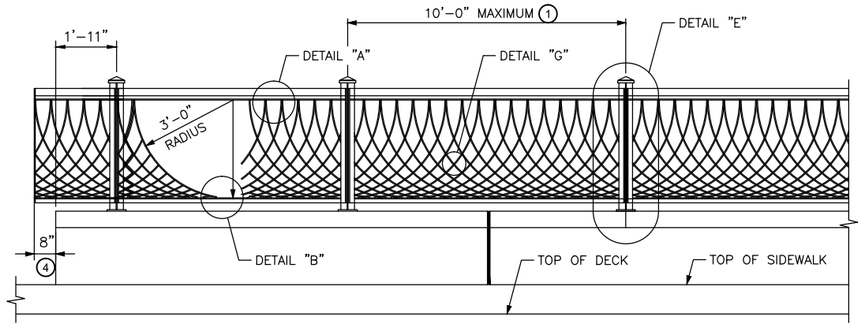

OUTSIDE ELEVATION

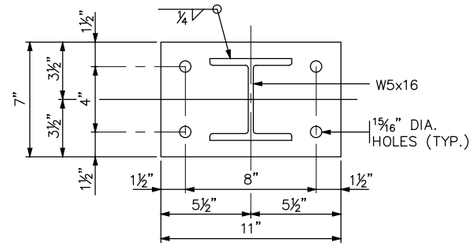

BASE PLATE PLAN

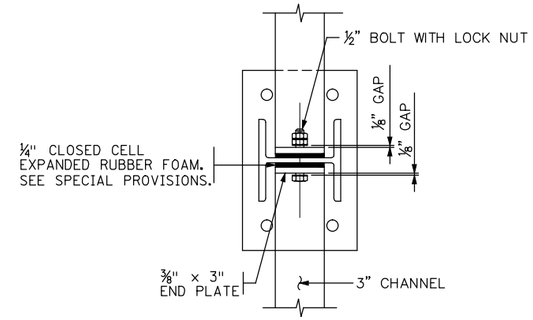

SECTION F-F

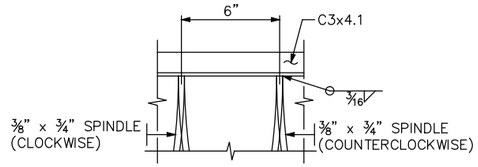

DETAIL "A"

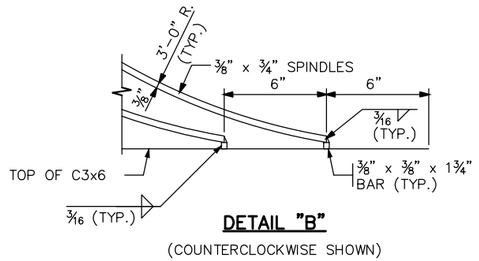

DETAIL "B"
(COUNTERCLOCKWISE SHOWN)

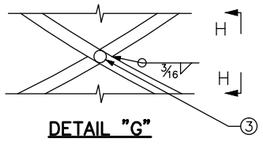

DETAIL "G"



SECTION H-H

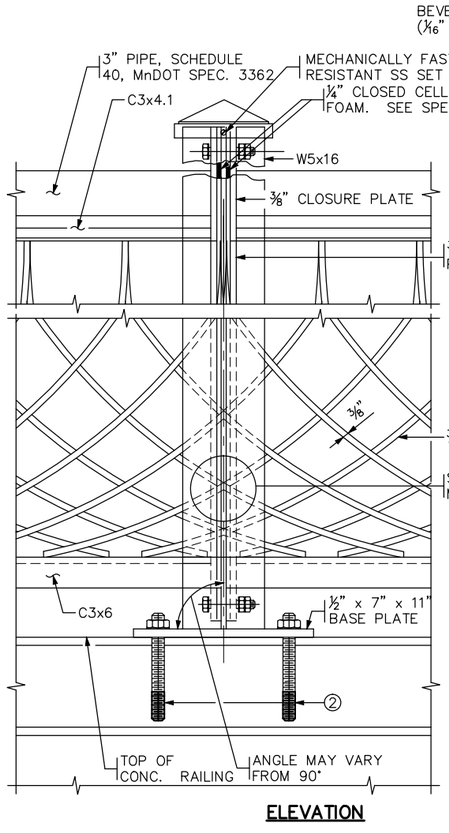

ELEVATION

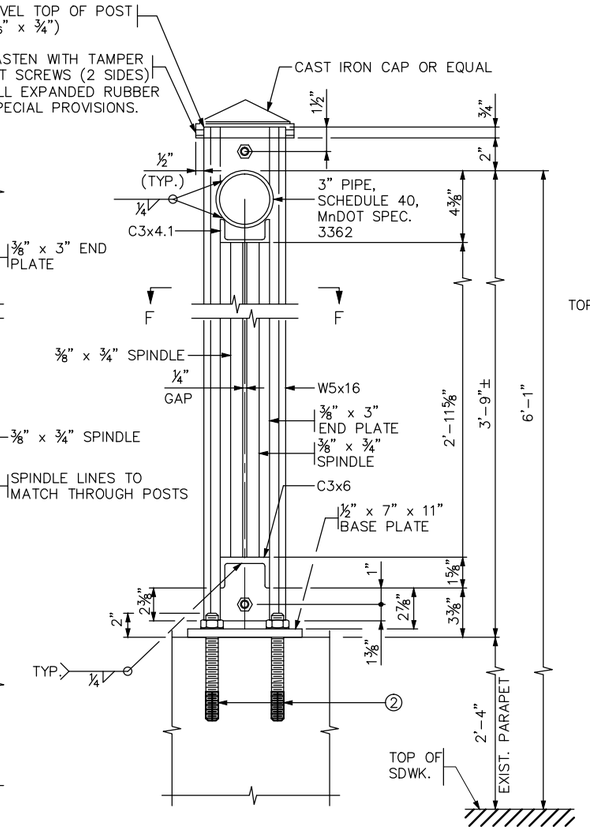

DETAIL "E"
(TYPICAL RAILPOST)

TYPICAL SECTION

NOTES:

WEIGHT OF METAL RAILING IS APPROXIMATELY 45 LBS./FT.

ALL POSTS TO BE VERTICAL.

⅜" x 3" END PLATES TO BE VERTICAL.

ALL STEEL SHALL COMPLY WITH Mn/DOT SPEC. 3306 UNLESS NOTED.

MECHANICALLY GALVANIZE BOLTS, NUTS AND WASHERS PER A.S.T.M. B695, CLASS 50.

SHOP APPLY PAINT IN ACCORDANCE WITH Mn/DOT SPEC. 2478. PAINT COLOR TO BE BLACK. SEE SPECIAL PROVISIONS FOR PAINT REQUIREMENTS.

(1) DISTANCE BETWEEN STEEL POSTS SHALL BE IN 6" INCREMENTS

(2) ⅝" DIA. CHEMICAL ANCHOR RODS, Mn/DOT SPEC. 3385, TYPE A, WITH HEX NUTS AND WASHERS. MINIMUM ULTIMATE BOND STRENGTH SHALL BE 20,000 POUNDS, WITH A MINIMUM 5" EMBEDMENT LENGTH. SEE SPECIAL PROVISIONS.

(3) WELD ¼" THICK x ⅜" DIA. SPACER AT ONE INTERSECTION PER BAR AT LOCATION SHOWN.

(4) RAILING TO OVERHANG VERTICAL CUT FOR VERTICAL CIRCULATOR BY 8".

NO.	DATE	BY	CHECK	DESIGN	REVISION / SUBMITTAL

DESIGNED BY: JCW | CHECKED BY: SAD
DRAWN BY: JIK | CHECKED BY: SAD

AECOM Kimley»Horn

90% SUBMISSION - 01/22/16

METROPOLITAN COUNCIL

SOUTHWEST Green Line LRT Extension

CIVIL - VOLUME 4F
CSAH 25 (W LAKE ST) (BRIDGE 27037)
SUPERSTRUCTURE MODIFICATIONS
ORNAMENTAL METAL RAILING

DISCIPLINE: STRUCTURES

SHEET NAME: CBR27037-BRM-DTL-004

SHEET 17 OF 24

Jan, 15 2016 09:25 am V:\3400_ADC\CAD\SEGMENT E3\PLAN SHEETS\STRUCTURES\BR27037 MODS\CBR27037-BRM-DTL-004.dwg By: Jim.Kimble

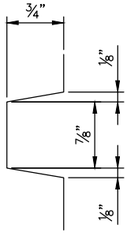

RAIL RUSTICATION

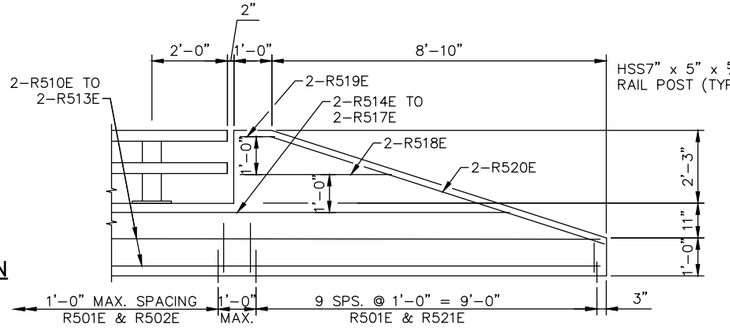

END RAIL ELEVATION

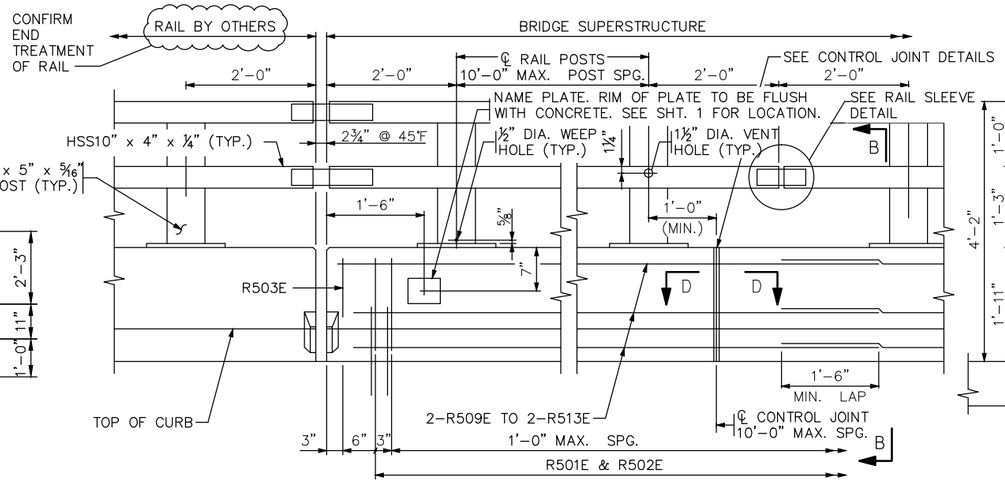

EXPANSION JOINT

DEVICE NOT SHOWN

INSIDE ELEVATION OF RAILING

CONCRETE WEARING COURSE NOT SHOWN

RAIL MEETS TEST LEVEL 4 REQUIREMENTS OF NCHRP REPORT 350

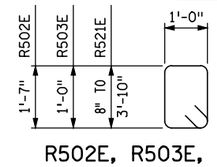

CONTROL JOINT

R502E, R503E, & R521E

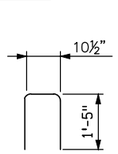

R501E

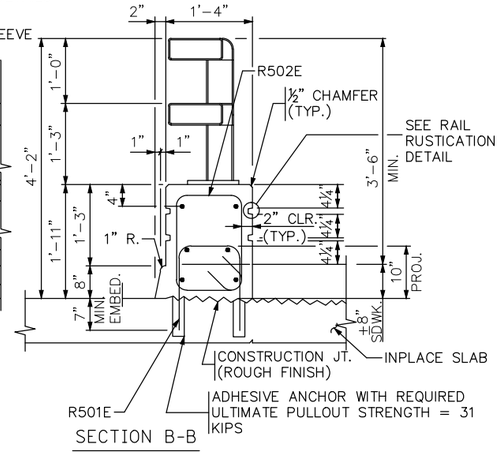

SECTION B-B

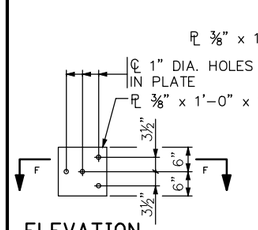

ELEVATION

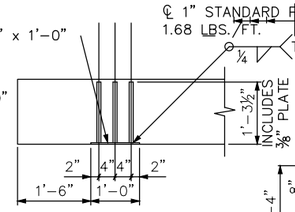

SECTION F-F

GUARDRAIL CONNECTION DETAIL

GALVANIZE AFTER FABRICATION PER Mn/DOT SPEC. 3394
ESTIMATED WEIGHT = 22 LBS.

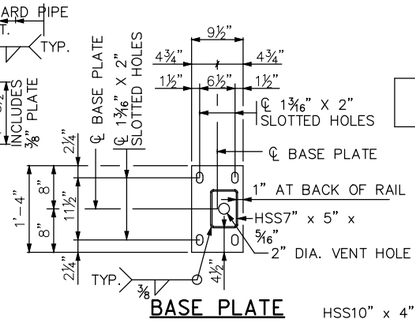

BASE PLATE

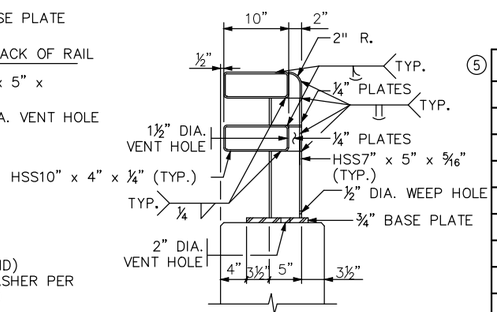

STRUCTURAL TUBE RAIL DETAIL

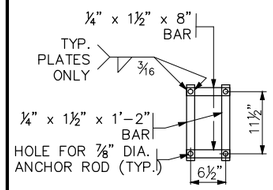

SECTION G-G

ANCHOR BAR ALTERNATE

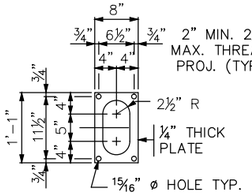

SECTION G-G

ANCHOR PLATE ALTERNATE

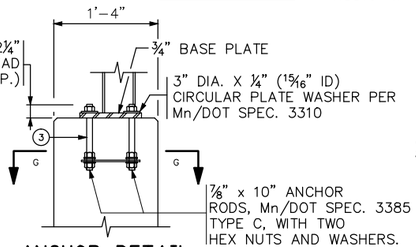

ANCHOR DETAIL

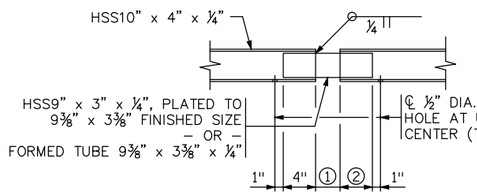

RAIL SLEEVE DETAIL

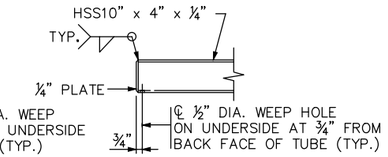

RAIL END DETAIL

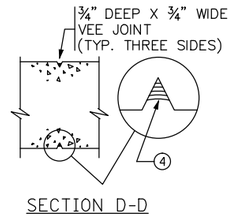

SECTION D-D

CONTROL JOINT DETAILS

BILL OF REINFORCEMENT FOR PARAPET ⑤

BAR	NO.	LENGTH	SHAPE	LOCATION
R501E	458	3'-9"	BENT	PARAPET VERTICAL
R502E	418	6'-1"	BENT	PARAPET VERTICAL
R503E	4	4'-11"	BENT	PARAPET VERTICAL
R509E	30	60'-0"	STR.	PARAPET LONGITUDINAL
R510E	4	17'-1"	STR.	PARAPET LONGITUDINAL
R511E	4	58'-9"	STR.	PARAPET LONGITUDINAL
R512E	4	34'-5"	STR.	PARAPET LONGITUDINAL
R513E	4	51'-5"	STR.	PARAPET LONGITUDINAL
R514E	2	15'-5"	STR.	PARAPET LONGITUDINAL
R515E	2	57'-2"	STR.	PARAPET LONGITUDINAL
R516E	2	32'-9"	STR.	PARAPET LONGITUDINAL
R517E	2	49'-9"	STR.	PARAPET LONGITUDINAL
R518E	8	4'-9"	STR.	PARAPET LONGITUDINAL
R519E	8	1'-11"	STR.	PARAPET LONGITUDINAL
R520E	8	9'-5"	STR.	PARAPET LONGITUDINAL
R521E	4 SER. OF 10	4'-3" TO 10'-7"	BENT	PARAPET VERICAL

GENERAL NOTES

~~FOR PAYMENT OF "BARRIER CONCRETE (3S52)" MEASURE LENGTH OF CONCRETE BARRIER BETWEEN END FACES. CONCRETE PARAPET = 396 LBS./FT. (0.098 CU. YDS./FT.)~~

~~FOR PAYMENT OF "STRUCTURAL TUBE RAILING" MEASURE LENGTH OF RAIL FROM END TO END OF TUBING. DO NOT DEDUCT FOR JOINTS.~~

FINISH ALL EDGES OF RAIL WITH ½" CHAMFER, EXCEPT WHERE OTHERWISE NOTED.

MAX. SPACING OF CONCRETE CONTROL JOINTS SHALL BE 10 FT.

PROVIDE CORRECT ALIGNMENT FOR ANCHORAGES BY PLACING THEM ACCURATELY AND NORMAL TO GRADE. SEE SPECIAL PROVISIONS.

PROVIDE STRUCTURAL STEEL AND PLATE WASHERS PER Mn/DOT SPEC. 3310. PROVIDE STRUCTURAL TUBES PER A.S.T.M. A500, GRADE B AS SPECIFIED IN Mn/DOT SPEC. 3361.

GALVANIZE BOLTS, NUTS, AND WASHERS PER Mn/DOT SPEC. 3392.

~~GALVANIZE ALL OTHER STRUCTURAL STEEL PER Mn/DOT SPEC. 3394, AFTER FABRICATION.~~

PROVIDE GUARDRAIL CONNECTION STRUCTURAL STEEL PER Mn/DOT SPEC. 3306.

ALL MATERIAL IN THE CONCRETE BARRIER IS LISTED IN SUMMARY OF QUANTITIES FOR SUPERSTRUCTURE.

ALL STRUCTURAL STEEL TO BE PAINTED BLACK. SEE SPECIAL PROVISIONS FOR PAINT REQUIREMENTS.

CONTINUOUSLY GROUND THE METAL RAILING AS DIRECTED IN THE SPECIAL PROVISIONS. REFER TO THE ELECTRICAL PLANS AND ELECTRICAL SPECIAL PROVISIONS FOR DETAILS REGARDING BONDING MULTIPLE ELECTRICAL GROUNDING SYSTEMS.

① 1" AT RAILING JOINTS. AT EXPANSION JOINTS, MAKE 1" LARGER THAN GAP IN EXPANSION JOINTS.

② 5" AT RAILING JOINTS AND 8" AT EXPANSION JOINTS.

③ SUBSTITUTION OF CHEMICAL ANCHOR RODS FOR CAST–IN–PLACE ANCHORAGE IS NOT PERMITTED.

④ SEE SPECIAL PROVISIONS FOR JOINT SEALING REQUIREMENTS.

⑤ BILL OF REINFORCEMENT FOR PARAPET INCLUDES ALL REINFORCING FOR ALL PARAPETS ON BRIDGE.

NO.	DATE	BY	CHECK	DESIGN	REVISION / SUBMITTAL

DESIGNED BY: JCW CHECKED BY: SAD

DRAWN BY: JIK CHECKED BY: SAD

AECOM Kimley»Horn

90% SUBMISSION - 01/22/16

METROPOLITAN COUNCIL

SOUTHWEST Green Line LRT Extension

CIVIL - VOLUME 4F
CSAH 25 (W LAKE ST) (BRIDGE 27037)
SUPERSTRUCTURE MODIFICATIONS
STRUCTURAL TUBE RAILING DETAILS

DISCIPLINE: STRUCTURES

SHEET NAME: CBR27037-BRM-DTL-005

SHEET 18 OF 24

Jan, 15 2016 09:26 am v:\3400_ADC\CAD\SEGMENT E3\PLAN SHEETS\STRUCTURES\BR27037 MODS\CBR27037-BRM-DTL-005.dwg By: Jim.Kimble

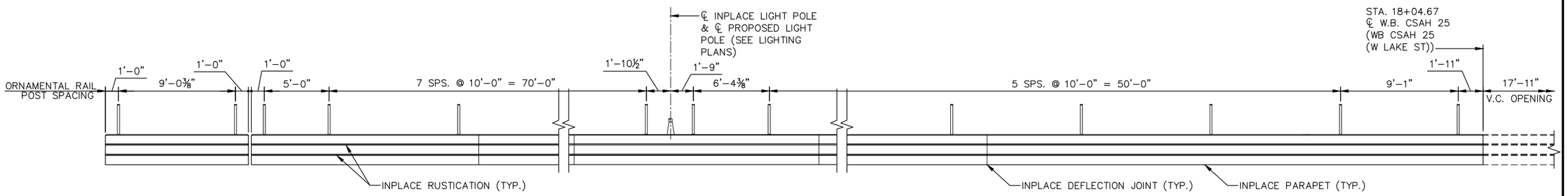

NORTH RAIL (WEST ABUT. TO PIER 2)

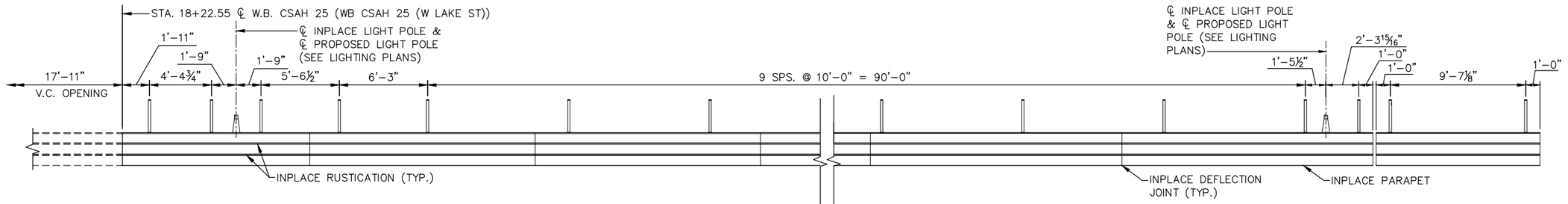

NORTH RAIL (PIER 2 TO EAST ABUT.)

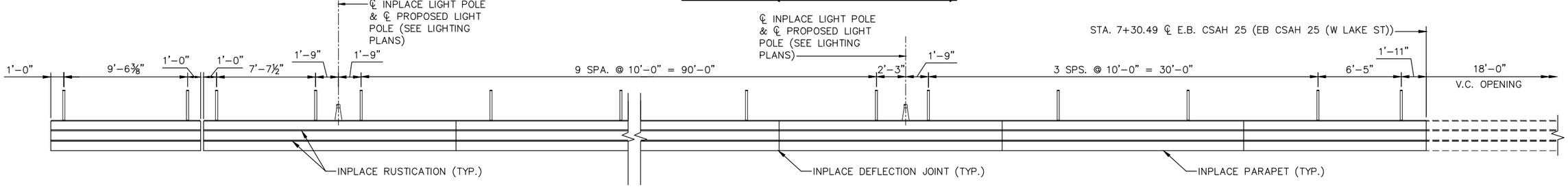

SOUTH RAIL (WEST ABUT. TO PIER 2)

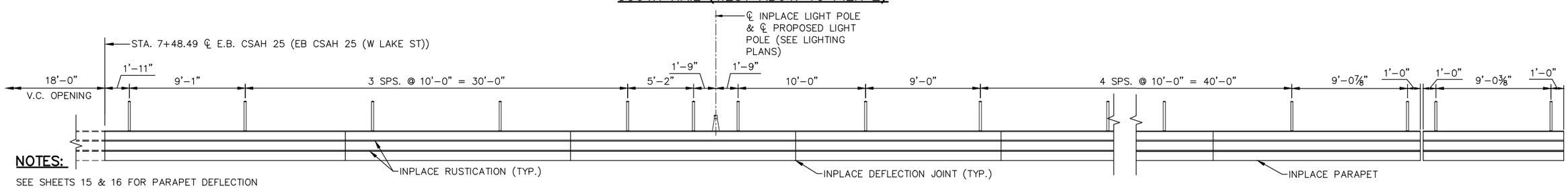

NOTES:

SEE SHEETS 15 & 16 FOR PARAPET DEFLECTION JOINT SPACING.

ORNAMENTAL METAL RAILING HORIZONTAL RAILS AND SPINDLES NOT SHOWN FOR CLARITY.

SOUTH RAIL (PIER 2 TO EAST ABUT.)

NO.	DATE	BY	CHECK	DESIGN	REVISION / SUBMITTAL

DESIGNED BY: JCW | CHECKED BY: SAD
DRAWN BY: JIK | CHECKED BY: SAD

AECOM Kimley»Horn

90% SUBMISSION - 01/22/16

METROPOLITAN COUNCIL

SOUTHWEST Green Line LRT Extension

CIVIL - VOLUME 4F
CSAH 25 (W LAKE ST) (BRIDGE 27037)
SUPERSTRUCTURE MODIFICATIONS
ORNAMENTAL METAL RAILING ELEVATIONS

DISCIPLINE: STRUCTURES
SHEET NAME: CBR27037-BRM-DTL-006

SHEET 19 OF 24

Jan. 15 2016 09:26 am V:\3400_ADC\CAD\SEGMENT E3\PLAN SHEETS\STRUCTURES\BR27037 MODS\CBR27037-BRM-DTL-006.dwg By: Jim.Kimble

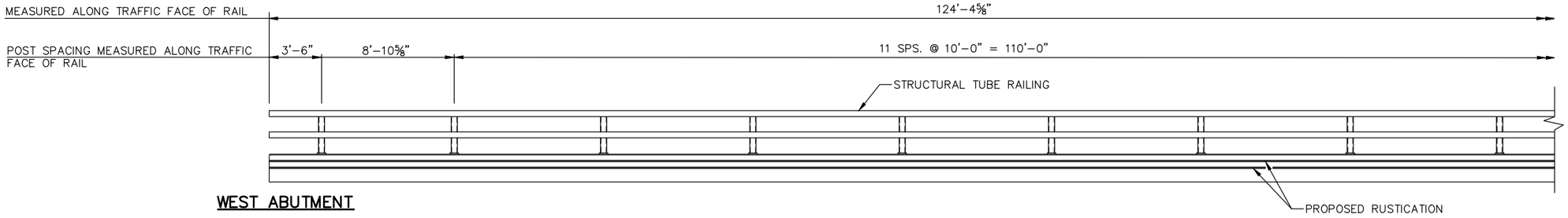

WEST ABUTMENT

PROPOSED CONCRETE RAILING ELEVATION
(NORTH RAIL)

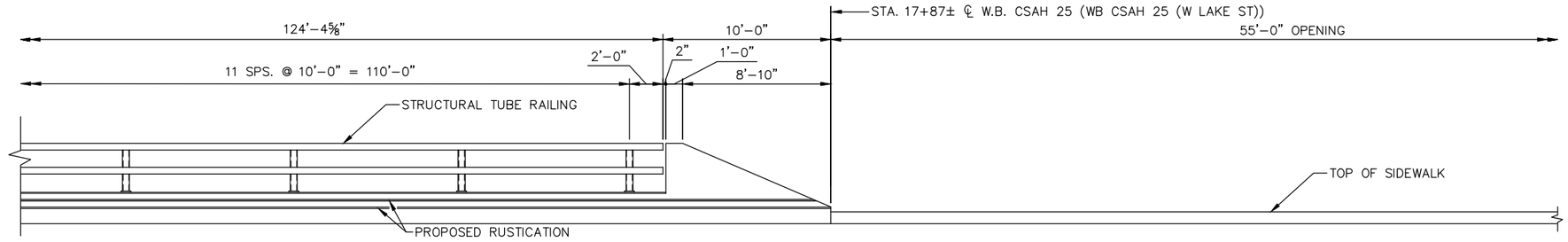

PROPOSED CONCRETE RAILING ELEVATION
(NORTH RAIL)

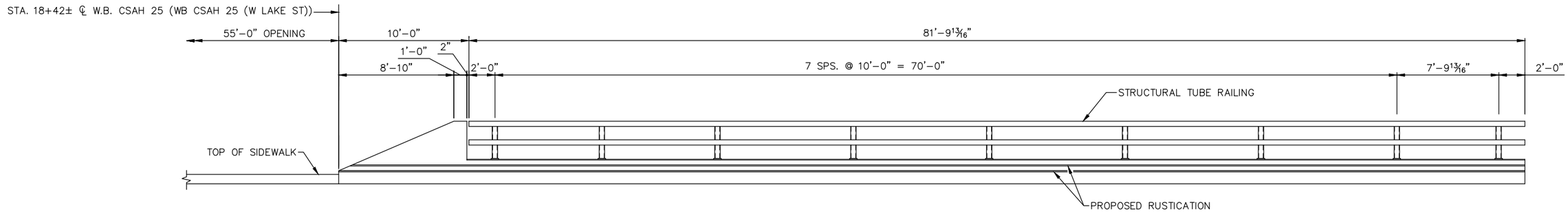

EAST ABUTMENT

PROPOSED CONCRETE RAILING ELEVATION
(NORTH RAIL)

NO.	DATE	BY	CHECK	DESIGN	REVISION / SUBMITTAL

DESIGNED BY: JCW | CHECKED BY: SAD
DRAWN BY: JIK | CHECKED BY: SAD

AECOM Kimley»Horn

90% SUBMISSION - 01/22/16

METROPOLITAN COUNCIL

SOUTHWEST Green Line LRT Extension

CIVIL - VOLUME 4F
CSAH 25 (W LAKE ST) (BRIDGE 27037)
SUPERSTRUCTURE MODIFICATIONS
NORTH RAIL ELEVATIONS

DISCIPLINE: STRUCTURES
SHEET NAME: CBR27037-BRM-DTL-007

SHEET 20 OF 24

Jan, 15 2016 09:27 am V:\3400_ADC\CAD\SEGMENT E3\PLAN SHEETS\STRUCTURES\BR27037 MODS\CBR27037-BRM-DTL-007.dwg By: Jim.Kimble

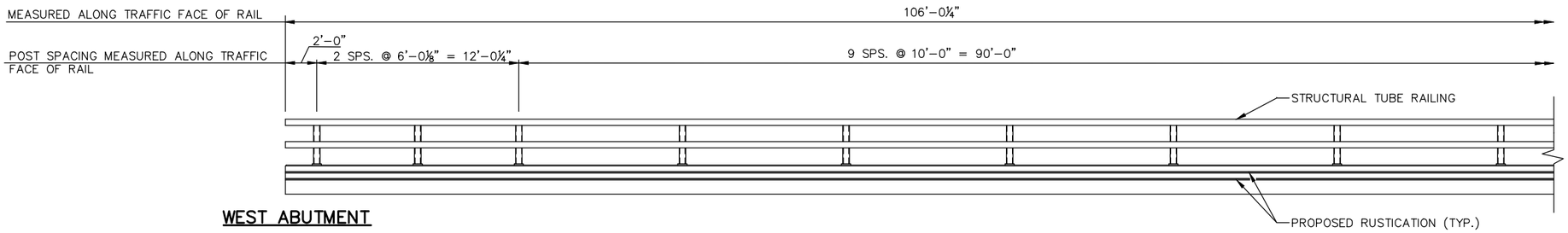

WEST ABUTMENT

PROPOSED CONCRETE RAILING ELEVATION
(SOUTH RAIL)

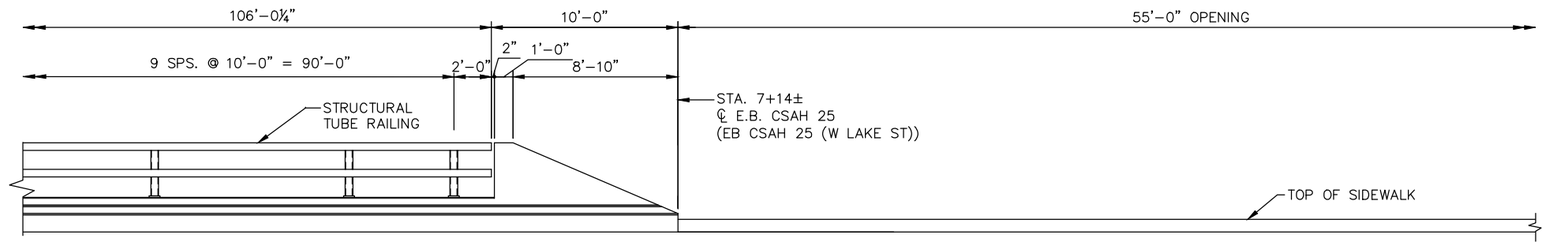

PROPOSED CONCRETE RAILING ELEVATION
(SOUTH RAIL)

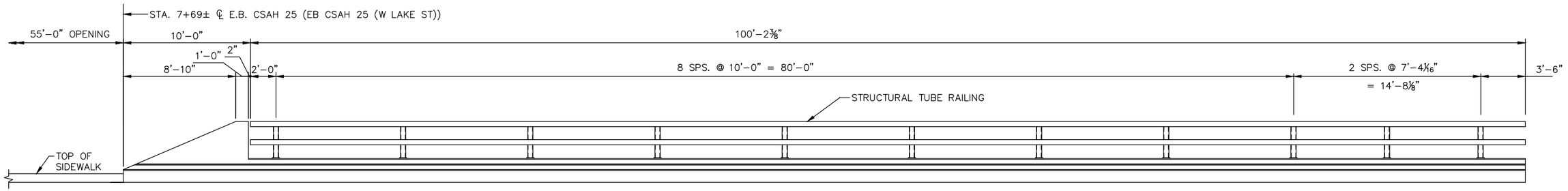

EAST ABUTMENT

PROPOSED CONCRETE RAILING ELEVATION
(SOUTH RAIL)

NO.	DATE	BY	CHECK	DESIGN	REVISION / SUBMITTAL

DESIGNED BY: JCW CHECKED BY: SAD
DRAWN BY: JIK CHECKED BY: SAD

AECOM Kimley»Horn

90% SUBMISSION - 01/22/16

METROPOLITAN COUNCIL

SOUTHWEST Green Line LRT Extension

CIVIL - VOLUME 4F
CSAH 25 (W LAKE ST) (BRIDGE 27037)
SUPERSTRUCTURE MODIFICATIONS
SOUTH RAIL ELEVATIONS

DISCIPLINE: STRUCTURES
SHEET NAME: CBR27037-BRM-DTL-008

SHEET 21 OF 24

Jan. 15 2016 09:27 am V:\3400_ADC\CAD\SEGMENT E3\PLAN SHEETS\STRUCTURES\BR27037 MODS\CBR27037-BRM-DTL-008.dwg By: Jim.Kimble

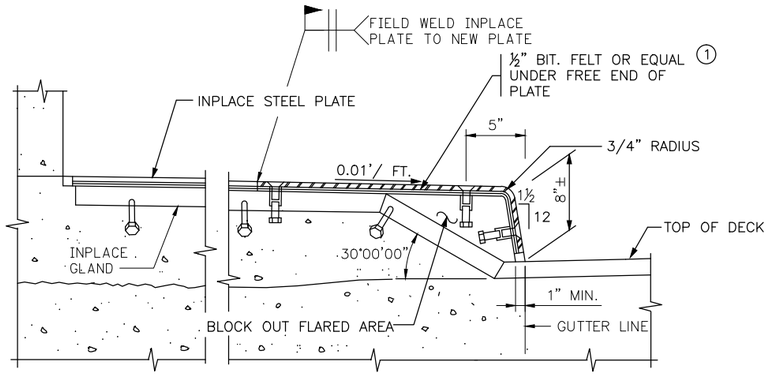

SECTION THROUGH RAISED SIDEWALK – OPTION 1

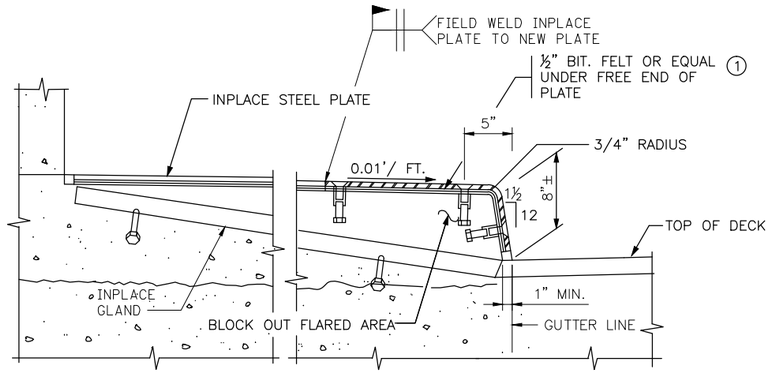

SECTION THROUGH RAISED SIDEWALK – OPTION 2

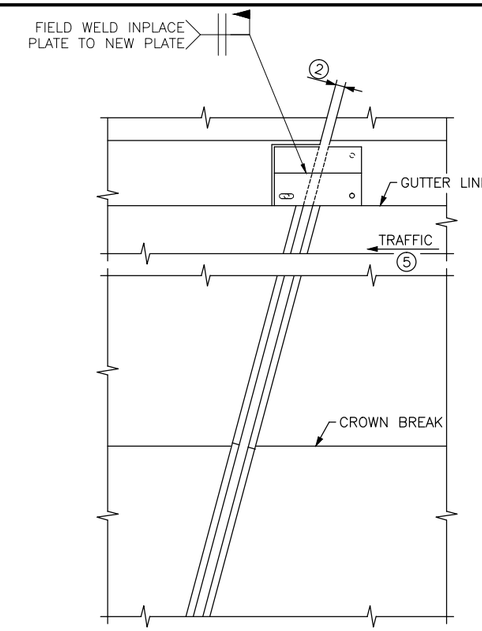

PLAN VIEW @ EXPANSION DEVICE

WITH STRAIGHT DEVICE

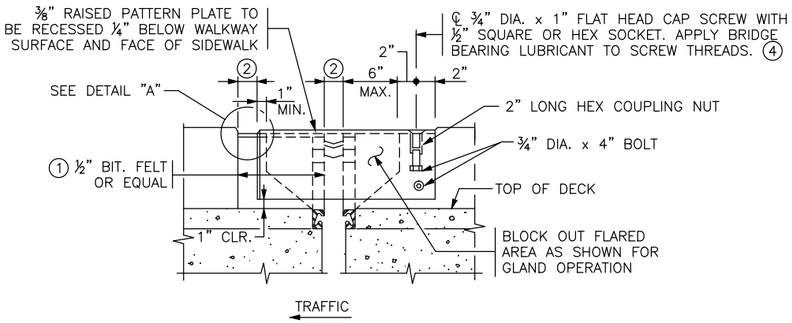

ELEVATION

RAISED SIDEWALK DETAILS

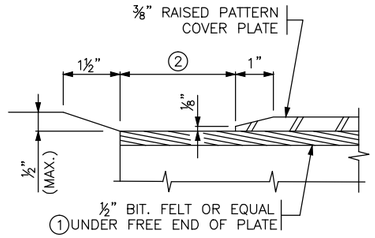

DETAIL "A"

GENERAL NOTES

¾" DIA. X 1" FLAT HEAD CAP SCREW WITH ½" SQUARE OR HEX SOCKET PER SPEC 3391. CAP SCREWS SHALL BE COUNTERSUNK 1/16" BELOW TOP OF PLATE. APPLY BRIDGE BEARING LUBRICANT TO SCREW THREADS. ④

GALVANIZE STRUCTURAL STEEL AFTER FABRICATION AS PER SPEC. 3394. GALVANIZE FASTENERS AS PER SPEC. 3392.

STRUCTURAL STEEL SHALL COMPLY WITH SPEC. 3306 OR SPEC. 3309.

BOND AND GROUND THE CONDUIT SYSTEM IN ACCORDANCE WITH THE APPLICABLE PORTIONS OF MnDOT SPEC 2545.3R.

① USE LARGEST SINGLE PIECE POSSIBLE. USE OF SMALL PIECES OR SCRAPS SECURED TOGETHER IS PROHIBITED.

② 2¾" @ 45° F.

③ ⅛" (¼" MAX.).

④ LUBRICANT PER MnDOT APPROVED/QUALIFIED PRODUCTS LIST: BRIDGE – BRIDGE BEARING LUBRICANT.

⑤ SEE SHEET NO. 11 FOR DIRECTION OF TRAFFIC.

NO.	DATE	BY	CHECK	DESIGN	REVISION / SUBMITTAL

DESIGNED BY: JCW | CHECKED BY: SAD

DRAWN BY: JIK | CHECKED BY: SAD

AECOM Kimley»Horn

90% SUBMISSION - 01/22/16

METROPOLITAN COUNCIL

SOUTHWEST Green Line LRT Extension

CIVIL - VOLUME 4F
CSAH 25 (W LAKE ST) (BRIDGE 27037)
SUPERSTRUCTURE MODIFICATIONS
SIDEWALK MODIFICATION DETAILS

DISCIPLINE: STRUCTURES

SHEET NAME: CBR27037-BRM-DTL-009

SHEET 22 OF 24

Jan, 15 2016 09:28 am v:\3400_ADC\CAD\SEGMENT E3\PLAN SHEETS\STRUCTURES\BR27037 MODS\CBR27037-BRM-DTL-009.dwg By: Jim.Kimble

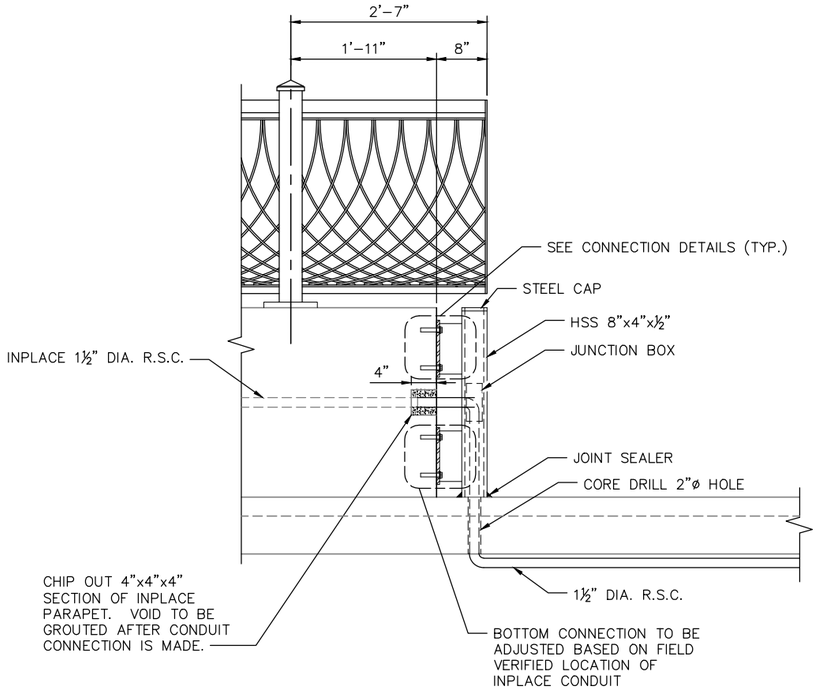

CONDUIT DETAIL – ELEVATION

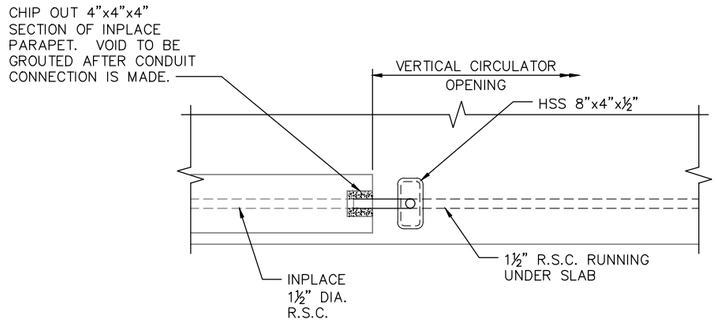

CONDUIT DETAIL – PLAN

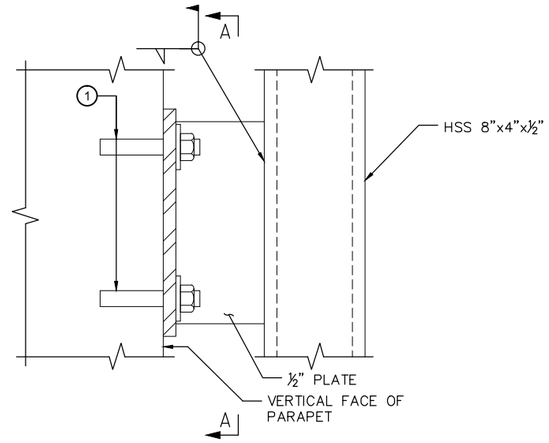

CONNECTION DETAIL

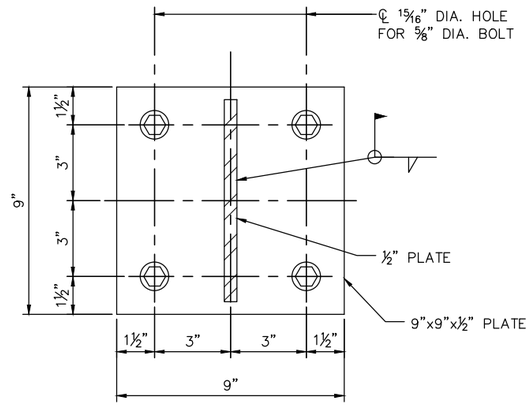

SECTION A–A BASE PLATE

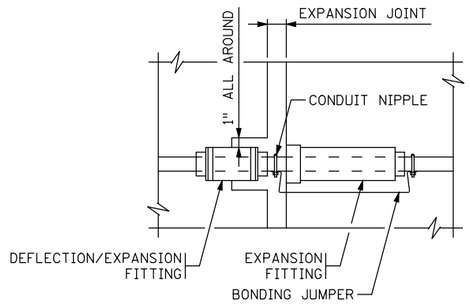

COMBINATION DEFLECTION/EXPANSION FITTING

NOTES:

CUT OFF FLOW OF ELECTRICITY BEFORE ANY WORK IS STARTED.

CARE SHALL BE TAKEN NOT TO DAMAGE INPLACE CONDUIT DURING REMOVAL OF INPLACE PARAPET.

BOND AND GROUND THE CONDUIT SYSTEM IN ACCORDANCE WITH THE APPLICABLE PORTIONS OF MnDOT SPEC. 2545.3R.

STRUCTURAL STEEL PER SPEC. 3309. STRUCTURAL TUBES ARE ASTM A500, GRADE B PER SPEC. 3361. FASTENERS PER SPEC. 3391.214.

GALVANIZE BOLTS, NUTS, AND WASHERS PER SPEC. 3392, STRUCTURAL STEEL SHAPES PER SPEC. 3394 AFTER FABRICATION.

(1) ADHESIVE ANCHORAGE WITH ⅝" DIA. ANCHOR ROD PER SPEC. 3385, TYPE A WITH HEX HEAD NUT AND WASHER. PROVIDE AN ADHESIVE WITH A MINIMUM CHARACTERISTIC BOND STRENGTH IN UNCRACKED CONCRETE OF 2.0 KSI. EMBED THE ANCHORAGE NO LESS THAN 4" REGARDLESS OF CHARACTERISTIC BOND STRENGTH. DRILL THROUGH REINFORCEMENT (IF ENCOUNTERED) TO ACHIEVE MINIMUM EMBEDMENT. ENSURE HEX NUT IS IN CONTACT WITH THE ADJACENT SURFACE AND TORQUE TO 60 FT–LBS UNLESS A HIGHER TORQUE IS RECOMMENDED BY THE MANUFACTURER. PROOF LOAD TO 5 KIPS. THE ADHESIVE SHALL HAVE A MINIMUM ULTIMATE PULL–OUT STRENGTH OF 10.0 KIPS.

NO.	DATE	BY	CHECK	DESIGN	REVISION / SUBMITTAL

DESIGNED BY: JCW | CHECKED BY: SAD
DRAWN BY: JIK | CHECKED BY: SAD

AECOM Kimley»Horn

90% SUBMISSION - 01/22/16

METROPOLITAN COUNCIL

SOUTHWEST Green Line LRT Extension

CIVIL - VOLUME 4F
CSAH 25 (W LAKE ST) (BRIDGE 27037)
SUPERSTRUCTURE MODIFICATIONS
CONDUIT SYSTEM

DISCIPLINE: STRUCTURES
SHEET NAME: CBR27037-BRM-DTL-010

SHEET 23 OF 24

Jan. 15 2016 09:28 am V:\3400_ADC\CAD\SEGMENT E3\PLAN SHEETS\STRUCTURES\BR27037 MODS\CBR27037-BRM-DTL-010.dwg By: Jim.Kimble

CONCRETE WEARING COURSE

☐ LOW SLUMP

☐ OTHER _____
TYPE OR MANUFACTURER

EXPANSION JOINTS

JOINT MANUFACTURER

MANUFACTURER'S IDENTIFICATION _____
MFR'S No. AND/OR LETTER DESIGNATION FOR JOINT USED

GLAND MANUFACTURER _____
NAME AND ADDRESS (CITY, STATE)

SIZE OF GLAND _____

MANUFACTURER'S IDENTIFICATION _____
MFR'S No. AND/OR LETTER DESIGNATION FOR GLAND USED

ELASTOMERIC BEARING PADS

PAD MANUFACTURER _____
NAME AND ADDRESS (CITY, STATE)

SPECIAL SURFACE FINISH

SYSTEM: _____ COLOR: _____

FINISHING ROADWAY FACES OF BARRIER RAILING

TYPE: _____ COLOR: _____

ANTI-GRAFFITI COATING

MANUFACTURER _____
NAME AND ADDRESS (CITY, STATE)

PRODUCT NAME: _____ LOCATION: _____

PAINT SYSTEM

Mn/DOT SPECIFICATION NUMBER _____
2478 OR 2479 OR OTHER

MANUFACTURER _____
NAME AND ADDRESS (CITY, STATE)

PRIME COAT _____
Mn/DOT MATERIAL SPECIFICATION NUMBER

INTERMEDIATE COAT _____
Mn/DOT MATERIAL SPECIFICATION NUMBER

FINISH COAT _____ _____
Mn/DOT MATERIAL SPECIFICATION NUMBER COLOR

PLAN QUALITY

RATE 1 (AGREE), 2 (NEUTRAL), OR 3 (DISAGREE, PLEASE COMMENT BELOW)

DIMENSIONING AND DETAILING ADEQUATELY DESCRIBED REQUIRED CONSTRUCTION. _____
BAR LISTS AND QUANTITIES WERE TYPICALLY COMPLETE AND FREE OF ERRORS. _____
SCALE OF DRAWINGS AND OVERALL LEGIBILITY OF LINES AND TEXT WAS GOOD. _____
(SB) SPECIAL PROVISIONS ADEQUATELY DESCRIBED SPECIAL WORK AND PAYMENT. _____

COMMENTS: _____

NUMBER OF BRIDGE
SUPPLEMENTAL AGREEMENTS: _____ COST: $ _____

LIST SIGNIFICANT ERRORS OR OMISSIONS IN PLAN DETAILS OR PAY QUANTITIES IN THE SPACE PROVIDED AT RIGHT.

BRIDGE REMOVAL / BRIDGE OPENING

NUMBER OF AND DATE OLD BRIDGE WAS REMOVED (IF APPLICABLE):

BRIDGE NUMBER _____ DATE REMOVED _____

DATE NEW BRIDGE WAS OPENED TO TRAFFIC _____

NOTIFY THE BRIDGE OFFICE BRIDGE MANAGEMENT UNIT WITH THIS INFORMATION AS SOON AS POSSIBLE. (651) 366-4557

OTHER ITEMS ①

① UTILITIES ADDED DURING CONSTRUCTION AND SPECIALTY ITEMS.

FINAL QUANTITIES ENTERED ON SCHEDULE OF QUANTITIES: YES ☐ NO ☐

SUMMARY OF SIGNIFICANT AS-BUILT CHANGES

THE AS-BUILT INFORMATION WAS ADDED TO THE PLAN BY:

_____ _____
INSPECTOR(S) SIGNATURE DATE

CHECKED BY: _____ _____
PROJECT ENGINEER/SUPERVISOR SIGNATURE DATE

AT THE TIME OF THE FINAL, THIS COMPLETED AS-BUILT BRIDGE DATA SHEET MUST BE SUBMITTED TO THE BRIDGE OFFICE - ATTN: REGIONAL CONSTRUCTION ENGINEER (MS610).

REVISION: 10-28-2008

APPROVED: SEPTEMBER 26, 2003
Daniel L Hanson
STATE BRIDGE ENGINEER

AS-BUILT DETAILS
(AS NEEDED)

FIG. 5-397.900

TITLE:	DES:	DR:	APPROVED:	BRIDGE NO.
AS-BUILT BRIDGE DATA	CHK:	CHK:		27037
	SHEET NO. 24 OF 24 SHEETS			

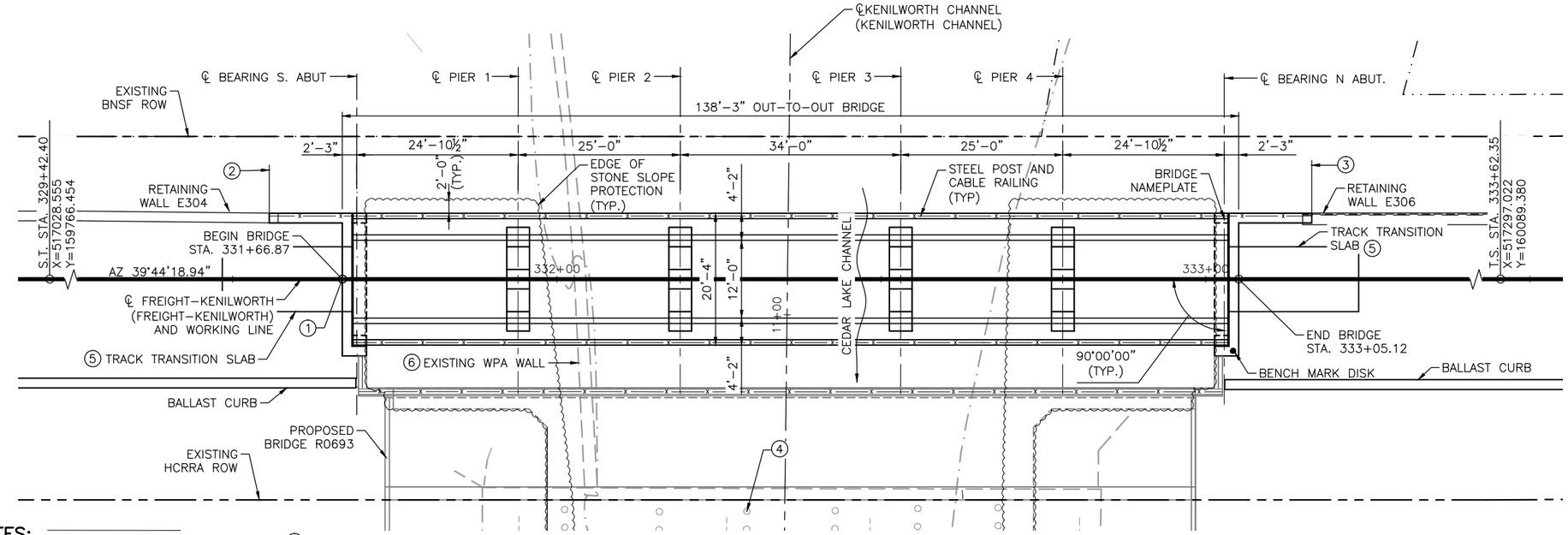

NOTES:

SEE BRIDGE SURVEY SHEET FOR IN PLACE UTILITIES.

SEE STAGING PLANS FOR SOE.

HATCHED AREA TO BE REMOVED.

① CONTROL POINT 1
℄ FREIGHT–KENILWORTH STA. 331+66.87
X = 517172.055
Y = 159939.064

② END OF RETAINING WALL E304 AND BEGIN SW WINGWALL AT F.F. WINGWALL FREIGHT–KENILWORTH (FREIGHT–KENILWORTH)
STA. 331+55.62
X = 517157.045
Y = 159936.912

GENERAL PLAN

0 5' 10' 20'

SCALE IN FEET

③ END OF RETAINING NW WINGWALL AND BEGIN RETAINING WALL E306 AT F.F. WINGWALL FREIGHT–KENILWORTH (FREIGHT–KENILWORTH)
STA. 333+16.37
X = 517259.811
Y = 160060.524

④ IN PLACE BRIDGE 27A43, A 45'–8" WIDE X 92'–0" LONG TIMBER FREIGHT AND TRAIL BRIDGE TO BE REMOVED. SEE STAGING PLANS FOR REMOVAL NOTES.

⑤ SEE TRACK PLANS FOR TRANSITION SLAB DETAILS.

⑥ SEE STAGING PLANS FOR LIMITS OF WPA WALL REMOVAL AND RECONSTRUCTION.

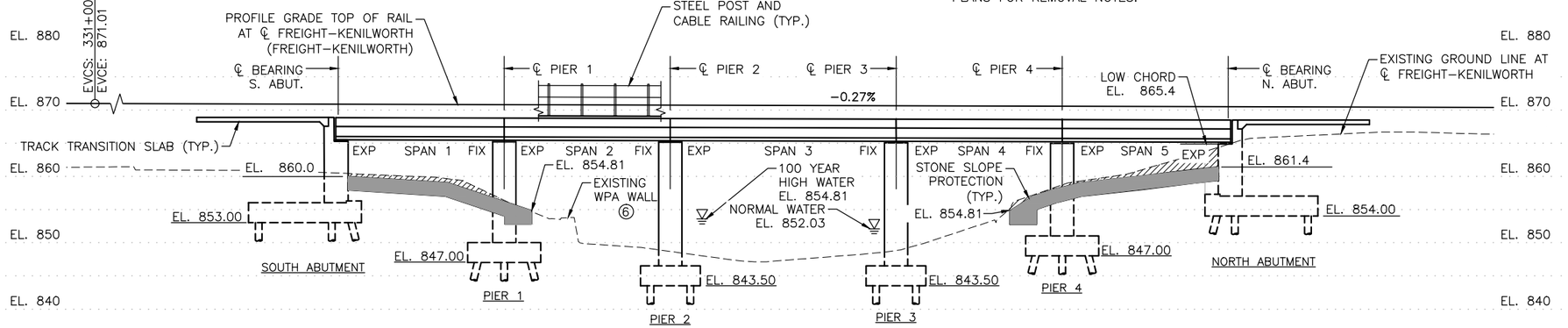

GENERAL ELEVATION

0 5' 10' 20'

SCALE IN FEET

DESIGN DATA

2014 AREMA MANUAL FOR RAILWAY ENGINEERING

SOUTHWEST LIGHT RAIL TRANSIT DESIGN CRITERIA (REVISION 4.0)

COOPER E100 LIVE LOAD

MAXIMUM BALLAST DEPTH: 2'–0" (FOR DESIGN)

LOAD FACTOR DESIGN METHOD

MATERIAL DESIGN PROPERTIES:

REINFORCED CONCRETE:
f'c = 4500 PSI n = 8
fy = 60000 PSI REINFORCEMENT

PRESTRESSED CONCRETE:
f'c = 6000 PSI n = 6
fpu = 270 KSI LOW RELAXATION STRANDS
0.75 x fpu FOR INITIAL PRESTRESS

DESIGN SPEED: OVER = 25 MPH (FRT)
UNDER = N. A.

APPROXIMATE DECK AREA = 2811 SQ. FT.

LIST OF SHEETS

NO.	DESCRIPTION
1	GENERAL PLAN AND ELEVATION
2	TRANSVERSE SECTION & QUANTITIES
3	BRIDGE LAYOUT
4–7	SOUTH ABUTMENT DETAILS
8–12	SOUTH ABUTMENT REINFORCEMENT
13–16	NORTH ABUTMENT DETAILS
17–21	NORTH ABUTMENT REINFORCEMENT
22–24	PIER DETAILS
25–28	PIER REINFORCEMENT
29	FRAMING PLAN
30–32	PRESTRESSED CONCRETE BEAM
33–35	SUPERSTRUCTURE DETAILS
36	STEEL POST AND CABLE RAILING
37–38	DECK DRAINAGE AND WATERPROOFING
39	STONE SLOPE PROTECTION DETAILS
40–41	BRIDGE DETAILS
42	AS–BUILT BRIDGE DATA
43–44	BRIDGE SURVEY
45	BRIDGE SURVEY PLAN
46	BRIDGE SURVEY PROFILE
47–50	STAGING PLANS

BRIDGE NO. R0694

TC & W FREIGHT RAIL OVER CEDAR LAKE CHANNEL BETWEEN LAKE OF THE ISLES AND CEDAR LAKE IN MINNEAPOLIS

25'– 25'– 34'– 25'– 25' PRESTRESSED CONCRETE SLAB SPANS. 20'–4" RAILWAY 0°00'00.00" SKEW

BRIDGE ID NO. 509

GENERAL PLAN AND ELEVATION

SEC 32 T 29 N R 24 W
CITY OF MINNEAPOLIS HENNEPIN COUNTY

JOB NO.: T9N635 | STATE PROJ. NO.: 9909–01 | MNDOT REVIEW: JOE NIETFELD

NO.	DATE	BY	CHECK	DESIGN	REVISION / SUBMITTAL

DESIGNED BY: NRW CHECKED BY: JSM
DRAWN BY: PGR CHECKED BY: NRW

AECOM Kimley»Horn

90% SUBMISSION - 01/22/16

METROPOLITAN COUNCIL

SOUTHWEST Green Line LRT Extension

CIVIL - VOLUME 4F
CEDAR LAKE CHANNEL FREIGHT BRIDGE
BRIDGE R0694
GENERAL PLAN AND ELEVATION

DISCIPLINE: STRUCTURES
SHEET NAME: CBRR0694-BRG-GPE-001

SHEET 1 OF 50

Jan, 16 2016 09:33 am V:\3400_ADC\CAD\SEGMENT E3\PLAN SHEETS\STRUCTURES\R0694 CLCH-FRT\CBRR0694-BRG-GPE.dwg By: Nick.Williamson

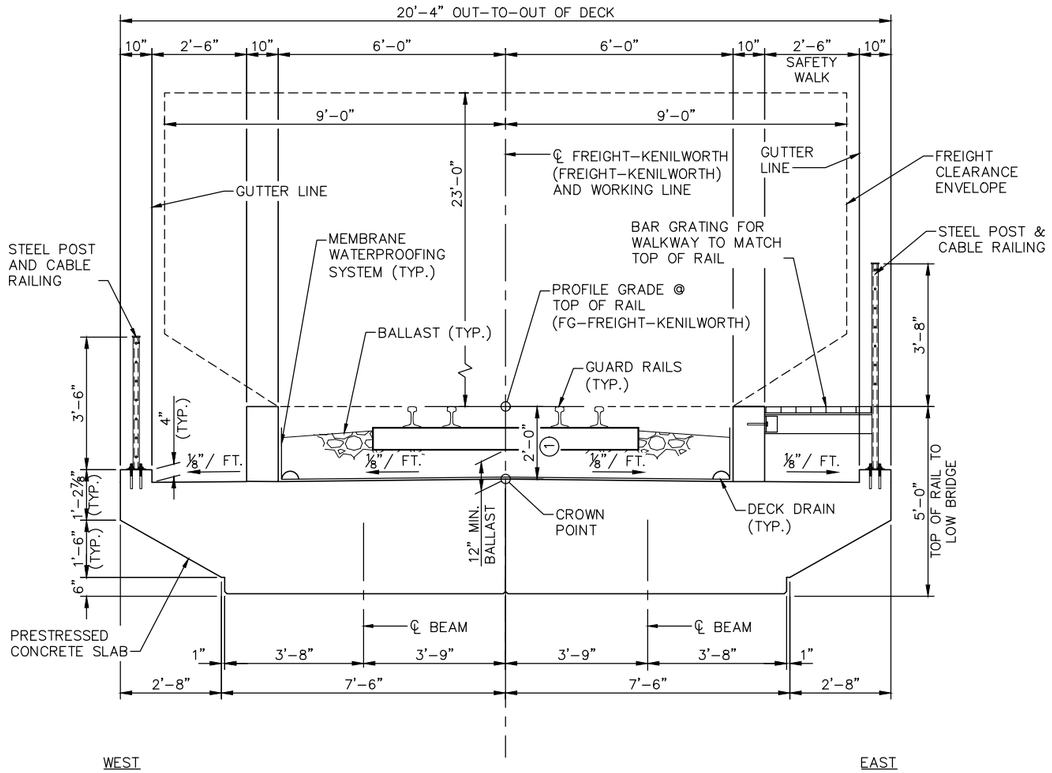

TRANSVERSE SECTION

0' 1' 2' 4'

SCALE IN FEET

NOTES:

(1) TOP OF RAIL TO CROWN POINT.

CONSTRUCTION NOTES:

THE 2016 EDITION OF THE MINNESOTA DEPARTMENT OF TRANSPORTATION "STANDARD SPECIFICATIONS FOR CONSTRUCTION" SHALL GOVERN.

THE BAR SIZES SHOWN IN THIS PLAN ARE IN U.S. CUSTOMARY DESIGNATIONS. THE FIRST DIGIT OR THE FIRST TWO DIGITS OF EACH BAR MARK INDICATE THE BAR SIZE.

THE SUBSURFACE UTILITY INFORMATION IN THIS PLAN IS UTILITY QUALITY LEVEL D. THIS UTILITY QUALITY LEVEL WAS DETERMINED ACCORDING TO THE GUIDELINES OF CI/ASCE 38-02, ENTITLED "STANDARD GUIDELINES FOR THE COLLECTION AND DEPICTION OF EXISTING SUBSURFACE UTILITY DATA".

THE PILE LOADS SHOWN IN THE PLANS WERE COMPUTED USING SERVICE LOAD METHODOLOGY. PILE BEARING RESISTANCE DETERMINED IN THE FIELD SHALL INCORPORATE THE METHODS AND/OR FORMULAS DESCRIBED IN THE SPECIAL PROVISIONS.

CONCRETE MATERIALS, MIX DESIGN, TESTING AND CONSTRUCTION SHALL BE IN ACCORDANCE WITH CHAPTER 8, PART 1 OF THE 2013 A.R.E.M.A. MANUAL; MnDOT 2461 AND THE SPECIAL PROVISIONS.

CONCRETE SHALL BE MADE WITH A LOW ALKAKI NORMAL PORTLAND CEMENT (TYPE I OR TYPE I/II) IN ACCORDANCE WITH ASTM C 150, LATEST EDITION, WITH LESS THAN 0.6% SODIUM EQUIVALENTS.

MAXIMUM CONCRETE WATER/CEMENT RATION SHALL BE IN ACCORDANCE WITH CHAPTER 8, SECTION 1.11 OF THE 2014 AREMA MANUAL AND MnDOT 2461.

GROUNDING NOTES:

SEE SHEETS ELE-SITE-SCH-504, ELE-SITE-DTL-600, ELE-SITE-DTL-601 AND ELE-SITE-DTL-602 FOR ADDITIONAL FENCE GROUNDING INFORMATION. FOR BRIDGES, ABUTMENTS AND RETAINING WALLS THAT DON'T HAVE STRAY CURRENT SYSTEMS, GROUND THE FENCE AS SHOWN IN THE RAILING DETAIL.

SCHEDULE OF QUANTITIES

SPEC. SECTION	ITEM	UNIT	QUANTITY
--	CONSTRUCT BRIDGE R0694	LUMP SUM	LS

COMPONENT ITEMS SUMMARY (BRIDGE R0694)

	SPEC. SECTION (3)	COMPONENT ITEM	UNIT (2)	QUANTITY (2)
(1)	2401	STRUCTURAL CONCRETE (1G52)	CU. YD.	
	2401	STRUCTURAL CONCRETE (3B52)	CU. YD.	
	2401	REINFORCEMENT BARS	POUND	
	2401	REINFORCEMENT BARS (EPOXY COATED)	POUND	
	2402	BEARING ASSEMBLY	EACH	
	SB-XX	PRESTRESSED CONCRETE SLABS	LIN. FT.	
	SB-XX	ARCHITECTURAL SURFACE FINISH (SINGLE COLOR)	SQ. FT.	
	2452	C-I-P CONCRETE PILING INSTALLED 12"	LIN. FT.	
	2452	C-I-P CONCRETE TEST PILE XX FT LONG 12"	EACH	
	2452	C-I-P CONCRETE TEST PILE XX FT LONG 12"	EACH	
	2452	C-I-P CONCRETE TEST PILE XX FT LONG 12"	EACH	
	2452	C-I-P CONCRETE TEST PILE XX FT LONG 12"	EACH	
	2452	C-I-P CONCRETE TEST PILE XX FT LONG 12"	EACH	
	2452	C-I-P CONCRETE TEST PILE XX FT LONG 12"	EACH	
	2481	MEMBRANE WATERPROOFING SYSTEM	LUMP SUM	
	2502	DRAINAGE SYSTEM (TYPE B910)	LUMP SUM	
	SB-XX	STONE SLOPE PROTECTION	CU. YD.	
	2511	GEOTEXTILE FILTER TYPE VII	SQ. YD.	
	SB-XX	STEEL POST-AND-CABLE RAILING	LIN. FT.	

(1) A BENCH MARK IS REQUIRED. LOCATED AT NE CORNER OF THE BRIDGE. STATE WILL FURNISH DISK. BEND PRONGS OUTWARD TO ANCHOR DISK IN CONCRETE. BOTTOM OF DISK TOP TO BE PLACED FLUSH WITH CONCRETE.

(2) QUANTITIES LISTED FOR THE COMPONENT ITEMS OF THE LUMP SUM BR R0694 ARE FOR INFORMATION PURPOSES. ANY ADDITIONAL ITEMS OR CHANGES IN QUANTITIES REQUIRED SHALL BE PROVIDED BY THE CONTRACTOR WITH NO ADDITIONAL COMPENSATION.

(3) MEASUREMENT AND PAYMENT FOR COMPONENT ITEMS SHALL BE PART OF THE LUMP SUM PAYMENT FOR BR R0694. REFER TO MNDOT STANDARD SPECIFICATION OR SPECIAL PROVISION FOR TECHNICAL SPECIFICATION REQUIREMENTS FOR ALL PROVISION OTHER THAN MEASUREMENT AND PAYMENT REQUIREMENTS.

NO.	DATE	BY	CHECK	DESIGN	REVISION / SUBMITTAL

DESIGNED BY: NRW | CHECKED BY: JSM
DRAWN BY: PGR | CHECKED BY: NRW

AECOM Kimley»Horn

90% SUBMISSION - 01/22/16

METROPOLITAN COUNCIL

SOUTHWEST Green Line LRT Extension

CIVIL - VOLUME 4F
CEDAR LAKE CHANNEL FREIGHT BRIDGE
BRIDGE R0694
TRANSVERSE SECTION AND QUANTITIES

DISCIPLINE: STRUCTURES
SHEET NAME: CBRR0694-BRG-TRN-001

SHEET 2 OF 50

Jan, 16 2016 09:33 am V:\3400_ADC\CAD\SEGMENT E3\PLAN SHEETS\STRUCTURES\R0694 CLCH-FRT\CBRR0694-BRG-TRN.dwg By: Nick.Williamson

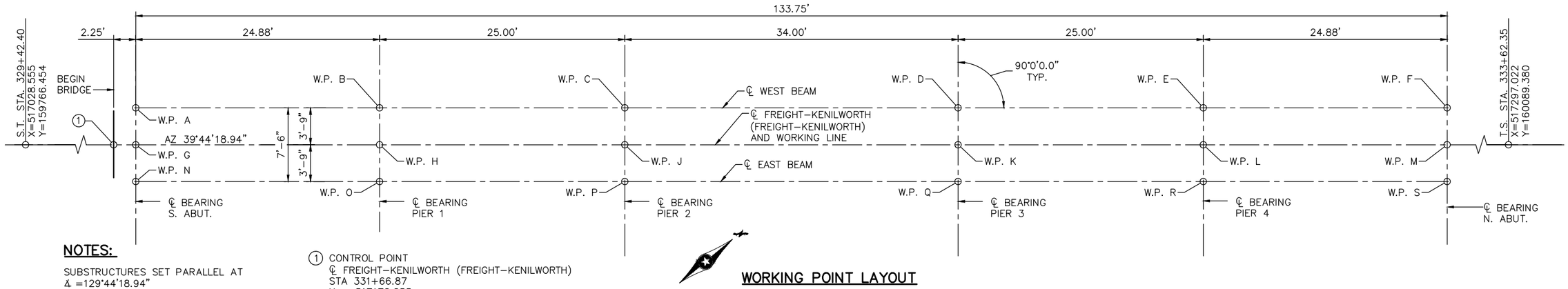

NOTES:

SUBSTRUCTURES SET PARALLEL AT
Δ =129°44'18.94"

① CONTROL POINT
℄ FREIGHT-KENILWORTH (FREIGHT-KENILWORTH)
STA 331+66.87
X = 517172.055
Y = 159939.064

WORKING POINT LAYOUT

DIMENSIONS BETWEEN WORKING POINTS																				COORDINATES			ELEVATIONS			
POINT	STATION	A	B	C	D	E	F	G	H	J	K	L	M	N	O	P	Q	R	S	X	Y	TOP OF RAIL	TOP OF SLAB	TOP OF SLAB TO BRIDGE SEAT	BRIDGE SEAT	POINT
A	331+69.12		24.88					3.75	25.15						25.98				133.96	517170.610	159943.191		868.78	3.00	865.78	A
B	331+94.00			25.00					3.75	25.28						26.10				517186.512	159962.319		868.71	3.00	865.71	B
C	332+19.00				34.00					3.75	34.21						34.82			517202.494	159981.543		868.64	3.00	865.64	C
D	332+53.00					25.00					3.75	25.28						26.10		517224.230	160007.688		868.55	3.00	865.55	D
E	332+78.00						24.88					3.75	25.16						25.98	517240.212	160026.913		868.48	3.00	865.48	E
F	333+02.87												3.75	133.96						517256.115	160046.041		868.41	3.00	865.41	F
G	331+69.12								24.88					3.75	25.16					517173.494	159940.794	870.82	868.82	3.04	865.78	G
H	331+94.00									25.00					3.75	25.28				517189.396	159959.922	870.75	868.75	3.04	865.71	H
J	332+19.00										34.00					3.75	34.21			517205.378	159979.146	870.68	868.68	3.04	865.64	J
K	332+53.00											25.00					3.75	25.28		517227.114	160005.291	870.59	868.59	3.04	865.55	K
L	332+78.00												24.88					3.75	25.16	517243.096	160024.515	870.52	868.52	3.04	865.48	L
M	333+02.87																		3.75	517258.998	160043.643	870.45	868.45	3.04	865.41	M
N	331+69.12														24.88					517176.377	159938.397		868.78	3.00	865.78	N
O	331+94.00															25.00				517192.280	159957.525		868.71	3.00	865.71	O
P	332+19.00																34.00			517208.262	159976.749		868.64	3.00	865.64	P
Q	332+53.00																	25.00		517229.997	160002.894		868.55	3.00	865.55	Q
R	332+78.00																		24.88	517245.980	160022.118		868.48	3.00	865.48	R
S	333+02.87																			517261.882	160041.246		868.41	3.00	865.41	S

NO.	DATE	BY	CHECK	DESIGN	REVISION / SUBMITTAL

DESIGNED BY: NRW | CHECKED BY: JSM
DRAWN BY: PGR | CHECKED BY: NRW

AECOM Kimley»Horn

90% SUBMISSION - 01/22/16

METROPOLITAN COUNCIL

SOUTHWEST Green Line LRT Extension

CIVIL - VOLUME 4F
CEDAR LAKE CHANNEL FREIGHT BRIDGE
BRIDGE R0694
BRIDGE LAYOUT

DISCIPLINE: STRUCTURES
SHEET NAME: CBRR0694-BRG-LYT-001

SHEET 3 OF 50

Jan, 16 2016 09:34 am V:\3400_ADC\CAD\SEGMENT E3\PLAN SHEETS\STRUCTURES\R0694 CLCH-FRT\CBRR0694-BRG-LYT.dwg By: Nick.Williamson

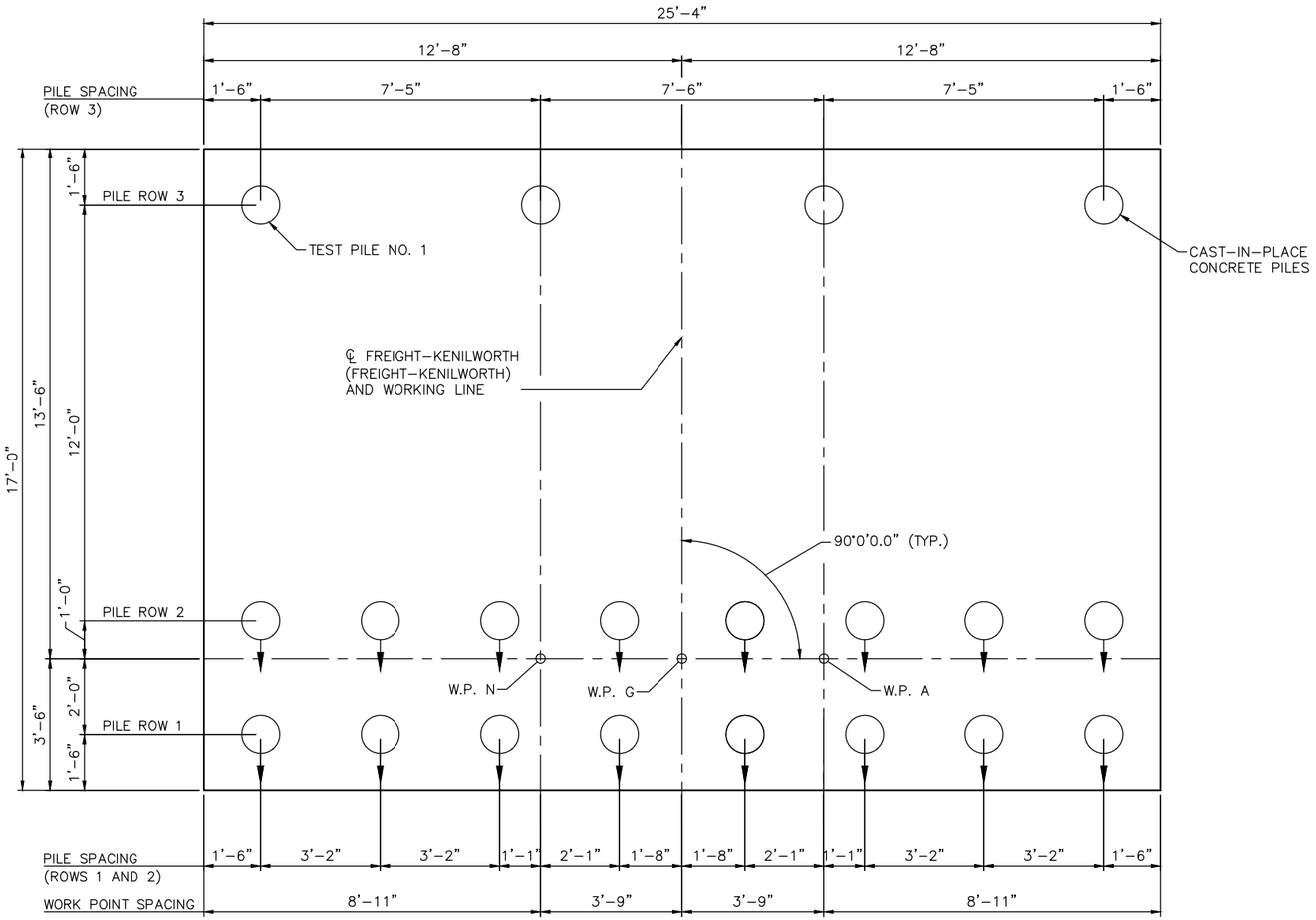

FOOTING PLAN

GENERAL PILE NOTES

1 CAST-IN-PLACE CONCRETE TEST PILES 85 FT. LONG
19 CAST-IN-PLACE CONCRETE PILES EST. 75 FT. LENGTH
20 CAST-IN-PLACE CONCRETE PILES REQ'D FOR WEST ABUT.

PILE SPACING SHOWN IS AT BOTTOM OF FOOTING.

PILES MARKED THUS ◯ TO BE BATTERED 3" PER FOOT IN DIRECTION SHOWN.

PILES TO HAVE A NOMINAL DIAMETER OF 12" AND ⅜" WALL THICKNESS.

FOR PILE SPLICE DETAILS SEE DETAIL B201.

SOUTH ABUTMENT COMPUTED PILE LOAD - TONS/PILE	
DEAD LOAD + EARTH PRESSURE	47
LIVE LOAD	8
TOTAL LOAD	55
* BASED ON GROUP I LOADING (SERVICE LOAD) PER AREMA CHAPTER 8 SECTION 2.2.4	

REQUIRED PILE TEST LOAD	
FIELD CONTROL METHOD	TEST LOAD
PDA	110

NO.	DATE	BY	CHECK	DESIGN	REVISION / SUBMITTAL

DESIGNED BY: NRW CHECKED BY: JSM
DRAWN BY: PGR CHECKED BY: NRW

AECOM Kimley»Horn

90% SUBMISSION - 01/22/16

METROPOLITAN COUNCIL

SOUTHWEST Green Line LRT Extension

CIVIL - VOLUME 4F
CEDAR LAKE CHANNEL FREIGHT BRIDGE
BRIDGE R0694
SOUTH ABUTMENT DETAILS 1

DISCIPLINE: STRUCTURES
SHEET NAME: CBRR0694-BRG-ABT-001

SHEET 4 OF 50

Jan, 16 2016 09:34 am V:\3400_ADC\CAD\SEGMENT E3\PLAN SHEETS\STRUCTURES\R0694 CLCH-FRT\CBRR0694-BRG-ABUT.dwg By: Nick.Williamson

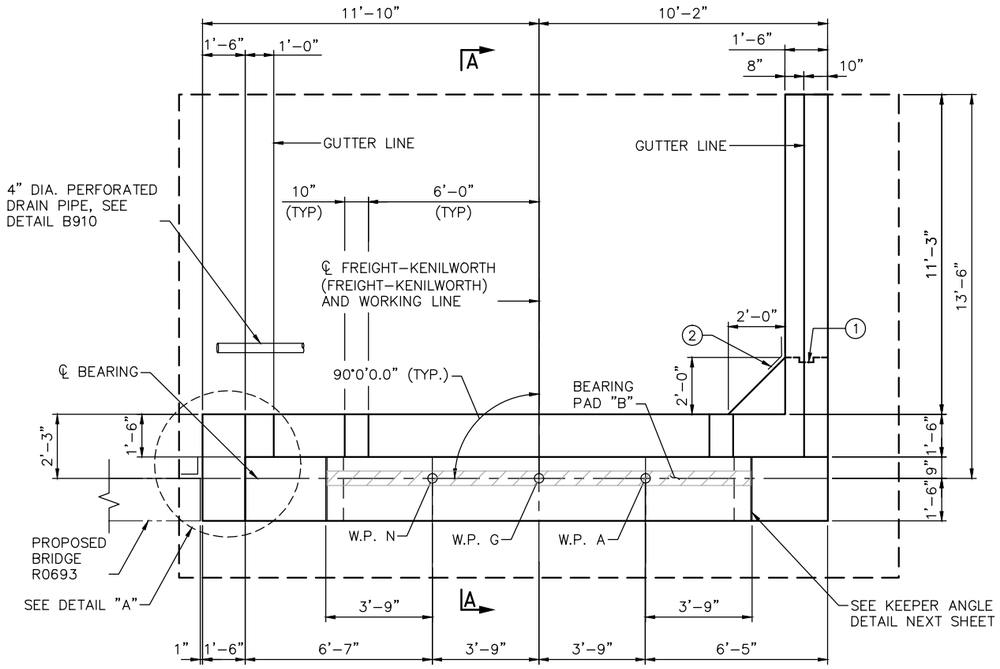

ABUTMENT PLAN

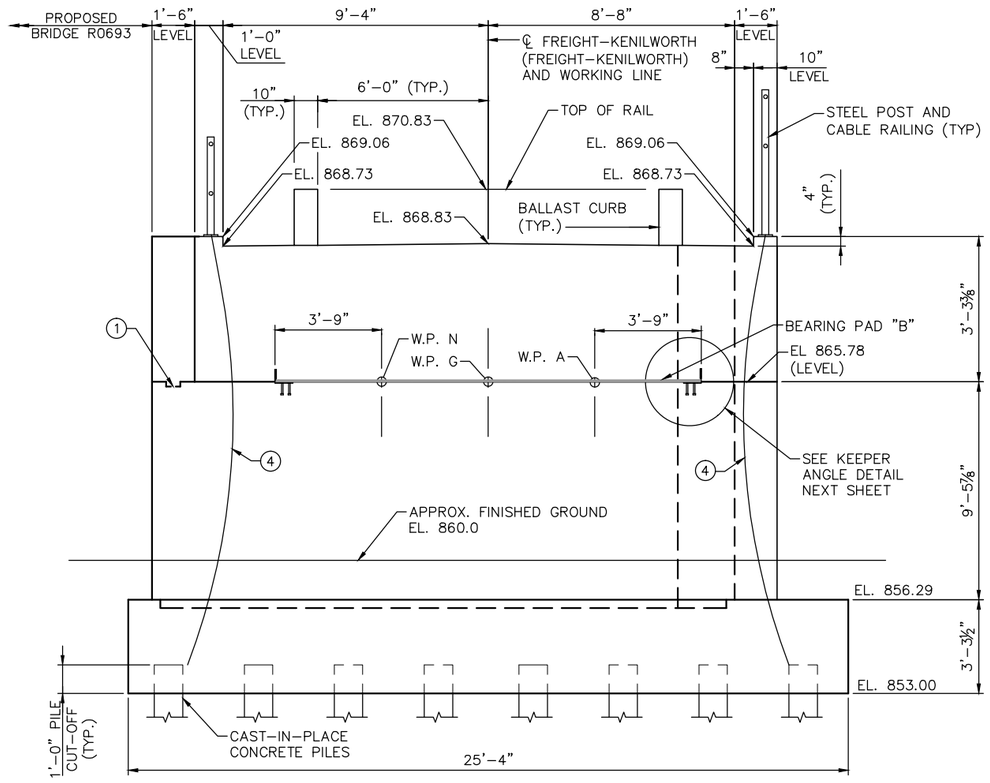

ABUTMENT ELEVATION

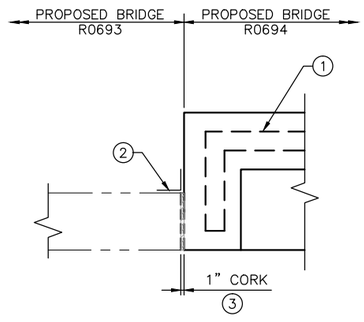

DETAIL A

NOTES:

SEE NEXT SHEET FOR SECTION A-A AND BEARING PAD DETAILS

72 HOUR TIME DELAY REQUIRED BETWEEN ADJACENT POURS TO ALLOW FOR SHRINKAGE.

FOR SOUTHWEST WINGWALL SEE SHT. 7.

ELEVATIONS ARE TAKEN AT BACK FACE.

(1) CONSTRUCTION JOINT WITH 2"X6" KEY.

(2) MEMBRANE WATERPROOFING SYSTEM PER SPEC 2481.3.B

(3) ELECTRICAL INSULATING CORK BARRIER. CONTRACTOR AND FIELD ENGINEER SHALL FIELD VERIFY CONCRETE IS SEPARATED AND CONDUCTIVE MATERIAL DOES NOT EXTEND THROUGH CORK.

(4) ATTACH FENCE ANCHORAGE TO PILE WITH SOLID NO. 6 GAGE COPPER WIRE WITH AN APPROVED TYPE CLAMP OR BRAZING (ONE ANCHORAGE PER END OF RAIL). GROUND BOTH SIDES OF EXPANSION JOINT PIPE SLEEVE IF PRESENT.

NO.	DATE	BY	CHECK	DESIGN	REVISION / SUBMITTAL

DESIGNED BY: NRW | CHECKED BY: JSM
DRAWN BY: PGR | CHECKED BY: NRW

AECOM Kimley»Horn

90% SUBMISSION - 01/22/16

METROPOLITAN COUNCIL

SOUTHWEST Green Line LRT Extension

CIVIL - VOLUME 4F
CEDAR LAKE CHANNEL FREIGHT BRIDGE
BRIDGE R0694
SOUTH ABUTMENT DETAILS 2

DISCIPLINE: STRUCTURES
SHEET NAME: CBRR0694-BRG-ABT-002

SHEET 5 OF 50

Jan, 16 2016 09:34 am V:\3400_ADC\CAD\SEGMENT E3\PLAN SHEETS\STRUCTURES\R0694 CLCH-FRT\CBRR0694-BRG-ABUT.dwg By: Nick.Williamson

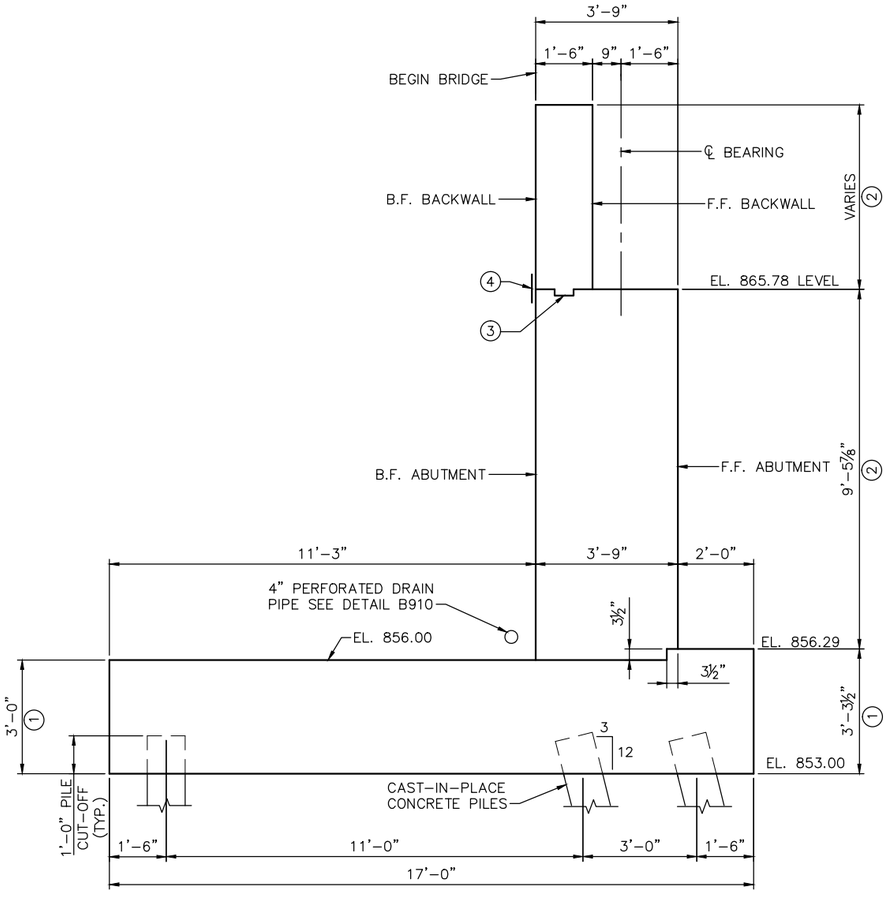

SECTION A–A

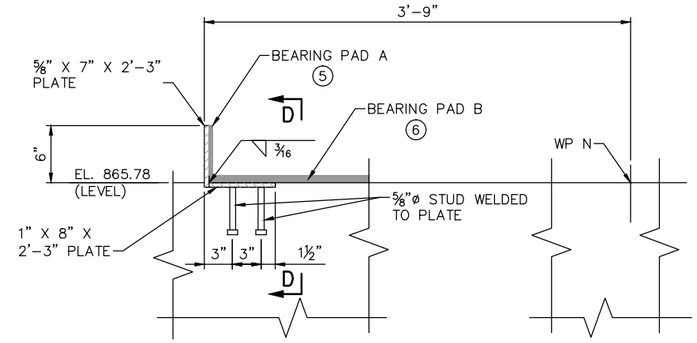

KEEPER ANGLE DETAIL

(SOUTHEAST SIDE SHOWN, SOUTHWEST SIDE SIMILAR)

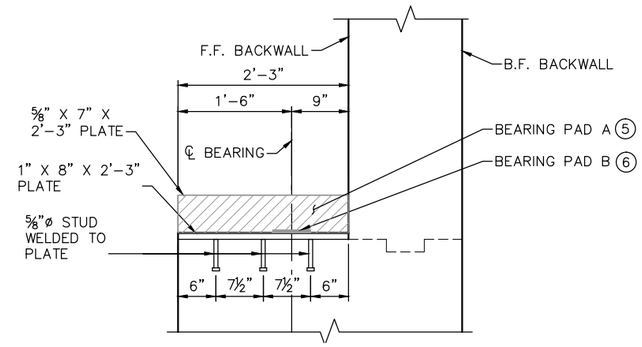

SECTION D–D

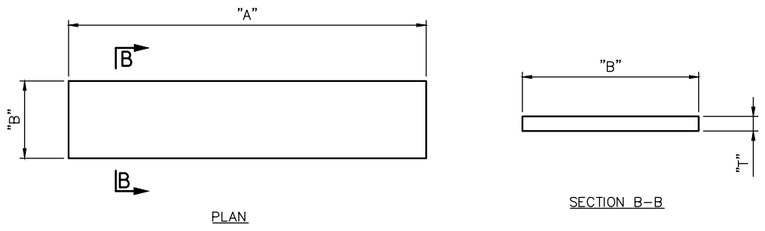

BEARING PAD DETAIL

NOTE: PADS SHALL COMPLY WITH MNDOT SPEC. 3741

PAD	DIMENSION A	B	T
A	2'-3"	5½"	⅜"
B	14'-10¾"	6"	½"
C	1'-8"	5½"	⅜"
D	1'-9"	5½"	⅜"

NOTES:

72 HOUR TIME DELAY REQUIRED BETWEEN ADJACENT POURS TO ALLOW FOR SHRINKAGE.

GALVANIZE STRUCTURAL STEEL AFTER FABRICATION PER MnDOT SPEC. 3394.

GALVANIZE FASTENERS PER MnDOT SPEC. 3392.

STRUCTURAL STEEL SHALL COMPLY WITH MnDOT SPEC. 3306.

(1) STRUCTURAL CONCRETE (1G52).

(2) STRUCTURAL CONCRETE (3B52).

(3) CONSTRUCTION JOINT WITH 2" x 6" KEY CENTERED IN WALL.

(4) MEMBRANE WATERPROOFING SYSTEM PER SPEC. 2481.3.B.

(5) BEARING PAD A SHALL BE GLUED TO STEEL WITH CONSTRUCTION ADHESIVE.

(6) BEARING PAD B SHALL BE GLUED TO CONCRETE WITH CONSTRUCTION ADHESIVE.

NO.	DATE	BY	CHECK	DESIGN	REVISION / SUBMITTAL

DESIGNED BY: NRW | CHECKED BY: JSM

DRAWN BY: PGR | CHECKED BY: NRW

AECOM Kimley»Horn

90% SUBMISSION - 01/22/16

METROPOLITAN COUNCIL

SOUTHWEST Green Line LRT Extension

CIVIL - VOLUME 4F
CEDAR LAKE CHANNEL FREIGHT BRIDGE
BRIDGE R0694
SOUTH ABUTMENT DETAILS 3

DISCIPLINE: STRUCTURES

SHEET NAME: CBRR0694-BRG-ABT-003

SHEET 6 OF 50

Jan, 16 2016 09:34 am V:\3400_ADC\CAD\SEGMENT E3\PLAN SHEETS\STRUCTURES\R0694 CLCH-FRT\CBRR0694-BRG-ABUT.dwg By: Nick.Williamson

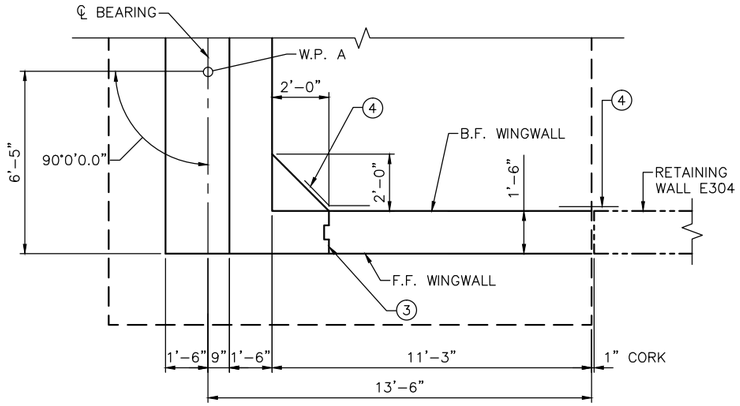

SOUTHWEST WINGWALL PLAN

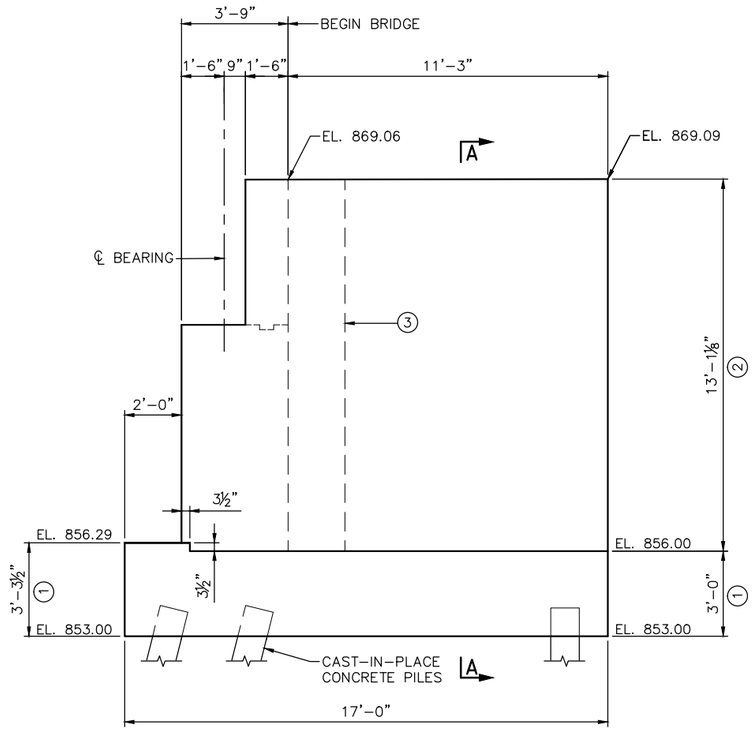

SOUTHWEST WINGWALL ELEVATION

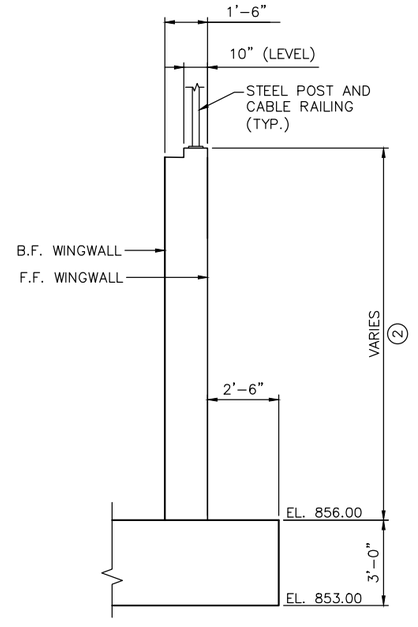

SECTION A–A

NOTES:

72 HOUR TIME DELAY REQUIRED BETWEEN ADJACENT POURS TO ALLOW FOR SHRINKAGE.

1. STRUCTURAL CONCRETE (1G52).
2. STRUCTURAL CONCRETE (3B52).
3. CONSTRUCTION JOINT WITH 2" x 6" KEY CENTERED IN WALL.
4. MEMBRANE WATERPROOFING SYSTEM PER SPEC. 2481.3.B.

NO.	DATE	BY	CHECK	DESIGN	REVISION / SUBMITTAL

DESIGNED BY: NRW CHECKED BY: JSM
DRAWN BY: PGR CHECKED BY: NRW

AECOM Kimley»Horn

90% SUBMISSION - 01/22/16

METROPOLITAN COUNCIL

SOUTHWEST Green Line LRT Extension

CIVIL - VOLUME 4F
CEDAR LAKE CHANNEL FREIGHT BRIDGE
BRIDGE R0694
SOUTH ABUTMENT DETAILS 4

DISCIPLINE: STRUCTURES
SHEET NAME: CBRR0694-BRG-ABT-004

SHEET 7 OF 50

Jan, 16 2016 09:34 am V:\3400_ADC\CAD\SEGMENT E3\PLAN SHEETS\STRUCTURES\R0694 CLCH-FRT\CBRR0694-BRG-ABUT.dwg By: Nick.Williamson

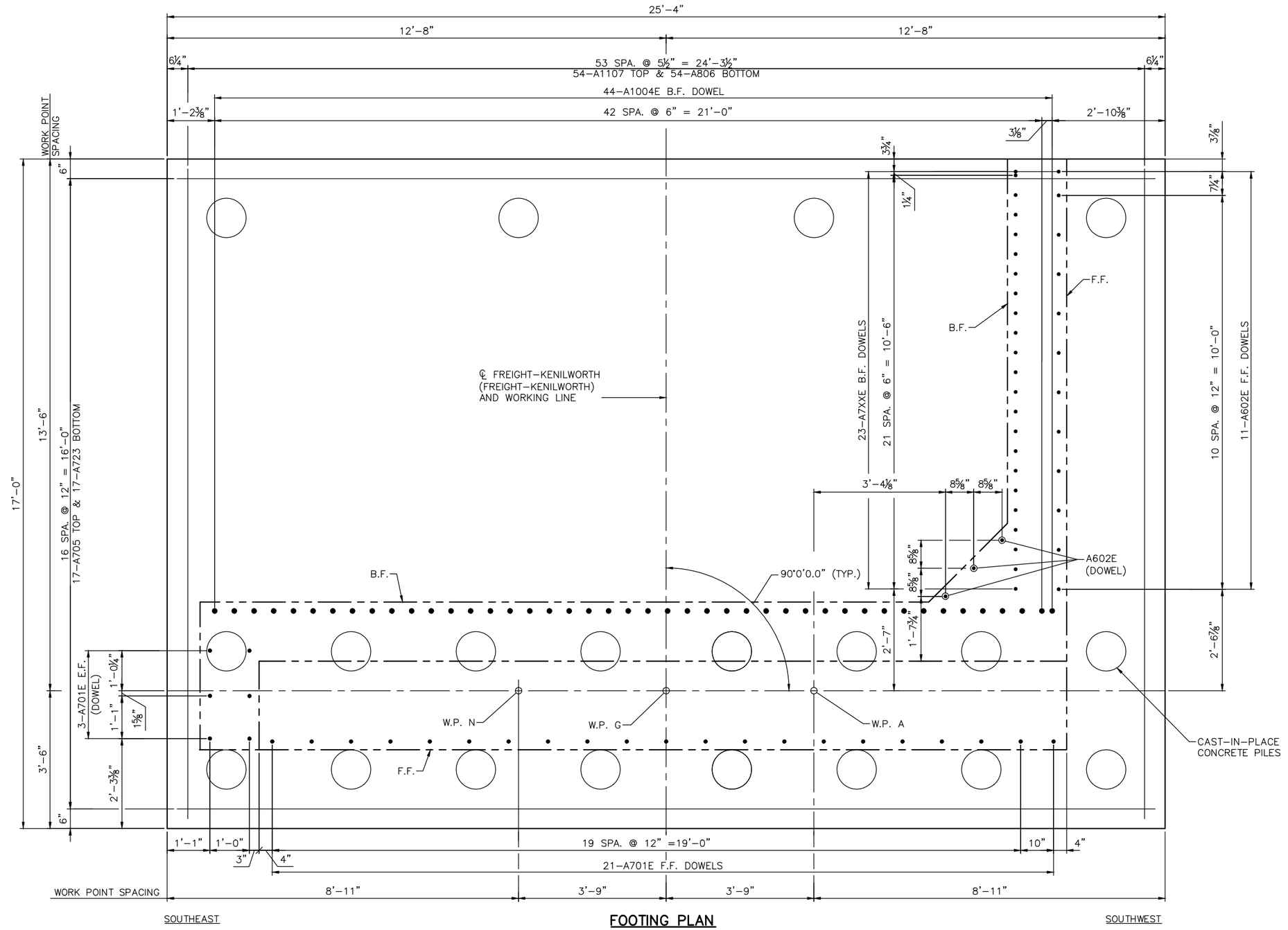

FOOTING PLAN

NOTES:

F.F. – DENOTES FRONT FACE

B.F. – DENOTES BACK FACE

E.F. – DENOTES EACH FACE

NO.	DATE	BY	CHECK	DESIGN	REVISION / SUBMITTAL

DESIGNED BY: NRW | CHECKED BY: JSM

DRAWN BY: PGR | CHECKED BY: JSM

AECOM Kimley»Horn

90% SUBMISSION - 01/22/16

METROPOLITAN COUNCIL

SOUTHWEST Green Line LRT Extension

CIVIL - VOLUME 4F
CEDAR LAKE CHANNEL FREIGHT BRIDGE
BRIDGE R0694
SOUTH ABUTMENT REINFORCEMENT 1

DISCIPLINE: STRUCTURES

SHEET NAME: CBRR0694-BRG-ABT-005

SHEET 8 OF 50

Jan, 16 2016 09:34 am V:\3400_ADC\CAD\SEGMENT E3\PLAN SHEETS\STRUCTURES\R0694 CLCH-FRT\CBRR0694-BRG-ABUT.dwg By: Nick.Williamson

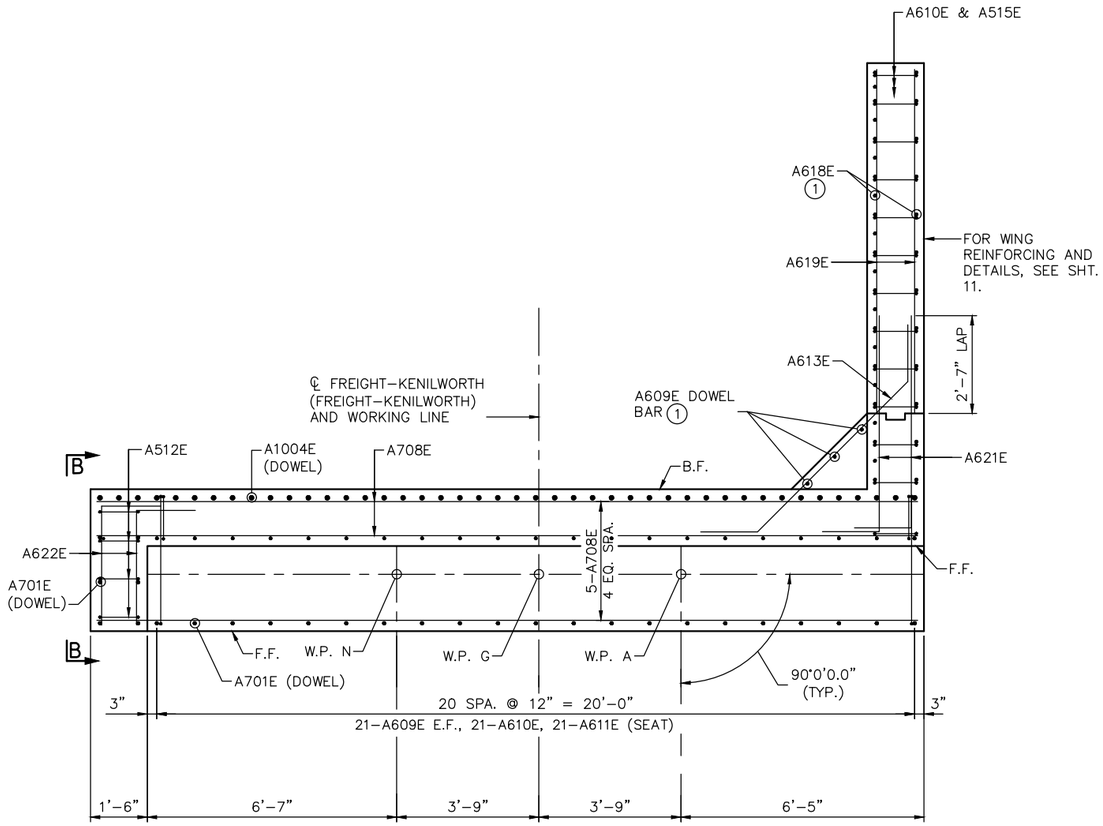

SOUTHEAST

ABUTMENT PLAN

SOUTHWEST

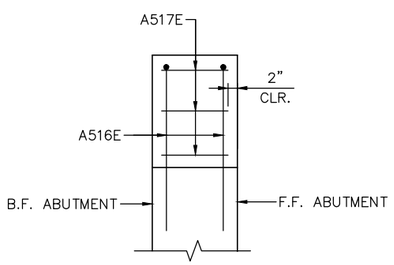

SECTION D-D

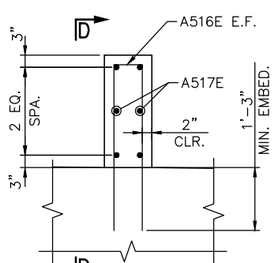

BALLAST CURB DETAIL

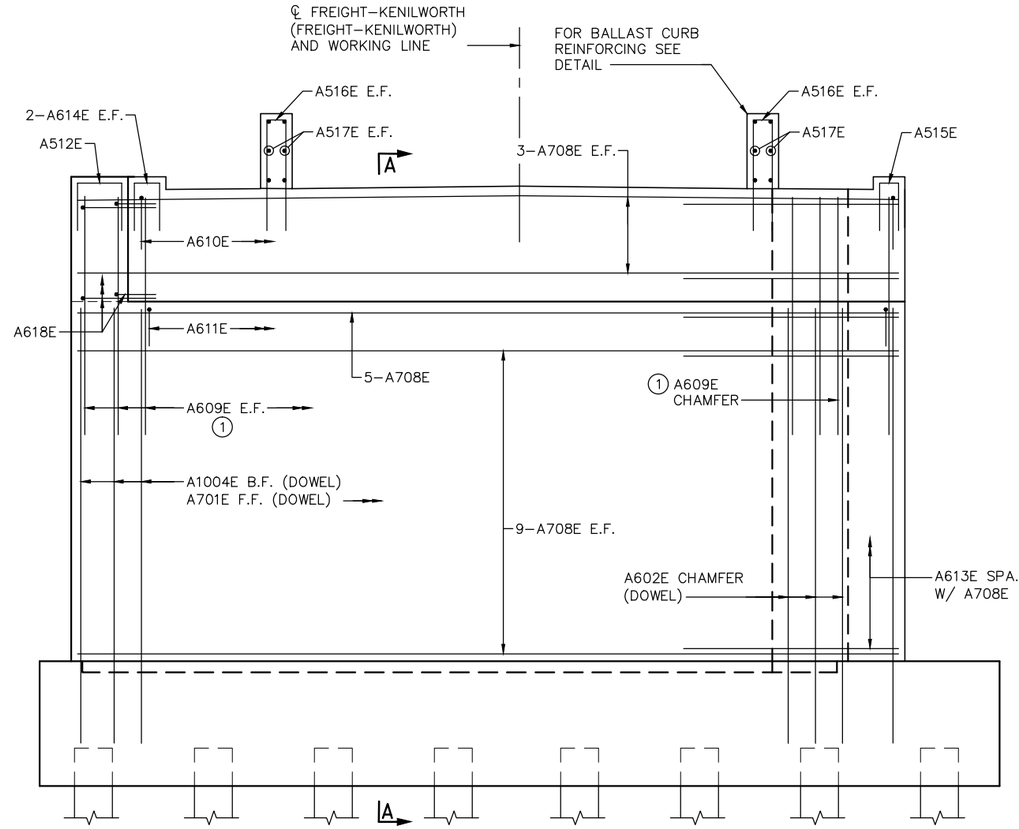

ABUTMENT ELEVATION

NOTES:

FOR SECTION A-A AND B-B SEE NEXT SHEET.

F.F. – DENOTES FRONT FACE

B.F. – DENOTES BACK FACE

E.F. – DENOTES EACH FACE

(1) SPACE WITH DOWEL BARS

NO.	DATE	BY	CHECK	DESIGN	REVISION / SUBMITTAL

DESIGNED BY: NRW | CHECKED BY: JSM

DRAWN BY: PGR | CHECKED BY: JSM

AECOM Kimley»Horn

90% SUBMISSION - 01/22/16

METROPOLITAN COUNCIL

SOUTHWEST Green Line LRT Extension

CIVIL - VOLUME 4F
CEDAR LAKE CHANNEL FREIGHT BRIDGE
BRIDGE R0694
SOUTH ABUTMENT REINFORCEMENT 2

DISCIPLINE: STRUCTURES

SHEET NAME: CBRR0694-BRG-ABT-006

SHEET 9 OF 50

Jan, 16 2016 09:34 am V:\3400_ADC\CAD\SEGMENT E3\PLAN SHEETS\STRUCTURES\R0694 CLCH-FRT\CBRR0694-BRG-ABUT.dwg By: Nick.Williamson

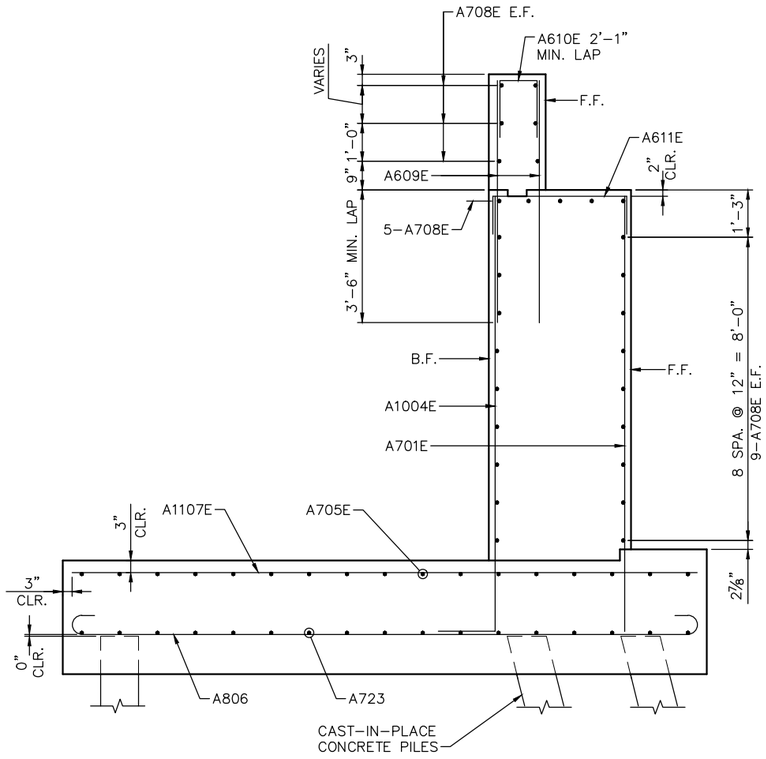

SECTION A-A

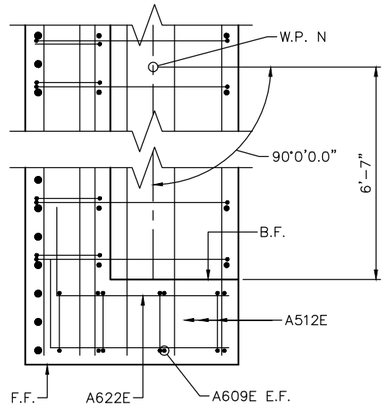

PART PLAN

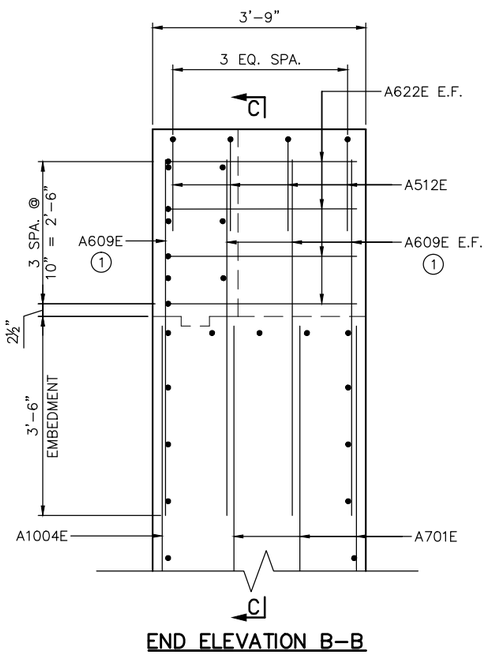

END ELEVATION B-B

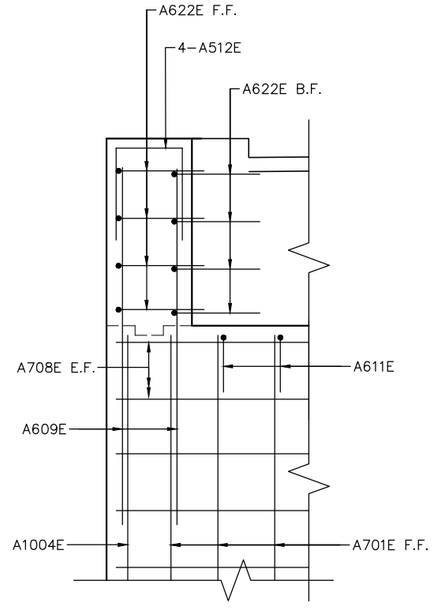

SECTION C-C

NOTES:

F.F. – DENOTES FRONT FACE

B.F. – DENOTES BACK FACE

E.F. – DENOTES EACH FACE

(1) SPACE WITH DOWEL BARS

NO.	DATE	BY	CHECK	DESIGN	REVISION / SUBMITTAL

DESIGNED BY: NRW | CHECKED BY: JSM

DRAWN BY: PGR | CHECKED BY: JSM

AECOM Kimley»Horn

90% SUBMISSION - 01/22/16

METROPOLITAN COUNCIL

SOUTHWEST Green Line LRT Extension

CIVIL - VOLUME 4F
CEDAR LAKE CHANNEL FREIGHT BRIDGE
BRIDGE R0694
SOUTH ABUTMENT REINFORCEMENT 3

DISCIPLINE: STRUCTURES

SHEET NAME: CBRR0694-BRG-ABT-007

SHEET 10 OF 50

Jan, 16 2016 09:34 am V:\3400_ADC\CAD\SEGMENT E3\PLAN SHEETS\STRUCTURES\R0694 CLCH-FRT\CBRR0694-BRG-ABUT.dwg By: Nick.Williamson

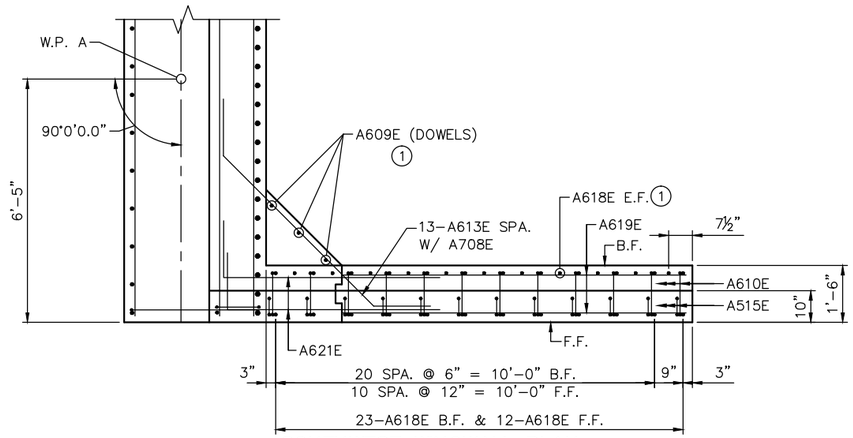

SOUTHWEST WINGWALL PLAN

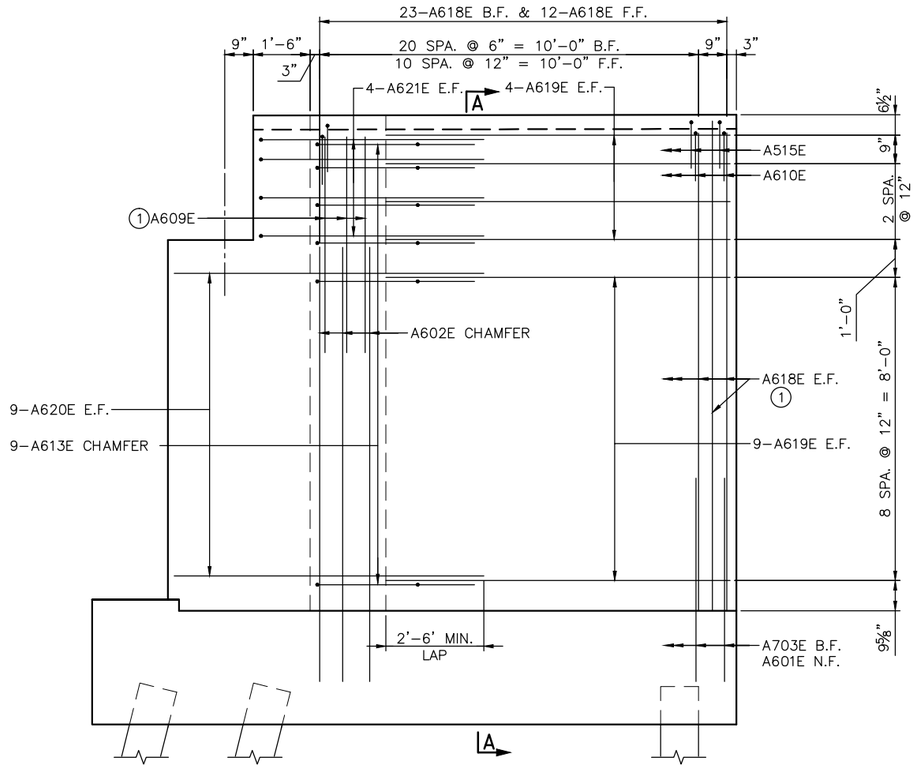

SOUTHWEST WINGWALL ELEVATION

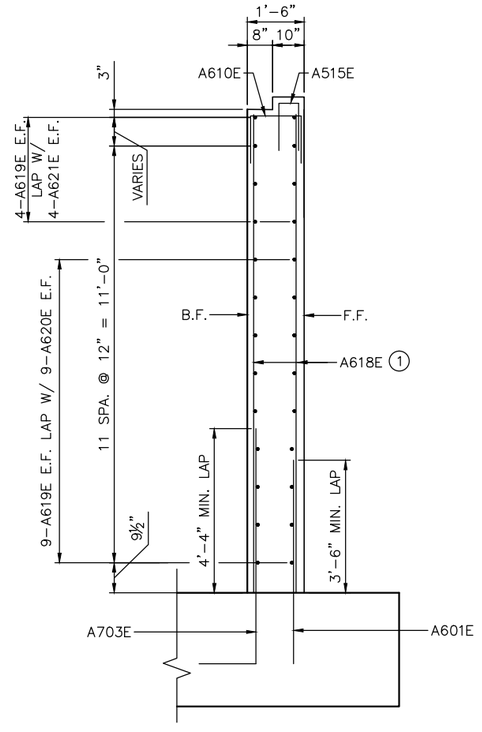

SECTION A-A

NOTES:

F.F. – DENOTES FRONT FACE

B.F. – DENOTES BACK FACE

E.F. – DENOTES EACH FACE

1 SPACE WITH DOWEL BARS

NO.	DATE	BY	CHECK	DESIGN	REVISION / SUBMITTAL

DESIGNED BY: NRW CHECKED BY: JSM

DRAWN BY: PGR CHECKED BY: JSM

AECOM Kimley»Horn

90% SUBMISSION - 01/22/16

METROPOLITAN COUNCIL

SOUTHWEST Green Line LRT Extension

CIVIL - VOLUME 4F
CEDAR LAKE CHANNEL FREIGHT BRIDGE
BRIDGE R0694
SOUTH ABUTMENT REINFORCEMENT 4

DISCIPLINE: STRUCTURES

SHEET NAME: CBRR0694-BRG-ABT-008

SHEET 11 OF 50

Jan, 16 2016 09:34 am V:\3400_ADC\CAD\SEGMENT E3\PLAN SHEETS\STRUCTURES\R0694 CLCH-FRT\CBRR0694-BRG-ABUT.dwg By: Nick.Williamson

BILL OF REINFORCEMENT FOR SOUTH ABUTMENT				
BAR	NO.	LENGTH	SHAPE	LOCATION
A701E	27	'-"	STR.	F.F. VERT DOWEL
A602E	20	'-"	STR.	F.F. VERT DOWEL
A703E	23	'-"	BENT	B.F. VERT DOWEL
A1004E	44	'-"	BENT	B.F. VERT DOWEL
A705	34	'-"	BENT	FOOTING TRANSVERSE
A806	54	'-"	BENT	FOOTING LONGITUDINAL
A1107	54	'-"	BENT	FOOTING LONGITUDINAL
A708E	26	'-"	STR.	ABUTMENT E.F.
A609E	45	'-"	STR.	E.F. BACKWALL / CHAMFER
A610E	31	'-"	BENT	WINGWALL & BACKWALL TIE
A611E	21	'-"	BENT	ABUTMENT SEAT
A512E	4	'-"	BENT	BACKWALL TIE
A613E	10	'-"	BENT	CHAMFER
A514E	2	'-"	BENT	CURB
A515E	0	'-"	BENT	CURB
A516E	4	'-"	BENT	BALLAST WALL
A517E	6	'-"	STR.	BALLAST WALL
A618E	34	'-"	STR.	SW WINGWALL VERT.
A619E	26	'-"	STR.	SW WINGWALL HORZ.
A620E	18	'-"	STR.	SW WINGWALL HORZ.
A621E	8	'-"	BENT	SW WINGWALL HORZ.
A622E	8	'-"	BENT	SW WINGWALL HORZ.
A723	17	'-"	BENT	FOOTING TRANSVERSE

Jan, 16 2016 09:34 am V:\3400_ADC\CAD\SEGMENT E3\PLAN SHEETS\STRUCTURES\R0694 CLCH-FRT\CBRR0694-BRG-ABUT.dwg By: Nick.Williamson

NO.	DATE	BY	CHECK	DESIGN	REVISION / SUBMITTAL

DESIGNED BY: NRW CHECKED BY: JSM
DRAWN BY: PGR CHECKED BY: JSM

AECOM Kimley»Horn

90% SUBMISSION - 01/22/16

METROPOLITAN COUNCIL

SOUTHWEST Green Line LRT Extension

CIVIL - VOLUME 4F
CEDAR LAKE CHANNEL FREIGHT BRIDGE
BRIDGE R0694
SOUTH ABUTMENT REINFORCEMENT 5

DISCIPLINE: STRUCTURES
SHEET NAME: CBRR0694-BRG-ABT-009

SHEET 12 OF 50

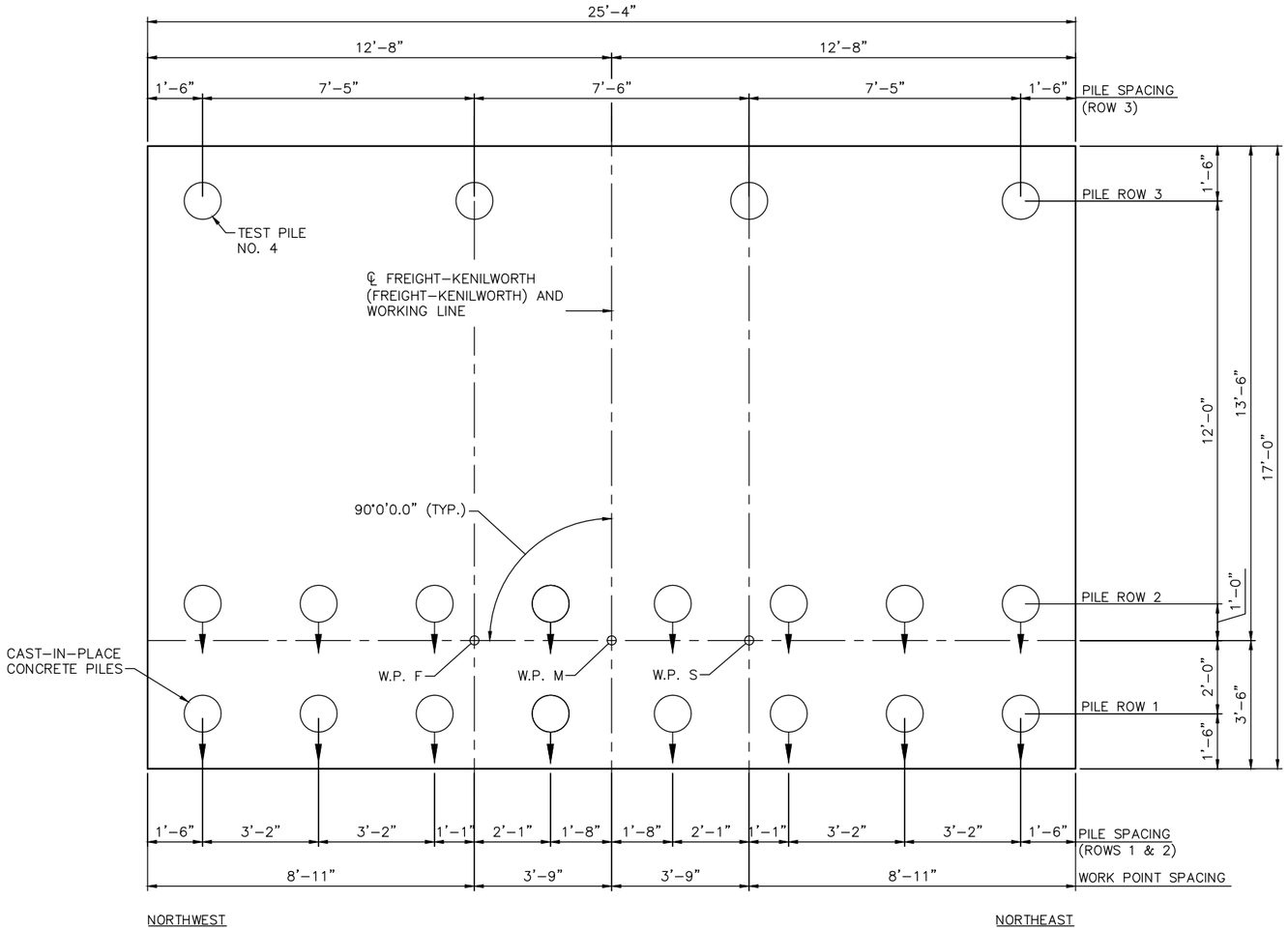

FOOTING PLAN

GENERAL PILE NOTES

1 CAST-IN-PLACE CONCRETE TEST PILES 109 FT. LONG
19 CAST-IN-PLACE CONCRETE PILES EST. 99 FT. LENGTH
20 CAST-IN-PLACE CONCRETE PILES REQ'D FOR WEST ABUT.

PILE SPACING SHOWN IS AT BOTTOM OF FOOTING.

PILES MARKED THUS ◯ TO BE BATTERED 3" PER FOOT IN DIRECTION SHOWN.

PILES TO HAVE A NOMINAL DIAMETER OF 12" AND ⅜" WALL THICKNESS.

FOR PILE SPLICE DETAILS SEE DETAIL B201.

NORTH ABUTMENT COMPUTED PILE LOAD - TONS/PILE	
DEAD LOAD + EARTH PRESSURE	45
LIVE LOAD	10
TOTAL LOAD	55
* BASED ON GROUP I LOADING (SERVICE LOAD) PER AREMA CHAPTER 8 SECTION 2.2.4	

REQUIRED PILE TEST LOAD	
FIELD CONTROL METHOD	TEST LOAD
PDA	110

NO.	DATE	BY	CHECK	DESIGN	REVISION / SUBMITTAL

DESIGNED BY: NRW | CHECKED BY: JSM
DRAWN BY: PGR | CHECKED BY: NRW

AECOM Kimley»Horn

90% SUBMISSION - 01/22/16

METROPOLITAN COUNCIL

SOUTHWEST Green Line LRT Extension

CIVIL - VOLUME 4F
CEDAR LAKE CHANNEL FREIGHT BRIDGE
BRIDGE R0694
NORTH ABUTMENT DETAILS 1

DISCIPLINE: STRUCTURES
SHEET NAME: CBRR0694-BRG-ABT-010

SHEET 13 OF 50

Jan, 16 2016 09:34 am V:\3400_ADC\CAD\SEGMENT E3\PLAN SHEETS\STRUCTURES\R0694 CLCH-FRT\CBRR0694-BRG-ABUT.dwg By: Nick.Williamson

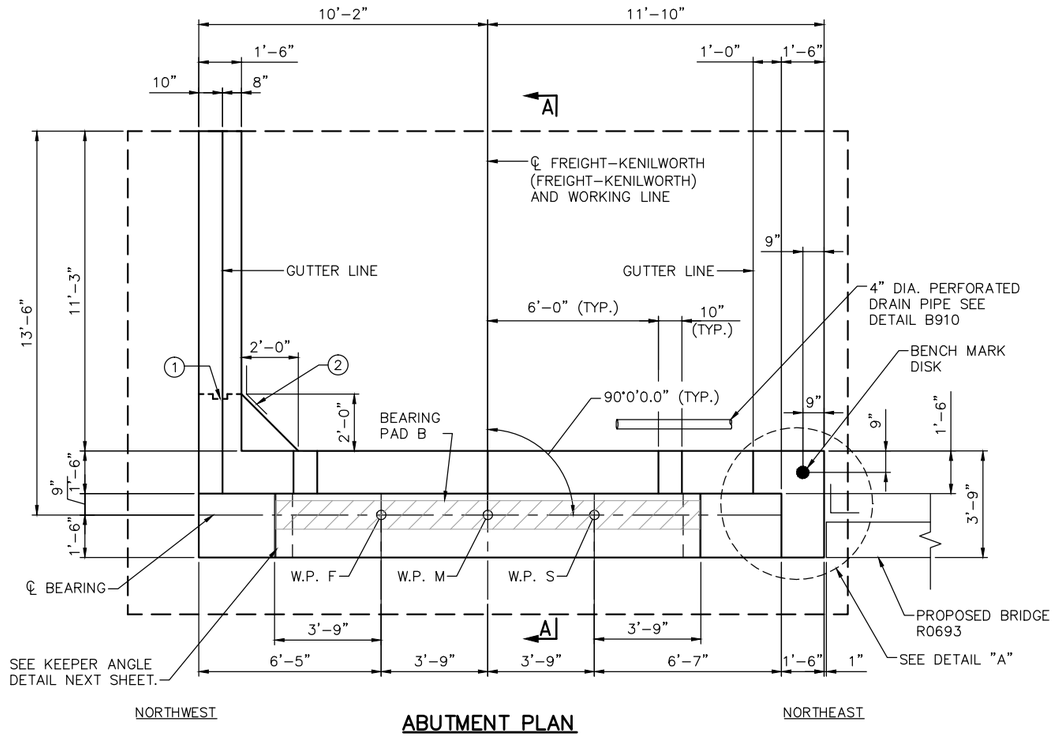

ABUTMENT PLAN

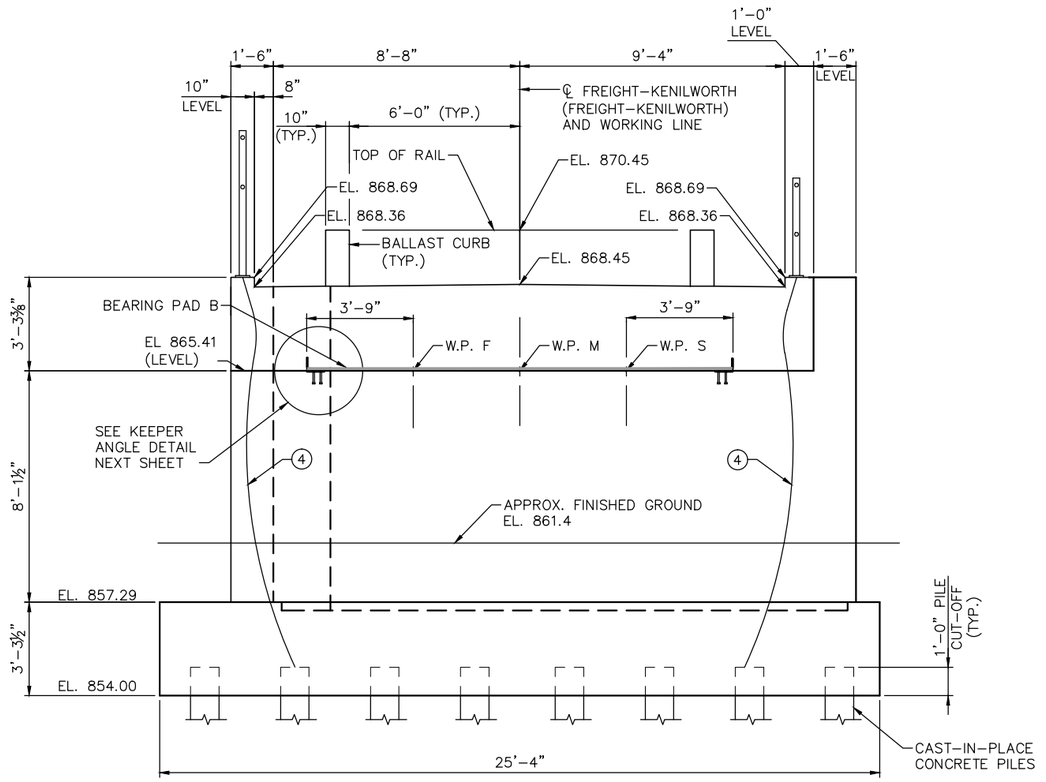

ABUTMENT ELEVATION

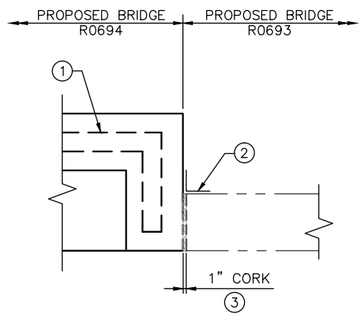

DETAIL "A"

NOTES:

SEE NEXT SHEET FOR SECTION A-A AND BEARING PAD DETAILS.

72 HOUR TIME DELAY REQUIRED BETWEEN ADJACENT POURS TO ALLOW FOR SHRINKAGE.

FOR NORTHWEST WINGWALL SEE SHT. 16.

ELEVATIONS ARE TAKEN AT BACK FACE.

(1) CONSTRUCTION JOINT WITH 2"X6" KEY.

(2) MEMBRANE WATERPROOFING SYSTEM PER SPEC. 2481.3B

(3) ELECTRICAL INSULATING CORK BARRIER, CONTRACTOR AND FIELD ENGINEER SHALL VERIFY CONCRETE IS SEPARATED AND CONDUCTIVE MATERIAL DOES NOT EXTEND THROUGH CORK.

(4) ATTACH FENCE ANCHORAGE TO PILE WITH SOLID NO. 6 GAGE COPPER WIRE WIH AN APPROVED TYPE CLAMP OR BRAZING (ONE ANCHORAGE PER END OF RAIL). GROUND BOTH SIDES OF EXPANSIONS. JOINT PIPE SLEEVE IF PRESENT.

NO.	DATE	BY	CHECK	DESIGN	REVISION / SUBMITTAL

DESIGNED BY: NRW | CHECKED BY: JSM
DRAWN BY: PGR | CHECKED BY: NRW

AECOM Kimley»Horn

90% SUBMISSION - 01/22/16

METROPOLITAN COUNCIL

SOUTHWEST Green Line LRT Extension

CIVIL - VOLUME 4F
CEDAR LAKE CHANNEL FREIGHT BRIDGE
BRIDGE R0694
NORTH ABUTMENT DETAILS 2

DISCIPLINE: STRUCTURES
SHEET NAME: CBRR0694-BRG-ABT-011

SHEET 14 OF 50

Jan, 16 2016 09:35 am V:\3400_ADC\CAD\SEGMENT E3\PLAN SHEETS\STRUCTURES\R0694 CLCH-FRT\CBRR0694-BRG-ABUT.dwg By: Nick.Williamson

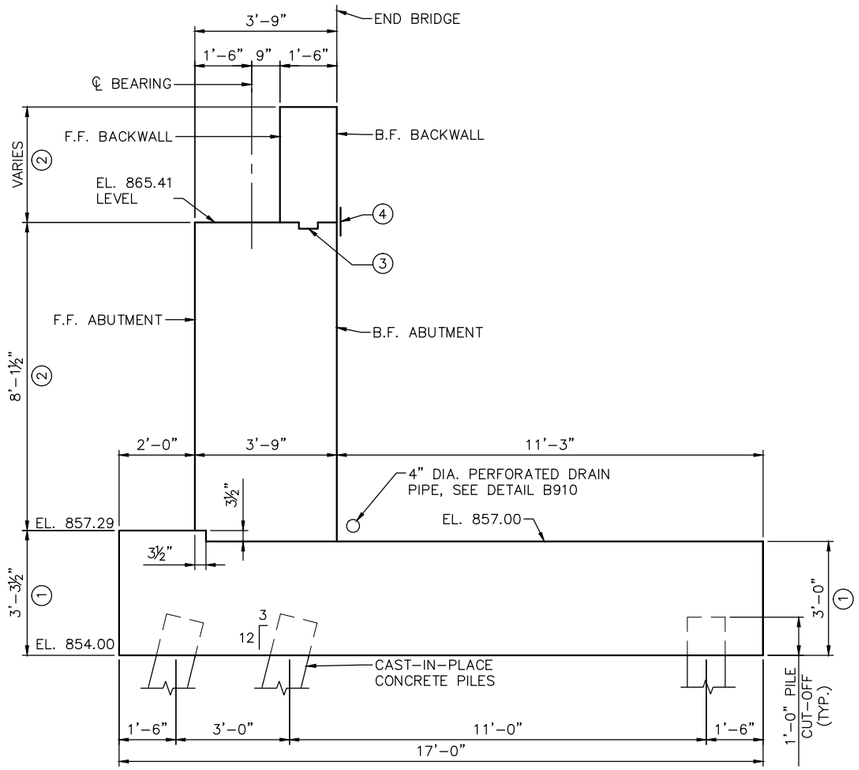

SECTION A-A

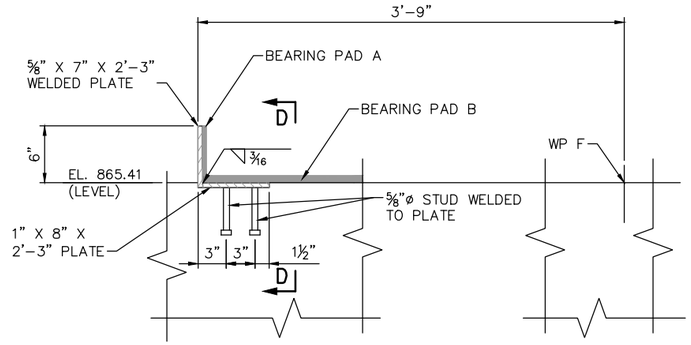

KEEPER ANGLE DETAIL

(NORTHWEST SIDE SHOWN, NORTHEAST SIDE SIMILAR)

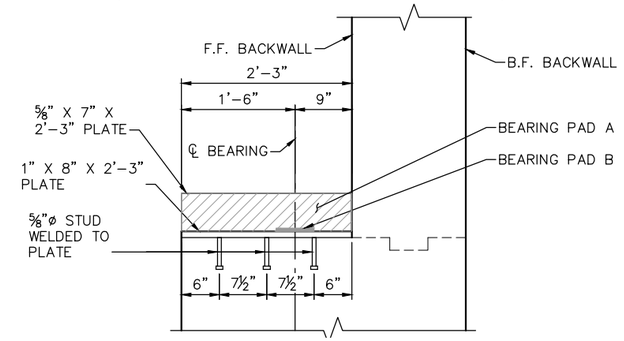

SECTION D-D

NOTES:

72 HOUR TIME DELAY REQUIRED BETWEEN ADJACENT POURS TO ALLOW FOR SHRINKAGE.

SEE SOUTH ABUTMENT DETAILS FOR BEARING PAD DIMENSIONS.

GALVANIZE STRUCTURAL STEEL AFTER FABRICATION PER MnDOT SPEC 3394.

GALVANIZE FASTENERS PER MnDOT SPEC. 3392.

STRUCTURAL STEEL SHALL COMPLY WITH MnDOT SPEC. 3306.

(1) STRUCTURAL CONCRETE (1G52).

(2) STRUCTURAL CONCRETE (3B52).

(3) CONSTRUCTION JOINT WITH 2" x 6" KEY CENTERED IN WALL.

(4) MEMBRANE WATERPROOFING SYSTEM PER SPEC. 2481.3.B.

(5) BEARING PAD A SHALL BE GLUED TO STEEL WITH CONSTRUCTION ADHESIVE.

(6) BEARING PAD B SHALL BE GLUED OT CONCRETE WITH CONSTRUCTION ADHESIVE.

NO.	DATE	BY	CHECK	DESIGN	REVISION / SUBMITTAL

DESIGNED BY: NRW | CHECKED BY: JSM

DRAWN BY: PGR | CHECKED BY: NRW

AECOM Kimley»Horn

90% SUBMISSION - 01/22/16

METROPOLITAN COUNCIL

SOUTHWEST Green Line LRT Extension

CIVIL - VOLUME 4F
CEDAR LAKE CHANNEL FREIGHT BRIDGE
BRIDGE R0694
NORTH ABUTMENT DETAILS 3

DISCIPLINE: STRUCTURES

SHEET NAME: CBRR0694-BRG-ABT-012

SHEET 15 OF 50

Jan, 16 2016 09:35 am V:\3400_ADC\CAD\SEGMENT E3\PLAN SHEETS\STRUCTURES\R0694 CLOH-FRT\CBRR0694-BRG-ABUT.dwg By: Nick.Williamson

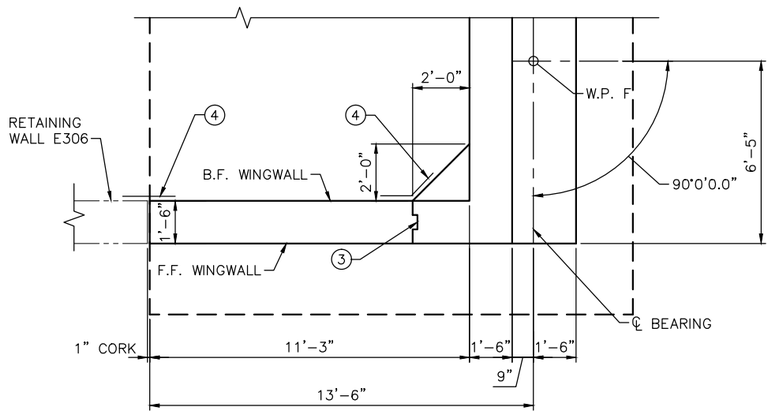

NORTHWEST WINGWALL PLAN

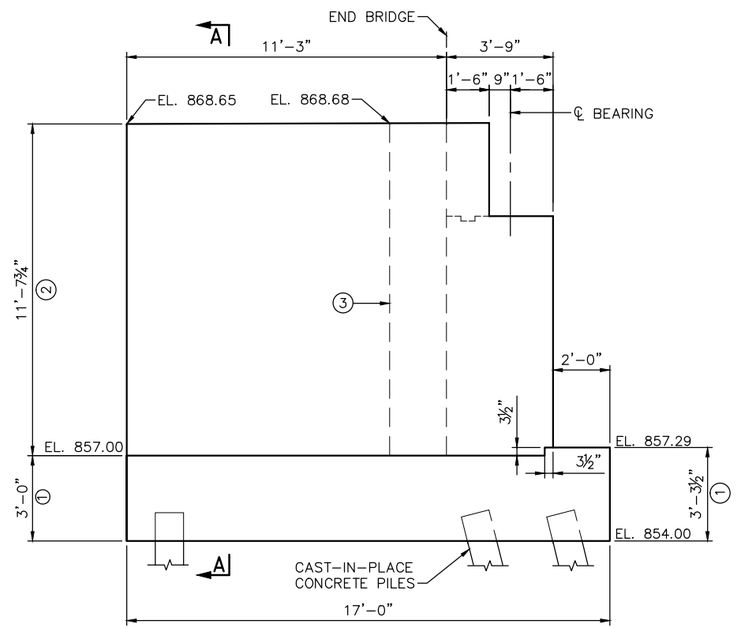

NORTHWEST WINGWALL ELEVATION

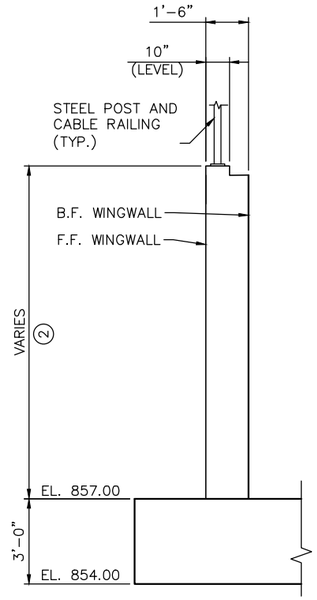

SECTION A–A

NOTES:

72 HOUR TIME DELAY REQUIRED BETWEEN ADJACENT POURS TO ALLOW FOR SHRINKAGE.

1. STRUCTURAL CONCRETE (1G52).
2. STRUCTURAL CONCRETE (3B52).
3. CONSTRUCTION JOINT WITH 2" x 6" KEY CENTERED IN WALL.
4. MEMBRANE WATERPROOFING SYSTEM PER SPEC. 2481.3.B.

NO.	DATE	BY	CHECK	DESIGN	REVISION / SUBMITTAL

DESIGNED BY: NRW | CHECKED BY: JSM
DRAWN BY: PGR | CHECKED BY: NRW

AECOM Kimley»Horn

90% SUBMISSION - 01/22/16

METROPOLITAN COUNCIL

SOUTHWEST Green Line LRT Extension

CIVIL - VOLUME 4F
CEDAR LAKE CHANNEL FREIGHT BRIDGE
BRIDGE R0694
NORTH ABUTMENT DETAILS 4

DISCIPLINE: STRUCTURES
SHEET NAME: CBRR0694-BRG-ABT-013

SHEET 16 OF 50

Jan, 16 2016 09:35 am V:\3400_ADC\CAD\SEGMENT E3\PLAN SHEETS\STRUCTURES\R0694 CLCH-FRT\CBRR0694-BRG-ABUT.dwg By: Nick.Williamson

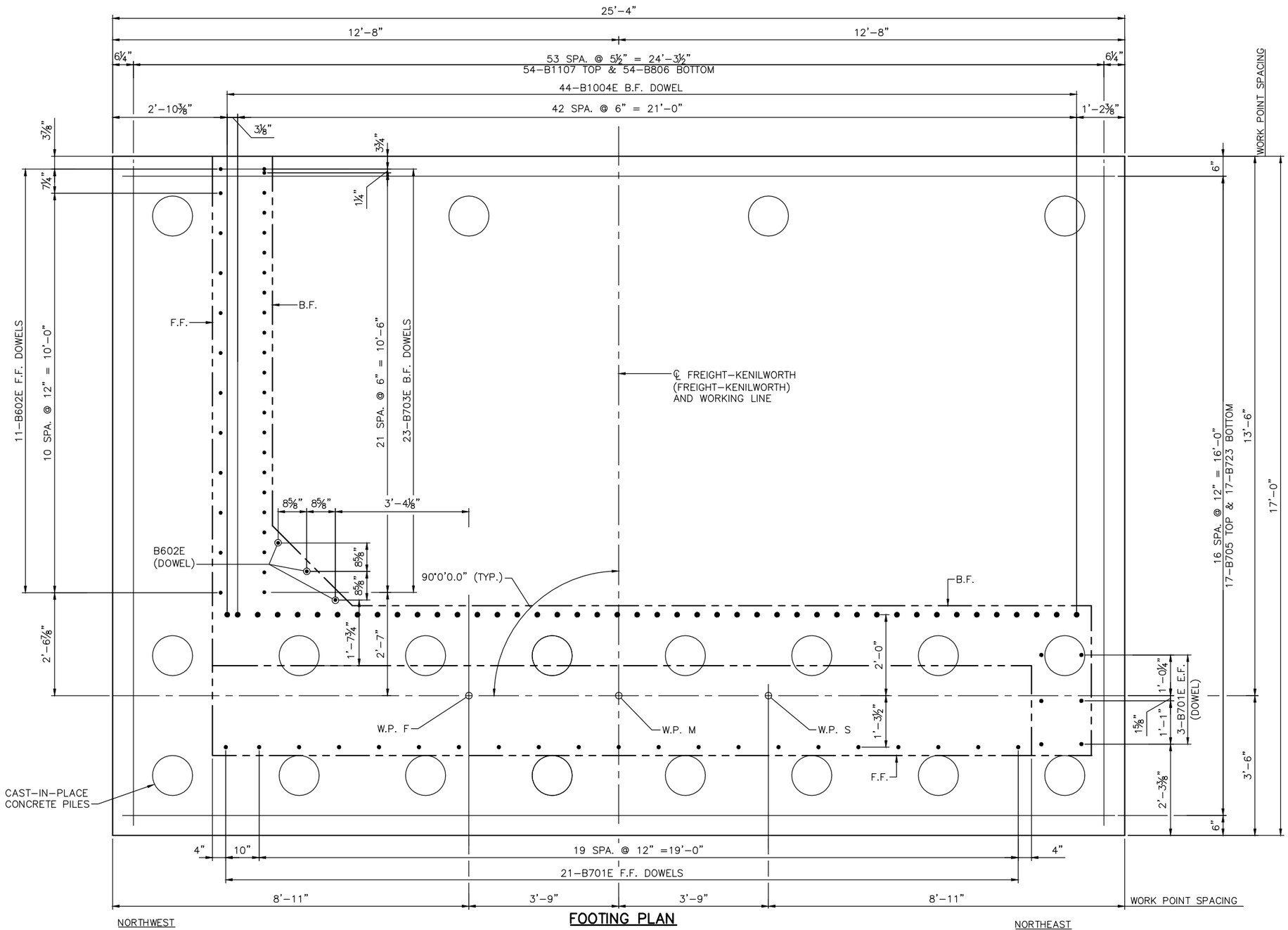

FOOTING PLAN

NOTES:

F.F. – DENOTES FRONT FACE

B.F. – DENOTES BACK FACE

E.F. – DENOTES EACH FACE

NO.	DATE	BY	CHECK	DESIGN	REVISION / SUBMITTAL

DESIGNED BY: NRW | CHECKED BY: JSM

DRAWN BY: PGR | CHECKED BY: JSM

AECOM Kimley»Horn

90% SUBMISSION - 01/22/16

METROPOLITAN COUNCIL

SOUTHWEST Green Line LRT Extension

CIVIL - VOLUME 4F
CEDAR LAKE CHANNEL FREIGHT BRIDGE
BRIDGE R0694
NORTH ABUTMENT REINFORCEMENT 1

DISCIPLINE: STRUCTURES

SHEET NAME: CBRR0694-BRG-ABT-014

SHEET 17 OF 50

Jan, 16 2016 09:35 am V:\3400_ADC\CAD\SEGMENT E3\PLAN SHEETS\STRUCTURES\R0694 CLCH-FRT\CBRR0694-BRG-ABUT.dwg By: Nick.Williamson

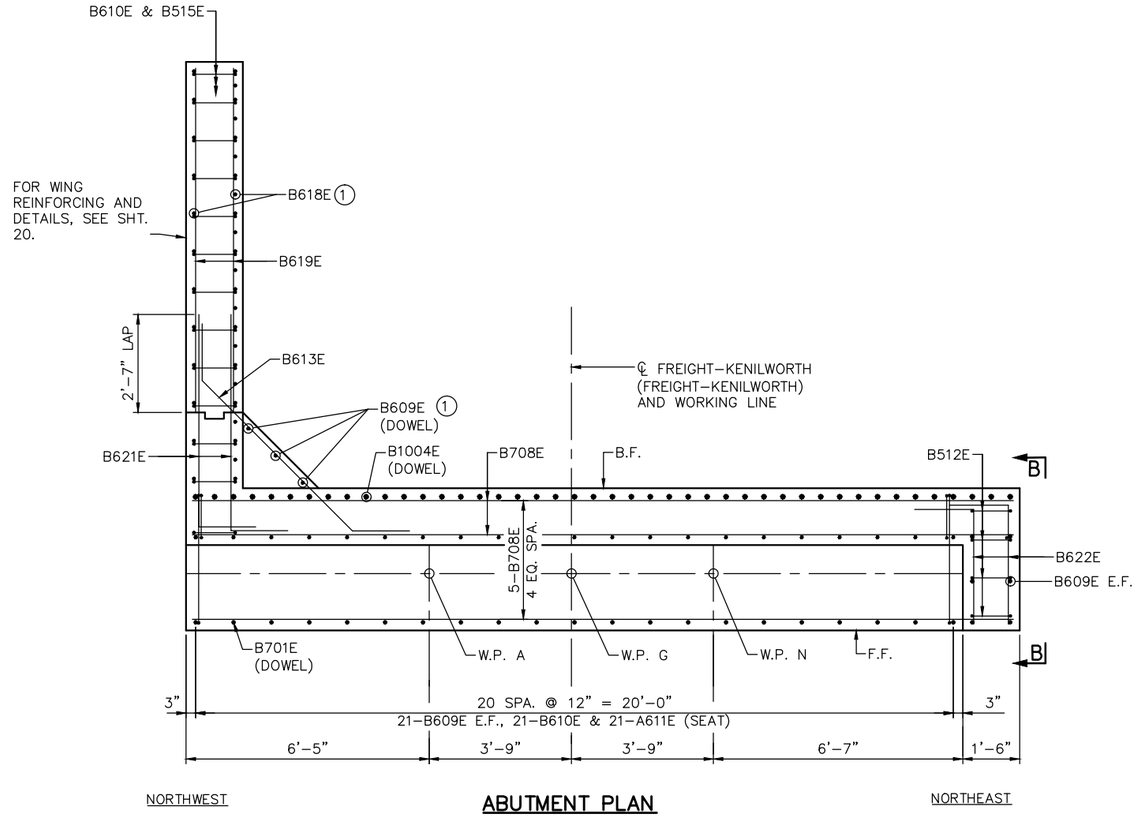

ABUTMENT PLAN

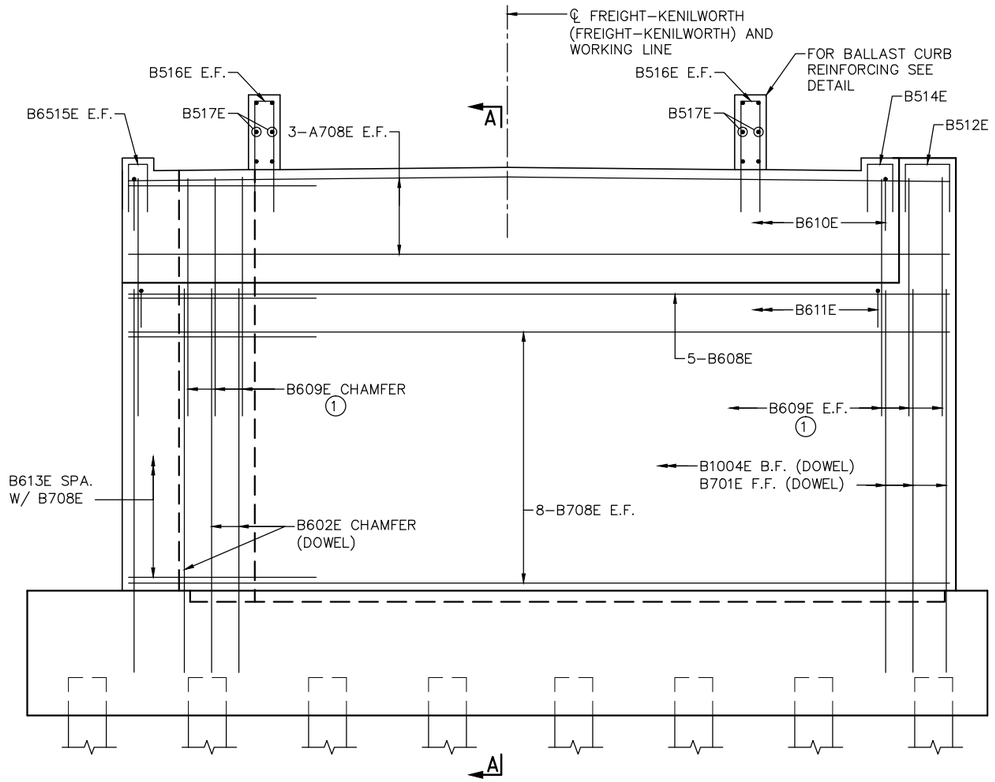

ABUTMENT ELEVATION

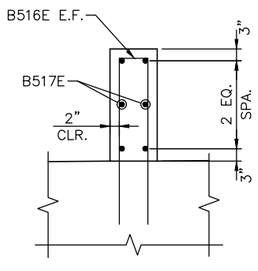

SECTION D-D

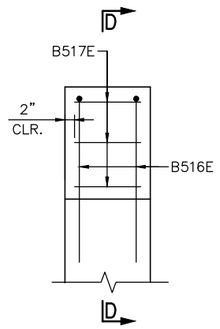

BALLAST CURB DETAIL

NOTES:

FOR SECTION A-A AND B-B SEE NEXT SHEET.

F.F. – DENOTES FRONT FACE

B.F. – DENOTES BACK FACE

E.F. – DENOTES EACH FACE

(1) SPACE WITH DOWEL BAR

NO.	DATE	BY	CHECK	DESIGN	REVISION / SUBMITTAL

DESIGNED BY: NRW CHECKED BY: JSM

DRAWN BY: PGR CHECKED BY: JSM

AECOM Kimley»Horn

90% SUBMISSION - 01/22/16

METROPOLITAN COUNCIL

SOUTHWEST Green Line LRT Extension

CIVIL - VOLUME 4F
CEDAR LAKE CHANNEL FREIGHT BRIDGE
BRIDGE R0694
NORTH ABUTMENT REINFORCEMENT 2

DISCIPLINE: STRUCTURES

SHEET NAME: CBRR0694-BRG-ABT-015

SHEET 18 OF 50

Jan. 16 2016 09:35 am V:\3400_ADC\CAD\SEGMENT E3\PLAN SHEETS\STRUCTURES\R0694 CLCH-FRT\CBRR0694-BRG-ABUT.dwg By: Nick.Williamson

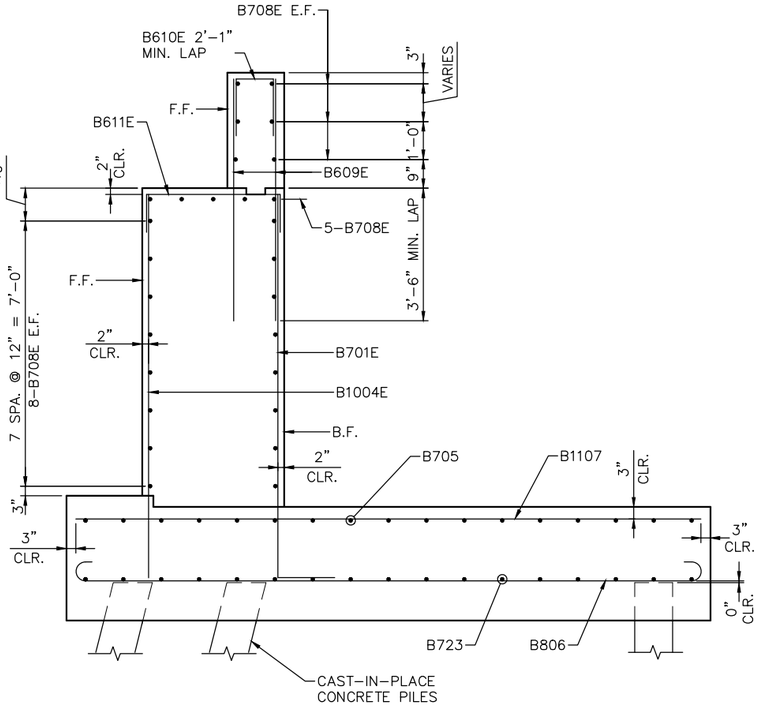

SECTION A–A

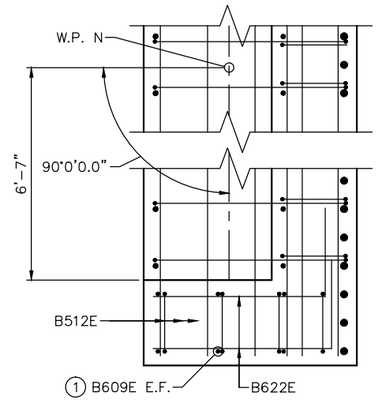

PART PLAN

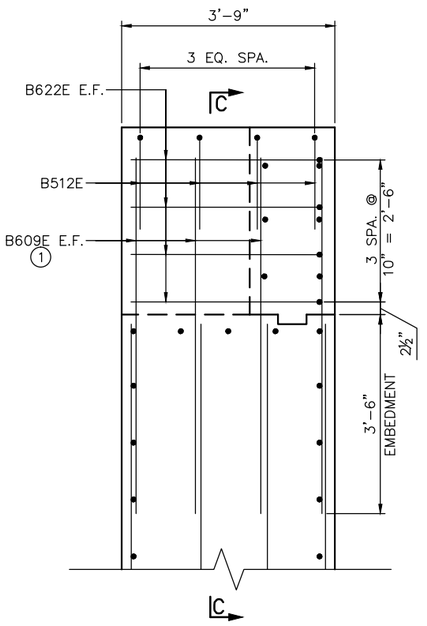

END ELEVATION B–B

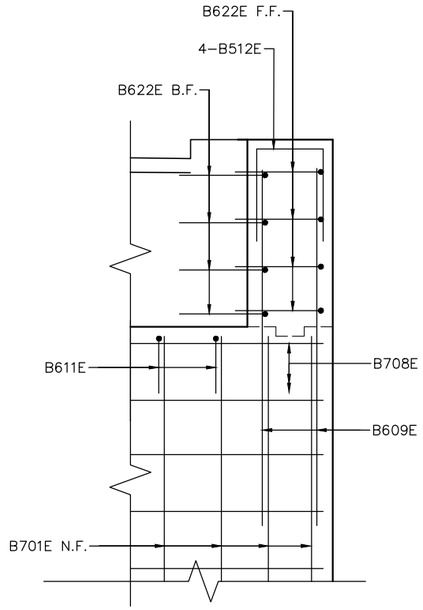

SECTION C–C

NOTES:

F.F. – DENOTES FRONT FACE

B.F. – DENOTES BACK FACE

E.F. – DENOTES EACH FACE

1 SPACE WITH DOWEL BAR

NO.	DATE	BY	CHECK	DESIGN	REVISION / SUBMITTAL

DESIGNED BY: NRW | CHECKED BY: JSM

DRAWN BY: PGR | CHECKED BY: JSM

AECOM Kimley»Horn

90% SUBMISSION - 01/22/16

METROPOLITAN COUNCIL

SOUTHWEST Green Line LRT Extension

CIVIL - VOLUME 4F
CEDAR LAKE CHANNEL FREIGHT BRIDGE
BRIDGE R0694
NORTH ABUTMENT REINFORCEMENT 3

DISCIPLINE: STRUCTURES

SHEET NAME: CBRR0694-BRG-ABT-016

SHEET 19 OF 50

Jan, 16 2016 09:35 am V:\3400_ADC\CAD\SEGMENT E3\PLAN SHEETS\STRUCTURES\R0694 CLCH-FRT\CBRR0694-BRG-ABUT.dwg By: Nick.Williamson

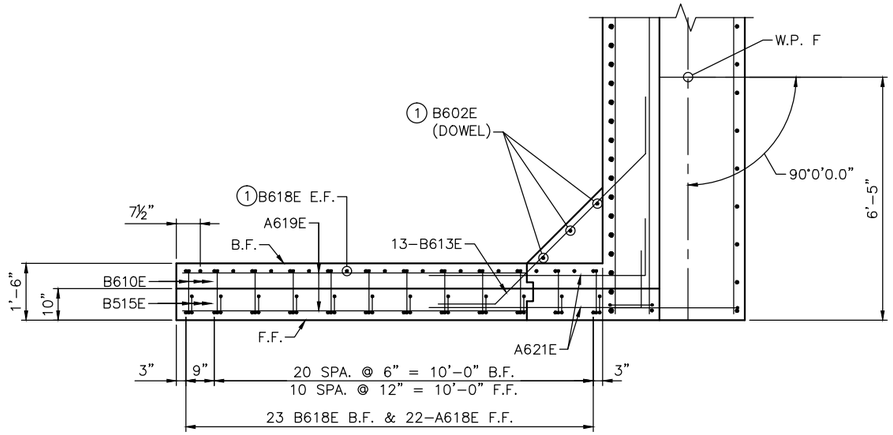

NORTHWEST WINGWALL PLAN

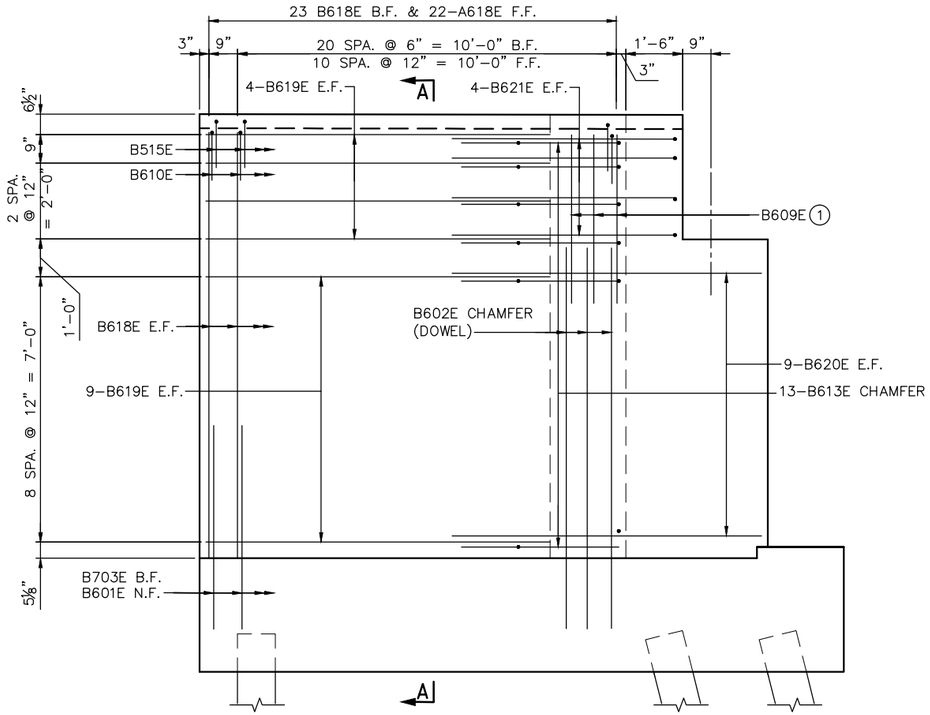

NORTHWEST WINGWALL ELEVATION

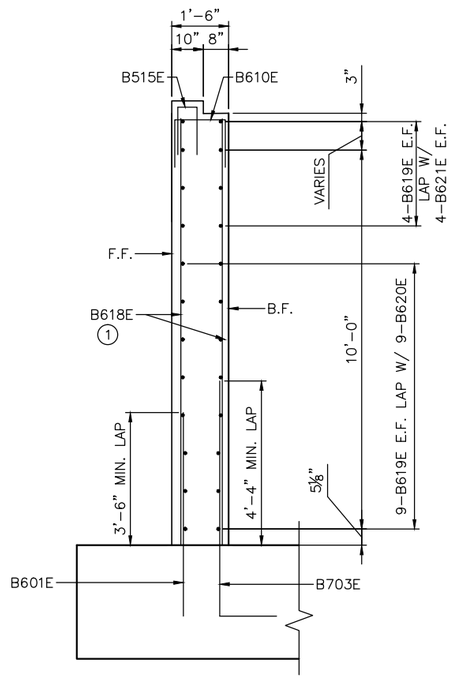

SECTION A-A

NOTES:

F.F. – DENOTES FRONT FACE

B.F. – DENOTES BACK FACE

E.F. – DENOTES EACH FACE

1 SPACE WITH DOWEL BAR

NO.	DATE	BY	CHECK	DESIGN	REVISION / SUBMITTAL

DESIGNED BY: NRW CHECKED BY: JSM

DRAWN BY: PGR CHECKED BY: JSM

AECOM Kimley»Horn

90% SUBMISSION - 01/22/16

METROPOLITAN COUNCIL

SOUTHWEST Green Line LRT Extension

CIVIL - VOLUME 4F
CEDAR LAKE CHANNEL FREIGHT BRIDGE
BRIDGE R0694
NORTH ABUTMENT REINFORCEMENT 4

DISCIPLINE: STRUCTURES

SHEET NAME: CBRR0694-BRG-ABT-017

SHEET 20 OF 50

Jan, 16 2016 09:35 am V:\3400_ADC\CAD\SEGMENT E3\PLAN SHEETS\STRUCTURES\R0694 CLOH-FRT\CBRR0694-BRG-ABUT.dwg By: Nick.Williamson

BILL OF REINFORCEMENT FOR NORTH ABUTMENT				
BAR	NO.	LENGTH	SHAPE	LOCATION
B701E	27	'-"	STR.	F.F. VERT DOWEL
B602E	17	'-"	STR.	F.F. VERT DOWEL
B703E	23	'-"	BENT	B.F. VERT DOWEL
B1004E	44	'-"	BENT	B.F. VERT DOWEL
B705	34	'-"	BENT	FOOTING TRANSVERSE
B806	54	'-"	BENT	FOOTING LONGITUDINAL
B1107	54	'-"	BENT	FOOTING LONGITUDINAL
B708E	19	'-"	STR.	ABUTMENT E.F.
B609E	45	'-"	S	E.F. BACKWALL
B610E	33	'-"	BENT	WINGWALL & BACKWALL TIE
B611E	21	'-"	BENT	ABUTMENT SEAT
B512E	4	'-"	BENT	BACKWALL TIE
B613E	8	'-"	BENT	CHAMFER
B514E	2	'-"	BENT	CURB
B515E	2	'-"	BENT	CURB
B516E	4	'-"	BENT	BALLAST WALL
B517E	12	'-"	STR.	BALLAST WALL
B618E	34	'-"	STR.	NW WINGWALL VERT.
B619E	26	'-"	STR.	NW WINGWALL HORZ.
B620E	18	'-"	STR.	NW WINGWALL HORZ.
B621E	8	'-"	BENT	NW WINGWALL HORZ.
B622E	8	'-"	BENT	NW WINGWALL HORZ.
B723	17	'-"	BENT	FOOTING TRANSVERSE

Jan, 16 2016 09:35 am V:\3400_ADC\CAD\SEGMENT E3\PLAN SHEETS\STRUCTURES\R0694 CLCH-FRT\CBRR0694-BRG-ABUT.dwg By: Nick.Williamson

NO.	DATE	BY	CHECK	DESIGN	REVISION / SUBMITTAL

DESIGNED BY: NRW | CHECKED BY: JSM
DRAWN BY: PGR | CHECKED BY: JSM

AECOM Kimley»Horn

90% SUBMISSION - 01/22/16

METROPOLITAN COUNCIL

SOUTHWEST Green Line LRT Extension

CIVIL - VOLUME 4F
CEDAR LAKE CHANNEL FREIGHT BRIDGE
BRIDGE R0694
NORTH ABUTMENT REINFORCEMENT 5

DISCIPLINE: STRUCTURES

SHEET NAME: CBRR0694-BRG-ABT-018

SHEET 21 OF 50

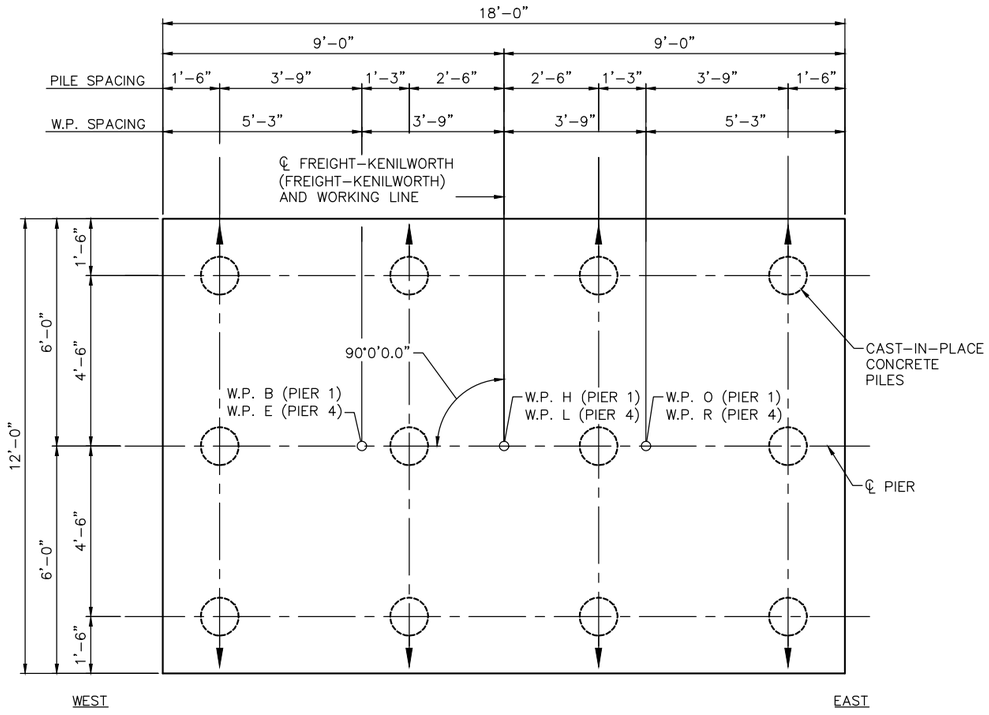

FOOTING PLAN
PIER 1 AND 4

GENERAL PILE NOTES (PER PIER)

12 CAST-IN-PLACE CONCRETE PILES EST. 99 FT. LENGTH PIER 1
12 CAST-IN-PLACE CONCRETE PILES EST. 110 FT. LENGTH PIER 4
NO TEST PILES REQUIRED AT THESE PIERS

PILE SPACING SHOWN IS AT BOTTOM OF FOOTING.

PILES MARKED THUS ○ TO BE BATTERED 3" PER FOOT IN DIRECTION SHOWN.

PILES TO HAVE A NOMINAL DIAMETER OF 12" AND ⅜" WALL THICKNESS.

FOR PILE SPLICE DETAILS SEE DETAIL B201.

PIER 1 AND 4 COMPUTED PILE LOAD - TONS/PILE	
DEAD LOAD + EARTH PRESSURE	21
LIVE LOAD	16
OVERTURNING	30
TOTAL LOAD	67
* BASED ON GROUP III LOADING (SERVICE LOAD) PER AREMA CHAPTER 8 SECTION 2.2.4	

REQUIRED PILE TEST LOAD	
FIELD CONTROL METHOD	TEST LOAD
PDA	134

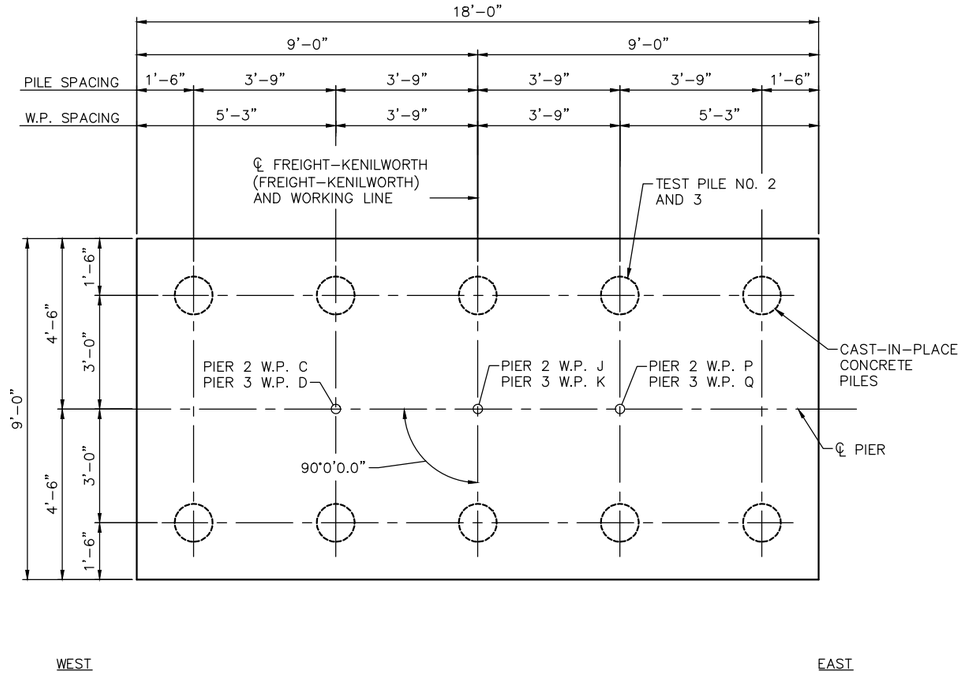

FOOTING PLAN
PIER 2 AND 3

GENERAL PILE NOTES (PER PILE)

1 CAST-IN-PLACE CONCRETE TEST PILES 120 FT. LONG PIER 2
1 CAST-IN-PLACE CONCRETE TEST PILES 125 FT. LONG PIER 3
9 CAST-IN-PLACE CONCRETE PILES EST. 110 FT. LENGTH PIER 2
9 CAST-IN-PLACE CONCRETE PILES EST. 115 FT. LENGTH PIER 3
10 CAST-IN-PLACE CONCRETE PILES REQ'D PER PIER.

PILE SPACING SHOWN IS AT BOTTOM OF FOOTING.

PILES TO HAVE A NOMINAL DIAMETER OF 12" AND ⅜" WALL THICKNESS.

FOR PILE SPLICE DETAILS SEE DETAIL B201.

PIER 2 AND 3 COMPUTED PILE LOAD - TONS/PILE	
DEAD LOAD + EARTH PRESSURE	27
LIVE LOAD	22
OVERTURNING	27
TOTAL LOAD	76
* BASED ON GROUP III LOADING (SERVICE LOAD) PER AREMA CHAPTER 8 SECTION 2.2.4	

REQUIRED PILE TEST LOAD	
FIELD CONTROL METHOD	TEST LOAD
PDA	152

NO.	DATE	BY	CHECK	DESIGN	REVISION / SUBMITTAL

DESIGNED BY: NRW | CHECKED BY: JSM
DRAWN BY: PGR | CHECKED BY: NRW

AECOM Kimley»Horn

90% SUBMISSION - 01/22/16

METROPOLITAN COUNCIL

SOUTHWEST Green Line LRT Extension

CIVIL - VOLUME 4F
CEDAR LAKE CHANNEL FREIGHT BRIDGE
BRIDGE R0694
PIER DETAILS 1

DISCIPLINE: STRUCTURES
SHEET NAME: CBRR0694-BRG-PIR-001

SHEET 22 OF 50

Jan, 16 2016 09:35 am V:\3400_ADC\CAD\SEGMENT E3\PLAN SHEETS\STRUCTURES\R0694 CLCH-FRT\CBRR0694-BRG-PIER.dwg By: Nick.Williamson

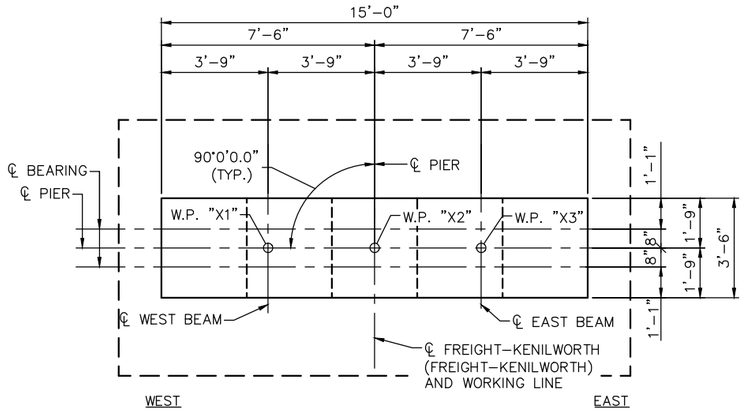

PIER 1 AND 4 CAP PLAN

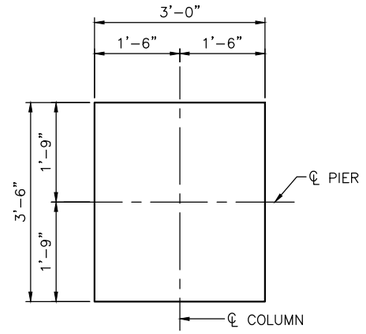

PIER 1 AND 4 COLUMN SECTION

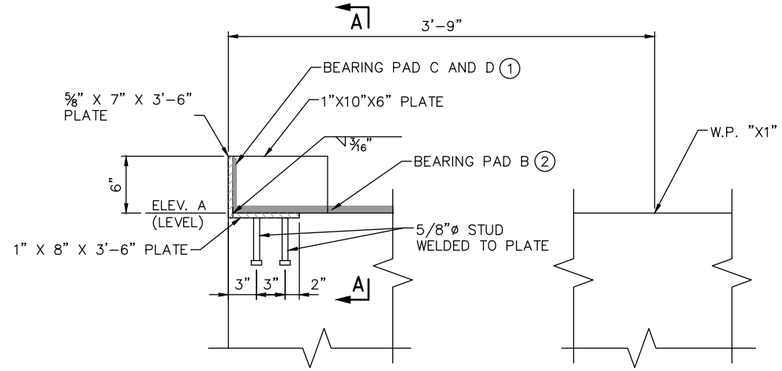

KEEPER ANGLE DETAIL

(WEST SIDE SHOWN, EAST SIDE SIMILAR)

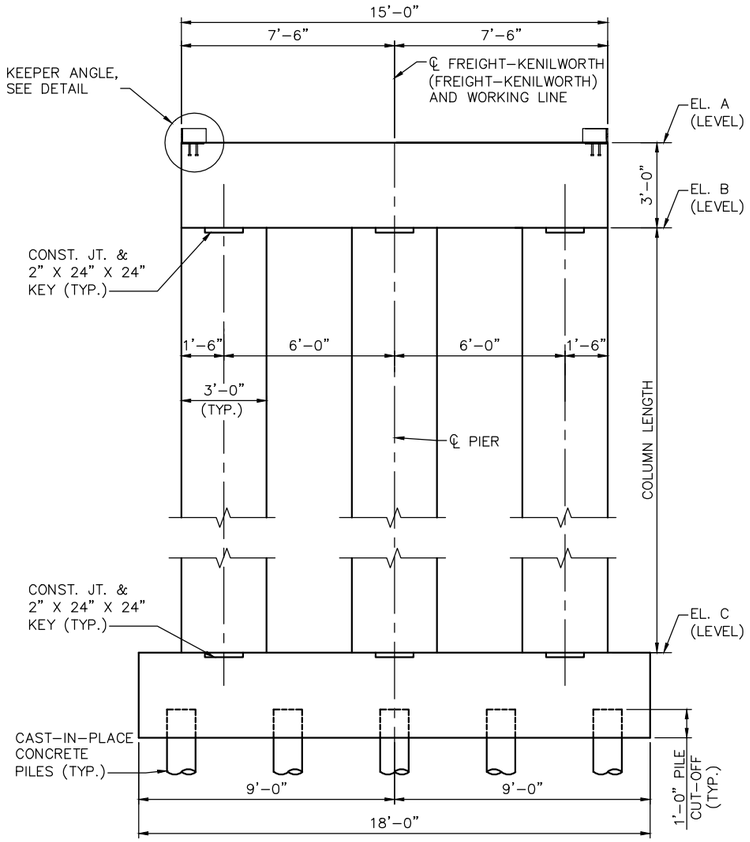

PIER 1 AND 4 ELEVATION

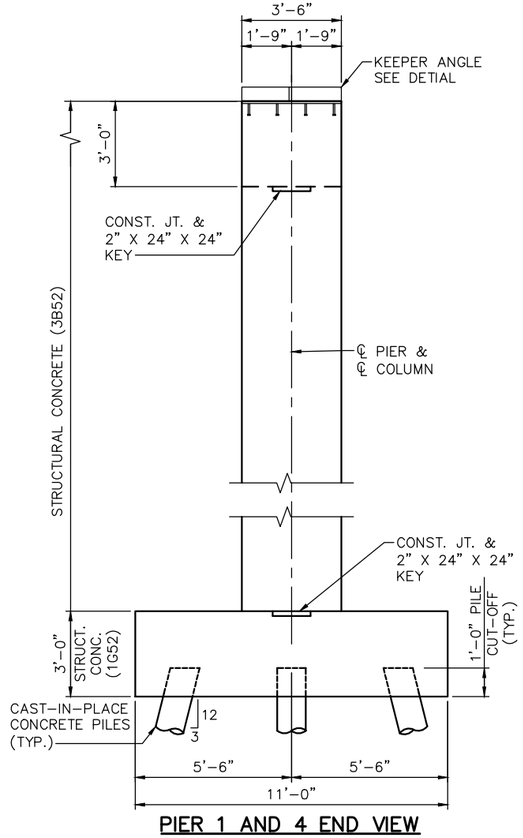

PIER 1 AND 4 END VIEW

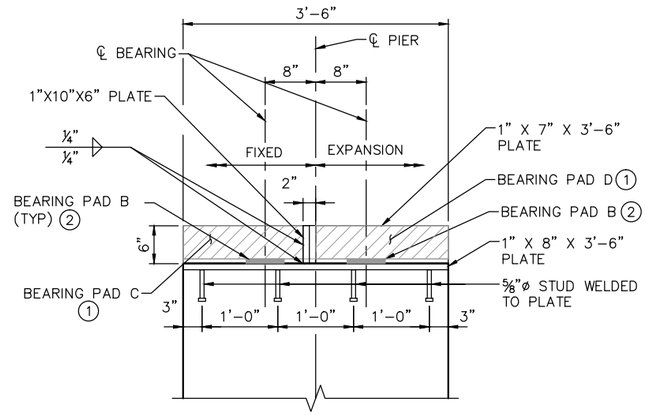

SECTION A–A

NOTES:

72 HOUR TIME DELAY REQUIRED BETWEEN ADJACENT POURS TO ALLOW FOR SHRINKAGE.

SEE SOUTH ABUTMENT DETAILS FOR BEARING PAD DIMENSIONS.

GALVANIZE STRUCTURAL STEEL AFTER FABRICATION PER MnDOT SPEC. 3394.

GALVANIZE FASTENERS PER MnDOT SPEC. 3392

STRUCTURAL STEEL SHALL COMPLY WITH MnDOT SPEC. 3306.

(1) BEARING PADS C AND D SHALL BE GLUED TO STEEL WITH CONSTRUCTION ADHESIVE.

(2) BEARING PAD B SHALL BE GLUED TO CONCRETE WITH CONSTRUCTION ADHESIVE.

PIER 1 AND PIER 4 DATA TABLE

LOCATION	WP "X1"	WP "X2"	WP "X3"	EL. A	EL. B	EL. C	COLUMN LENGTH
PIER 1	B	H	O	865.71	862.71	850.00	12.71
PIER 4	E	L	R	865.48	862.48	850.00	12.48

NO.	DATE	BY	CHECK	DESIGN	REVISION / SUBMITTAL

DESIGNED BY: NRW | CHECKED BY: JSM

DRAWN BY: PGR | CHECKED BY: NRW

AECOM Kimley»Horn

90% SUBMISSION - 01/22/16

METROPOLITAN COUNCIL

SOUTHWEST Green Line LRT Extension

CIVIL - VOLUME 4F
CEDAR LAKE CHANNEL FREIGHT BRIDGE
BRIDGE R0694
PIER DETAILS 2

DISCIPLINE: STRUCTURES

SHEET NAME: CBRR0694-BRG-PIR-002

SHEET 23 OF 50

Jan, 16 2016 09:35 am V:\3400_ADC\CAD\SEGMENT E3\PLAN SHEETS\STRUCTURES\R0694 CLOH-FRT\CBRR0694-BRG-

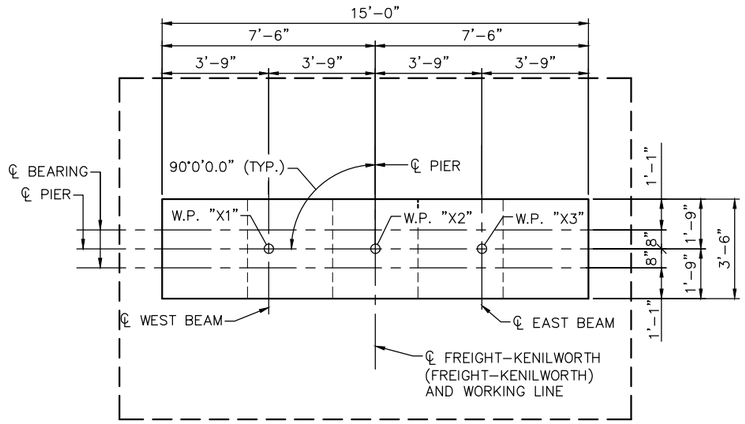

PIER 2 AND 3 CAP PLAN

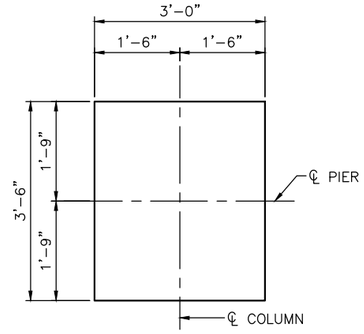

PIER 2 AND 3 COLUMN SECTION

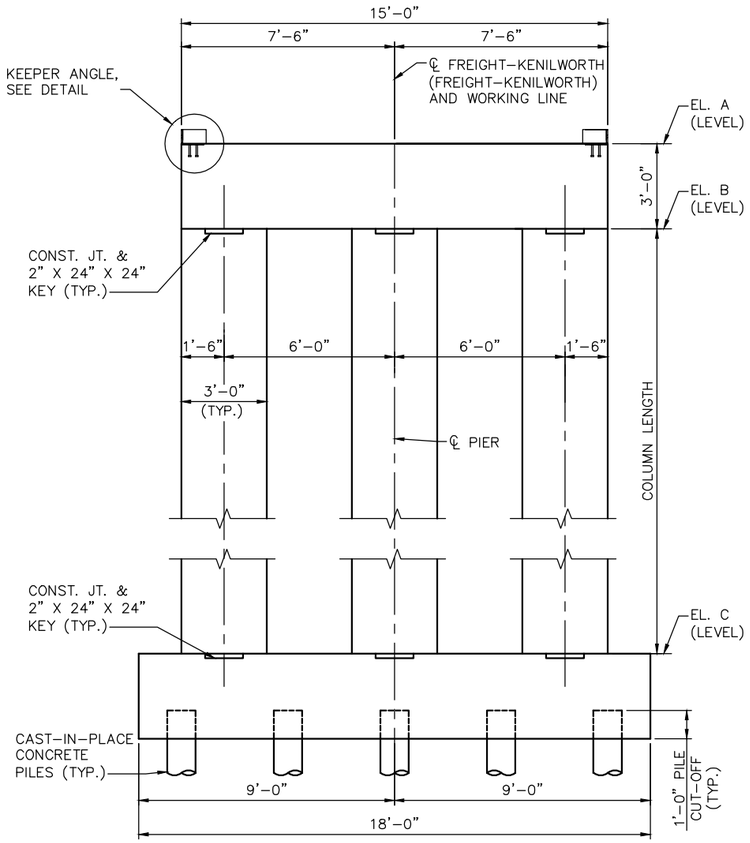

PIER 2 AND 3 ELEVATION

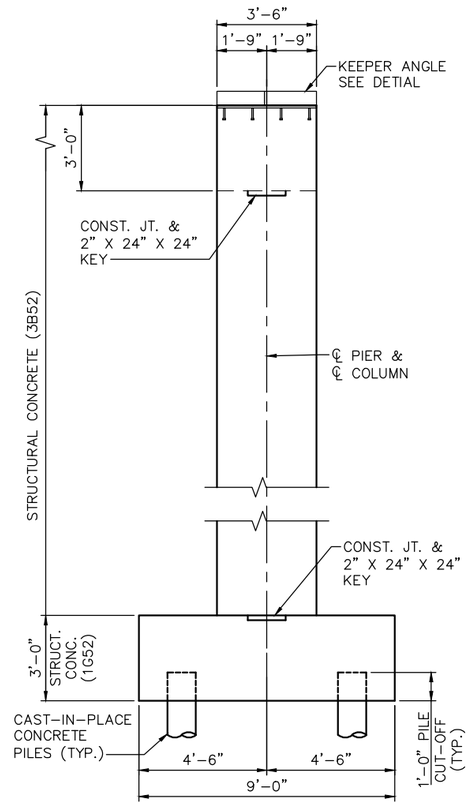

PIER 2 AND 3 END VIEW

NOTES:

72 HOUR TIME DELAY REQUIRED BETWEEN ADJACENT POURS TO ALLOW FOR SHRINKAGE.

SEE PIER DETAILS 1 FOR KEEPER ANGLE DETAIL.

SEE SOUTH ABUTMENT DETAILS FOR BEARING PAD DIMENSIONS.

(1) BEARING PADS C AND D SHALL BE GLUED TO STEEL WITH CONSTRUCTION ADHESIVE.

(2) BEARING PAD B SHALL BE GLUED TO CONCRETE WITH CONSTRUCTION ADHESIVE.

PIER 2 AND PIER 3 DATA TABLE

LOCATION	WP "X1"	WP "X2"	WP "X3"	EL. A	EL. B	EL. C	COLUMN LENGTH
PIER 2	C	J	P	865.64	862.64	846.50	16.14
PIER 3	D	K	Q	865.55	862.55	846.50	16.05

NO.	DATE	BY	CHECK	DESIGN	REVISION / SUBMITTAL

DESIGNED BY: NRW | CHECKED BY: JSM
DRAWN BY: PGR | CHECKED BY: NRW

AECOM Kimley»Horn

90% SUBMISSION - 01/22/16

METROPOLITAN COUNCIL

SOUTHWEST Green Line LRT Extension

CIVIL - VOLUME 4F
CEDAR LAKE CHANNEL FREIGHT BRIDGE
BRIDGE R0694
PIER DETAILS 3

DISCIPLINE: STRUCTURES

SHEET NAME: CBRR0694-BRG-PIR-003

SHEET 24 OF 50

Jan, 16 2016 09:35 am V:\3400_ADC\CAD\SEGMENT E3\PLAN SHEETS\STRUCTURES\R0694 CLCH-FRT\CBRR0694-BRG-PIER.dwg By: Nick.Williamson

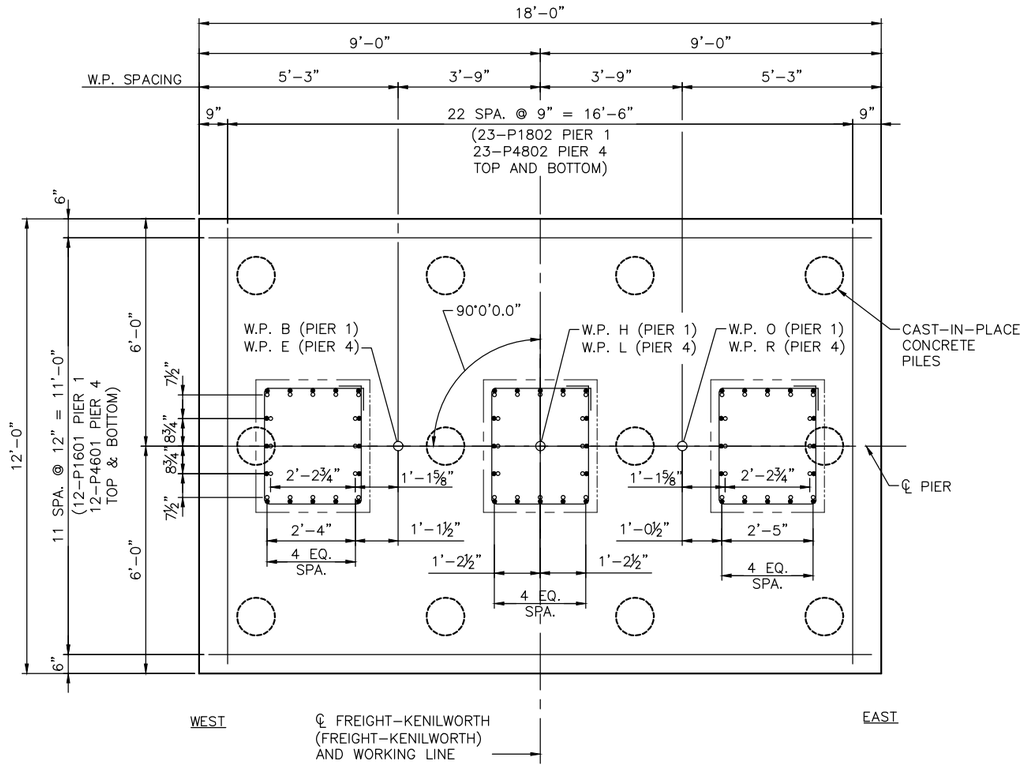

FOOTING PLAN
PIER 1 AND 4

○ – DENOTES 48-P1903E PIER 1 & 48-P4903E PIER 4 IN FOOTING.

● – DENOTES 48-P1904E PIER 1 & 48-P4904E PIER 4 IN COLUMN.

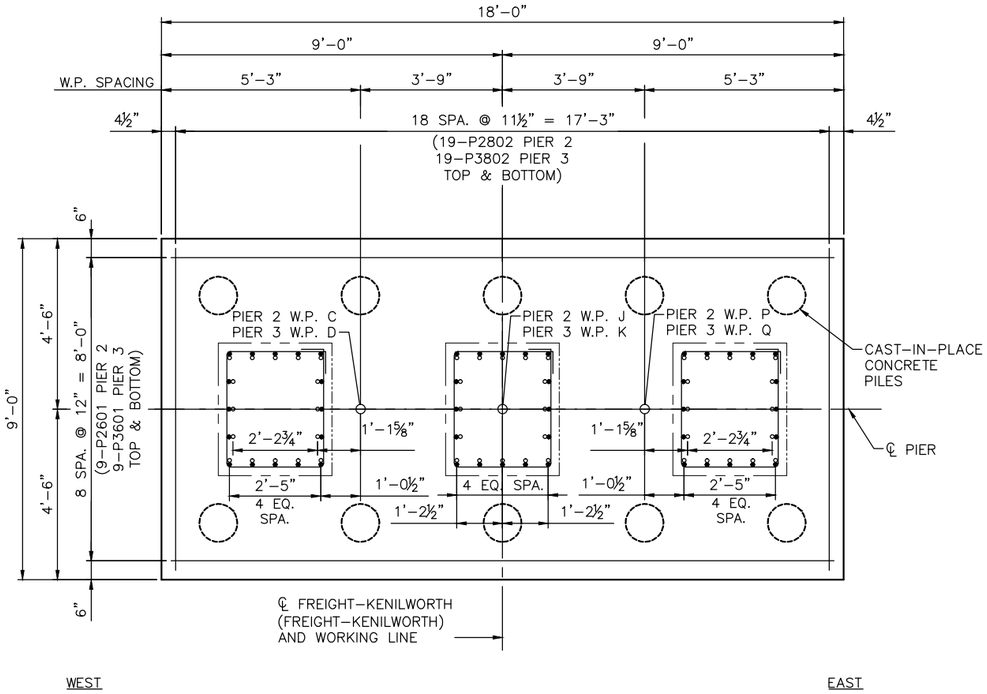

FOOTING PLAN
PIER 2 AND 3

○ – DENOTES 48-P2903E PIER 2 & 48-P3904E PIER 3 IN FOOTING.

● – DENOTES 48-P1903E PIER 2 & 48-P4904E PIER 3 IN COLUMN.

NO.	DATE	BY	CHECK	DESIGN	REVISION / SUBMITTAL

DESIGNED BY: NRW | CHECKED BY: JSM
DRAWN BY: PGR | CHECKED BY: JSM

AECOM Kimley»Horn

90% SUBMISSION - 01/22/16

METROPOLITAN COUNCIL

SOUTHWEST Green Line LRT Extension

CIVIL - VOLUME 4F
CEDAR LAKE CHANNEL FREIGHT BRIDGE
BRIDGE R0694
PIER REINFORCEMENT 1

DISCIPLINE: STRUCTURES
SHEET NAME: CBRR0694-BRG-PIR-004

SHEET 25 OF 50

Jan, 16 2016 09:35 am V:\3400_ADC\CAD\SEGMENT E3\PLAN SHEETS\STRUCTURES\R0694 CLCH-FRT\CBRR0694-BRG-PIER.dwg By: Nick.Williamson

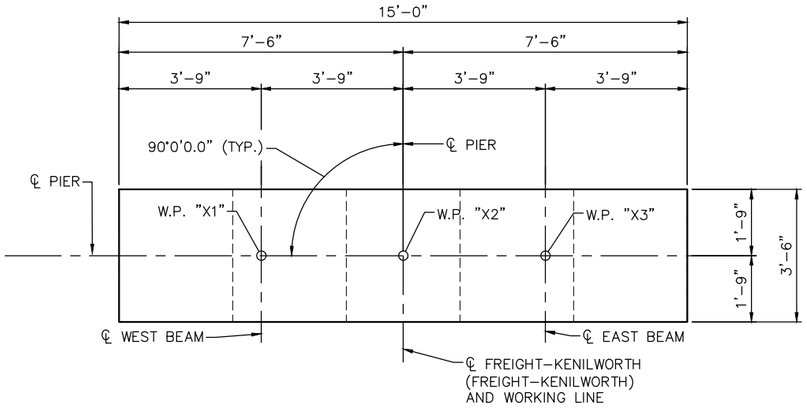

PIER 1 AND 4 CAP PLAN

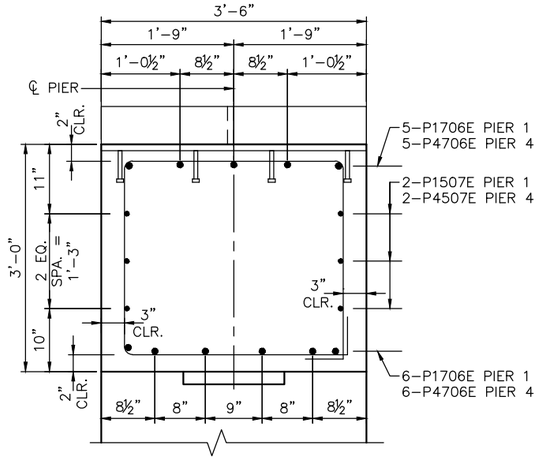

SECTION A-A

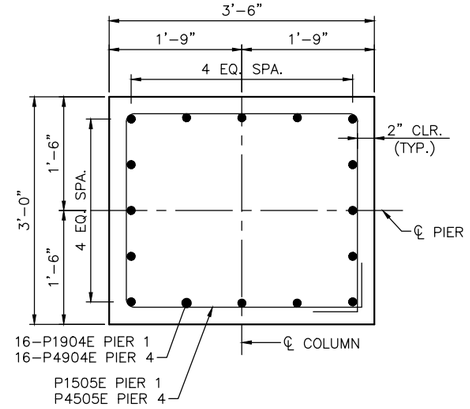

SECTION B-B

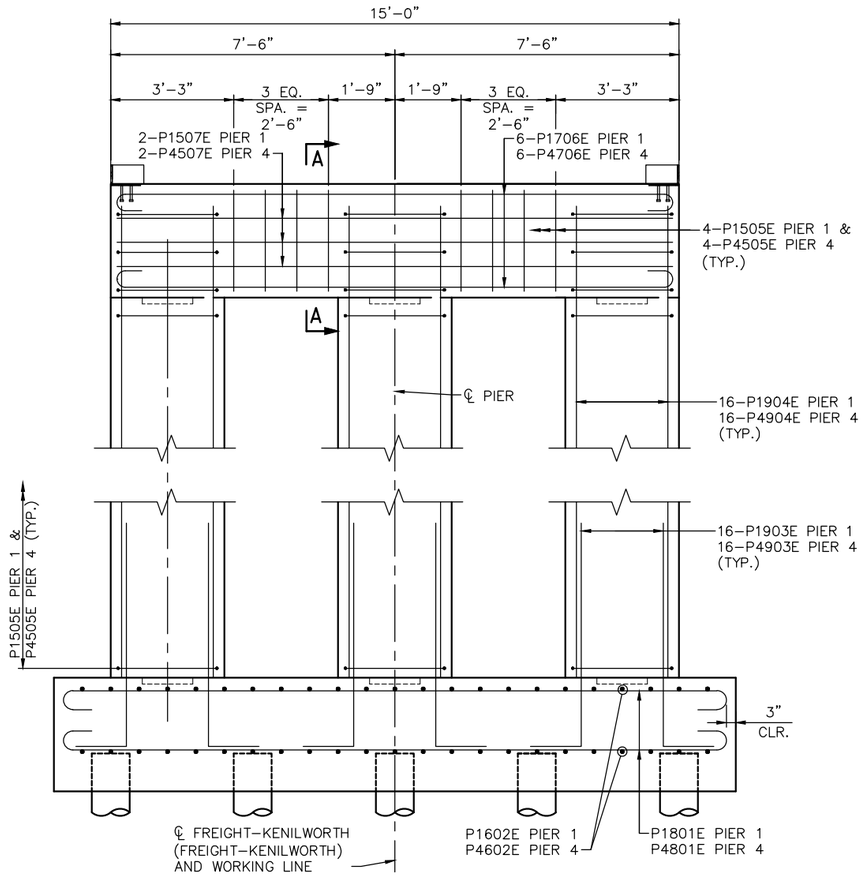

PIER 1 AND 4 ELEVATION

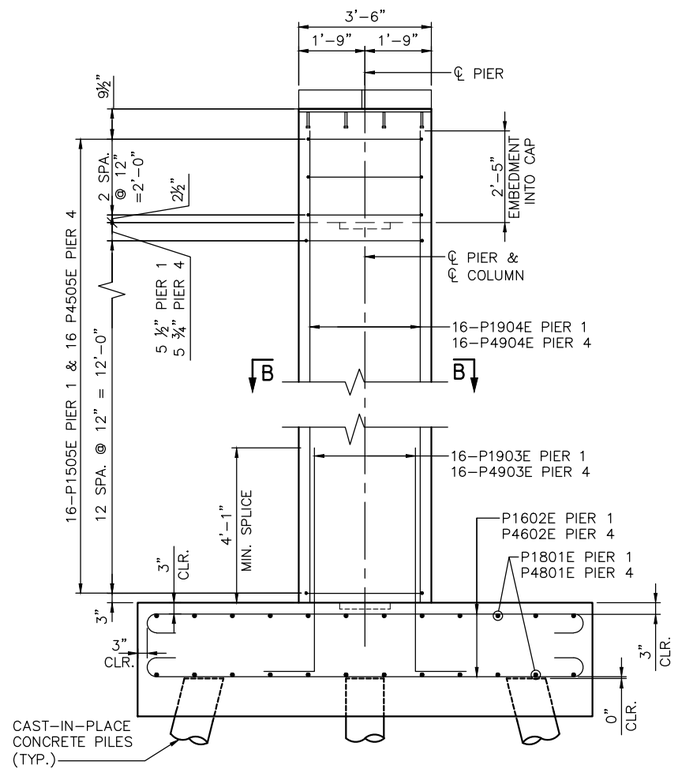

PIER 1 AND 4 END VIEW

NO.	DATE	BY	CHECK	DESIGN	REVISION / SUBMITTAL

DESIGNED BY: NRW | CHECKED BY: JSM
DRAWN BY: PGR | CHECKED BY: JSM

AECOM Kimley»Horn

90% SUBMISSION - 01/22/16

METROPOLITAN COUNCIL

SOUTHWEST Green Line LRT Extension

CIVIL - VOLUME 4F
CEDAR LAKE CHANNEL FREIGHT BRIDGE
BRIDGE R0694
PIER REINFORCEMENT 2

DISCIPLINE: STRUCTURES
SHEET NAME: CBRR0694-BRG-PIR-005

SHEET 26 OF 50

Jan, 16 2016 09:35 am V:\3400_ADC\CAD\SEGMENT E3\PLAN SHEETS\STRUCTURES\R0694 CLCH-FRT\CBRR0694-BRG-PIER.dwg By: Nick.Williamson

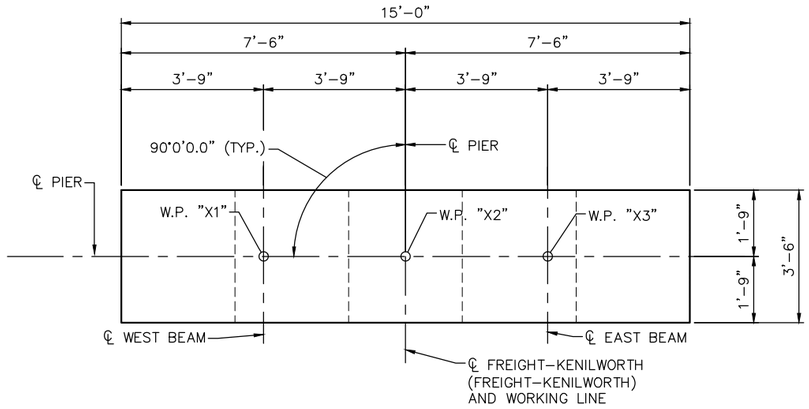

WEST

PIER 2 AND 3 CAP PLAN

EAST

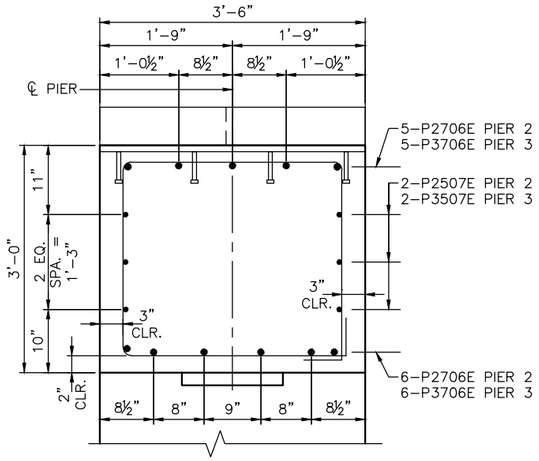

SECTION A–A

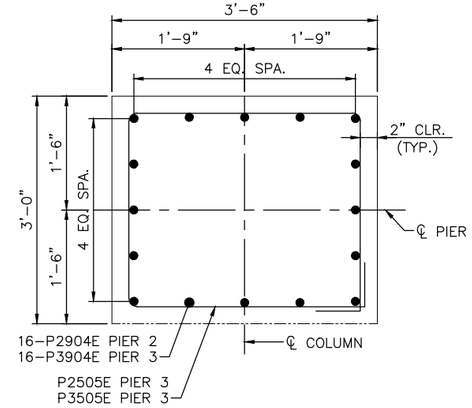

SECTION B–B

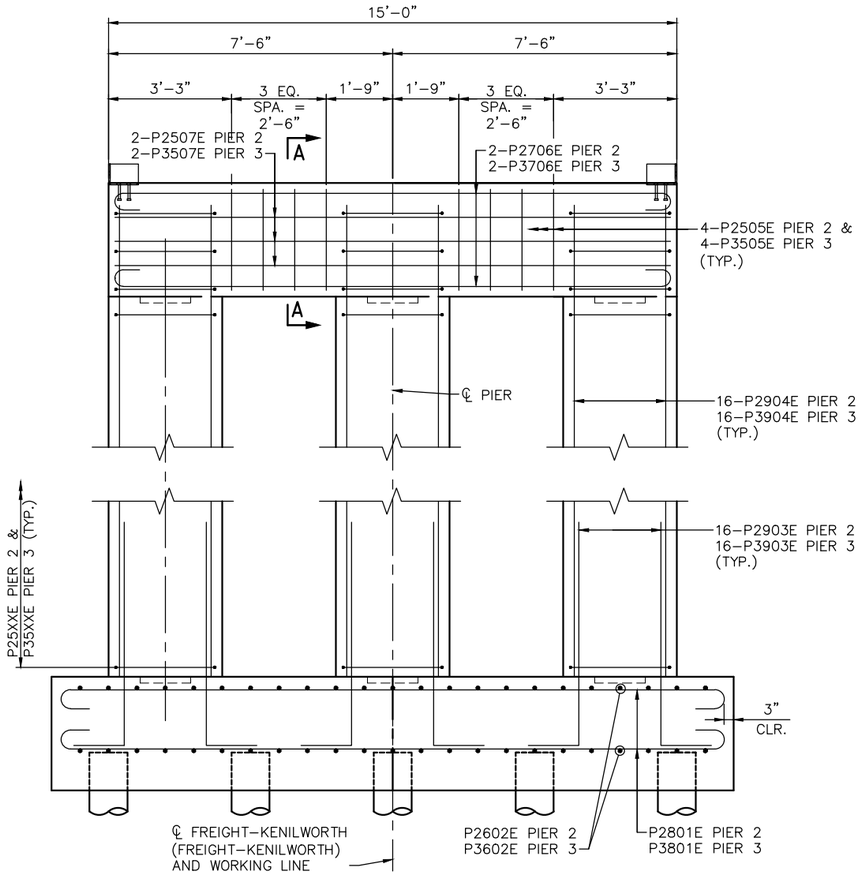

PIER 2 AND 3 ELEVATION

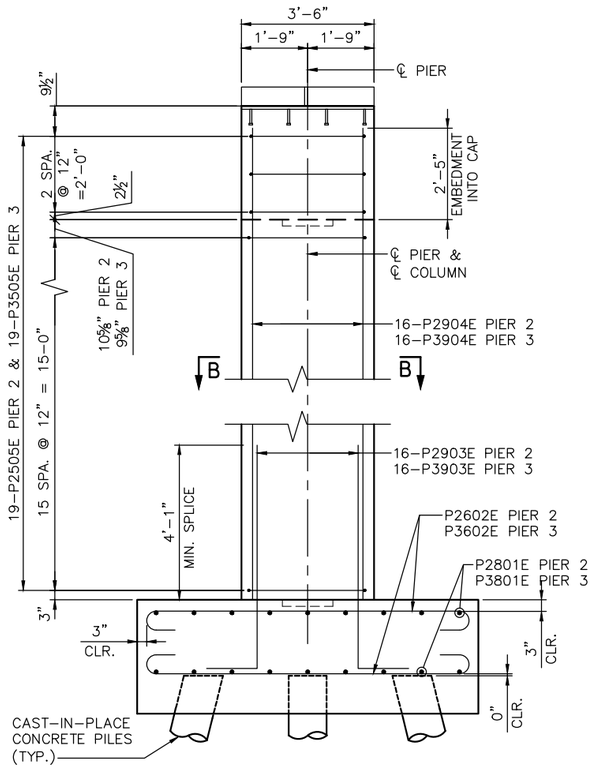

END VIEW

NO.	DATE	BY	CHECK	DESIGN	REVISION / SUBMITTAL

DESIGNED BY: NRW | CHECKED BY: JSM
DRAWN BY: PGR | CHECKED BY: JSM

AECOM Kimley»Horn

90% SUBMISSION - 01/22/16

METROPOLITAN COUNCIL

SOUTHWEST Green Line LRT Extension

CIVIL - VOLUME 4F
CEDAR LAKE CHANNEL FREIGHT BRIDGE
BRIDGE R0694
PIER REINFORCEMENT 3

DISCIPLINE: STRUCTURES

SHEET NAME: CBRR0694-BRG-PIR-006

SHEET 27 OF 50

Jan, 16 2016 09:36 am V:\3400_ADC\CAD\SEGMENT E3\PLAN SHEETS\STRUCTURES\R0694 CLCH-FRT\CBRR0694-BRG-PIER.dwg By: Nick.Williamson

BILL OF REINFORCEMENT FOR PIER 1				
BAR	NO.	LENGTH	SHAPE	LOCATION
P1601	12	'-"	BENT	FOOTING TRANSVERSE T&B
P1802	2	'-"	BENT	FOOTING LONGITUDINAL T&B
P1903E	2	'-"	STR.	FOOTING VERTICAL DOWEL
P1904E	32	'-"	STR.	COLUMN VERTICAL
P1Y05E	56	'-"	BENT	COLUMN TIE
P1706E	28	'-"	BENT	CAP HORIZONTAL
P1507E	14	'-"	STR.	CAP HORIZONTAL

BILL OF REINFORCEMENT FOR PIER 2				
BAR	NO.	LENGTH	SHAPE	LOCATION
P2601	12	'-"	BENT	FOOTING TRANSVERSE T&B
P2802	2	'-"	BENT	FOOTING LONGITUDINAL T&B
P2903E	2	'-"	STR.	FOOTING VERTICAL DOWEL
P2904E	32	'-"	STR.	COLUMN VERTICAL
P2Y05E	56	'-"	BENT	COLUMN TIE
P2706E	28	'-"	BENT	CAP HORIZONTAL
P2507E	14	'-"	STR.	CAP HORIZONTAL

BILL OF REINFORCEMENT FOR PIER 3				
BAR	NO.	LENGTH	SHAPE	LOCATION
P3601	12	'-"	BENT	FOOTING TRANSVERSE T&B
P3802	2	'-"	BENT	FOOTING LONGITUDINAL T&B
P3903E	2	'-"	STR.	FOOTING VERTICAL DOWEL
P3904E	32	'-"	STR.	COLUMN VERTICAL
P3Y05E	56	'-"	BENT	COLUMN TIE
P3706E	28	'-"	BENT	CAP HORIZONTAL
P3507E	14	'-"	STR.	CAP HORIZONTAL

BILL OF REINFORCEMENT FOR PIER 4				
BAR	NO.	LENGTH	SHAPE	LOCATION
P4601	12	'-"	BENT	FOOTING TRANSVERSE T&B
P4802	2	'-"	BENT	FOOTING LONGITUDINAL T&B
P4903E	2	'-"	STR.	FOOTING VERTICAL DOWEL
P4904E	32	'-"	STR.	COLUMN VERTICAL
P4Y05E	56	'-"	BENT	COLUMN TIE
P4706E	28	'-"	BENT	CAP HORIZONTAL
P4507E	14	'-"	STR.	CAP HORIZONTAL

Jan, 16 2016 09:36 am V:\3400_ADC\CAD\SEGMENT E3\PLAN SHEETS\STRUCTURES\R0694 CLCH-FRT\CBRR0694-BRG-PIER.dwg By: Nick.Williamson

NO.	DATE	BY	CHECK	DESIGN	REVISION / SUBMITTAL

DESIGNED BY: NRW | CHECKED BY: JSM
DRAWN BY: PGR | CHECKED BY: JSM

AECOM Kimley»Horn

90% SUBMISSION - 01/22/16

METROPOLITAN COUNCIL

SOUTHWEST Green Line LRT Extension

CIVIL - VOLUME 4F
CEDAR LAKE CHANNEL FREIGHT BRIDGE
BRIDGE R0694
PIER REINFORCEMENT 4

DISCIPLINE: STRUCTURES

SHEET NAME: CBRR0694-BRG-PIR-007

SHEET 28 OF 50

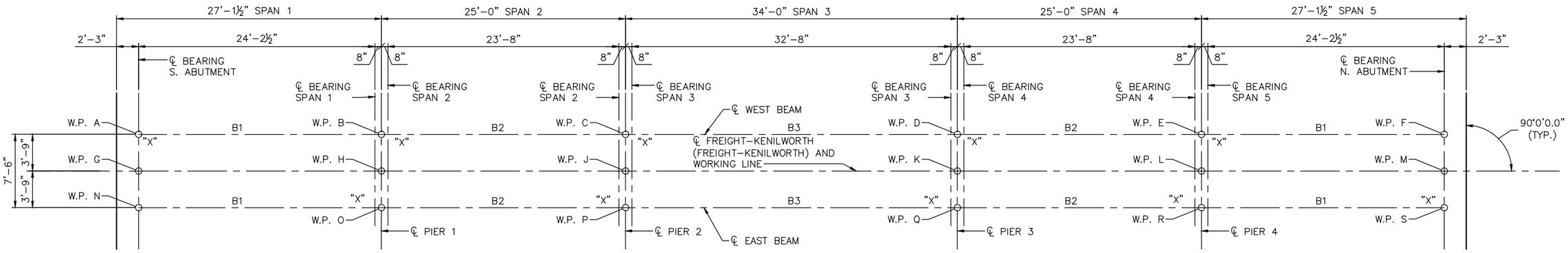

FRAMING PLAN

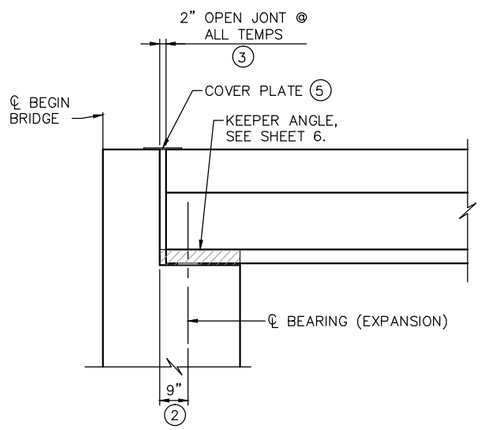

SOUTH ABUTMENT

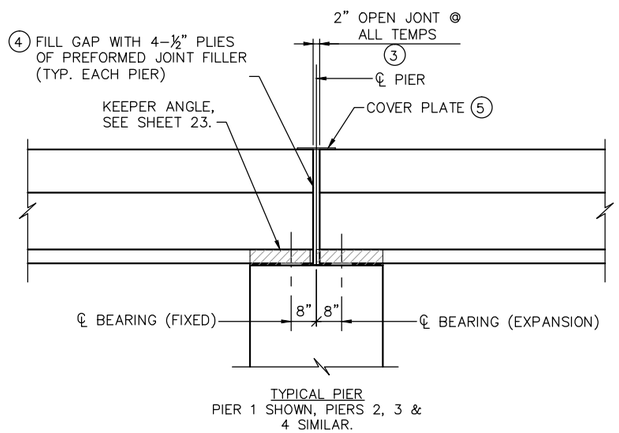

TYPICAL PIER
PIER 1 SHOWN, PIERS 2, 3 & 4 SIMILAR.

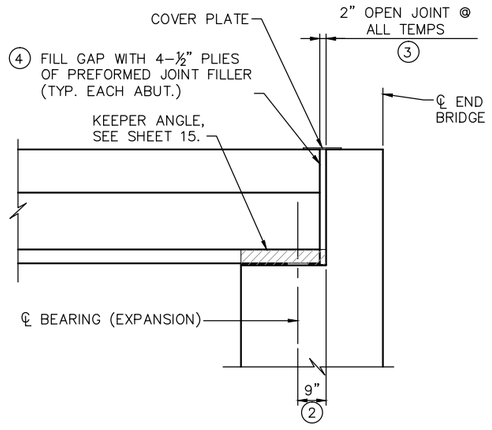

NORTH ABUTMENT

ELEVATION

BEAM TABLE ①		
SPAN	BEAM	LENGTH
1	B1	24'-9 ½"
2	B2	24'-10"
3	B3	33'-10"
4	B2	24'-10"
5	B1	24'-9 ½"

NOTES:

ALL BEAMS SET PARALLEL TO ℄ FREIGHT-KENILWORTH.

ALL DIMENSIONS SHOWN ARE MEASURED ON A HORIZONTAL PLANE.

"X" INDICATES END OF BEAM

① SEE BEAM SHEET FOR DETAILS.

② ALONG ℄ OF BEAM.

③ PERPENDICULAR TO ABUTMENT.

④ PREFORMED JOINT FILLER SHALL BE PER MnDOT SPEC. 3702. COLOR TO MATCH CONCRETE. RECESS JOINT FILLER 1" FROM ALL CONCRETE EDGES.

⑤ SEE SHEET 34 FOR COVER PLATE DETAILS.

NO.	DATE	BY	CHECK	DESIGN	REVISION / SUBMITTAL

DESIGNED BY: NRW | CHECKED BY: JSM
DRAWN BY: PGR | CHECKED BY: NRW

AECOM Kimley»Horn

90% SUBMISSION - 01/22/16

METROPOLITAN COUNCIL

SOUTHWEST Green Line LRT Extension

CIVIL - VOLUME 4F
CEDAR LAKE CHANNEL FREIGHT BRIDGE
BRIDGE R0694
FRAMING PLAN

DISCIPLINE: STRUCTURES
SHEET NAME: CBRR0694-BRG-SUP-001

SHEET 29 OF 50

Jan, 16 2016 09:36 am V:\3400_ADC\CAD\SEGMENT E3\PLAN SHEETS\STRUCTURES\R0694 CLCH-FRT\CBRR0694-BRG-SUP.dwg By: Nick.Williamson

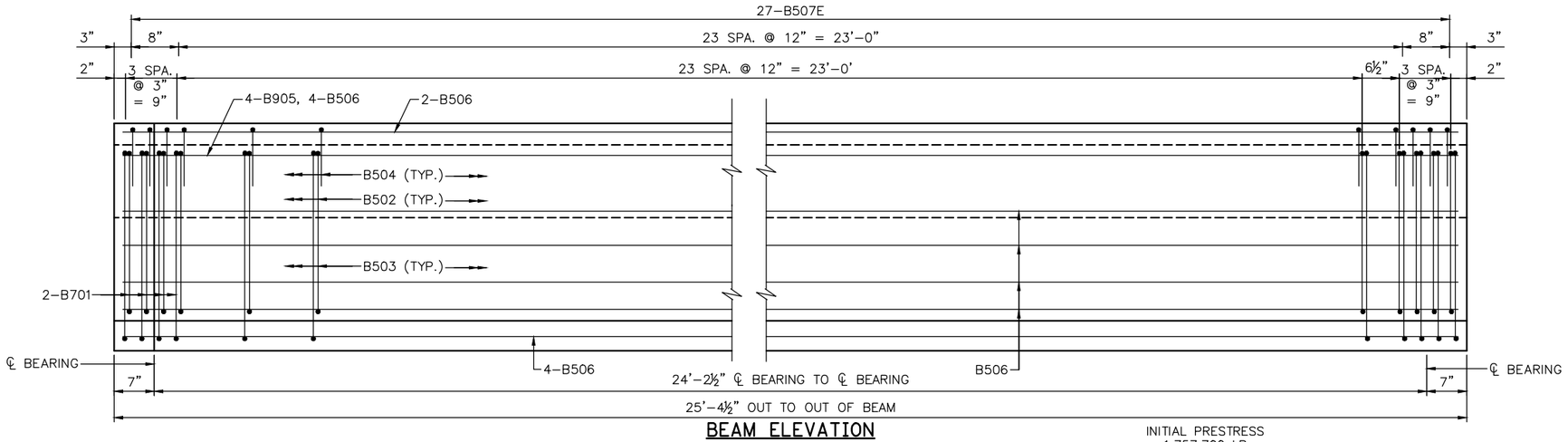

BEAM ELEVATION

INITIAL PRESTRESS
1,757,700 LB

Y DISTANCES (INCHES)			
	NO.	℄ SPAN	END
STRAIGHT STRANDS	40	9.1	
DRAPED STRANDS			
TOTAL STRANDS	40	9.1	

Y = DISTANCE TO CENTER OF GRAVITY OF STRANDS FROM BOTTOM OF BEAM. ALL STRANDS SPACED AS SHOWN.

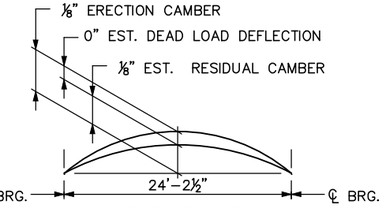

CAMBER DIAGRAM

DEAD LOAD DEFLECTION SHOWN IS FOR WEIGHT OF BALLAST, TIES, WALLS, AND FENCES.

CONTRACTOR WILL TAKE ELEVATIONS AT TOP OF BEAMS AFTER ERECTION. PROVIDE COPY OF ELEVATIONS TO THE ENGINEER.

MINIMUM CONCRETE STRENGTH – K.S.I.	
① f'ci	② f'c
5.0 KSI	6.0 KSI

CALCULATED PRESTRESS LOSSES	
ELASTIC SHORTENING LOSS	4.7 KSI
LONG TERM LOSSES	18.6 KSI
TOTAL LOSSES	23.3 KSI

PRESTRESSING STRAND DIAMETER	
④	½" ☐
④	0.60" ☒

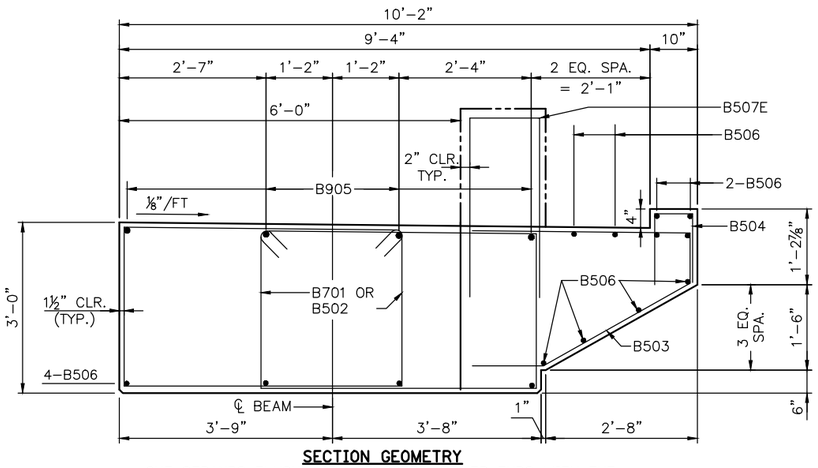

SECTION GEOMETRY

CUT STRANDS FLUSH WITH CONCRETE. COVER ENDS WITH ONE COMPONENT POLYURETHANE SEALANT PER APPROVED PRODUCT LIST.

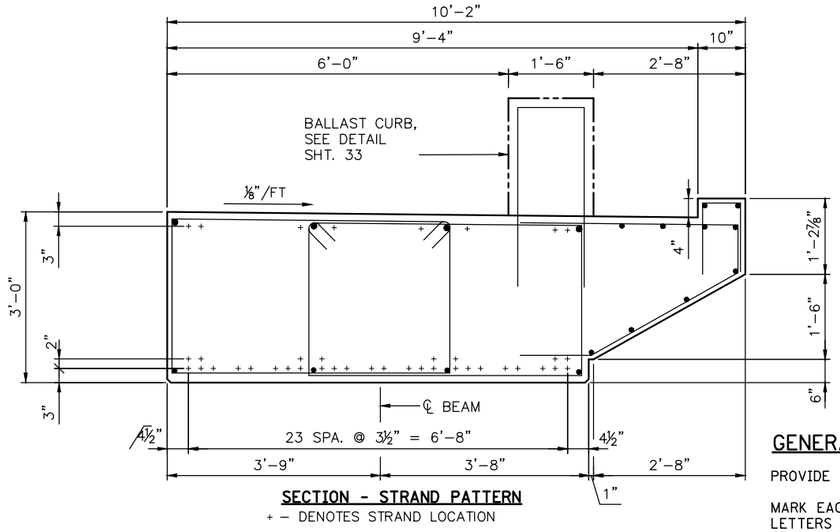

SECTION - STRAND PATTERN

+ – DENOTES STRAND LOCATION

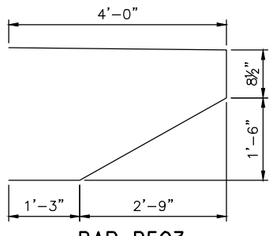

BAR B503

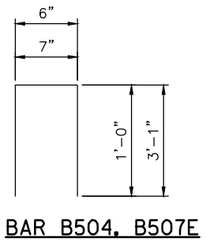

BAR B504, B507E

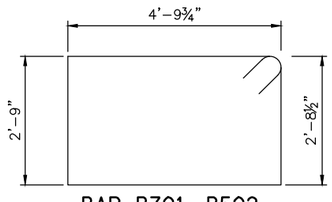

BAR B701, B502

BILL OF REINFORCEMENT FOR BEAMS B1				
BAR	NO.	LENGTH	SHAPE	LOCATION
B701	16	16'-7"	BENT	VERTICAL TIE
B502	23	16'-0"	BENT	VERTICAL TIE
B503	23	9'-1"	BENT	VERTICAL TIE
B504	23	2'-7"	BENT	VERTICAL TIE
B905	4	25'-7"	STR.	LONGITUDINAL
B506	12	25'-7"	STR.	LONGITUDINAL
B507	27	6'-8"	STR.	VERTICAL TIE

GENERAL NOTES

PROVIDE HANDLING HOOKS OR DEVICES AS REQUIRED BY CONTRACTOR.

MARK EACH BEAM SHOWING BRIDGE NUMBER, CASTING DATE, AND INDIVIDUAL IDENTIFICATION LETTERS AND NUMBERS ON THE FACE OF THE BEAM, NEAR THE END, SO LOCATED THAT THEY WILL BE EXPOSED AFTER CONSTRUCTION IS COMPLETE. ENSURE ALL MARKINGS ARE STENCILED AND CLEARLY LEGIBLE. FOR LOCATION OF BEAMS, SEE FRAMING PLAN.

SEE FRAMING PLAN FOR BEAM END MARKED "X".

APPROXIMATE WEIGHT OF BEAM IS: = 54.6 TONS

APPLY AN APPROVED SEALER TO THE SIDES OF THE BEAM NEAR EACH END PER THE SPECIAL PROVISIONS.

① MINIMUM CONCRETE STRENGTH AT TIME OF PRESTRESS TRANSFER.

② MINIMUM CONCRETE STRENGTH WHEN BEAM CAN BE TRANSPORTED AND INSTALLED.

③ STRAIGHT STRANDS.

④ USE 7-WIRE LOW RELAXATION PRESTRESSING STRAND, CONFORMING TO ASTM A416, GRADE 270.

BEAM B1

NO.	DATE	BY	CHECK	DESIGN	REVISION / SUBMITTAL

DESIGNED BY: NRW CHECKED BY: JSM
DRAWN BY: PGR CHECKED BY: NRW

AECOM Kimley»Horn

90% SUBMISSION - 01/22/16

METROPOLITAN COUNCIL

SOUTHWEST Green Line LRT Extension

CIVIL - VOLUME 4F
CEDAR LAKE CHANNEL FREIGHT BRIDGE
BRIDGE R0694
PRESTRESSED CONCRETE BEAM DETAILS 1

DISCIPLINE: STRUCTURES
SHEET NAME: CBRR0694-BRG-SUP-002

SHEET 30 OF 50

Jan, 16 2016 09:36 am V:\3400_ADC\CAD\SEGMENT E3\PLAN SHEETS\STRUCTURES\R0694 CLCH-FRT\CBRR0694-BRG-BEAM.dwg By: Nick.Williamson

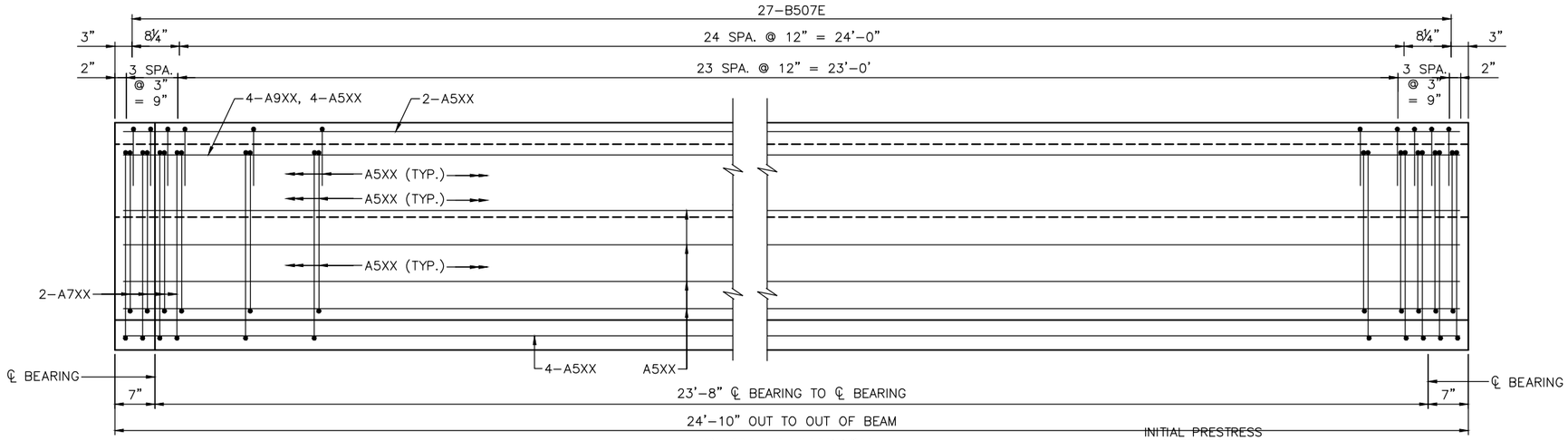

BEAM ELEVATION

INITIAL PRESTRESS
1,757,700 LB

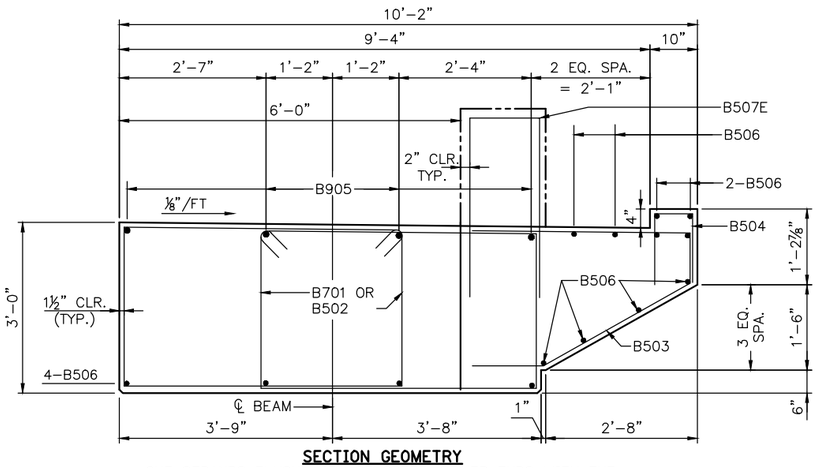

SECTION GEOMETRY

CUT STRANDS FLUSH WITH CONCRETE. COVER ENDS WITH ONE COMPONENT POLYURETHANE SEALANT PER APPROVED PRODUCT LIST.

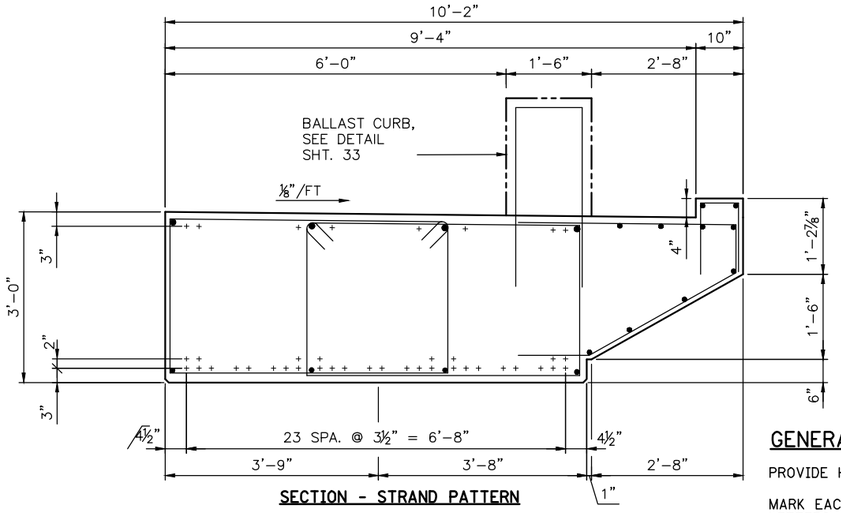

SECTION - STRAND PATTERN

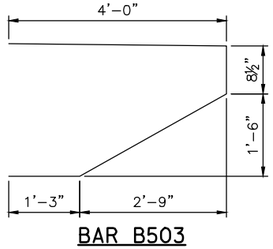

BAR B503

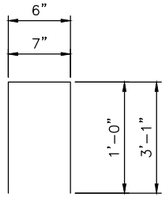

BAR B504, B507E

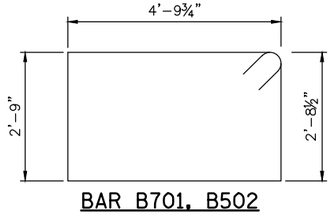

BAR B701, B502

BILL OF REINFORCEMENT FOR BEAMS B2				
BAR	NO.	LENGTH	SHAPE	LOCATION
B701	16	16'-7"	BENT	VERTICAL TIE
B502	22	16'-0"	BENT	VERTICAL TIE
B503	22	9'-1"	BENT	VERTICAL TIE
B504	22	2'-7"	BENT	VERTICAL TIE
B905	4	24'-7"	STR.	LONGITUDINAL
B506	12	24'-7"	STR.	LONGITUDINAL
B507E	27	6'-8"	STR.	VERTICAL TIE

Y DISTANCES (INCHES)			
	NO.	℄ SPAN	END
STRAIGHT STRANDS	40	9.1	
DRAPED STRANDS			
TOTAL STRANDS	40	9.1	

Y = DISTANCE TO CENTER OF GRAVITY OF STRANDS FROM BOTTOM OF BEAM. ALL STRANDS SPACED AS SHOWN.

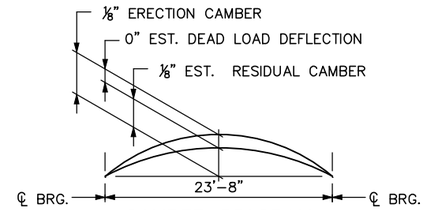

CAMBER DIAGRAM

DEAD LOAD DEFLECTION SHOWN IS FOR WEIGHT OF BALLAST, TIES, WALLS, AND FENCES.

CONTRACTOR WILL TAKE ELEVATIONS AT TOP OF BEAMS AFTER ERECTION. PROVIDE COPY OF ELEVATIONS TO THE ENGINEER.

MINIMUM CONCRETE STRENGTH – K.S.I.	
① f'ci	② f'c
5.0 KSI	6.0 KSI

CALCULATED PRESTRESS LOSSES	
ELASTIC SHORTENING LOSS	4.7 KSI
LONG TERM LOSSES	18.6 KSI
TOTAL LOSSES	23.3 KSI

PRESTRESSING STRAND DIAMETER	
④	½" ☐
④	0.60" ☒

GENERAL NOTES

PROVIDE HANDLING HOOKS OR DEVICES AS REQUIRED BY CONTRACTOR.

MARK EACH BEAM SHOWING BRIDGE NUMBER, CASTING DATE, AND INDIVIDUAL IDENTIFICATION LETTERS AND NUMBERS ON THE FACE OF THE BEAM, NEAR THE END, SO LOCATED THAT THEY WILL BE EXPOSED AFTER CONSTRUCTION IS COMPLETE. ENSURE ALL MARKINGS ARE STENCILED AND CLEARLY LEGIBLE. FOR LOCATION OF BEAMS, SEE FRAMING PLAN.

SEE FRAMING PLAN FOR BEAM END MARKED "X".

APPROXIMATE WEIGHT OF BEAM IS: = 53.4 TONS

APPLY AN APPROVED SEALER TO THE SIDES OF THE BEAM NEAR EACH END PER THE SPECIAL PROVISIONS.

① MINIMUM CONCRETE STRENGTH AT TIME OF PRESTRESS TRANSFER.

② MINIMUM CONCRETE STRENGTH WHEN BEAM CAN BE TRANSPORTED AND INSTALLED.

③ STRAIGHT STRANDS.

④ USE 7-WIRE LOW RELAXATION PRESTRESSING STRAND, CONFORMING TO ASTM A416, GRADE 270.

BEAM B2

NO.	DATE	BY	CHECK	DESIGN	REVISION / SUBMITTAL

DESIGNED BY: NRW CHECKED BY: JSM
DRAWN BY: PGR CHECKED BY: JSM

AECOM Kimley»Horn

90% SUBMISSION - 01/22/16

METROPOLITAN COUNCIL

SOUTHWEST Green Line LRT Extension

CIVIL - VOLUME 4F
CEDAR LAKE CHANNEL FREIGHT BRIDGE
BRIDGE R0694
PRESTRESSED CONCRETE BEAM DETAILS 2

DISCIPLINE: STRUCTURES
SHEET NAME: CBRR0694-BRG-SUP-003

SHEET 31 OF 50

Jan, 16 2016 09:36 am V:\3400_ADC\CAD\SEGMENT E3\PLAN SHEETS\STRUCTURES\R0694 CLCH-FRT\CBRR0694-BRG-BEAM.dwg By: Nick.Williamson

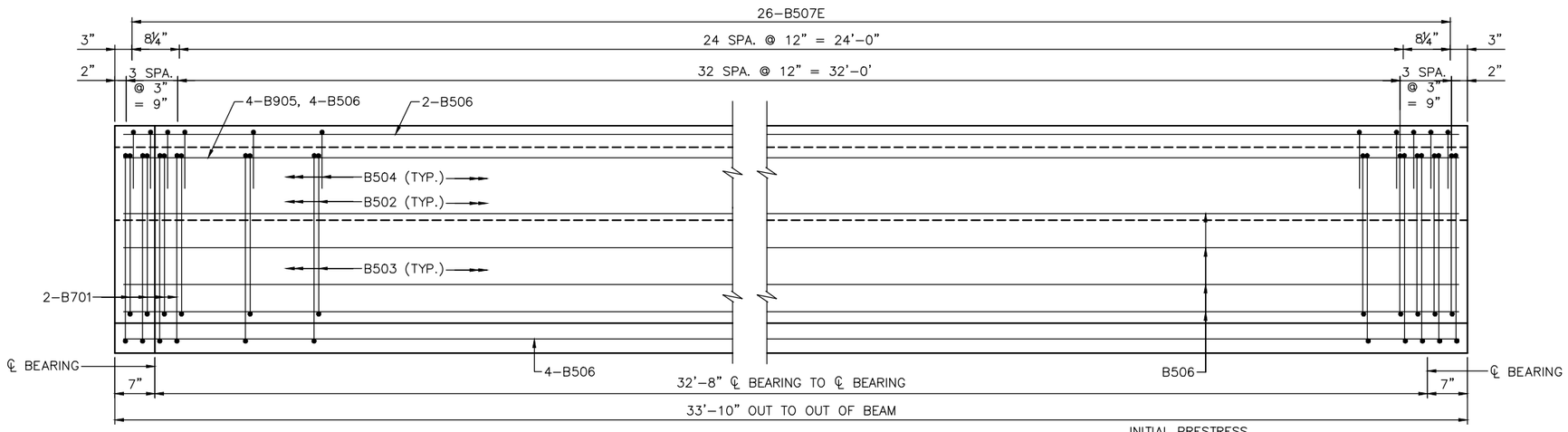

BEAM ELEVATION

INITIAL PRESTRESS
3,163,900 LB

Y DISTANCES (INCHES)			
	NO.	℄ SPAN	END
STRAIGHT STRANDS	72	9.3	
DRAPED STRANDS			
TOTAL STRANDS	72	9.3	

Y = DISTANCE TO CENTER OF GRAVITY OF STRANDS FROM BOTTOM OF BEAM. ALL STRANDS SPACED AS SHOWN.

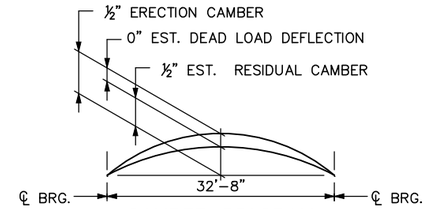

CAMBER DIAGRAM

DEAD LOAD DEFLECTION SHOWN IS FOR WEIGHT OF BALLAST, TIES, WALLS, AND FENCES.

CONTRACTOR WILL TAKE ELEVATIONS AT TOP OF BEAMS AFTER ERECTION. PROVIDE COPY OF ELEVATIONS TO THE ENGINEER.

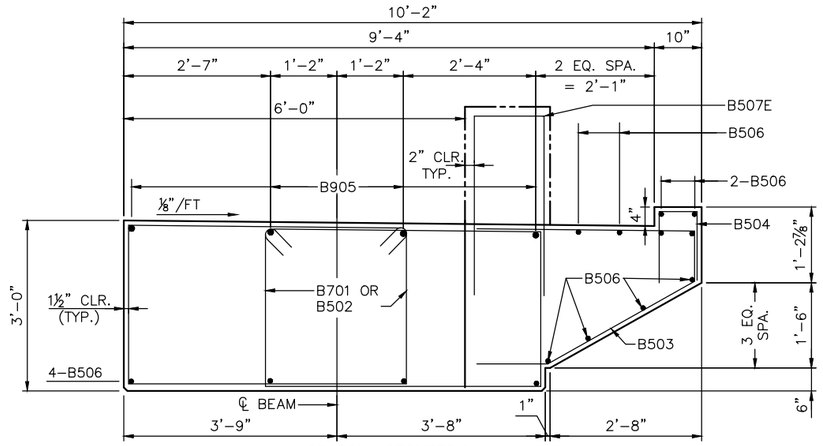

SECTION GEOMETRY

CUT STRANDS FLUSH WITH CONCRETE. COVER ENDS WITH ONE COMPONENT POLYURETHANE SEALANT PER APPROVED PRODUCT LIST.

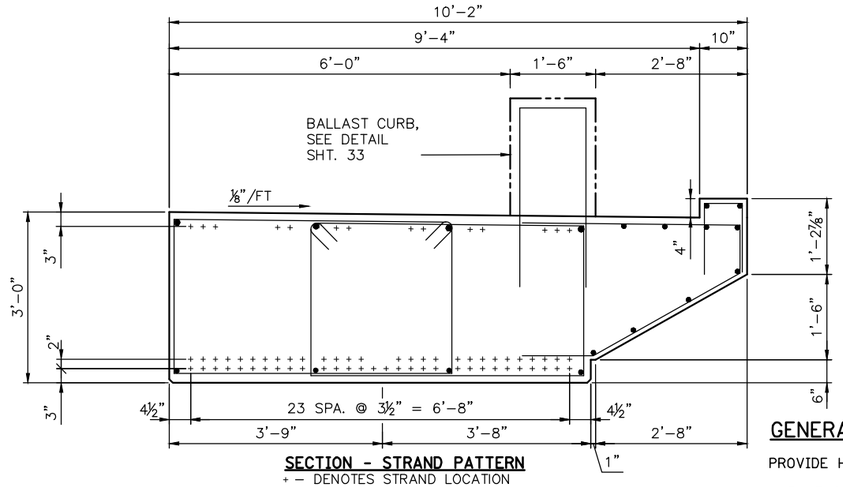

SECTION - STRAND PATTERN

+ – DENOTES STRAND LOCATION

MINIMUM CONCRETE STRENGTH – K.S.I.	
① f'cI	② f'c
5.0 KSI	6.0 KSI

CALCULATED PRESTRESS LOSSES	
ELASTIC SHORTENING LOSS	8.2 KSI
LONG TERM LOSSES	24.6 KSI
TOTAL LOSSES	32.8 KSI

PRESTRESSING STRAND DIAMETER	
④	½" ☐
④	0.60" ☒

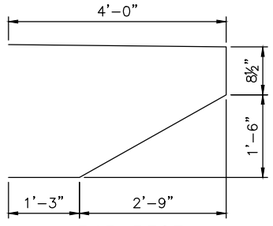

BAR B503

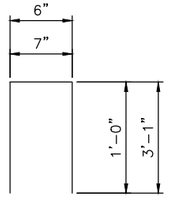

BAR B504, B507E

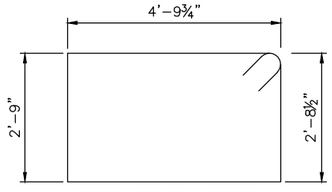

BAR B701, B502

BILL OF REINFORCEMENT FOR BEAMS B3				
BAR	NO.	LENGTH	SHAPE	LOCATION
B701	16	16'-7"	BENT	VERTICAL TIE
B502	31	16'-0"	BENT	VERTICAL TIE
B503	31	9'-1"	BENT	VERTICAL TIE
B504	31	2'-7"	BENT	VERTICAL TIE
B905	4	33'-7"	STR.	LONGITUDINAL
B506	12	33'-7"	STR.	LONGITUDINAL
B507E	33	6'-8"	STR.	VERTICAL TIE

GENERAL NOTES

PROVIDE HANDLING HOOKS OR DEVICES AS REQUIRED BY CONTRACTOR.

MARK EACH BEAM SHOWING BRIDGE NUMBER, CASTING DATE, AND INDIVIDUAL IDENTIFICATION LETTERS AND NUMBERS ON THE FACE OF THE BEAM, NEAR THE END, SO LOCATED THAT THEY WILL BE EXPOSED AFTER CONSTRUCTION IS COMPLETE. ENSURE ALL MARKINGS ARE STENCILED AND CLEARLY LEGIBLE. FOR LOCATION OF BEAMS, SEE FRAMING PLAN.

SEE FRAMING PLAN FOR BEAM END MARKED "X".

APPROXIMATE WEIGHT OF BEAM IS: = 72.7 TONS

APPLY AN APPROVED SEALER TO THE SIDES OF THE BEAM NEAR EACH END PER THE SPECIAL PROVISIONS.

① MINIMUM CONCRETE STRENGTH AT TIME OF PRESTRESS TRANSFER.

② MINIMUM CONCRETE STRENGTH WHEN BEAM CAN BE TRANSPORTED AND INSTALLED.

③ STRAIGHT STRANDS.

④ USE 7-WIRE LOW RELAXATION PRESTRESSING STRAND, CONFORMING TO ASTM A416, GRADE 270.

BEAM B3

NO.	DATE	BY	CHECK	DESIGN	REVISION / SUBMITTAL

DESIGNED BY: NRW CHECKED BY: JSM
DRAWN BY: PGR CHECKED BY: JSM

AECOM Kimley»Horn

90% SUBMISSION - 01/22/16

METROPOLITAN COUNCIL

SOUTHWEST Green Line LRT Extension

CIVIL - VOLUME 4F
CEDAR LAKE CHANNEL FREIGHT BRIDGE
BRIDGE R0694
PRESTRESSED CONCRETE BEAM DETAILS 3

DISCIPLINE: STRUCTURES
SHEET NAME: CBRR0694-BRG-SUP-004

SHEET 32 OF 50

Jan. 16 2016 09:37 am V:\3400_ADC\CAD\SEGMENT E3\PLAN SHEETS\STRUCTURES\R0694 CLCH-FRT\CBRR0694-BRG-BEAM.dwg By: Nick.Williamson

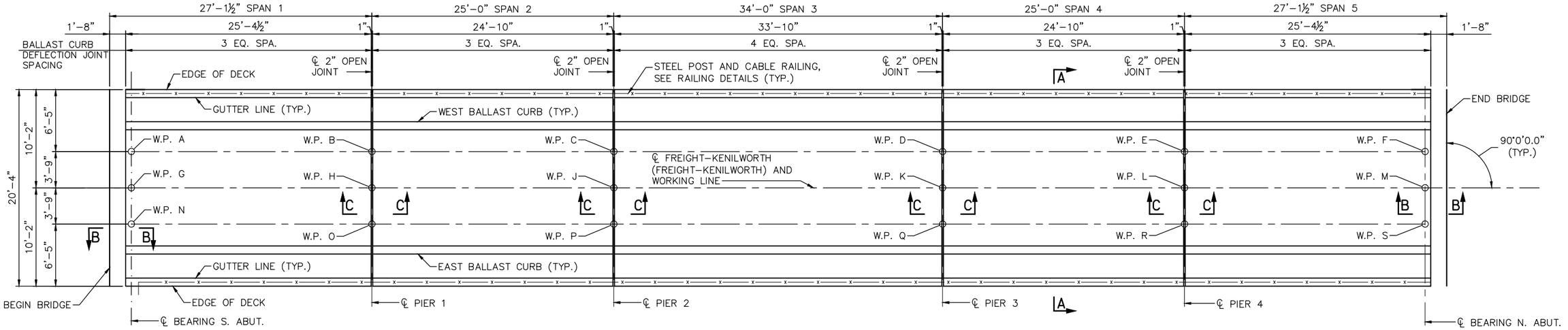

PLAN

BILL OF REINFORCEMENT FOR SUPERSTRUCTURE				
BAR	NO.	LENGTH	SHAPE	LOCATION
S501E	120	8'-1"	STR.	BALLAST CURB
S502E	72	7'-11"	STR.	BALLAST CURB

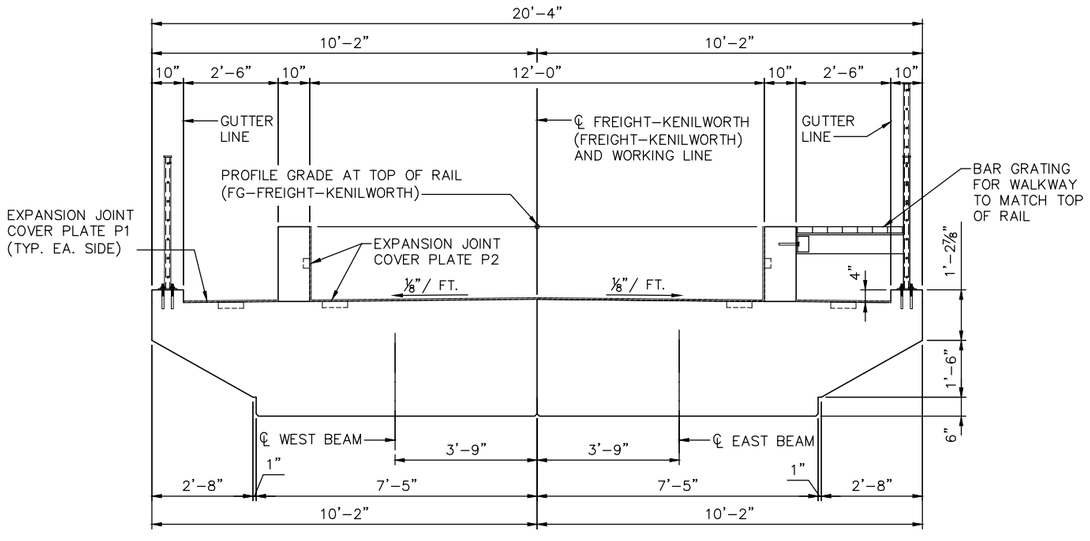

SECTION A–A

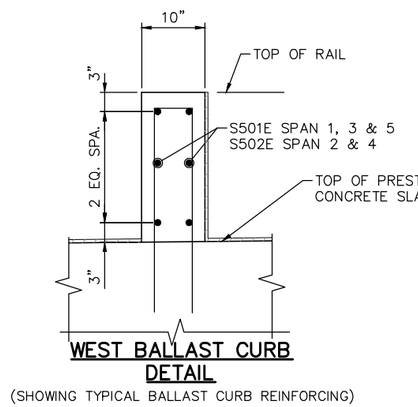

WEST BALLAST CURB DETAIL

(SHOWING TYPICAL BALLAST CURB REINFORCING)

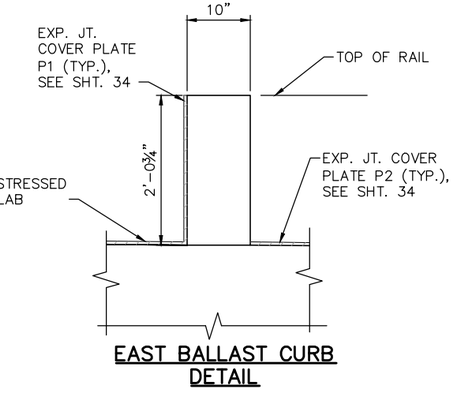

EAST BALLAST CURB DETAIL

NOTES:

FOR SECTION B–B AND C–C SEE NEXT SHEET.

NO.	DATE	BY	CHECK	DESIGN	REVISION / SUBMITTAL

DESIGNED BY: NRW CHECKED BY: JSM
DRAWN BY: PGR CHECKED BY: NRW

AECOM Kimley»Horn

90% SUBMISSION - 01/22/16

METROPOLITAN COUNCIL

SOUTHWEST Green Line LRT Extension

CIVIL - VOLUME 4F
CEDAR LAKE CHANNEL FREIGHT BRIDGE
BRIDGE R0694
SUPERSTRUCTURE DETAILS 1

DISCIPLINE: STRUCTURES

SHEET NAME: CBRR0694-BRG-SUP-005

SHEET 33 OF 50

Jan, 16 2016 09:37 am V:\3400_ADC\CAD\SEGMENT E3\PLAN SHEETS\STRUCTURES\R0694 CLCH-FRT\CBRR0694-BRG-SUP.dwg By: Nick.Williamson

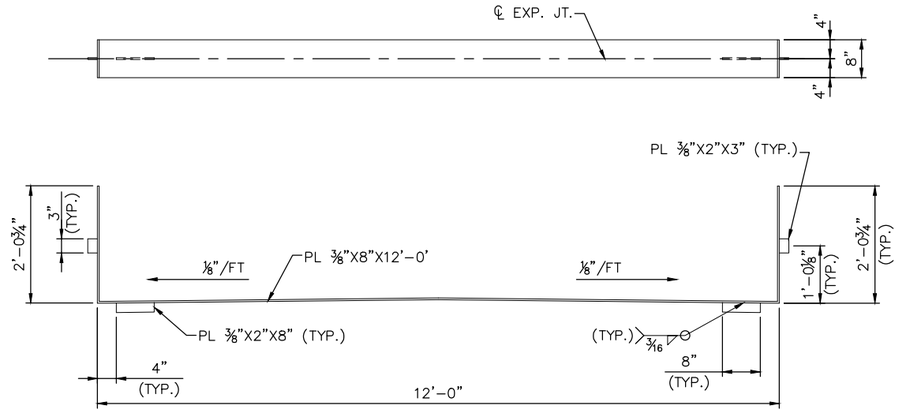

EXPANSION JOINT COVER PLATE P2

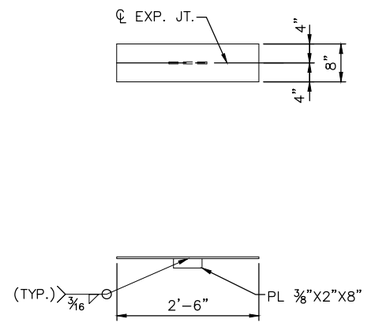

EXPANSION JOINT COVER PLATE P1

NOTES:

GALVANIZE STRUCTURAL STEEL AFTER FABRICATION PER MnDOT SPEC. 3394.

GALVANIZE FASTENERS PER MnDOT SPEC. 3392.

STRUCTURAL STEEL SHALL COMPLY WITH MnDOT SPEC 3306.

PREFORMED JOINT FILLER SHALL BE PER MnDOT SPEC. 3702. COLOR TO MATCH CONCRETE. RECESS JOINT FILLER 1" FROM ALL CONCRETE EDGES.

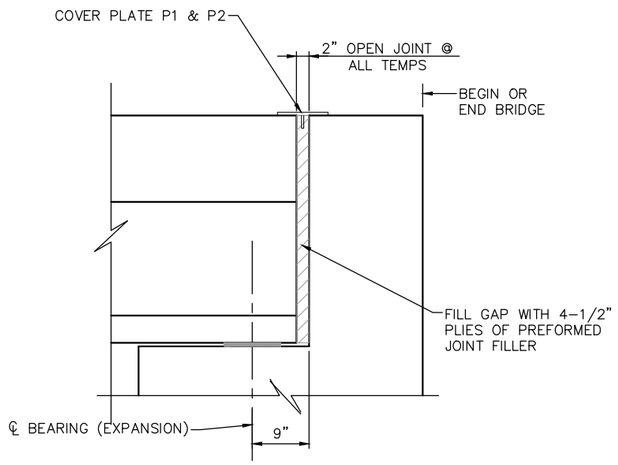

SECTION B–B

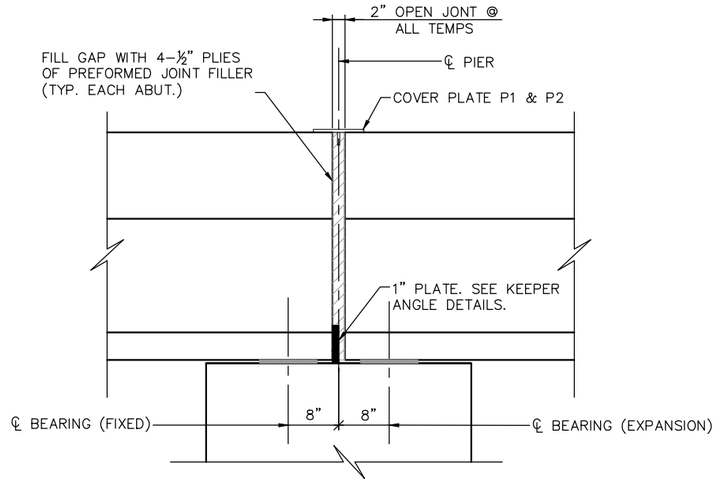

SECTION C–C

NO.	DATE	BY	CHECK	DESIGN	REVISION / SUBMITTAL

DESIGNED BY: NRW | CHECKED BY: JSM
DRAWN BY: PGR | CHECKED BY: NRW

AECOM Kimley»Horn

90% SUBMISSION - 01/22/16

METROPOLITAN COUNCIL

SOUTHWEST Green Line LRT Extension

CIVIL - VOLUME 4F
CEDAR LAKE CHANNEL FREIGHT BRIDGE
BRIDGE R0694
SUPERSTRUCTURE DETAILS 2

DISCIPLINE: STRUCTURES
SHEET NAME: CBRR0694-BRG-SUP-006

SHEET 34 OF 50

Jan, 16 2016 09:38 am V:\3400_ADC\CAD\SEGMENT E3\PLAN SHEETS\STRUCTURES\R0694 CLCH-FRT\CBRR0694-BRG-SUP.dwg By: Nick.Williamson

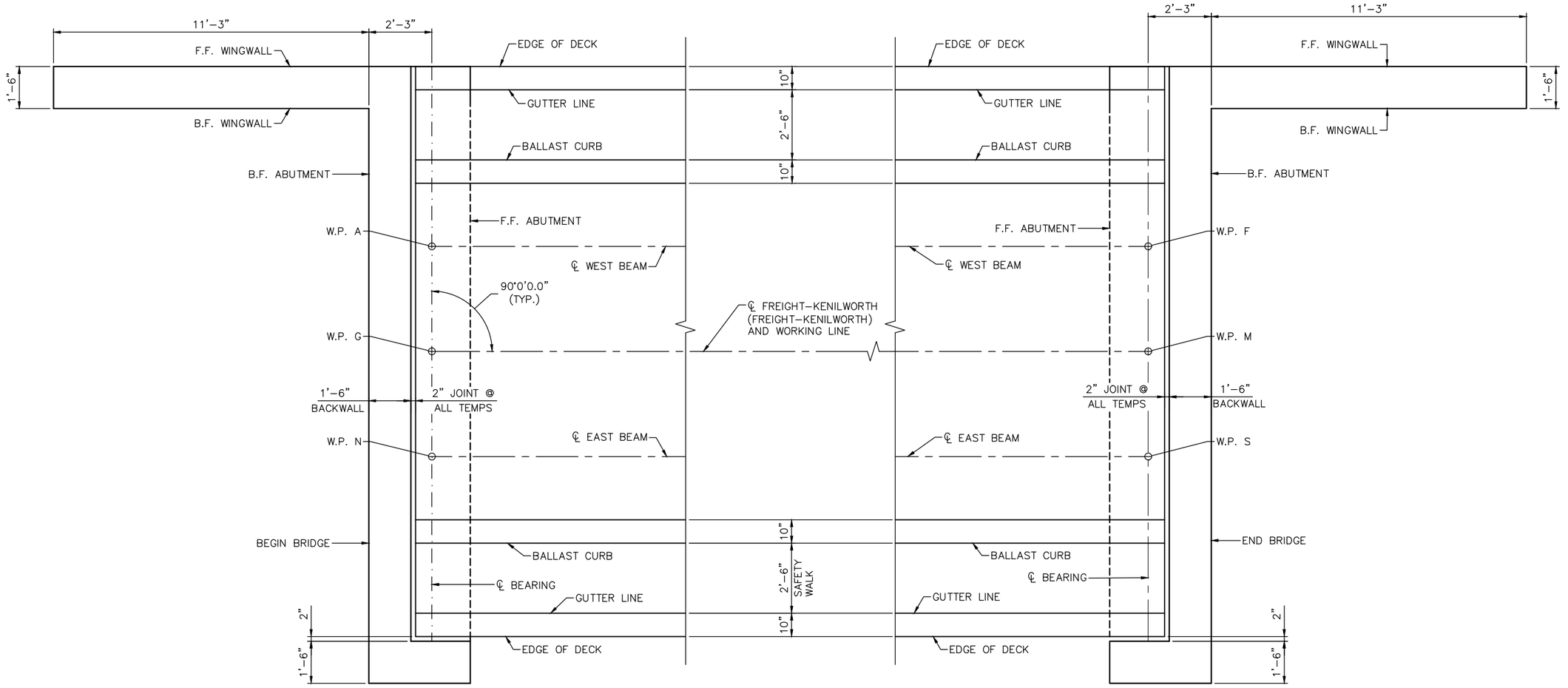

SOUTH ABUTMENT CORNER DETAIL

NORTH ABUTMENT CORNER DETAIL

NOTES:

F.F. – DENOTES FRONT FACE

B.F. – DENOTES BACK FACE

NO.	DATE	BY	CHECK	DESIGN	REVISION / SUBMITTAL

DESIGNED BY: NRW | CHECKED BY: JSM
DRAWN BY: PGR | CHECKED BY: NRW

AECOM Kimley»Horn

90% SUBMISSION - 01/22/16

METROPOLITAN COUNCIL

SOUTHWEST Green Line LRT Extension

CIVIL - VOLUME 4F
CEDAR LAKE CHANNEL FREIGHT BRIDGE
BRIDGE R0694
SUPERSTRUCTURE DETAILS 3

DISCIPLINE: STRUCTURES
SHEET NAME: CBRR0694-BRG-SUP-007

SHEET 35 OF 50

Jan, 16 2016 09:38 am V:\3400_ADC\CAD\SEGMENT E3\PLAN SHEETS\STRUCTURES\R0694 CLCH-FRT\CBRR0694-BRG-SUP.dwg By: Nick.Williamson

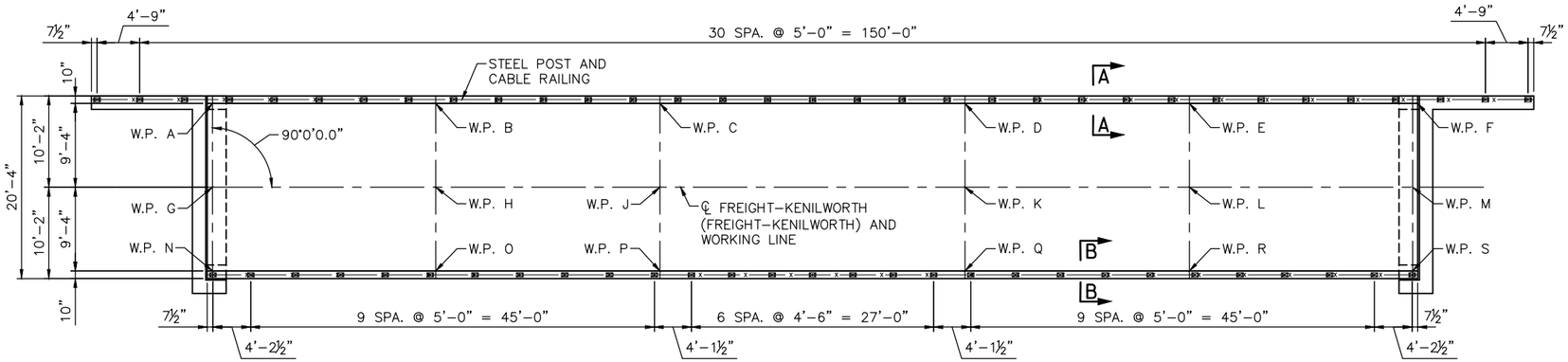

RAIL PLAN

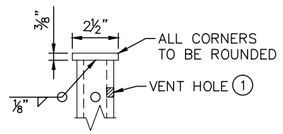

POST CAP DETAIL

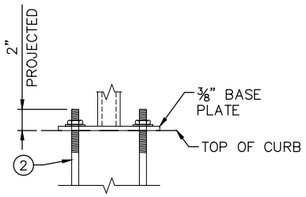

ANCHOR DETAIL

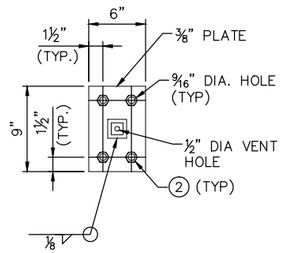

SECTION D–D

NOTES:

USE A500, GRADE B STRUCTURAL STEEL TUBING (HSS) IN THE RAIL CONFORMING TO SPEC. 3361. FINIAL CAPS SHALL BE SPEC. 3322. ALL OTHER STEEL SHALL CONFORM TO SPEC. 3306.

GALVANIZE BOLTS, NUTS, WASHERS, AND ANCHORS PER SPEC. 3392. GALVANIZE ALL OTHER STRUCTURAL STEEL PER SPEC. 3394, AFTER FABRICATION.

COAT THE GALVANIZED RAILING, BASE PLATES, AND PROTRUDING PORTIONS OF BOLTS, NUTS, ANCHORS, AND WASHERS.

INSTALL RAIL POSTS PLUMB.

SEE SPECIAL PROVISIONS FOR REQUIREMENTS NOT INCLUDED ON THIS SHEET.

DRILL ½" DIA. MAX. VENT HOLES ON THE UNDERSIDE OF RAIL TUBES AS NECESSARY TO FACILITATE GALVANIZING.

(1) DRILL VENT HOLE IN THE RAIL POST WITHIN 2" OF THE UNDERSIDE OF THE CAP, ON THE NON–TRAFFIC SIDE OF THE POST AS NECESSARY TO FACILITATE GALVANIZING. MAXIMUM HOLE SIZE IS ½" DIA.

(2) ADHESIVE ANCHORAGE WITH ½" DIA. ANCHOR ROD PER SPEC. 3385. TYPE A WITH HEX NUT AND WASHER. PROVIDE AN ADHESIVE WITH A MINIMUM CHARACTERISTIC BOND STRENGTH IN UNCRACKED CONCRETE OF 1.5 KSI. EMBED THE ANCHORAGE NO LESS THAN 6" REGARDLESS OF CHARACTERISTIC BOND STRENGTH. DRILL THROUGH REINFORCEMENT(IF ENCOUNTERED) TO ACHIEVE MINIMUM EMBEDMENT. ENSURE HEX NUT IS IN CONTACT WITH THE ADJACENT SURFACE AND TORQUE TO 60 FT–LBS UNLESS A HIGHER TORQUE IS RECOMMENDED BY THE MANUFACTURER. PROOF LOAD TO 4.8 KIPS. SEE SPECIAL PROVISIONS FOR ADDITIONAL REQUIREMENTS.

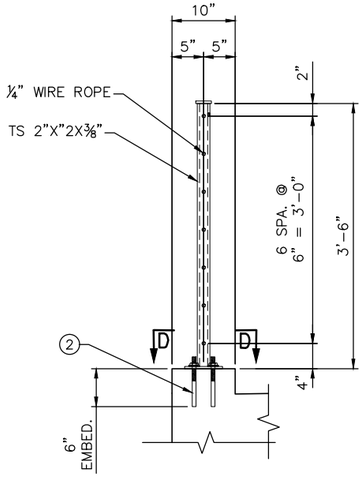

SECTION A–A

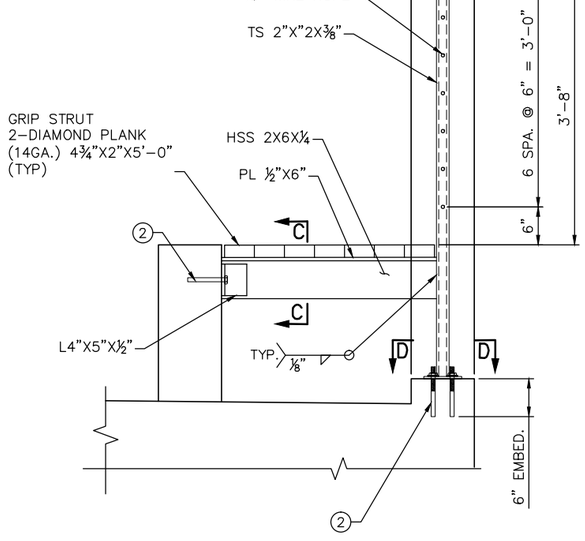

SECTION B–B

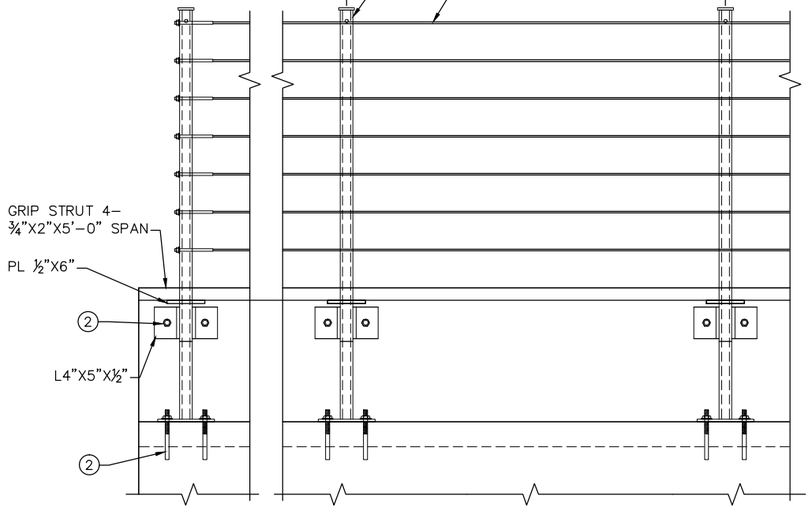

TYPICAL STEEL POST AND RAILING ELEVATION

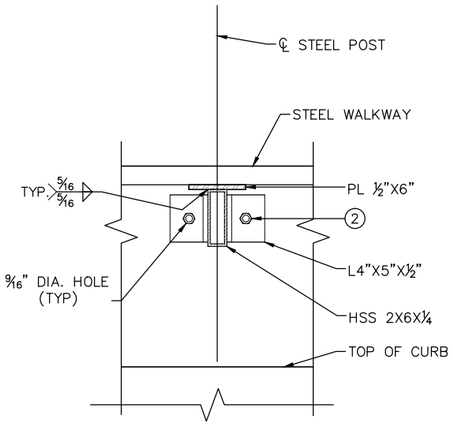

SECTION C–C

NO.	DATE	BY	CHECK	DESIGN	REVISION / SUBMITTAL

DESIGNED BY: NRW CHECKED BY: JSM
DRAWN BY: PGR CHECKED BY: NRW

AECOM Kimley»Horn

90% SUBMISSION - 01/22/16

METROPOLITAN COUNCIL

SOUTHWEST Green Line LRT Extension

CIVIL - VOLUME 4F
CEDAR LAKE CHANNEL FREIGHT BRIDGE
BRIDGE R0694
STEEL POST AND CABLE RAILING

DISCIPLINE: STRUCTURES
SHEET NAME: CBRR0694-BRG-RAL-001

SHEET 36 OF 50

Jan, 16 2016 09:38 am V:\3400_ADC\CAD\SEGMENT E3\PLAN SHEETS\STRUCTURES\R0694 CLCH-FRT\CBRR0694-BRG-RAL.dwg By: Nick.Williamson

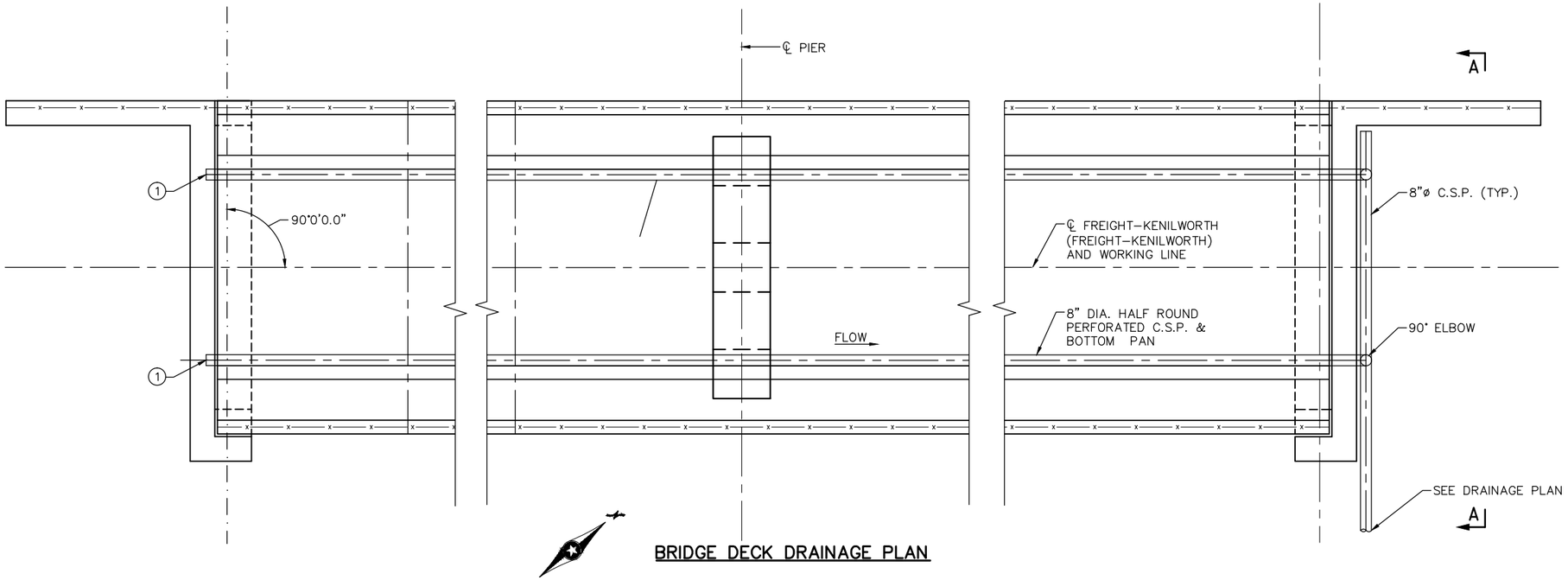

BRIDGE DECK DRAINAGE PLAN

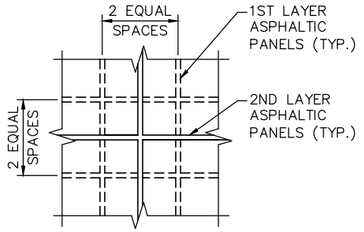

TYPICAL ASPHALT PANEL PLACEMENT

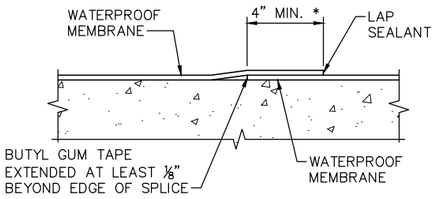

BUTYL RUBBER MEMBRANE OR EPDM WATERPROOFING SPLICE DETAIL

* ALL CONTACT SURFACES TO BE THOROUGHLY CLEANED & CEMENTED

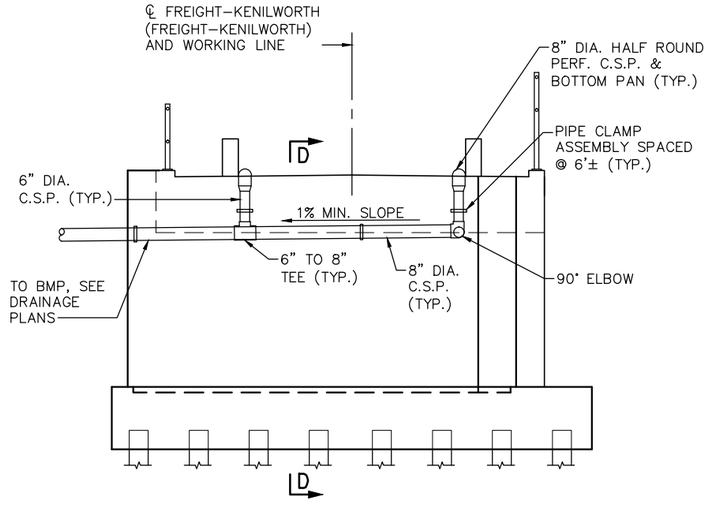

SECTION A–A

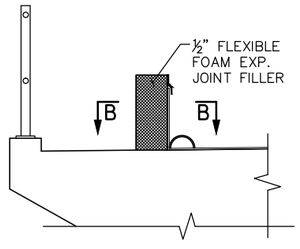

CURB SECTION AT DEFLECTION JOINT

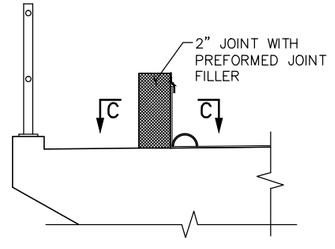

CURB SECTION AT EXPANSION JOINT

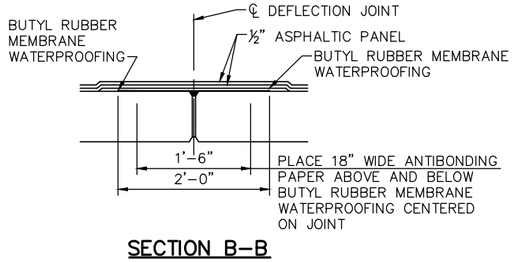

SECTION B–B

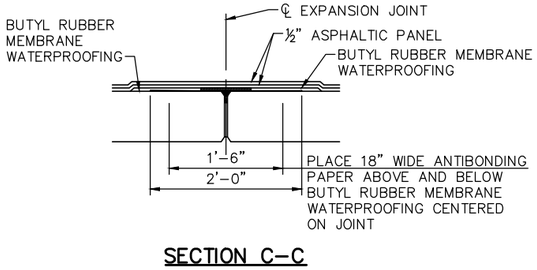

SECTION C–C

NOTES:

FOR SECTION D–D SEE NEXT SHEET.

ALL PIPE SHALL COMPLY WITH SPEC. 3326.

ALL STEEL COMPONENTS OF THE DRAINAGE SYSTEM INCLUDING PIPES, BOTTOM PANS, COVERS, CLAMPS, END PLATES, AND HARDWARE SHALL BE GALVANIZED IN ACCORDANCE WITH SPEC. 3392 AND SPEC. 3394.

PREFORMED JOINT FILLER SHALL BE PER MnDOT SPEC. 3702.

(1) TERMINATE DRAIN AT THE SOUTH ABUTMENT BACKWALL.

NO.	DATE	BY	CHECK	DESIGN	REVISION / SUBMITTAL

DESIGNED BY: NRW | CHECKED BY: JSM
DRAWN BY: PGR | CHECKED BY: NRW

AECOM Kimley»Horn

90% SUBMISSION - 01/22/16

METROPOLITAN COUNCIL

SOUTHWEST Green Line LRT Extension

CIVIL - VOLUME 4F
CEDAR LAKE CHANNEL FREIGHT BRIDGE
BRIDGE R0694
DECK DRAINAGE AND WATERPROOFING 1

DISCIPLINE: STRUCTURES

SHEET NAME: CBRR0694-BRG-DTL-001

SHEET 37 OF 50

Jan, 16 2016 09:39 am V:\3400_ADC\CAD\SEGMENT E3\PLAN SHEETS\STRUCTURES\R0694 CLCH-FRT\CBRR0694-BRG-DTL4.dwg By: Nick.Williamson

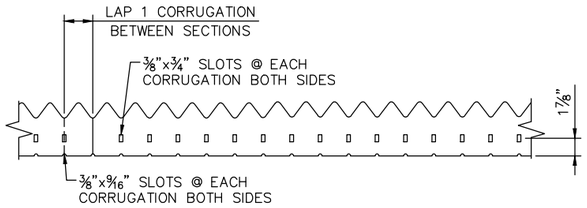

COVER ELEVATION



COVER SECTION

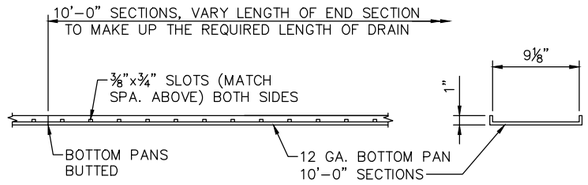

BOTTOM PAN ELEVATION

BOTTOM PAN SECTION

DECK DRAIN DETAILS

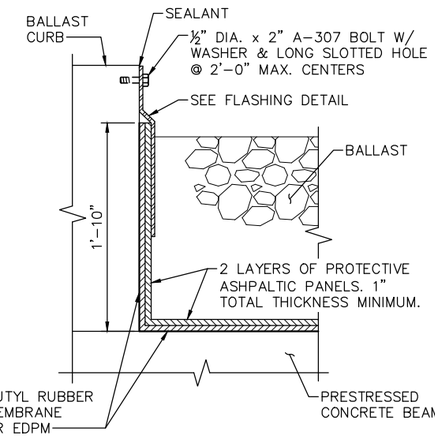

TRANS. SECTION AT CONC. DECK

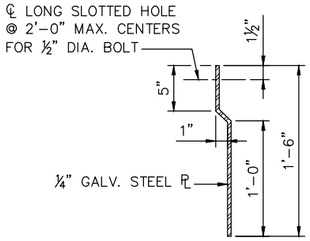

FLASHING DETAIL

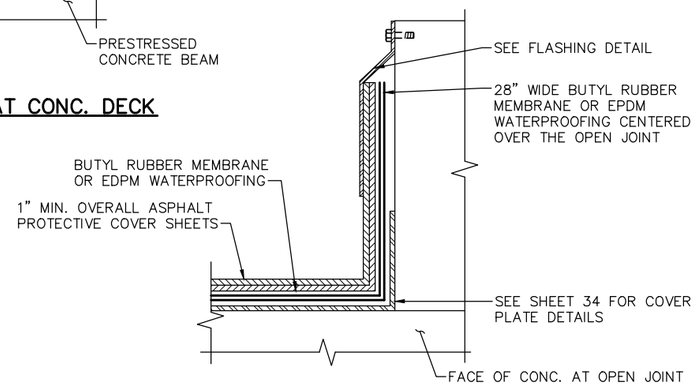

TRANS. SECTION AT OPEN JOINT

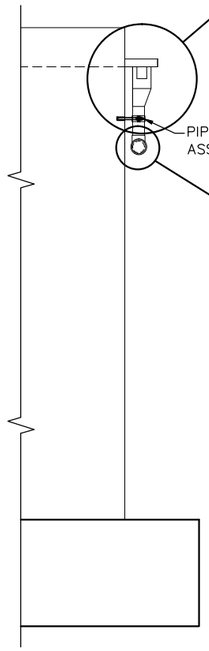

SECTION D–D

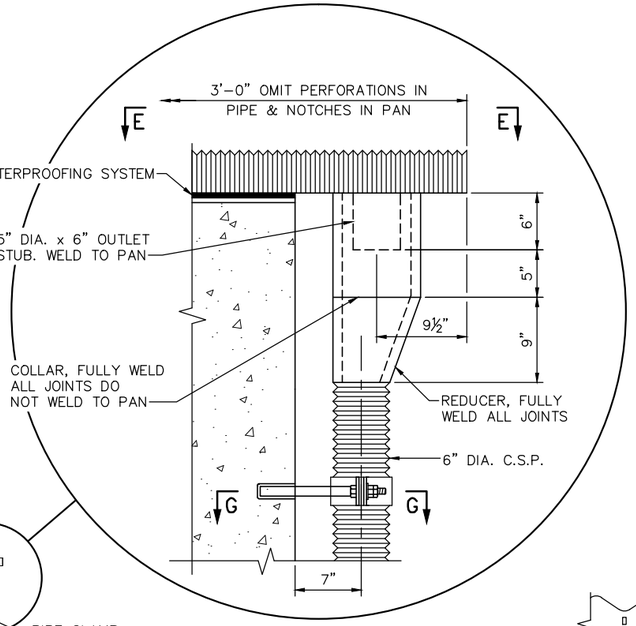

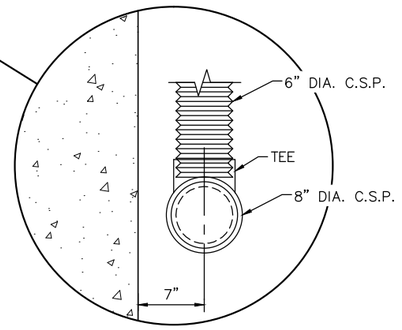

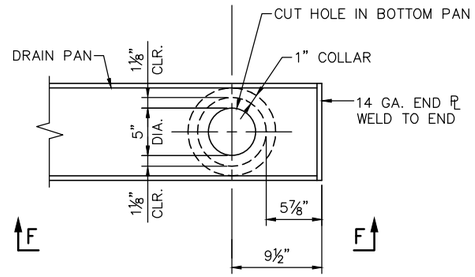

VIEW E–E

(8" DIA. 12 GA. HALF–ROUND
C.S.P. NOT SHOWN)

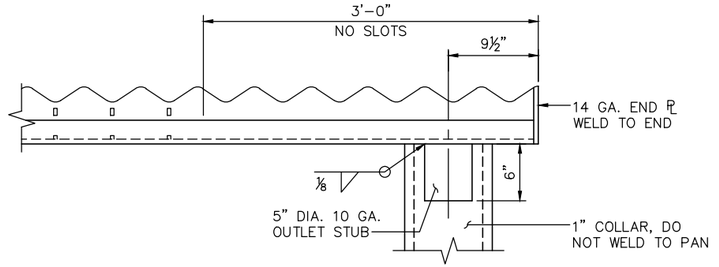

VIEW F–F

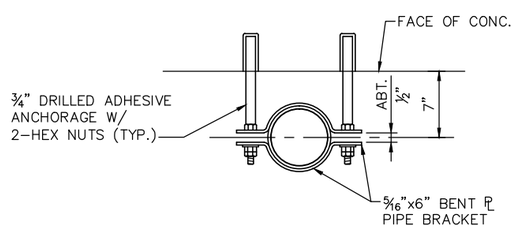

SECTION G–G

(PIPE CLAMP ASSEMBLY)

NO.	DATE	BY	CHECK	DESIGN	REVISION / SUBMITTAL

DESIGNED BY: NRW CHECKED BY: JSM
DRAWN BY: PGR CHECKED BY: NRW

AECOM Kimley»Horn

90% SUBMISSION - 01/22/16

METROPOLITAN COUNCIL

SOUTHWEST Green Line LRT Extension

CIVIL - VOLUME 4F
CEDAR LAKE CHANNEL FREIGHT BRIDGE
BRIDGE R0694
DECK DRAINAGE AND WATERPROOFING 2

DISCIPLINE: STRUCTURES
SHEET NAME: CBRR0694-BRG-DTL-002

SHEET 38 OF 50

Jan, 16 2016 09:39 am V:\3400_ADC\CAD\SEGMENT E3\PLAN SHEETS\STRUCTURES\R0694 CLCH-FRT\CBRR0694-BRG-DTL5.dwg By: Nick.Williamson

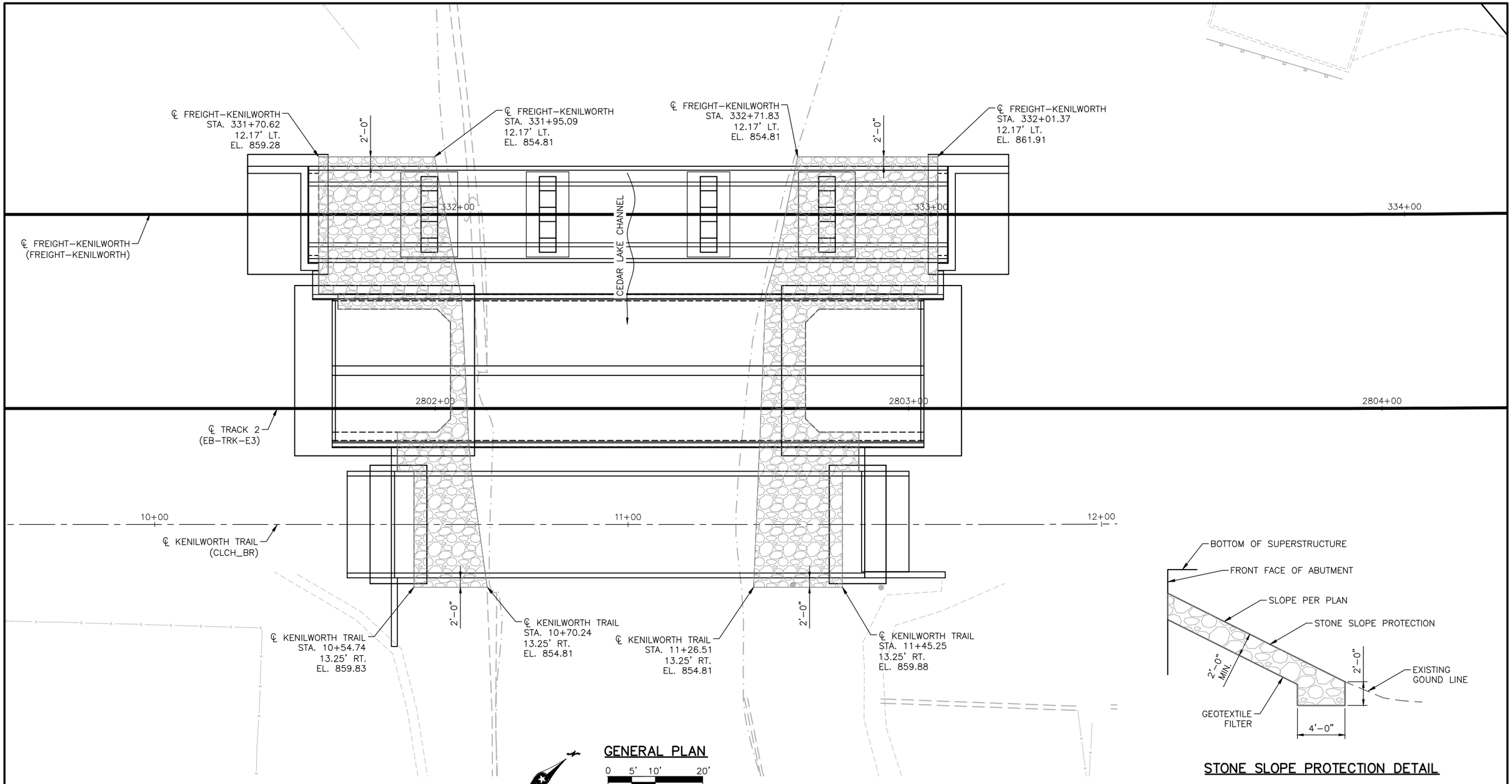

GENERAL PLAN

0 5' 10' 20'

SCALE IN FEET

STONE SLOPE PROTECTION DETAIL

GENERAL NOTES

GEOTEXTILE FILTER PER SPEC. 3733

STONE SLOPE PROTECTION SHALL BE IN ACCORDANCE WITH THE SPECIAL PROVISIONS.

NO.	DATE	BY	CHECK	DESIGN	REVISION / SUBMITTAL

DESIGNED BY: NRW | CHECKED BY: JSM
DRAWN BY: PGR | CHECKED BY: NRW

AECOM Kimley»Horn

90% SUBMISSION - 01/22/16

METROPOLITAN COUNCIL

SOUTHWEST Green Line LRT Extension

CIVIL - VOLUME 4F
CEDAR LAKE CHANNEL FREIGHT BRIDGE
BRIDGE R0694
STONE SLOPE PROTECTION DETAILS

DISCIPLINE: STRUCTURES
SHEET NAME: CBRR0694-BRG-DTL-003

SHEET 39 OF 50

Jan, 16 2016 09:41 am V:\3400_ADC\CAD\SEGMENT E3\PLAN SHEETS\STRUCTURES\R0694 CLCH-FRT\CBRR0694-BRG-SLO.dwg By: Nick.Williamson

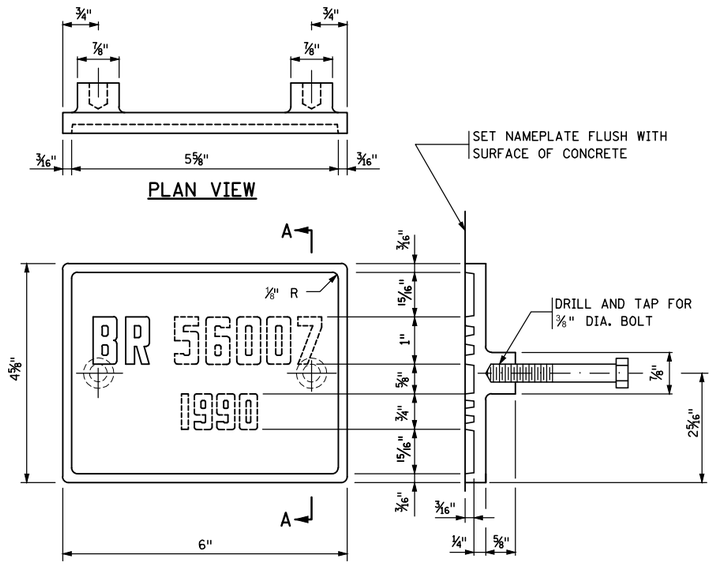

PLAN VIEW

ELEVATION

SECTION A-A

THE DASHED NUMBERS SHOWN ABOVE ARE FOR ILLUSTRATION.
DATA TO BE SHOWN ON NAMEPLATE IS AS FOLLOWS:

BRIDGE R0694

YEAR ①



NUMBERS FOR NAMEPLATE

NOTES:

MATERIAL SHALL COMPLY WITH SPEC. 3327.

LETTERS AND NUMBERS SHALL CONFORM TO THOSE SHOWN.

DRAFT ON LETTERS AND NUMBERS SHALL NOT BE MORE THAN 3" IN 12".

HORIZONTAL SPACING OF LETTERS AND NUMBERS SHALL PRODUCE A BALANCED LAYOUT IN PROPORTION TO SPACING SHOWN.

TOP SURFACE OF LETTERS, NUMBERS AND FRAMES SHALL BE BURNISHED.

FURNISH 2 STEEL BOLTS ⅜" DIA. × 3" LONG WITH EACH PLATE.

ALL DIMENSIONS FOR 1" HIGH LETTERS AND NUMBERS SHALL BE IN DIRECT PROPORTION TO THOSE SHOWN FOR THE 1" HIGH LETTERS AND NUMBERS.

① YEAR OF CONSTRUCTION.

APPROVED: NOVEMBER 22, 2002	STATE OF MINNESOTA DEPARTMENT OF TRANSPORTATION	REVISION 09-11-2014	DETAIL NO.
STATE BRIDGE ENGINEER	BRIDGE NAMEPLATE (FOR NEW BRIDGES)		B101

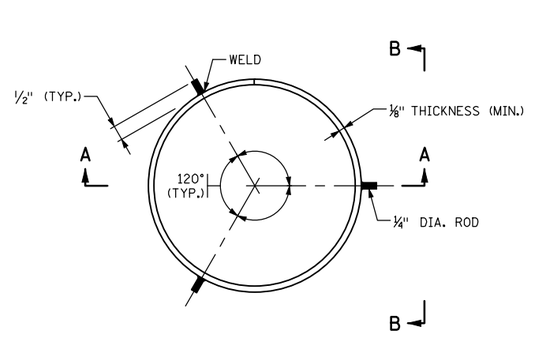

PLAN VIEW - SPLICE BACK-UP RING

PILE NOT SHOWN

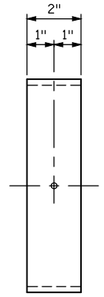

SECTION B-B

PILE NOT SHOWN

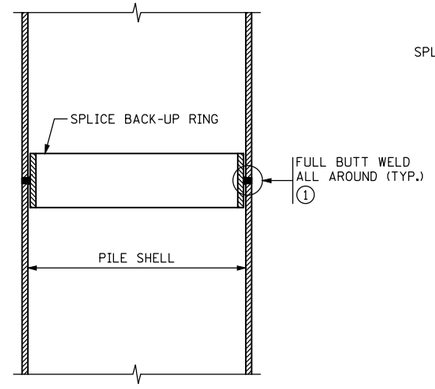

SECTION A-A

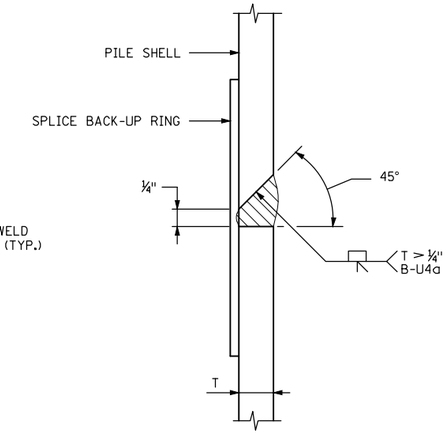

DETAIL "A" ①

NOTES:

APPROVED COMMERCIAL PILE SPLICE BACK-UP RING MAY BE USED IN LIEU OF THE TYPE DETAILED, PROVIDED THAT ." ROOT IS MAINTAINED. BACK-UP RING SHALL HAVE A TIGHT FIT.

WELDING ELECTRODES SHALL BE CELLULOSIC TYPE ELECTRODES E-6010 OR E-6011.

ELECTRODES WHICH HAVE BECOME WET, SOILED OR DAMAGED SHALL NOT BE USED.

WELDING SHALL NOT BE DONE WHEN THE AMBIENT TEMPERATURE IS LOWER THAN 0° F. OR WHEN THE PILE IS WET OR EXPOSED TO FALLING RAIN OR SNOW. WHEN THE PILE METAL TEMPERATURE IS BELOW 32° F., THE PILE METAL IN THE AREA OF THE WELD SHALL BE HEATED TO A MINIMUM TEMPERATURE OF 70° F. AND MAINTAINED AT THIS TEMPERATURE DURING WELDING.

① FOR PILE SHELL THICKNESSES GREATER THAN ¼", USE A B-U4a WELD CONFIGURATION. SEE DETAIL "A".

APPROVED: NOVEMBER 22, 2002	STATE OF MINNESOTA DEPARTMENT OF TRANSPORTATION	REVISION: 11-06-2013	DETAIL NO.
STATE BRIDGE ENGINEER	PILE SPLICE (CAST-IN-PLACE CONCRETE PILES)		B201

NO.	DATE	BY	CHECK	DESIGN	REVISION / SUBMITTAL

DESIGNED BY: NRW CHECKED BY: JSM

DRAWN BY: PGR CHECKED BY: NRW

AECOM Kimley»Horn

90% SUBMISSION - 01/22/16

METROPOLITAN COUNCIL

SOUTHWEST Green Line LRT Extension

CIVIL - VOLUME 4F
CEDAR LAKE CHANNEL FREIGHT BRIDGE
BRIDGE R0694
BRIDGE DETAILS 1

DISCIPLINE: STRUCTURES

SHEET NAME: CBRR0694-BRG-DTL-004

SHEET 40 OF 50

Jan, 16 2016 09:41 am V:\3400_ADC\CAD\SEGMENT E3\PLAN SHEETS\STRUCTURES\R0694 CLCH-FRT\CBRR0694-BRG-DTL2.dwg By: Nick.Williamson

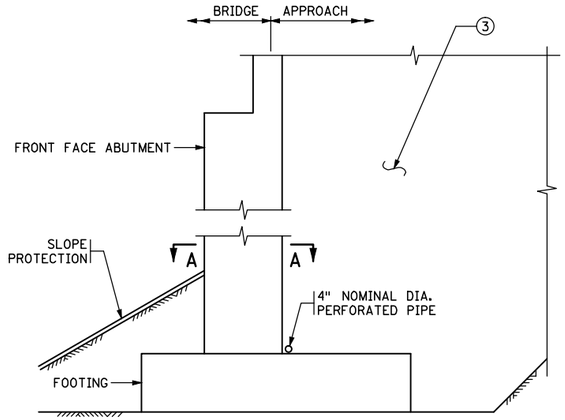

SECTION THROUGH PARAPET AND SEMI-INTEGRAL ABUTMENTS

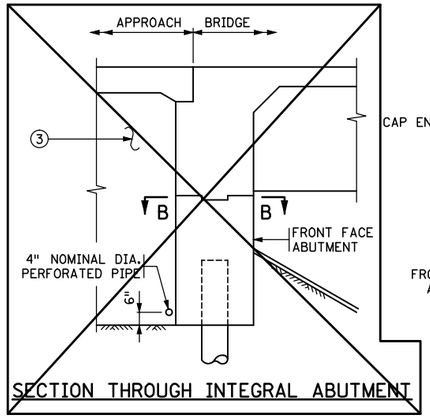

SECTION THROUGH INTEGRAL ABUTMENT

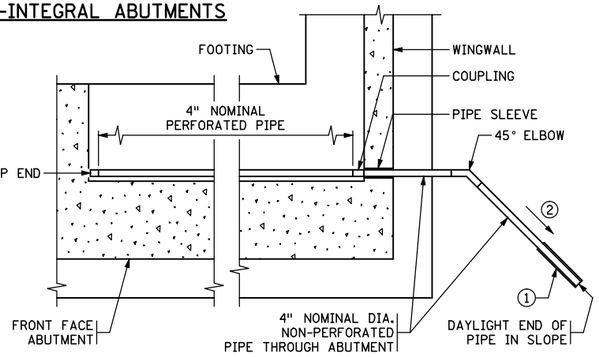

SECTION A-A

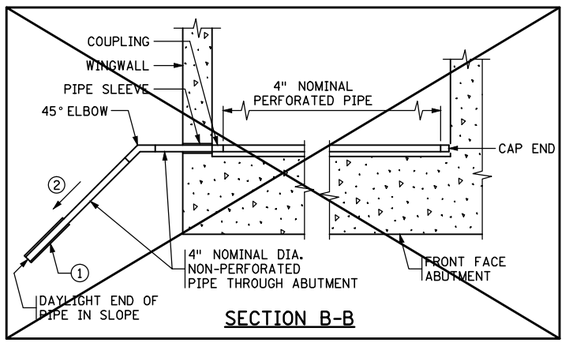

SECTION B-B

NOTES:

~~PAYMENT WILL BE INCLUDED IN THE SINGLE LUMP SUM PRICE FOR "DRAINAGE SYSTEM TYPE (B910)", INCLUDES BUT IS NOT LIMITED TO 4" DIAMETER PERFORATED AND NON PERFORATED PIPE, ELBOWS, END CAPS, COUPLINGS, SLEEVES AND PRECAST CONCRETE HEADWALLS.~~

ALL PIPE TO COMPLY WITH SPEC. 3245.

WRAP PERFORATED PIPE WITH GEOTEXTILE PER SPEC. 3733, TYPE 1. ATTACH TO PIPE PER SPEC. 2502.

1. AT CONTRACTORS OPTION, MAY TIE APPROACH PANEL DRAINAGE SYSTEM AND ABUTMENT DRAINAGE SYSTEM INTO A SINGLE PRECAST CONCRETE HEADWALL OR INTO A CATCH BASIN AS LONG AS A MINIMUM OF 1% POSITIVE SLOPE CAN BE MANTAINED.

   USE PRECAST CONCRETE HEADWALL WITH RODENT SCREEN. SEE STANDARD PLATE 3131 FOR DETAILS.

2. ⅛" PER FT. MINIMUM SLOPE.

3. REFER TO GRADING PLANS FOR ABUTMENT BACKFILL REQUIREMENTS.

APPROVED: JANUARY 13, 2015	STATE OF MINNESOTA DEPARTMENT OF TRANSPORTATION	REVISED	DETAIL NO.
Nancy Daubenberger STATE BRIDGE ENGINEER	DRAINAGE SYSTEM		B910

NO.	DATE	BY	CHECK	DESIGN	REVISION / SUBMITTAL

DESIGNED BY: NRW | CHECKED BY: JSM
DRAWN BY: PGR | CHECKED BY: NRW

AECOM Kimley»Horn

90% SUBMISSION - 01/22/16

METROPOLITAN COUNCIL

SOUTHWEST Green Line LRT Extension

CIVIL - VOLUME 4F
CEDAR LAKE CHANNEL FREIGHT BRIDGE
BRIDGE R0694
BRIDGE DETAILS 2

DISCIPLINE: STRUCTURES
SHEET NAME: CBRR0694-BRG-DTL-005

SHEET 41 OF 50

Jan, 16 2016 09:41 am V:\3400_ADC\CAD\SEGMENT E3\PLAN SHEETS\STRUCTURES\R0694 CLCH-FRT\CBRR0694-BRG-DTL2.dwg By: Nick.Williamson

CONCRETE WEARING COURSE

☐ LOW SLUMP

☐ OTHER _____
TYPE OR MANUFACTURER

EXPANSION JOINTS

JOINT MANUFACTURER

MANUFACTURER'S IDENTIFICATION _____
MFR'S No. AND/OR LETTER DESIGNATION FOR JOINT USED

GLAND MANUFACTURER _____
NAME AND ADDRESS (CITY, STATE)

SIZE OF GLAND _____

MANUFACTURER'S IDENTIFICATION _____
MFR'S No. AND/OR LETTER DESIGNATION FOR GLAND USED

ELASTOMERIC BEARING PADS

PAD MANUFACTURER _____
NAME AND ADDRESS (CITY, STATE)

SPECIAL SURFACE FINISH

SYSTEM: _____ COLOR: _____

FINISHING ROADWAY FACES OF BARRIER RAILING

TYPE: _____ COLOR: _____

ANTI-GRAFFITI COATING

MANUFACTURER _____
NAME AND ADDRESS (CITY, STATE)

PRODUCT NAME: _____ LOCATION: _____

PAINT SYSTEM

Mn/DOT SPECIFICATION NUMBER _____
2478 OR 2479 OR OTHER

MANUFACTURER _____
NAME AND ADDRESS (CITY, STATE)

PRIME COAT _____
Mn/DOT MATERIAL SPECIFICATION NUMBER

INTERMEDIATE COAT _____
Mn/DOT MATERIAL SPECIFICATION NUMBER

FINISH COAT _____ _____
Mn/DOT MATERIAL SPECIFICATION NUMBER COLOR

PLAN QUALITY

RATE 1 (AGREE), 2 (NEUTRAL), OR 3 (DISAGREE, PLEASE COMMENT BELOW)

DIMENSIONING AND DETAILING ADEQUATELY DESCRIBED REQUIRED CONSTRUCTION. _____
BAR LISTS AND QUANTITIES WERE TYPICALLY COMPLETE AND FREE OF ERRORS. _____
SCALE OF DRAWINGS AND OVERALL LEGIBILITY OF LINES AND TEXT WAS GOOD. _____
(SB) SPECIAL PROVISIONS ADEQUATELY DESCRIBED SPECIAL WORK AND PAYMENT. _____

COMMENTS: _____

NUMBER OF BRIDGE
SUPPLEMENTAL AGREEMENTS: _____ COST: $ _____

LIST SIGNIFICANT ERRORS OR OMISSIONS IN PLAN DETAILS OR PAY QUANTITIES IN THE SPACE PROVIDED AT RIGHT.

BRIDGE REMOVAL / BRIDGE OPENING

NUMBER OF AND DATE OLD BRIDGE WAS REMOVED (IF APPLICABLE):

BRIDGE NUMBER _____ DATE REMOVED _____

DATE NEW BRIDGE WAS OPENED TO TRAFFIC _____

NOTIFY THE BRIDGE OFFICE BRIDGE MANAGEMENT UNIT WITH THIS INFORMATION AS SOON AS POSSIBLE. (651) 366-4557

AS-BUILT DETAILS
(AS NEEDED)

OTHER ITEMS ①

① UTILITIES ADDED DURING CONSTRUCTION AND SPECIALTY ITEMS.

FINAL QUANTITIES ENTERED ON SCHEDULE OF QUANTITIES: YES ☐ NO ☐

SUMMARY OF SIGNIFICANT AS-BUILT CHANGES

THE AS-BUILT INFORMATION WAS ADDED TO THE PLAN BY:

_____ _____
INSPECTOR(S) SIGNATURE DATE

CHECKED BY: _____ _____
PROJECT ENGINEER/SUPERVISOR SIGNATURE DATE

AT THE TIME OF THE FINAL, THIS COMPLETED AS-BUILT BRIDGE DATA SHEET MUST BE SUBMITTED TO THE BRIDGE OFFICE - ATTN: REGIONAL CONSTRUCTION ENGINEER (MS610).

REVISION:

APPROVED: NOVEMBER 6, 2013
Nancy Daubenberger
STATE BRIDGE ENGINEER

CERTIFIED BY _____ 7/13/15
LICENSED PROFESSIONAL ENGINEER DATE
NAME: **ENGINEER** LIC. NO. #####

TITLE: AS-BUILT BRIDGE DATA

DES:	DR:	APPROVED:
CHK:	CHK:	

SHEET NO. **42** OF **50** SHEETS

FIG. 5-397.900

BRIDGE NO. **R0694**

Jan, 16 2016 09:42 am V:\3400_ADC\CAD\SEGMENT E3\PLAN SHEETS\STRUCTURES\R0694 CLCH-FRT\CBRR0694-BRG-DTL3.dwg By: Nick.Williamson

CONTRACTED PROFILE

SCALE HOR: 0 50'

SCALE VER: 0 10'

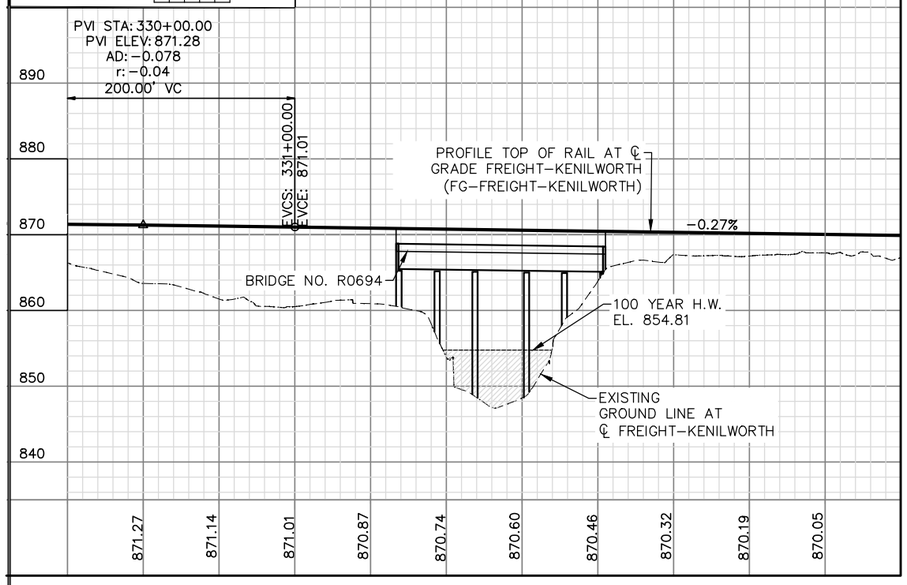

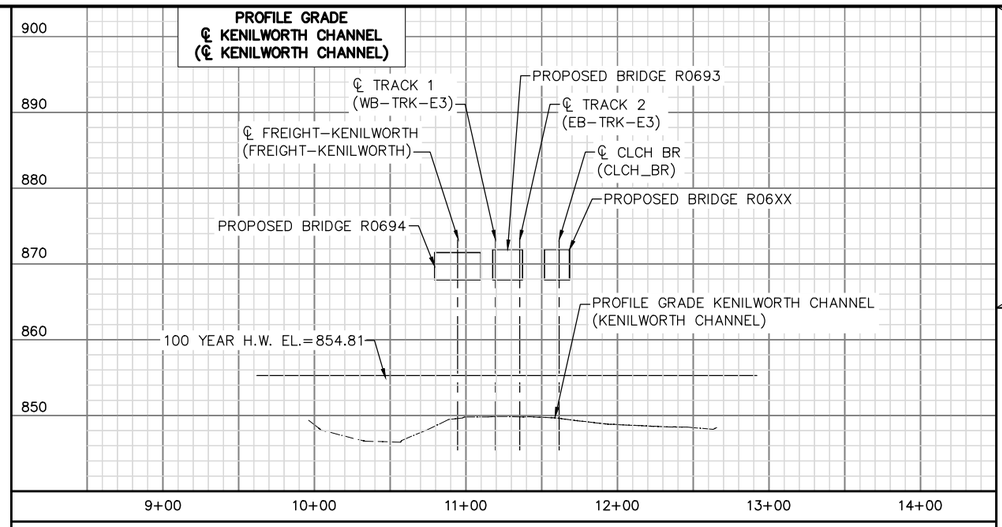

PLAT

SCALE: 0 50'

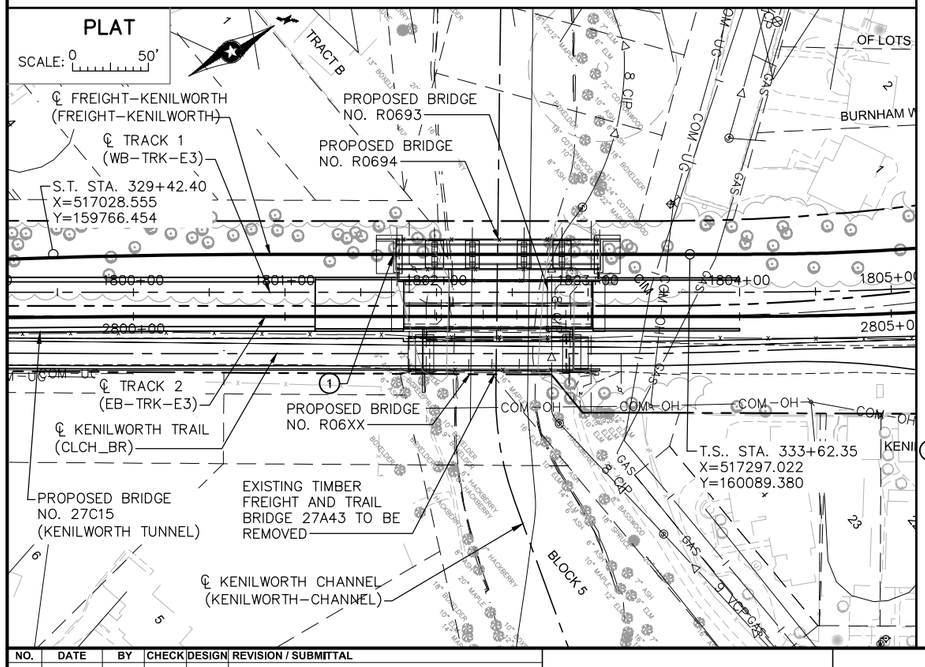

NOTES:

IN PLACE EXISTING TIMBER FREIGHT AND TRAIL BRIDGE 27A43 TO BE REMOVED.

THE SUBSURFACE UTILITY INFORMATION IN THIS PLAN IS UTILITY QUALITY LEVEL D. THIS UTILITY QUALITY LEVEL WAS DETERMINED ACCORDING TO GUIDELINES OF CI/ASCE 38–02, ENTITLED "STANDARD GUIDELINES FOR THE COLLECTION AND DEPICTION OF EXISTING SUBSURFACE UTILITY DATA."

(1) CONTROL POINT 1
℄ FREIGHT–KENILWORTH STA. 331+66.87
X = 517172.055
Y = 159939.064

INDEX MAP

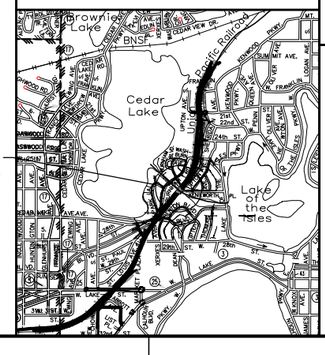

LOCATION ENGINEER'S OBSERVATIONS AT BRIDGE SITE

1. SPECIAL FEATURES: WATERFALLS, DAMS, FLOODS, ICE, DEBRIS SLIDING BANKS, RECREATIONAL BOATING.
2. OTHER BRIDGES OR CULVERTS OVER THE SAME STREAM (PARTICULARY STRUCTURES WHICH CARRY HIGH WATER WITHOUT OVERFLOW OF ROADWAY): GIVEN LOCATION, TYPE, LENGTH, HEIGHT ABOVE HIGH WATER, CROSS–SECTIONAL AREA ETC.
3. APPARENT HIGHWATER ELEVATION OBTAINED FROM:
4. OTHER DATA: APPROX. VELOCITY OF WATER AT TIME OF SURVEY.

HYDRAULIC ENGINEER'S RECOMMENDATION

DATE: 1/22/2016

STREAM OR DITCH DESIGNATION CEDAR LAKE CHANNEL

DRAINAGE AREA 9.4 SQ. MI.

MAX FLOOD ON RECORD 855.43 FT (JULY 1997)

DESIGN FLOOD (100YR. FREQ.): 194.64 C.F.S.
HEADWATER ELEVATION: FT. 854.81
DESIGN MEAN VELOCITY THROUGH STRUCTURE TBD
TOTAL STAGE INCREASE 0.0 FT.
LOW MEMBER AT OR ABOVE ELEVATION 854.58 FT.

WATERWAY AREA REQUIRED BELOW ELEV. 854.81 = 163.62 S.F. AT RIGHT ANGLES TO CHANNEL

BASIC FLOOD (100 YR. FREQ.) 194.64 C.F.S.
HEADWATER ELEVATION: 854.81
TOTAL STAGE INCREASE 0.0 FT.
MEAN VELOCITY THROUGH STRUCTURE 2.5 F.P.S.

FLOWLINE ELEVATION: 847.15 SKEW ANGLE: 0 DEG

ESTIMATED PRLIMINARY TOTAL SCOUR AT PIER EL. N/A (500 YR. FREQ.)

SCOUR CONFIRMATION RECOMMENDATION

DATE: 1/22/2016

TOTAL SCOUR AT PIER EL. N/A (500 YR. FREQ.)
SCOUR CODE: L – STABLE – EVAL

BRIDGE SURVEY SHEETS MADE FROM 2014 MFRA SURVEYS

1ST BENCH MARK (NAVD 88)
BENCHMARK ID PT. 183
ELEVATION = 869.09
N = 159916.74, E = 517227.56
DESCRIPTION = MAG NAIL IN BIT. PATH

2ND BENCH MARK (NAVD 88)
BENCHMARK ID PT. 184
ELEVATION = 867.99
N = 160069.02, E = 517359.05
DESCRIPTION = MAG NAIL IN BIT. PATH

BRIDGE SURVEY 1

TC & W FREIGHT RAIL OVER CEDAR LAKE CHANNEL BETWEEN LAKE OF THE ISLES AND CEDAR LAKE IN MINNEAPOLIS

SEC 32 T 29N R 24W

CITY OF MINNEAPOLIS HENNEPIN COUNTY

BRIDGE NO. R0694

NO.	DATE	BY	CHECK	DESIGN	REVISION / SUBMITTAL

DESIGNED BY: NRW CHECKED BY: JSM
DRAWN BY: PGR CHECKED BY: NRW

AECOM Kimley»Horn

90% SUBMISSION - 01/22/16

METROPOLITAN COUNCIL

SOUTHWEST Green Line LRT Extension

CIVIL - VOLUME 4F
CEDAR LAKE CHANNEL FREIGHT BRIDGE
BRIDGE R0694
BRIDGE SURVEY 1

DISCIPLINE: STRUCTURES

SHEET NAME: CBRR0694-BRG-SUR-001

SHEET 43 OF 50

Jan, 16 2016 09:48 am V:\3400_ADC\CAD\SEGMENT E3\PLAN SHEETS\STRUCTURES\R0694 CLCH-FRT\CBRR0694-BRG-SUR-001.dwg By: Nick.Williamson

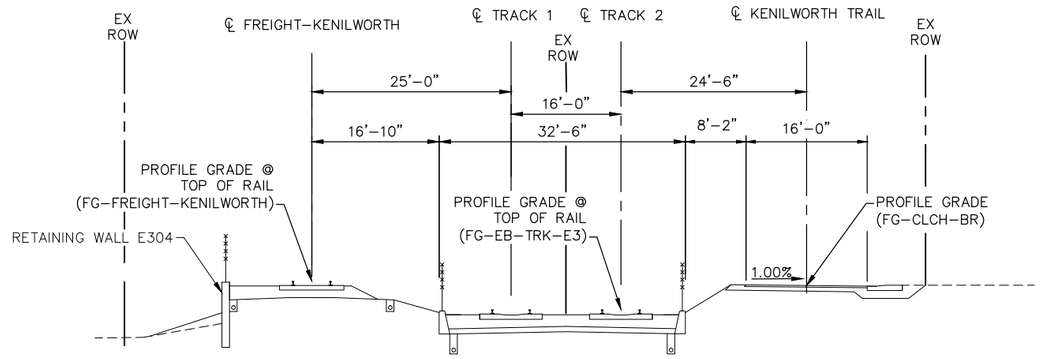

TYPICAL APPROACH SECTION AT BEGIN BRIDGE

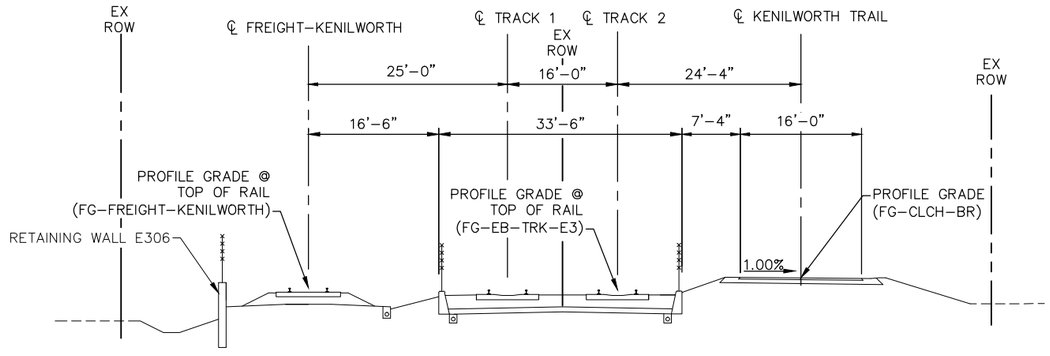

TYPICAL APPROACH SECTION AT END BRIDGE

NO.	DATE	BY	CHECK	DESIGN	REVISION / SUBMITTAL

DESIGNED BY: NRW CHECKED BY: JSM
DRAWN BY: PGR CHECKED BY: NRW

AECOM Kimley»Horn

90% SUBMISSION - 01/22/16

METROPOLITAN COUNCIL

SOUTHWEST Green Line LRT Extension

CIVIL - VOLUME 4F
CEDAR LAKE CHANNEL FREIGHT BRIDGE
BRIDGE R0694
BRIDGE SURVEY 2

DISCIPLINE: STRUCTURES
SHEET NAME: CBRR0694-BRG-SUR-002

SHEET 44 OF 50

Jan, 16 2016 09:49 am V:\3400_ADC\CAD\SEGMENT E3\PLAN SHEETS\STRUCTURES\R0694 CLCH-FRT\CBRR0694-BRG-SUR-002.dwg By: Nick.Williamson

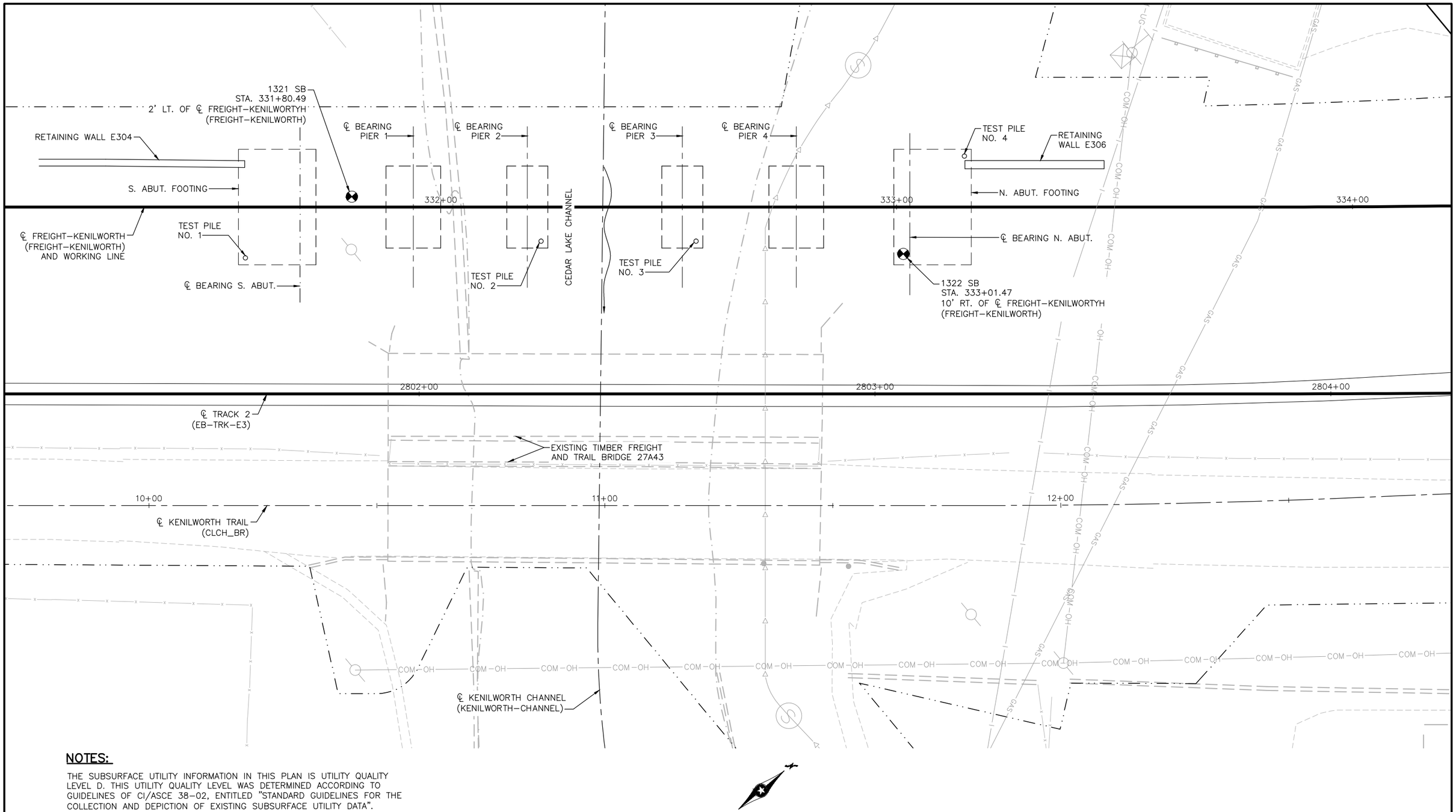

NOTES:

THE SUBSURFACE UTILITY INFORMATION IN THIS PLAN IS UTILITY QUALITY LEVEL D. THIS UTILITY QUALITY LEVEL WAS DETERMINED ACCORDING TO GUIDELINES OF CI/ASCE 38–02, ENTITLED "STANDARD GUIDELINES FOR THE COLLECTION AND DEPICTION OF EXISTING SUBSURFACE UTILITY DATA".

NO.	DATE	BY	CHECK	DESIGN	REVISION / SUBMITTAL

DESIGNED BY: NRW | CHECKED BY: JSM
DRAWN BY: PGR | CHECKED BY: NRW

AECOM Kimley»Horn

90% SUBMISSION - 01/22/16

METROPOLITAN COUNCIL

SOUTHWEST Green Line LRT Extension

CIVIL - VOLUME 4F
CEDAR LAKE CHANNEL FREIGHT BRIDGE
BRIDGE R0694
BRIDGE SURVEY PLAN

DISCIPLINE: STRUCTURES
SHEET NAME: CBRR0694-BRG-BOR-001

SHEET 45 OF 50

Jan, 16 2016 09:51 am V:\3400_ADC\CAD\SEGMENT E3\PLAN SHEETS\STRUCTURES\R0694 CLCH-FRT\CBRR0694-BRG-BOR-001.dwg By: Nick.Williamson

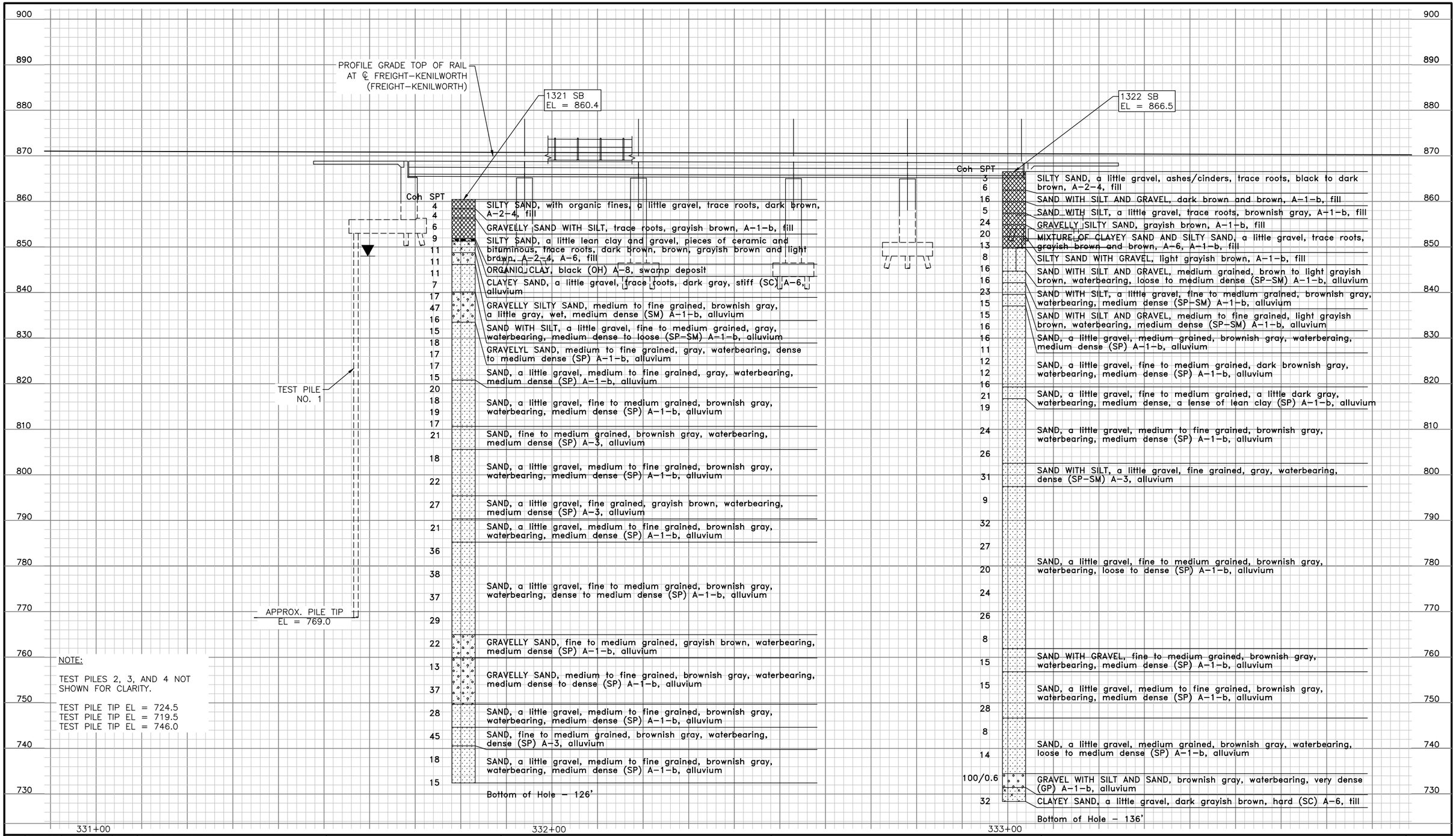

Coh	SPT	
	4	SILTY SAND, with organic fines, a little gravel, trace roots, dark brown, A–2–4, fill
	4	
	6	GRAVELLY SAND WITH SILT, trace roots, grayish brown, A–1–b, fill
	9	SILTY SAND, a little lean clay and gravel, pieces of ceramic and bituminous, trace roots, dark brown, brown, grayish brown and light brown, A–2–4, A–6, fill
	11	
	11	ORGANIC CLAY, black (OH) A–8, swamp deposit
	7	CLAYEY SAND, a little gravel, trace roots, dark gray, stiff (SC) A–6, alluvium
	17	GRAVELLY SILTY SAND, medium to fine grained, brownish gray, a little gray, wet, medium dense (SM) A–1–b, alluvium
	47	
	16	SAND WITH SILT, a little gravel, fine to medium grained, gray, waterbearing, medium dense to loose (SP–SM) A–1–b, alluvium
	15	
	18	GRAVELYL SAND, medium to fine grained, gray, waterbearing, dense to medium dense (SP) A–1–b, alluvium
	17	
	17	SAND, a little gravel, medium to fine grained, gray, waterbearing, medium dense (SP) A–1–b, alluvium
	15	
	20	SAND, a little gravel, fine to medium grained, brownish gray, waterbearing, medium dense (SP) A–1–b, alluvium
	18	
	19	
	17	SAND, fine to medium grained, brownish gray, waterbearing, medium dense (SP) A–3, alluvium
	21	
	18	SAND, a little gravel, medium to fine grained, brownish gray, waterbearing, medium dense (SP) A–1–b, alluvium
	22	
	27	SAND, a little gravel, fine grained, grayish brown, waterbearing, medium dense (SP) A–3, alluvium
	21	SAND, a little gravel, medium to fine grained, brownish gray, waterbearing, medium dense (SP) A–1–b, alluvium
	36	
	38	SAND, a little gravel, fine to medium grained, brownish gray, waterbearing, dense to medium dense (SP) A–1–b, alluvium
	37	
	29	
	22	GRAVELLY SAND, fine to medium grained, grayish brown, waterbearing, medium dense (SP) A–1–b, alluvium
	13	GRAVELLY SAND, medium to fine grained, brownish gray, waterbearing, medium dense to dense (SP) A–1–b, alluvium
	37	
	28	SAND, a little gravel, medium to fine grained, brownish gray, waterbearing, medium dense (SP) A–1–b, alluvium
	45	SAND, fine to medium grained, brownish gray, waterbearing, dense (SP) A–3, alluvium
	18	SAND, a little gravel, medium to fine grained, brownish gray, waterbearing, medium dense (SP) A–1–b, alluvium
	15	
		Bottom of Hole – 126’

Coh	SPT	
	3	SILTY SAND, a little gravel, ashes/cinders, trace roots, black to dark brown, A–2–4, fill
	6	
	16	SAND WITH SILT AND GRAVEL, dark brown and brown, A–1–b, fill
	5	SAND WITH SILT, a little gravel, trace roots, brownish gray, A–1–b, fill
	24	GRAVELLY SILTY SAND, grayish brown, A–1–b, fill
	20	MIXTURE OF CLAYEY SAND AND SILTY SAND, a little gravel, trace roots, grayish brown and brown, A–6, A–1–b, fill
	13	
	8	SILTY SAND WITH GRAVEL, light grayish brown, A–1–b, fill
	16	SAND WITH SILT AND GRAVEL, medium grained, brown to light grayish brown, waterbearing, loose to medium dense (SP–SM) A–1–b, alluvium
	16	
	23	SAND WITH SILT, a little gravel, fine to medium grained, brownish gray, waterbearing, medium dense (SP–SM) A–1–b, alluvium
	15	
	15	SAND WITH SILT AND GRAVEL, medium to fine grained, light grayish brown, waterbearing, medium dense (SP–SM) A–1–b, alluvium
	16	
	16	SAND, a little gravel, medium grained, brownish gray, waterbearing, medium dense (SP) A–1–b, alluvium
	11	
	12	SAND, a little gravel, fine to medium grained, dark brownish gray, waterbearing, medium dense (SP) A–1–b, alluvium
	12	
	16	
	21	SAND, a little gravel, fine to medium grained, a little dark gray, waterbearing, medium dense, a lense of lean clay (SP) A–1–b, alluvium
	19	
	24	SAND, a little gravel, medium to fine grained, brownish gray, waterbearing, medium dense (SP) A–1–b, alluvium
	26	
	31	SAND WITH SILT, a little gravel, fine grained, gray, waterbearing, dense (SP–SM) A–3, alluvium
	9	
	32	
	27	
	20	SAND, a little gravel, fine to medium grained, brownish gray, waterbearing, loose to dense (SP) A–1–b, alluvium
	24	
	26	
	8	
	15	SAND WITH GRAVEL, fine to medium grained, brownish gray, waterbearing, medium dense (SP) A–1–b, alluvium
	15	SAND, a little gravel, medium to fine grained, brownish gray, waterbearing, medium dense (SP) A–1–b, alluvium
	28	
	8	
	14	SAND, a little gravel, medium grained, brownish gray, waterbearing, loose to medium dense (SP) A–1–b, alluvium
100/0.6		GRAVEL WITH SILT AND SAND, brownish gray, waterbearing, very dense (GP) A–1–b, alluvium
	32	CLAYEY SAND, a little gravel, dark grayish brown, hard (SC) A–6, till
		Bottom of Hole – 136’

NO.	DATE	BY	CHECK	DESIGN	REVISION / SUBMITTAL

DESIGNED BY: NRW | CHECKED BY: JSM
DRAWN BY: PGR | CHECKED BY: NRW

AECOM Kimley»Horn

90% SUBMISSION - 01/22/16

METROPOLITAN COUNCIL

SOUTHWEST Green Line LRT Extension

CIVIL - VOLUME 4F
CEDAR LAKE CHANNEL FREIGHT BRIDGE
BRIDGE R0694
BRIDGE SURVEY PROFILE

DISCIPLINE: STRUCTURES

SHEET NAME: CBRR0694-BRG-BOR-002

SHEET 46 OF 50

Jan, 16 2016 09:52 am V:\3400_ADC\CAD\SEGMENT E3\PLAN SHEETS\STRUCTURES\R0694 CLCH-FRT\CBRR0694-BRG-BOR-002.dwg By: Nick.Williamson

EXISTING WPA WALL TO REMAIN
EXISTING BNSF ROW
SOE
BRIDGE R0694 S. ABUT.
BRIDGE R0694 PIER 1
BRIDGE R0694 PIER 2
RETAINING WALL E304
332+00
333+00
℄ FREIGHT–KENILWORTH (FREIGHT–KENILWORTH)
CEDAR LAKE CHANNEL
PLACE SEAL SLAB AS NECESSARY FOR DE–WATERING
EXISTING WPA WALL TO BE REMOVED
EXISTING BNSF/HCRRA
EXISTING FREIGHT BRIDGE
2802+00
2803+00
℄ TRACK 2 (EB–TRK–E3)
EXISTING FREIGHT TRACK
EXISTING TRAIL
EXISTING TRAIL BRIDGE 27A43
10+00
11+00
12+00
℄ KENILWORTH TRAIL (CLCH_BR)
EXISTING HCRRA ROW
COM–OH
GAS
EXISTING SANITARY SEWER TO BE RELOCATED. SEE UTILITY PLANS FOR DETAILS.

STAGING REQUIREMENTS:

ALL TRACKS SHALL BE KEPT OPEN FOR TRAIN USE DURING CONSTRUCTION EXCEPT WITH PRIOR APPROVAL.

A 25' WIDE HORIZONTAL CLEARANCE SHALL BE MAINTAINED IN THE CHANNEL EXCEPT AS NOTED OTHERWISE.

WITHIN THE 25' WIDE HORIZONTAL CLEARANCE, NO CONSTRUCTION MATERIAL (INCLUDING FORMWORK) MAY EXTEND BELOW ELEVATION 863.03 EXCEPT AS NOTED OTHERWISE.

DURING CONSTRUCTION VIBRATIONS AT ADJACENT PROPERTIES SHALL BE MONITORED AND LIMITED.

STAGING NOTES:

MAINTAIN EXISTING FREIGHT AND TRAIL TRAFFIC ON BRIDGE 27A43.

SURVEY AND REMOVE EXISTING WPA WALL AS REQUIRED.

INSTALL SOE AS SHOWN FOR CONSTRUCTION OF SOUTH PORTION OF BRIDGE R0694.

EXCAVATE AS NECESSARY TO CONSTRUCT RETAINING WALL E304 AND SOUTH PORTION OF BRIDGE R0694.

CONSTRUCT RETAINING WALL E304 AND SOUTH PORTION OF BRIDGE R0694.

BACKFILL STRUCTURE. REMOVE SOE.

PERFORM UTILITY WORK ON SANITARY SEWER AND WATER MAIN PER THE UTILITY PLAN.

PROPOSED CONSTRUCTION SEQUENCE STAGE 1

NO.	DATE	BY	CHECK	DESIGN	REVISION / SUBMITTAL

DESIGNED BY: NRW | CHECKED BY: JSM
DRAWN BY: BAC | CHECKED BY: NRW

AECOM Kimley»Horn

90% SUBMISSION - 01/22/16

METROPOLITAN COUNCIL

SOUTHWEST Green Line LRT Extension

CIVIL - VOLUME 4F
CEDAR LAKE CHANNEL FREIGHT BRIDGE
BRIDGE R0694
STAGING PLAN 1

DISCIPLINE: STRUCTURES
SHEET NAME: CBRR0694-BRG-STG-001

SHEET 47 OF 50

Jan, 16 2016 09:55 am V:\3400_ADC\CAD\SEGMENT E3\PLAN SHEETS\STRUCTURES\R0694 CLCH-FRT\CBRR0694-BRG-STG-001.dwg By: Nick.Williamson

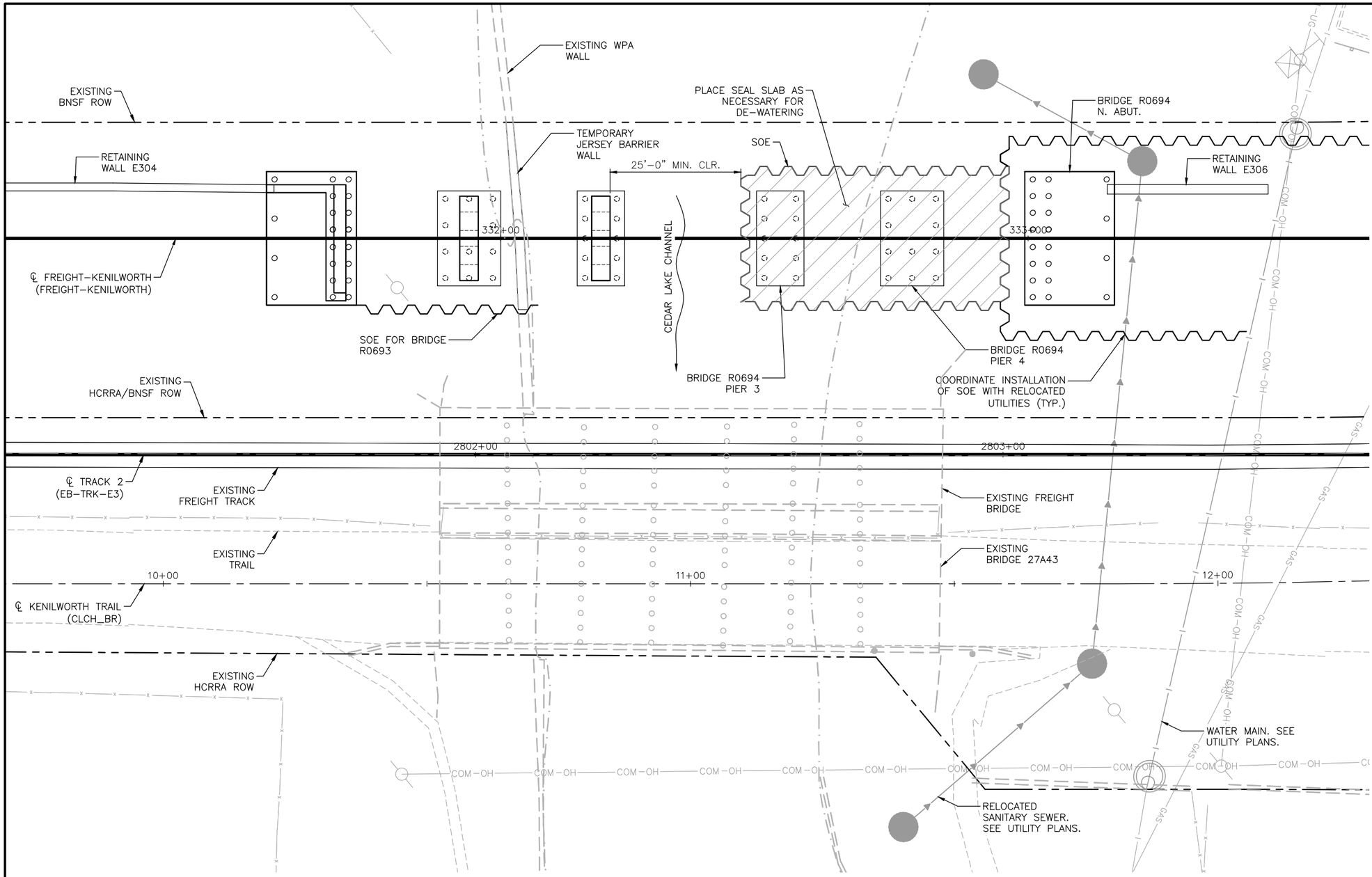

STAGING REQUIREMENTS:

ALL TRACKS SHALL BE KEPT OPEN FOR TRAIN USE DURING CONSTRUCTION EXCEPT WITH PRIOR APPROVAL.

A 25' WIDE HORIZONTAL CLEARANCE SHALL BE MAINTAINED IN THE CHANNEL EXCEPT AS NOTED OTHERWISE.

WITHIN THE 25' WIDE HORIZONTAL CLEARANCE, NO CONSTRUCTION MATERIAL (INCLUDING FORMWORK) MAY EXTEND BELOW ELEVATION 863.03 EXCEPT AS NOTED OTHERWISE.

DURING CONSTRUCTION VIBRATIONS AT ADJACENT PROPERTIES SHALL BE MONITORED AND LIMITED.

STAGING NOTES:

MAINTAIN EXISTING FREIGHT AND TRAIL TRAFFIC ON BRIDGE 27A43.

INSTALL SOE AS SHOWN FOR BRIDGE R0693 SOUTH ABUTMENT.

PLACE JERSEY BARRIER AT LOCATION OF WPA WALL FOR TEMPORARY RETAINMENT

INSTALL SOE FOR CONSTRUCTION OF NORTH PORTION OF BRIDGE R0694.

EXCAVATE AS NECESSARY TO CONSTRUCT RETAINING WALL E306 AND NORTH PORTION OF BRIDGE R0694.

CONSTRUCT RETAINING WALL E304 AND SOUTH PORTION OF BRIDGE R0694.

BACKFILL STRUCTURE. REMOVE SOE.

CONSTRUCT R0694 SUPERSTRUCTURE, BALLAST, AND RAIL. MOVE FREIGHT TRAFFIC TO BRIDGE R0694.

PROPOSED CONSTRUCTION SEQUENCE STAGE 2

NO.	DATE	BY	CHECK	DESIGN	REVISION / SUBMITTAL

DESIGNED BY: NRW | CHECKED BY: JSM
DRAWN BY: BAC | CHECKED BY: NRW

AECOM Kimley»Horn

90% SUBMISSION - 01/22/16

METROPOLITAN COUNCIL

SOUTHWEST Green Line LRT Extension

CIVIL - VOLUME 4F
CEDAR LAKE CHANNEL FREIGHT BRIDGE
BRIDGE R0694
STAGING PLAN 2

DISCIPLINE: STRUCTURES
SHEET NAME: CBRR0694-BRG-STG-002

SHEET 48 OF 50

Jan, 16 2016 09:58 am V:\3400_ADC\CAD\SEGMENT E3\PLAN SHEETS\STRUCTURES\R0694 CLCH-FRT\CBRR0694-BRG-

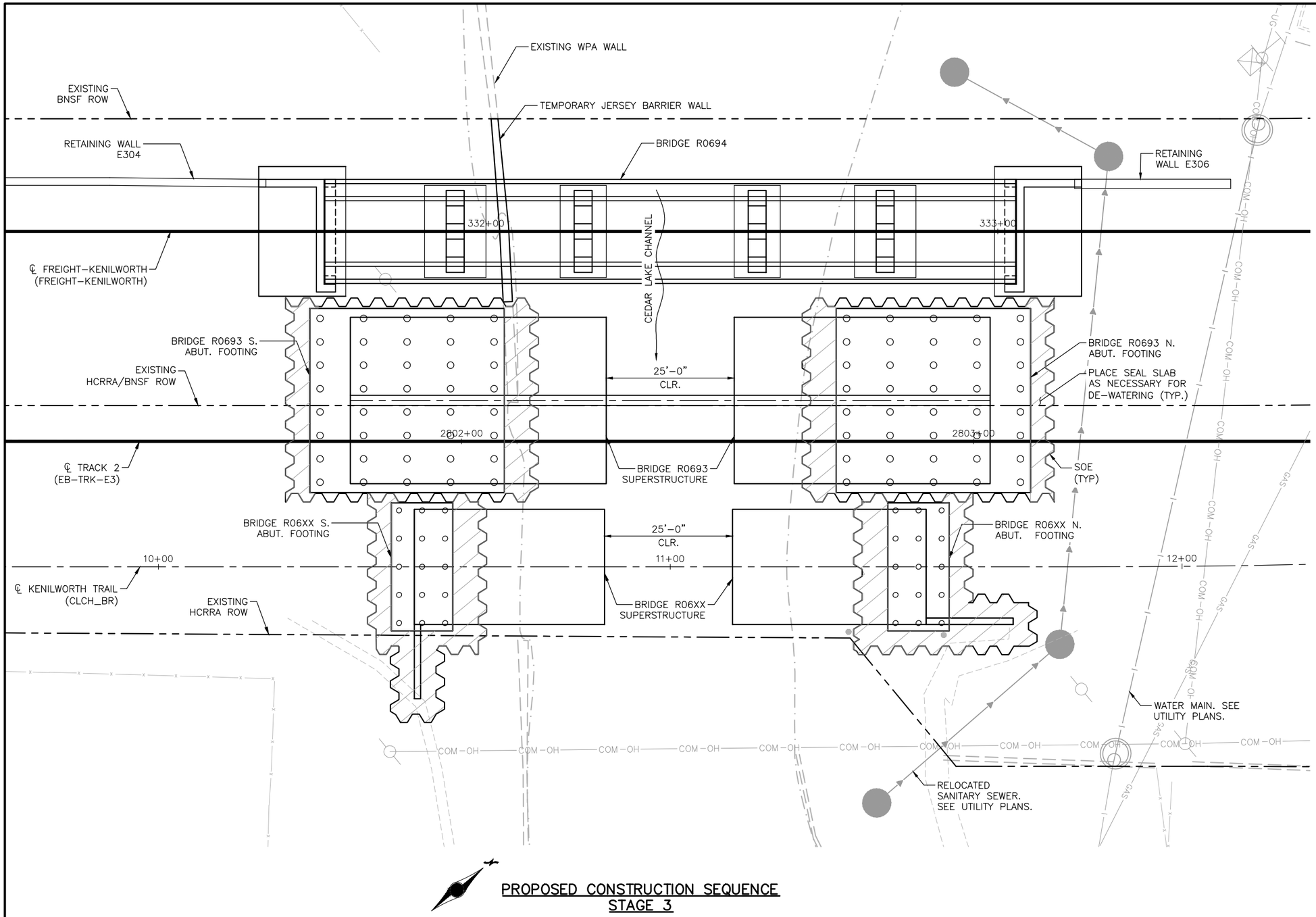

PROPOSED CONSTRUCTION SEQUENCE
STAGE 3

STAGING REQUIREMENTS:

ALL TRACKS SHALL BE KEPT OPEN FOR TRAIN USE DURING CONSTRUCTION EXCEPT WITH PRIOR APPROVAL.

A 25' WIDE HORIZONTAL CLEARANCE SHALL BE MAINTAINED IN THE CHANNEL EXCEPT AS NOTED OTHERWISE.

WITHIN THE 25' WIDE HORIZONTAL CLEARANCE, NO CONSTRUCTION MATERIAL (INCLUDING FORMWORK) MAY EXTEND BELOW ELEVATION 863.03 EXCEPT AS NOTED OTHERWISE.

DURING CONSTRUCTION VIBRATIONS AT ADJACENT PROPERTIES SHALL BE MONITORED AND LIMITED.

STAGING NOTES:

DETOUR TRAIL TRAFFIC. CONSTRUCT BRIDGE 27C15 (KENILWORTH TUNNEL)

REMOVE EXISTING FREIGHT TRACK, TRAIL, AND BRIDGE 27A43.

INSTALL SOE FOR CONSTRUCTION OF BRIDGES R0693 AND R06XX ABUTMENTS.

EXCAVATE AS NECESSARY TO CONSTRUCT BRIDGES R0693 AND R06XX ABUTMENTS.

CONSTRUCT BRIDGES R0693 AND R06XX ABUTMENTS WITH TEMPORARY STABILITY BRACKETS. (SEE ABUTMENT DETAILS).

REMOVE SOE AT FRONT FACE OF ABUTMENT. DO NOT BACKFILL BEHIND ABUTMENT..

INSTALL FALSEWORK IN CHANNEL TO SUPPORT SUPERSTRUCTURE END POURS.

CONSTRUCT SUPERSTRUCTURE END POURS FOR BRIDGES R0693 AND R06XX. FALSEWORK SHALL NOT BE REMOVED UNTIL CLOSURE POUR IS COMPLETE.

NO.	DATE	BY	CHECK	DESIGN	REVISION / SUBMITTAL

DESIGNED BY: NRW | CHECKED BY: JSM
DRAWN BY: BAC | CHECKED BY: NRW

AECOM Kimley»Horn

90% SUBMISSION - 01/22/16

METROPOLITAN COUNCIL

SOUTHWEST Green Line LRT Extension

CIVIL - VOLUME 4F
CEDAR LAKE CHANNEL FREIGHT BRIDGE
BRIDGE R0694
STAGING PLAN 3

DISCIPLINE: STRUCTURES
SHEET NAME: CBRR0694-BRG-STG-003

SHEET 49 OF 50

Jan, 16 2016 10:01 am V:\3400_ADC\CAD\SEGMENT E3\PLAN SHEETS\STRUCTURES\R0694 CLCH-FRT\CBRR0694-BRG-STG-003.dwg By: Nick.Williamson

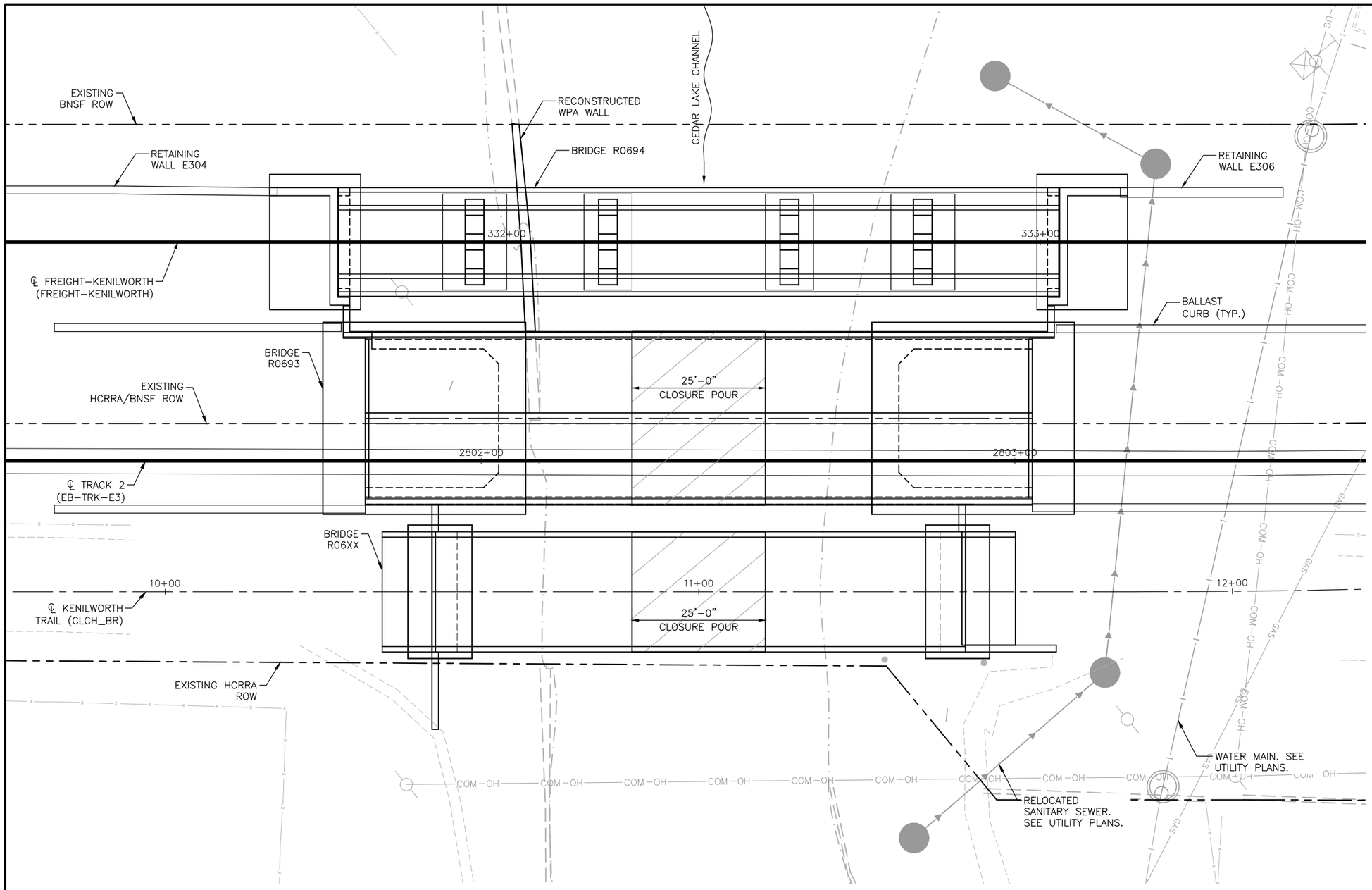

STAGING REQUIREMENTS:

ALL TRACKS SHALL BE KEPT OPEN FOR TRAIN USE DURING CONSTRUCTION EXCEPT WITH PRIOR APPROVAL.

A 25' WIDE HORIZONTAL CLEARANCE SHALL BE MAINTAINED IN THE CHANNEL EXCEPT AS NOTED OTHERWISE.

WITHIN THE 25' WIDE HORIZONTAL CLEARANCE, NO CONSTRUCTION MATERIAL (INCLUDING FORMWORK) MAY EXTEND BELOW ELEVATION 863.03 EXCEPT AS NOTED OTHERWISE.

DURING CONSTRUCTION VIBRATIONS AT ADJACENT PROPERTIES SHALL BE MONITORED AND LIMITED.

DURING THE CLOSURE POUR, A 20' WIDE HORIZONTAL CLEARANCE SHALL BE MAINTAINED. WITHIN THIS 20 FT. HORIZONTAL CLEARANCE, NO CONSTRUCTION MATERIAL MAY EXTEND BELOW EXCAVATION 862.03.

STAGING NOTES:

TEMPORARILY REDUCE ALLOWABLE CLEARANCES AS NOTED ABOVE. INSTALL CLOSURE POUR FORMWORK FOR BRIDGES R0694 AND R06XX. CLOSURE POUR FORMWORK SHALL SPAN OVER THE CHANNEL SUCH THAT THE REDUCED CLEARANCE ENVELOPE IS MAINTAINED.

CONSTRUCT CLOSURE POURS FOR BRIDGES R0693 AND R06XX.

REMOVE TEMP. STABILITY BRACKETS. REMOVE SOE. BACKFILL STRUCTURES.

REMOVE ALL FORMWORK AND FALSEWORK.

CONSTRUCT TRAIL, BALLAST WALLS, BALLAST, TRACK.

SHIFT TRAIL TRAFFIC TO NEW BRIDGE R06XX. REOPEN TO PEDESTRIANS.

RECONSTRUCT WPA WALLS AS REQUIRED.

PROPOSED CONSTRUCTION SEQUENCE STAGE 4

NO.	DATE	BY	CHECK	DESIGN	REVISION / SUBMITTAL

DESIGNED BY: NRW | CHECKED BY: JSM
DRAWN BY: BAC | CHECKED BY: NRW

AECOM Kimley»Horn

90% SUBMISSION - 01/22/16

METROPOLITAN COUNCIL

SOUTHWEST Green Line LRT Extension

CIVIL - VOLUME 4F
CEDAR LAKE CHANNEL FREIGHT BRIDGE
BRIDGE R0694
STAGING PLAN 4

DISCIPLINE: STRUCTURES
SHEET NAME: CBRR0694-BRG-STG-004

SHEET 50 OF 50

Jan, 16 2016 10:03 am V:\3400_ADC\CAD\SEGMENT E3\PLAN SHEETS\STRUCTURES\R0694 CLCH-FRT\CBRR0694-BRG-STG-004.dwg By: Nick.Williamson

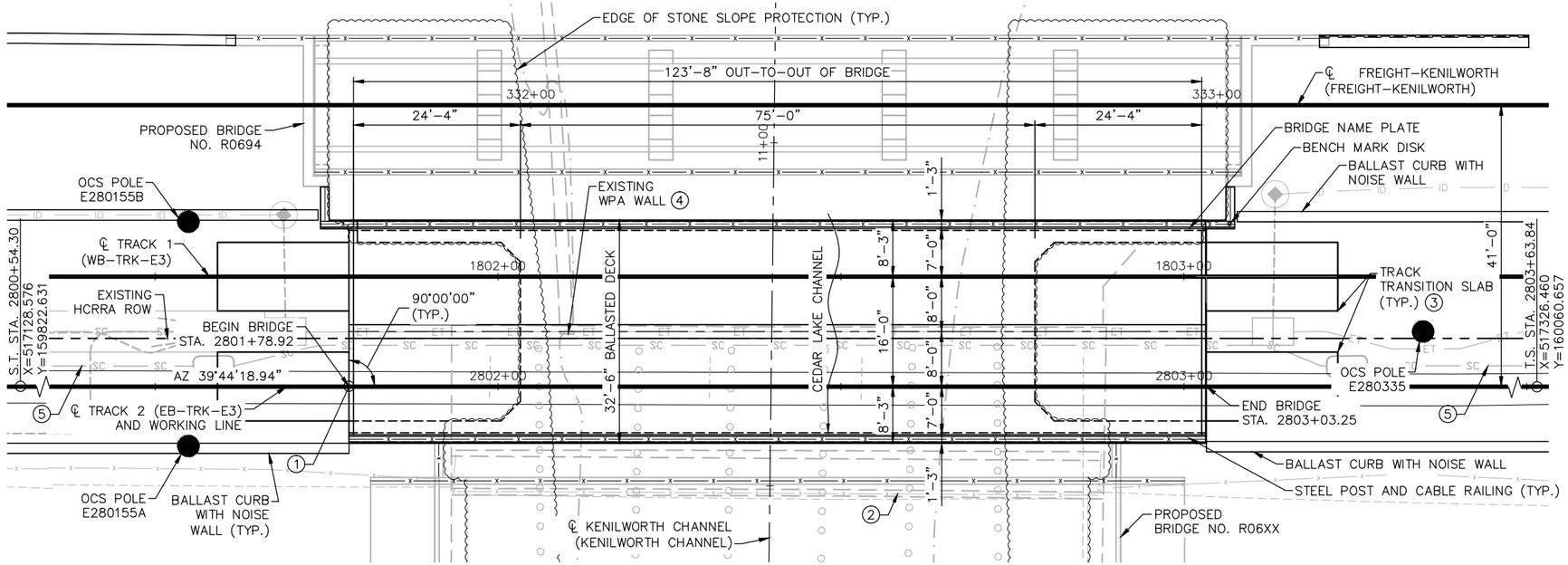

NOTES:

SEE BRIDGE SURVEY SHEET FOR IN PLACE UTILITIES.

SEE STAGING PLANS FOR SOE.

HATCHED AREA TO BE REMOVED.

(1) CONTROL POINT 1
℄ TRACK 2 STA. 2801+78.25
X = 517207.817
Y = 159917.946

(2) IN PLACE BRIDGE 27A43, A 45'-8" WIDE X 92'-0" LONG TIMBER FREIGHT AND TRAIL BRIDGE TO BE REMOVED. SEE STAGING PLANS FOR REMOVAL NOTES.

GENERAL PLAN

0 5' 10' 20'

SCALE IN FEET

(3) SEE TRACK PLANS FOR TRANSITION SLAB DETAILS

(4) SEE STAGING PLANS FOR LIMITS OF WPA WALL REMOVAL AND RECONSTRUCTION.

(5) SEE SYSTEMS PLANS.

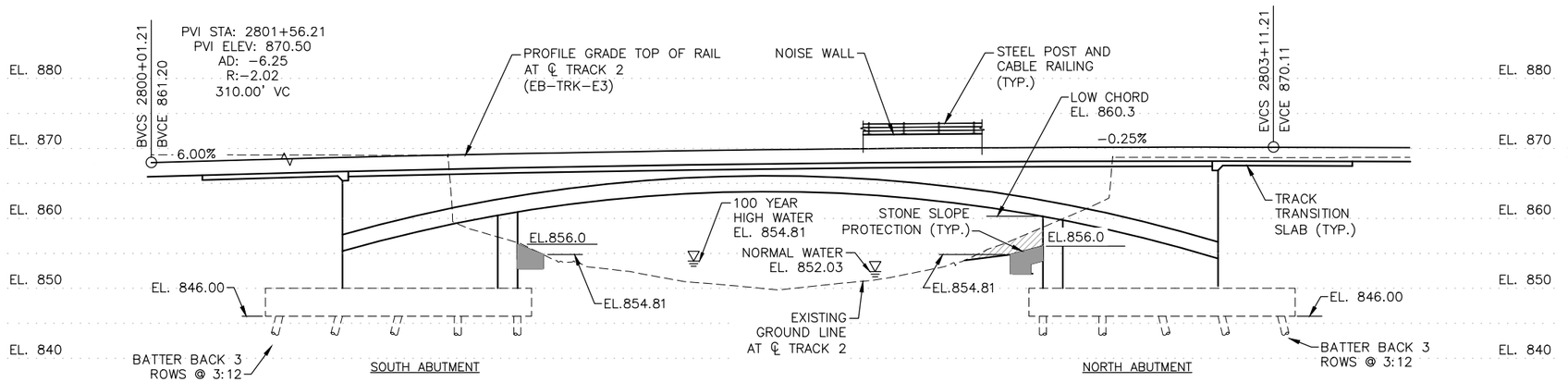

GENERAL ELEVATION

0 5' 10' 20'

SCALE IN FEET

DESIGN DATA

AASHTO LRFD BRIDGE DESIGN SPECIFICATIONS, 7TH EDITION, 2014 WITH 2015 INTERIM REVISIONS.

SOUTHWEST LIGHT RAIL TRANSIT DESIGN CRITERIA (REVISION 4.0)

LOAD AND RESISTANCE FACTOR DESIGN METHOD

LRV & MV LOADING DIAGRAM SHOWN ON SHEET 2

MATERIAL DESIGN PROPERTIES
REINFORCED CONCRETE:
f'c = 4000 PSI n = 8
fy = 60000 PSI REINFORCEMENT

DESIGN SPEED: OVER = 45 MPH (LRT)
UNDER = N/A

DECK AREA 4019 SQ. FT.

LIST OF SHEETS

NO.	DESCRIPTION
1	GENERAL PLAN AND ELEVATION
2	TRANSVERSE SECTION & QUANTITIES
3	BRIDGE LAYOUT
4–6	SOUTH ABUTMENT DETAILS
7–11	SOUTH ABUTMENT REINFORCEMENT
12–14	NORTH ABUTMENT DETAILS
15–19	NORTH ABUTMENT REINFORCEMENT
20–22	SUPERSTRUCTURE DETAILS
23–25	SUPERSTRUCTURE REINFORCEMENT
26	CONCRETE PARAPET
27	STEEL POST AND CABLE RAILING DETAIL
28	STONE SLOPE PROTECTION
29–30	BRIDGE DETAILS
31	AS-BUILT BRIDGE DATA
32–33	BRIDGE SURVEY
34	BRIDGE SURVEY PLAN
35	BRIDGE SURVEY PROFILE
36–39	STAGING PLANS

BRIDGE NO. R0693

SOUTHWEST LRT OVER CEDAR LAKE CHANNEL BETWEEN LAKE OF THE ISLES AND CEDAR LAKE IN MINNEAPOLIS

125'-0" CAST-IN-PLACE CONCRETE BRIDGE
32'-6" RAILWAY
0°00'00.00" SKEW

BRIDGE ID NO. 209

GENERAL PLAN AND ELEVATION

SEC 32 T 29N R 24W
CITY OF MINNEAPOLIS HENNEPIN COUNTY

JOB NO.: T9N635 | STATE PROJ. NO.: 9909-01 | MNDOT REVIEW: JOE NIETFELD

NO.	DATE	BY	CHECK	DESIGN	REVISION / SUBMITTAL

DESIGNED BY: NRW | CHECKED BY: JSM
DRAWN BY: PGR | CHECKED BY: NRW

AECOM Kimley»Horn

90% SUBMISSION - 01/22/16

METROPOLITAN COUNCIL | SOUTHWEST Green Line LRT Extension

CIVIL - VOLUME 4F
CEDAR LAKE CHANNEL LRT BRIDGE
BRIDGE R0693
GENERAL PLAN AND ELEVATION

DISCIPLINE: STRUCTURES
SHEET NAME: CBRR0693-BRG-GPE-001

SHEET 1 OF 39

Jan, 16 2016 10:07 am V:\3400_ADC\CAD\SEGMENT E3\PLAN SHEETS\STRUCTURES\R0693 CLCH-LRT\CBRR0693-BRG-GPE.dwg By: Nick.Williamson

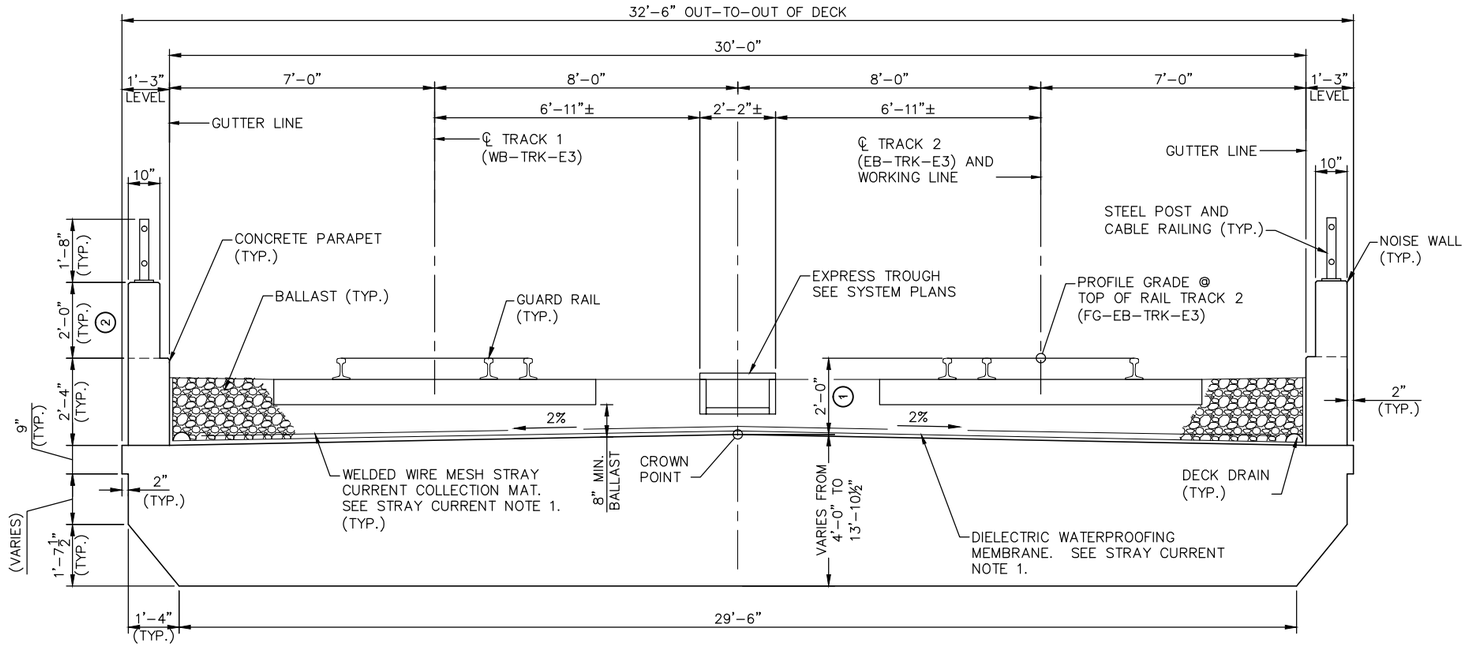

TRANSVERSE SECTION
(AT MIDSPAN)

0' 1' 2' 4'
SCALE IN FEET

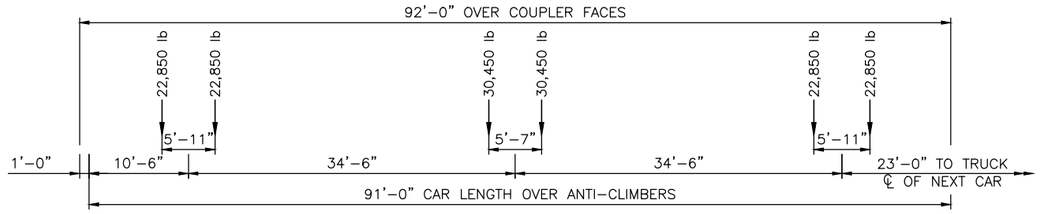

LIGHT RAIL VEHICLE LOADING DIAGRAM

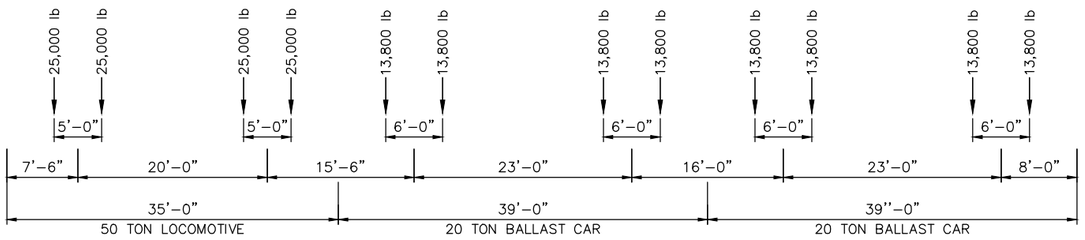

MAINTENANCE TRAIN LOADING DIAGRAM

NOTES:

1. THE LRT TRAIN SHALL CONSIST OF EITHER ONE, TWO, OR THREE CARS, WHICHEVER PRODUCES THE MAXIMUM LOAD FOR THE ELEMENT UNDER CONSIDERATION.
2. AXLE LOAD IN POUNDS.
3. LOADING DIAGRAM REPRESENTS MAXIMUM LOAD AT EACH TRUCK.

NOTES:

1. THE MAINTENANCE TRAIN SHALL CONSIST OF ONE LOCOMOTIVE AND ONE, TWO, THREE OR FOUR BALLAST CARS, WHICHEVER PRODUCES THE MAXIMUM LOAD FOR THE ELEMENT UNDER CONSIDERATION.
2. AXLE LOAD IN POUNDS.
3. WEIGHT OF EMPTY BALLAST CAR IS 15,000 POUNDS.

SCHEDULE OF QUANTITIES

SPEC. SECTION	ITEM	UNIT	QUANTITY
---	CONSTRUCT BRIDGE R0693	LUMP SUM	LS

COMPONENT ITEMS SUMMARY (BRIDGE R0693)

SPEC. SECTION (3)	COMPONENT ITEM	UNIT (2)	QUANTITY (2)
2401	STRUCTURAL CONCRETE (1G52)	CU. YD.	
(1) 2401	STRUCTURAL CONCRETE (3B52)	CU. YD.	
2401	STRUCTURAL CONCRETE (3JM)	CU. YD.	
2401	REINFORCEMENT BARS	POUND	
2401	REINFORCEMENT BARS (EPOXY COATED)	POUND	
SB-XX	ARCHITECTURAL SURFACE FINISH (SINGLE COLOR)	SQ. FT.	
2452	C-I-P CONCRETE PILING INSTALLED 16"	LIN. FT.	
2452	C-I-P CONCRETE TEST PILE 55 FT LONG 16"	EACH	
2452	C-I-P CONCRETE TEST PILE 60 FT LONG 16"	EACH	
2481	MEMBRANE WATERPROOFING SYSTEM	LUMP SUM	
2502	DRAINAGE SYSTEM (TYPE B910)	LUMP SUM	
SB-XX	STONE SLOPE PROTECTION	CU. YD.	
2511	GEOTEXTILE FILTER TYPE VII	SQ. YD.	
SB-XX	STEEL POST-AND-CABLE RAILING	LIN. FT.	

NOTES:

NO OCS POLES ARE LOCATED ON BRIDGE.

(1) A BENCH MARK IS REQUIRED. LOCATED AT NW CORNER OF THE BRIDGE. STATE WILL FURNISH DISK. BEND PRONGS OUTWARD TO ANCHOR DISK IN CONCRETE. BOTTOM OF DISK TOP TO BE PLACED FLUSH WITH CONCRETE.

(2) QUANTITIES LISTED FOR THE COMPONENT ITEMS OF THE LUMP SUM BR R0693 ARE FOR INFORMATION PURPOSES. ANY ADDITIONAL ITEMS OR CHANGES IN QUANTITIES REQUIRED SHALL BE PROVIDED BY THE CONTRACTOR WITH NO ADDITIONAL COMPENSATION.

(3) MEASUREMENT AND PAYMENT FOR COMPONENT ITEMS SHALL BE PART OF THE LUMP SUM PAYMENT FOR BR R0693. REFER TO MNDOT STANDARD SPECIFICATION OR SPECIAL PROVISION FOR TECHNICAL SPECIFICATION REQUIREMENTS FOR ALL PROVISION OTHER THAN MEASUREMENT AND PAYMENT REQUIREMENTS.

① TOP OF RAIL TO CROWN POINT.

② NOISE WALL TO BE 2'-0" ABOVE TOP OF RAIL.

CONSTRUCTION NOTES

THE 2016 EDITION OF THE MINNESOTA DEPARTMENT OF TRANSPORTATION "STANDARD SPECIFICATIONS FOR CONSTRUCTION" SHALL GOVERN.

THE BAR SIZES SHOWN IN THIS PLAN ARE IN U.S. CUSTOMARY DESIGNATIONS. THE FIRST DIGIT OR THE FIRST TWO DIGITS OF EACH BAR MARK INDICATE THE BAR SIZE.

BARS MARKED WITH THE SUFFIX "E" SHALL BE EPOXY COATED IN ACCORDANCE WITH SPEC. 3301.

THE SUBSURFACE UTILITY INFORMATION IN THIS PLAN IS UTILITY QUALITY LEVEL D. THIS UTILITY QUALITY LEVEL WAS DETERMINED ACCORDING TO THE GUIDELINES OF CI/ASCE 38-02, ENTITLED "STANDARD GUIDELINES FOR THE COLLECTION AND DEPICTION OF EXISTING SUBSURFACE UTILITY DATA".

THE PILE LOADS SHOWN IN THE PLANS AND THE CORRESPONDING NOMINAL PILE BEARING RESISTANCE (Rn) WERE COMPUTED USING LRFD METHODOLOGY. PILE BEARING RESISTANCE DETERMINED IN THE FIELD SHALL INCORPORATE THE METHODS AND/OR FORMULAS DESCRIBED IN THE SPECIAL PROVISIONS.

GROUNDING NOTES:

SEE SHEETS ELE-SITE-SCH-504, ELE-SITE-DTL-600, ELE-SITE-DTL-601 AND ELE-SITE-DTL-602 FOR ADDITIONAL FENCE GROUNDING INFORMATION. FOR BRIDGES, ABUTMENTS AND RETAINING WALLS THAT DON'T HAVE STRAY CURRENT SYSTEMS, GROUND THE FENCE AS SHOWN IN THE RAILING DETAIL.

NO.	DATE	BY	CHECK	DESIGN	REVISION / SUBMITTAL

DESIGNED BY: NRW CHECKED BY: JSM
DRAWN BY: PGR CHECKED BY: NRW

AECOM Kimley»Horn

90% SUBMISSION - 01/22/16

METROPOLITAN COUNCIL

SOUTHWEST Green Line LRT Extension

CIVIL - VOLUME 4F
CEDAR LAKE CHANNEL LRT BRIDGE
BRIDGE R0693
TRANSVERSE SECTION & QUANTITIES

DISCIPLINE: STRUCTURES
SHEET NAME: CBRR0693-BRG-TRN-001

SHEET 2 OF 39

Jan. 16 2016 10:07 am V:\3400_ADC\CAD\SEGMENT E3\PLAN SHEETS\STRUCTURES\R0693 CLCH-LRT\CBRR0693-BRG-TRN.dwg By: Nick.Williamson

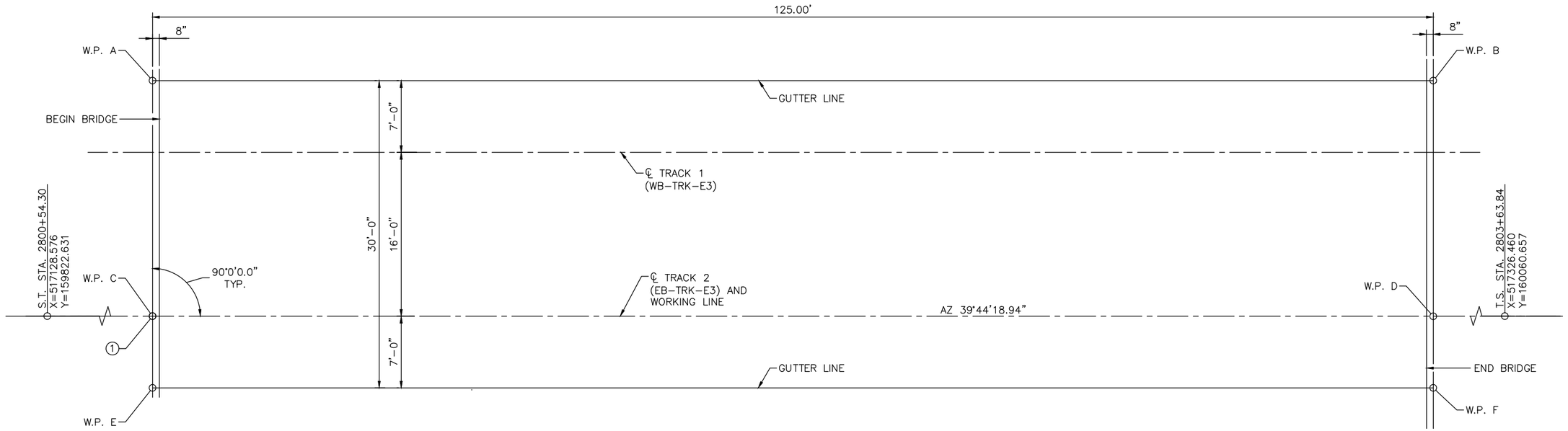

NOTES:

SUBSTRUCTURES SET PARALLEL AT
℄ =129°44'18.94"

(1) CONTROL POINT
℄ TRACK 2 (EB-TRK-E3)
STA 2801+78.25
X = 517207.817
Y = 159917.946

WORKING POINT LAYOUT

DIMENSIONS BETWEEN WORKING POINTS								COORDINATES		ELEVATIONS		
POINT	STATION	A	B	C	D	E	F	X	Y	TOP OF RAIL	TOP OF SLAB	POINT
A	2801+78.25		125.00	23.00	127.10		128.55	517190.131	159932.650		866.36	A
B	2803+03.25				23.00	128.55		517270.042	160028.771		867.83	B
C	2801+78.25				125.00	7.00	125.20	517207.817	159917.946	868.66	866.50	C
D	2803+03.25						7.00	517287.728	160014.067	870.13	867.97	D
E	2801+78.25						125.00	517213.200	159913.471		866.36	E
F	2803+03.25							517293.111	160009.592		867.83	F

NO.	DATE	BY	CHECK	DESIGN	REVISION / SUBMITTAL

DESIGNED BY: NRW | CHECKED BY: JSM
DRAWN BY: PGR | CHECKED BY: NRW

AECOM Kimley»Horn

90% SUBMISSION - 01/22/16

METROPOLITAN COUNCIL

SOUTHWEST Green Line LRT Extension

CIVIL - VOLUME 4F
CEDAR LAKE CHANNEL LRT BRIDGE
BRIDGE R0693
BRIDGE LAYOUT

DISCIPLINE: STRUCTURES
SHEET NAME: CBRR0693-BRG-LYT-001

SHEET 3 OF 39

Jan, 16 2016 10:08 am v:\3400_ADC\CAD\SEGMENT E3\PLAN SHEETS\STRUCTURES\R0693 CLCH-LRT\CBRR0693-BRG-LYT.dwg By: Nick.Williamson

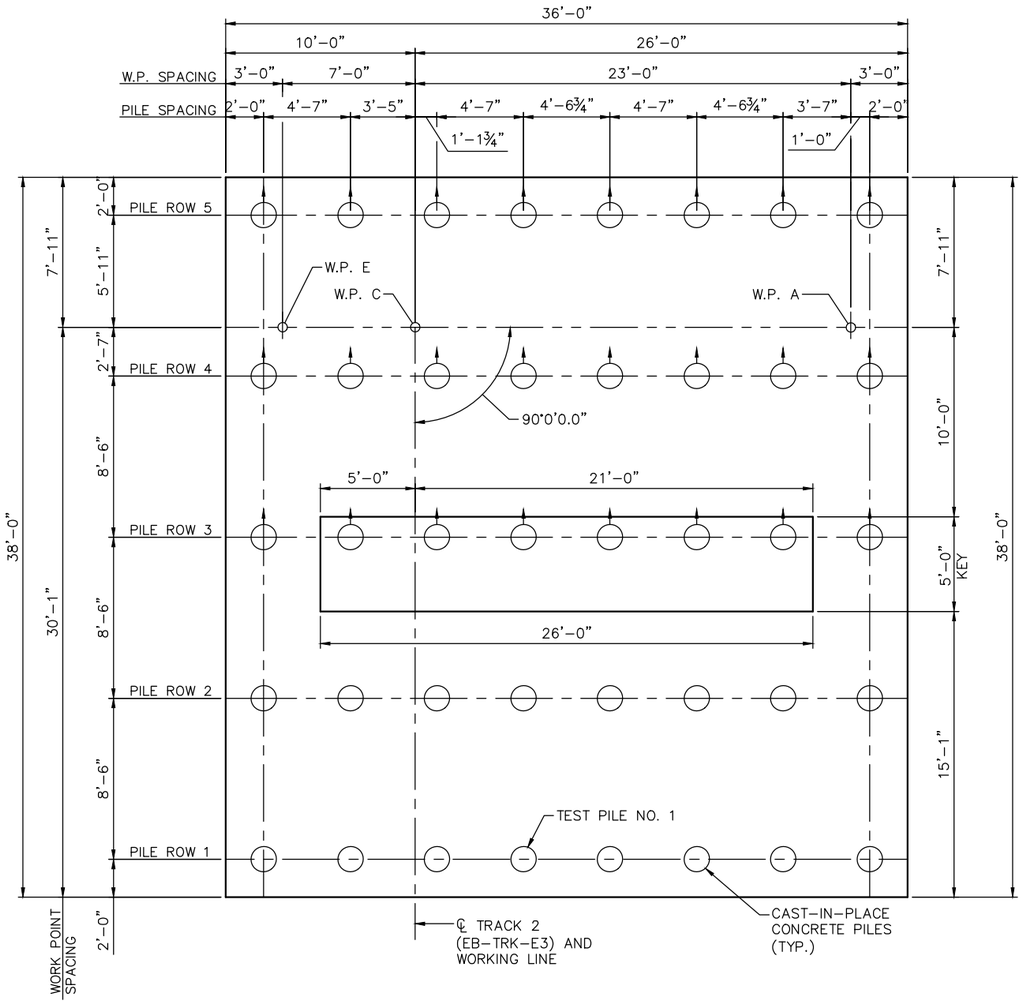

FOOTING PLAN

SOUTH ABUTMENT COMPUTED PILE LOAD - TONS/PILE	
FACTORED DEAD LOAD + EARTH PRESSURE	83
FACTORED LIVE LOAD	4
* FACTORED DESIGN LOAD	87

* BASED ON STRENGTH I LOAD COMBINATION.

SOUTH ABUTMENT REQUIRED NOMINAL PILE BEARING RESISTANCE FOR CIP PILES Rn - TONS/PILE		
FIELD CONTROL METHOD	φdyn	* Rn
PDA	0.65	134

* Rn = (FACTORED DESIGN LOAD) / φdyn

NOTE: ALL PILES SHALL BE DRIVEN TO EL. 801.0 AT A MINIMUM FOR LATERAL STABILITY.

GENERAL PILE NOTES

1 CAST-IN-PLACE CONCRETE TEST PILES 55 FT. LONG
39 CAST-IN-PLACE CONCRETE PILES EST. 45 FT. LENGTH
40 CAST-IN-PLACE CONCRETE PILES REQ'D FOR SOUTH ABUT.

PILE SPACING SHOWN IS AT BOTTOM OF FOOTING.

PILES TO HAVE A NOMINAL DIAMETER OF 16" AND ⅜" WALL THICKNESS.

PILES MARKED THUS ○ TO BE BATTERED 3" PER FOOT IN DIRECTION SHOWN.

FOR PILE SPLICE DETAILS SEE DETAIL B201.

NO.	DATE	BY	CHECK	DESIGN	REVISION / SUBMITTAL

DESIGNED BY: NRW | CHECKED BY: JSM
DRAWN BY: PGR | CHECKED BY: NRW

AECOM Kimley»Horn

90% SUBMISSION - 01/22/16

METROPOLITAN COUNCIL

SOUTHWEST Green Line LRT Extension

CIVIL - VOLUME 4F
CEDAR LAKE CHANNEL LRT BRIDGE
BRIDGE R0693
SOUTH ABUTMENT DETAILS 1

DISCIPLINE: STRUCTURES
SHEET NAME: CBRR0693-BRG-ABT-001

SHEET 4 OF 39

Jan, 16 2016 10:08 am V:\3400_ADC\CAD\SEGMENT E3\PLAN SHEETS\STRUCTURES\R0693 CLCH-LRT\CBRR0693-BRG-ABUT.dwg By: Nick.Williamson

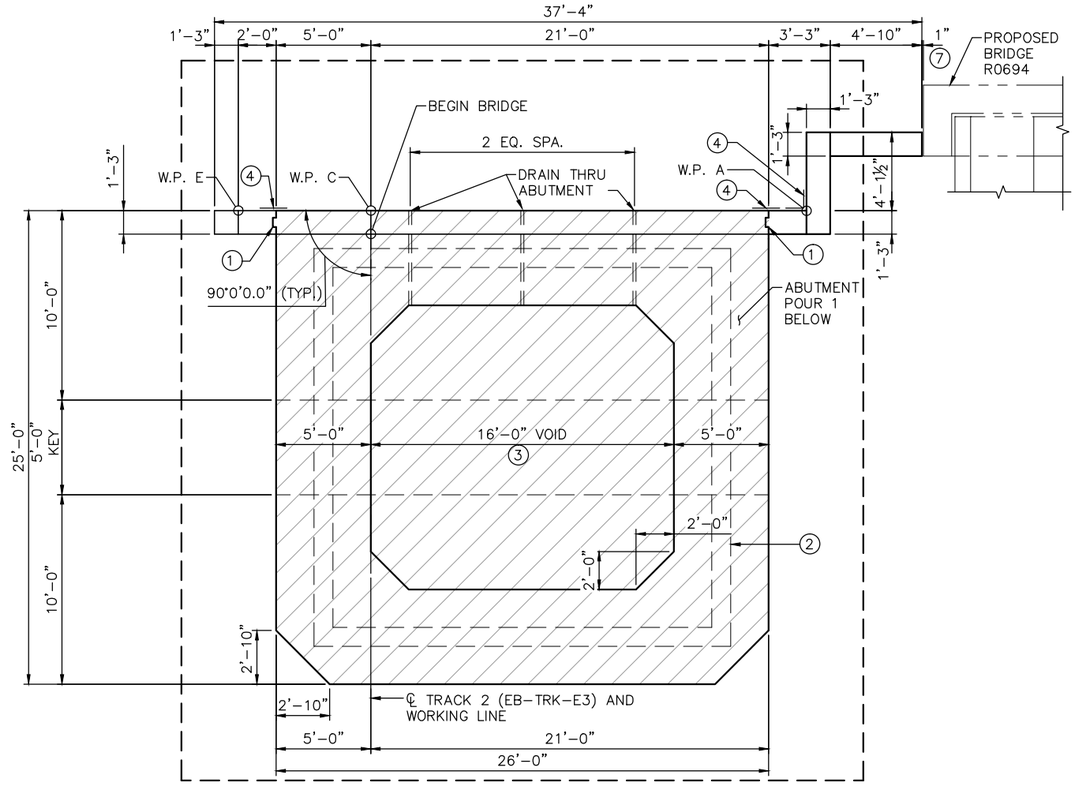

ABUTMENT PLAN

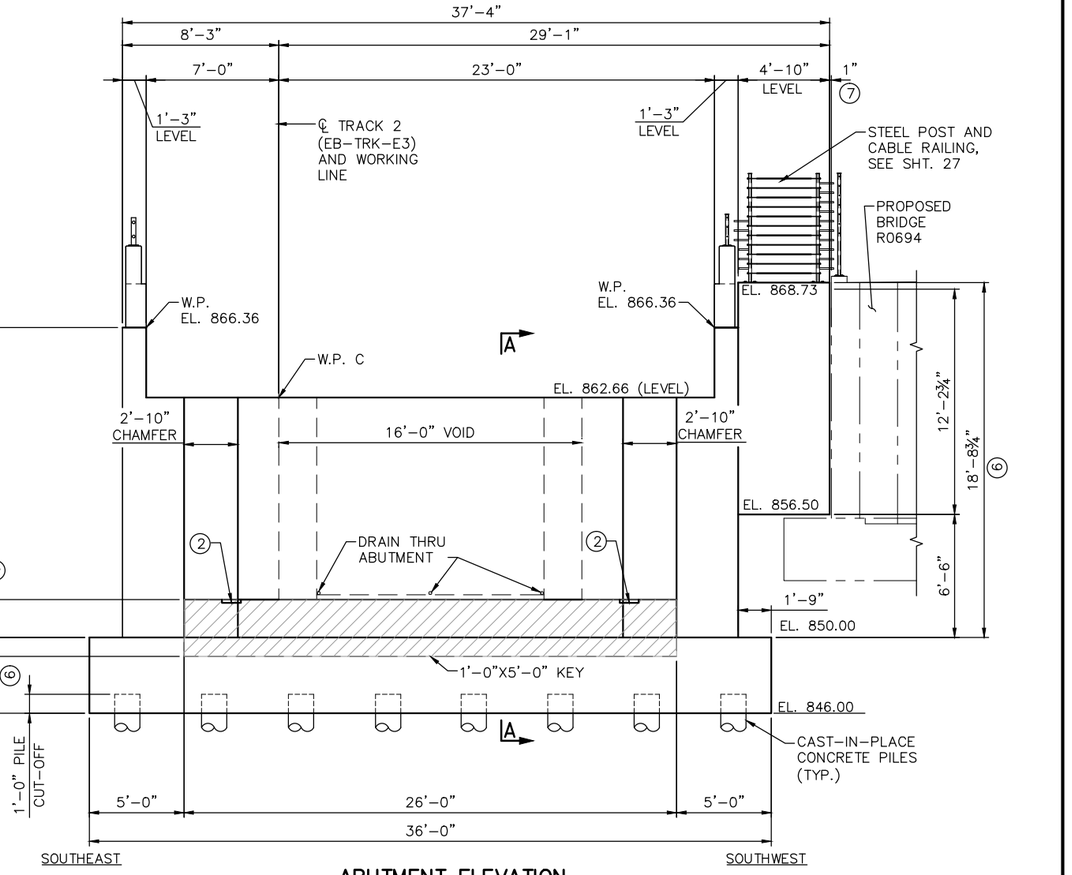

ABUTMENT ELEVATION

NOTES:

HATCHED AREA INDICATES ABUTMENT CONCRETE TO BE INCLUDED IN ABUTMENT POUR 1. ALL OTHER ABUTMENT CONCRETE TO BE INCLUDED IN ABUTMENT POUR 2.

72 HOUR TIME DELAY REQUIRED BETWEEN ADJACENT POURS TO ALLOW FOR SHRINKAGE.

SEE NEXT SHEET FOR SECTION A-A.

1. CONSTRUCTION JOINT WITH 2"X6" KEY
2. 2"X12" KEY BETWEEN ABUTMENT POURS 1 AND 2.
3. VOID TO BE FILLED WITH GRANULAR BACKFILL AFTER ABUTMENT HAS BEEN POURED AND PRIOR TO SUPERSTRUCTURE POUR.
4. MEMBRANE WATERPROOFING SYSTEM PER SPEC. 2481.3.B.
5. STRUCTURAL CONCRETE (1G52).
6. STRUCTURAL CONCRETE (3B52).
7. ELECTRICAL INSULATING CORK BARRIER. CONTRACTOR AND FIELD ENGINEER SHALL VERIFY WINGWALL CONCRETE IS SEPARATED AND CONDUCTIVE MATERIAL DOES NOT EXTEND THROUGH CORK

NO.	DATE	BY	CHECK	DESIGN	REVISION / SUBMITTAL

DESIGNED BY: NRW | CHECKED BY: JSM
DRAWN BY: PGR | CHECKED BY: NRW

AECOM Kimley»Horn

90% SUBMISSION - 01/22/16

METROPOLITAN COUNCIL

SOUTHWEST Green Line LRT Extension

CIVIL - VOLUME 4F
CEDAR LAKE CHANNEL LRT BRIDGE
BRIDGE R0693
SOUTH ABUTMENT DETAILS 2

DISCIPLINE: STRUCTURES

SHEET NAME: CBRR0693-BRG-ABT-002

SHEET 5 OF 39

Jan, 16 2016 10:08 am V:\3400_ADC\CAD\SEGMENT E3\PLAN SHEETS\STRUCTURES\R0693 CLCH-LRT\CBRR0693-BRG-ABUT.dwg By: Nick.Williamson

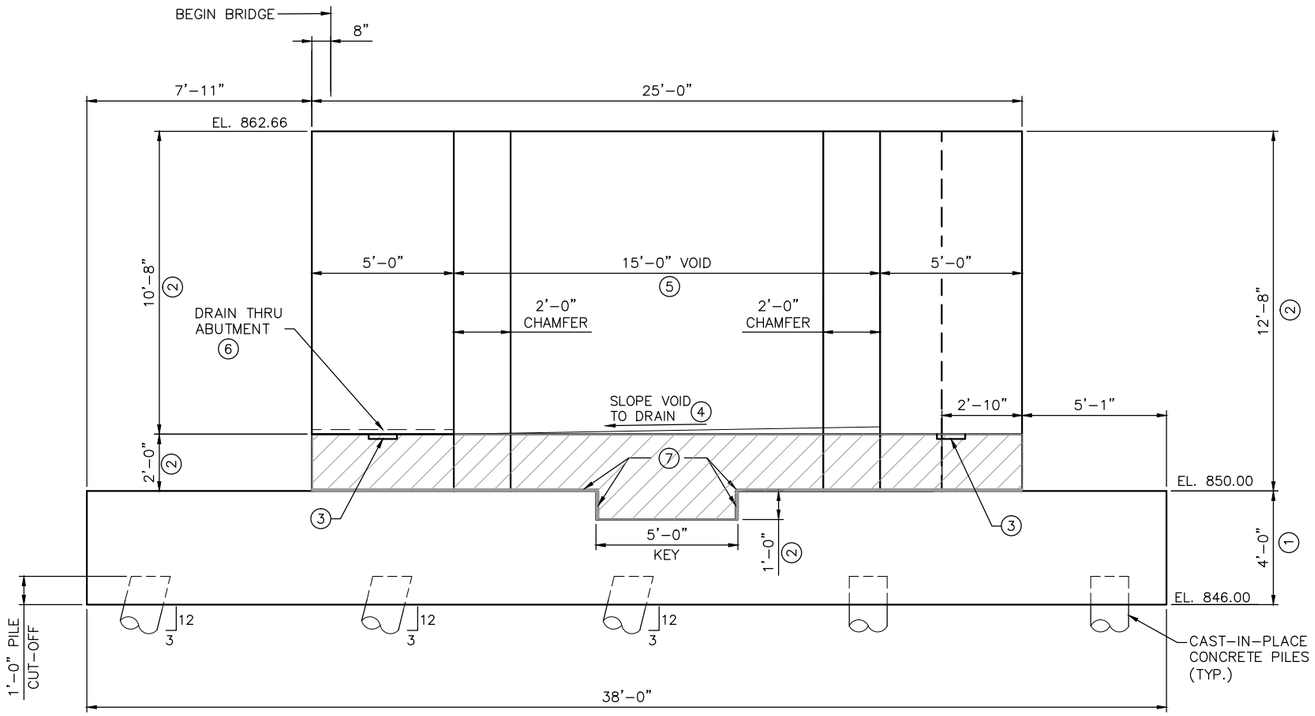

SECTION A–A

NOTES:

HATCHED AREA INDICATES ABUTMENT CONCRETE TO BE INCLUDED IN ABUTMENT POUR 1. ALL OTHER ABUTMENT CONCRETE TO BE INCLUDED IN ABUTMENT POUR 2.

1. STRUCTURAL CONCRETE (1G52).
2. STRUCTURAL CONCRETE (3B52).
3. 2"X12" KEY BETWEEN ABUTMENT POURS 1 AND 2.
4. GROUT THE TOP SURFACE OF ABUTMENT POUR 1 TO PROVIDE POSITIVE DRAINAGE TOWARDS DRAINS.
5. VOID TO BE FILLED WITH GRANULAR BACKFILL AFTER ABUTMENT HAS BEEN POURED AND PRIOR TO SUPERSTRUCTURE POUR.
6. DRAIN TO BE 2" DIA. PVC WITH FILTER FABRIC WRAPPED AROUND EACH END.
7. 1" PREFORMED JOINT FILLER PER MNDOT SPEC. 3702.

NO.	DATE	BY	CHECK	DESIGN	REVISION / SUBMITTAL

DESIGNED BY: NRW | CHECKED BY: JSM
DRAWN BY: PGR | CHECKED BY: NRW

AECOM Kimley»Horn

90% SUBMISSION - 01/22/16

METROPOLITAN COUNCIL

SOUTHWEST Green Line LRT Extension

CIVIL - VOLUME 4F
CEDAR LAKE CHANNEL LRT BRIDGE
BRIDGE R0693
SOUTH ABUTMENT DETAILS 3

DISCIPLINE: STRUCTURES
SHEET NAME: CBRR0693-BRG-ABT-003

SHEET 6 OF 39

Jan, 16 2016 10:08 am V:\3400_ADC\CAD\SEGMENT E3\PLAN SHEETS\STRUCTURES\R0693 CLCH-LRT\CBRR0693-BRG-ABUT.dwg By: Nick.Williamson

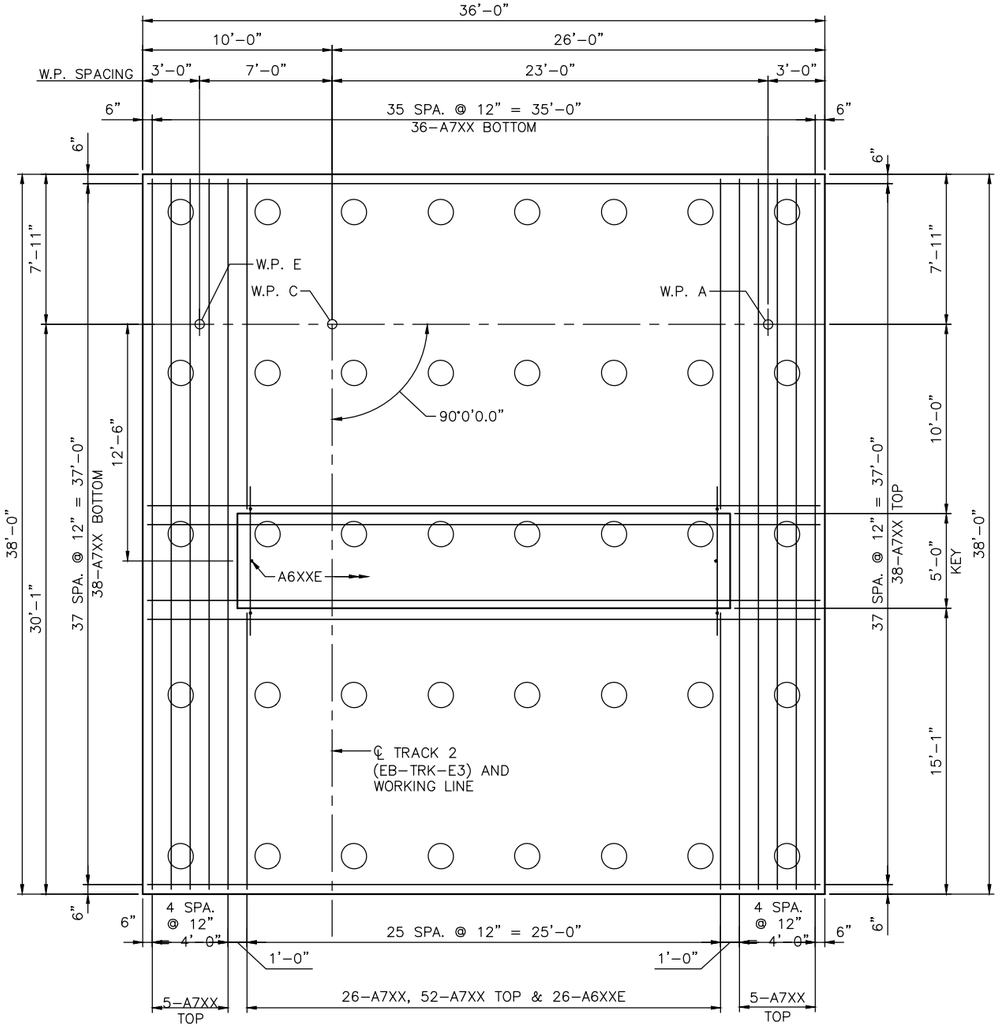

SOUTHEAST

FOOTING PLAN

SOUTHWEST

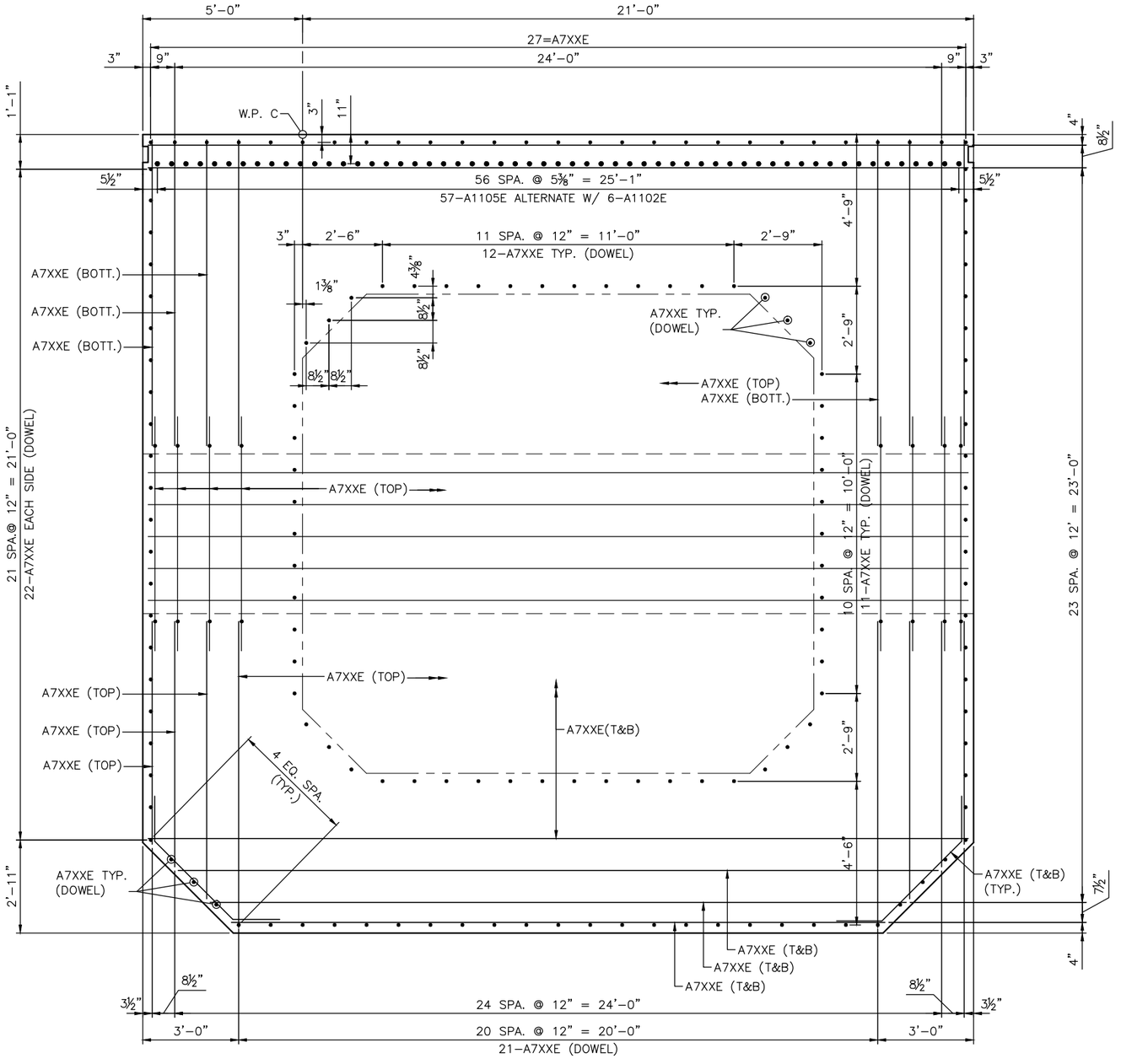

SOUTHEAST

ABUTMENT PLAN

SOUTHWEST

NO.	DATE	BY	CHECK	DESIGN	REVISION / SUBMITTAL

DESIGNED BY: NRW CHECKED BY: JSM
DRAWN BY: PGR CHECKED BY: JSM

AECOM Kimley»Horn

90% SUBMISSION - 01/22/16

METROPOLITAN COUNCIL

SOUTHWEST Green Line LRT Extension

CIVIL - VOLUME 4F
CEDAR LAKE CHANNEL LRT BRIDGE
BRIDGE R0693
SOUTH ABUTMENT REINFORCEMENT 1

DISCIPLINE: STRUCTURES

SHEET NAME: CBRR0693-BRG-ABT-004

SHEET 7 OF 39

Jan, 16 2016 10:08 am V:\3400_ADC\CAD\SEGMENT E3\PLAN SHEETS\STRUCTURES\R0693 CLCH-LRT\CBRR0693-BRG-ABUT.dwg By: Nick.Williamson

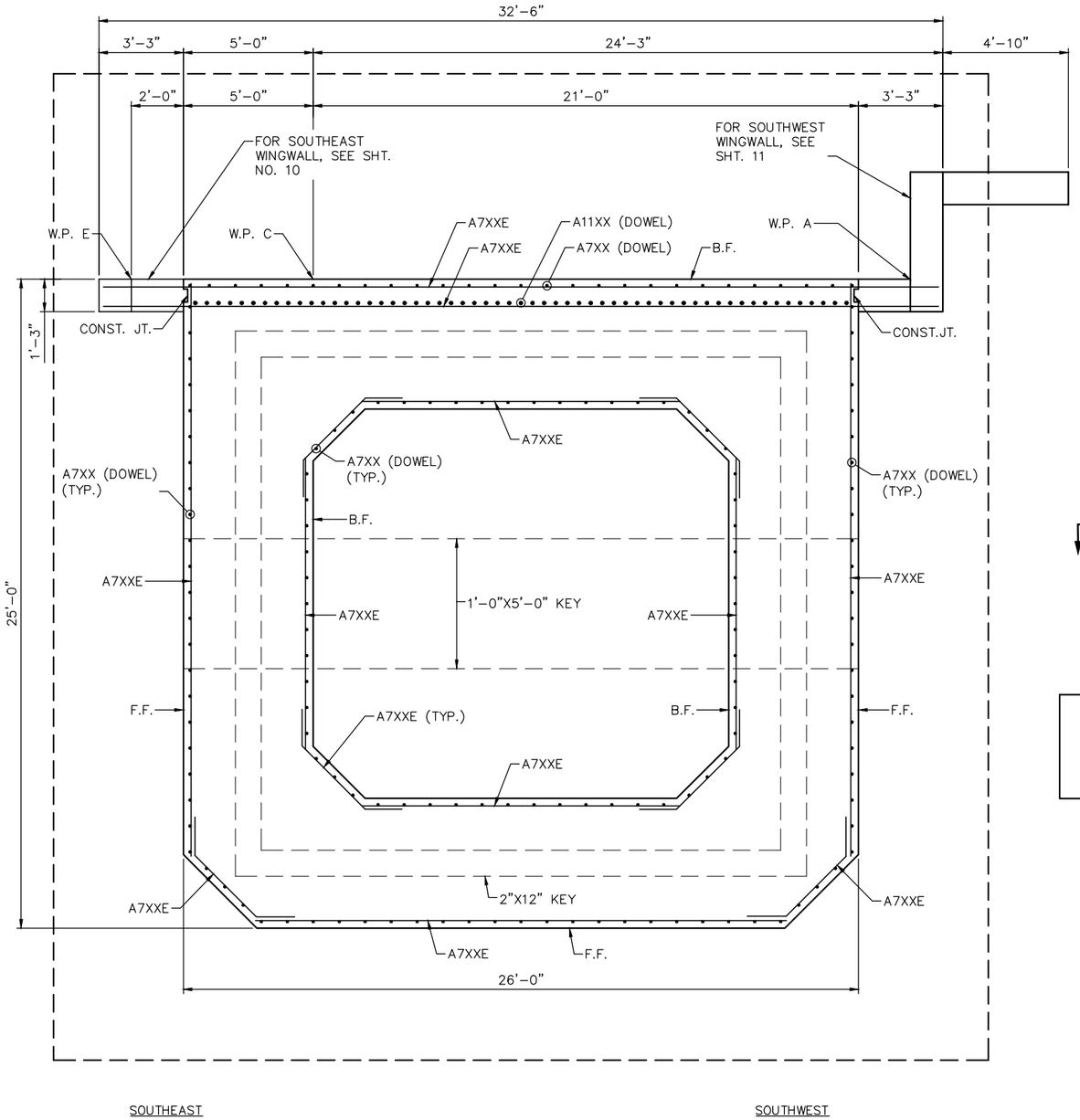

SOUTHEAST SOUTHWEST

SECTION B–B

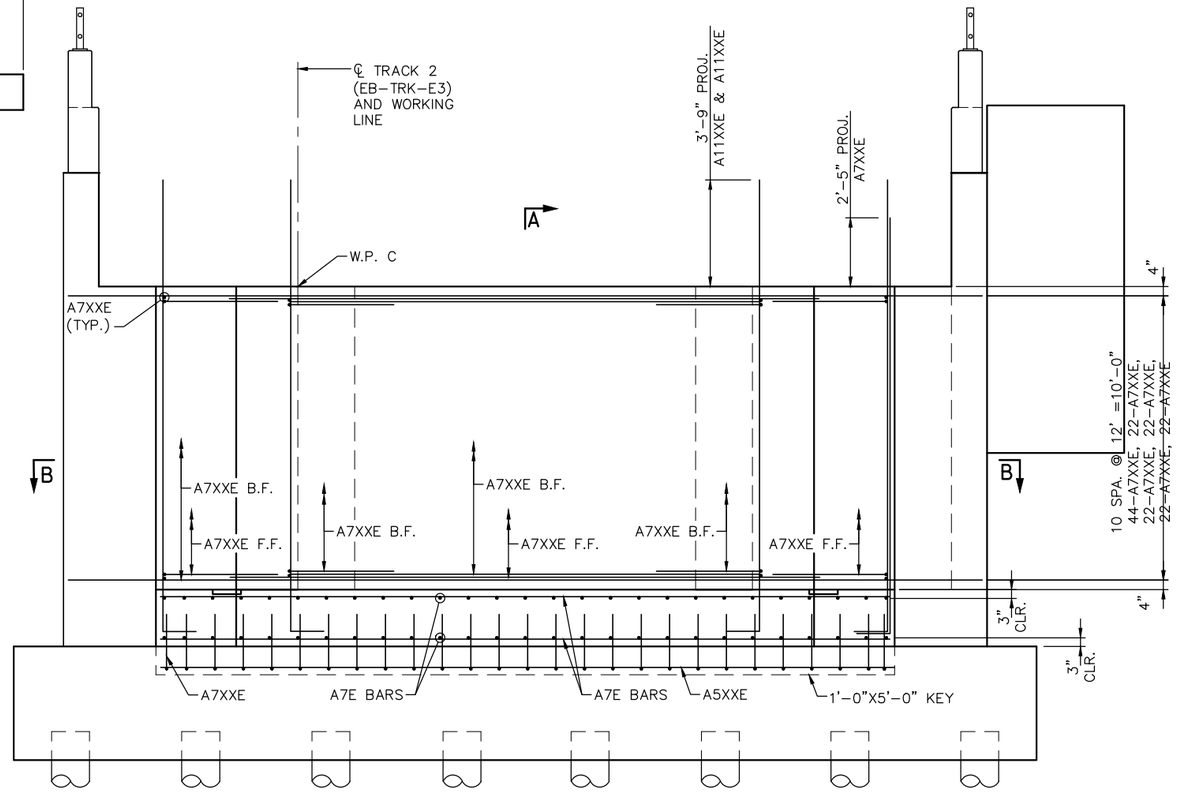

SOUTHEAST SOUTHWEST

ABUTMENT ELEVATION

NOTES:

FOR SECTION A–A SEE NEXT SHEET.

F.F. – DENOTES FRONT FACE

B.F. – DENOTES BACK FACE

E.F. – DENOTES EACH FACE

NO.	DATE	BY	CHECK	DESIGN	REVISION / SUBMITTAL

DESIGNED BY: NRW CHECKED BY: JSM

DRAWN BY: PGR CHECKED BY: JSM

AECOM Kimley»Horn

90% SUBMISSION - 01/22/16

METROPOLITAN COUNCIL

SOUTHWEST Green Line LRT Extension

CIVIL - VOLUME 4F
CEDAR LAKE CHANNEL LRT BRIDGE
BRIDGE R0693
SOUTH ABUTMENT REINFORCEMENT 2

DISCIPLINE: STRUCTURES

SHEET NAME: CBRR0693-BRG-ABT-005

SHEET 8 OF 39

Jan, 16 2016 10:09 am V:\3400_ADC\CAD\SEGMENT E3\PLAN SHEETS\STRUCTURES\R0693 CLCH-LRT\CBRR0693-BRG-ABUT.dwg By: Nick.Williamson

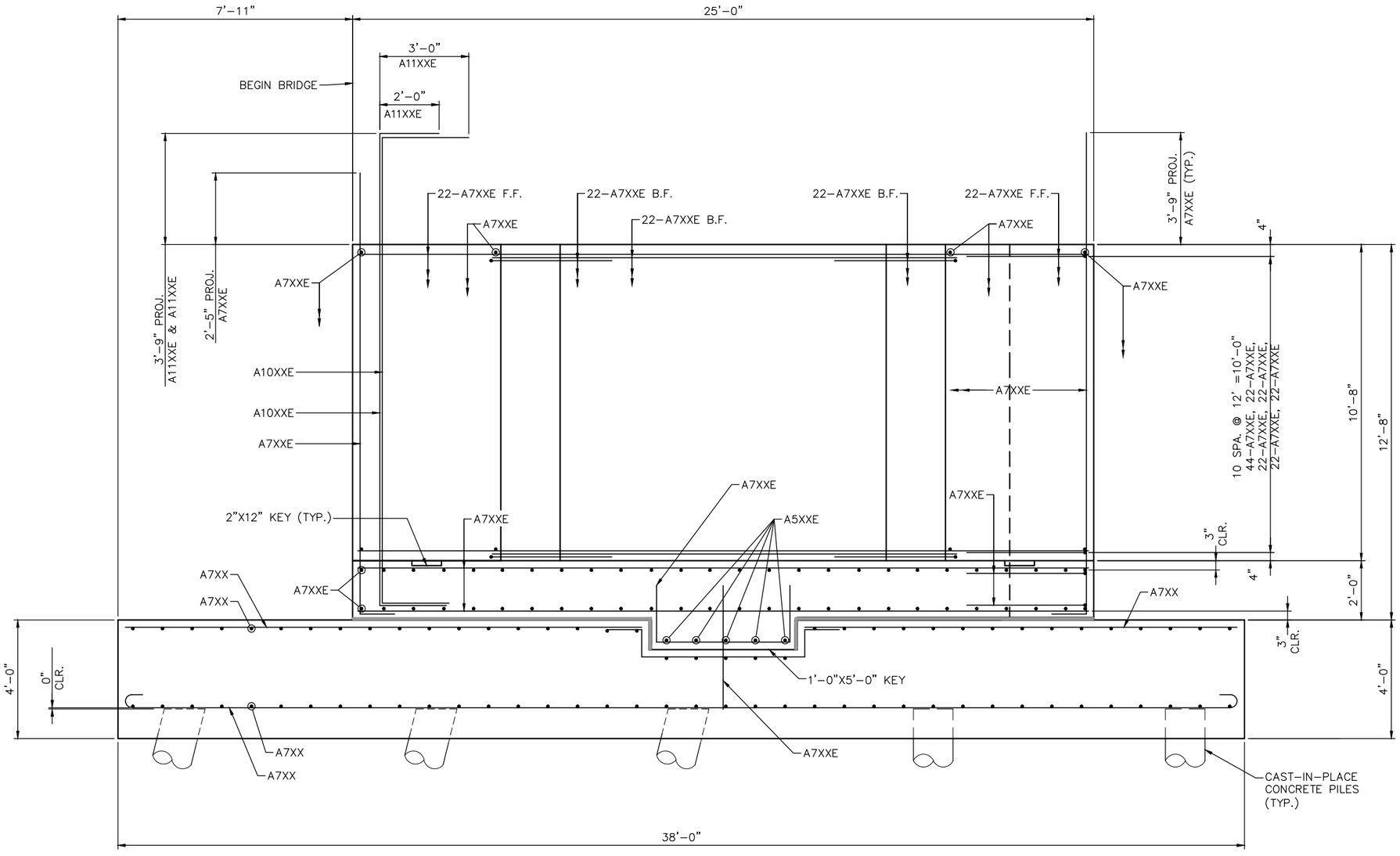

SECTION A–A

NOTES:

F.F. – DENOTES FRONT FACE

B.F. – DENOTES BACK FACE

E.F. – DENOTES EACH FACE

NO.	DATE	BY	CHECK	DESIGN	REVISION / SUBMITTAL

DESIGNED BY: NRW CHECKED BY: JSM

DRAWN BY: PGR CHECKED BY: JSM

AECOM Kimley»Horn

90% SUBMISSION - 01/22/16

METROPOLITAN COUNCIL

SOUTHWEST Green Line LRT Extension

CIVIL - VOLUME 4F
CEDAR LAKE CHANNEL LRT BRIDGE
BRIDGE R0693
SOUTH ABUTMENT REINFORCEMENT 3

DISCIPLINE: STRUCTURES

SHEET NAME: CBRR0693-BRG-ABT-006

SHEET 9 OF 39

Jan, 16 2016 10:09 am V:\3400_ADC\CAD\SEGMENT E3\PLAN SHEETS\STRUCTURES\R0693 CLCH-LRT\CBRR0693-BRG-ABUT.dwg By: Nick.Williamson

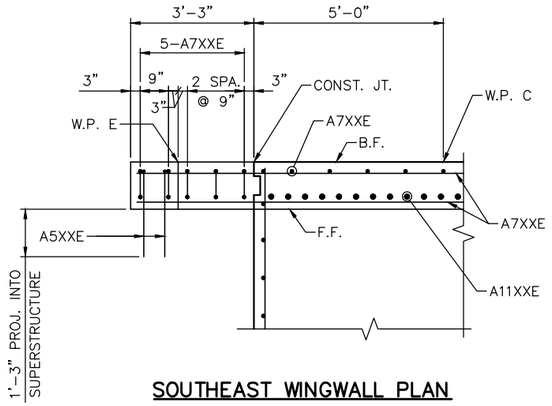

SOUTHEAST WINGWALL PLAN

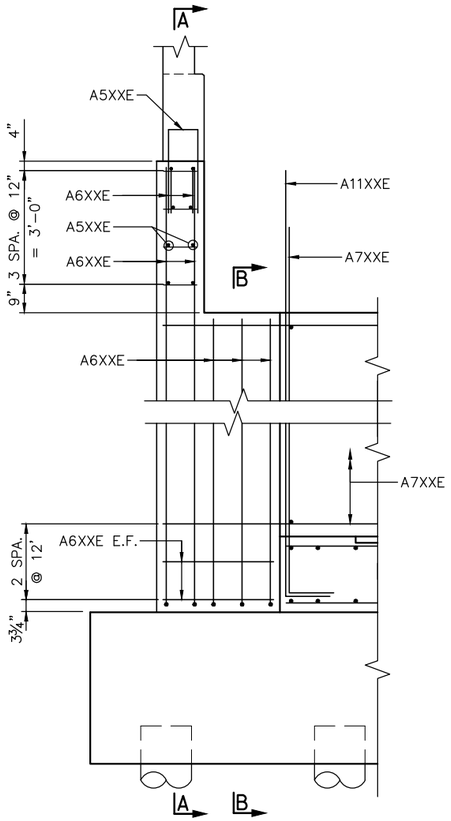

SOUTHEAST WINGWALL ELEVATION

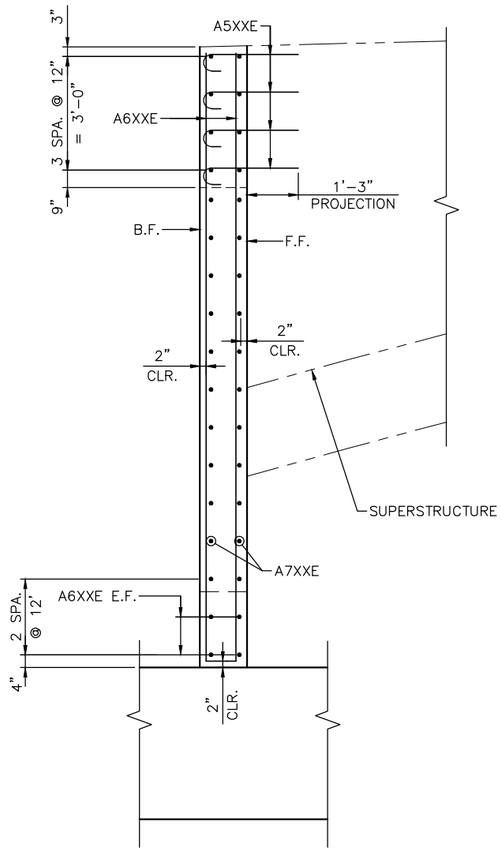

SECTION A–A

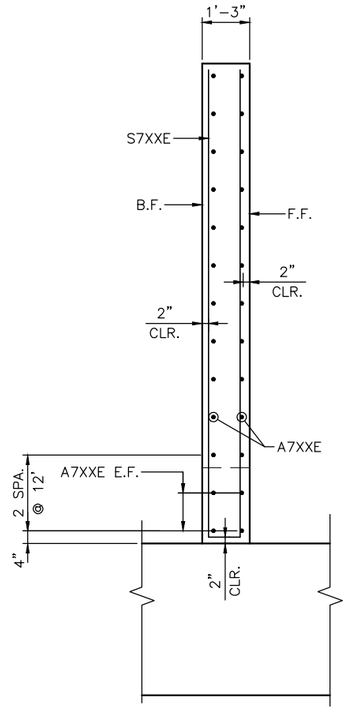

SECTION B–B

NOTES:

F.F. – DENOTES FRONT FACE

B.F. – DENOTES BACK FACE

E.F. – DENOTES EACH FACE

NO.	DATE	BY	CHECK	DESIGN	REVISION / SUBMITTAL

DESIGNED BY: NRW CHECKED BY: JSM

DRAWN BY: PGR CHECKED BY: JSM

AECOM Kimley»Horn

90% SUBMISSION - 01/22/16

METROPOLITAN COUNCIL

SOUTHWEST Green Line LRT Extension

CIVIL - VOLUME 4F
CEDAR LAKE CHANNEL LRT BRIDGE
BRIDGE R0693
SOUTH ABUTMENT REINFORCEMENT 4

DISCIPLINE: STRUCTURES

SHEET NAME: CBRR0693-BRG-ABT-007

SHEET 10 OF 39

Jan, 16 2016 10:09 am V:\3400_ADC\CAD\SEGMENT E3\PLAN SHEETS\STRUCTURES\R0693 CLCH-LRT\CBRR0693-BRG-

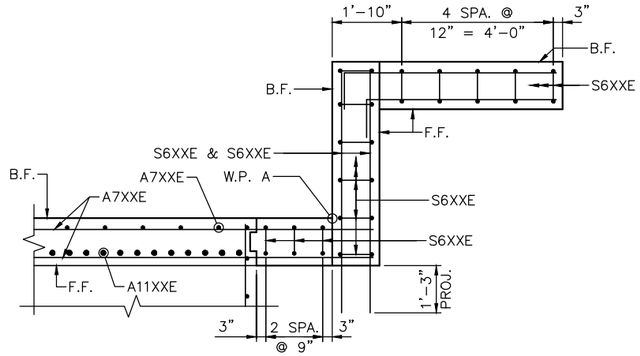

SOUTHWEST WINGWALL PLAN

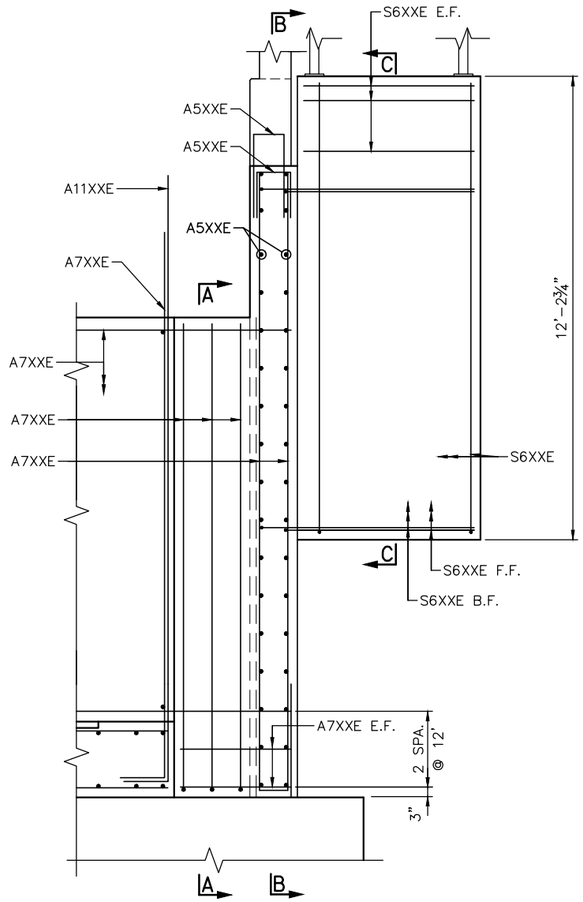

SOUTHWEST WINGWALL ELEVATION

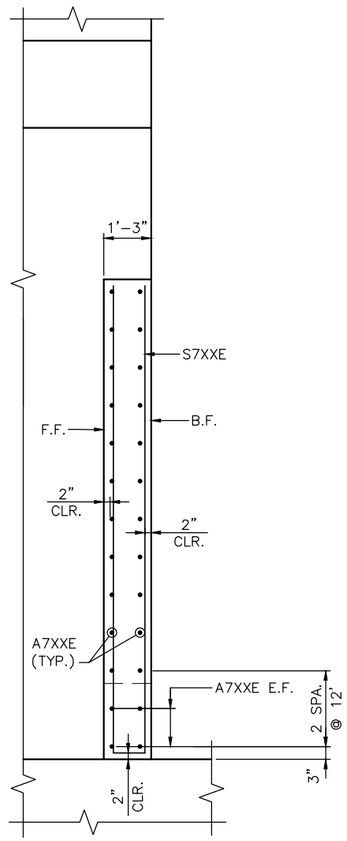

SECTION A-A

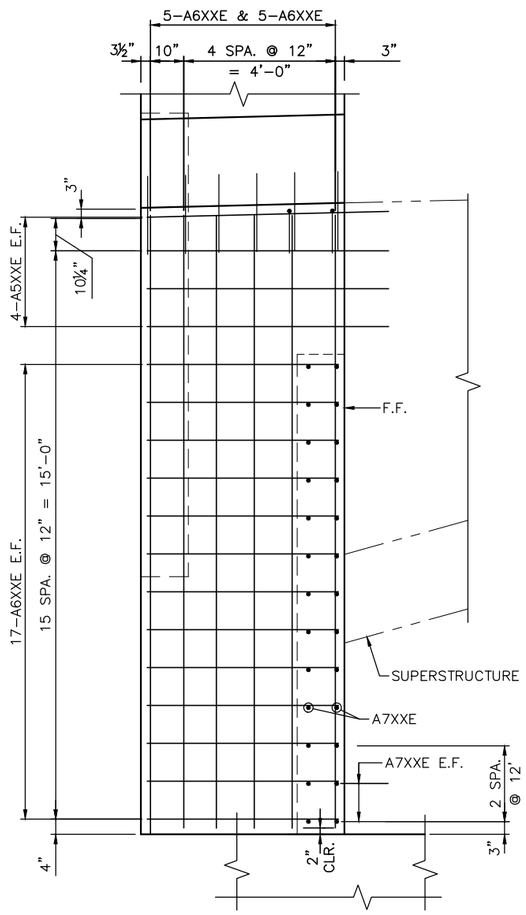

SECTION B-B

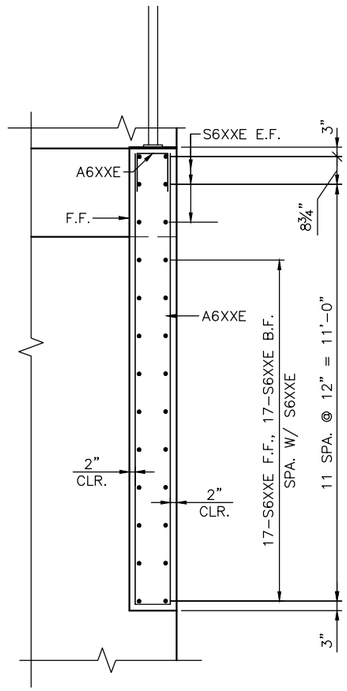

SECTION C-C

NOTES:

F.F. – DENOTES FRONT FACE

B.F. – DENOTES BACK FACE

E.F. – DENOTES EACH FACE

NO.	DATE	BY	CHECK	DESIGN	REVISION / SUBMITTAL

DESIGNED BY: NRW | CHECKED BY: JSM

DRAWN BY: PGR | CHECKED BY: JSM

AECOM Kimley»Horn

90% SUBMISSION - 01/22/16

METROPOLITAN COUNCIL

SOUTHWEST Green Line LRT Extension

CIVIL - VOLUME 4F
CEDAR LAKE CHANNEL LRT BRIDGE
BRIDGE R0693
SOUTH ABUTMENT REINFORCEMENT 5

DISCIPLINE: STRUCTURES

SHEET NAME: CBRR0693-BRG-ABT-008

SHEET 11 OF 39

Jan, 16 2016 10:09 am V:\3400_ADC\CAD\SEGMENT E3\PLAN SHEETS\STRUCTURES\R0693 CLCH-LRT\CBRR0693-BRG-ABUT.dwg By: Nick.Williamson

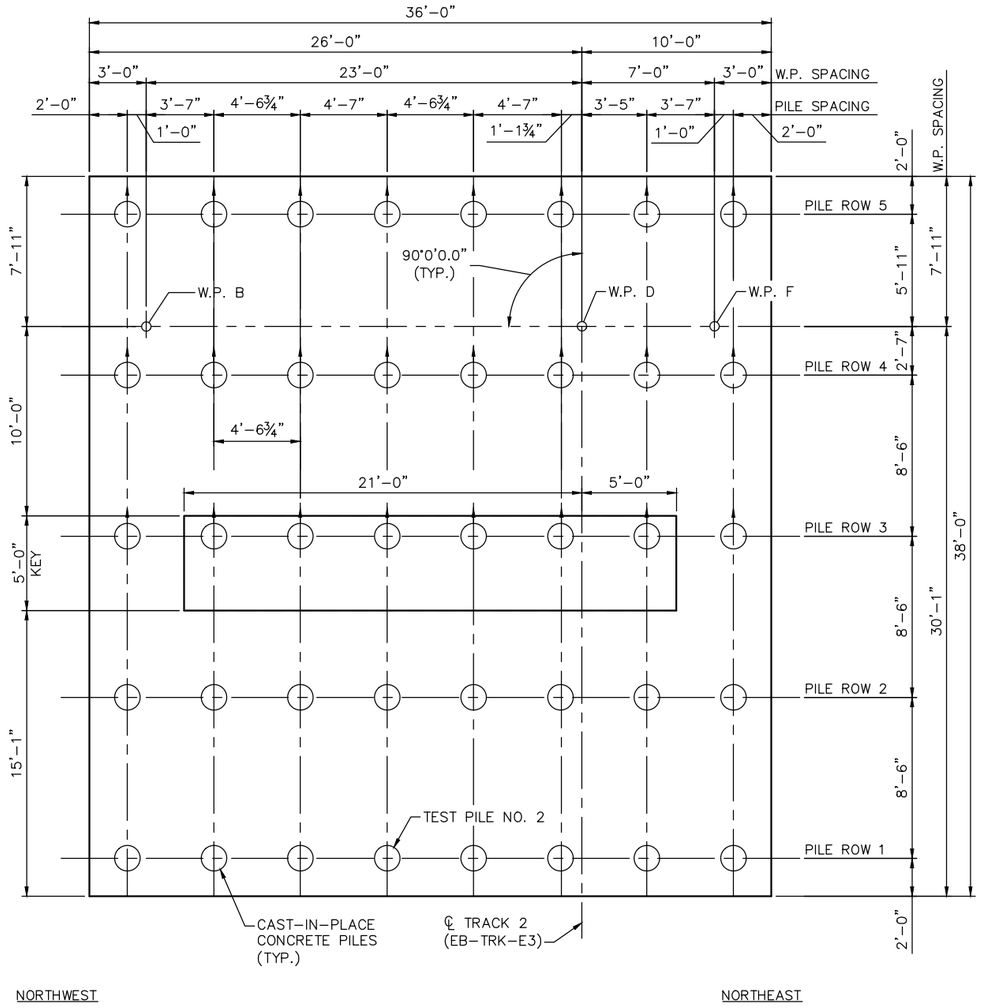

FOOTING PLAN

NORTH ABUTMENT COMPUTED PILE LOAD - TONS/PILE	
FACTORED DEAD LOAD + EARTH PRESSURE	89
FACTORED LIVE LOAD	4
* FACTORED DESIGN LOAD	93

* BASED ON STRENGTH I LOAD COMBINATION.

NORTH ABUTMENT REQUIRED NOMINAL PILE BEARING RESISTANCE FOR CIP PILES Rn - TONS/PILE		
FIELD CONTROL METHOD	φdyn	* Rn
PDA	0.65	143

* Rn = (FACTORED DESIGN LOAD) / φdyn

NOTE: ALL PILES SHALL BE DRIVEN TO EL. 796.0 AT A MINIMUM FOR LATERAL STABILITY.

GENERAL PILE NOTES

1 CAST–IN–PLACE CONCRETE TEST PILES 60 FT. LONG
39 CAST–IN–PLACE CONCRETE PILES EST. 50 FT. LENGTH
40 CAST–IN–PLACE CONCRETE PILES REQ'D FOR NORTH ABUT.

PILE SPACING SHOWN IS AT BOTTOM OF FOOTING.

PILES TO HAVE A NOMINAL DIAMETER OF 16" AND ⅜" WALL THICKNESS.

PILES MARKED THUS ○ TO BE BATTERED 3" PER FOOT IN DIRECTION SHOWN.

FOR PILE SPLICE DETAILS SEE DETAIL B201.

NO.	DATE	BY	CHECK	DESIGN	REVISION / SUBMITTAL

DESIGNED BY: NRW | CHECKED BY: JSM
DRAWN BY: PGR | CHECKED BY: NRW

AECOM Kimley»Horn

90% SUBMISSION - 01/22/16

METROPOLITAN COUNCIL

SOUTHWEST Green Line LRT Extension

CIVIL - VOLUME 4F
CEDAR LAKE CHANNEL LRT BRIDGE
BRIDGE R0693
NORTH ABUTMENT DETAILS 1

DISCIPLINE: STRUCTURES
SHEET NAME: CBRR0693-BRG-ABT-009

SHEET 12 OF 39

Jan, 16 2016 10:09 am V:\3400_ADC\CAD\SEGMENT E3\PLAN SHEETS\STRUCTURES\R0693 CLCH-LRT\CBRR0693-BRG-ABUT.dwg By: Nick.Williamson

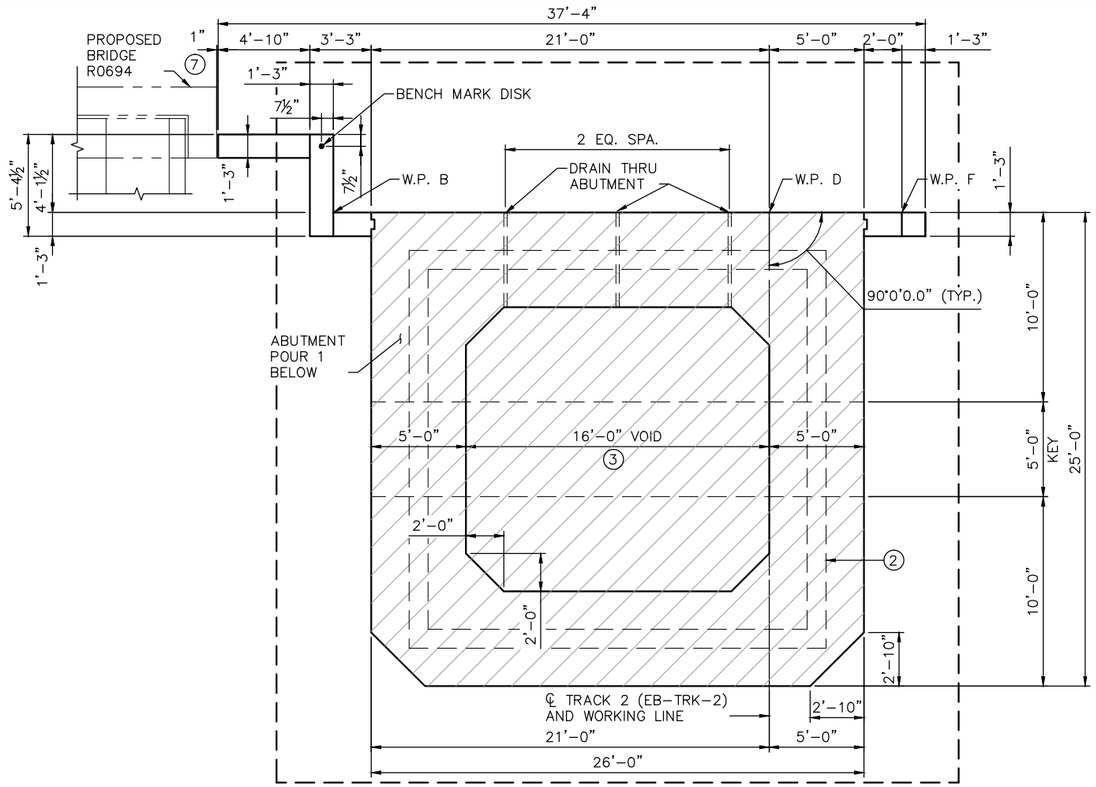

NORTHWEST

ABUTMENT PLAN

NORTHEAST

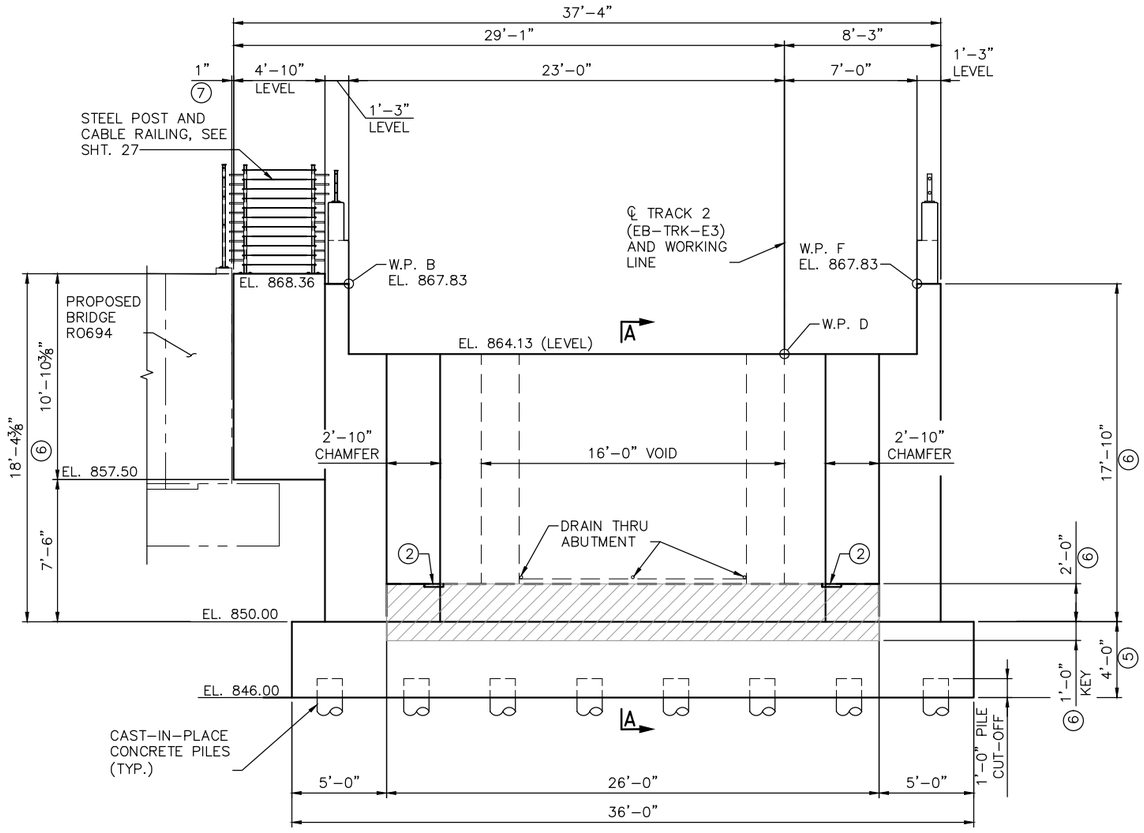

ABUTMENT ELEVATION

NOTES:

HATCHED AREA INDICATES ABUTMENT CONCRETE TO BE INCLUDED IN ABUTMENT POUR 1. ALL OTHER ABUTMENT CONCRETE TO BE INCLUDED IN ABUTMENT POUR 2.

72 HOUR TIME DELAY REQUIRED BETWEEN ADJACENT POURS TO ALLOW FOR SHRINKAGE.

SEE NEXT SHEET FOR SECTION A-A.

1. CONSTRUCTION JOINT WITH 2"X6" KEY
2. 2"X12" KEY BETWEEN ABUTMENT POURS 1 AND 2.
3. VOID TO BE FILLED WITH GRANULAR BACKFILL AFTER ABUTMENT HAS BEEN POURED AND PRIOR TO SUPERSTRUCTURE POUR.
4. MEMBRANE WATERPROOFING SYSTEM PER SPEC. 2481.3.B.
5. STRUCTURAL CONCRETE (1G52).
6. STRUCTURAL CONCRETE (3B52).
7. ELECTRICAL INSULATING CORK BARRIER. CONTRACTOR AND FIELD ENGINEER SHALL VERIFY WINGWALL CONCRETE IS SEPARATED AND CONDUCTIVE MATERIAL DOES NOT EXTEND THROUGH CORK

NO.	DATE	BY	CHECK	DESIGN	REVISION / SUBMITTAL

DESIGNED BY: NRW | CHECKED BY: JSM
DRAWN BY: PGR | CHECKED BY: NRW

AECOM Kimley»Horn

90% SUBMISSION - 01/22/16

METROPOLITAN COUNCIL

SOUTHWEST Green Line LRT Extension

CIVIL - VOLUME 4F
CEDAR LAKE CHANNEL LRT BRIDGE
BRIDGE R0693
NORTH ABUTMENT DETAILS 2

DISCIPLINE: STRUCTURES
SHEET NAME: CBRR0693-BRG-ABT-010

SHEET 13 OF 39

Jan, 16 2016 10:09 am V:\3400_ADC\CAD\SEGMENT E3\PLAN SHEETS\STRUCTURES\R0693 CLCH-LRT\CBRR0693-BRG-ABUT.dwg By: Nick.Williamson

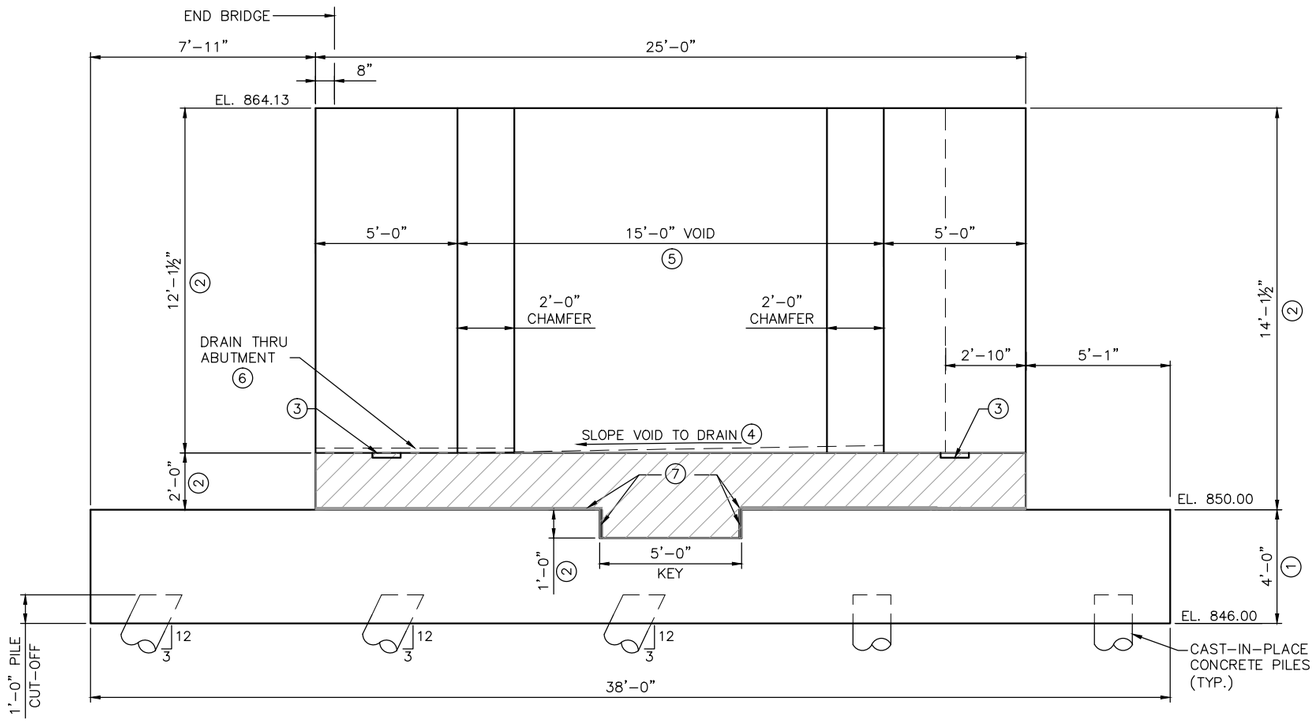

SECTION A-A

NOTES:

HATCHED AREA INDICATES ABUTMENT CONCRETE TO BE INCLUDED IN ABUTMENT POUR 1. ALL OTHER ABUTMENT CONCRETE TO BE INCLUDED IN ABUTMENT POUR 2.

(1) STRUCTURAL CONCRETE (1G52).

(2) STRUCTURAL CONCRETE (3B52).

(3) 2"X12" KEY BETWEEN ABUTMENT POURS 1 AND 2.

(4) GROUT THE TOP SURFACE OF ABUTMENT POUR 1 TO PROVIDE POSITIVE DRAINAGE TOWARDS DRAINS.

(5) VOID TO BE FILLED WITH GRANULAR BACKFILL AFTER ABUTMENT HAS BEEN POURED AND PRIOR TO SUPERSTRUCTURE POUR.

(6) DRAIN TO BE 2" DIA. PVC WITH FILTER FABRIC WRAPPED AROUND EACH END.

(7) 1" PREFORMED JOINT FILLER PER MNDOT SPEC. 3702.

NO.	DATE	BY	CHECK	DESIGN	REVISION / SUBMITTAL

DESIGNED BY: NRW | CHECKED BY: JSM
DRAWN BY: PGR | CHECKED BY: NRW

AECOM Kimley»Horn

90% SUBMISSION - 01/22/16

METROPOLITAN COUNCIL

SOUTHWEST Green Line LRT Extension

CIVIL - VOLUME 4F
CEDAR LAKE CHANNEL LRT BRIDGE
BRIDGE R0693
NORTH ABUTMENT DETAILS 3

DISCIPLINE: STRUCTURES
SHEET NAME: CBRR0693-BRG-ABT-011

SHEET 14 OF 39

Jan, 16 2016 10:09 am V:\3400_ADC\CAD\SEGMENT E3\PLAN SHEETS\STRUCTURES\R0693 CLCH-LRT\CBRR0693-BRG-ABUT.dwg By: Nick.Williamson

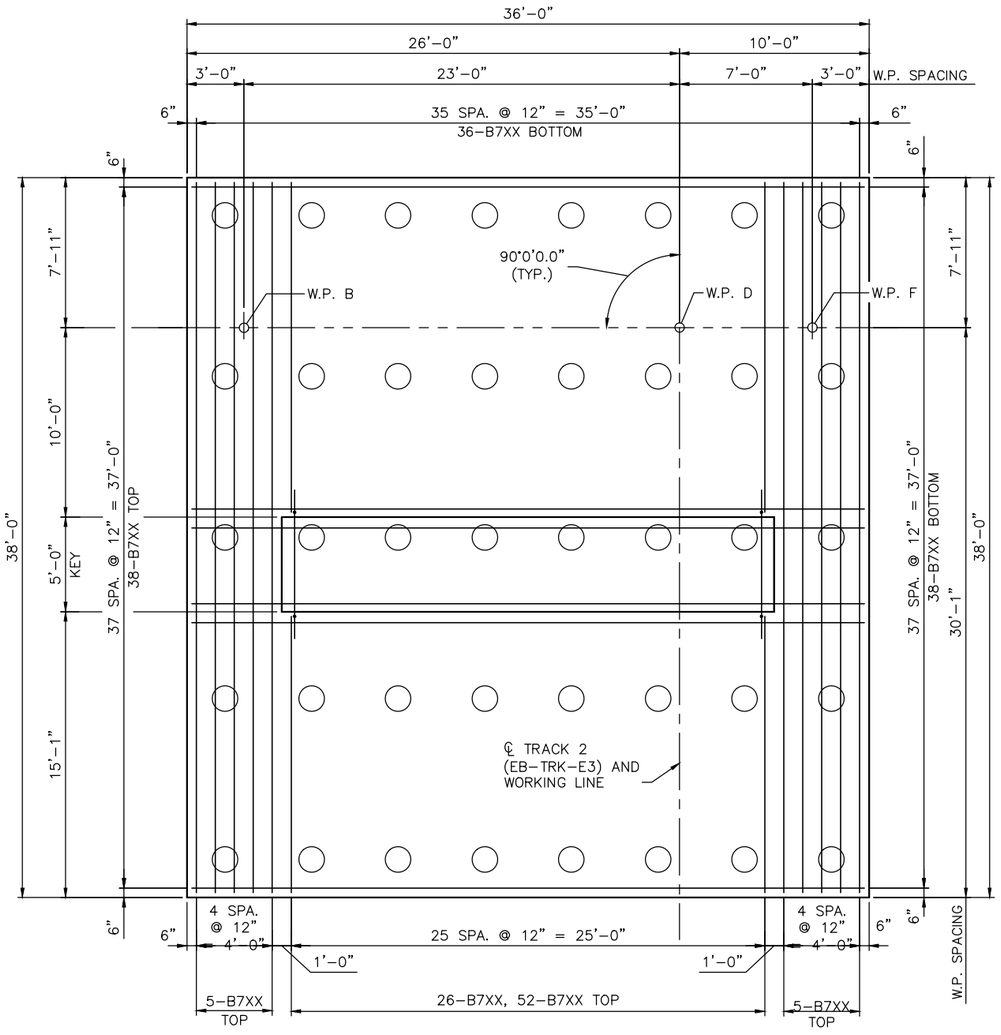

FOOTING PLAN

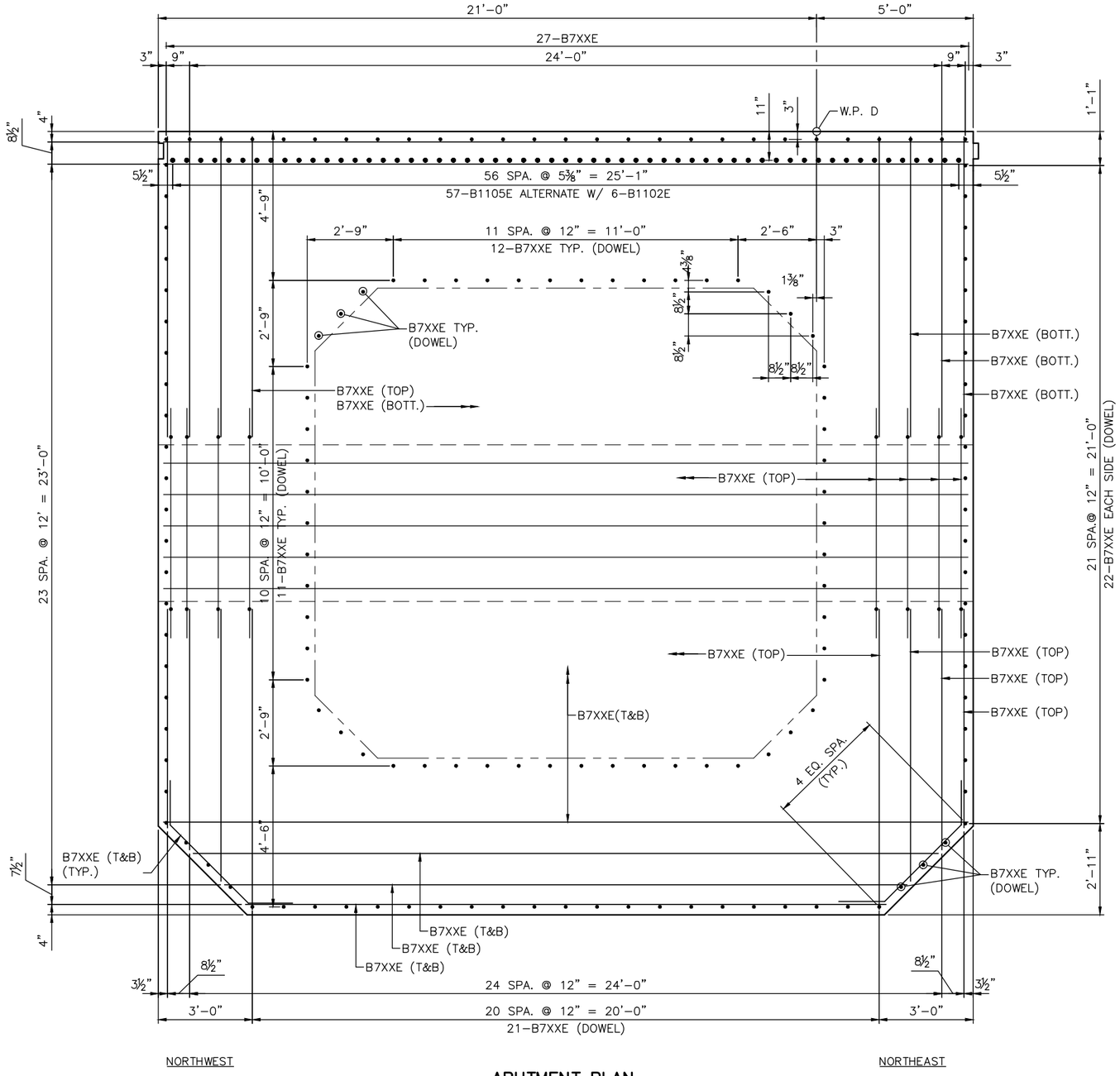

ABUTMENT PLAN

NO.	DATE	BY	CHECK	DESIGN	REVISION / SUBMITTAL

DESIGNED BY: NRW | CHECKED BY: JSM
DRAWN BY: PGR | CHECKED BY: JSM

AECOM Kimley»Horn

90% SUBMISSION - 01/22/16

METROPOLITAN COUNCIL

SOUTHWEST Green Line LRT Extension

CIVIL - VOLUME 4F
CEDAR LAKE CHANNEL LRT BRIDGE
BRIDGE R0693
NORTH ABUTMENT REINFORCEMENT 1

DISCIPLINE: STRUCTURES

SHEET NAME: CBRR0693-BRG-ABT-012

SHEET 15 OF 39

Jan, 16 2016 10:09 am V:\3400_ADC\CAD\SEGMENT E3\PLAN SHEETS\STRUCTURES\R0693 CLCH-LRT\CBRR0693-BRG-ABUT.dwg By: Nick.Williamson

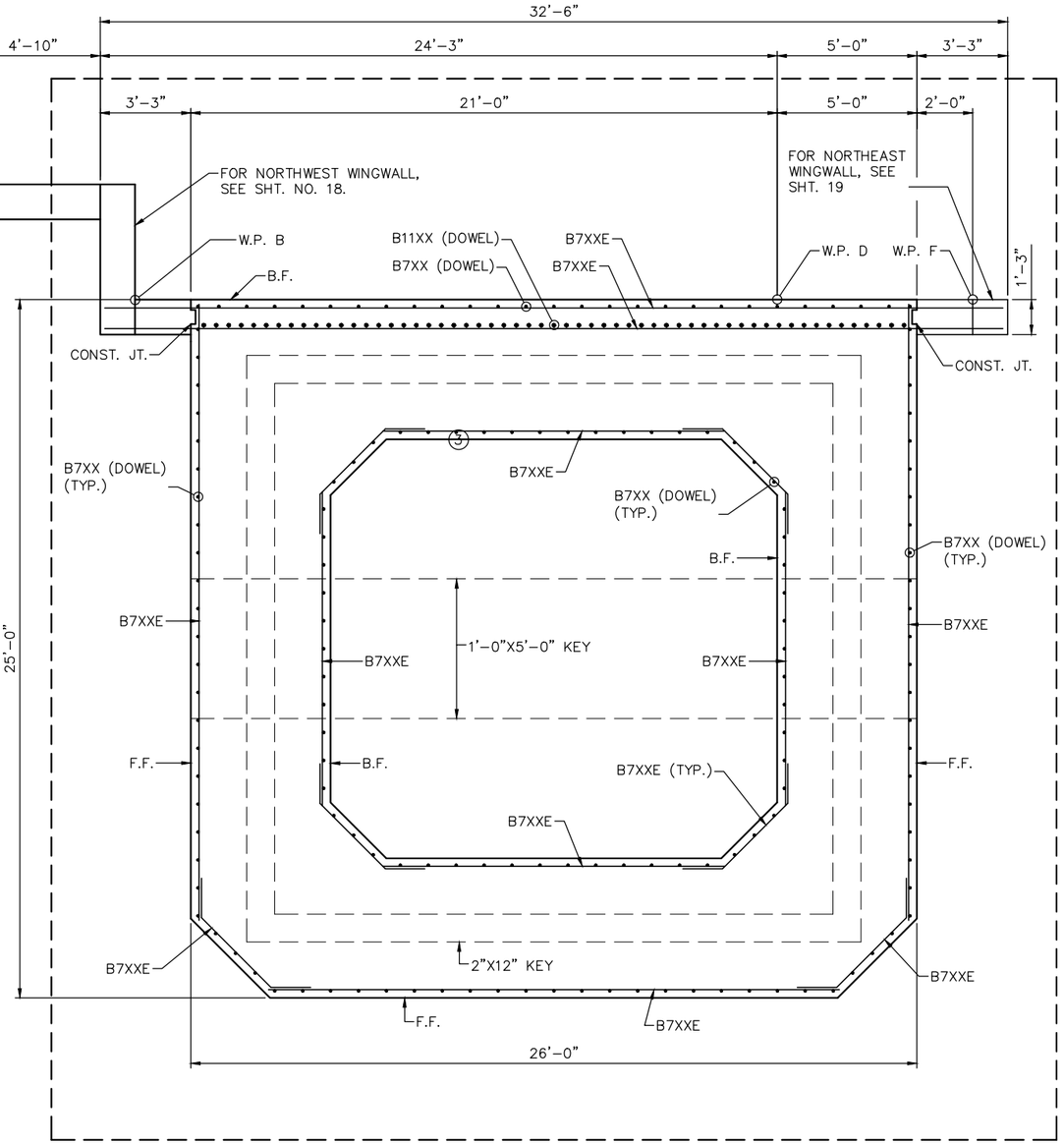

NORTHWEST

SECTION B–B

NORTHEAST

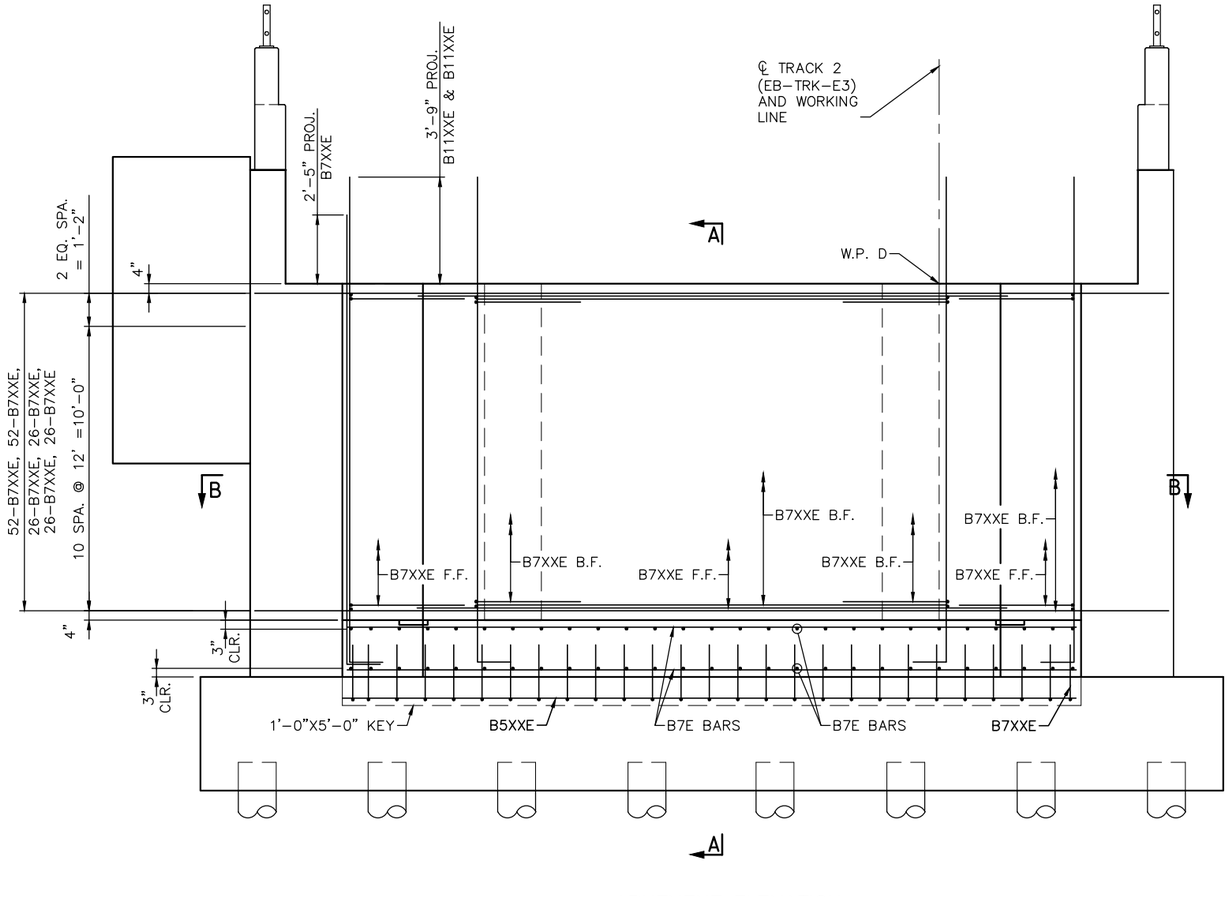

ABUTMENT ELEVATION

NOTES:

FOR SECTION A–A SEE NEXT SHEET.

F.F. – DENOTES FRONT FACE

B.F. – DENOTES BACK FACE

E.F. – DENOTES EACH FACE

NO.	DATE	BY	CHECK	DESIGN	REVISION / SUBMITTAL

DESIGNED BY: NRW | CHECKED BY: JSM

DRAWN BY: PGR | CHECKED BY: JSM

AECOM Kimley»Horn

90% SUBMISSION - 01/22/16

METROPOLITAN COUNCIL

SOUTHWEST Green Line LRT Extension

CIVIL - VOLUME 4F
CEDAR LAKE CHANNEL LRT BRIDGE
BRIDGE R0693
NORTH ABUTMENT REINFORCEMENT 2

DISCIPLINE: STRUCTURES

SHEET NAME: CBRR0693-BRG-ABT-013

SHEET 16 OF 39

Jan, 16 2016 10:09 am V:\3400_ADC\CAD\SEGMENT E3\PLAN SHEETS\STRUCTURES\R0693 CLCH-LRT\CBRR0693-BRG-ABUT.dwg By: Nick.Williamson

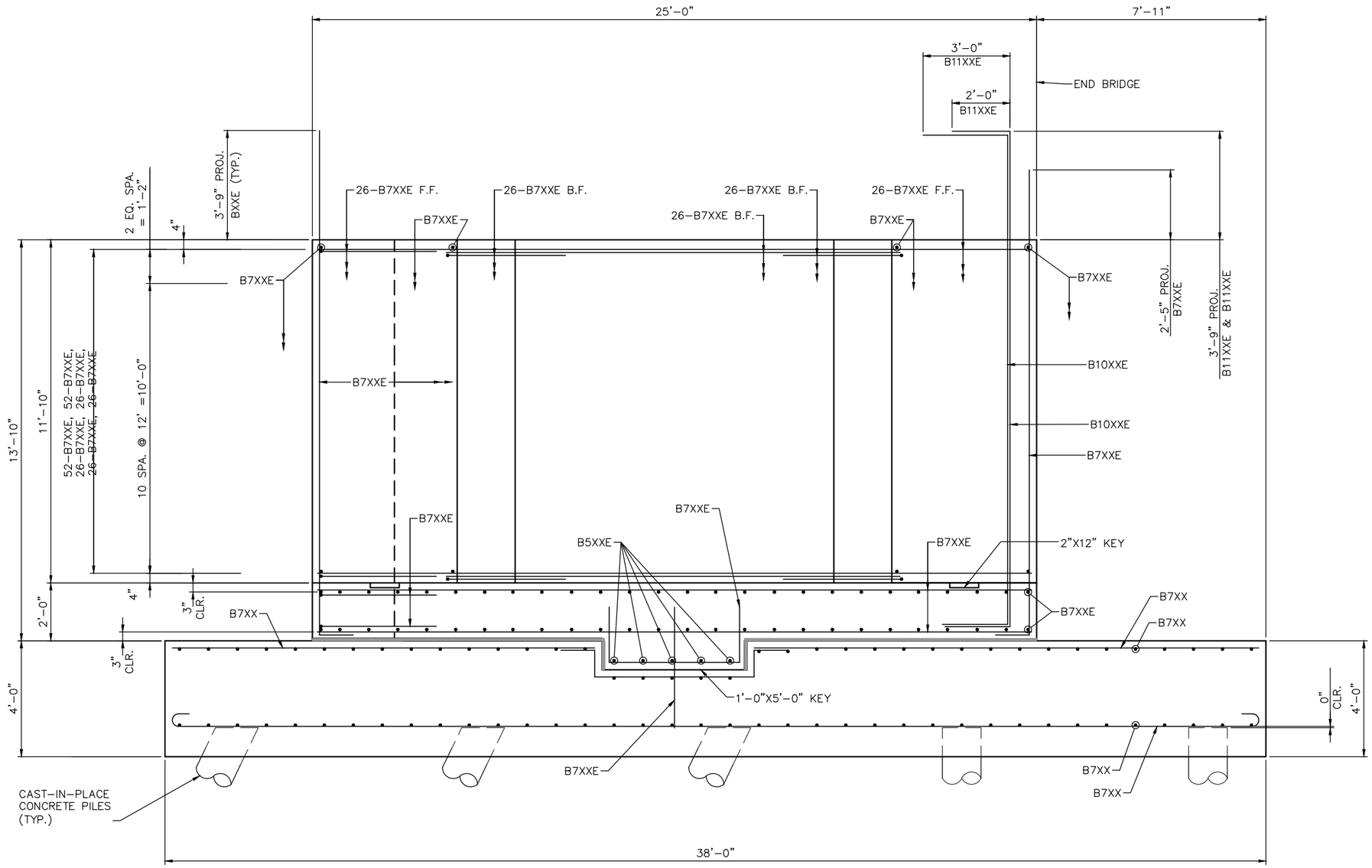

SECTION A-A

NO.	DATE	BY	CHECK	DESIGN	REVISION / SUBMITTAL

DESIGNED BY: NRW CHECKED BY: JSM
DRAWN BY: PGR CHECKED BY: JSM

AECOM Kimley»Horn

90% SUBMISSION - 01/22/16

METROPOLITAN COUNCIL

SOUTHWEST Green Line LRT Extension

CIVIL - VOLUME 4F
CEDAR LAKE CHANNEL LRT BRIDGE
BRIDGE R0693
NORTH ABUTMENT REINFORCEMENT 3

DISCIPLINE: STRUCTURES

SHEET NAME: CBRR0693-BRG-ABT-014

SHEET 17 OF 39

Jan, 16 2016 10:09 am V:\3400_ADC\CAD\SEGMENT E3\PLAN SHEETS\STRUCTURES\R0693 CLCH-LRT\CBRR0693-BRG-ABUT.dwg By: Nick.Williamson

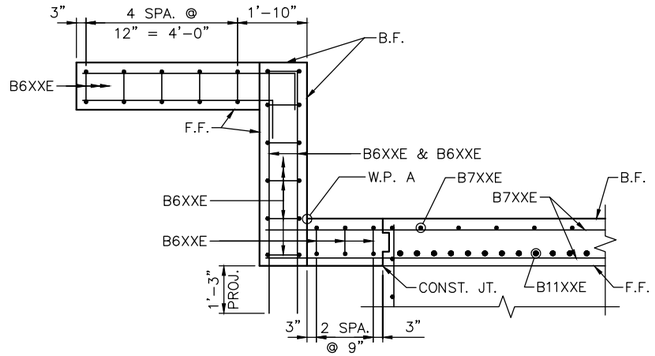

NORTHWEST WINGWALL PLAN

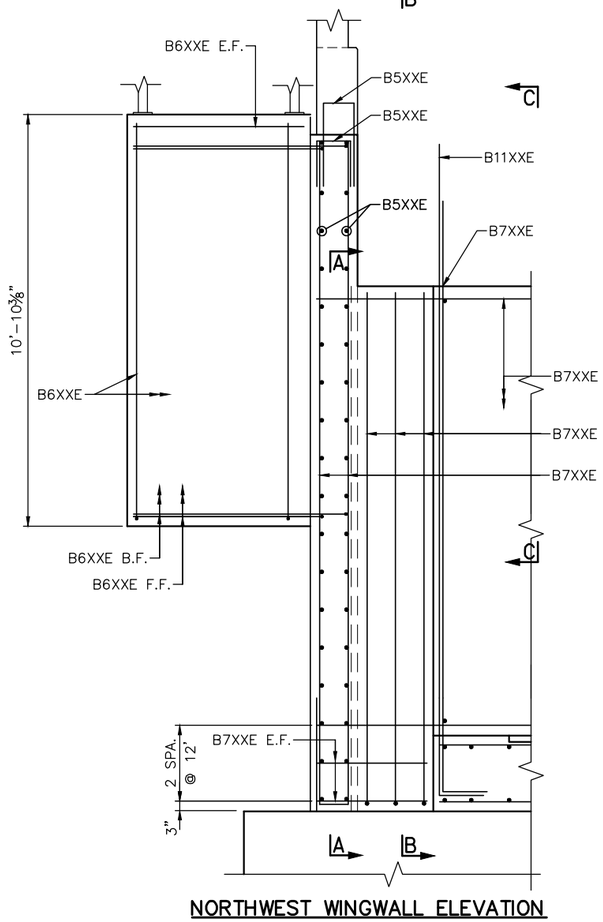

NORTHWEST WINGWALL ELEVATION

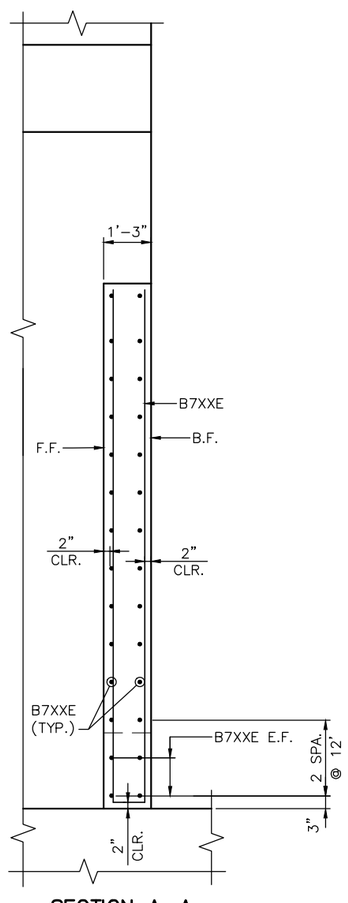

SECTION A–A

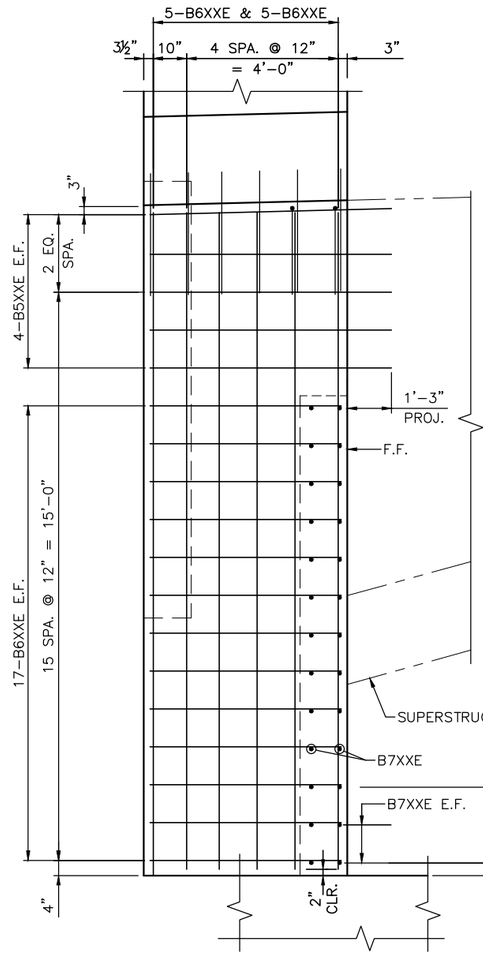

SECTION B–B

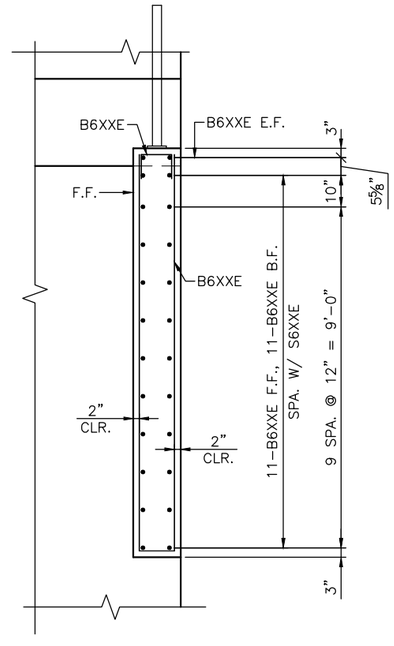

SECTION C–C

NO.	DATE	BY	CHECK	DESIGN	REVISION / SUBMITTAL

DESIGNED BY: NRW CHECKED BY: JSM
DRAWN BY: PGR CHECKED BY: JSM

AECOM Kimley»Horn

90% SUBMISSION - 01/22/16

METROPOLITAN COUNCIL

SOUTHWEST Green Line LRT Extension

CIVIL - VOLUME 4F
CEDAR LAKE CHANNEL LRT BRIDGE
BRIDGE R0693
NORTH ABUTMENT REINFORCEMENT 4

DISCIPLINE: STRUCTURES
SHEET NAME: CBRR0693-BRG-ABT-015

SHEET 18 OF 39

Jan, 16 2016 10:09 am V:\3400_ADC\CAD\SEGMENT E3\PLAN SHEETS\STRUCTURES\R0693 CLCH-LRT\CBRR0693-BRG-ABUT.dwg By: Nick.Williamson

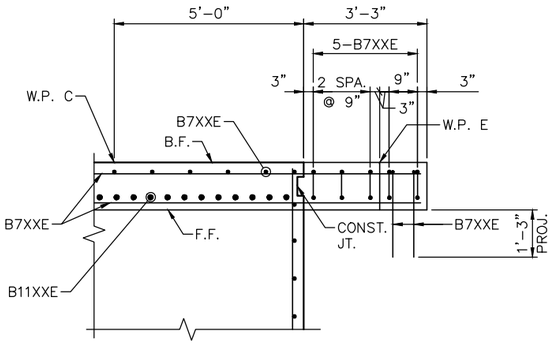

NORTHEAST WINGWALL PLAN

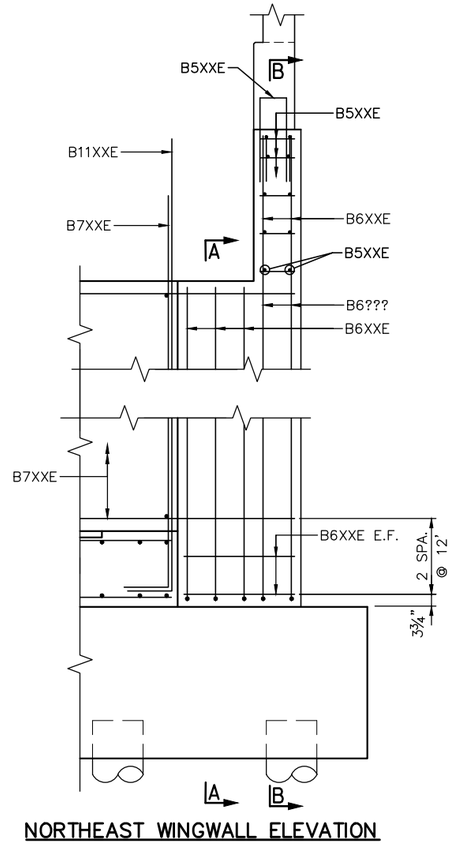

NORTHEAST WINGWALL ELEVATION

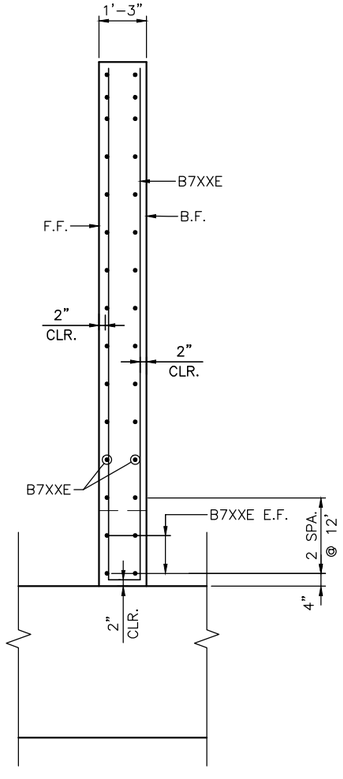

SECTION A–A

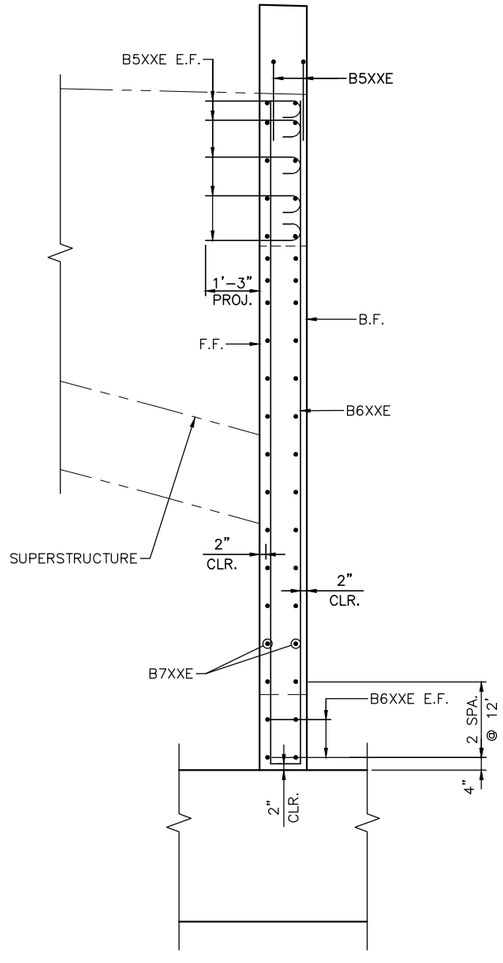

SECTION B–B

NO.	DATE	BY	CHECK	DESIGN	REVISION / SUBMITTAL

DESIGNED BY: NRW | CHECKED BY: JSM
DRAWN BY: PGR | CHECKED BY: JSM

AECOM Kimley»Horn

90% SUBMISSION - 01/22/16

METROPOLITAN COUNCIL

SOUTHWEST Green Line LRT Extension

CIVIL - VOLUME 4F
CEDAR LAKE CHANNEL LRT BRIDGE
BRIDGE R0693
NORTH ABUTMENT REINFORCEMENT 5

DISCIPLINE: STRUCTURES

SHEET NAME: CBRR0693-BRG-ABT-016

SHEET 19 OF 39

Jan, 16 2016 10:09 am V:\3400_ADC\CAD\SEGMENT E3\PLAN SHEETS\STRUCTURES\R0693 CLCH-LRT\CBRR0693-BRG-ABUT.dwg By: Nick.Williamson

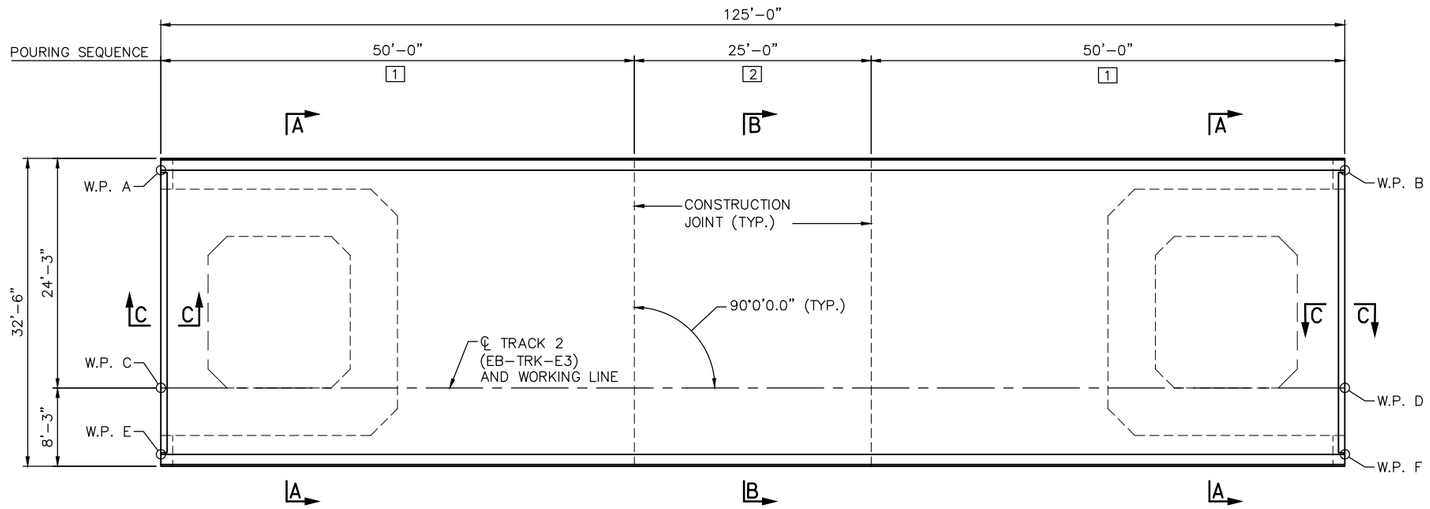

POURING SEQUENCE PLAN

NOTES:

72 HOUR TIME DELAY REQUIRED BETWEEN ADJACENT POURS TO ALLOW FOR SHRINKAGE.

SUPERSTRUCTURE CONCRETE TO BE 3JM.

FOR SECTIONS A-A, B-B AND C-C, SEE NEXT SHEET.

FOR DIMENSIONS, SEE "DIMENSION DATA TABLE" ON NEXT SHEET.

FOR REQUIRED CLEARANCES DURING CONSTRUCTION, SEE STAGING PLANS.

POURING SEQUENCE:

CONSTRUCT ABUTMENTS

1 SUPERSTRUCTURE END POURS

2 SUPERSTRUCTURE CLOSURE POUR

ALL PORTIONS OF THE SUPERSTRUCTURE MUST BE SUPPORTED UNTIL ALL POURS ARE COMPLETE.

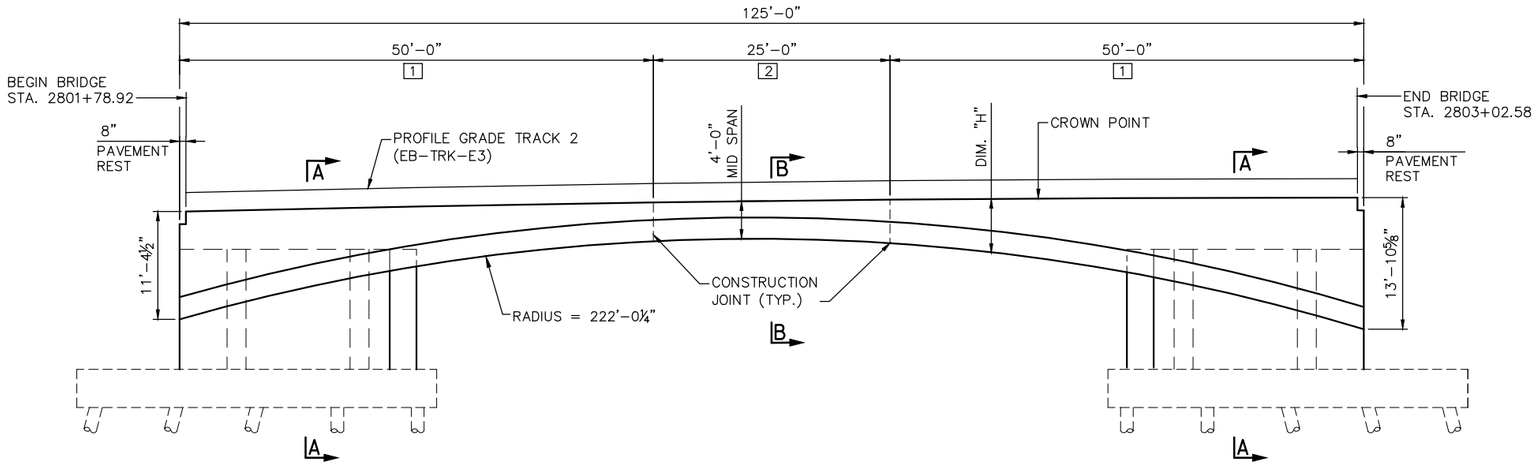

POURING SEQUENCE ELEVATION

NO.	DATE	BY	CHECK	DESIGN	REVISION / SUBMITTAL

DESIGNED BY: NRW CHECKED BY: JSM
DRAWN BY: PGR CHECKED BY: NRW

AECOM Kimley»Horn

90% SUBMISSION - 01/22/16

METROPOLITAN COUNCIL

SOUTHWEST Green Line LRT Extension

CIVIL - VOLUME 4F
CEDAR LAKE CHANNEL LRT BRIDGE
BRIDGE R0693
SUPERSTRUCTURE DETAILS 1

DISCIPLINE: STRUCTURES
SHEET NAME: CBRR0693-BRG-SUP-001

SHEET 20 OF 39

Jan, 16 2016 10:09 am V:\3400_ADC\CAD\SEGMENT E3\PLAN SHEETS\STRUCTURES\R0693 CLCH-LRT\CBRR0693-BRG-SUP.dwg By: Nick.Williamson

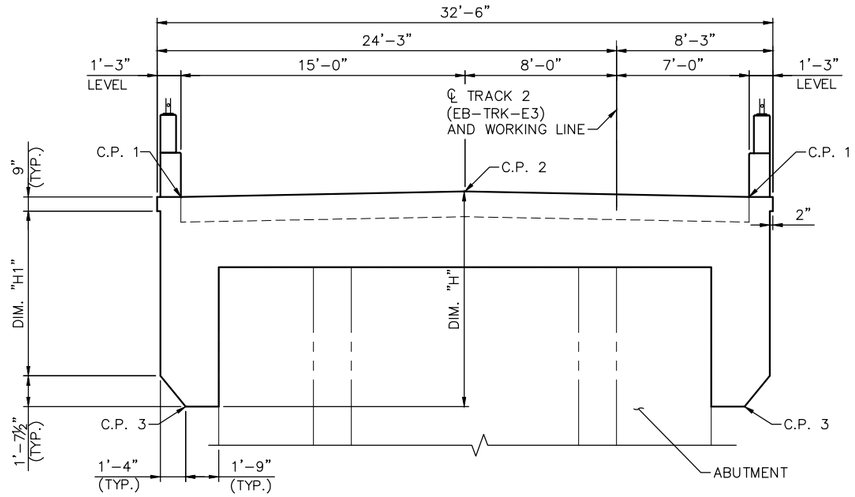

SECTION A-A

DIMENSION DATA TABLE						
STATION	DIM. "H" (FT.)	DIM. "H1" (FT.)	C.P. 1 ELEV.	C.P. 2 ELEV.	C.P. 3 ELEV.	DL DEFL. (IN.)
2801+78.25	11.36	8.68	866.36	866.66	855.31	----
2801+83.25	10.12	7.45	866.48	866.78	856.66	----
2801+88.25	9.00	6.33	866.60	866.90	857.90	----
2801+93.25	8.00	5.32	866.70	867.00	859.01	----
2801+98.25	7.11	4.43	866.81	867.11	860.00	0.0
2802+03.25	6.33	3.66	866.91	867.21	860.87	0.0
2802+08.25	5.67	3.00	867.00	867.30	861.63	0.1
2802+13.25	5.12	2.45	867.09	867.39	862.27	0.1
2802+18.25	4.68	2.00	867.17	867.47	862.80	0.2
2802+23.25	4.35	1.67	867.25	867.55	863.21	0.2
2802+28.25	4.12	1.45	867.33	867.63	863.50	0.2
2802+33.25	4.01	1.33	867.40	867.70	863.69	0.3
2802+38.25	4.00	1.32	867.46	867.76	863.76	0.3
2802+43.25	4.10	1.42	867.52	867.82	863.72	0.3
2802+48.25	4.30	1.63	867.57	867.87	863.57	0.3
2802+53.25	4.62	1.94	867.62	867.92	863.30	0.2
2802+58.25	5.04	2.37	867.66	867.96	862.92	0.2
2802+63.25	5.57	2.90	867.70	868.00	862.43	0.1
2802+68.25	6.21	3.54	867.74	868.04	861.82	0.1
2802+73.25	6.97	4.29	867.76	868.06	861.09	0.0
2802+78.25	7.83	5.16	867.79	868.09	860.25	----
2802+83.25	8.81	6.13	867.81	868.11	859.29	----
2802+88.25	9.90	7.22	867.82	868.12	858.22	----
2802+93.25	11.11	8.43	867.83	868.13	857.02	----
2802+98.25	12.43	9.76	867.83	868.13	855.69	----
2803+03.25	13.88	11.21	867.83	868.13	854.24	----

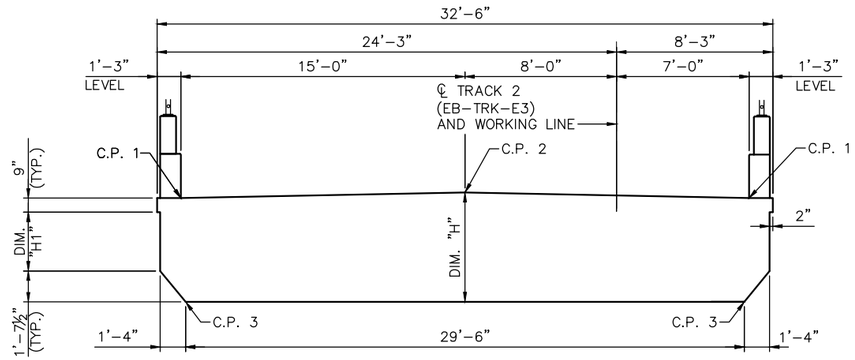

SECTION B-B

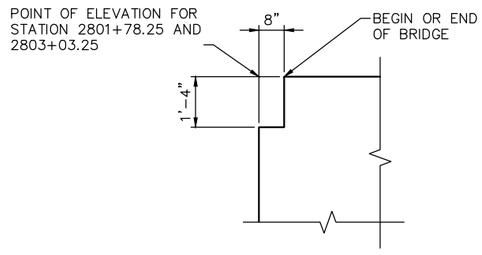

SECTION C-C

NO.	DATE	BY	CHECK	DESIGN	REVISION / SUBMITTAL

DESIGNED BY: NRW | CHECKED BY: JSM
DRAWN BY: PGR | CHECKED BY: NRW

AECOM Kimley»Horn

90% SUBMISSION - 01/22/16

METROPOLITAN COUNCIL

SOUTHWEST Green Line LRT Extension

CIVIL - VOLUME 4F
CEDAR LAKE CHANNEL LRT BRIDGE
BRIDGE R0693
SUPERSTRUCTURE DETAILS 2

DISCIPLINE: STRUCTURES
SHEET NAME: CBRR0693-BRG-SUP-002

SHEET 21 OF 39

Jan, 16 2016 10:09 am V:\3400_ADC\CAD\SEGMENT E3\PLAN SHEETS\STRUCTURES\R0693 CLCH-LRT\CBRR0693-BRG-SUP.dwg By: Nick.Williamson

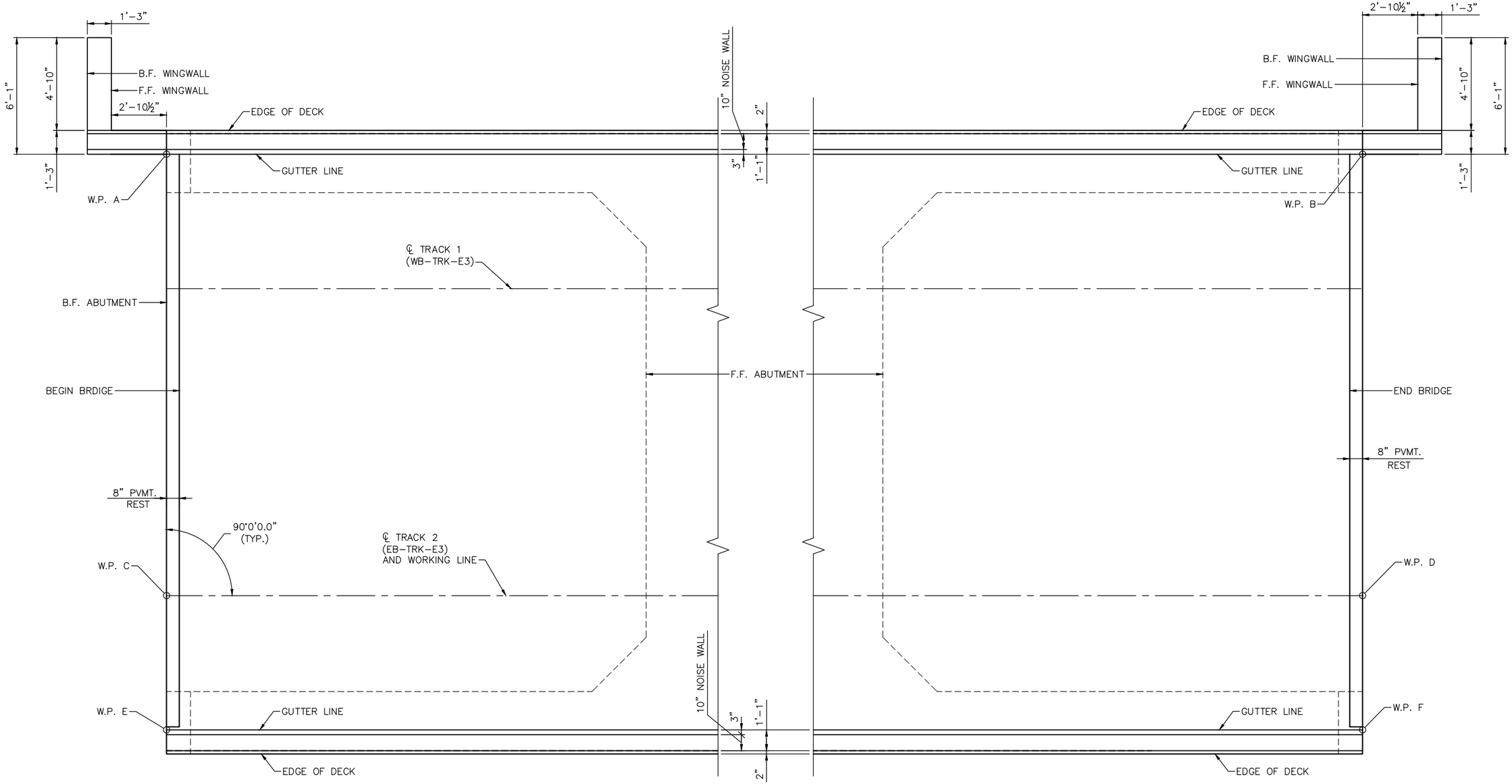

SOUTH ABUTMENT CORNER DETAIL

NORTH ABUTMENT CORNER DETAIL

NO.	DATE	BY	CHECK	DESIGN	REVISION / SUBMITTAL

DESIGNED BY: NRW | CHECKED BY: JSM
DRAWN BY: PGR | CHECKED BY: NRW

AECOM Kimley»Horn

90% SUBMISSION - 01/22/16

METROPOLITAN COUNCIL

SOUTHWEST Green Line LRT Extension

CIVIL - VOLUME 4F
CEDAR LAKE CHANNEL LRT BRIDGE
BRIDGE R0693
SUPERSTRUCTURE DETAILS 3

DISCIPLINE: STRUCTURES
SHEET NAME: CBRR0693-BRG-SUP-003

SHEET 22 OF 39

Jan, 16 2016 10:09 am V:\3400_ADC\CAD\SEGMENT E3\PLAN SHEETS\STRUCTURES\R0693 CLCH-LRT\CBRR0693-BRG-SUP-003.dwg By: Nick.Williamson

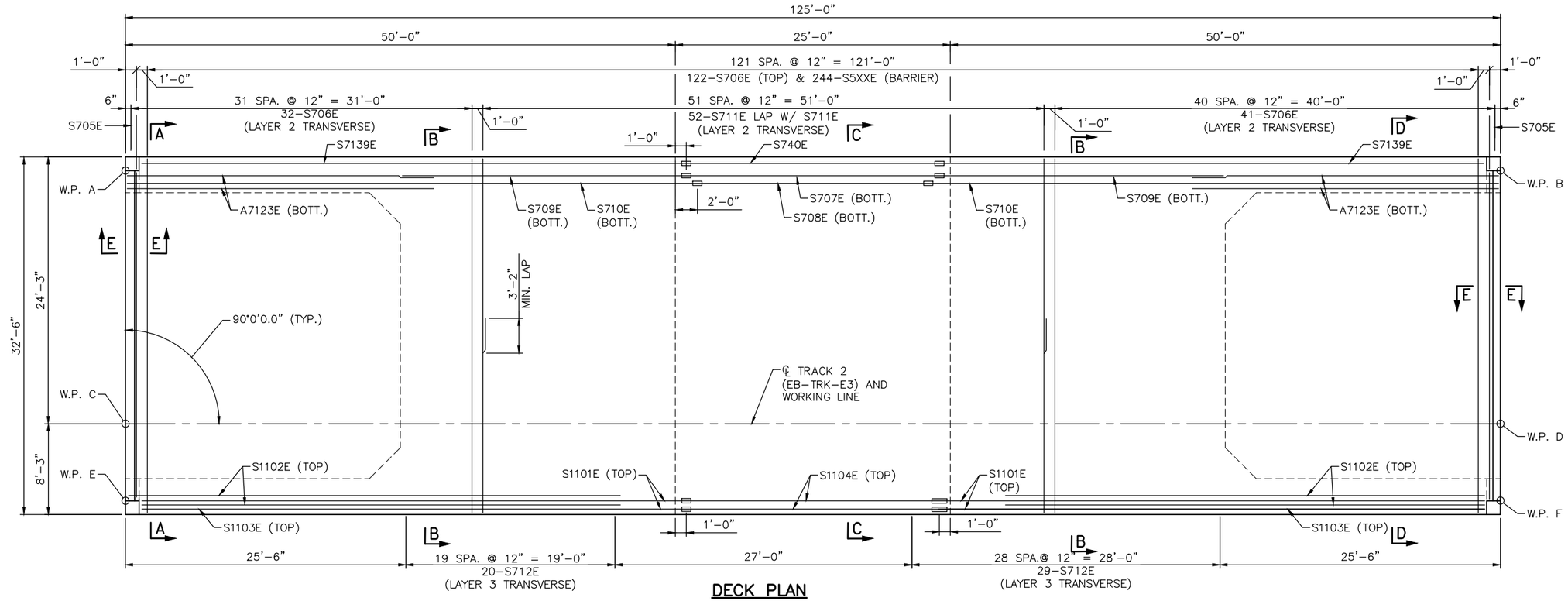

DECK PLAN

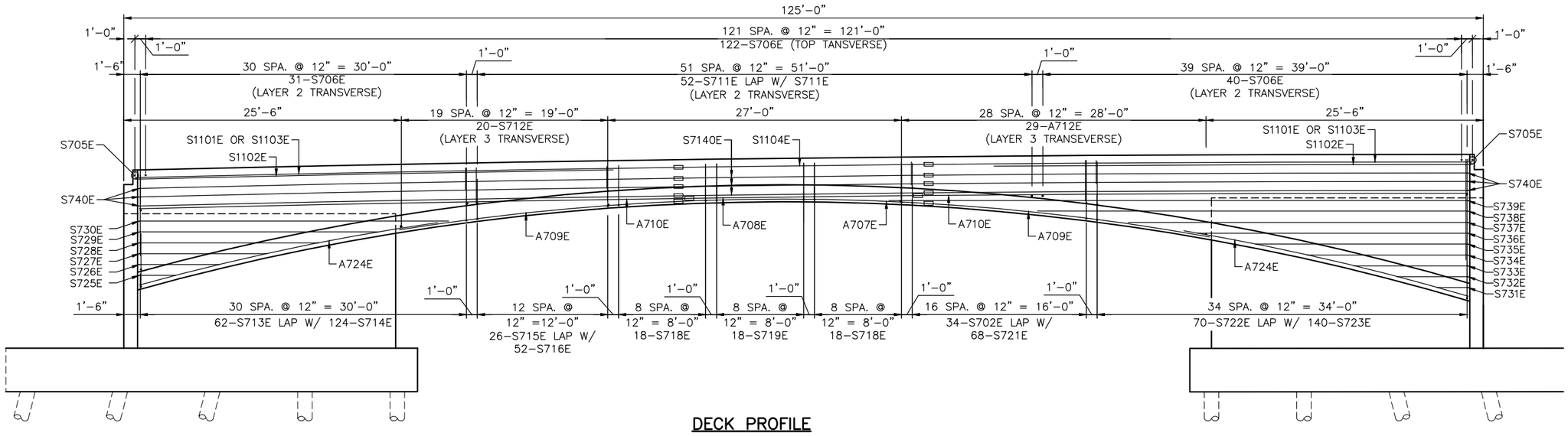

DECK PROFILE

NOTES:

FOR SECTION A-A, B-B, C-C AND D-D SEE NEXT SHEET.

NO.	DATE	BY	CHECK	DESIGN	REVISION / SUBMITTAL

DESIGNED BY: NRW | CHECKED BY: JSM
DRAWN BY: PGR | CHECKED BY: NRW

AECOM Kimley»Horn

90% SUBMISSION - 01/22/16

METROPOLITAN COUNCIL

SOUTHWEST Green Line LRT Extension

CIVIL - VOLUME 4F
CEDAR LAKE CHANNEL LRT BRIDGE
BRIDGE R0693
SUPERSTRUCTURE REINFORCEMENT 1

DISCIPLINE: STRUCTURES

SHEET NAME: CBRR0693-BRG-SUP-004

SHEET 23 OF 39

Jan. 16 2016 10:09 am V:\3400_ADC\CAD\SEGMENT E3\PLAN SHEETS\STRUCTURES\R0693 CLCH-LRT\CBRR0693-BRG-SUP.dwg By: Nick.Williamson

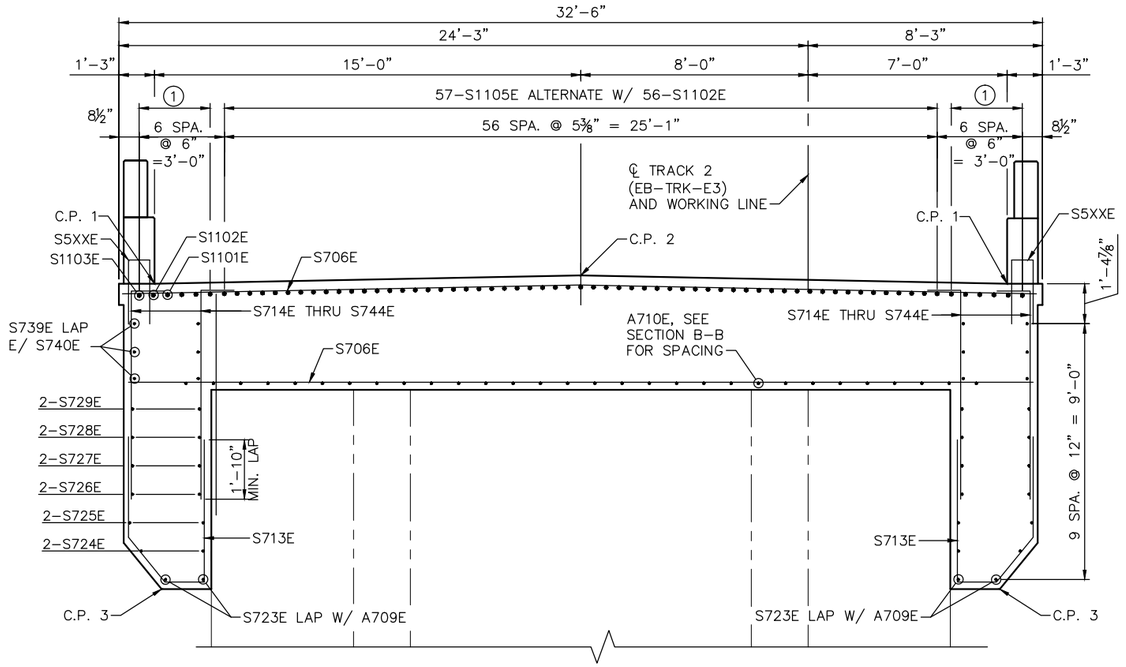

SECTION A-A

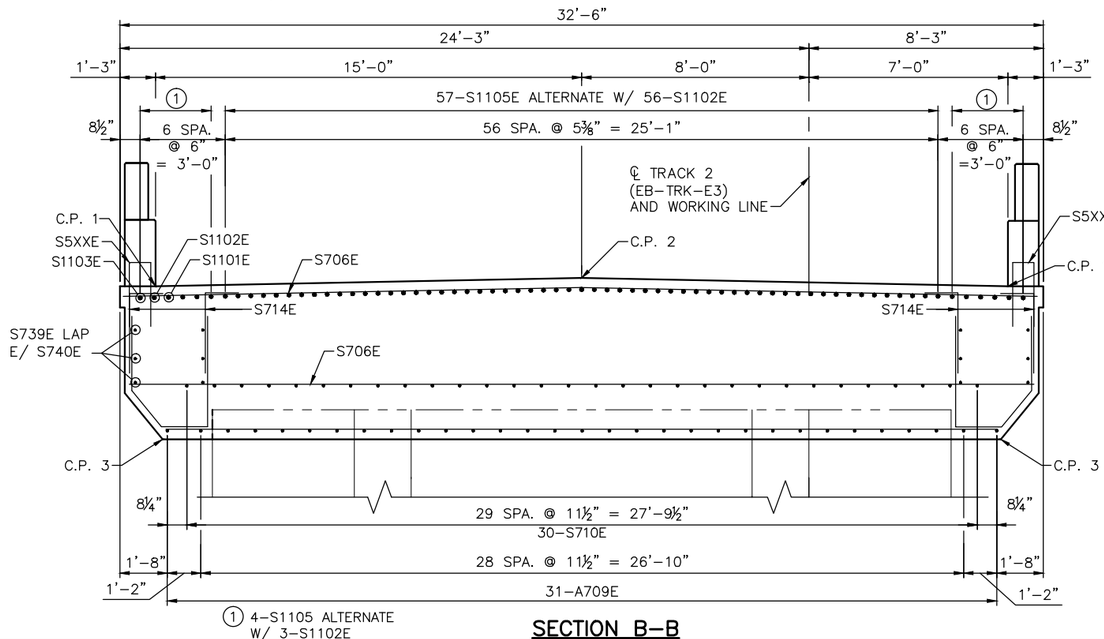

SECTION B-B

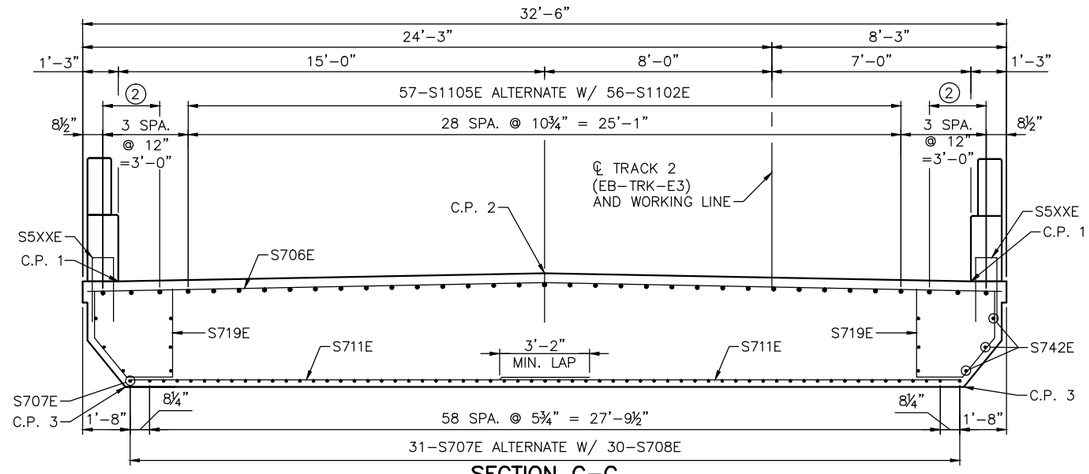

SECTION C-C

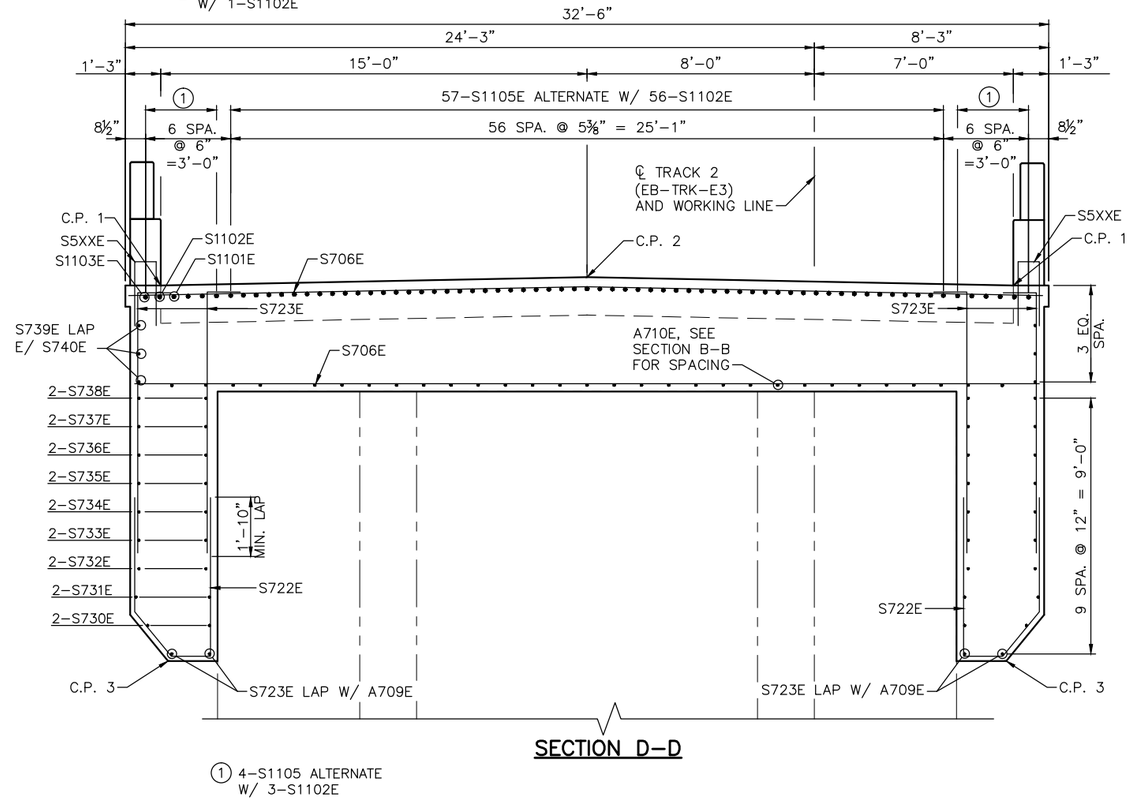

SECTION D-D

NO.	DATE	BY	CHECK	DESIGN	REVISION / SUBMITTAL

DESIGNED BY: NRW | CHECKED BY: JSM
DRAWN BY: PGR | CHECKED BY: JSM

AECOM Kimley»Horn

90% SUBMISSION - 01/22/16

METROPOLITAN COUNCIL

SOUTHWEST Green Line LRT Extension

CIVIL - VOLUME 4F
CEDAR LAKE CHANNEL LRT BRIDGE
BRIDGE R0693
SUPERSTRUCTURE REINFORCEMENT 2

DISCIPLINE: STRUCTURES

SHEET NAME: CBRR0693-BRG-SUP-005

SHEET 24 OF 39

Jan, 16 2016 10:09 am V:\3400_ADC\CAD\SEGMENT E3\PLAN SHEETS\STRUCTURES\R0693 CLCH-LRT\CBRR0693-BRG-SUP.dwg By: Nick.Williamson

BILL OF REINFORCEMENT FOR SUPERSTRUCTURE				
BAR	NO.	LENGTH	SHAPE	LOCATION
S1101E	66	50'-10"	STR.	SLAB LONG. TOP POUR 1
S1102E	68	45'-0"	STR.	SLAB LONG. TOP POUR 1
S1103E	4	49'-5"	STR.	SLAB LONG. TOP POUR 1
S1104E	35	23'-0"	STR.	SLAB LONG. TOP POUR 2
S705E	2	29'-8"	STR.	TRANS. TOP
S706E	195	32'-2"	STR.	TRANS. TOP
S707E	31	23'-0"	STR.	LONG. BOTT. POUR 2
S708E	30	21'-0"	STR.	LONG. BOTT. POUR 2
S709E	31	25'-10"	STR.	LONG. BOTT. POUR 1
S710E	30	51'-10"	STR.	LONG. BOTT. POUR 1
S711E	104	17'-8"	STR.	TRANS. BOTT.
S712E	49	29'-1"	STR.	TRANS. BOTT.
S713E	62	'-"	BENT	TRANS. TIE
S714E	124	'-"	BENT	TRANS. TIE
S715E	26	'-"	BENT	TRANS. TIE
S716E	52	'-"	BENT	TRANS. TIE
S718E	36	'-"	BENT	TRANS. TIE
S719E	18	'-"	BENT	TRANS. TIE
S720E	34	'-"	BENT	TRANS. TIE
S721E	68	'-"	BENT	TRANS. TIE
S722E	70	'-"	BENT	TRANS. TIE
S723E	140	'-"	BENT	TRANS. TIE
S724E	8	28'-0"	STR.	LONG. BOTT.
S725E	4	3'-4"	STR.	LONG. BOTT.
S726E	4	7'-4"	STR.	LONG. BOTT.
S727E	4	11'-8"	STR.	LONG. BOTT.
S728E	4	16'-6"	STR.	LONG. BOTT.
S729E	4	21'-11"	STR.	LONG. BOTT.
S730E	4	28'-5"	STR.	LONG. BOTT.
S731E	4	2'-9"	STR.	LONG. BOTT.
S732E	4	6'-6"	STR.	LONG. BOTT.
S733E	4	10'-5"	STR.	LONG. BOTT.
S734E	4	14'-9"	STR.	LONG. BOTT.
S735E	4	19'-6"	STR.	LONG. BOTT.
S736E	4	24'-11"	STR.	LONG. BOTT.
S737E	4	31'-2"	STR.	LONG. BOTT.
S738E	4	39'-7"	STR.	LONG. BOTT.
S739E	4	53'-2"	STR.	LONG. BOTT.
S740E	24	50'-10"	STR.	LONG. BOTT.
S741E	12	23'-0"	STR.	LONG. BOTT.

Jan, 16 2016 10:10 am V:\3400_ADC\CAD\SEGMENT E3\PLAN SHEETS\STRUCTURES\R0693 CLCH-LRT\CBRR0693-BRG-SUP.dwg By: Nick.Williamson

NO.	DATE	BY	CHECK	DESIGN	REVISION / SUBMITTAL

DESIGNED BY: NRW | CHECKED BY: JSM
DRAWN BY: PGR | CHECKED BY: NRW

AECOM Kimley»Horn

90% SUBMISSION - 01/22/16

METROPOLITAN COUNCIL

SOUTHWEST Green Line LRT Extension

CIVIL - VOLUME 4F
CEDAR LAKE CHANNEL LRT BRIDGE
BRIDGE R0693
SUPERSTRUCTURE REINFORCEMENT 3

DISCIPLINE: STRUCTURES
SHEET NAME: CBRR0693-BRG-SUP-006

SHEET 25 OF 39

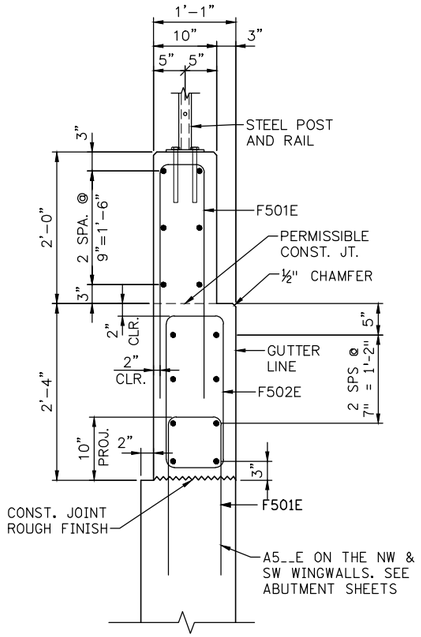

SECTION A-A

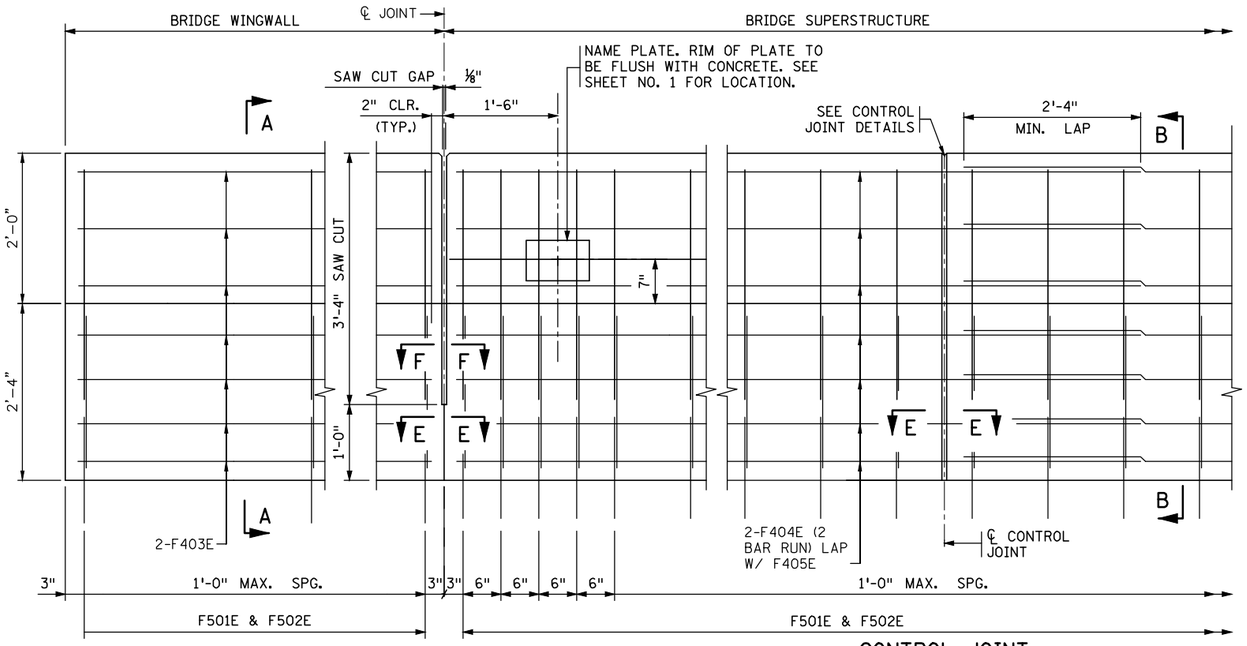

JOINT AT ABUTMENT

CONTROL JOINT

INSIDE ELEVATION OF PARAPET

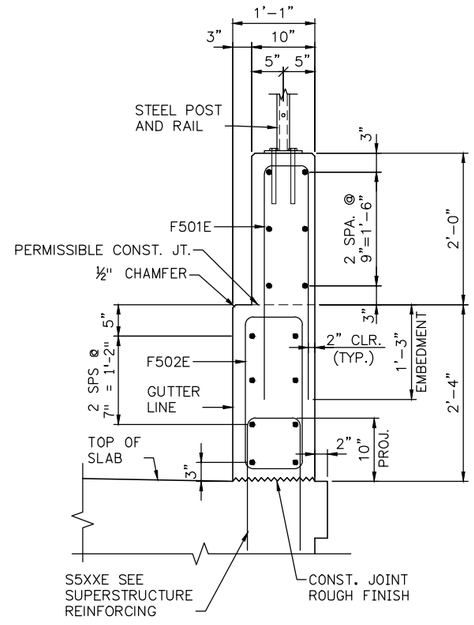

SECTION B-B

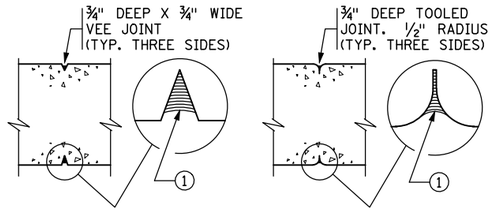

SECTION E-E

CONTRACTOR OPTION 1

SECTION E-E

CONTRACTOR OPTION 2

CONTROL JOINT DETAILS

WHEN USING SLIP FORM METHOD TO PLACE THE CONCRETE, CUT JOINT 3 INCHES DEEP USING MARGIN TROWEL OR SIMILAR MEANS IMMEDIATELY AFTER CONCRETE PLACEMENT (TYP. THREE SIDES)

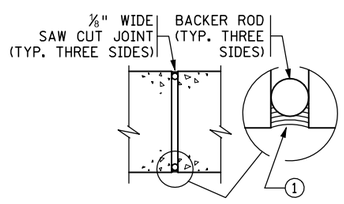

SECTION F-F

BILL OF REINFORCEMENT FOR PARAPET				
BAR	NO.	LENGTH	SHAPE	LOCATION
F501E	258	6'-8"	⊏	PARAPET VERTICAL
F502E	258	6'-10"	▭	PARAPET VERTICAL
F403E	28	5'-0"	——	PARAPET LONGIT.
F404E	56	60'-0"	——	PARAPET LONGIT.
F405E	28	6'-10"	——	PARAPET LONGIT.

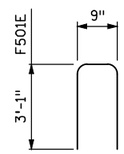

F501E

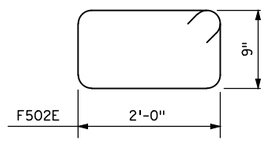

F502E

GENERAL NOTES

CONTINUOUSLY GROUND ALL METAL RAILINGS; SEE THE SPECIAL PROVISIONS. REFER TO THE ELECTRICAL PLANS AND ELECTRICAL SPECIAL PROVISIONS FOR DETAILS REGARDING BONDING MULTIPLE ELECTRICAL GROUNDING SYSTEMS.

FINISH ALL EDGES OF PARAPET WITH ½" CHAMFER, EXCEPT WHERE OTHERWISE NOTED.

MAXIMUM SPACING OF CONTROL JOINTS ON SUPERSTRUCTURE, APPROACH AND WINGWALL SHALL BE 10 FT.

(1) JOINT SEALANT PER MnDOT APPROVED/QUALIFIED PRODUCTS LIST - CRACK AND JOINT MATERIALS - SILICONE JOINT SEALERS.

NO.	DATE	BY	CHECK	DESIGN	REVISION / SUBMITTAL

DESIGNED BY: NRW CHECKED BY: JSM
DRAWN BY: PGR CHECKED BY: JSM

AECOM Kimley»Horn

90% SUBMISSION - 01/22/16

METROPOLITAN COUNCIL

SOUTHWEST Green Line LRT Extension

CIVIL - VOLUME 4F
CEDAR LAKE CHANNEL LRT BRIDGE
BRIDGE R0693
CONCRETE PARAPET

DISCIPLINE: STRUCTURES

SHEET NAME: CBRR0693-BRG-DTL-001

SHEET 26 OF 39

Jan, 16 2016 10:10 am V:\3400_ADC\CAD\SEGMENT E3\PLAN SHEETS\STRUCTURES\R0693 CLCH-LRT\CBRR0693-BRG-RAL.dwg By: Nick.Williamson

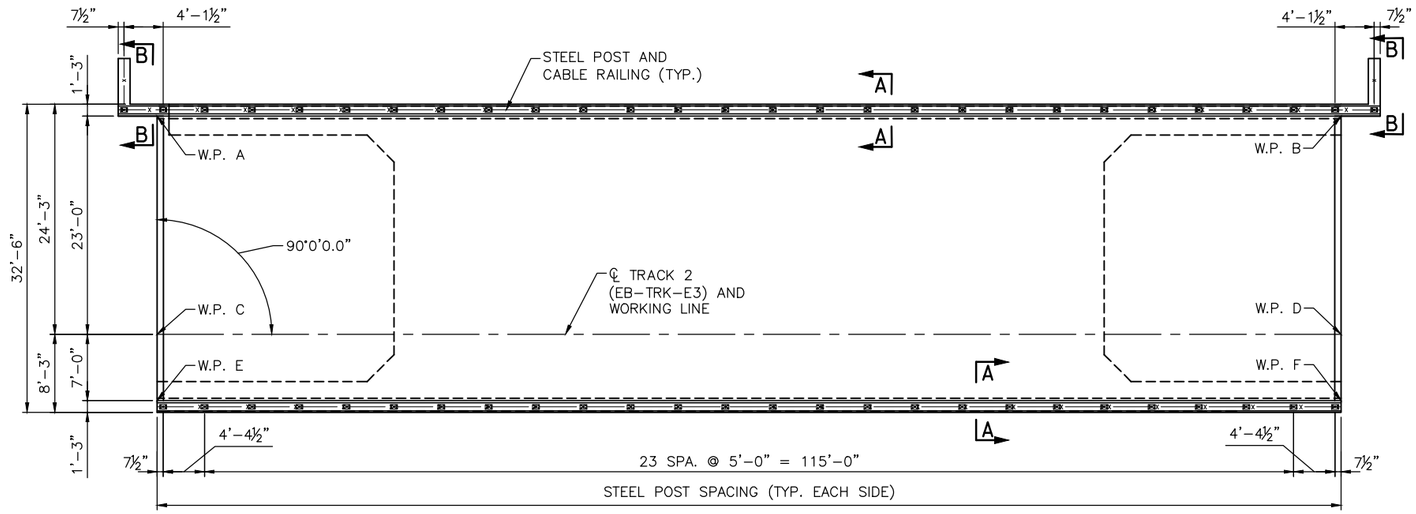

RAIL PLAN

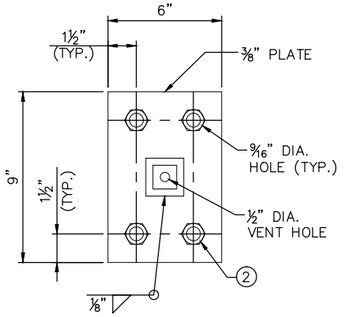

SECTION D–D

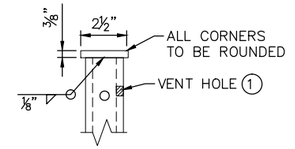

POST CAP DETAIL

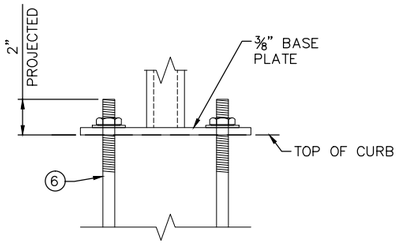

ANCHOR DETAIL

NOTES:

USE A500, GRADE B STRUCTURAL STEEL TUBING (HSS) IN THE RAIL CONFORMING TO SPEC. 3361. FINIAL CAPS SHALL BE SPEC. 3322. ALL OTHER STEEL SHALL CONFORM TO SPEC. 3306.

GALVANIZE BOLTS, NUTS, WASHERS, AND ANCHORS PER SPEC. 3392. GALVANIZE ALL OTHER STRUCTURAL STEEL PER SPEC. 3394, AFTER FABRICATION.

COAT THE GALVANIZED RAILING, BASE PLATES, AND PROTRUDING PORTIONS OF BOLTS, NUTS, ANCHORS, AND WASHERS.

INSTALL RAIL POSTS PLUMB.

SEE SPECIAL PROVISIONS FOR REQUIREMENTS NOT INCLUDED ON THIS SHEET.

DRILL ½" DIA. MAX. VENT HOLES ON THE UNDERSIDE OF RAIL TUBES AS NECESSARY TO FACILITATE GALVANIZING.

(1) DRILL VENT HOLE IN THE RAIL POST WITHIN 2" OF THE UNDERSIDE OF THE CAP, ON THE NON–TRAFFIC SIDE OF THE POST AS NECESSARY TO FACILITATE GALVANIZING. MAXIMUM HOLE SIZE IS ½" DIA.

(2) ADHESIVE ANCHORAGE WITH ½" DIA. ANCHOR ROD PER SPEC. 3385. TYPE A WITH HEX NUT AND WASHER. PROVIDE AN ADHESIVE WITH A MINIMUM CHARACTERISTIC BOND STRENGTH IN UNCRACKED CONCRETE OF 1.5 KSI. EMBED THE ANCHORAGE NO LESS THAN 6" REGARDLESS OF CHARACTERISTIC BOND STRENGTH. DRILL THROUGH REINFORCEMENT(IF ENCOUNTERED) TO ACHIEVE MINIMUM EMBEDMENT. ENSURE HEX NUT IS IN CONTACT WITH THE ADJACENT SURFACE AND TORQUE TO 60 FT–LBS UNLESS A HIGHER TORQUE IS RECOMMENDED BY THE MANUFACTURER. PROOF LOAD TO 4.8 KIPS. SEE SPECIAL PROVISIONS FOR ADDITIONAL REQUIREMENTS.

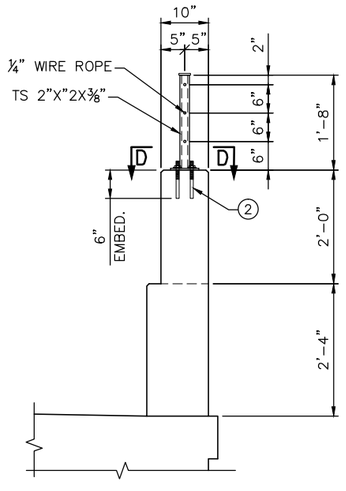

SECTION A–A

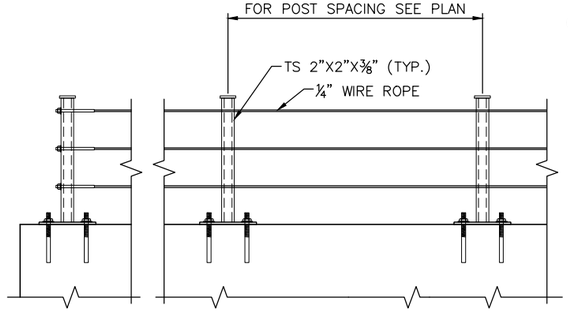

TYPICAL STEEL POST AND RAILING ELEVATION

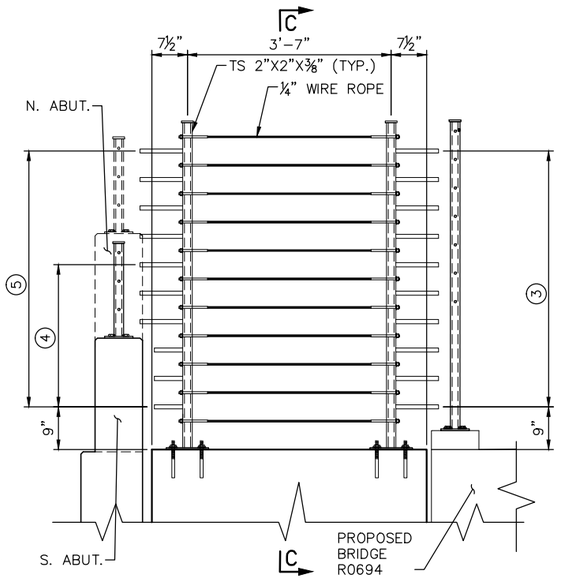

ELEVATION B–B

(3) 10 – 9"x⅞" DIA. ROD WELDED TO POST (TYP. BOTH ABUTS.) SPA. @ 6" = 4'–6"

(4) 3 – 6"x⅞" DIA. ROD AND 3 – 9"x⅞" DIA. ROD WELDED TO POST (TYP. S. ABUT.) SPA. @ 6" = 2'–6"

(5) 7 – 6"x⅞" DIA. ROD AND 3 – 9"x⅞" DIA. ROD WELDED TO POST (TYP. S. ABUT.) SPA. @ 6" = 4'–6"

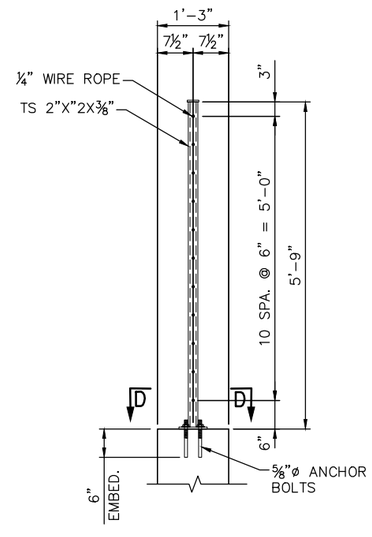

SECTION C–C

NO.	DATE	BY	CHECK	DESIGN	REVISION / SUBMITTAL

DESIGNED BY: NRW CHECKED BY: JSM
DRAWN BY: PGR CHECKED BY: JSM

AECOM Kimley»Horn

90% SUBMISSION - 01/22/16

METROPOLITAN COUNCIL

SOUTHWEST Green Line LRT Extension

CIVIL - VOLUME 4F
CEDAR LAKE CHANNEL LRT BRIDGE
BRIDGE R0693
STEEL POST AND CABLE RAILING DETAIL

DISCIPLINE: STRUCTURES

SHEET NAME: CBRR0693-BRG-DTL-002

SHEET 27 OF 39

Jan, 16 2016 10:10 am V:\3400_ADC\CAD\SEGMENT E3\PLAN SHEETS\STRUCTURES\R0693 CLCH-LRT\CBRR0693-BRG-RAL.dwg By: Nick.Williamson

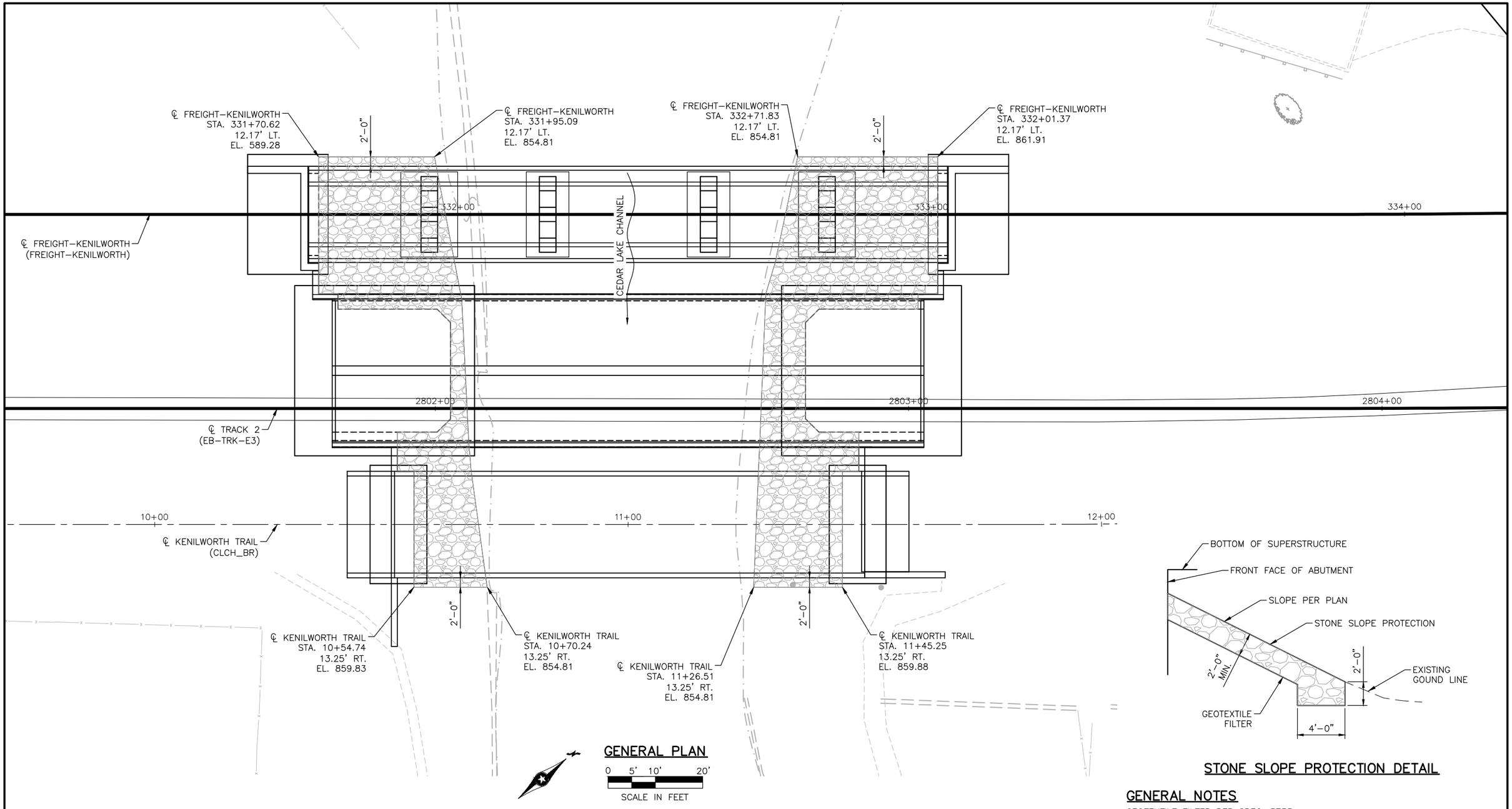

GENERAL PLAN

0 5' 10' 20'

SCALE IN FEET

STONE SLOPE PROTECTION DETAIL

GENERAL NOTES

GEOTEXTILE FILTER PER SPEC. 3733

STONE SLOPE PROTECTION SHALL BE IN ACCORDANCE WITH THE SPECIAL PROVISIONS.

NO.	DATE	BY	CHECK	DESIGN	REVISION / SUBMITTAL

DESIGNED BY: NRW | CHECKED BY: JSM
DRAWN BY: PGR | CHECKED BY: NRW

AECOM Kimley»Horn

90% SUBMISSION - 01/22/16

METROPOLITAN COUNCIL

SOUTHWEST Green Line LRT Extension

CIVIL - VOLUME 4F
CEDAR LAKE CHANNEL LRT BRIDGE
BRIDGE R0693
STONE SLOPE PROTECTION DETAILS

DISCIPLINE: STRUCTURES

SHEET NAME: CBRR0693-BRG-DTL-003

SHEET 28 OF 39

Jan, 16 2016 10:12 am V:\3400_ADC\CAD\SEGMENT E3\PLAN SHEETS\STRUCTURES\R0693 CLCH-LRT\CBRR0693-BRG-SLO.dwg By: Nick.Williamson

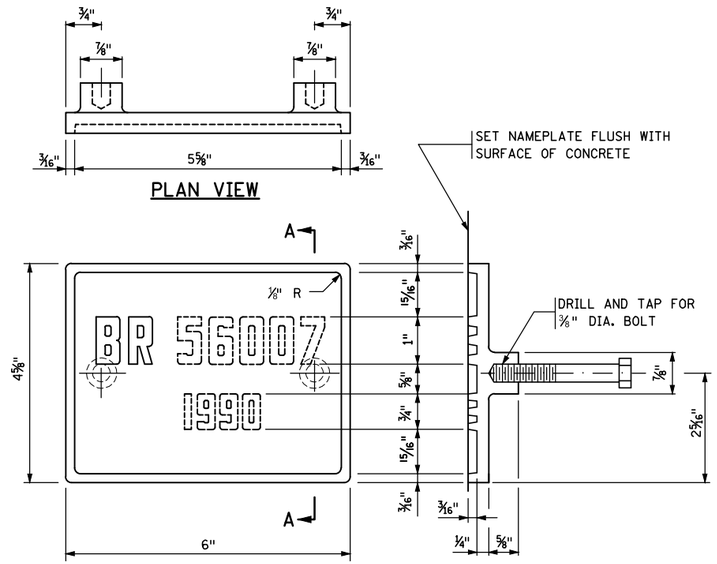

THE DASHED NUMBERS SHOWN ABOVE ARE FOR ILLUSTRATION.
DATA TO BE SHOWN ON NAMEPLATE IS AS FOLLOWS:

BRIDGE R0693

YEAR ①



NUMBERS FOR NAMEPLATE

NOTES:

MATERIAL SHALL COMPLY WITH SPEC. 3327.

LETTERS AND NUMBERS SHALL CONFORM TO THOSE SHOWN.

DRAFT ON LETTERS AND NUMBERS SHALL NOT BE MORE THAN 3" IN 12".

HORIZONTAL SPACING OF LETTERS AND NUMBERS SHALL PRODUCE A BALANCED LAYOUT IN PROPORTION TO SPACING SHOWN.

TOP SURFACE OF LETTERS, NUMBERS AND FRAMES SHALL BE BURNISHED.

FURNISH 2 STEEL BOLTS ⅜" DIA. x 3" LONG WITH EACH PLATE.

ALL DIMENSIONS FOR 1" HIGH LETTERS AND NUMBERS SHALL BE IN DIRECT PROPORTION TO THOSE SHOWN FOR THE 1" HIGH LETTERS AND NUMBERS.

① YEAR OF CONSTRUCTION.

APPROVED: NOVEMBER 22, 2002	STATE OF MINNESOTA DEPARTMENT OF TRANSPORTATION	REVISION 09-11-2014	DETAIL NO.
STATE BRIDGE ENGINEER	BRIDGE NAMEPLATE (FOR NEW BRIDGES)		B101

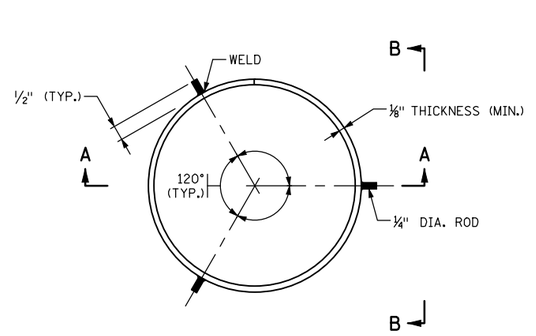

PLAN VIEW - SPLICE BACK-UP RING

PILE NOT SHOWN

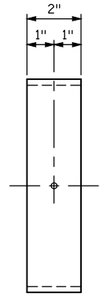

SECTION B-B

PILE NOT SHOWN

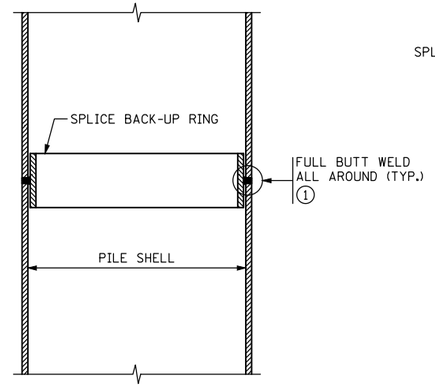

SECTION A-A

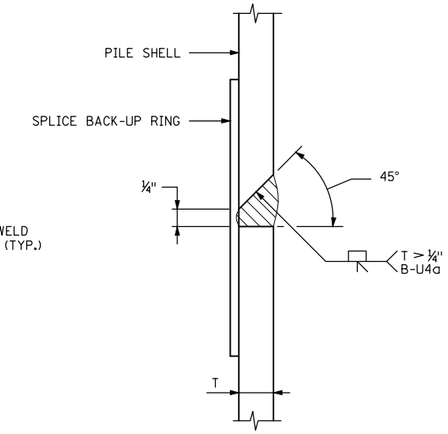

DETAIL "A" ①

NOTES:

APPROVED COMMERCIAL PILE SPLICE BACK-UP RING MAY BE USED IN LIEU OF THE TYPE DETAILED, PROVIDED THAT ." ROOT IS MAINTAINED. BACK-UP RING SHALL HAVE A TIGHT FIT.

WELDING ELECTRODES SHALL BE CELLULOSIC TYPE ELECTRODES E-6010 OR E-6011.

ELECTRODES WHICH HAVE BECOME WET, SOILED OR DAMAGED SHALL NOT BE USED.

WELDING SHALL NOT BE DONE WHEN THE AMBIENT TEMPERATURE IS LOWER THAN 0° F. OR WHEN THE PILE IS WET OR EXPOSED TO FALLING RAIN OR SNOW. WHEN THE PILE METAL TEMPERATURE IS BELOW 32° F., THE PILE METAL IN THE AREA OF THE WELD SHALL BE HEATED TO A MINIMUM TEMPERATURE OF 70° F. AND MAINTAINED AT THIS TEMPERATURE DURING WELDING.

① FOR PILE SHELL THICKNESSES GREATER THAN ¼", USE A B-U4a WELD CONFIGURATION. SEE DETAIL "A".

APPROVED: NOVEMBER 22, 2002	STATE OF MINNESOTA DEPARTMENT OF TRANSPORTATION	REVISION: 11-06-2013	DETAIL NO.
STATE BRIDGE ENGINEER	PILE SPLICE (CAST-IN-PLACE CONCRETE PILES)		B201

NO.	DATE	BY	CHECK	DESIGN	REVISION / SUBMITTAL

DESIGNED BY: NRW CHECKED BY: JSM

DRAWN BY: PGR CHECKED BY: NRW

AECOM Kimley»Horn

90% SUBMISSION - 01/22/16

METROPOLITAN COUNCIL

SOUTHWEST Green Line LRT Extension

CIVIL - VOLUME 4F
CEDAR LAKE CHANNEL LRT BRIDGE
BRIDGE R0693
BRIDGE DETAILS 1

DISCIPLINE: STRUCTURES

SHEET NAME: CBRR0693-BRG-DTL-004

SHEET 29 OF 39

Jan. 16 2016 10:13 am V:\3400_ADC\CAD\SEGMENT E3\PLAN SHEETS\STRUCTURES\R0693 CLCH-LRT\CBRR0693-BRG-DTL-002.dwg By: Nick.Williamson

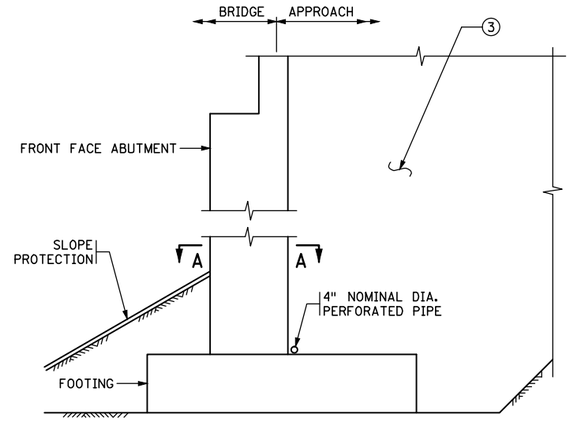

SECTION THROUGH PARAPET AND SEMI-INTEGRAL ABUTMENTS

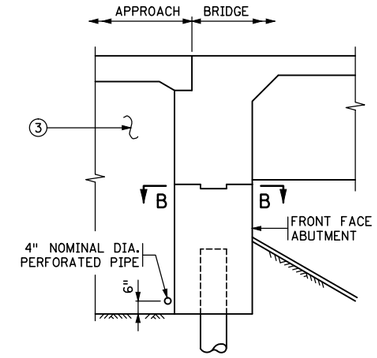

SECTION THROUGH INTEGRAL ABUTMENT

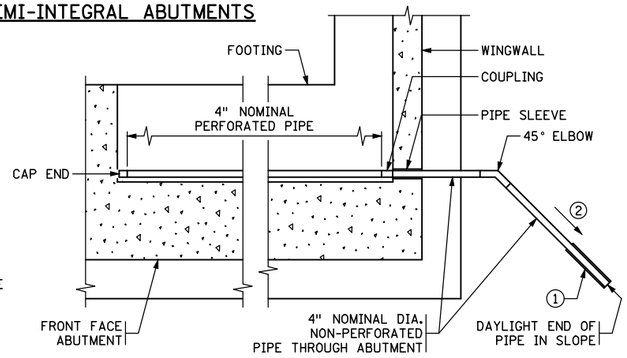

SECTION A-A

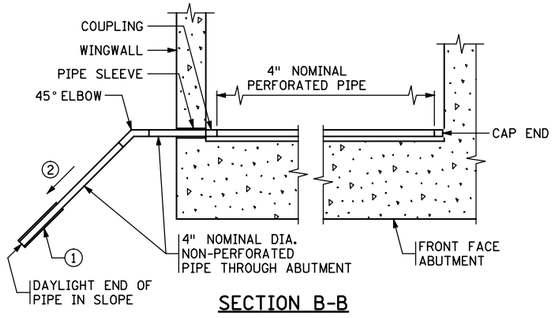

SECTION B-B

NOTES:

~~PAYMENT WILL BE INCLUDED IN THE SINGLE LUMP SUM PRICE FOR "DRAINAGE SYSTEM TYPE (B910)". INCLUDES BUT IS NOT LIMITED TO 4" DIAMETER PERFORATED AND NON-PERFORATED PIPE, ELBOWS, END CAPS, COUPLINGS, SLEEVES AND PRECAST CONCRETE HEADWALLS.~~

ALL PIPE TO COMPLY WITH SPEC. 3245.

WRAP PERFORATED PIPE WITH GEOTEXTILE PER SPEC. 3733, TYPE 1. ATTACH TO PIPE PER SPEC. 2502.

(1) AT CONTRACTORS OPTION, MAY TIE APPROACH PANEL DRAINAGE SYSTEM AND ABUTMENT DRAINAGE SYSTEM INTO A SINGLE PRECAST CONCRETE HEADWALL OR INTO A CATCH BASIN AS LONG AS A MINIMUM OF 1% POSITIVE SLOPE CAN BE MANTAINED.

USE PRECAST CONCRETE HEADWALL WITH RODENT SCREEN. SEE STANDARD PLATE 3131 FOR DETAILS.

(2) ⅛" PER FT. MINIMUM SLOPE.

(3) REFER TO GRADING PLANS FOR ABUTMENT BACKFILL REQUIREMENTS.

APPROVED: JANUARY 13, 2015	STATE OF MINNESOTA DEPARTMENT OF TRANSPORTATION	REVISED	DETAIL NO.
Nancy Daubenberger STATE BRIDGE ENGINEER	DRAINAGE SYSTEM		B910

NO.	DATE	BY	CHECK	DESIGN	REVISION / SUBMITTAL

DESIGNED BY: NRW CHECKED BY: JSM
DRAWN BY: PGR CHECKED BY: NRW

AECOM Kimley»Horn

90% SUBMISSION - 01/22/16

METROPOLITAN COUNCIL
SOUTHWEST Green Line LRT Extension

CIVIL - VOLUME 4F
CEDAR LAKE CHANNEL LRT BRIDGE
BRIDGE R0693
BRIDGE DETAILS 2

DISCIPLINE: STRUCTURES
SHEET NAME: CBRR0693-BRG-DTL-005

SHEET 30 OF 39

Jan, 16 2016 10:13 am v:\3400_ADC\CAD\SEGMENT E3\PLAN SHEETS\STRUCTURES\R0693 CLCH-LRT\CBRR0693-BRG-DTL-002.dwg By: Nick.Williamson

CONCRETE WEARING COURSE

☐ LOW SLUMP

☐ OTHER _____
TYPE OR MANUFACTURER

EXPANSION JOINTS

JOINT MANUFACTURER

MANUFACTURER'S IDENTIFICATION _____
MFR'S No. AND/OR LETTER DESIGNATION FOR JOINT USED

GLAND MANUFACTURER _____
NAME AND ADDRESS (CITY, STATE)

SIZE OF GLAND _____

MANUFACTURER'S IDENTIFICATION _____
MFR'S No. AND/OR LETTER DESIGNATION FOR GLAND USED

ELASTOMERIC BEARING PADS

PAD MANUFACTURER _____
NAME AND ADDRESS (CITY, STATE)

SPECIAL SURFACE FINISH

SYSTEM: _____ COLOR: _____

FINISHING ROADWAY FACES OF BARRIER RAILING

TYPE: _____ COLOR: _____

ANTI-GRAFFITI COATING

MANUFACTURER _____
NAME AND ADDRESS (CITY, STATE)

PRODUCT NAME: _____ LOCATION: _____

PAINT SYSTEM

Mn/DOT SPECIFICATION NUMBER _____
2478 OR 2479 OR OTHER

MANUFACTURER _____
NAME AND ADDRESS (CITY, STATE)

PRIME COAT _____
Mn/DOT MATERIAL SPECIFICATION NUMBER

INTERMEDIATE COAT _____
Mn/DOT MATERIAL SPECIFICATION NUMBER

FINISH COAT _____ _____
Mn/DOT MATERIAL SPECIFICATION NUMBER COLOR

PLAN QUALITY

RATE 1 (AGREE), 2 (NEUTRAL), OR 3 (DISAGREE, PLEASE COMMENT BELOW)

DIMENSIONING AND DETAILING ADEQUATELY DESCRIBED REQUIRED CONSTRUCTION. _____
BAR LISTS AND QUANTITIES WERE TYPICALLY COMPLETE AND FREE OF ERRORS. _____
SCALE OF DRAWINGS AND OVERALL LEGIBILITY OF LINES AND TEXT WAS GOOD. _____
(SB) SPECIAL PROVISIONS ADEQUATELY DESCRIBED SPECIAL WORK AND PAYMENT. _____

COMMENTS: _____

NUMBER OF BRIDGE
SUPPLEMENTAL AGREEMENTS: _____ COST: $ _____

LIST SIGNIFICANT ERRORS OR OMISSIONS IN PLAN DETAILS OR PAY QUANTITIES IN THE SPACE PROVIDED AT RIGHT.

BRIDGE REMOVAL / BRIDGE OPENING

NUMBER OF AND DATE OLD BRIDGE WAS REMOVED (IF APPLICABLE):

BRIDGE NUMBER _____ DATE REMOVED _____

DATE NEW BRIDGE WAS OPENED TO TRAFFIC _____

NOTIFY THE BRIDGE OFFICE BRIDGE MANAGEMENT UNIT WITH THIS INFORMATION AS SOON AS POSSIBLE. (651) 366-4557

OTHER ITEMS ①

① UTILITIES ADDED DURING CONSTRUCTION AND SPECIALTY ITEMS.

FINAL QUANTITIES ENTERED ON SCHEDULE OF QUANTITIES: YES ☐ NO ☐

SUMMARY OF SIGNIFICANT AS-BUILT CHANGES

THE AS-BUILT INFORMATION WAS ADDED TO THE PLAN BY:

_____ _____
INSPECTOR(S) SIGNATURE DATE

CHECKED BY: _____ _____
PROJECT ENGINEER/SUPERVISOR SIGNATURE DATE

AT THE TIME OF THE FINAL, THIS COMPLETED AS-BUILT BRIDGE DATA SHEET MUST BE SUBMITTED TO THE BRIDGE OFFICE - ATTN: REGIONAL CONSTRUCTION ENGINEER (MS610).

AS-BUILT DETAILS
(AS NEEDED)

REVISION:

APPROVED: NOVEMBER 6, 2013
Nancy Daubenberger
STATE BRIDGE ENGINEER

CERTIFIED BY _____ 7/13/15
LICENSED PROFESSIONAL ENGINEER DATE
NAME: ENGINEER LIC. NO. #####

TITLE: AS-BUILT BRIDGE DATA

DES: DR: CHK: CHK:

APPROVED:

FIG. 5-397.900

SHEET NO. 31 OF 39 SHEETS

BRIDGE NO. R0693

Jan. 16 2016 10:13 am V:\3400_ADC\CAD\SEGMENT E3\PLAN SHEETS\STRUCTURES\R0693 CLCH-LRT\CBRR0693-BRG-DTL-003.dwg By: Nick.Williamson

CONTRACTED PROFILE

SCALE HOR: 0 50'

SCALE VER: 0 10'

PROFILE GRADE TRACK 2 (EB–TRK–E3)

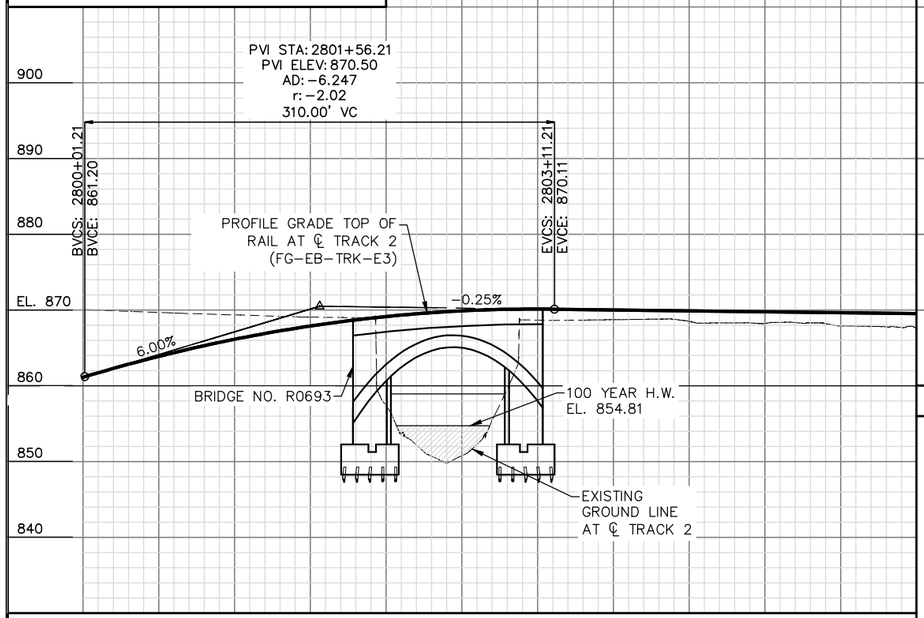

PROFILE GRADE ℄ KENILWORTH CHANNEL (℄ KENILWORTH CHANNEL)

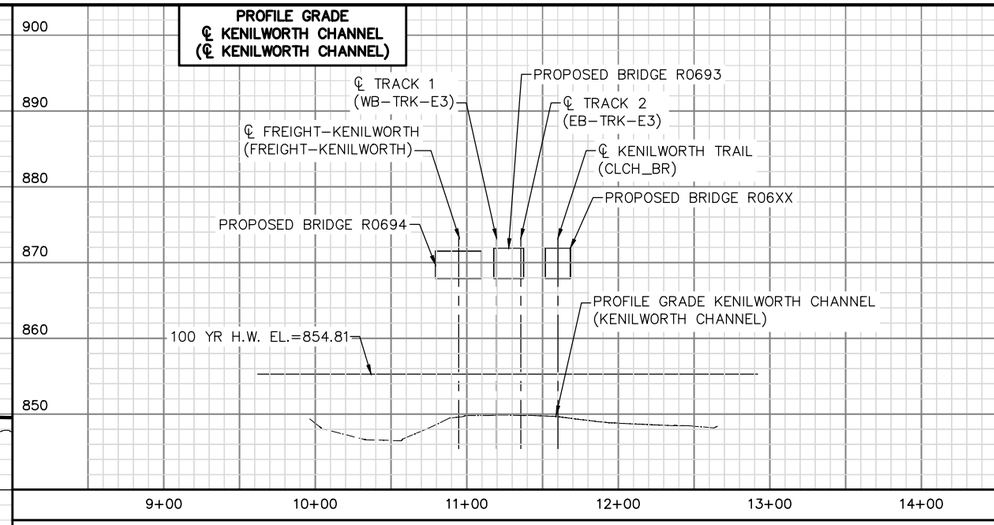

PLAT

SCALE: 0 50'

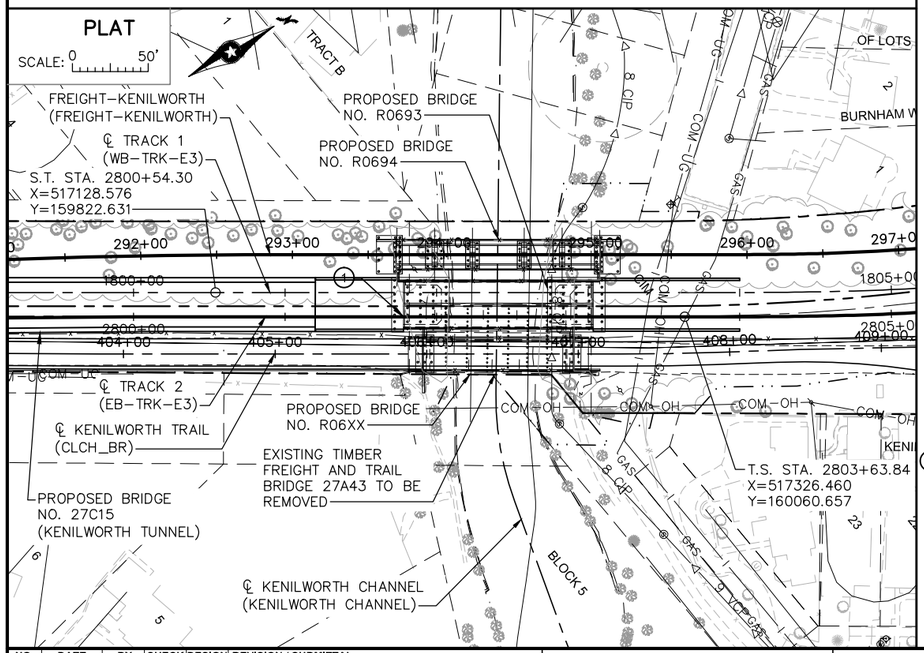

NOTES:

IN PLACE EXISTING TIMBER FREIGHT AND TRAIL BRIDGE 27A43 TO BE REMOVED.

THE SUBSURFACE UTILITY INFORMATION IN THIS PLAN IS UTILITY QUALITY LEVEL D. THIS UTILITY QUALITY LEVEL WAS DETERMINED ACCORDING TO GUIDELINES OF CI/ASCE 38–02, ENTITLED "STANDARD GUIDELINES FOR THE COLLECTION AND DEPICTION OF EXISTING SUBSURFACE UTILITY DATA."

(1) CONTROL POINT:
℄ TRACK 2 STA. 2801+78.25
X = 517207.817
Y = 159917.946

INDEX MAP

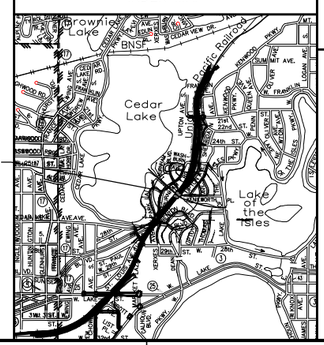

LOCATION ENGINEER'S OBSERVATIONS AT BRIDGE SITE

1. SPECIAL FEATURES: WATERFALLS, DAMS, FLOODS, ICE, DEBRIS SLIDING BANKS, RECREATIONAL BOATING.
2. OTHER BRIDGES OR CULVERTS OVER THE SAME STREAM (PARTICULARY STRUCTURES WHICH CARRY HIGH WATER WITHOUT OVERFLOW OF ROADWAY): GIVEN LOCATION, TYPE, LENGTH, HEIGHT ABOVE HIGH WATER, CROSS–SECTIONAL AREA ETC.
3. APPARENT HIGHWATER ELEVATION OBTAINED FROM:
4. OTHER DATA: APPROX. VELOCITY OF WATER AT TIME OF SURVEY.

HYDRAULIC ENGINEER'S RECOMMENDATION

DATE: 5/28/2014

STREAM OR DITCH DESIGNATION CEDAR LAKE CHANNEL

DRAINAGE AREA 9.4 SQ. MI.

MAX FLOOD ON RECORD 855.43 FT (JULY 1997)

DESIGN FLOOD (100YR. FREQ.): TBD
HEADWATER ELEVATION: FT. 854.81
DESIGN MEAN VELOCITY THROUGH STRUCTURE TBD
TOTAL STAGE INCREASE 0.0 FT.
LOW MEMBER AT OR ABOVE ELEVATION 854.58 FT.

WATERWAY AREA REQUIRED BELOW ELEV. 854.81 = TBD
AT RIGHT ANGLES TO CHANNEL

BASIC FLOOD (100 YR. FREQ.) TBD
HEADWATER ELEVATION: 854.81
TOTAL STAGE INCREASE 0.0 FT.
MEAN VELOCITY THROUGH STRUCTURE TBD

FLOWLINE ELEVATION: TBD SKEW ANGLE: 0 DEG

ESTIMATED PRLIMINARY TOTAL SCOUR AT PIER EL. TBD
(500 YR. FREQ.)

SCOUR CONFIRMATION RECOMMENDATION

DATE: 5/28/2014

TOTAL SCOUR AT PIER EL. TBD (500 YR. FREQ.)
SCOUR CODE: L – STABLE – EVAL

BRIDGE SURVEY SHEETS MADE FROM 2014 MFRA SURVEYS

1ST BENCH MARK (NAVD 88)
BENCHMARK ID PT. 183
ELEVATION = 869.09
N = 159916.74, E = 517227.56
DESCRIPTION = MAG NAIL IN BIT. PATH

2ND BENCH MARK (NAVD 88)
BENCHMARK ID PT. 184
ELEVATION = 867.99
N = 160069.02, E = 517359.05
DESCRIPTION = MAG NAIL IN BIT. PATH

BRIDGE SURVEY 1

SOUTHWEST LRT OVER CEDAR LAKE CHANNEL BETWEEN LAKE OF THE ISLES AND CEDAR LAKE IN MINNEAPOLIS

SEC 32 T 29N R 24W

CITY OF MINNEAPOLIS HENNEPIN COUNTY

BRIDGE NO. R0693

NO.	DATE	BY	CHECK	DESIGN	REVISION / SUBMITTAL

DESIGNED BY: NRW CHECKED BY: JSM
DRAWN BY: PGR CHECKED BY: NRW

AECOM Kimley»Horn

90% SUBMISSION - 01/22/16

METROPOLITAN COUNCIL

SOUTHWEST Green Line LRT Extension

CIVIL - VOLUME 4F
CEDAR LAKE CHANNEL LRT BRIDGE
BRIDGE R0693
BRIDGE SURVEY 1

DISCIPLINE: STRUCTURES

SHEET NAME: CBRR0693-BRG-SUR-001

SHEET 32 OF 39

Jan, 16 2016 10:19 am V:\3400_ADC\CAD\SEGMENT E3\PLAN SHEETS\STRUCTURES\R0693 CLCH–LRT\CBRR0693–BRG–SUR–001.dwg By: Nick.Williamson

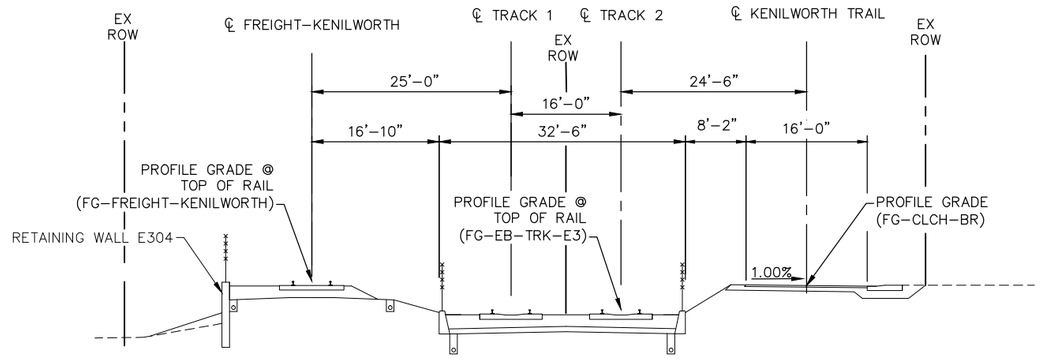

TYPICAL APPROACH SECTION AT BEGIN BRIDGE

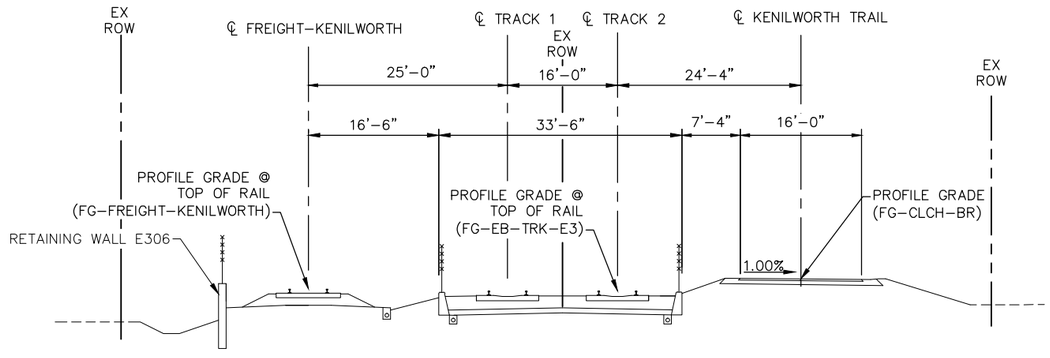

TYPICAL APPROACH SECTION AT END BRIDGE

NO.	DATE	BY	CHECK	DESIGN	REVISION / SUBMITTAL

DESIGNED BY: NRW | CHECKED BY: JSM
DRAWN BY: PGR | CHECKED BY: NRW

AECOM Kimley»Horn

90% SUBMISSION - 01/22/16

METROPOLITAN COUNCIL

SOUTHWEST Green Line LRT Extension

CIVIL - VOLUME 4F
CEDAR LAKE CHANNEL LRT BRIDGE
BRIDGE R0693
BRIDGE SURVEY 2

DISCIPLINE: STRUCTURES
SHEET NAME: CBRR0693-BRG-SUR-002

SHEET 33 OF 39

Jan, 16 2016 10:20 am V:\3400_ADC\CAD\SEGMENT E3\PLAN SHEETS\STRUCTURES\R0693 CLCH-LRT\CBRR0693-BRG-SUR-002.dwg By: Nick.Williamson

℄ FREIGHT–KENILWORTH
(FREIGHT–KENILWORTH)

332+00

333+00

334+00

CEDAR LAKE CHANNEL

BEGIN BRIDGE
STA. 2801+78.92

END BRIDGE
STA. 2803+02.58

S. ABUT. FOOTING

N. ABUT. FOOTING

TEST PILE NO. 1

TEST PILE NO. 2

2802+00

2803+00

2804+00

℄ TRACK 2
(EB–TRK–E3)
AND WORKING LINE

1006 SB
STA. 2802+94.78
9' RT. OF ℄ TRACK 2

EXISTING TIMBER FREIGHT
AND TRAIL BRIDGE 27A43

10+00

11+00

12+00

℄ KENILWORTH TRAIL
(CLCH_BR)

1005 SB
STA. 2801+92.47
17' RT. OF ℄ TRACK 2

℄ KENILWORTH CHANNEL
(KENILWORTH CHANNEL)

COM–OH

GAS

NOTES:

THE SUBSURFACE UTILITY INFORMATION IN THIS PLAN IS UTILITY QUALITY LEVEL D. THIS UTILITY QUALITY LEVEL WAS DETERMINED ACCORDING TO GUIDELINES OF CI/ASCE 38–02, ENTITLED "STANDARD GUIDELINES FOR THE COLLECTION AND DEPICTION OF EXISTING SUBSURFACE UTILITY DATA".

NO.	DATE	BY	CHECK	DESIGN	REVISION / SUBMITTAL

DESIGNED BY: NRW | CHECKED BY: JSM
DRAWN BY: PGR | CHECKED BY: NRW

AECOM Kimley»Horn

90% SUBMISSION - 01/22/16

METROPOLITAN COUNCIL

SOUTHWEST Green Line LRT Extension

CIVIL - VOLUME 4F
CEDAR LAKE CHANNEL LRT BRIDGE
BRIDGE R0693
BRIDGE SURVEY PLAN

DISCIPLINE: STRUCTURES

SHEET NAME: CBRR0693-BRG-BOR-001

SHEET 34 OF 39

Jan, 16 2016 10:22 am V:\3400_ADC\CAD\SEGMENT E3\PLAN SHEETS\STRUCTURES\R0693 CLCH-LRT\CBRR0693-BRG-BOR-001.dwg By: Nick.Williamson

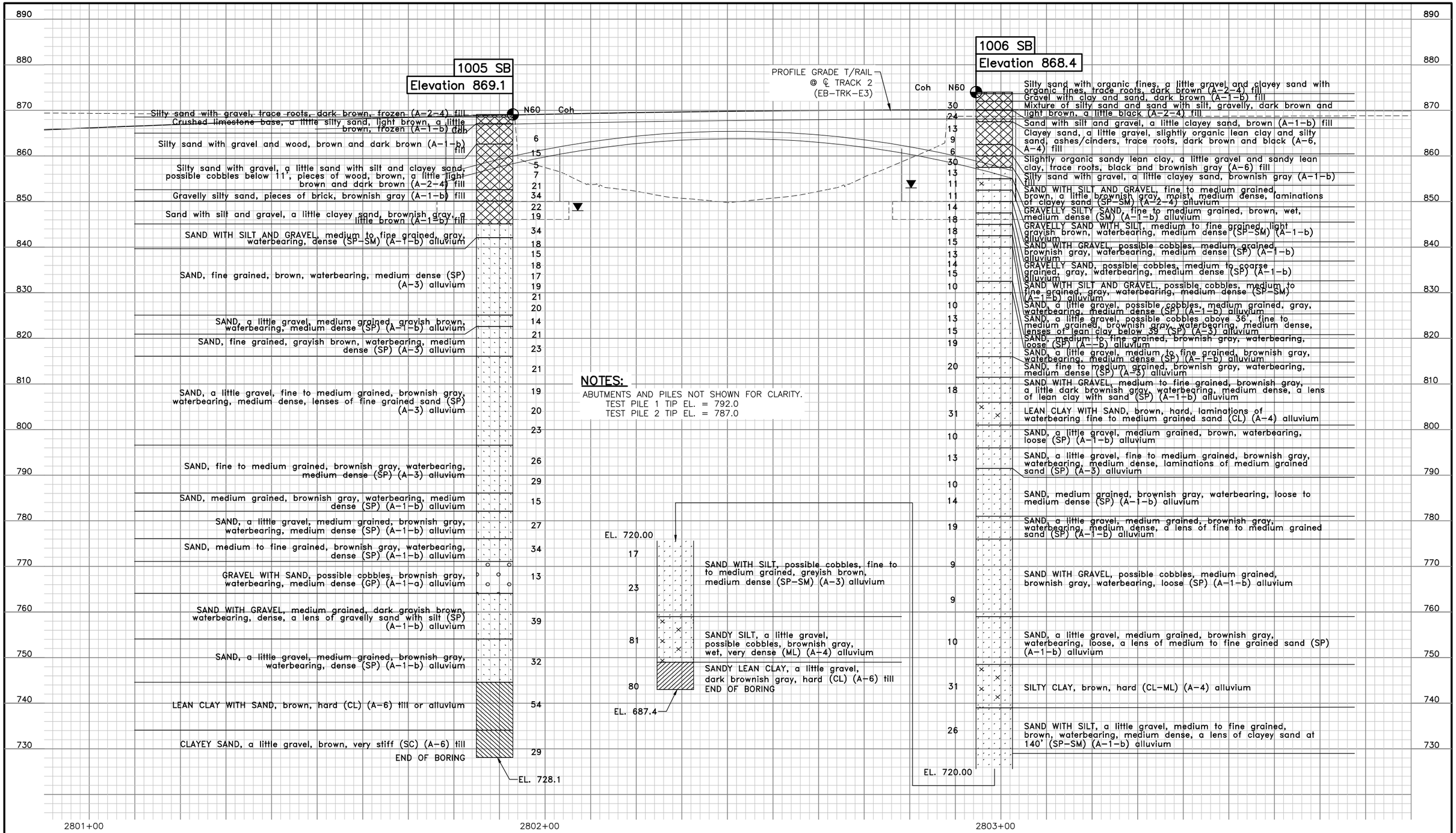

NOTES:

ABUTMENTS AND PILES NOT SHOWN FOR CLARITY.
TEST PILE 1 TIP EL. = 792.0
TEST PILE 2 TIP EL. = 787.0

NO.	DATE	BY	CHECK	DESIGN	REVISION / SUBMITTAL

DESIGNED BY: NRW | CHECKED BY: JSM
DRAWN BY: PGR | CHECKED BY: NRW

AECOM Kimley»Horn

90% SUBMISSION - 01/22/16

METROPOLITAN COUNCIL

SOUTHWEST Green Line LRT Extension

CIVIL - VOLUME 4F
CEDAR LAKE CHANNEL LRT BRIDGE
BRIDGE R0693
BRIDGE SURVEY PROFILE

DISCIPLINE: STRUCTURES
SHEET NAME: CBRR0693-BRG-BOR-002

SHEET 35 OF 39

Jan, 16 2016 10:23 am V:\3400_ADC\CAD\SEGMENT E3\PLAN SHEETS\STRUCTURES\R0693 CLCH-LRT\CBRR0693-BRG-BOR-002.dwg By: Nick.Williamson

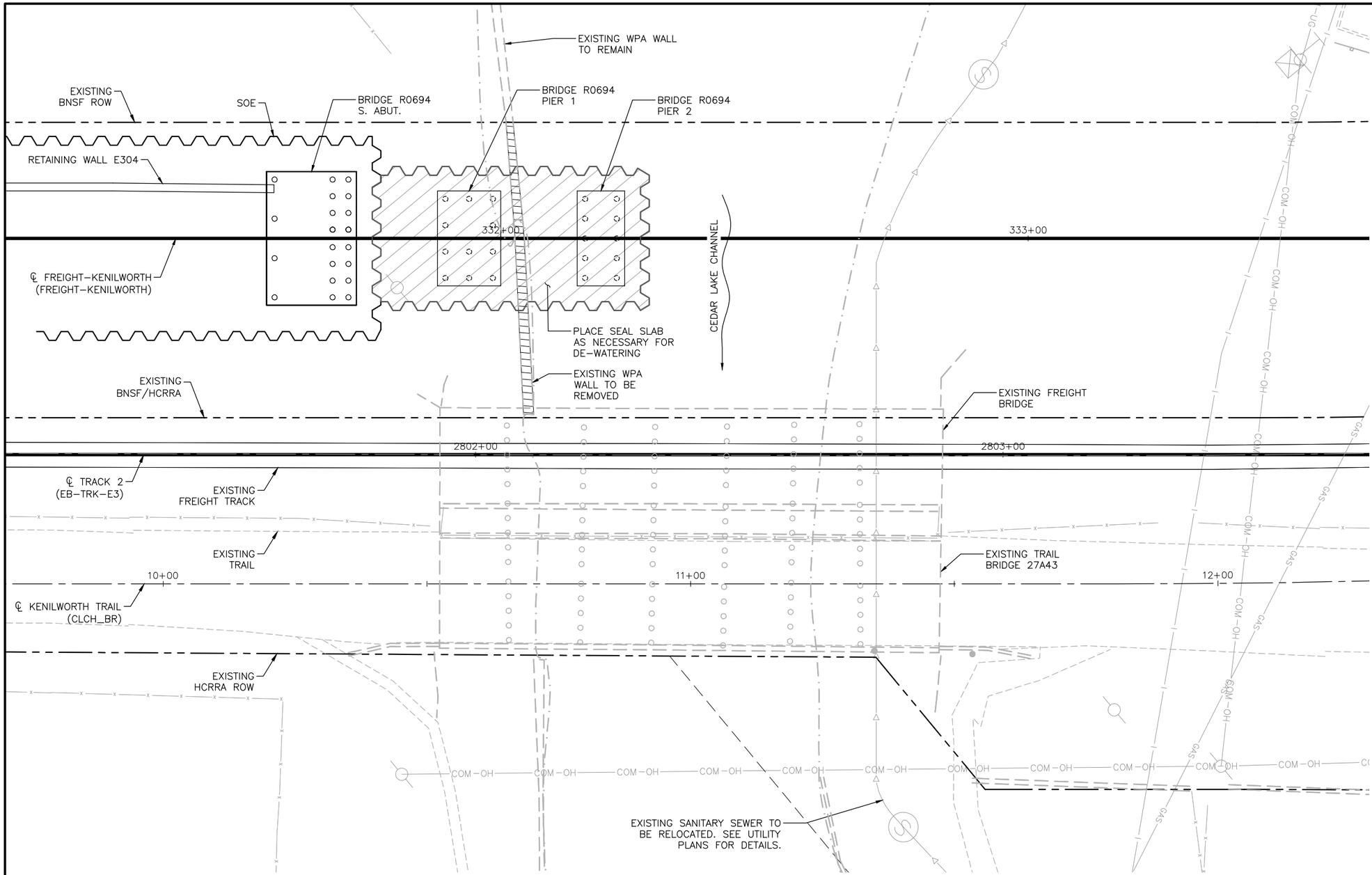

STAGING REQUIREMENTS:

ALL TRACKS SHALL BE KEPT OPEN FOR TRAIN USE DURING CONSTRUCTION EXCEPT WITH PRIOR APPROVAL.

A 25' WIDE HORIZONTAL CLEARANCE SHALL BE MAINTAINED IN THE CHANNEL EXCEPT AS NOTED OTHERWISE.

WITHIN THE 25' WIDE HORIZONTAL CLEARANCE, NO CONSTRUCTION MATERIAL (INCLUDING FORMWORK) MAY EXTEND BELOW ELEVATION 863.03 EXCEPT AS NOTED OTHERWISE.

DURING CONSTRUCTION VIBRATIONS AT ADJACENT PROPERTIES SHALL BE MONITORED AND LIMITED.

STAGING NOTES:

MAINTAIN EXISTING FREIGHT AND TRAIL TRAFFIC ON BRIDGE 27A43.

SURVEY AND REMOVE EXISTING WPA WALL AS REQUIRED.

INSTALL SOE AS SHOWN FOR CONSTRUCTION OF SOUTH PORTION OF BRIDGE R0694.

EXCAVATE AS NECESSARY TO CONSTRUCT RETAINING WALL E304 AND SOUTH PORTION OF BRIDGE R0694.

CONSTRUCT RETAINING WALL E304 AND SOUTH PORTION OF BRIDGE R0694.

BACKFILL STRUCTURE. REMOVE SOE.

PERFORM UTILITY WORK ON SANITARY SEWER AND WATER MAIN PER THE UTILITY PLAN.

PROPOSED CONSTRUCTION SEQUENCE
STAGE 1

NO.	DATE	BY	CHECK	DESIGN	REVISION / SUBMITTAL

DESIGNED BY: NRW | CHECKED BY: JSM
DRAWN BY: BAC | CHECKED BY: NRW

AECOM Kimley»Horn

90% SUBMISSION - 01/22/16

METROPOLITAN COUNCIL

SOUTHWEST Green Line LRT Extension

CIVIL - VOLUME 4F
CEDAR LAKE CHANNEL LRT BRIDGE
BRIDGE R0693
STAGING PLAN 1

DISCIPLINE: STRUCTURES
SHEET NAME: CBRR0693-BRG-STG-001

SHEET 36 OF 39

Jan, 16 2016 10:26 am V:\3400_ADC\CAD\SEGMENT E3\PLAN SHEETS\STRUCTURES\R0693 CLCH-LRT\CBRR0693-BRG-STG-001.dwg By: Nick.Williamson

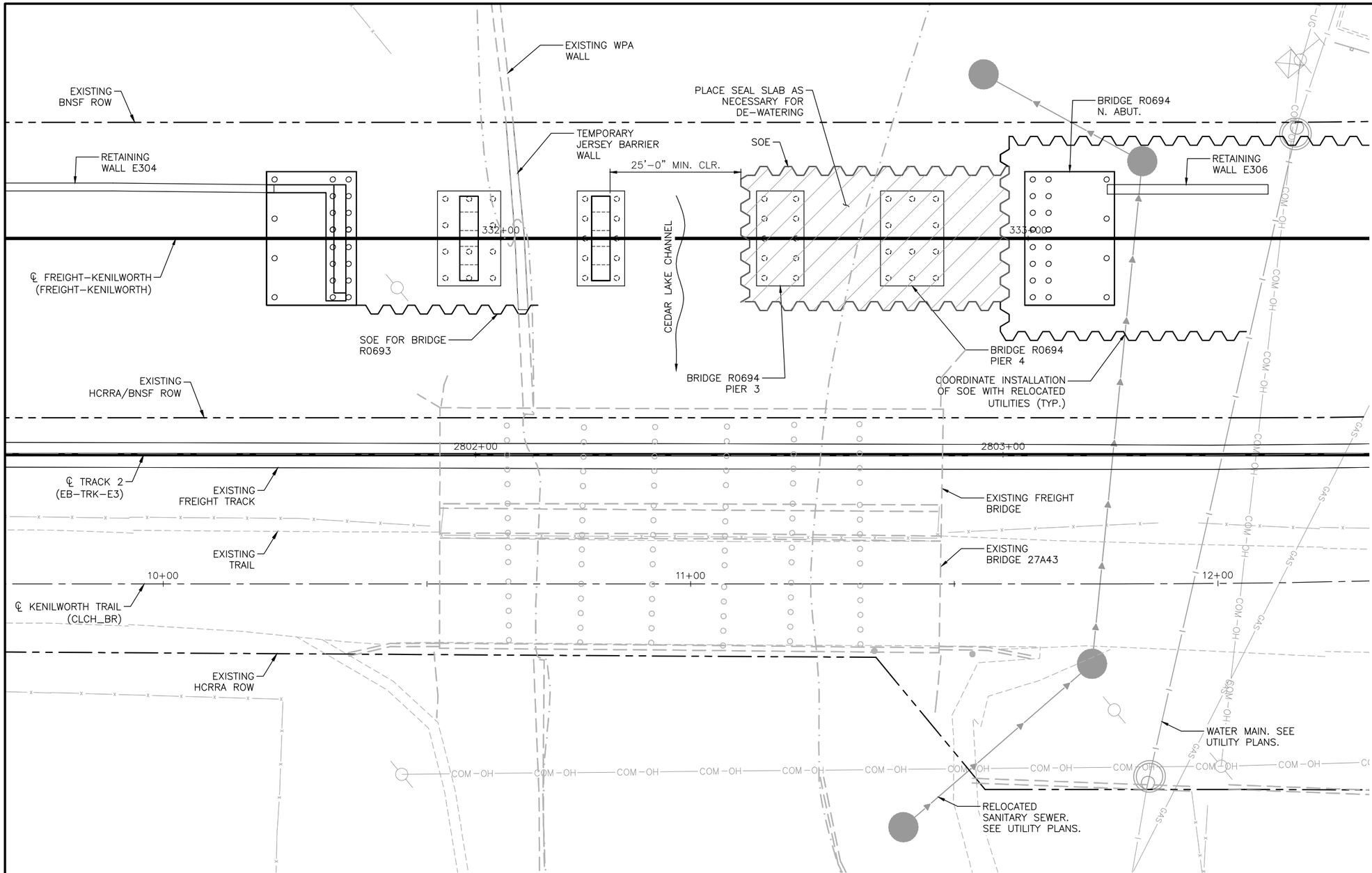

PROPOSED CONSTRUCTION SEQUENCE
STAGE 2

STAGING REQUIREMENTS:

ALL TRACKS SHALL BE KEPT OPEN FOR TRAIN USE DURING CONSTRUCTION EXCEPT WITH PRIOR APPROVAL.

A 25' WIDE HORIZONTAL CLEARANCE SHALL BE MAINTAINED IN THE CHANNEL EXCEPT AS NOTED OTHERWISE.

WITHIN THE 25' WIDE HORIZONTAL CLEARANCE, NO CONSTRUCTION MATERIAL (INCLUDING FORMWORK) MAY EXTEND BELOW ELEVATION 863.03 EXCEPT AS NOTED OTHERWISE.

DURING CONSTRUCTION VIBRATIONS AT ADJACENT PROPERTIES SHALL BE MONITORED AND LIMITED.

STAGING NOTES:

MAINTAIN EXISTING FREIGHT AND TRAIL TRAFFIC ON BRIDGE 27A43.

INSTALL SOE AS SHOWN FOR BRIDGE R0693 SOUTH ABUTMENT.

PLACE JERSEY BARRIER AT LOCATION OF WPA WALL FOR TEMPORARY RETAINMENT

INSTALL SOE FOR CONSTRUCTION OF NORTH PORTION OF BRIDGE R0694.

EXCAVATE AS NECESSARY TO CONSTRUCT RETAINING WALL E306 AND NORTH PORTION OF BRIDGE R0694.

CONSTRUCT RETAINING WALL E304 AND SOUTH PORTION OF BRIDGE R0694.

BACKFILL STRUCTURE. REMOVE SOE.

CONSTRUCT R0694 SUPERSTRUCTURE, BALLAST, AND RAIL. MOVE FREIGHT TRAFFIC TO BRIDGE R0694.

NO.	DATE	BY	CHECK	DESIGN	REVISION / SUBMITTAL

DESIGNED BY: NRW | CHECKED BY: JSM
DRAWN BY: BAC | CHECKED BY: NRW

AECOM Kimley»Horn

90% SUBMISSION - 01/22/16

METROPOLITAN COUNCIL

SOUTHWEST Green Line LRT Extension

CIVIL - VOLUME 4F
CEDAR LAKE CHANNEL LRT BRIDGE
BRIDGE R0693
STAGING PLAN 2

DISCIPLINE: STRUCTURES
SHEET NAME: CBRR0693-BRG-STG-002

SHEET 37 OF 39

Jan, 16 2016 10:29 am V:\3400_ADC\CAD\SEGMENT E3\PLAN SHEETS\STRUCTURES\R0693 CLCH-LRT\CBRR0693-BRG-STG-002.dwg By: Nick.Williamson

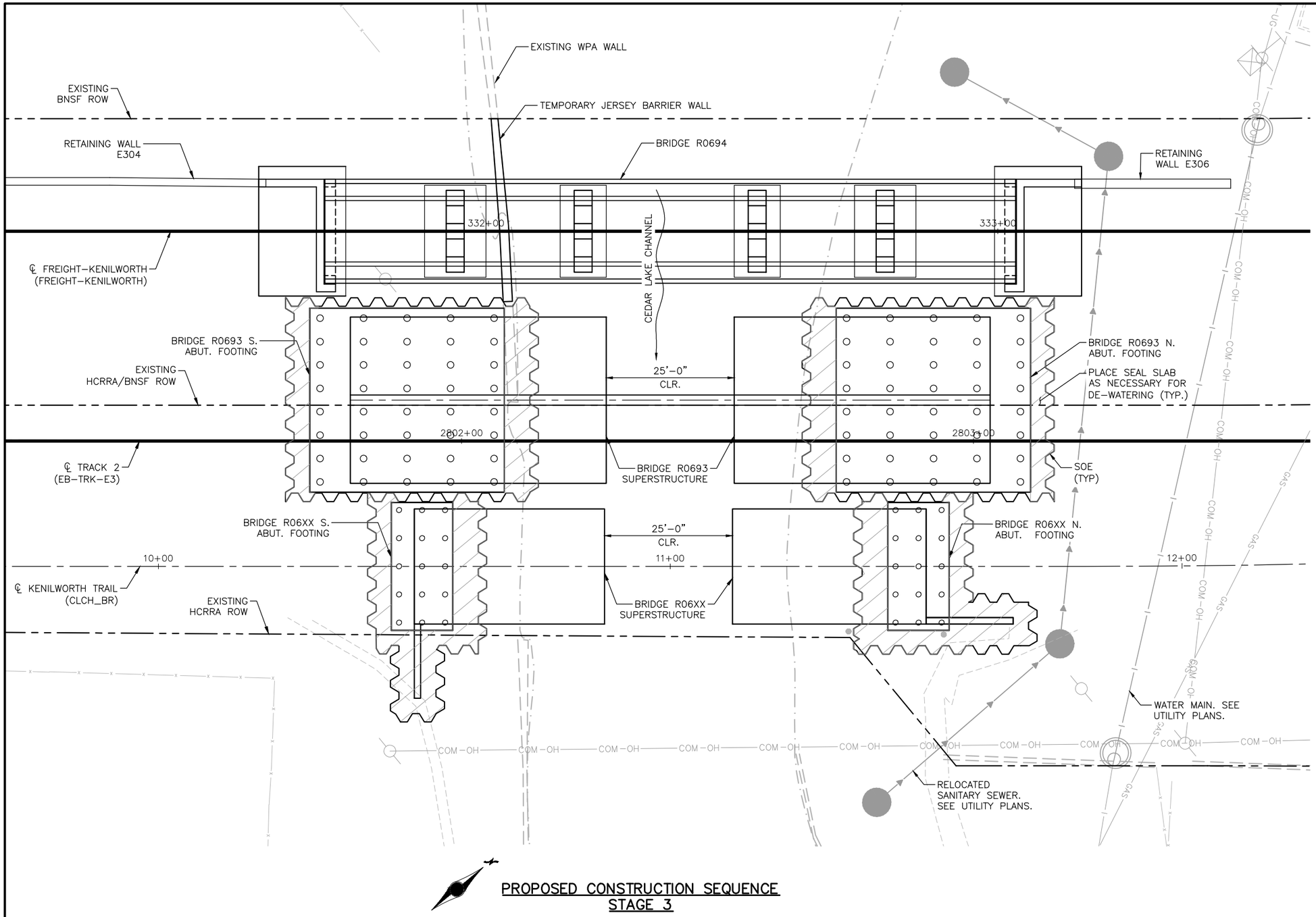

STAGING REQUIREMENTS:

ALL TRACKS SHALL BE KEPT OPEN FOR TRAIN USE DURING CONSTRUCTION EXCEPT WITH PRIOR APPROVAL.

A 25' WIDE HORIZONTAL CLEARANCE SHALL BE MAINTAINED IN THE CHANNEL EXCEPT AS NOTED OTHERWISE.

WITHIN THE 25' WIDE HORIZONTAL CLEARANCE, NO CONSTRUCTION MATERIAL (INCLUDING FORMWORK) MAY EXTEND BELOW ELEVATION 863.03 EXCEPT AS NOTED OTHERWISE.

DURING CONSTRUCTION VIBRATIONS AT ADJACENT PROPERTIES SHALL BE MONITORED AND LIMITED.

STAGING NOTES:

DETOUR TRAIL TRAFFIC. CONSTRUCT BRIDGE 27C15 (KENILWORTH TUNNEL)

REMOVE EXISTING FREIGHT TRACK, TRAIL, AND BRIDGE 27A43.

INSTALL SOE FOR CONSTRUCTION OF BRIDGES R0693 AND R06XX ABUTMENTS.

EXCAVATE AS NECESSARY TO CONSTRUCT BRIDGES R0693 AND R06XX ABUTMENTS.

CONSTRUCT BRIDGES R0693 AND R06XX ABUTMENTS WITH TEMPORARY STABILITY BRACKETS. (SEE ABUTMENT DETAILS).

REMOVE SOE AT FRONT FACE OF ABUTMENT. DO NOT BACKFILL BEHIND ABUTMENT..

INSTALL FALSEWORK IN CHANNEL TO SUPPORT SUPERSTRUCTURE END POURS.

CONSTRUCT SUPERSTRUCTURE END POURS FOR BRIDGES R0693 AND R06XX. FALSEWORK SHALL NOT BE REMOVED UNTIL CLOSURE POUR IS COMPLETE.

PROPOSED CONSTRUCTION SEQUENCE STAGE 3

NO.	DATE	BY	CHECK	DESIGN	REVISION / SUBMITTAL

DESIGNED BY: NRW | CHECKED BY: JSM
DRAWN BY: BAC | CHECKED BY: NRW

AECOM Kimley»Horn

90% SUBMISSION - 01/22/16

METROPOLITAN COUNCIL

SOUTHWEST Green Line LRT Extension

CIVIL - VOLUME 4F
CEDAR LAKE CHANNEL LRT BRIDGE
BRIDGE R0693
STAGING PLAN 3

DISCIPLINE: STRUCTURES
SHEET NAME: CBRR0693-BRG-STG-003

SHEET 38 OF 39

Jan, 16 2016 10:32 am V:\3400_ADC\CAD\SEGMENT E3\PLAN SHEETS\STRUCTURES\R0693 CLCH–LRT\CBRR0693–BRG–STG–003.dwg By: Nick.Williamson

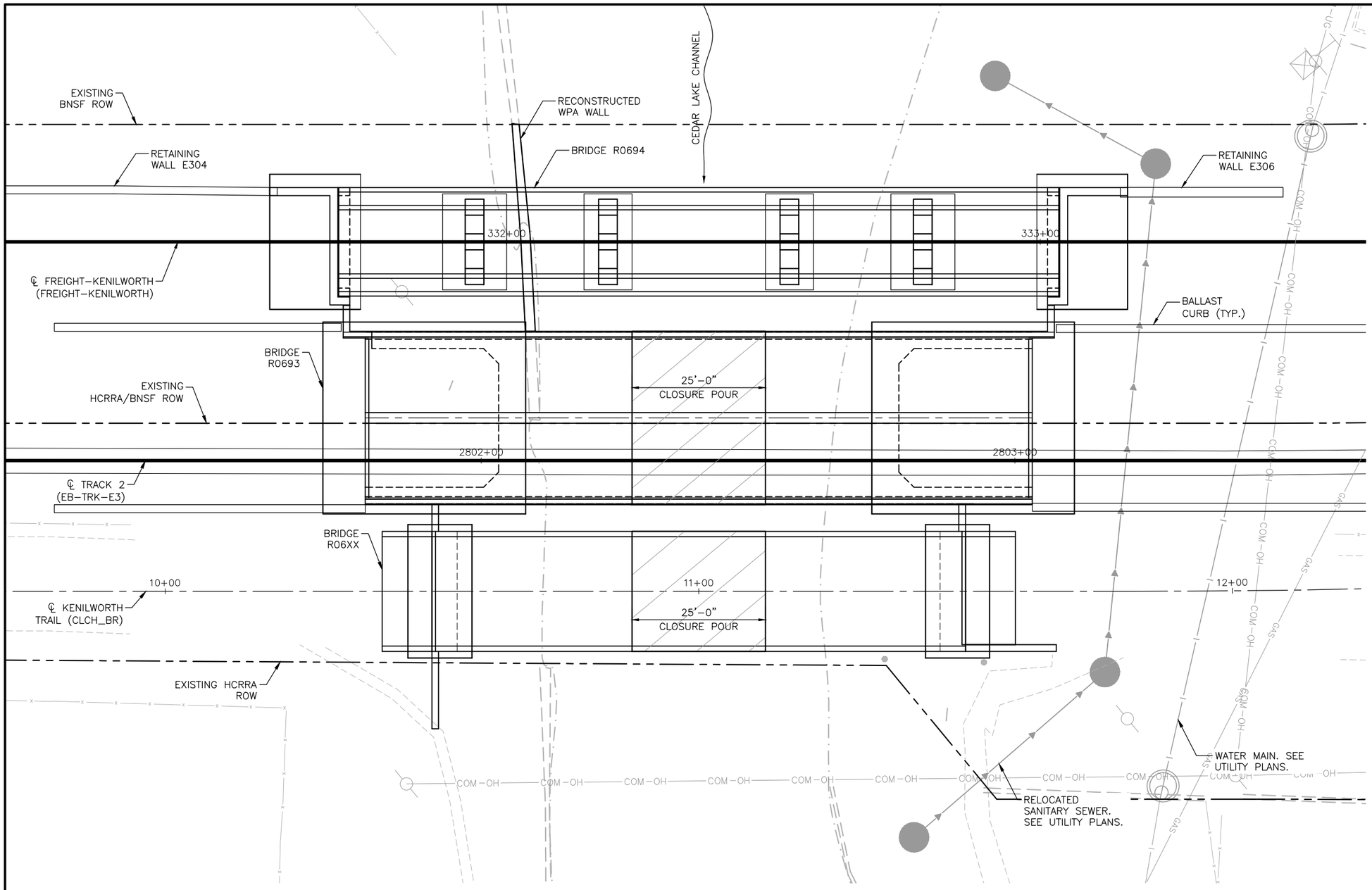

STAGING REQUIREMENTS:

ALL TRACKS SHALL BE KEPT OPEN FOR TRAIN USE DURING CONSTRUCTION EXCEPT WITH PRIOR APPROVAL.

A 25' WIDE HORIZONTAL CLEARANCE SHALL BE MAINTAINED IN THE CHANNEL EXCEPT AS NOTED OTHERWISE.

WITHIN THE 25' WIDE HORIZONTAL CLEARANCE, NO CONSTRUCTION MATERIAL (INCLUDING FORMWORK) MAY EXTEND BELOW ELEVATION 863.03 EXCEPT AS NOTED OTHERWISE.

DURING CONSTRUCTION VIBRATIONS AT ADJACENT PROPERTIES SHALL BE MONITORED AND LIMITED.

DURING THE CLOSURE POUR, A 20' WIDE HORIZONTAL CLEARANCE SHALL BE MAINTAINED. WITHIN THIS 20 FT. HORIZONTAL CLEARANCE, NO CONSTRUCTION MATERIAL MAY EXTEND BELOW EXCAVATION 862.03.

STAGING NOTES:

TEMPORARILY REDUCE ALLOWABLE CLEARANCES AS NOTED ABOVE. INSTALL CLOSURE POUR FORMWORK FOR BRIDGES R0694 AND R06XX. CLOSURE POUR FORMWORK SHALL SPAN OVER THE CHANNEL SUCH THAT THE REDUCED CLEARANCE ENVELOPE IS MAINTAINED.

CONSTRUCT CLOSURE POURS FOR BRIDGES R0693 AND R06XX.

REMOVE TEMP. STABILITY BRACKETS. REMOVE SOE. BACKFILL STRUCTURES.

REMOVE ALL FORMWORK AND FALSEWORK.

CONSTRUCT TRAIL, BALLAST WALLS, BALLAST, TRACK.

SHIFT TRAIL TRAFFIC TO NEW BRIDGE R06XX. REOPEN TO PEDESTRIANS.

RECONSTRUCT WPA WALLS AS REQUIRED.

PROPOSED CONSTRUCTION SEQUENCE STAGE 4

NO.	DATE	BY	CHECK	DESIGN	REVISION / SUBMITTAL

DESIGNED BY: NRW | CHECKED BY: JSM
DRAWN BY: BAC | CHECKED BY: NRW

AECOM Kimley»Horn

90% SUBMISSION - 01/22/16

METROPOLITAN COUNCIL

SOUTHWEST Green Line LRT Extension

CIVIL - VOLUME 4F
CEDAR LAKE CHANNEL LRT BRIDGE
BRIDGE R0693
STAGING PLAN 4

DISCIPLINE: STRUCTURES
SHEET NAME: CBRR0693-BRG-STG-004

SHEET 39 OF 39

Jan, 16 2016 10:34 am V:\3400_ADC\CAD\SEGMENT E3\PLAN SHEETS\STRUCTURES\R0693 CLCH-LRT\CBRR0693-BRG-STG-004.dwg By: Nick.Williamson

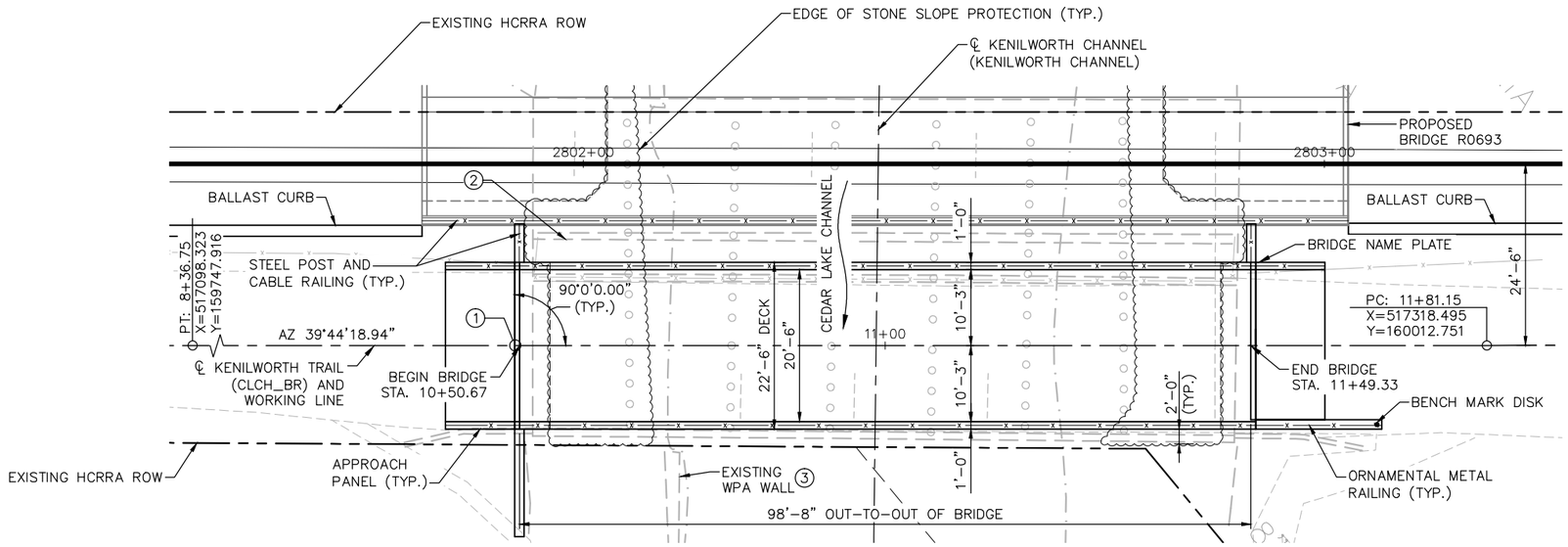

NOTES:

SEE BRIDGE SURVEY SHEET FOR IN PLACE UTILITIES.

SEE STAGING PLAN FOR SOE.

HATCHED AREA TO BE REMOVED.

① CONTROL POINT 1
℄ KENILWORTH TRAIL (CLCH_BR) STA. 10+50.00
X = 517234.649
Y = 159911.897

② IN PLACE BRIDGE 27A43, A 45'-8" WIDE X 92'-0" LONG TIMBER FREIGHT AND TRAIL BRIDGE TO BE REMOVED. SEE STAGING PLANS FOR REMOVAL NOTES.

GENERAL PLAN

0 5' 10' 20'

SCALE IN FEET

③ SEE STAGING PLANS FOR LIMITS OF WPA WALL REMOVAL AND RECONSTRUCTION.

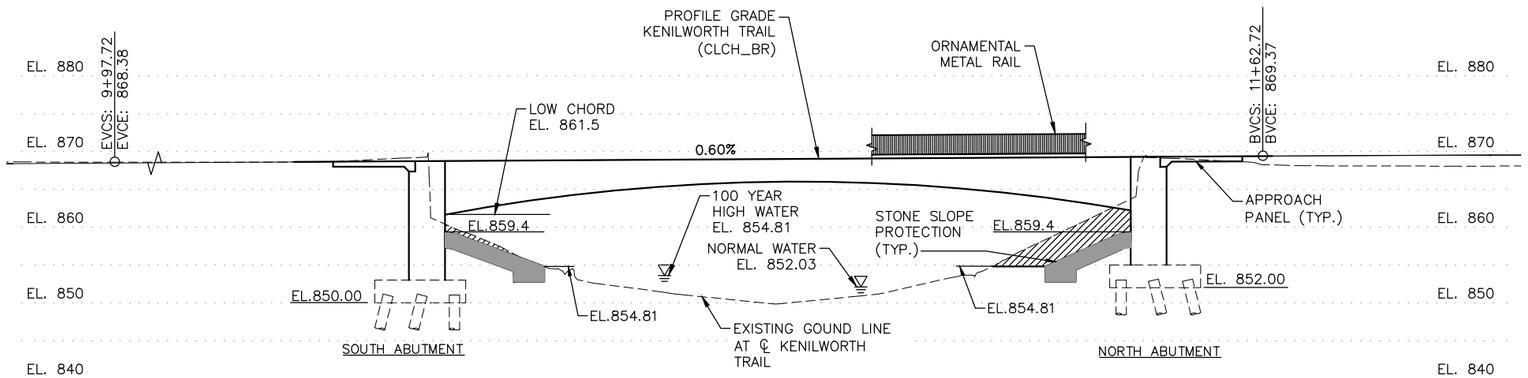

GENERAL ELEVATION

0 5' 10' 20'

SCALE IN FEET

DESIGN DATA

AASHTO LRFD BRIDGE DESIGN SPECIFICATIONS 7TH EDITION, 2014 WITH 2015 INTERIM REVISIONS

2009 INCLUDING 2014 INTERIMS AASHTO LRFD GUIDE SPECIFICATIONS FOR THE DESIGN OF PEDESTRIAN BRIDGES

SOUTHWEST LIGHT RAIL TRANSIT DESIGN CRITERIA (REVISION 4.0)

LOAD AND RESISTANCE FACTOR DESIGN METHOD

90 PSF PEDESTRIAN LIVE LOAD
H 10 MAINTENANCE VEHICLE LIVE LOAD
MINNEAPOLIS FIRE DEPARTMENT APPARATUS LIVE LOAD
(80k TOTAL WEIGHT, 60k AXLE WEIGHT)

MATERIAL DESIGN PROPERTIES:
REINFORCED CONCRETE:

ABUTMENTS
f'c = 4 KSI n = 8
fy = 60 KSI REINFORCEMENT

SUPERSTRUCTURE
f'c = 6 KSI n = 6
fy = 60 KSI REINFORCEMENT

DESIGN SPEED: OVER = 20 MPH

DECK AREA = 2220 SQ. FT.

LIST OF SHEETS

NO.	DESCRIPTION
1	GENERAL PLAN AND ELEVATION
2	TRANSVERSE SECTION & QUANTITIES
3	BRIDGE LAYOUT
4–6	SOUTH ABUTMENT DETAILS
7–10	SOUTH ABUTMENT REINFORCEMENT
11–14	NORTH ABUTMENT DETAILS
15–19	NORTH ABUTMENT REINFORCEMENT
20–26	SUPERSTRUCTURE DETAILS & REINFORCEMENT
27	ORNAMENTAL METAL RAIL DETAILS
28–29	APPROACH PANEL DETAILS & REINF.
30	STONE SLOPE PROTECTION DETAILS
31–32	BRIDGE DETAILS
33	AS-BUILT BRIDGE DATA
34–35	BRIDGE SURVEY
36	BRIDGE SURVEY PLAN
37	BRIDGE SURVEY PROFILE
38–41	STAGING PLANS

BRIDGE NO. R06XX

KENILWORTH TRAIL OVER CEDAR LAKE CHANNEL BETWEEN LAKE OF THE ISLES AND CEDAR LAKE IN MINNEAPOLIS

100'-0" CAST-IN-PLACE CONCRETE BRIDGE
20'-6" CLEAR TRAIL, 00°-00'-00.0" SKEW

BRIDGE I.D. NO. XXX

GENERAL PLAN AND ELEVATION

SEC 32 T 29N R 24W
CITY OF MINNEAPOLIS HENNEPIN COUNTY

JOB NO.: T9N635 | STATE PROJ. NO.: 9909-01 | MNDOT REVIEW: JOE NIETFELD

NO.	DATE	BY	CHECK	DESIGN	REVISION / SUBMITTAL

DESIGNED BY: NRW | CHECKED BY: JSM
DRAWN BY: PGR | CHECKED BY: NRW

AECOM Kimley»Horn

90% SUBMISSION - 01/22/16

METROPOLITAN COUNCIL | SOUTHWEST Green Line LRT Extension

CIVIL - VOLUME 4F
CEDAR LAKE CHANNEL TRAIL BRIDGE
BRIDGE R06XX
GENERAL PLAN AND ELEVATION

DISCIPLINE: STRUCTURES
SHEET NAME: CBRR06XX-BRG-GPE-001

SHEET 1 OF 41

Jan, 16 2016 10:38 am V:\3400_ADC\CAD\SEGMENT E3\PLAN SHEETS\STRUCTURES\R06XX CLCH-TRL\CBRR06XX-BRG-GPE.dwg By: Nick.Williamson

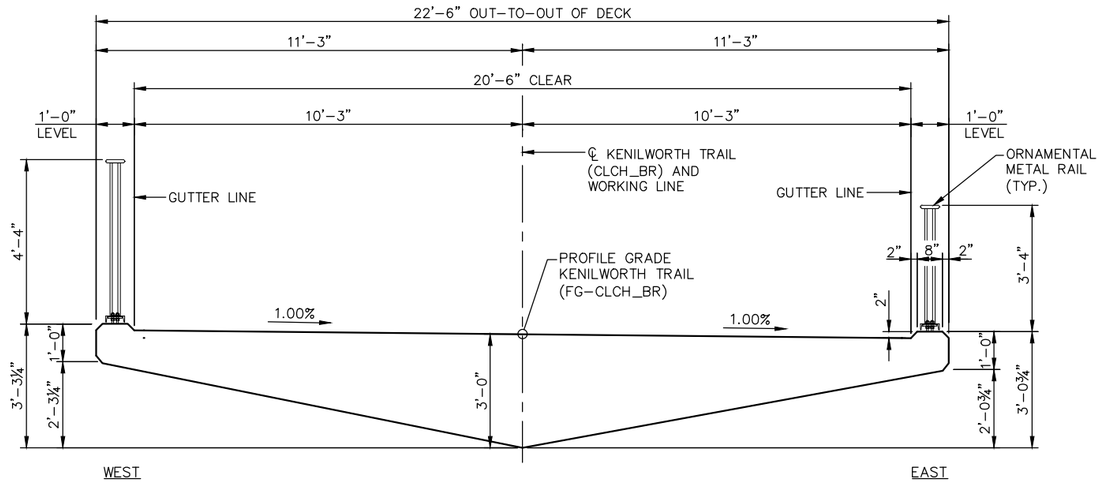

TRANSVERSE SECTION AT MIDSPAN

(LOOKING IN DIRECTION OF STATIONING)

0' 1' 2' 4'

SCALE IN FEET

CONSTRUCTION NOTES:

THE 2016 EDITION OF THE MINNESOTA DEPARTMENT OF TRANSPORTATION "STANDARD SPECIFICATIONS FOR CONSTRUCTION" SHALL GOVERN.

THE BAR SIZES SHOWN IN THIS PLAN ARE IN U.S. CUSTOMARY DESIGNATIONS. THE FIRST DIGIT OR THE FIRST TWO DIGITS OF EACH BAR MARK INDICATE THE BAR SIZE.

BARS MARKED WITH THE SUFFIX "E" SHALL BE EPOXY COATED IN ACCORDANCE WITH SPEC. 3301.

THE SUBSURFACE UTILITY INFORMATION IN THIS PLAN IS UTILITY QUALITY LEVEL D. THIS UTILITY QUALITY LEVEL WAS DETERMINED ACCORDING TO THE GUIDELINES OF CI/ASCE 38-02, ENTITLED "STANDARD GUIDELINES FOR THE COLLECTION AND DEPICTION OF EXISTING SUBSURFACE UTILITY DATA". (1)

THE PILE LOADS SHOWN IN THE PLANS AND THE CORRESPONDING NOMINAL PILE BEARING RESISTANCE (Rn) WERE COMPUTED USING LRFD METHODOLOGY. PILE BEARING RESISTANCE DETERMINED IN THE FIELD SHALL INCORPORATE THE METHODS AND/OR FORMULAS DESCRIBED IN THE SPECIAL PROVISIONS.

GROUNDING NOTES:

SEE SHEETS ELE-SITE-SCH-504, ELE-SITE-DTL-600, ELE-SITE-DTL-601 AND ELE-SITE-DTL-602 FOR ADDITIONAL FENCE GROUNDING INFORMATION. FOR BRIDGES, ABUTMENTS AND RETAINING WALLS THAT DON'T HAVE STRAY CURRENT SYSTEMS, GROUND THE FENCE AS SHOWN IN THE RAILING DETAIL.

SCHEDULE OF QUANTITIES			
SPEC. SECTION	ITEM	UNIT	QUANTITY
---	CONSTRUCT BRIDGE R06XX	LUMP SUM	LS

COMPONENT ITEMS SUMMARY (BRIDGE R06XX)			
SPEC. SECTION (3)	COMPONENT ITEM	UNIT (2)	QUANTITY (2)
2401	STRUCTURAL CONCRETE (1G52)	CU. YD.	
2401	STRUCTURAL CONCRETE (3B52)	CU. YD.	
2401	STRUCTURAL CONCRETE (3JM)	CU. YD.	
2401	REINFORCEMENT BARS	POUND	
2401	REINFORCEMENT BARS (EPOXY COATED)	POUND	
SB-XX	ARCHITECTURAL SURFACE FINISH (SINGLE COLOR)	SQ. FT.	
2452	C-I-P CONCRETE PILING INSTALLED 12"	LIN. FT.	
2452	C-I-P CONCRETE TEST PILE 98 FT LONG 12"	EACH	
2452	C-I-P CONCRETE TEST PILE 117 FT LONG 12"	EACH	
2502	DRAINAGE SYSTEM (TYPE B910)	EACH	
SB-XX	STONE SLOPE PROTECTION	CU. YD.	
2511	GEOTEXTILE FILTER TYPE VII	SQ. YD.	
SB-XX	ORNAMENTAL METAL RAILING	LIN. FT.	
SB-XX	STEEL POST-AND-CABLE RAILING	LIN. FT.	

(1) A BENCH MARK IS REQUIRED. LOCATED AT NE CORNER OF THE BRIDGE. STATE WILL FURNISH DISK. BEND PRONGS OUTWARD TO ANCHOR DISK IN CONCRETE. BOTTOM OF DISK TOP TO BE PLACED FLUSH WITH CONCRETE.

(2) QUANTITIES LISTED FOR THE COMPONENT ITEMS OF THE LUMP SUM BR R06XX ARE FOR INFORMATION PURPOSES. ANY ADDITIONAL ITEMS OR CHANGES IN QUANTITIES REQUIRED SHALL BE PROVIDED BY THE CONTRACTOR WITH NO ADDITIONAL COMPENSATION.

(3) MEASUREMENT AND PAYMENT FOR COMPONENT ITEMS SHALL BE PART OF THE LUMP SUM PAYMENT FOR BR R06XX. REFER TO MNDOT STANDARD SPECIFICATION OR SPECIAL PROVISION FOR TECHNICAL SPECIFICATION REQUIREMENTS FOR ALL PROVISION OTHER THAN MEASUREMENT AND PAYMENT REQUIREMENTS.

Jan, 16 2016 10:38 am V:\3400_ADC\CAD\SEGMENT E3\PLAN SHEETS\STRUCTURES\R06XX CLCH-TRL\CBRR06XX-BRG-TRN.dwg By: Nick.Williamson

NO.	DATE	BY	CHECK	DESIGN	REVISION / SUBMITTAL

DESIGNED BY: NRW CHECKED BY: JSM

DRAWN BY: PGR CHECKED BY: NRW

AECOM Kimley»Horn

90% SUBMISSION - 01/22/16

METROPOLITAN COUNCIL

SOUTHWEST Green Line LRT Extension

CIVIL - VOLUME 4F
CEDAR LAKE CHANNEL TRAIL BRIDGE
BRIDGE R06XX
TRANSVERSE SECTION & QUANTITIES

DISCIPLINE: STRUCTURES

SHEET NAME: CBRR06XX-BRG-TRN-001

SHEET 2 OF 41

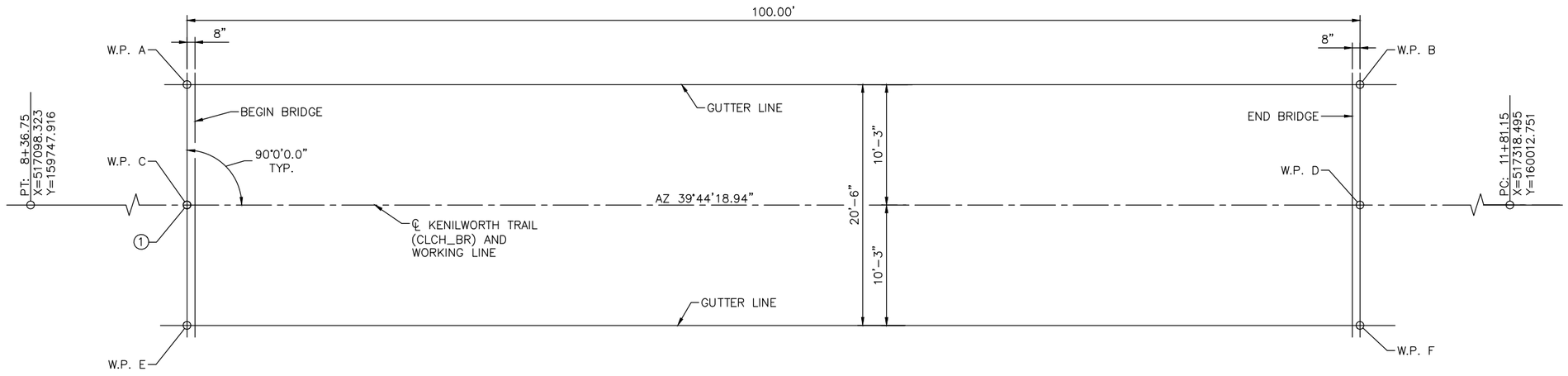

WORKING POINT LAYOUT

NOTES:

SUBSTRUCTURES SET PARALLEL AT
Δ =129°44'18.9"

(1) CONTROL POINT
℄ KENILWORTH TRAIL (CLCH_BR)
BEGIN BRIDGE STA 10+50.00
X = 517234.649
Y = 159911.897

DIMENSIONS BETWEEN WORKING POINTS								COORDINATES		ELEVATIONS	
POINT	STATION	A	B	C	D	E	F	X	Y	TOP OF SLAB	POINT
A	10+50.00		100.00	10.25	100.52		102.08	517226.767	159918.450	868.79	A
B	11+50.00				10.25	102.08		517290.696	159995.347	869.39	B
C	10+50.00					10.25	100.52	517234.649	159911.897	868.69	C
D	11+50.00						10.25	517298.578	159988.794	869.29	D
E	10+50.00						100.00	517242.531	159905.345	868.59	E
F	11+50.00							517306.460	159982.241	869.19	F

NO.	DATE	BY	CHECK	DESIGN	REVISION / SUBMITTAL

DESIGNED BY: NRW CHECKED BY: JSM
DRAWN BY: PGR CHECKED BY: NRW

AECOM Kimley»Horn

90% SUBMISSION - 01/22/16

METROPOLITAN COUNCIL

SOUTHWEST Green Line LRT Extension

CIVIL - VOLUME 4F
CEDAR LAKE CHANNEL TRAIL BRIDGE
BRIDGE R06XX
BRIDGE LAYOUT

DISCIPLINE: STRUCTURES
SHEET NAME: CBRR06XX-BRG-LYT-001

SHEET 3 OF 41

Jan, 16 2016 10:39 am V:\3400_ADC\CAD\SEGMENT E3\PLAN SHEETS\STRUCTURES\R06XX CLCH-TRL\CBRR06XX-BRG-LYT.dwg By: Nick.Williamson

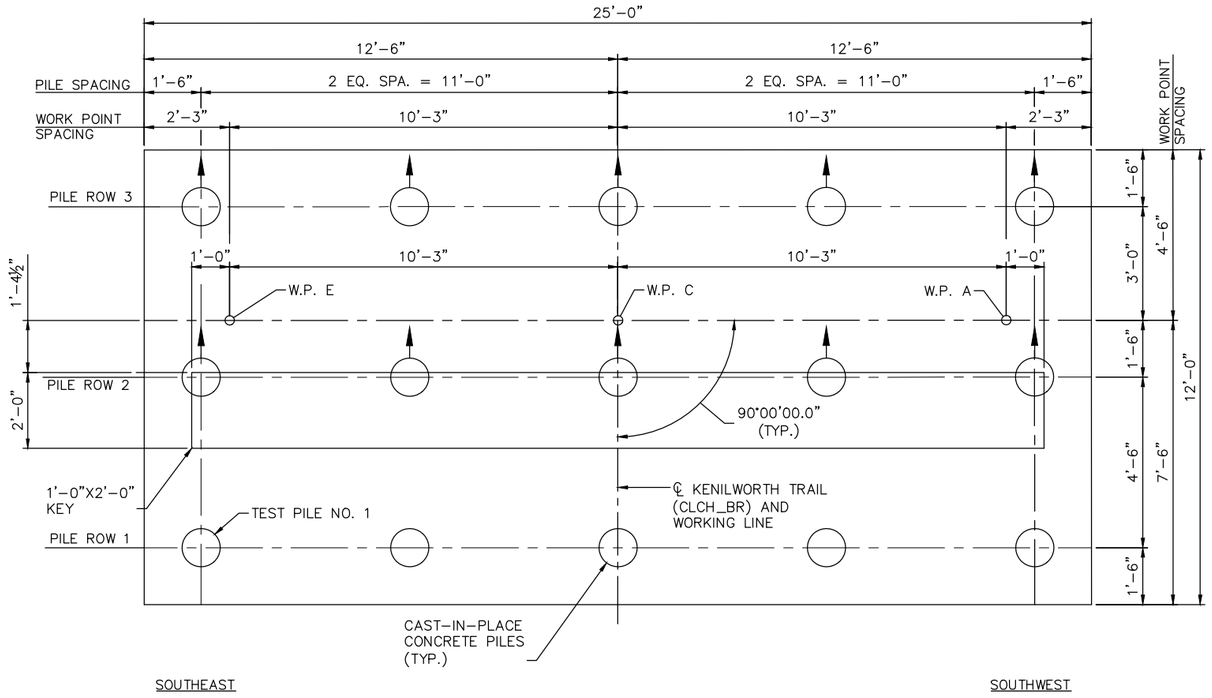

FOOTING PLAN

SOUTH ABUTMENT COMPUTED PILE LOAD - TONS/PILE	
FACTORED DEAD LOAD + EARTH PRESSURE	65
FACTORED LIVE LOAD	7
* FACTORED DESIGN LOAD	72

* BASED ON STRENGTH I LOAD COMBINATION.

SOUTH ABUTMENT REQUIRED NOMINAL PILE BEARING RESISTANCE FOR CIP PILES Rn - TONS/PILE		
FIELD CONTROL METHOD	φdyn	* Rn
PDA	0.65	111

* Rn = (FACTORED DESIGN LOAD) / φdyn

GENERAL PILE NOTES

1 CAST–IN–PLACE CONCRETE TEST PILES 98 FT. LONG
14 CAST–IN–PLACE CONCRETE PILES EST. 88 FT. LENGTH
15 CAST–IN–PLACE CONCRETE PILES REQ'D FOR SOUTH ABUT.

PILE SPACING SHOWN IS AT BOTTOM OF FOOTING.

PILES TO HAVE A NOMINAL DIAMETER OF 12" AND ⅜" WALL THICKNESS.

PILES MARKED THUS ○ TO BE BATTERED 3" PER FOOT IN DIRECTION SHOWN.

FOR PILE SPLICE DETAILS SEE DETAIL B201.

NO.	DATE	BY	CHECK	DESIGN	REVISION / SUBMITTAL

DESIGNED BY: NRW CHECKED BY: JSM
DRAWN BY: PGR CHECKED BY: NRW

AECOM Kimley»Horn

90% SUBMISSION - 01/22/16

METROPOLITAN COUNCIL

SOUTHWEST Green Line LRT Extension

CIVIL - VOLUME 4F
CEDAR LAKE CHANNEL TRAIL BRIDGE
BRIDGE R0XXX
SOUTH ABUTMENT DETAILS 1

DISCIPLINE: STRUCTURES
SHEET NAME: CBRR06XX-BRG-ABT-001

SHEET 4 OF 41

Jan, 16 2016 10:39 am V:\3400_ADC\CAD\SEGMENT E3\PLAN SHEETS\STRUCTURES\R06XX CLCH-TRL\CBRR06XX-BRG-ABUT.dwg By: Nick.Williamson

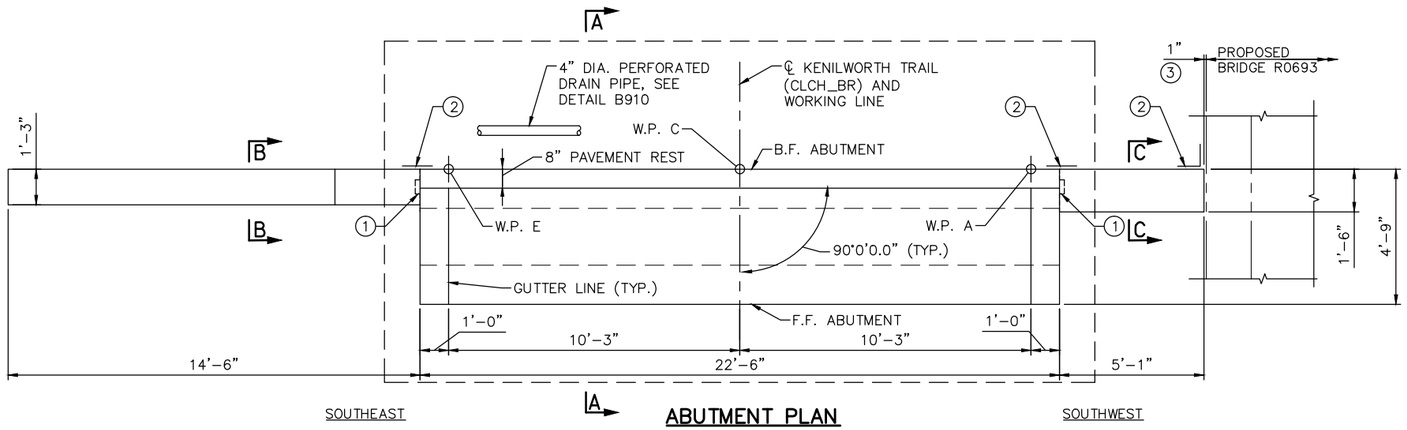

ABUTMENT PLAN

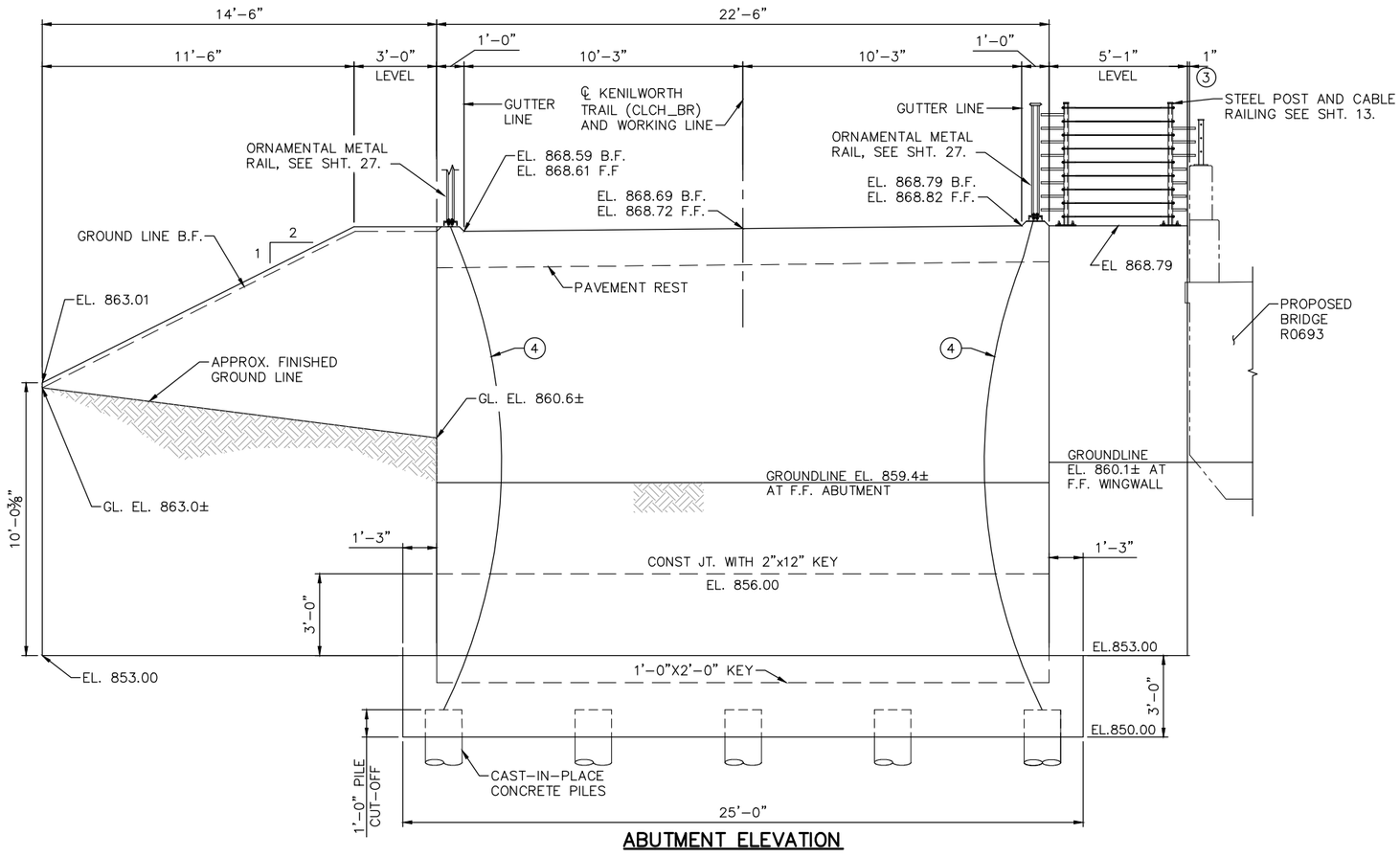

ABUTMENT ELEVATION

NOTES:

FOR SECTION A–A, B–B, AND C–C SEE NEXT SHEET.

72 HOUR TIME DELAY REQUIRED BETWEEN ADJACENT POURS TO ALLOW FOR SHRINKAGE

F.F.–DENOTES FRONT FACE

B.F.–DENOTES BACK FACE

(1) CONSTRUCTION JOINT WITH 2"X6" KEY

(2) MEMBRANE WATERPROOFING SYSTEM PER SPEC. 2481.3.B.

(3) ELECTRICAL INSULATING CORK BARRIER. CONTRACTOR AND FIELD ENGINEER SHALL VERIFY WINGWALL CONCRETE IS SEPARATED AND CONDUCTIVE MATERIAL DOES NOT EXTEND THROUGH CORK.

(4) ATTACH WIRE FENCE ANCHORAGE TO PILE WITH SOLID NO. 6 GAGE COPPER WIRE WITH AN APPROVED TYPE CLAMP OR BRAZING (ONE ANCHORAGE PER END OF RAIL).

NO.	DATE	BY	CHECK	DESIGN	REVISION / SUBMITTAL

DESIGNED BY: NRW | CHECKED BY: JSM
DRAWN BY: PGR | CHECKED BY: NRW

AECOM Kimley»Horn

90% SUBMISSION - 01/22/16

METROPOLITAN COUNCIL

SOUTHWEST Green Line LRT Extension

CIVIL - VOLUME 4F
CEDAR LAKE CHANNEL TRAIL BRIDGE
BRIDGE R06XX
SOUTH ABUTMENT DETAILS 2

DISCIPLINE: STRUCTURES
SHEET NAME: CBRR06XX-BRG-ABT-002

SHEET 5 OF 41

Jan, 16 2016 10:39 am V:\3400_ADC\CAD\SEGMENT E3\PLAN SHEETS\STRUCTURES\R06XX CLCH-TRL\CBRR06XX-BRG-ABUT.dwg By: Nick.Williamson

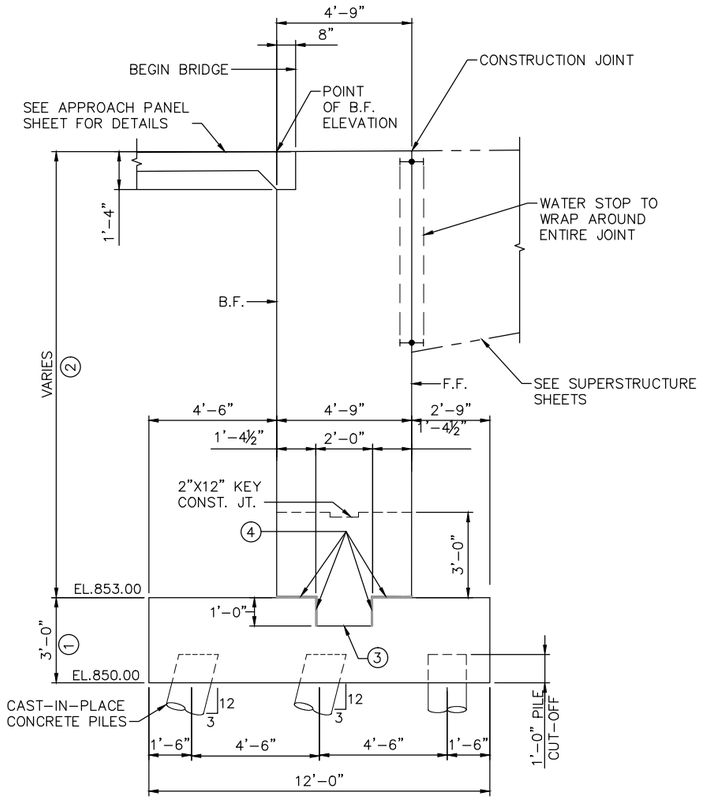

SECTION A–A

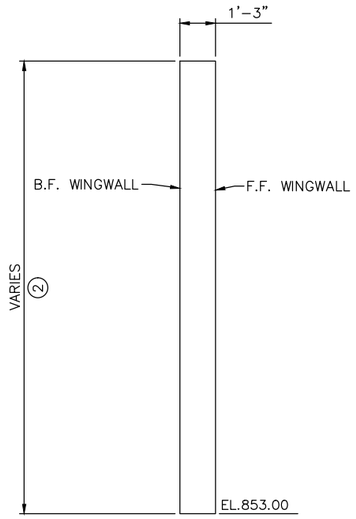

SECTION B–B

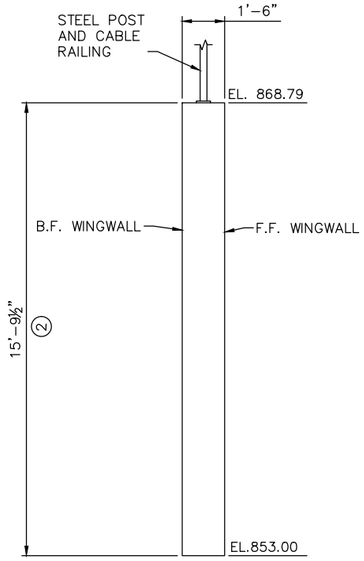

SECTION C–C

NOTES:

72 HOUR TIME DELAY REQUIRED BETWEEN ADJACENT POURS TO ALLOW FOR SHRINKAGE.

F.F. – DENOTES FRONT FACE

B.F. – DENOTES BACK FACE

STRUCTURAL CONCRETE (1G52).

STRUCTURAL CONCRETE (3B52).

(1) 1'–0"X2'–0" KEY ENTIRE LENGTH OF ABUTMENT

(2) ½" PREFORMED JOINT FILLER PER MDOT SPEC. 3702.

(3)

(4)

NO.	DATE	BY	CHECK	DESIGN	REVISION / SUBMITTAL

DESIGNED BY: NRW | CHECKED BY: JSM
DRAWN BY: PGR | CHECKED BY: JSM

AECOM Kimley»Horn

90% SUBMISSION - 01/22/16

METROPOLITAN COUNCIL

SOUTHWEST Green Line LRT Extension

CIVIL - VOLUME 4F
CEDAR LAKE CHANNEL TRAIL BRIDGE
BRIDGE R06XX
SOUTH ABUTMENT DETAILS 3

DISCIPLINE: STRUCTURES
SHEET NAME: CBRR06XX-BRG-ABT-003

SHEET 6 OF 41

Jan, 16 2016 10:39 am V:\3400_ADC\CAD\SEGMENT E3\PLAN SHEETS\STRUCTURES\R06XX CLCH-TRL\CBRR06XX-BRG-ABUT.dwg By: Nick.Williamson

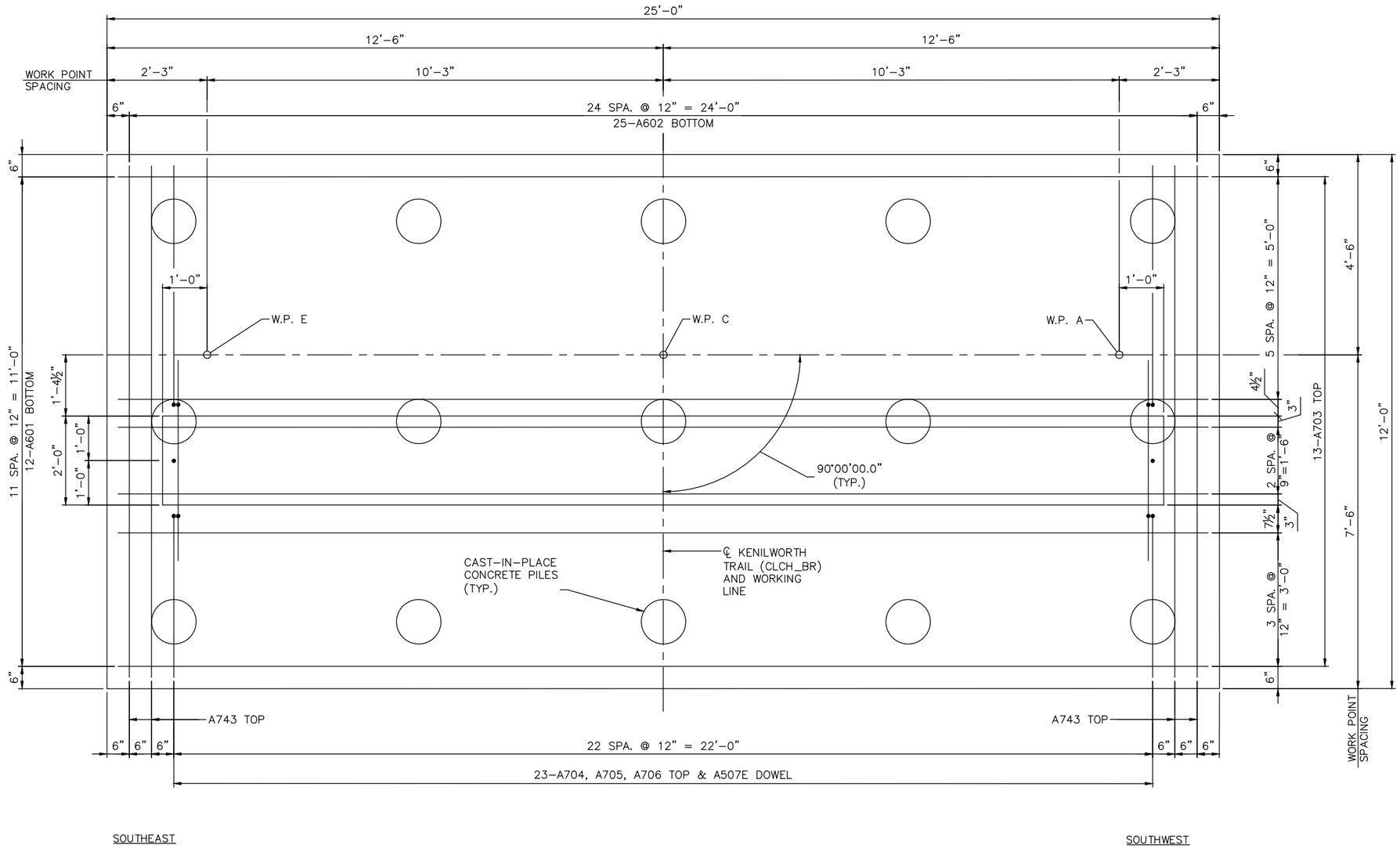

FOOTING PLAN

NO.	DATE	BY	CHECK	DESIGN	REVISION / SUBMITTAL

DESIGNED BY: NRW | CHECKED BY: JSM
DRAWN BY: PGR | CHECKED BY: NRW

AECOM Kimley»Horn

90% SUBMISSION - 01/22/16

METROPOLITAN COUNCIL

SOUTHWEST Green Line LRT Extension

CIVIL - VOLUME 4F
CEDAR LAKE CHANNEL TRAIL BRIDGE
BRIDGE R06XX
SOUTH ABUTMENT REINFORCEMENT 1

DISCIPLINE: STRUCTURES
SHEET NAME: CBRR06XX-BRG-ABT-004

SHEET 7 OF 41

Jan, 16 2016 10:39 am V:\3400_ADC\CAD\SEGMENT E3\PLAN SHEETS\STRUCTURES\R06XX CLCH-TRL\CBRR06XX-BRG-ABUT.dwg By: Nick.Williamson

NOTES:

FOR SECTION A–A SEE NEXT SHEET.

F.F.–DENOTES FRONT FACE

B.F.–DENOTES BACK FACE

E.F.–DENOTES EACH FACE

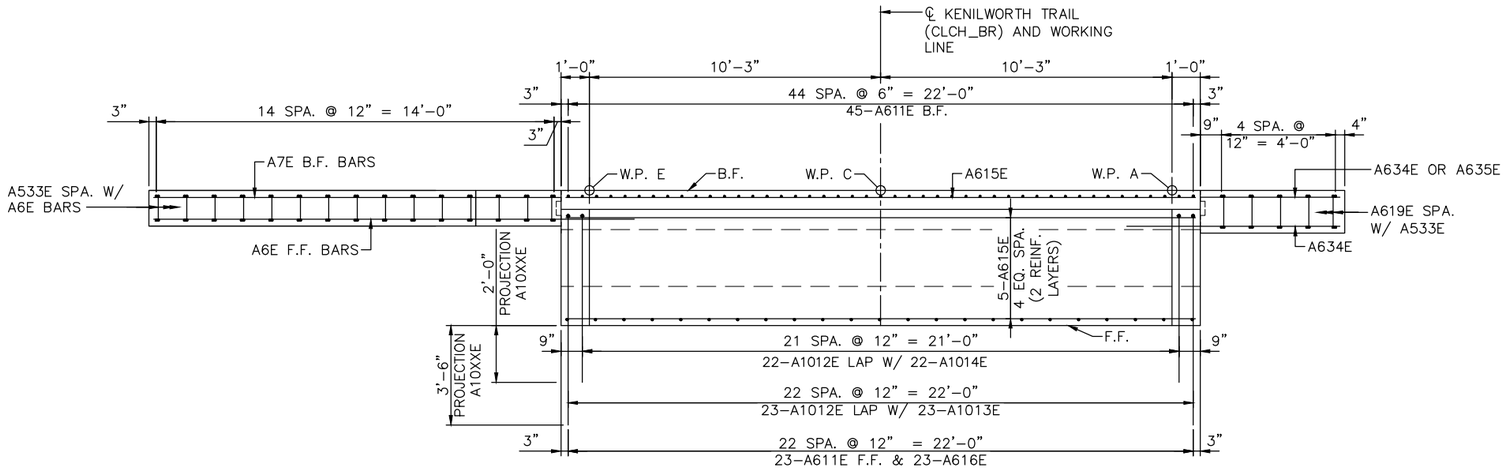

ABUTMENT PLAN

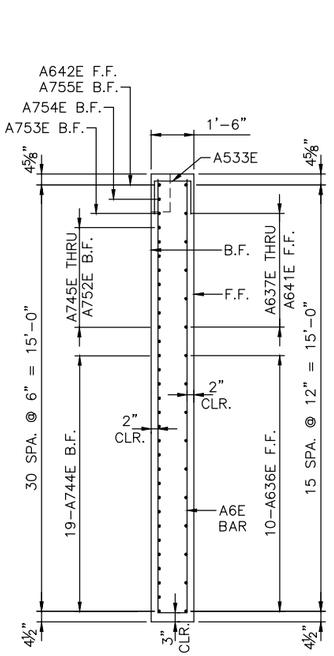

SECTION B–B

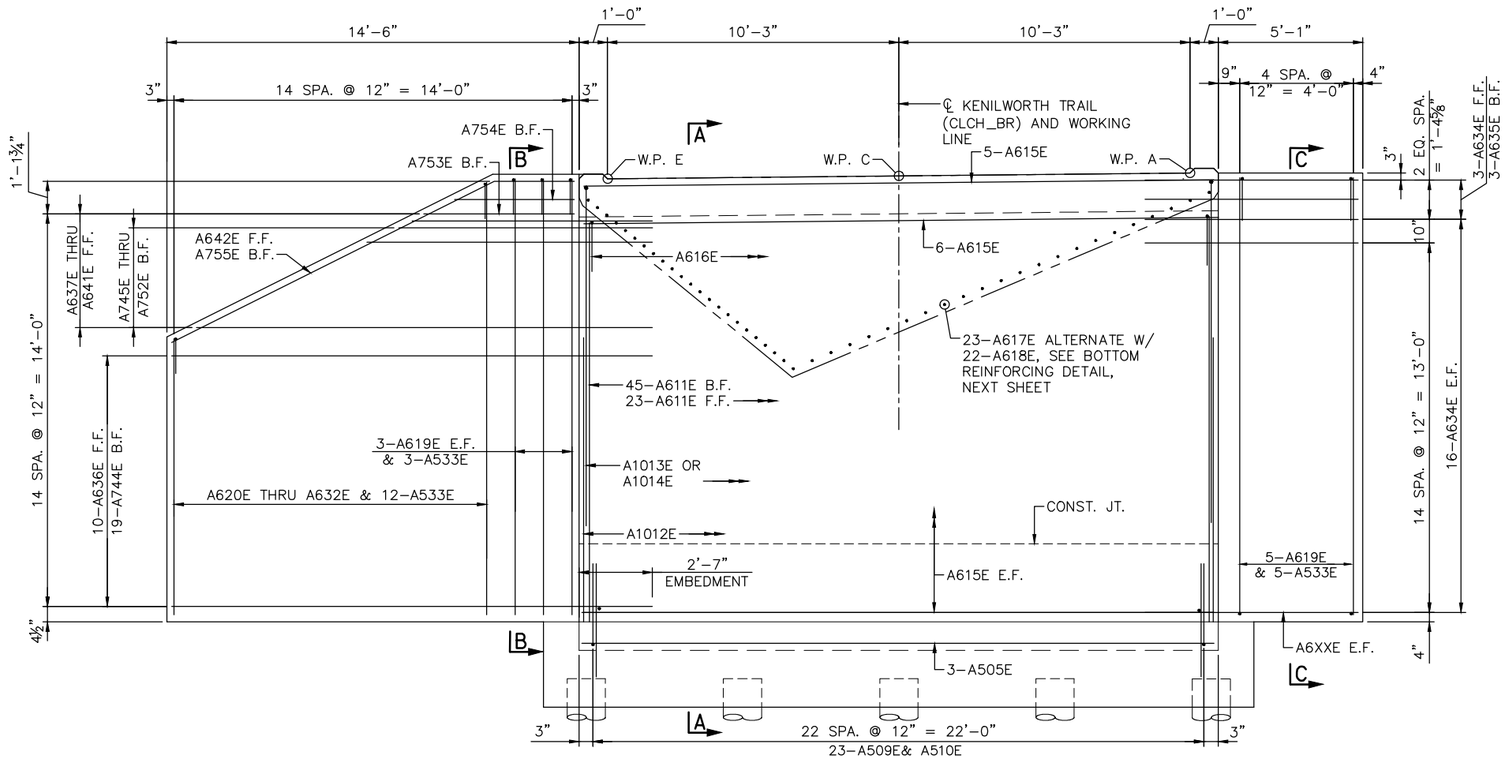

ABUTMENT ELEVATION

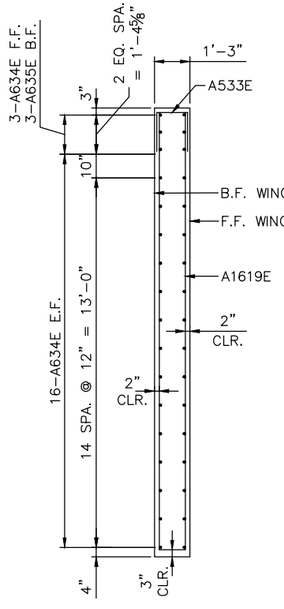

SECTION C–C

NO.	DATE	BY	CHECK	DESIGN	REVISION / SUBMITTAL

DESIGNED BY: NRW CHECKED BY: JSM

DRAWN BY: PGR CHECKED BY: NRW

90% SUBMISSION - 01/22/16

AECOM Kimley»Horn

METROPOLITAN COUNCIL

SOUTHWEST Green Line LRT Extension

CIVIL - VOLUME 4F
CEDAR LAKE CHANNEL TRAIL BRIDGE
BRIDGE R06XX
SOUTH ABUTMENT REINFORCEMENT 2

DISCIPLINE: STRUCTURES

SHEET NAME: CBRR06XX-BRG-ABT-005

SHEET 8 OF 41

Jan, 16 2016 10:39 am V:\3400_ADC\CAD\SEGMENT E3\PLAN SHEETS\STRUCTURES\R06XX CLCH-TRL\CBRR06XX-BRG-ABUT.dwg By: Nick.Williamson

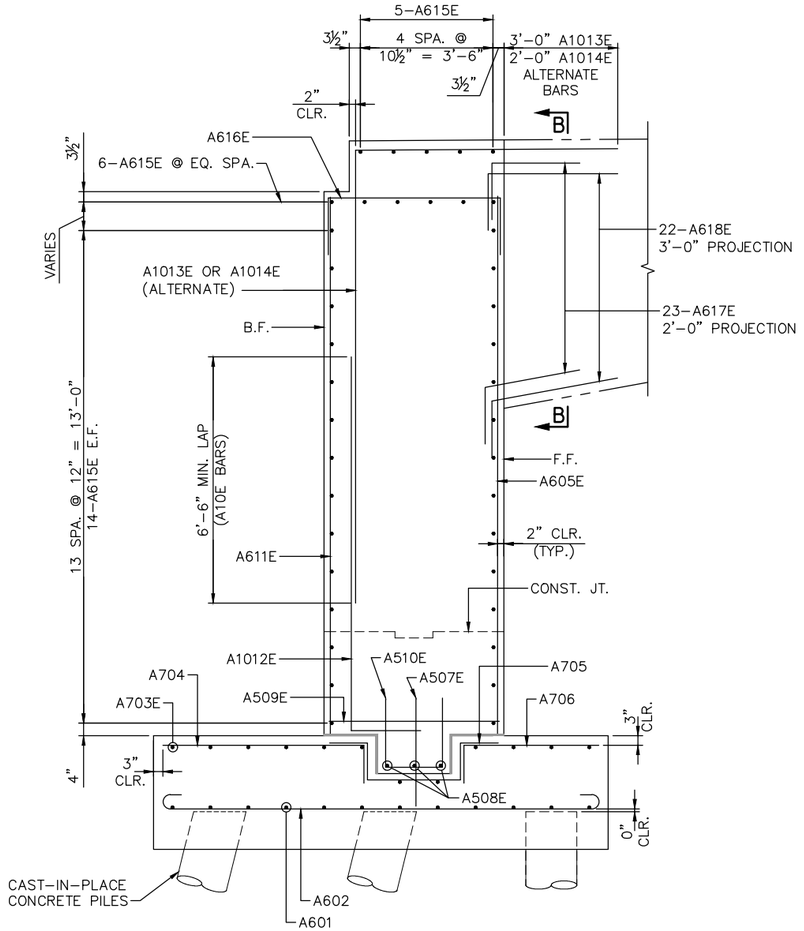

SECTION A–A

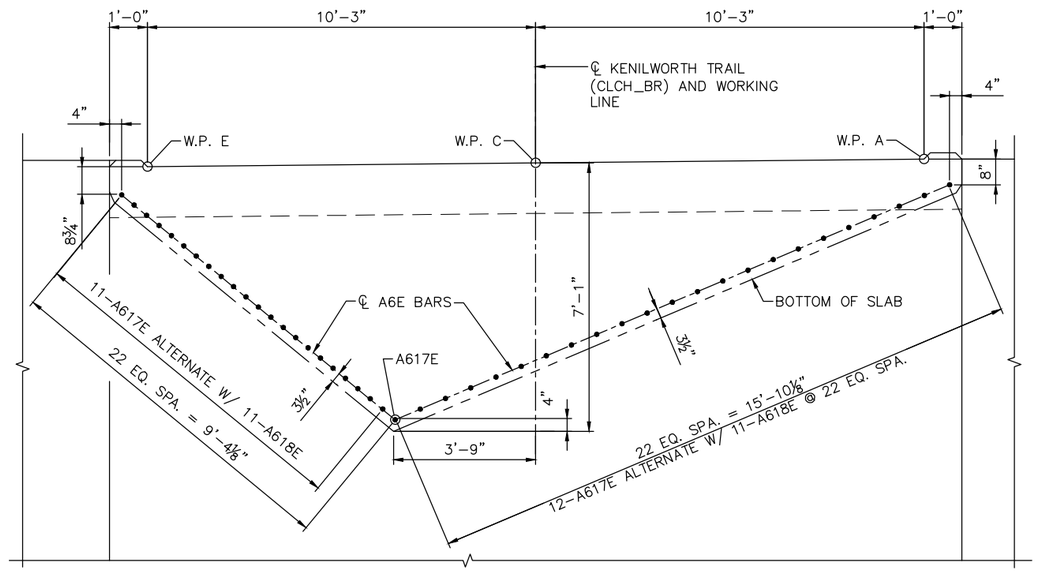

SECTION B–B

LOOKING BACK ON STATIONING

● –DENOTES A1013E

○ –DENOTES A1014E

NO.	DATE	BY	CHECK	DESIGN	REVISION / SUBMITTAL

DESIGNED BY: NRW | CHECKED BY: JSM

DRAWN BY: PGR | CHECKED BY: NRW

AECOM Kimley»Horn

90% SUBMISSION - 01/22/16

METROPOLITAN COUNCIL

SOUTHWEST Green Line LRT Extension

CIVIL - VOLUME 4F
CEDAR LAKE CHANNEL TRAIL BRIDGE
BRIDGE R06XX
SOUTH ABUTMENT REINFORCEMENT 3

DISCIPLINE: STRUCTURES

SHEET NAME: CBRR06XX-BRG-ABT-006

SHEET 9 OF 41

Jan, 16 2016 10:39 am V:\3400_ADC\CAD\SEGMENT E3\PLAN SHEETS\STRUCTURES\R06XX CLCH-TRL\CBRR06XX-BRG-ABUT.dwg By: Nick.Williamson

BILL OF REINFORCEMENT FOR SOUTH ABUTMENT				
BAR	NO.	LENGTH	SHAPE	LOCATION
A601	12	'-"	BENT	TRANSVERSE FOOTING BOTTOM
A602	25	'-"	BENT	LONG. FOOTING BOTTOM
A703	13	'-"	STR.	TRANS. FTG. TOP
A704	23	'-"	BENT	TRANS. FTG. TOP
A705	23	'-"	BENT	TRANS. FTG. TOP
A706	23	'-"	BENT	TRANS. FTG. TOP
A507E	23	'-"	STR.	TRANS. FTG. DOWEL
A508E	3	'-"	STR.	TRANS. ABUT. KEY
A509E	23	'-"	STR.	TRANS. ABUT. KEY
A510E	23	'-"	BENT	TRANS. ABUT. KEY
A611E	68	'-"	STR.	ABUT. VERT. E.F.
A1012E	45	'-"	BENT	ABUT. VERT. B.F.
A1013E	23	'-"	BENT	ABUT. VERT. B.F.
A1014E	22	'-"	BENT	ABUT. VERT. B.F.
A615E	39	'-"	STR.	ABUT. HORZ. E.F.
A616E	23	'-"	BENT	ABUT. SEAT
A617E	23	'-"	BENT	ABUT. F.F. / SLAB
A618E	22	'-"	BENT	ABUT. F.F. / SLAB
A619E	8	'-"	BENT	WINGWALLS VERT.
A620E	1	'-"	BENT	SE WINGWALL
A621E	1	'-"	BENT	SE WINGWALL
A622E	1	'-"	BENT	SE WINGWALL
A623E	1	'-"	BENT	SE WINGWALL
A624E	1	'-"	BENT	SE WINGWALL
A625E	1	'-"	BENT	SE WINGWALL
A626E	1	'-"	BENT	SE WINGWALL
A627E	1	'-"	BENT	SE WINGWALL
A629E	1	'-"	BENT	SE WINGWALL
A630E	1	'-"	BENT	SE WINGWALL
A631E	1	'-"	BENT	SE WINGWALL
A632E	1	'-"	BENT	SE WINGWALL
A533E	20	'-"	BENT	WINGWALLS TIE
A634E	37	'-"	STR.	SW WINGWALL HORZ.
A635E	3	'-"	STR.	SW WINGWALL HORZ.
A636E	10	'-"	STR.	SW WINGWALL HORZ. F.F.
A637E	1	'-"	STR.	SW WINGWALL HORZ. F.F.
A638E	1	'-"	STR.	SW WINGWALL HORZ. F.F.
A640E	1	'-"	STR.	SW WINGWALL HORZ. F.F.
A641E	1	'-"	STR.	SW WINGWALL HORZ. F.F.
A642E	1	'-"	BENT	SW WINGWALL HORZ. F.F.
A743E	4	'-"	STR.	FTG. LONG. TOP
A744E	19	'-"	STR.	SE WINGWALL HORZ. B.F.
A745E	1	'-"	STR.	SE WINGWALL HORZ. B.F.
A746E	1	'-"	STR.	SE WINGWALL HORZ. B.F.
A747E	1	'-"	STR.	SE WINGWALL HORZ. B.F.
A748E	1	'-"	STR.	SE WINGWALL HORZ. B.F.
A749E	1	'-"	STR.	SE WINGWALL HORZ. B.F.
A750E	1	'-"	STR.	SE WINGWALL HORZ. B.F.
A751E	1	'-"	STR.	SE WINGWALL HORZ. B.F.
A752E	1	'-"	STR.	SE WINGWALL HORZ. B.F.
A753E	1	'-"	STR.	SE WINGWALL HORZ. B.F.
A754E	1	'-"	STR.	SE WINGWALL HORZ. B.F.
A755E	1	'-"	BENT	SE WINGWALL HORZ. B.F.

Jan, 16 2016 10:39 am V:\3400_ADC\CAD\SEGMENT E3\PLAN SHEETS\STRUCTURES\R06XX CLCH-TRL\CBRR06XX-BRG-ABUT.dwg By: Nick.Williamson

NO.	DATE	BY	CHECK	DESIGN	REVISION / SUBMITTAL

DESIGNED BY: NRW CHECKED BY: JSM
DRAWN BY: PGR CHECKED BY: JSM

AECOM Kimley»Horn

90% SUBMISSION - 01/22/16

METROPOLITAN COUNCIL

SOUTHWEST Green Line LRT Extension

CIVIL - VOLUME 4F
CEDAR LAKE CHANNEL TRAIL BRIDGE
BRIDGE R06XX
SOUTH ABUTMENT REINFORCEMENT 4

DISCIPLINE: STRUCTURES

SHEET NAME: CBRR06XX-BRG-ABT-007

SHEET 10 OF 41

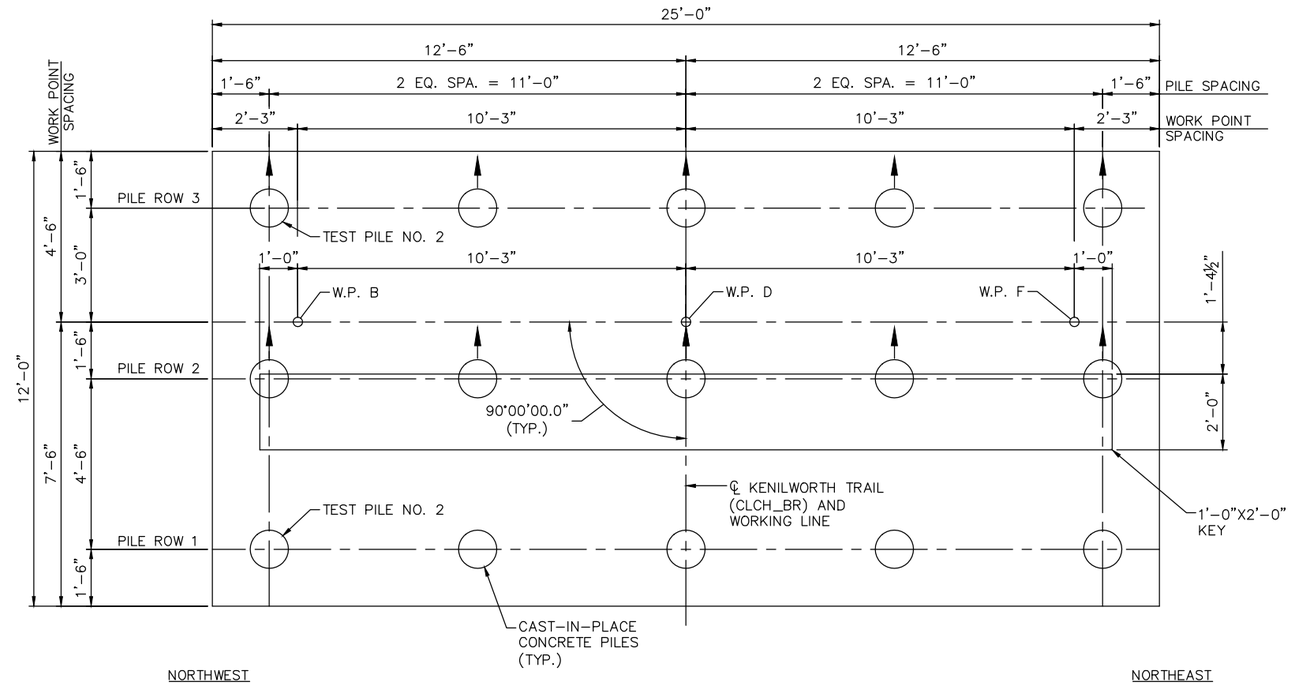

FOOTING PLAN

NORTH ABUTMENT COMPUTED PILE LOAD - TONS/PILE	
FACTORED DEAD LOAD + EARTH PRESSURE	61
FACTORED LIVE LOAD	7
* FACTORED DESIGN LOAD	68

* BASED ON STRENGTH I LOAD COMBINATION.

NORTH ABUTMENT REQUIRED NOMINAL PILE BEARING RESISTANCE FOR CIP PILES Rn - TONS/PILE		
FIELD CONTROL METHOD	φdyn	* Rn
PDA	0.65	105

* Rn = (FACTORED DESIGN LOAD) / φdyn

GENERAL PILE NOTES

1 CAST-IN-PLACE CONCRETE TEST PILES 117 FT. LONG
14 CAST-IN-PLACE CONCRETE PILES EST. 107 FT. LENGTH
15 CAST-IN-PLACE CONCRETE PILES REQ'D FOR NORTH ABUT.

PILE SPACING SHOWN IS AT BOTTOM OF FOOTING.

PILES TO HAVE A NOMINAL DIAMETER OF 12" AND ⅜" WALL THICKNESS.

PILES MARKED THUS ◯ TO BE BATTERED 3" PER FOOT IN DIRECTION SHOWN.

FOR PILE SPLICE DETAILS SEE DETAIL B201.

NO.	DATE	BY	CHECK	DESIGN	REVISION / SUBMITTAL

DESIGNED BY: NRW CHECKED BY: JSM
DRAWN BY: PGR CHECKED BY: NRW

AECOM Kimley»Horn

90% SUBMISSION - 01/22/16

METROPOLITAN COUNCIL

SOUTHWEST Green Line LRT Extension

CIVIL - VOLUME 4F
CEDAR LAKE CHANNEL TRAIL BRIDGE
BRIDGE R06XX
NORTH ABUTMENT DETAILS 1

DISCIPLINE: STRUCTURES
SHEET NAME: CBRR06XX-BRG-ABT-008

SHEET 11 OF 41

Jan, 16 2016 10:39 am V:\3400_ADC\CAD\SEGMENT E3\PLAN SHEETS\STRUCTURES\R06XX CLCH-TRL\CBRR06XX-BRG-ABUT.dwg By: Nick.Williamson

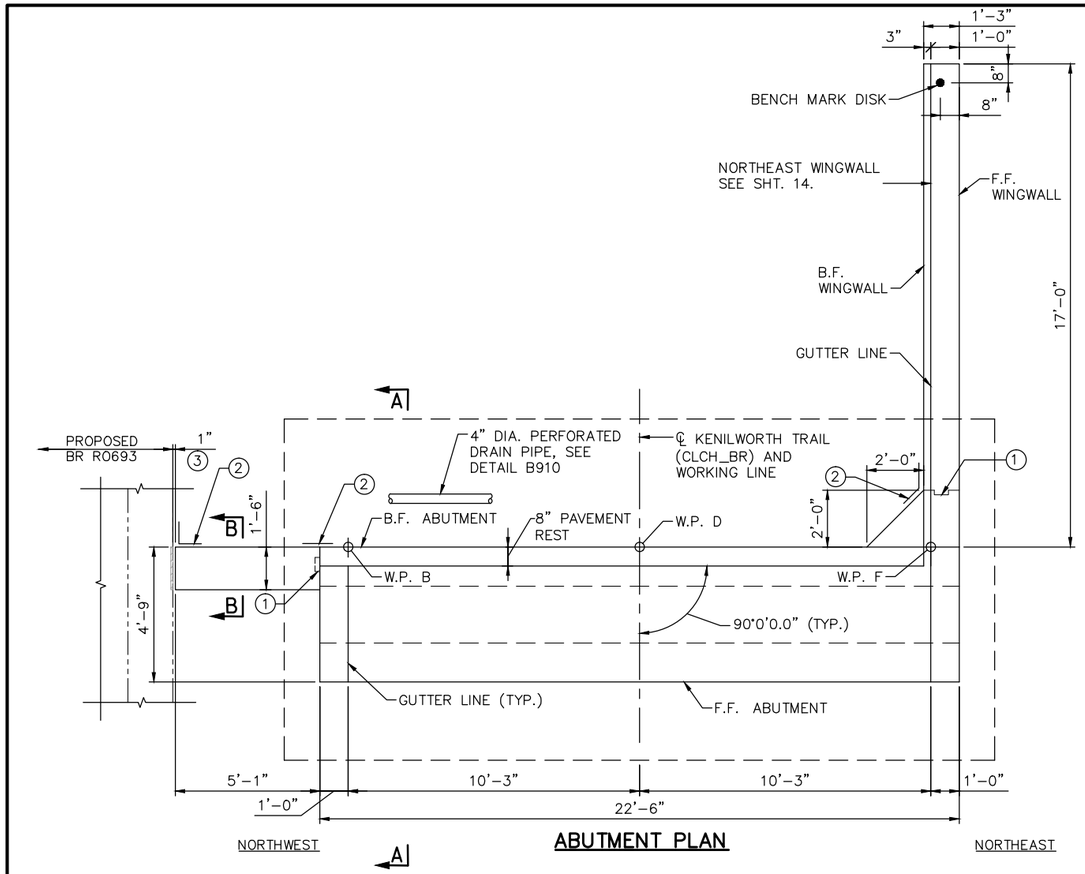

ABUTMENT PLAN

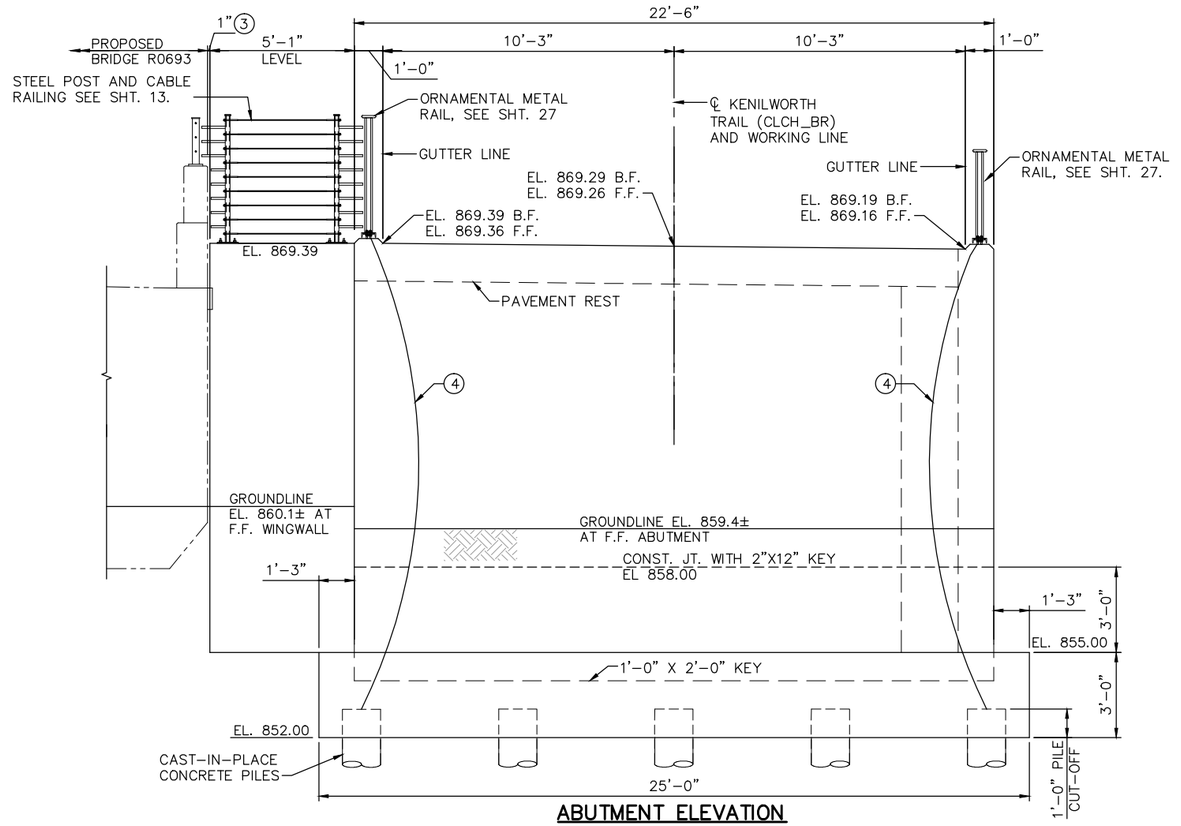

ABUTMENT ELEVATION

NOTES:

FOR SECTION A–A & B–B SEE NEXT SHEET.

72 HOUR TIME DELAY REQUIRED BETWEEN ADJACENT POURS TO ALLOW FOR SHRINKAGE

F.F.–DENOTES FRONT FACE

B.F.–DENOTES BACK FACE

(1) CONSTRUCTION JOINT WITH 2"X6" KEY

(2) MEMBRANE WATERPROOFING SYSTEM PER SPEC. 2481.3.B.

(3) ELECTRICAL INSULATING CORK BARRIER. CONTRACTOR AND FIELD ENGINEER SHALL VERIFY WINGWALL CONCRETE IS SEPARATED AND CONDUCTIVE MATERIAL DOES NOT EXTEND THROUGH CORK.

(4) ATTACH WIRE FENCE ANCHORAGE TO PILE WITH SOLID NO. 6 GAGE COPPER WIRE WITH AN APPROVED TYPE CLAMP OR BRAZING (ONE ANCHORAGE PER END OF RAIL).

NO.	DATE	BY	CHECK	DESIGN	REVISION / SUBMITTAL

DESIGNED BY: NRW | CHECKED BY: JSM
DRAWN BY: PGR | CHECKED BY: NRW

AECOM Kimley»Horn

90% SUBMISSION - 01/22/16

METROPOLITAN COUNCIL

SOUTHWEST Green Line LRT Extension

CIVIL - VOLUME 4F
CEDAR LAKE CHANNEL TRAIL BRIDGE
BRIDGE R06XX
NORTH ABUTMENT DETAILS 2

DISCIPLINE: STRUCTURES
SHEET NAME: CBRR06XX-BRG-ABT-009

SHEET 12 OF 41

Jan, 16 2016 10:39 am V:\3400_ADC\CAD\SEGMENT E3\PLAN SHEETS\STRUCTURES\R06XX CLCH-TRL\CBRR06XX-BRG-ABUT.dwg By: Nick.Williamson

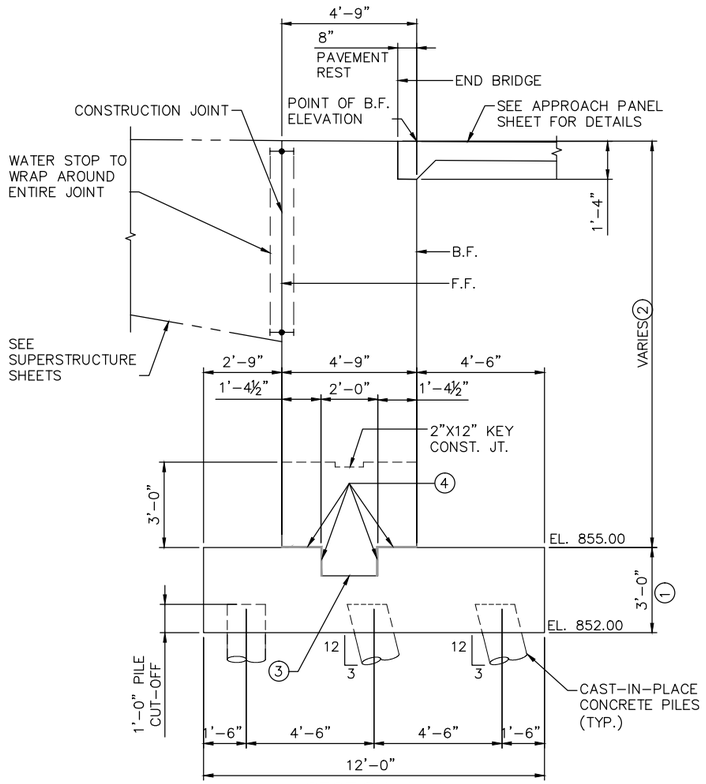

SECTION A–A

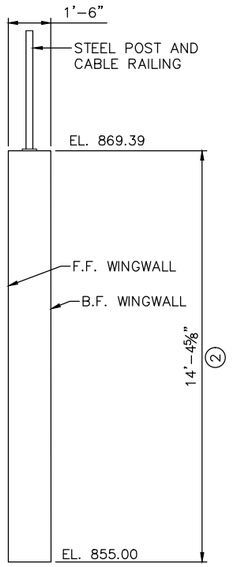

SECTION B–B

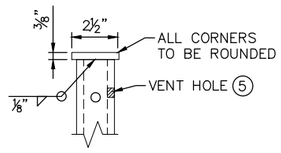

POST CAP DETAIL

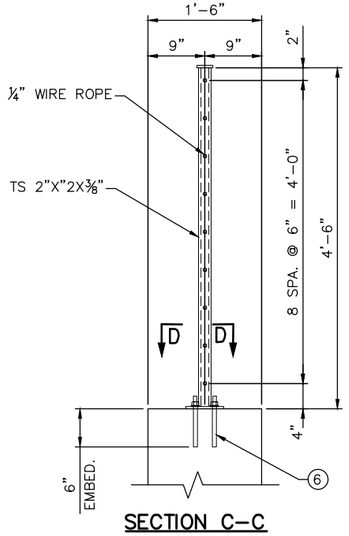

SECTION C–C

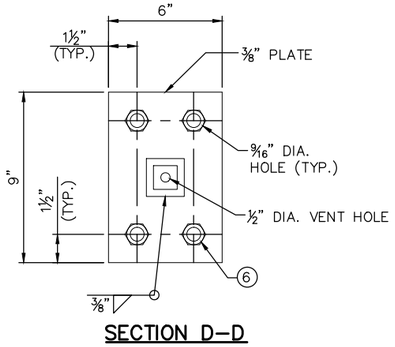

SECTION D–D

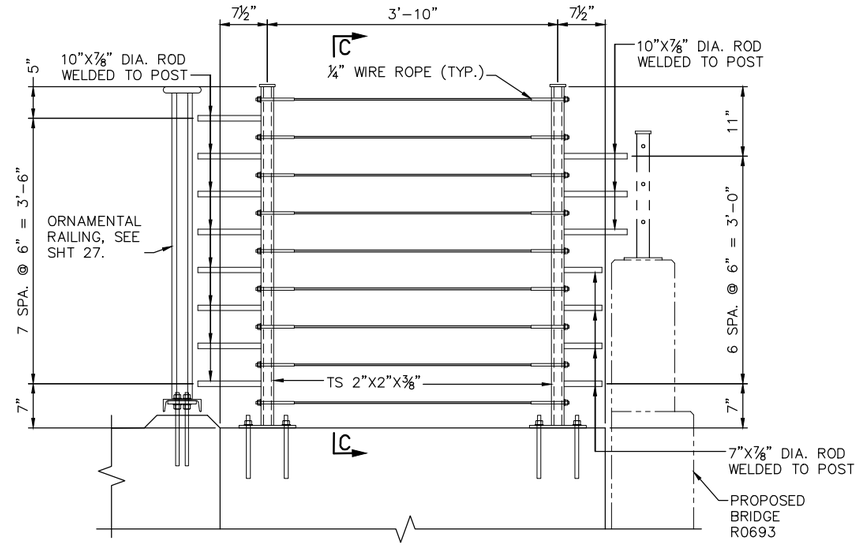

STEEL POST AND CABLE RAILING ELEVATION AT SOUTH ABUTMENT

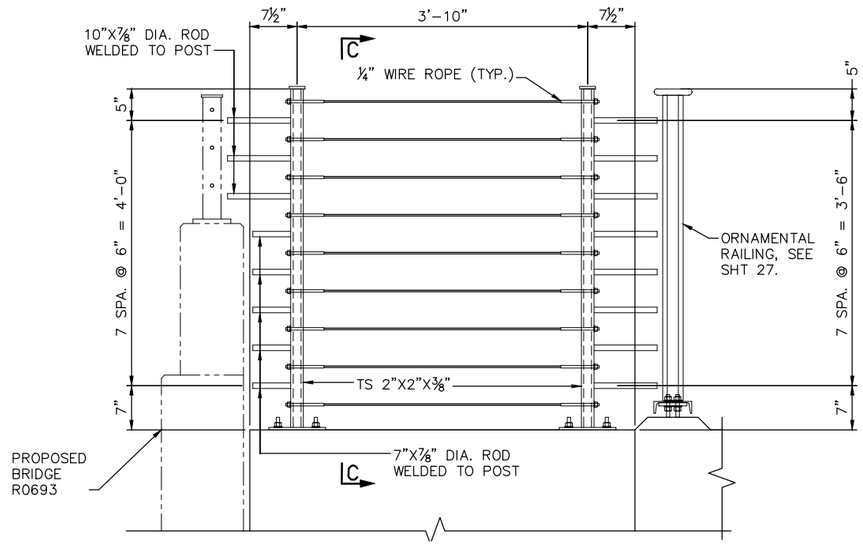

STEEL POST AND CABLE RAILING ELEVATION AT NORTH ABUTMENT

NOTES:

72 HOUR TIME DELAY REQUIRED BETWEEN ADJACENT POURS TO ALLOW FOR SHRINKAGE.

F.F.–DENOTES FRONT FACE

B.F.–DENOTES BACK FACE

USE A500, GRADE B STRUCTURAL STEEL TUBING (HSS) IN THE RAIL CONFORMING TO SPEC. 3361. FINIAL CAPS SHALL BE SPEC. 3322. ALL OTHER STEEL SHALL CONFORM TO SPEC. 3306.

GALVANIZE BOLTS, NUTS, WASHERS, AND ANCHORS PER SPEC. 3392. GALVANIZE ALL OTHER STRUCTURAL STEEL PER SPEC. 3394. AFTER FABRICATION.

COAT THE GALVANIZED RAILING, BASE PLATES, AND PROTRUDING PORTIONS OF BOLTS, NUTS, ANCHORS, AND WASHERS.

INSTALL RAIL POSTS PLUMB.

SEE SPECIAL PROVISIONS FOR REQUIREMENTS NOT INCLUDED ON THIS SHEET.

DRILL ½" DIA. MAX. VENT HOLES ON THE UNDERSIDE OF RAIL TUBES AS NECESSARY TO FACILITATE GALVANIZING.

(1) STRUCTURAL CONCRETE (1G52).

(2) STRUCTURAL CONCRETE (3B52).

(3) 1'–0"X2'–0" KEY ENTIRE LENGTH OF ABUTMENT

(4) ½" PREFORMED JOINT FILLER PER MNDOT. SPEC. 3702.

(5) DRILL VENT HOLE IN THE RAIL POST WITHIN 2" OF THE UNDERSIDE OF THE CAP, ON THE NON–TRAFFIC SIDE OF THE POST AS NECESSARY TO FACILITATE GALVANIZING. MAXIMUM HOLE SIZE IS ½" DIA.

(6) ADHESIVE ANCHORAGE WITH ½" DIA. ANCHOR ROD PER SPEC. 3385. TYPE A WITH HEX NUT AND WASHER. PROVIDE AN ADHESIVE WITH A MINIMUM CHARACTERISTIC BOND STRENGTH IN UNCRACKED CONCRETE OF 1.5 KSI. EMBED THE ANCHORAGE NO LESS THAN 6" REGARDLESS OF CHARACTERISTIC BOND STRENGTH. DRILL THROUGH REINFORCEMENT (IF ENCOUNTERED) TO ACHIEVE MINIMUM EMBEDMENT. ENSURE HEX NUT IS IN CONTACT WITH THE ADJACENT SURFACE AND TORQUE TO 60 FT–LBS UNLESS A HIGHER TORQUE IS RECOMMENDED BY THE MANUFACTURER. PROOF LOAD TO 4.8 KIPS. SEE SPECIAL PROVISIONS FOR ADDITIONAL REQUIREMENTS.

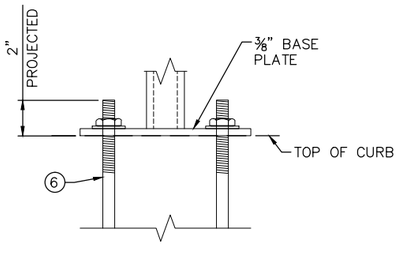

ANCHOR DETAIL

NO.	DATE	BY	CHECK	DESIGN	REVISION / SUBMITTAL

DESIGNED BY: NRW | CHECKED BY: JSM
DRAWN BY: PGR | CHECKED BY: NRW

AECOM Kimley»Horn

90% SUBMISSION - 01/22/16

METROPOLITAN COUNCIL

SOUTHWEST Green Line LRT Extension

CIVIL - VOLUME 4F
CEDAR LAKE CHANNEL TRAIL BRIDGE
BRIDGE R06XX
NORTH ABUTMENT DETAILS 3

DISCIPLINE: STRUCTURES
SHEET NAME: CBRR06XX-BRG-ABT-010

SHEET 13 OF 41

Jan, 16 2016 10:40 am V:\3400_ADC\CAD\SEGMENT E3\PLAN SHEETS\STRUCTURES\R06XX CLCH-TRL\CBRR06XX-BRG-ABUT.dwg By: Nick.Williamson

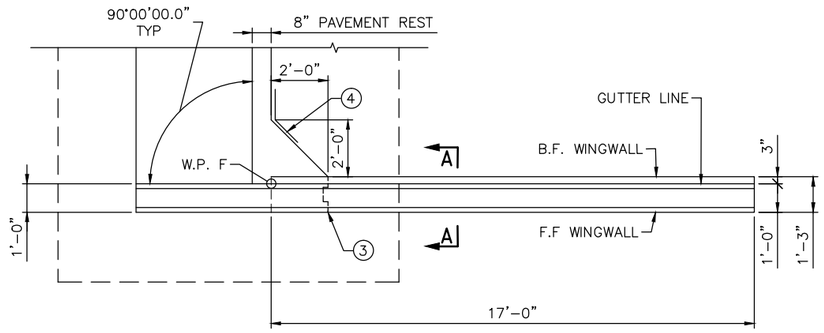

PLAN NORTHEAST WINGWALL

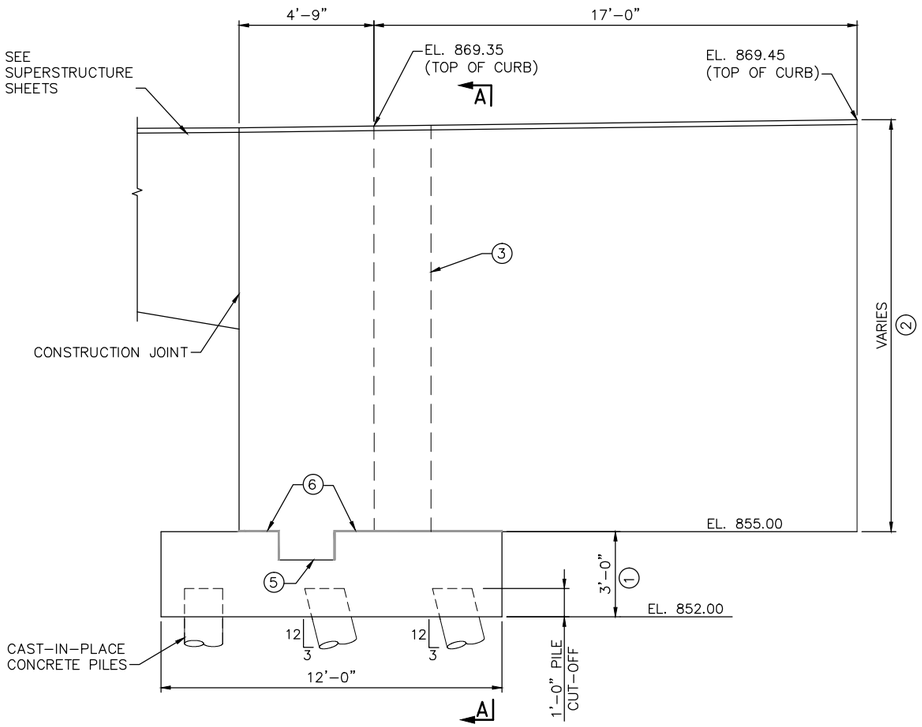

ELEVATION NORTHEAST WINGWALL

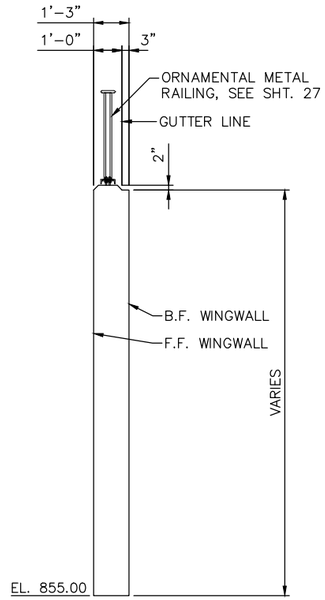

SECTION A-A

NOTES:

72 HOUR TIME DELAY REQUIRED BETWEEN ADJACENT POURS TO ALLOW FOR SHRINKAGE.

F.F. – DENOTES FRONT FACE

B.F. – DENOTES BACK FACE

(1) STRUCTURAL CONCRETE (1G52).

(2) STRUCTURAL CONCRETE (3B52).

(3) CONSTRUCTION JOINT WITH 2"X6" KEY.

(4) MEMBRANE WATERPROOFING SYSTEM PER SPEC. 2481.3.B

(5) 1'-0"X2'-0" KEY ENTIRE LENGTH OF ABUTMENT

(6) ½" PREFORMED JOINT FILLER PER MNDOT SPEC. 3702.

Jan, 16 2016 10:40 am V:\3400_ADC\CAD\SEGMENT E3\PLAN SHEETS\STRUCTURES\R06XX CLCH-TRL\CBRR06XX-BRG-ABUT.dwg By: Nick.Williamson

NO.	DATE	BY	CHECK	DESIGN	REVISION / SUBMITTAL

DESIGNED BY: NRW | CHECKED BY: JSM
DRAWN BY: PGR | CHECKED BY: NRW

AECOM Kimley»Horn

90% SUBMISSION - 01/22/16

METROPOLITAN COUNCIL

SOUTHWEST Green Line LRT Extension

CIVIL - VOLUME 4F
CEDAR LAKE CHANNEL TRAIL BRIDGE
BRIDGE R06XX
NORTH ABUTMENT DETAILS 4

DISCIPLINE: STRUCTURES
SHEET NAME: CBRR06XX-BRG-ABT-011

SHEET 14 OF 41

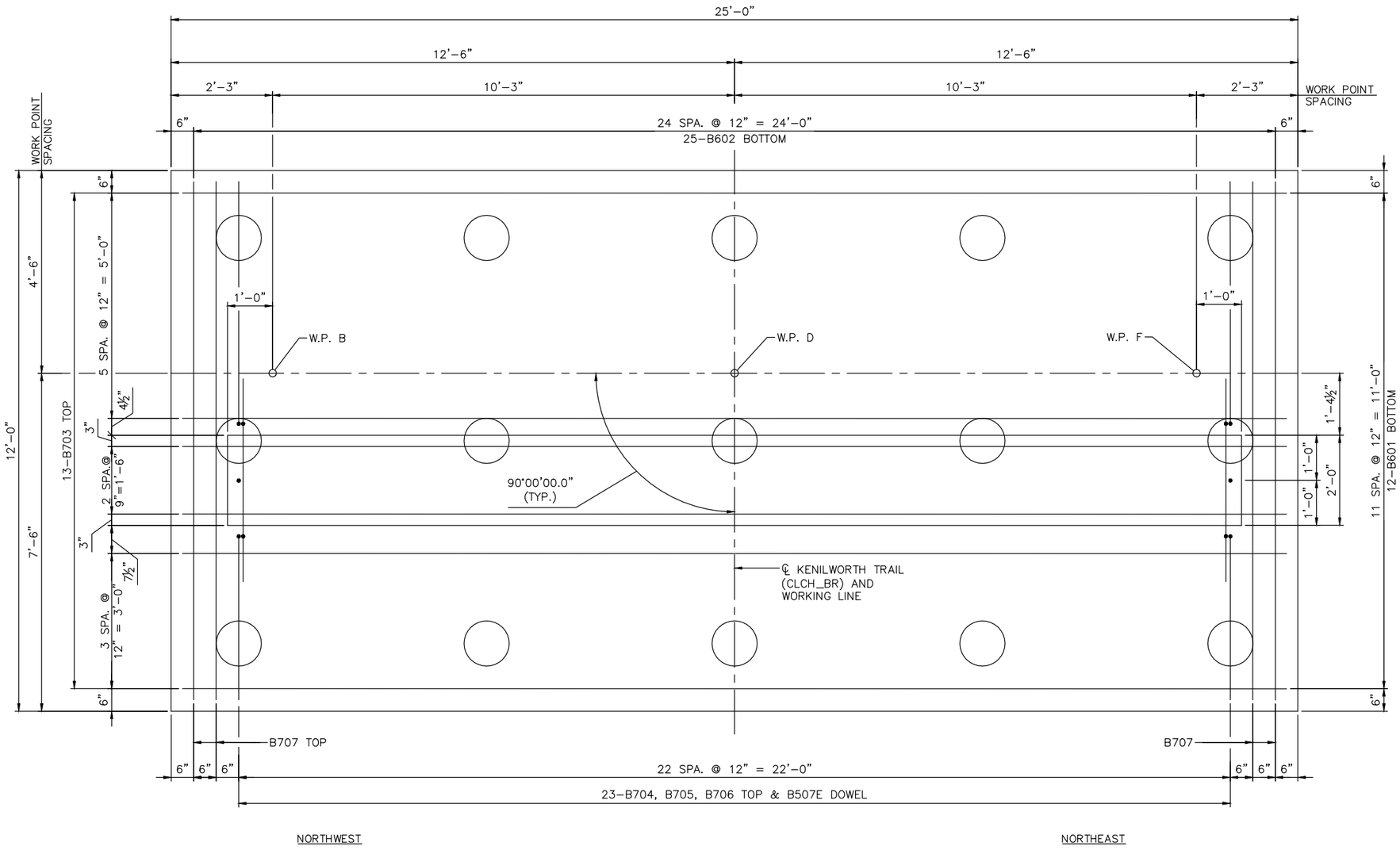

FOOTING PLAN

NO.	DATE	BY	CHECK	DESIGN	REVISION / SUBMITTAL

DESIGNED BY: NRW | CHECKED BY: JSM
DRAWN BY: PGR | CHECKED BY: NRW

AECOM Kimley»Horn

90% SUBMISSION - 01/22/16

METROPOLITAN COUNCIL

SOUTHWEST Green Line LRT Extension

CIVIL - VOLUME 4F
CEDAR LAKE CHANNEL TRAIL BRIDGE
BRIDGE R06XX
NORTH ABUTMENT REINFORCEMENT 1

DISCIPLINE: STRUCTURES
SHEET NAME: CBRR06XX-BRG-ABT-012

SHEET 15 OF 41

Jan, 16 2016 10:40 am V:\3400_ADC\CAD\SEGMENT E3\PLAN SHEETS\STRUCTURES\R06XX CLCH-TRL\CBRR06XX-BRG-ABUT.dwg By: Nick.Williamson

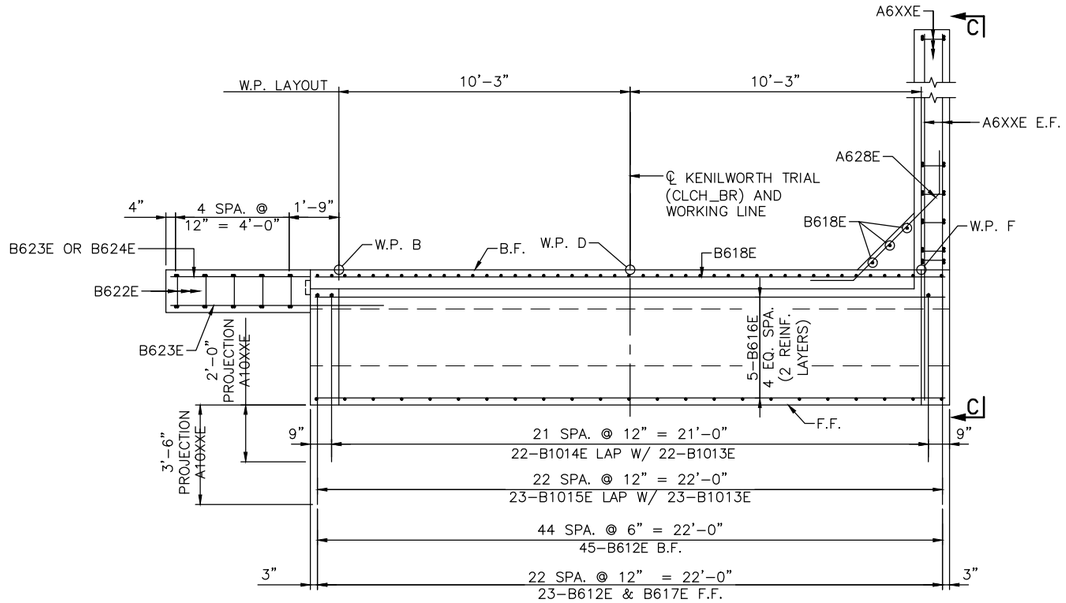

NORTHWEST

ABUTMENT PLAN

NORTHEAST

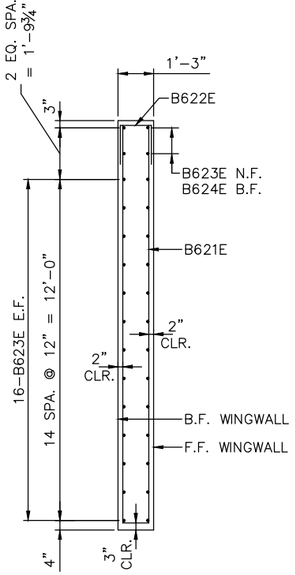

SECTION B-B

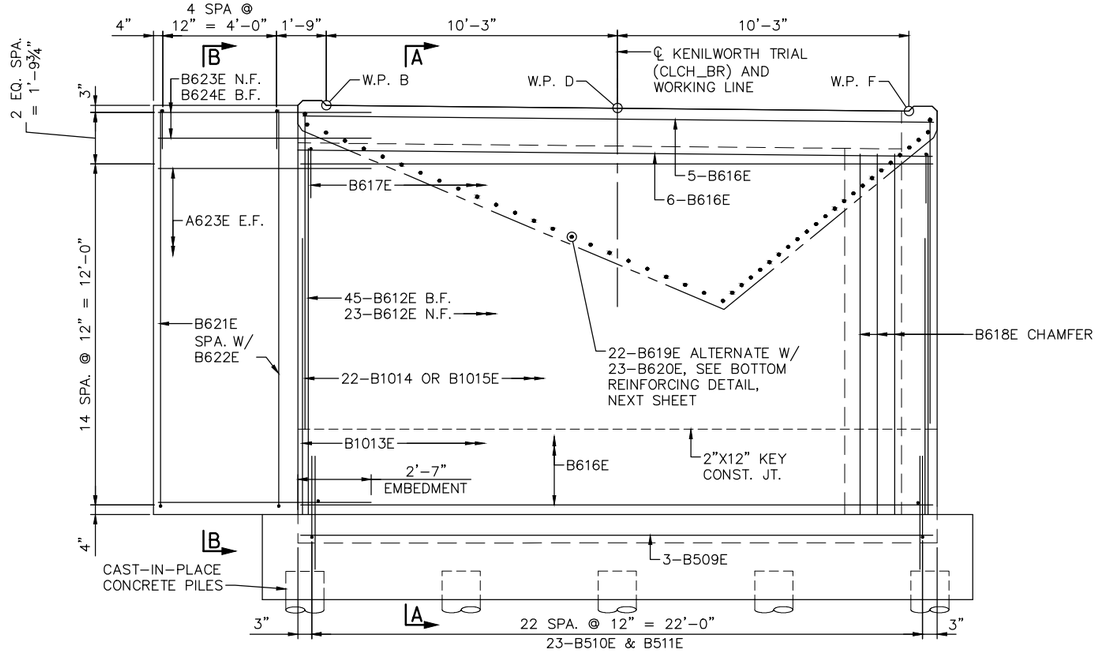

ABUTMENT ELEVATION

NOTES:

FOR SECTION A-A SEE NEXT SHEET.

FOR ELEVATION C-C SEE SHEET 18.

F.F.-DENOTES FRONT FACE

B.F.-DENOTES BACK FACE

NO.	DATE	BY	CHECK	DESIGN	REVISION / SUBMITTAL

DESIGNED BY: NRW | CHECKED BY: JSM
DRAWN BY: PGR | CHECKED BY: NRW

AECOM Kimley»Horn

90% SUBMISSION - 01/22/16

METROPOLITAN COUNCIL

SOUTHWEST Green Line LRT Extension

CIVIL - VOLUME 4F
CEDAR LAKE CHANNEL TRAIL BRIDGE
BRIDGE R06XX
NORTH ABUTMENT REINFOCEMENT 2

DISCIPLINE: STRUCTURES

SHEET NAME: CBRR06XX-BRG-ABT-013

SHEET 16 OF 41

Jan, 16 2016 10:40 am V:\3400_ADC\CAD\SEGMENT E3\PLAN SHEETS\STRUCTURES\R06XX CLCH-TRL\CBRR06XX-BRG-ABUT.dwg By: Nick.Williamson

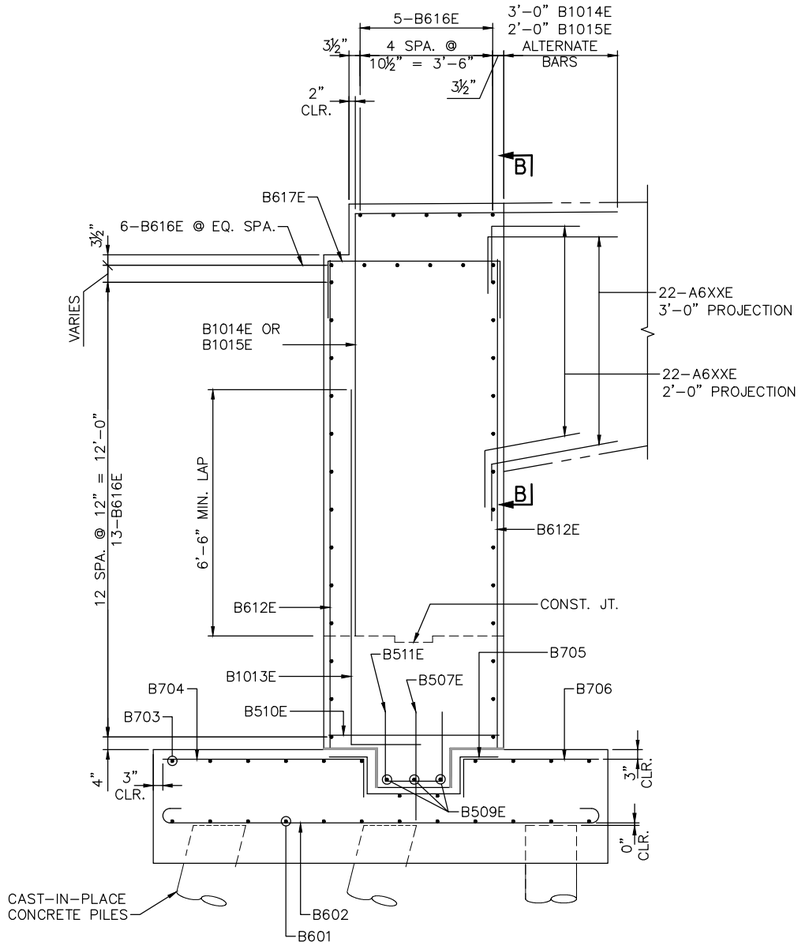

SECTION A–A

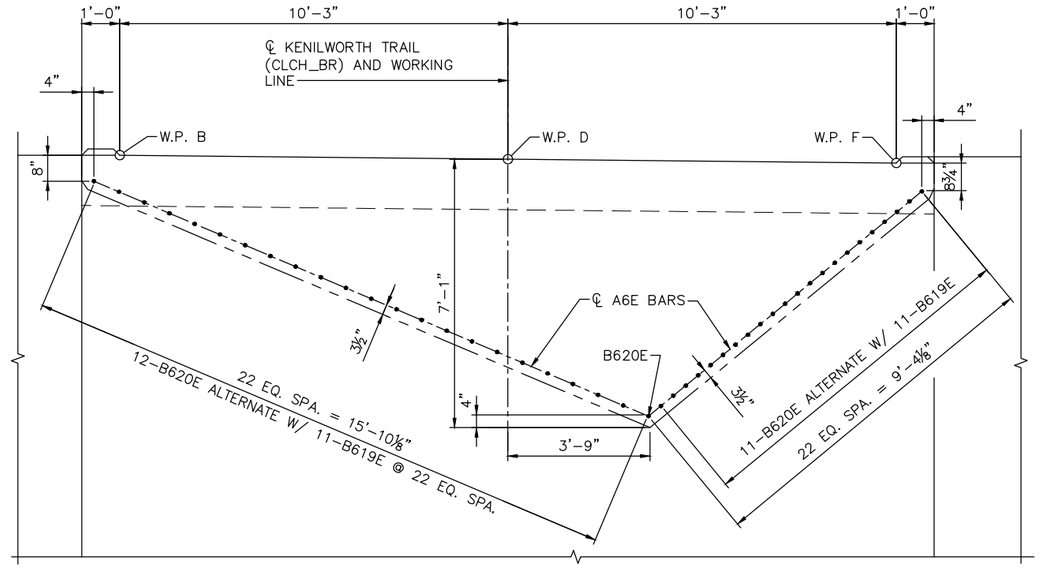

SECTION B–B

Jan, 16 2016 10:40 am V:\3400_ADC\CAD\SEGMENT E3\PLAN SHEETS\STRUCTURES\R06XX CLCH-TRL\CBRR06XX-BRG-ABUT.dwg By: Nick.Williamson

NO.	DATE	BY	CHECK	DESIGN	REVISION / SUBMITTAL

DESIGNED BY: NRW | CHECKED BY: JSM
DRAWN BY: PGR | CHECKED BY: NRW

AECOM Kimley»Horn

90% SUBMISSION - 01/22/16

METROPOLITAN COUNCIL

SOUTHWEST Green Line LRT Extension

CIVIL - VOLUME 4F
CEDAR LAKE CHANNEL TRAIL BRIDGE
BRIDGE R06XX
NORTH ABUTMENT REINFORCEMENT 3

DISCIPLINE: STRUCTURES
SHEET NAME: CBRR06XX-BRG-ABT-014

SHEET 17 OF 41

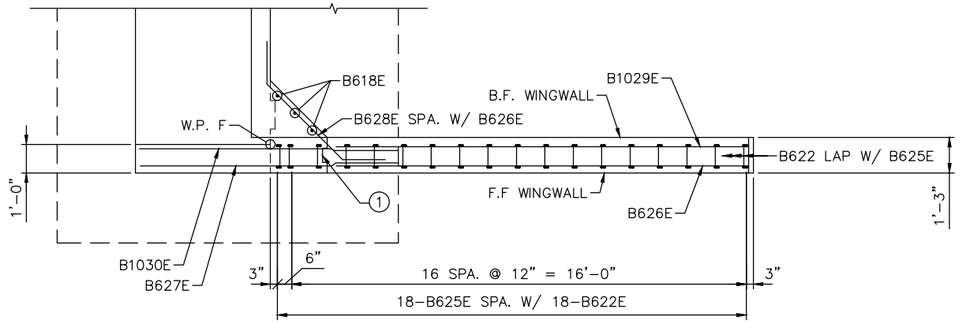

PLAN NORTHEAST WINGWALL

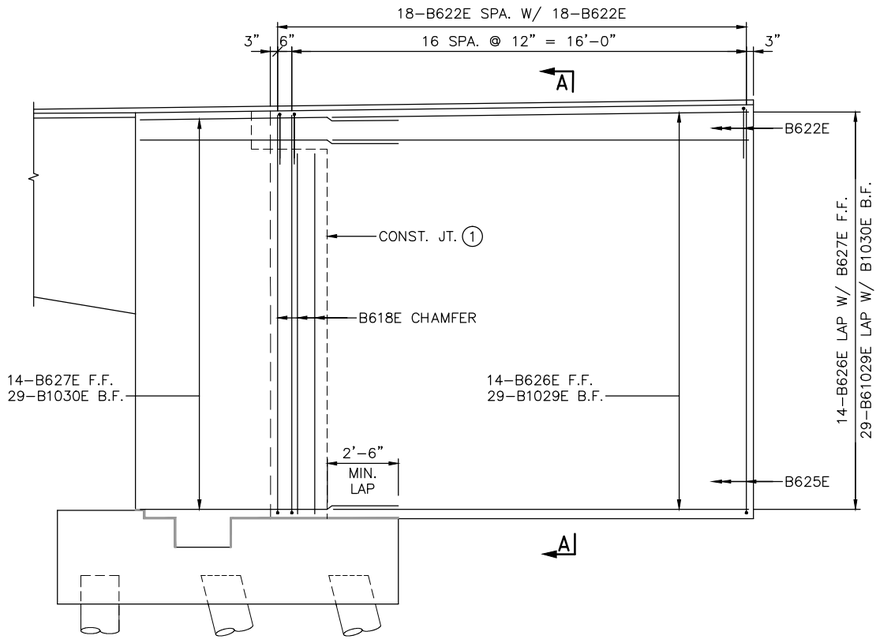

ELEVATION C-C
NORTHEAST WINGWALL

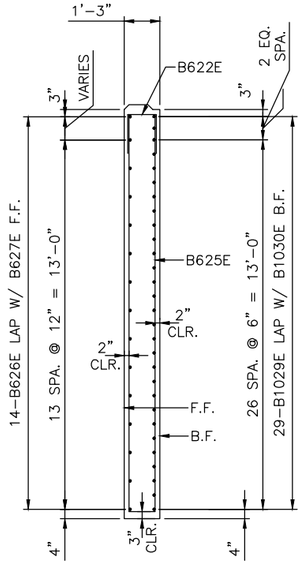

SECTION A-A

NOTES:

F.F.-DENOTES FRONT FACE

B.F.-DENOTES BACK FACE

(1) CONSTRUCTION JOINT 2"X6" KEY

NO.	DATE	BY	CHECK	DESIGN	REVISION / SUBMITTAL

DESIGNED BY: NRW | CHECKED BY: JSM
DRAWN BY: PGR | CHECKED BY: NRW

AECOM Kimley»Horn

90% SUBMISSION - 01/22/16

METROPOLITAN COUNCIL

SOUTHWEST Green Line LRT Extension

CIVIL - VOLUME 4F
CEDAR LAKE CHANNEL TRAIL BRIDGE
BRIDGE R06XX
NORTH ABUTMENT REINFORCEMENT 4

DISCIPLINE: STRUCTURES
SHEET NAME: CBRR06XX-BRG-ABT-015

SHEET 18 OF 41

Jan, 16 2016 10:40 am V:\3400_ADC\CAD\SEGMENT E3\PLAN SHEETS\STRUCTURES\R06XX CLCH-TRL\CBRR06XX-BRG-ABUT.dwg By: Nick.Williamson

BILL OF REINFORCEMENT FOR NORTH ABUTMENT				
BAR	NO.	LENGTH	SHAPE	LOCATION
B601	12	'-"	BENT	TRANS. FTG. BOTT.
B602	25	'-"	BENT	LONG. FTG. TOP
B703	13	'-"	STR.	TRANS. FTG.TOP
B704	23	'-"	BENT	TRANS. FTG.TOP
B705	4	'-"	STR.	TRANS. FTG.TOP
B706	23	'-"	BENT	TRANS. FTG.TOP
B707	4	'-"	STR.	TRANS. FTG.TOP
B08	0	'-"	0	0
B509E	3	'-"	STR.	TRANS. ABUT. KEY
B510E	23	'-"	STR.	TRANS. ABUT. KEY
B511E	23	'-"	BENT	TRANS. ABUT. KEY
B612E	68	'-"	STR.	ABUT. VERT. E.F.
B1013E	45	'-"	BENT	ABUT. VERT. B.F.
B1014E	22	'-"	BENT	ABUT. / SLAB TOP
B1015E	23	'-"	BENT	ABUT. / SLAB TOP
B616E	24	'-"	STR.	ABUT. HORZ. E.F.
B617E	23	'-"	BENT	ABUT. TIE
B618E	3	'-"	STR.	CHAMFER VERT.
B619E	22	'-"	BENT	ABUT. / SLAB BOTT.
B620E	23	'-"	BENT	ABUT. / SLAB BOTT.
B621E	5	'-"	BENT	NW WINGWALL VERT.
B622E	23	'-"	BENT	NW WINGWALL VERT.
B623E	18	'-"	STR.	NW WINGWALL HORZ.
B624E	2	'-"	STR.	NW WINGWALL HORZ.
B625E	18	'-"	BENT	NE WINGWALL VERT.
B626E	14	'-"	STR.	NE WINGWALL HORZ. F.F.
B627E	14	'-"	STR.	NE WINGWALL HORZ. F.F.
B628E	14	'-"	BENT	NE WINGWALL CHAMFER
B1029E	29	'-"	STR.	NE WINGWALL HORZ. B.F.
B1030E	29	'-"	STR.	NE WINGWALL HORZ. B.F.

Jan, 16 2016 10:40 am V:\3400_ADC\CAD\SEGMENT E3\PLAN SHEETS\STRUCTURES\R06XX CLCH-TRL\CBRR06XX-BRG-ABUT.dwg By: Nick.Williamson

NO.	DATE	BY	CHECK	DESIGN	REVISION / SUBMITTAL

DESIGNED BY: NRW | CHECKED BY: JSM
DRAWN BY: PGR | CHECKED BY: JSM

AECOM Kimley»Horn

90% SUBMISSION - 01/22/16

METROPOLITAN COUNCIL

SOUTHWEST Green Line LRT Extension

CIVIL - VOLUME 4F
CEDAR LAKE CHANNEL TRAIL BRIDGE
BRIDGE R06XX
NORTH ABUTMENT REINFORCEMENT 5

DISCIPLINE: STRUCTURES

SHEET NAME: CBRR06XX-BRG-ABT-016

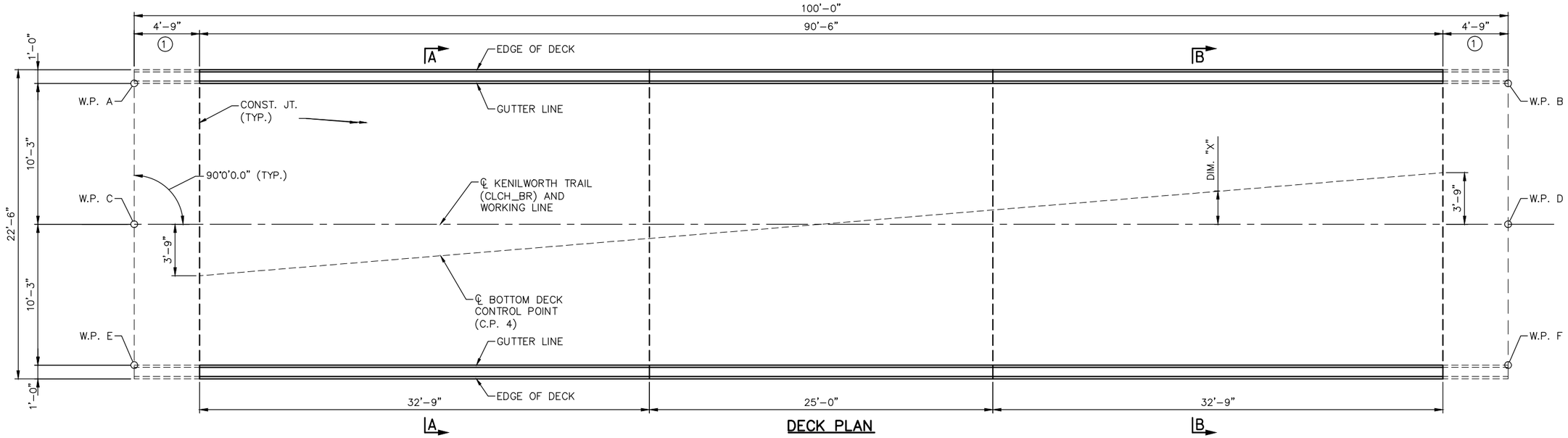

DECK PLAN

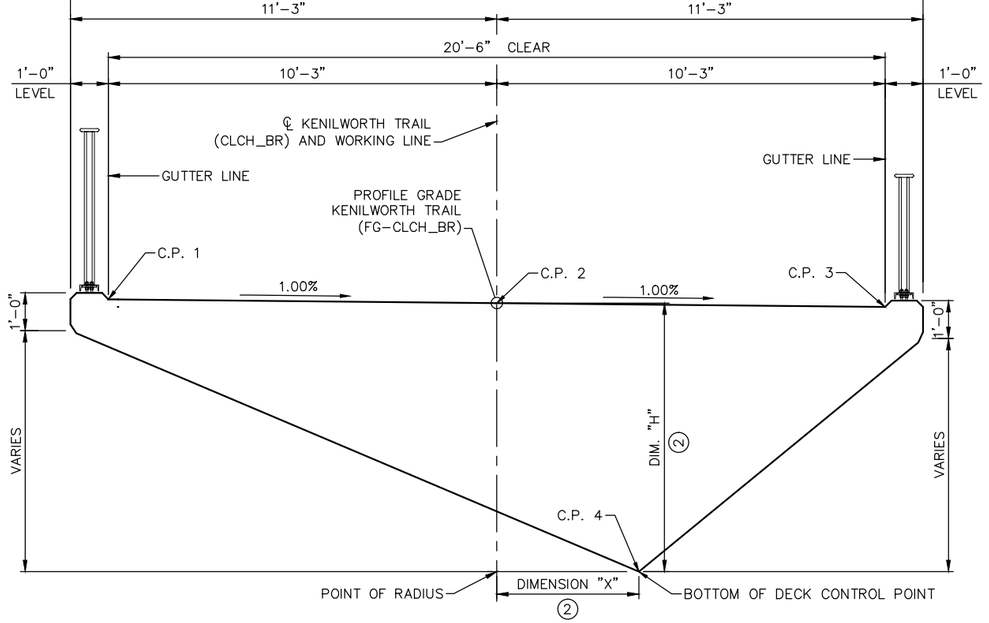

SECTION A-A

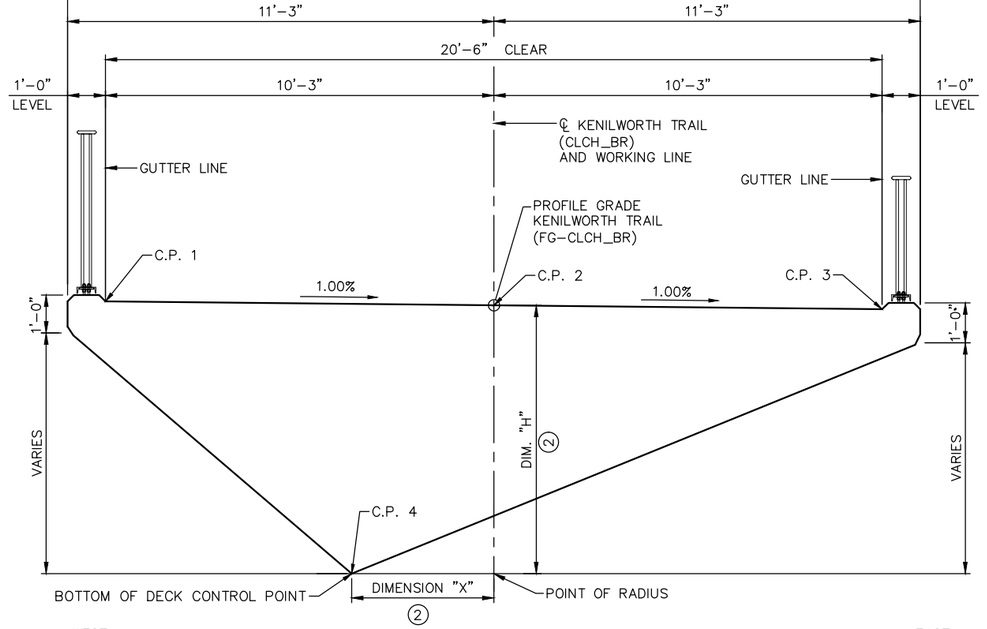

SECTION B-B

NOTES:

C.P. – DENOTES CONTROL POINT SEE SHEET 22.

(1) POURED WITH ABUTMENT, SEE POURING SEQUENCE.

(2) SEE SHEET 22 FOR DIMENSION DATA.

NO.	DATE	BY	CHECK	DESIGN	REVISION / SUBMITTAL

DESIGNED BY: NRW | CHECKED BY: JSM
DRAWN BY: PGR | CHECKED BY: NRW

AECOM Kimley»Horn

90% SUBMISSION - 01/22/16

METROPOLITAN COUNCIL

SOUTHWEST Green Line LRT Extension

CIVIL - VOLUME 4F
CEDAR LAKE CHANNEL TRAIL BRIDGE
BRIDGE R06XX
SUPERSTRUCTURE DETAILS & REINF. 1

DISCIPLINE: STRUCTURES
SHEET NAME: CBRR06XX-BRG-SUP-001

SHEET 20 OF 41

Jan, 16 2016 10:40 am V:\3400_ADC\CAD\SEGMENT E3\PLAN SHEETS\STRUCTURES\R06XX CLCH-TRL\CBRR06XX-BRG-SUP.dwg By: Nick.Williamson

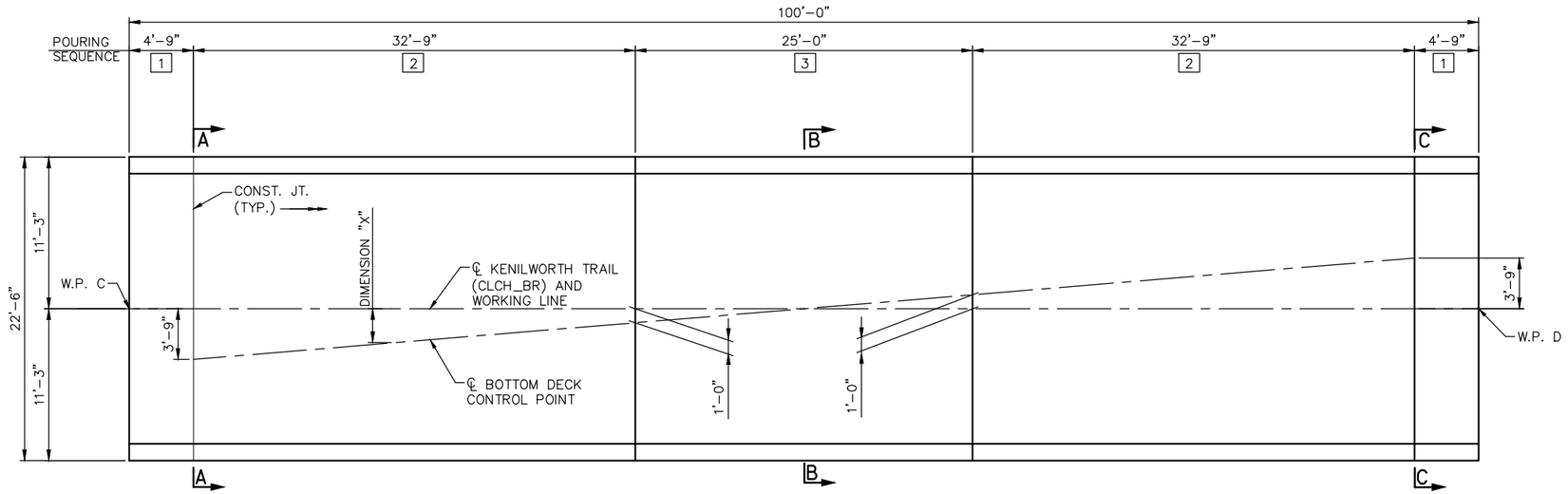

POURING SEQUENCE PLAN

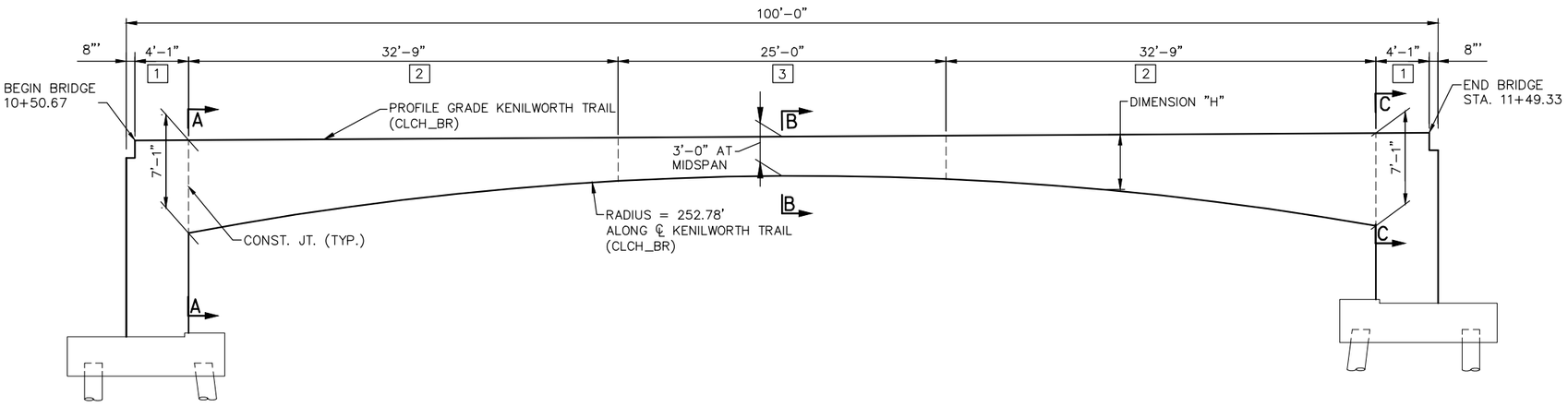

POURING SEQUENCE ELEVATION

NOTES:

72 HOUR TIME DELAY REQUIRED BETWEEN ADJACENT POURS TO ALLOW FOR SHRINKAGE.

SUPERSTRUCTURE CONCRETE TO BE 3JM.

FOR SECTIONS A–A, B–B, AND C–C, SEE NEXT SHEET.

FOR DIMENSIONS, SEE "DIMENSION DATA TABLE" ON NEXT SHEET.

FOR REQUIRED CLEARANCES DURING CONSTRUCTION, SEE STAGING PLANS.

POURING SEQUENCE:

1 ABUTMENTS

2 SUPERSTRUCTURE END POURS

3 SUPERSTRUCTURE CLOSURE POUR

ALL PORTIONS OF THE SUPERSTRUCTURE MUST BE SUPPORTED UNTIL ALL POURS ARE COMPLETE.

NO.	DATE	BY	CHECK	DESIGN	REVISION / SUBMITTAL

DESIGNED BY: NRW | CHECKED BY: JSM
DRAWN BY: PGR | CHECKED BY: NRW

AECOM Kimley»Horn

90% SUBMISSION - 01/22/16

METROPOLITAN COUNCIL

SOUTHWEST Green Line LRT Extension

CIVIL - VOLUME 4F
CEDAR LAKE CHANNEL TRAIL BRIDGE
BRIDGE R06XX
SUPERSTRUCTURE DETAILS & REINF. 2

DISCIPLINE: STRUCTURES
SHEET NAME: CBRR06XX-BRG-SUP-002

SHEET 21 OF 41

Jan, 16 2016 10:40 am V:\3400_ADC\CAD\SEGMENT E3\PLAN SHEETS\STRUCTURES\R06XX CLCH-TRL\CBRR06XX-BRG-SUP.dwg By: Nick.Williamson

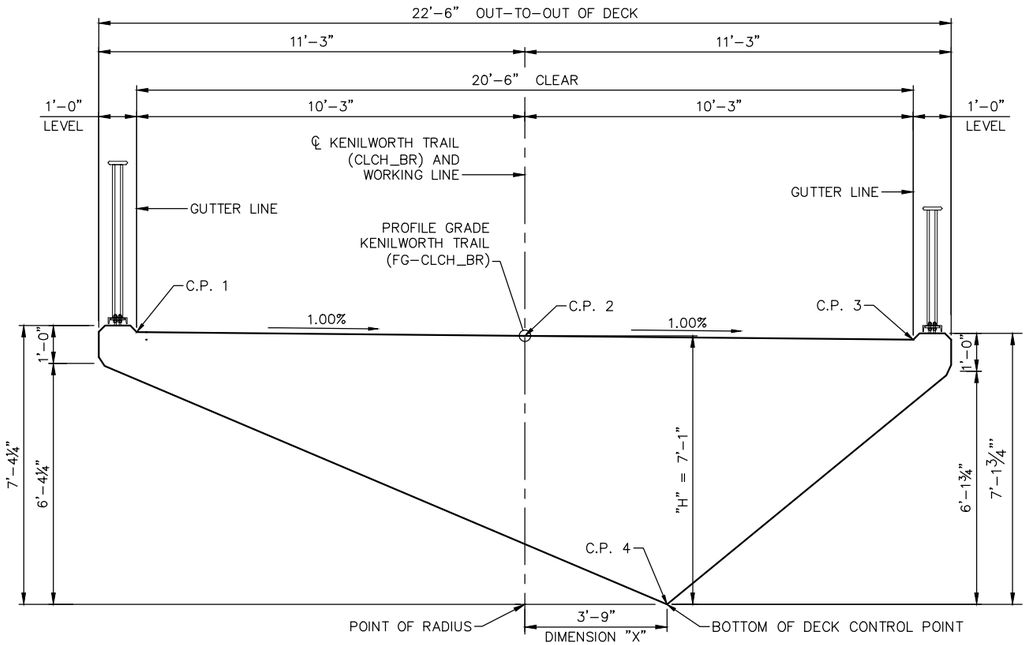

SECTION A-A

(SECTION AT F.F. SOUTH ABUTMENT
LOOKING IN DIRECTION OF STATIONING)

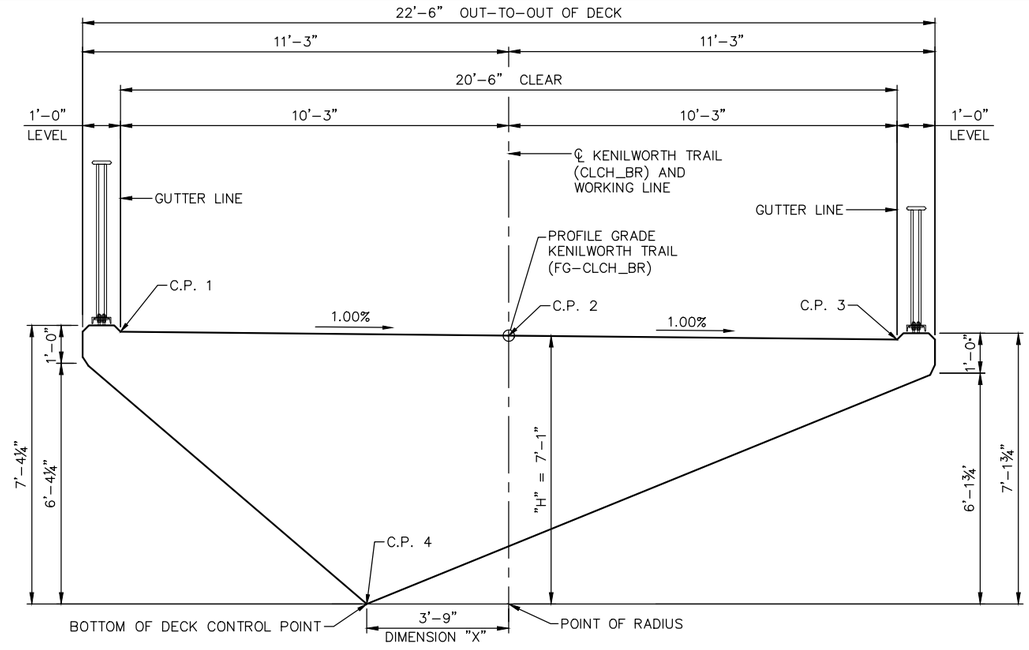

SECTION C-C

(SECTION AT F.F. NORTH ABUTMENT
LOOKING IN DIRECTION OF STATIONING)

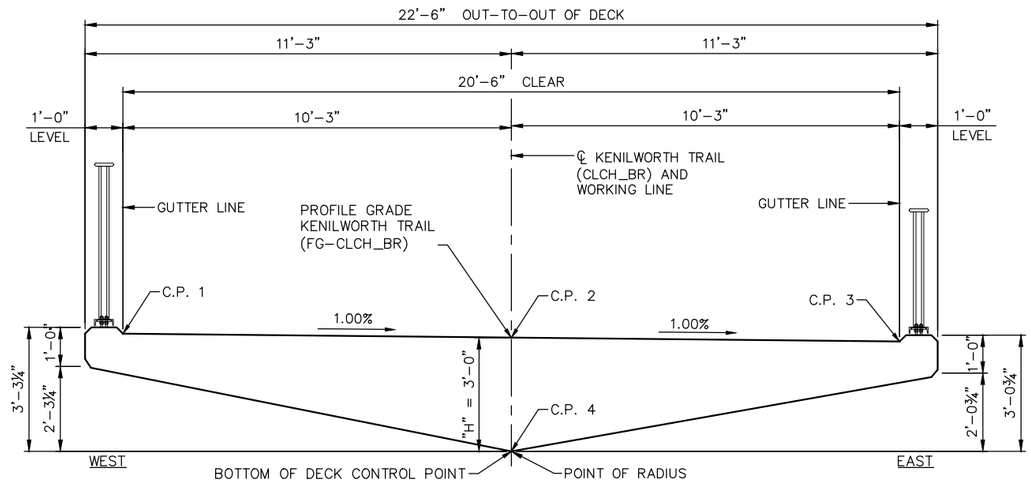

SECTION B-B

(SECTION AT MIDSPAN
LOOKING IN DIRECTION OF STATIONING)

DIMENSION DATA TABLE						
STATION	DIMENSION "H"	DIMENSION "X"	C.P. 1 ELEV.	C.P. 2 ELEV.	C.P. 3 ELEV.	C.P. 4 ELEV.
10+54.75	7.08	3.75	868.82	868.72	868.62	861.63
10+63.80	5.60	3.00	868.87	868.77	868.67	863.17
10+72.85	4.46	2.25	868.93	868.83	868.73	864.37
10+81.90	3.65	1.50	868.98	868.88	868.78	865.23
10+90.95	3.16	0.75	869.03	868.93	868.83	865.78
11+00.00	3.00	0.00	869.09	868.99	868.89	865.99
11+09.05	3.16	0.75	869.14	869.04	868.94	865.88
11+18.10	3.65	1.50	869.20	869.10	869.00	865.45
11+27.15	4.46	2.25	869.25	869.15	869.05	864.69
11+36.20	5.60	3.00	869.31	869.21	869.11	863.60
11+45.25	7.08	3.75	869.36	869.26	869.16	862.18

NOTES:

F.F.-DENOTES FRONT FACE

NO.	DATE	BY	CHECK	DESIGN	REVISION / SUBMITTAL

DESIGNED BY: NRW | CHECKED BY: JSM
DRAWN BY: PGR | CHECKED BY: NRW

AECOM Kimley»Horn

90% SUBMISSION - 01/22/16

METROPOLITAN COUNCIL

SOUTHWEST Green Line LRT Extension

CIVIL - VOLUME 4F
CEDAR LAKE CHANNEL TRAIL BRIDGE
BRIDGE R06XX
SUPERSTRUCTURE DETAILS & REINF. 3

DISCIPLINE: STRUCTURES
SHEET NAME: CBRR06XX-BRG-SUP-003

SHEET 22 OF 41

Jan, 16 2016 10:40 am V:\3400_ADC\CAD\SEGMENT E3\PLAN SHEETS\STRUCTURES\R06XX CLCH-TRL\CBRR06XX-BRG-SUP.dwg By: Nick.Williamson

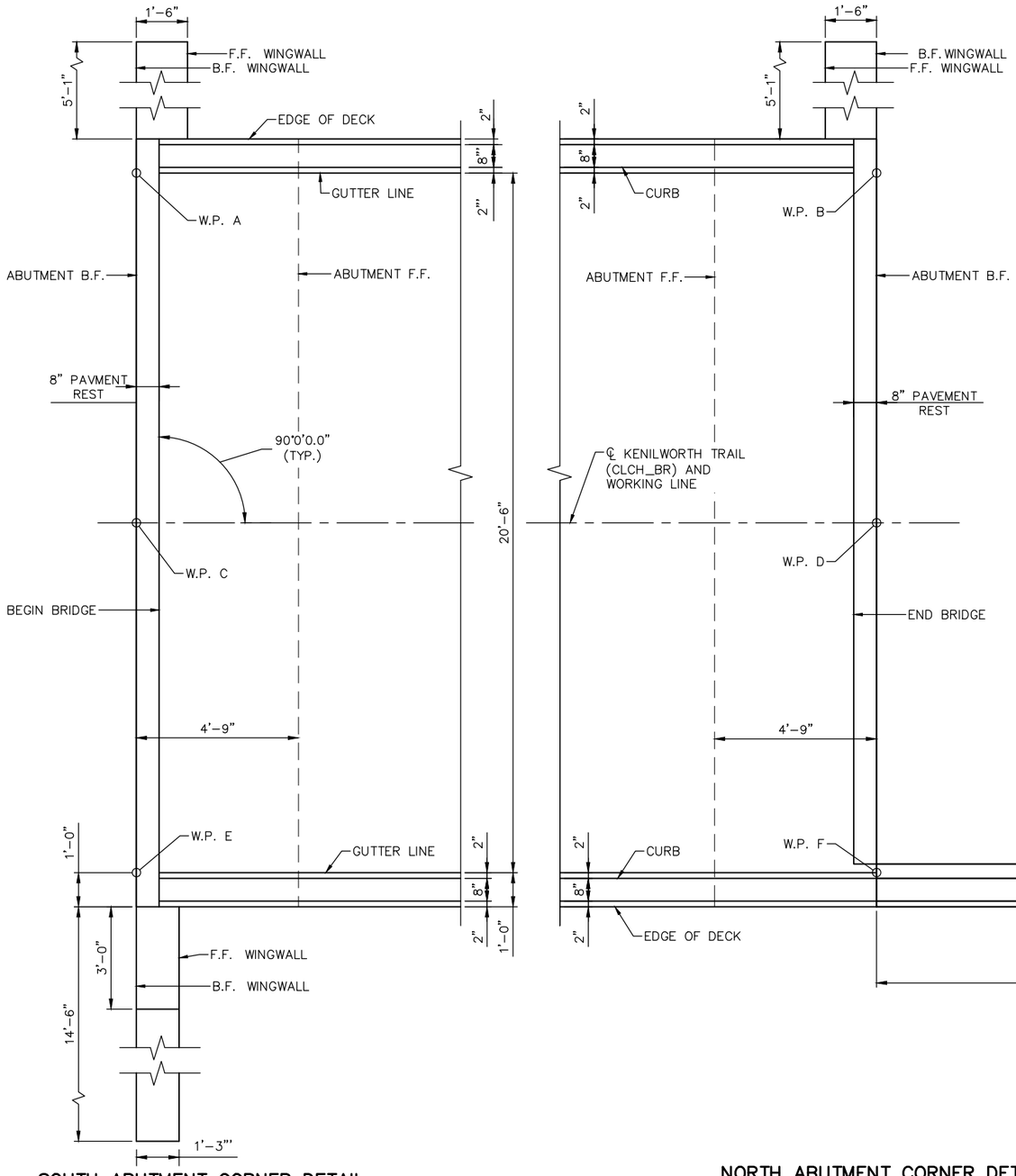

SOUTH ABUTMENT CORNER DETAIL

NORTH ABUTMENT CORNER DETAIL

NOTES:

F.F. – DENOTES FRONT FACE

B.F. – DENOTES BACK FACE

NO.	DATE	BY	CHECK	DESIGN	REVISION / SUBMITTAL

DESIGNED BY: NRW | CHECKED BY: JSM

DRAWN BY: PGR | CHECKED BY: NRW

AECOM Kimley»Horn

90% SUBMISSION - 01/22/16

METROPOLITAN COUNCIL

SOUTHWEST Green Line LRT Extension

CIVIL - VOLUME 4F
CEDAR LAKE CHANNEL TRAIL BRIDGE
BRIDGE R06XX
SUPERSTRUCTURE DETAILS & REINF. 4

DISCIPLINE: STRUCTURES

SHEET NAME: CBRR06XX-BRG-SUP-004

SHEET 23 OF 41

Jan, 16 2016 10:40 am V:\3400_ADC\CAD\SEGMENT E3\PLAN SHEETS\STRUCTURES\R06XX CLCH-TRL\CBRR06XX-BRG-SUP.dwg By: Nick.Williamson

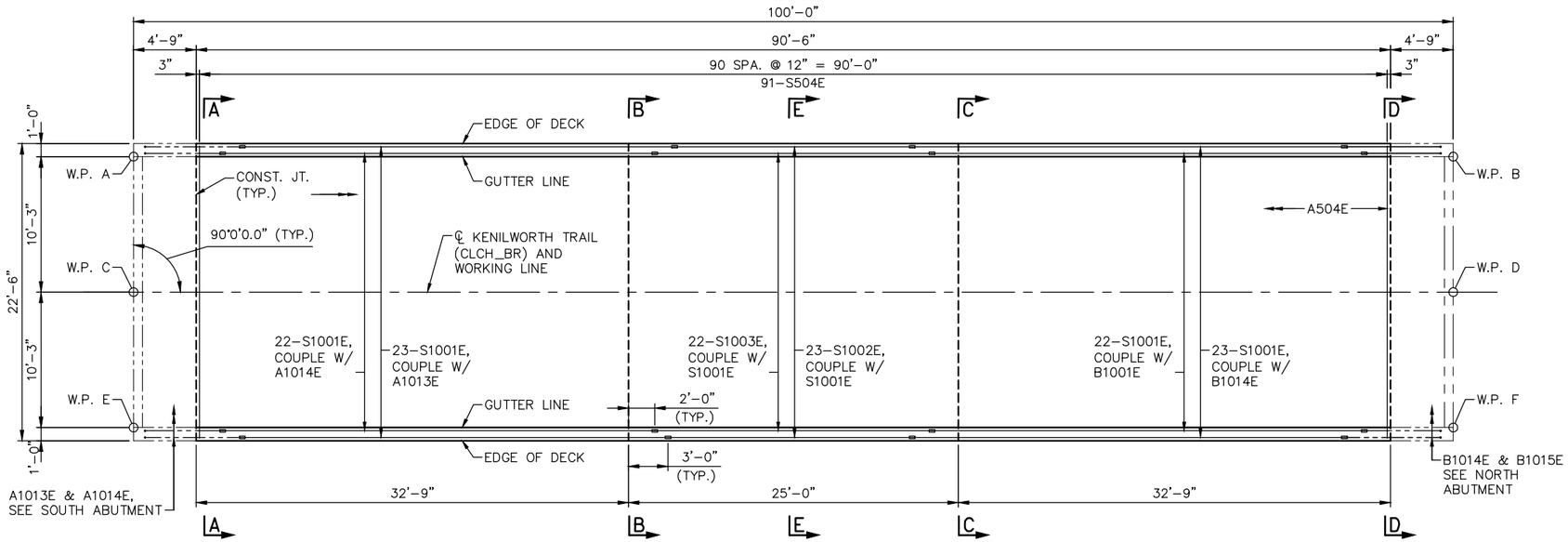

DECK PLAN – TOP REINFORCING

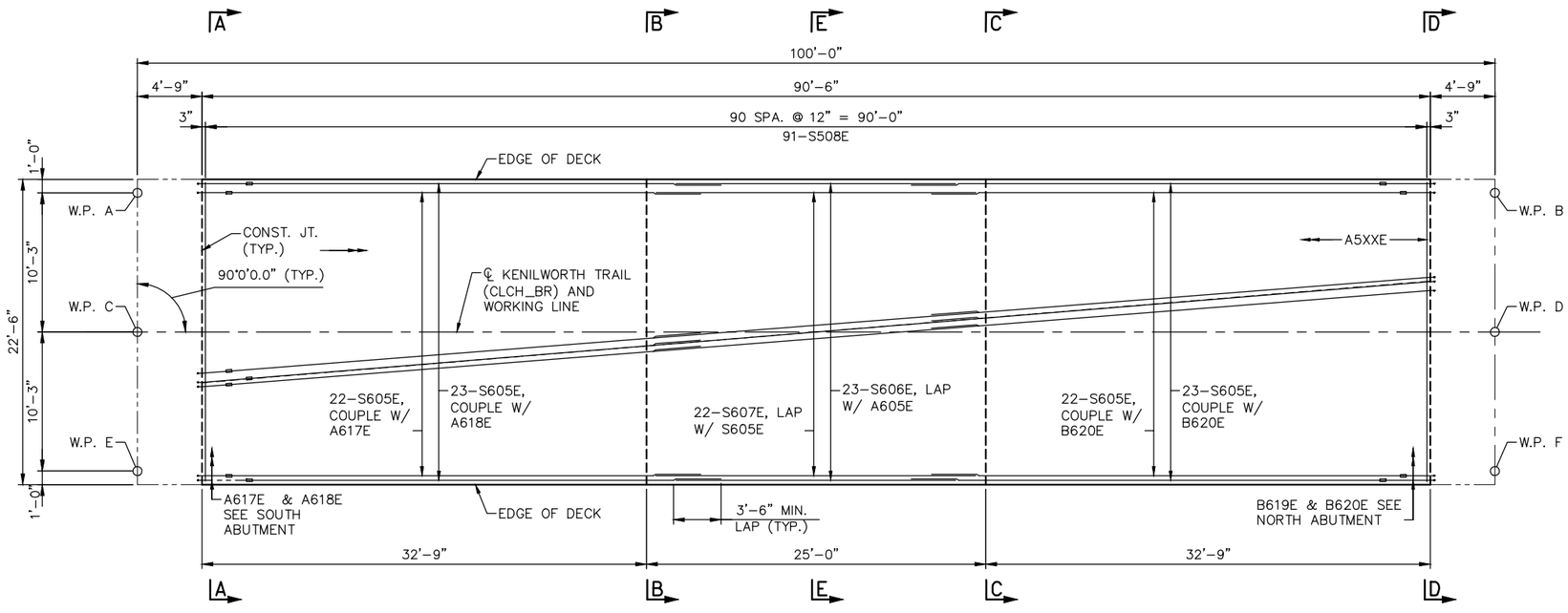

DECK PLAN – BOTTOM REINFORCING

NOTES:

FOR SECTIONS A–A, B–B. C–C AND D–D, SEE NEXT SHEET.

FOR SECTION E–E SEE SHEET 26.

▭ – DENOTES MECHANICAL COUPLER

NO.	DATE	BY	CHECK	DESIGN	REVISION / SUBMITTAL

DESIGNED BY: NRW | CHECKED BY: JSM
DRAWN BY: PGR | CHECKED BY: NRW

AECOM Kimley»Horn

90% SUBMISSION - 01/22/16

METROPOLITAN COUNCIL

SOUTHWEST Green Line LRT Extension

CIVIL - VOLUME 4F
CEDAR LAKE CHANNEL TRAIL BRIDGE
BRIDGE R06XX
SUPERSTRUCTURE DETAILS & REINF. 5

DISCIPLINE: STRUCTURES
SHEET NAME: CBRR06XX-BRG-SUP-005

SHEET 24 OF 41

Jan, 16 2016 10:40 am V:\3400_ADC\CAD\SEGMENT E3\PLAN SHEETS\STRUCTURES\R06XX CLCH-TRL\CBRR06XX-BRG-SUP.dwg By: Nick.Williamson

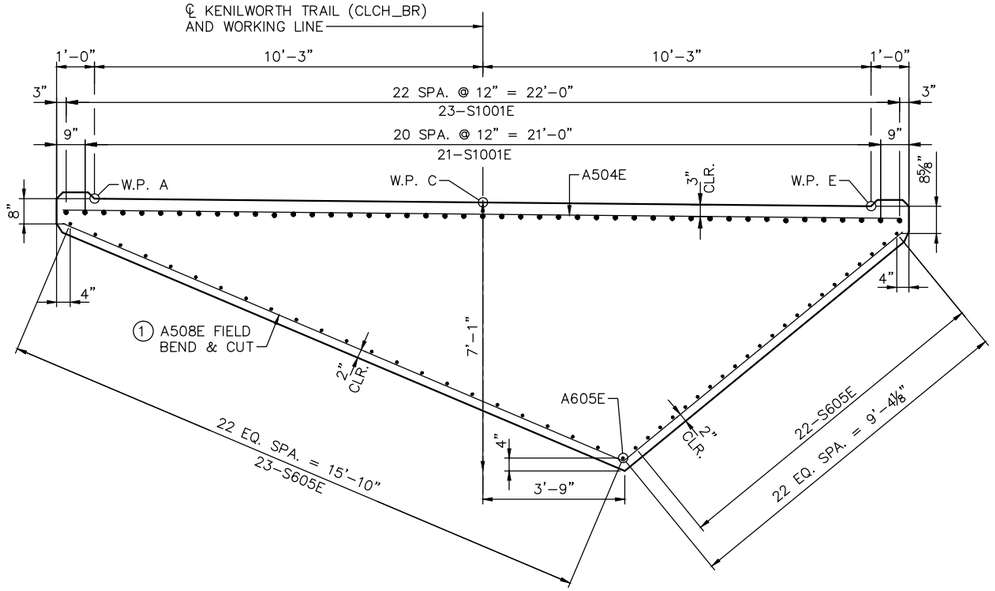

SECTION A–A

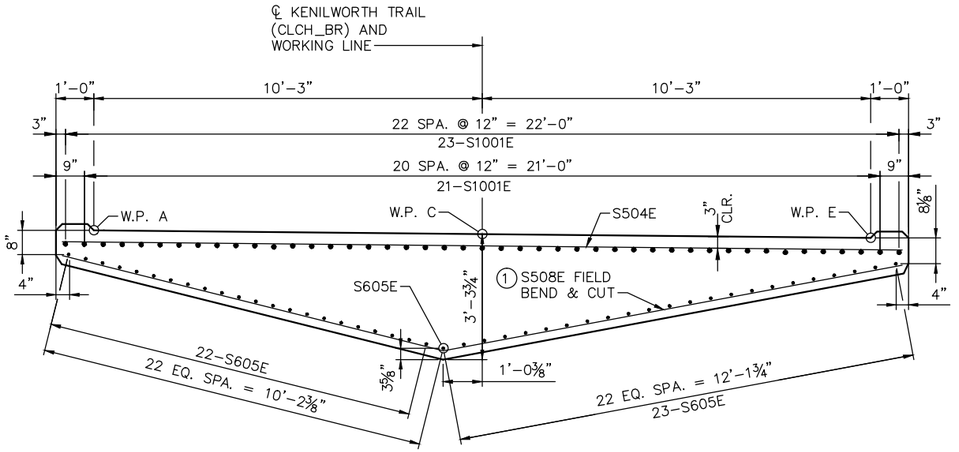

SECTION C–C

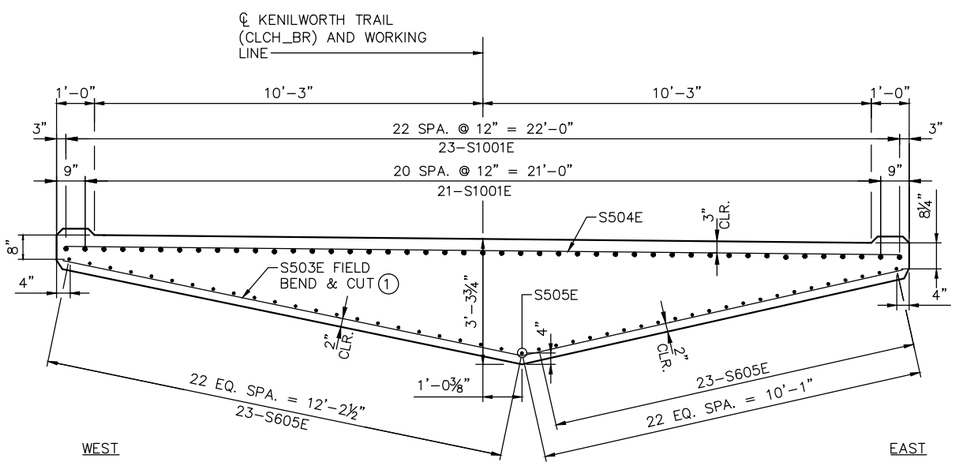

SECTION B–B

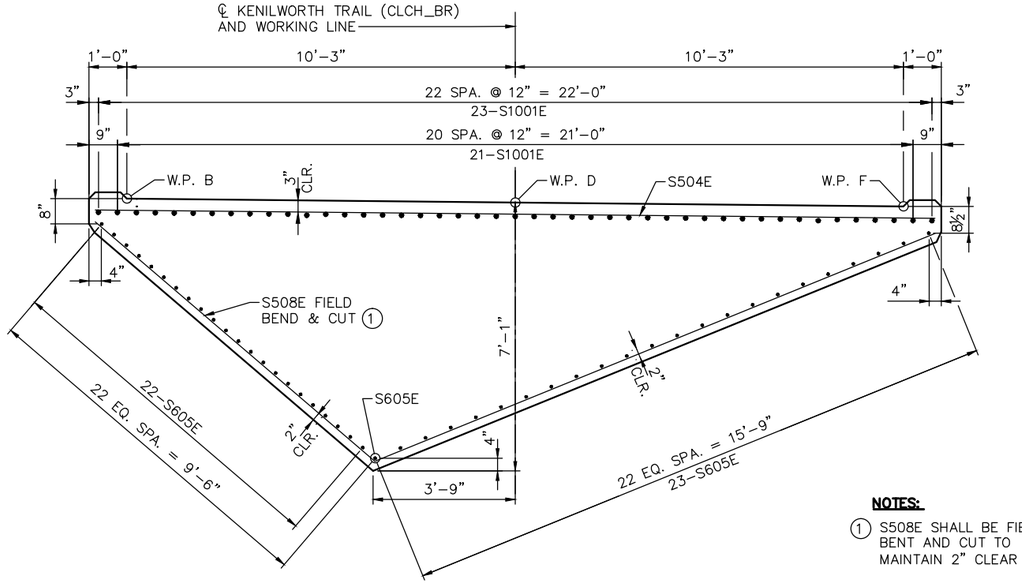

SECTION D–D

NOTES:

1. S508E SHALL BE FIELD BENT AND CUT TO MAINTAIN 2" CLEAR

NO.	DATE	BY	CHECK	DESIGN	REVISION / SUBMITTAL

DESIGNED BY: NRW | CHECKED BY: JSM
DRAWN BY: PGR | CHECKED BY: NRW

AECOM Kimley»Horn

90% SUBMISSION - 01/22/16

METROPOLITAN COUNCIL

SOUTHWEST Green Line LRT Extension

CIVIL - VOLUME 4F
CEDAR LAKE CHANNEL TRAIL BRIDGE
BRIDGE R06XX
SUPERSTRUCTURE DETAILS & REINF. 6

DISCIPLINE: STRUCTURES

SHEET NAME: CBRR06XX-BRG-SUP-006

SHEET 25 OF 41

Jan, 16 2016 10:40 am V:\3400_ADC\CAD\SEGMENT E3\PLAN SHEETS\STRUCTURES\R06XX CLCH-TRL\CBRR06XX-BRG-SUP.dwg By: Nick.Williamson

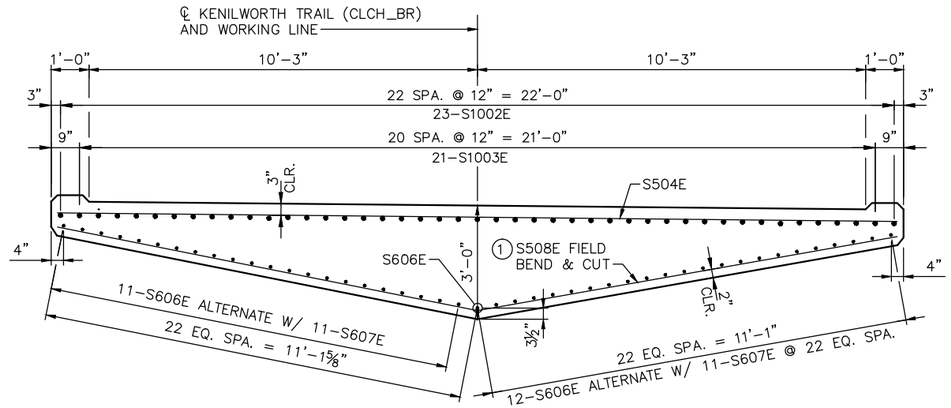

WEST

SECTION E-E

EAST

BILL OF REINFORCEMENT FOR SUPERSTRUCTURE				
BAR	NO.	LENGTH	SHAPE	LOCATION
S1001E	90	32'-9"	STR.	LONG. TOP POUR 2
S1002E	23	19'-0"	STR.	LONG. TOP POUR 2
S1003E	22	21'-0"	STR.	LONG. TOP POUR 3
S504E	91	22'-2"	STR.	TRANS. TOP
S605E	90	35'-2"	STR.	LONG. BOTTOM POUR 2
S606E	23	22'-0"		LONG. BOTTOM POUR 2
S607E	22	24'-0"	STR.	LONG. BOTTOM POUR 3
S508E	91	25'-3"	STR.	TRANS. BOTTOM

NOTES:

1. S508E SHALL BE FIELD BENT AND CUT TO MAINTAIN 2" CLEAR

NO.	DATE	BY	CHECK	DESIGN	REVISION / SUBMITTAL

DESIGNED BY: NRW | CHECKED BY: JSM
DRAWN BY: PGR | CHECKED BY: NRW

AECOM Kimley»Horn

90% SUBMISSION - 01/22/16

METROPOLITAN COUNCIL

SOUTHWEST Green Line LRT Extension

CIVIL - VOLUME 4F
CEDAR LAKE CHANNEL TRAIL BRIDGE
BRIDGE R06XX
SUPERSTRUCTURE DETAILS & REINF. 7

DISCIPLINE: STRUCTURES
SHEET NAME: CBRR06XX-BRG-SUP-007

SHEET 26 OF 41

Jan, 16 2016 10:40 am V:\3400_ADC\CAD\SEGMENT E3\PLAN SHEETS\STRUCTURES\R06XX CLCH-TRL\CBRR06XX-BRG-SUP.dwg By: Nick.Williamson

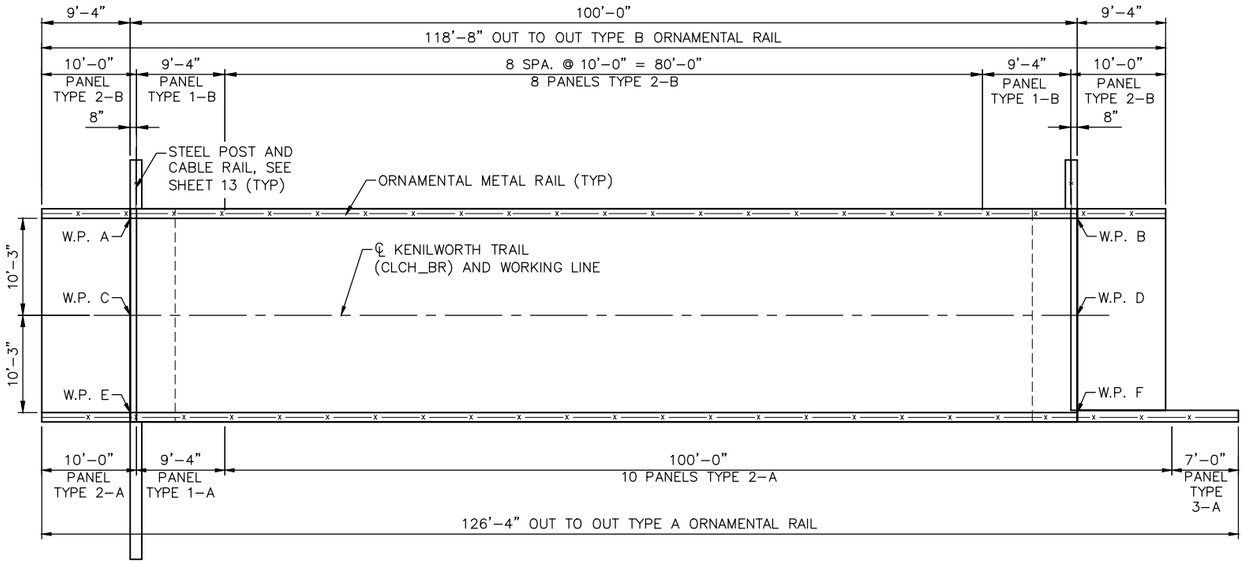

RAIL PANEL PLAN

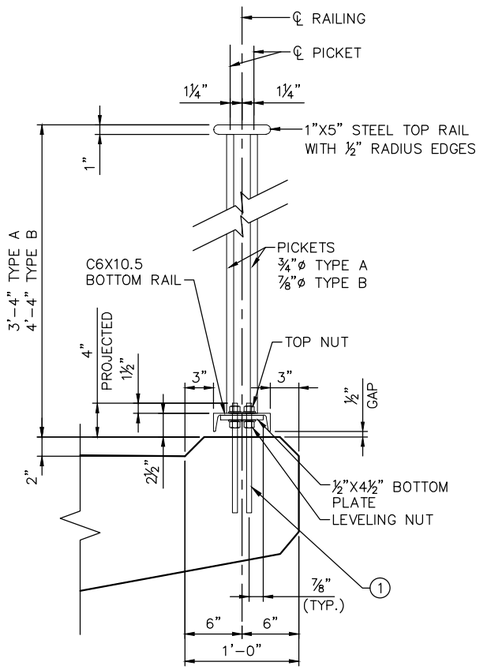

TYPICAL RAILING SECTION

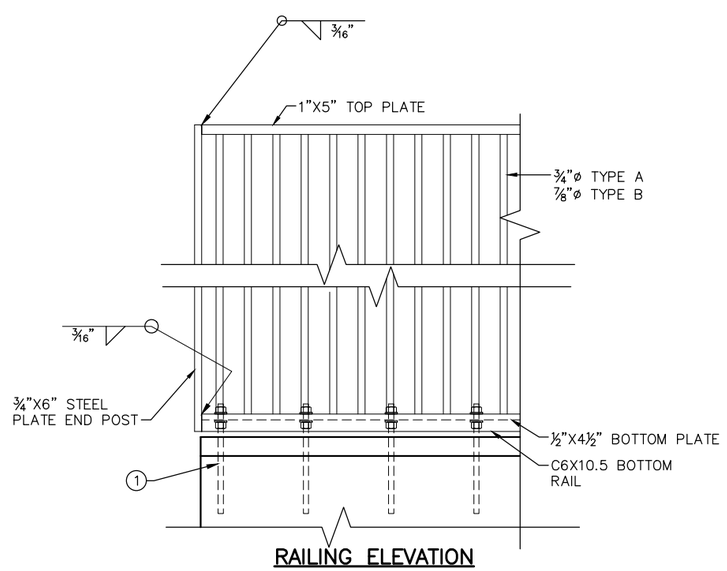

RAILING ELEVATION

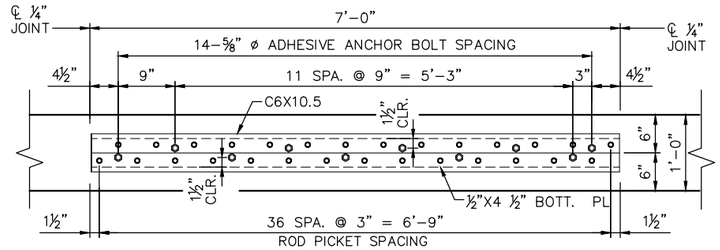

PANEL SPACING DETAIL TYPE 3

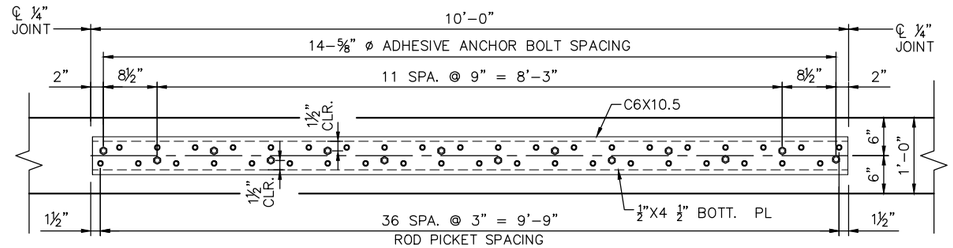

PANEL SPACING DETAIL TYPE 2

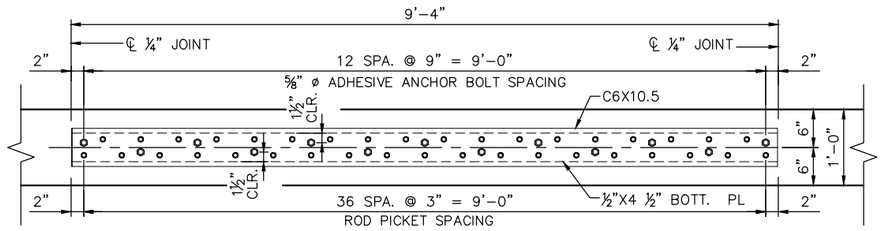

PANEL SPACING DETAIL TYPE 1

NOTES:

ALL PICKETS SHALL BE WELDED TO THE TOP AND BOTTOM RAIL USING A ¼" ALL-AROUND FILLET WELD.

STRUCTURAL STEEL SHALL CONFORM TO MnDOT SPEC. 3306.

GALVANIZE BOLTS, NUTS, WASHERS, AND ANCHORS PER MnDOT SPEC. 3392. GALVANIZE ALL OTHER STEEL PER MnDOT SPEC. 3394, AFTER FABRICATION.
COAT THE GALVANIZED RAILING, BASE PLATES, AND PROTRUDING PORTIONS OF BOLTS, NUTS, ANCHORS, AND WASHERS.

RAILING TO BE NORMAL TO GRADE. SEE SPECIAL PROVISIONS FOR REQUIREMENTS NOT INCLUDED ON THIS SHEET.

(1) ADHESIVE ANCHORAGE WITH ⅝" DIA. ANCHOR ROD PER SPEC. 3385. TYPE A WITH HEX NUT AND WASHER. PROVIDE AN ADHESIVE WITH A MINIMUM CHARACTERISTIC BOND STRENGTH IN UNCRACKED CONCRETE OF 2.0 KSI. EMBED THE ANCHORAGE NO LESS THAN 8" REGARDLESS OF CHARACTERISTIC BOND STRENGTH. DRILL THROUGH REINFORCEMENT (IF ENCOUNTERED) TO ACHIEVE MINIMUM EMBEDMENT. ENSURE HEX NUT IS IN CONTACT WITH THE ADJACENT SURFACE AND TORQUE TO 60 FT-LBS UNLESS A HIGHER TORQUE IS RECOMMENDED BY THE MANUFACTURER. PROOF LOAD TO 7.4 KIPS. SEE SPECIAL PROVISIONS FOR ADDITIONAL REQUIREMENTS.

RAIL INSTALLATION PROCEDURE:

1. INSTALL ADHESIVE ANCHORS.
2. INSTALL LEVELING NUTS AND BOTTOM PLATE. ADJUST LEVELING NUT SUCH THAT THE PLATE IS PARALLEL TO GRADE.
3. INSTALL PREFABRICATED RAIL PANELS AND TOP NUTS.

NO.	DATE	BY	CHECK	DESIGN	REVISION / SUBMITTAL

DESIGNED BY: NRW | CHECKED BY: JSM
DRAWN BY: PGR | CHECKED BY: NRW

AECOM Kimley»Horn

90% SUBMISSION - 01/22/16

METROPOLITAN COUNCIL

SOUTHWEST Green Line LRT Extension

CIVIL - VOLUME 4F
CEDAR LAKE CHANNEL TRAIL BRIDGE
BRIDGE R06XX
ORNAMENTAL RAIL DETAILS

DISCIPLINE: STRUCTURES
SHEET NAME: CBRR06XX-BRG-DTL-001

SHEET 27 OF 41

Jan, 16 2016 10:41 am V:\3400_ADC\CAD\SEGMENT E3\PLAN SHEETS\STRUCTURES\R06XX CLCH-TRL\CBRR06XX-BRG-RAL.dwg By: Nick.Williamson

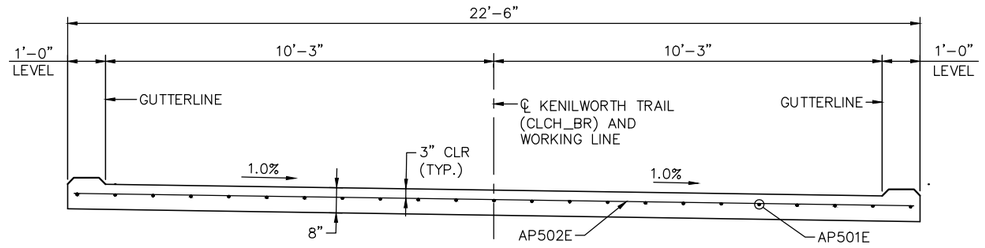

SECTION VIEW
SOUTH APPROACH PANEL
(LOOKING IN DIRECTION OF STATIONING)

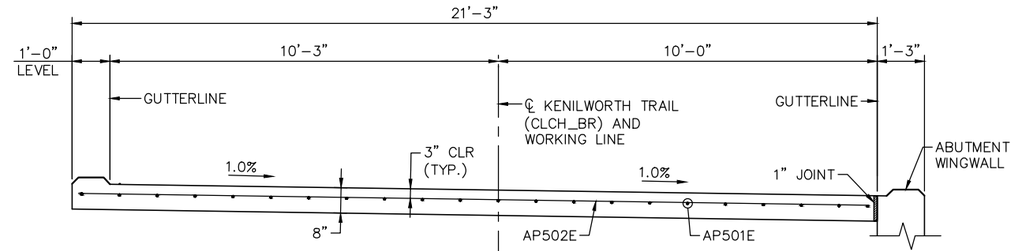

SECTION VIEW
NORTH APPROACH PANEL
(LOOKING IN DIRECTION OF STATIONING)

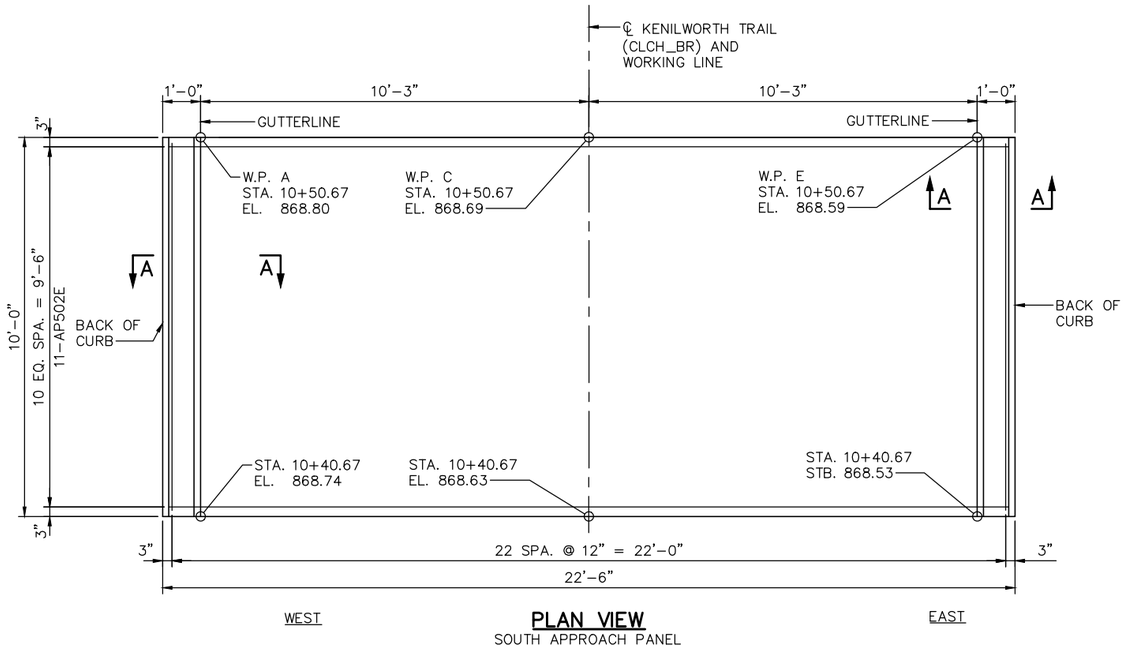

PLAN VIEW
SOUTH APPROACH PANEL

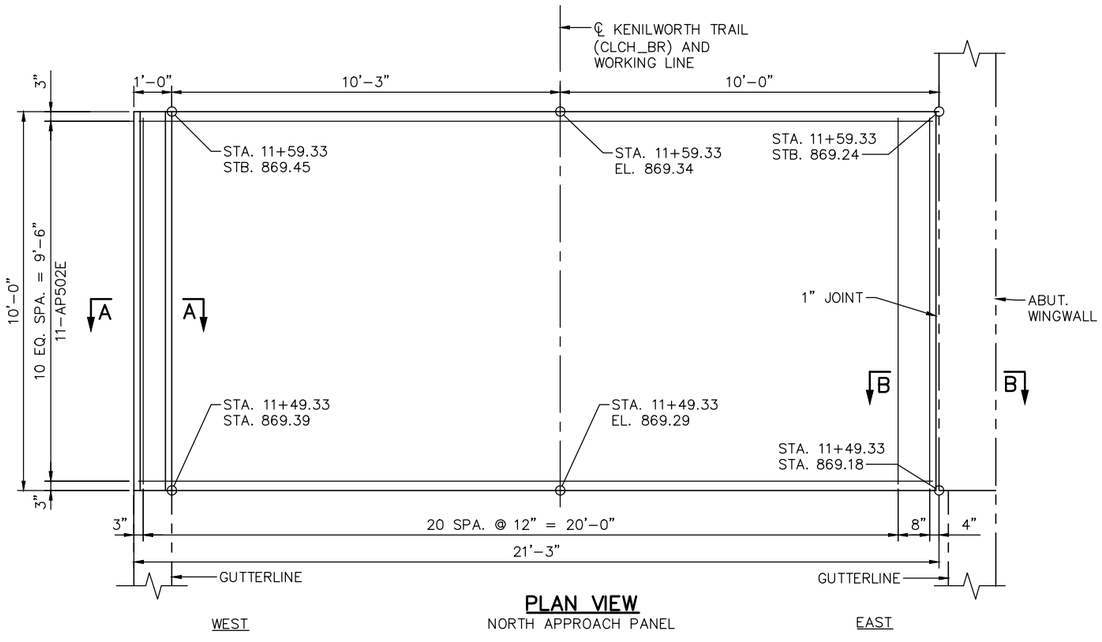

PLAN VIEW
NORTH APPROACH PANEL

NOTES:
SEE NEXT SHEET FOR SECTIONS A-A AND B-B

NO.	DATE	BY	CHECK	DESIGN	REVISION / SUBMITTAL

DESIGNED BY: NRW | CHECKED BY: JSM
DRAWN BY: PGR | CHECKED BY: NRW

AECOM Kimley»Horn

90% SUBMISSION - 01/22/16

METROPOLITAN COUNCIL

SOUTHWEST Green Line LRT Extension

CIVIL - VOLUME 4F
CEDAR LAKE CHANNEL TRAIL BRIDGE
BRIDGE R06XX
APPROACH PANEL DETAILS & REINF. 1

DISCIPLINE: STRUCTURES
SHEET NAME: CBRR06XX-BRG-DTL-002

SHEET 28 OF 41

Jan. 16 2016 10:41 am V:\3400_ADC\CAD\SEGMENT E3\PLAN SHEETS\STRUCTURES\R06XX CLCH-TRL\CBRR06XX-BRG-APP.dwg By: Nick.Williamson

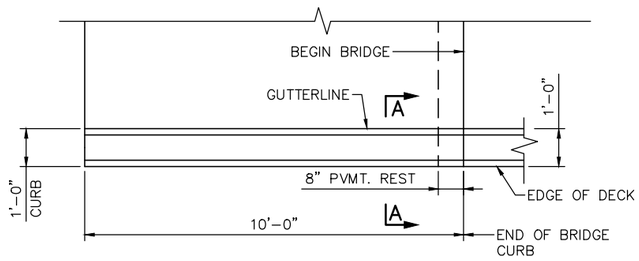

SOUTH ABUTMENT PLAN

EAST SIDE SHOWN
WEST SIDE SIMILAR

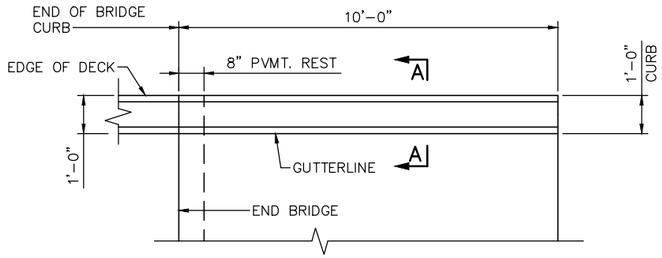

NORTH ABUTMENT PLAN

WEST SIDE SHOWN

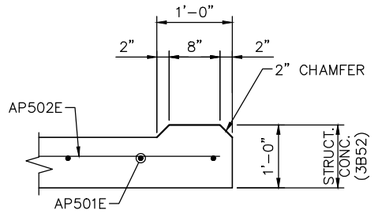

SECTION A–A

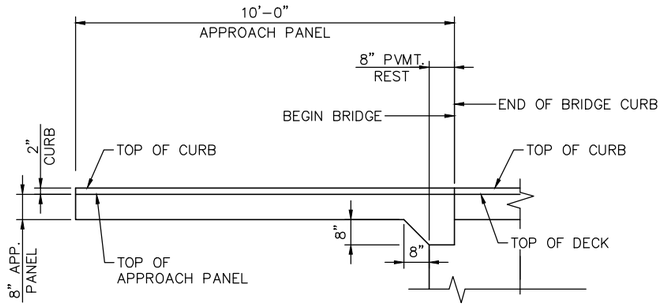

APPROACH PANEL ELEVATION

SOUTH PANEL SHOWN
NORTH PANEL SIMILAR

BILL OF REINFORCEMENT FOR SOUTH APPRAOCH PANEL				
BAR	NO.	LENGTH	SHAPE	LOCATION
AP501E	23	9'-8"	STR.	LONGITUDINAL
AP502E	11	22'-2"	STR.	TRANSVERSE

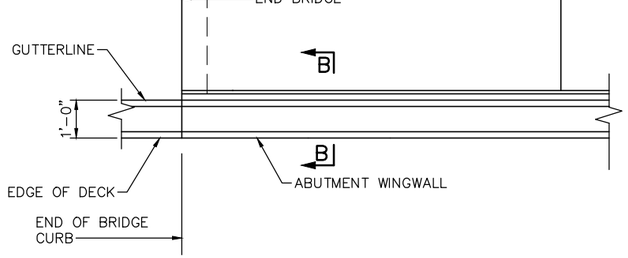

NORTH ABUTMENT PLAN

EAST SIDE SHOWN

BILL OF REINFORCEMENT FOR NORTH APPRAOCH PANEL				
BAR	NO.	LENGTH	SHAPE	LOCATION
AP501E	22	9'-8"	STR.	LONGITUDINAL
AP502E	11	20'-10"	STR.	TRANSVERSE

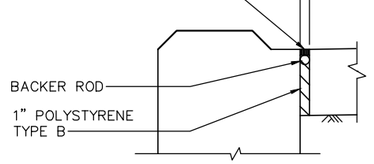

SECTION B–B

NOTES:

1. HOT POUR SEALANT SPEC. 3725. TOP OF SEALER FLUSH TO ⅛" BELOW TOP OF PAVEMENT SURFACE.

NO.	DATE	BY	CHECK	DESIGN	REVISION / SUBMITTAL

DESIGNED BY: NRW | CHECKED BY: JSM
DRAWN BY: PGR | CHECKED BY: NRW

AECOM Kimley»Horn

90% SUBMISSION - 01/22/16

METROPOLITAN COUNCIL

SOUTHWEST Green Line LRT Extension

CIVIL - VOLUME 4F
CEDAR LAKE CHANNEL TRAIL BRIDGE
BRIDGE R06XX
APPROACH PANEL DETAILS & REINF. 2

DISCIPLINE: STRUCTURES
SHEET NAME: CBRR06XX-BRG-DTL-003

SHEET 29 OF 41

Jan, 16 2016 10:41 am V:\3400_ADC\CAD\SEGMENT E3\PLAN SHEETS\STRUCTURES\R06XX CLCH-TRL\CBRR06XX-BRG-APP.dwg By: Nick.Williamson

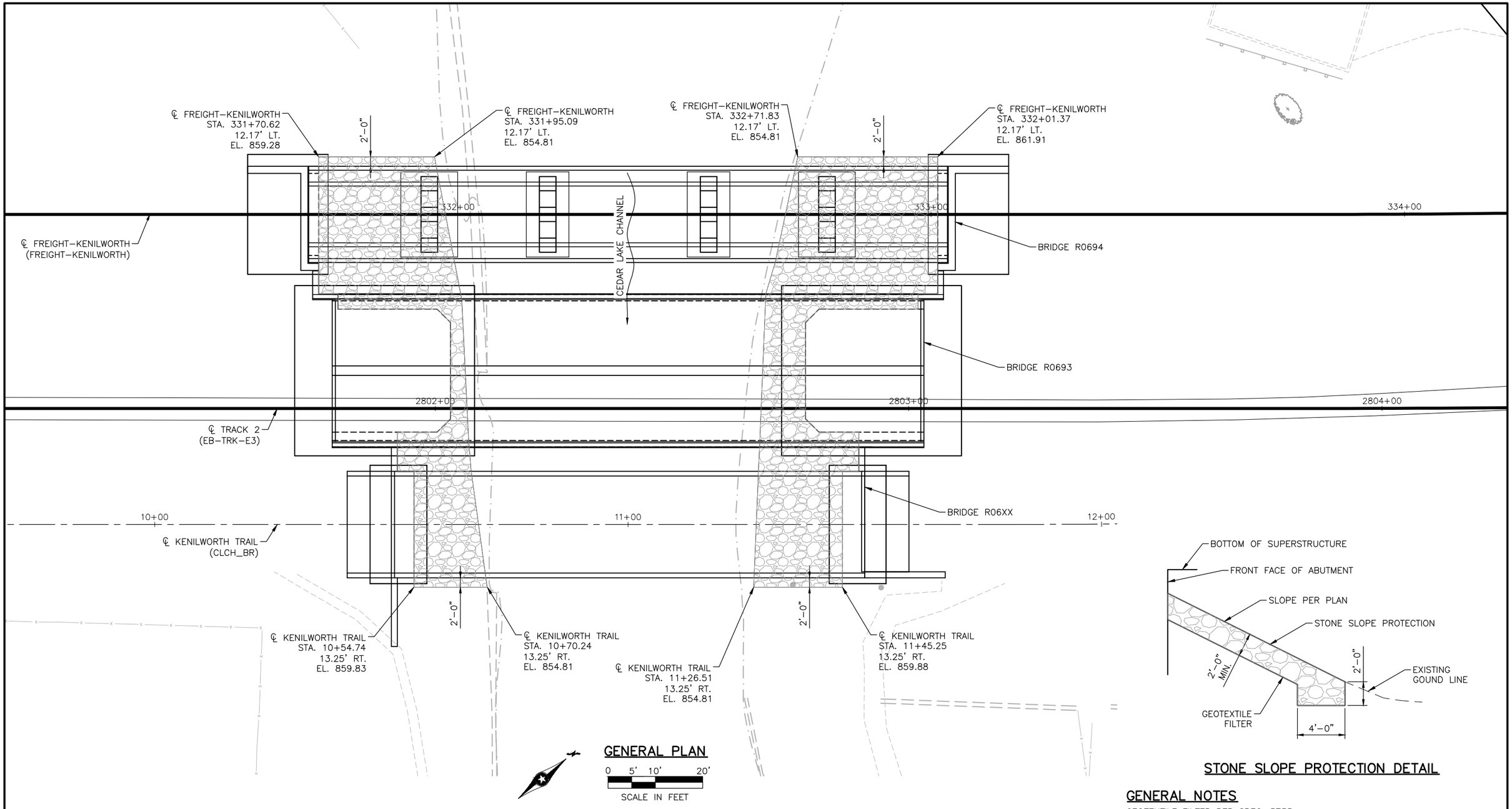

GENERAL PLAN

0 5' 10' 20'

SCALE IN FEET

STONE SLOPE PROTECTION DETAIL

GENERAL NOTES

GEOTEXTILE FILTER PER SPEC. 3733

STONE SLOPE PROTECTION SHALL BE IN ACCORDANCE WITH THE SPECIAL PROVISIONS.

NO.	DATE	BY	CHECK	DESIGN	REVISION / SUBMITTAL

DESIGNED BY: NRW | CHECKED BY: JSM
DRAWN BY: PGR | CHECKED BY: NRW

AECOM Kimley»Horn

90% SUBMISSION - 01/22/16

METROPOLITAN COUNCIL

SOUTHWEST Green Line LRT Extension

CIVIL - VOLUME 4F
CEDAR LAKE CHANNEL TRAIL BRIDGE
BRIDGE R06XX
STONE SLOPE PROTECTION DETAILS

DISCIPLINE: STRUCTURES

SHEET NAME: CBRR06XX-BRG-DTL-004

SHEET 30 OF 41

Jan, 16 2016 10:43 am V:\3400_ADC\CAD\SEGMENT E3\PLAN SHEETS\STRUCTURES\R06XX CLCH-TRL\CBRR06XX-BRG-SLO.dwg By: Nick.Williamson

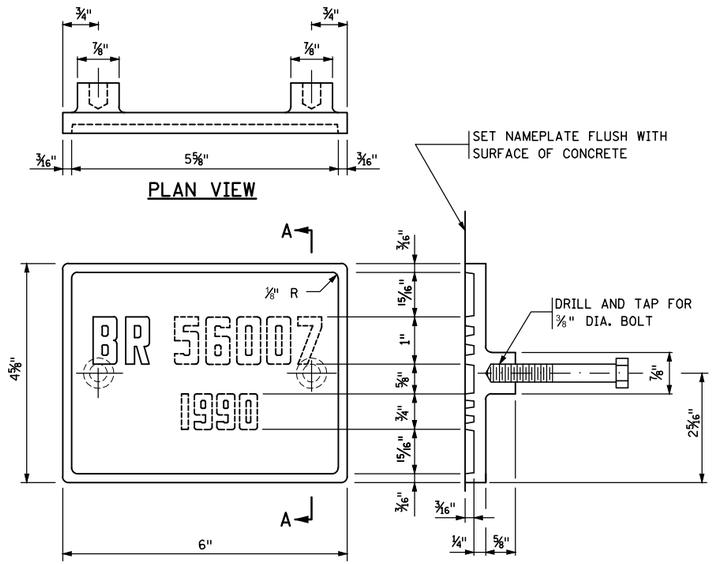

THE DASHED NUMBERS SHOWN ABOVE ARE FOR ILLUSTRATION.
DATA TO BE SHOWN ON NAMEPLATE IS AS FOLLOWS:

BRIDGE R06XX

YEAR ①



NUMBERS FOR NAMEPLATE

NOTES:

MATERIAL SHALL COMPLY WITH SPEC. 3327.

LETTERS AND NUMBERS SHALL CONFORM TO THOSE SHOWN.

DRAFT ON LETTERS AND NUMBERS SHALL NOT BE MORE THAN 3" IN 12".

HORIZONTAL SPACING OF LETTERS AND NUMBERS SHALL PRODUCE A BALANCED LAYOUT IN PROPORTION TO SPACING SHOWN.

TOP SURFACE OF LETTERS, NUMBERS AND FRAMES SHALL BE BURNISHED.

FURNISH 2 STEEL BOLTS ⅜" DIA. × 3" LONG WITH EACH PLATE.

ALL DIMENSIONS FOR 1" HIGH LETTERS AND NUMBERS SHALL BE IN DIRECT PROPORTION TO THOSE SHOWN FOR THE 1" HIGH LETTERS AND NUMBERS.

① YEAR OF CONSTRUCTION.

APPROVED: NOVEMBER 22, 2002	STATE OF MINNESOTA DEPARTMENT OF TRANSPORTATION	REVISION 09-11-2014	DETAIL NO.
Daniel J. Hegyan STATE BRIDGE ENGINEER	BRIDGE NAMEPLATE (FOR NEW BRIDGES)		B101

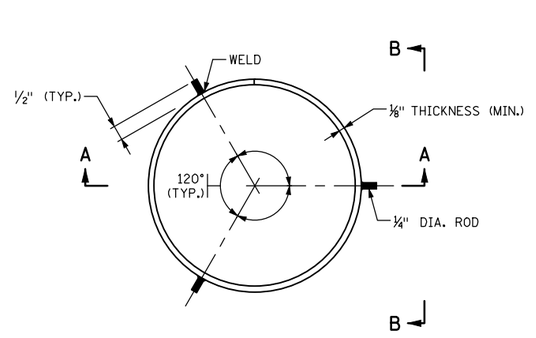

PLAN VIEW - SPLICE BACK-UP RING

PILE NOT SHOWN

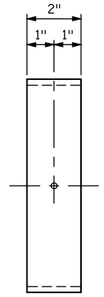

SECTION B-B

PILE NOT SHOWN

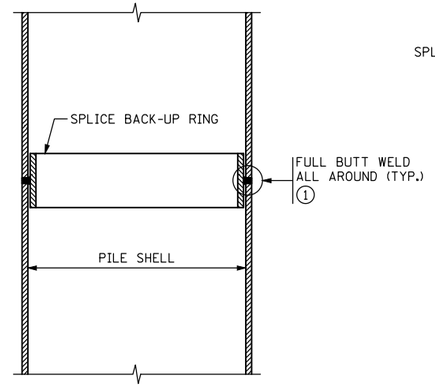

SECTION A-A

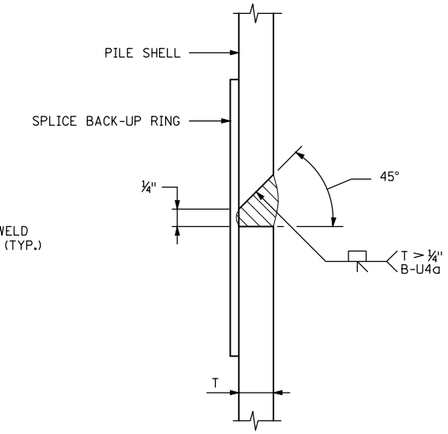

DETAIL "A" ①

NOTES:

APPROVED COMMERCIAL PILE SPLICE BACK-UP RING MAY BE USED IN LIEU OF THE TYPE DETAILED, PROVIDED THAT ." ROOT IS MAINTAINED. BACK-UP RING SHALL HAVE A TIGHT FIT.

WELDING ELECTRODES SHALL BE CELLULOSIC TYPE ELECTRODES E-6010 OR E-6011.

ELECTRODES WHICH HAVE BECOME WET, SOILED OR DAMAGED SHALL NOT BE USED.

WELDING SHALL NOT BE DONE WHEN THE AMBIENT TEMPERATURE IS LOWER THAN 0° F. OR WHEN THE PILE IS WET OR EXPOSED TO FALLING RAIN OR SNOW. WHEN THE PILE METAL TEMPERATURE IS BELOW 32° F., THE PILE METAL IN THE AREA OF THE WELD SHALL BE HEATED TO A MINIMUM TEMPERATURE OF 70° F. AND MAINTAINED AT THIS TEMPERATURE DURING WELDING.

① FOR PILE SHELL THICKNESSES GREATER THAN ¼", USE A B-U4a WELD CONFIGURATION. SEE DETAIL "A".

APPROVED: NOVEMBER 22, 2002	STATE OF MINNESOTA DEPARTMENT OF TRANSPORTATION	REVISION: 11-06-2013	DETAIL NO.
Daniel J. Hegyan STATE BRIDGE ENGINEER	PILE SPLICE (CAST-IN-PLACE CONCRETE PILES)		B201

NO.	DATE	BY	CHECK	DESIGN	REVISION / SUBMITTAL

DESIGNED BY: NRW CHECKED BY: JSM

DRAWN BY: PGR CHECKED BY: NRW

AECOM Kimley»Horn

90% SUBMISSION - 01/22/16

METROPOLITAN COUNCIL

SOUTHWEST Green Line LRT Extension

CIVIL - VOLUME 4F
CEDAR LAKE CHANNEL TRAIL BRIDGE
BRIDGE R06XX
BRIDGE DETAILS 1

DISCIPLINE: STRUCTURES

SHEET NAME: CBRR06XX-BRG-DTL-005

SHEET 31 OF 41

Jan, 16 2016 10:44 am V:\3400_ADC\CAD\SEGMENT E3\PLAN SHEETS\STRUCTURES\R06XX CLCH-TRL\CBRR06XX-BRG-DTL1.dwg By: Nick.Williamson

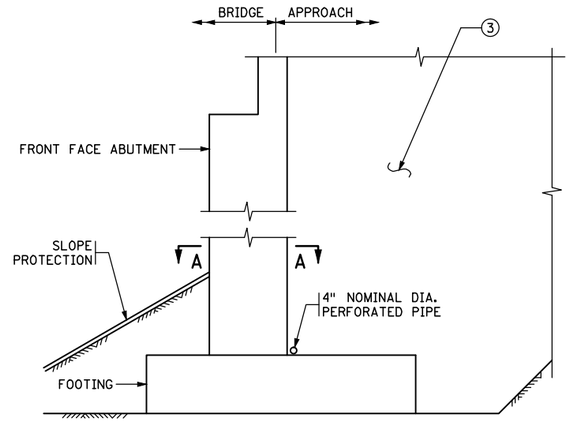

SECTION THROUGH PARAPET AND SEMI-INTEGRAL ABUTMENTS

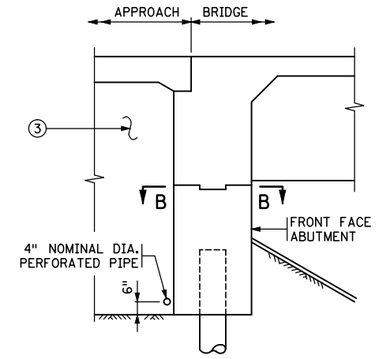

SECTION THROUGH INTEGRAL ABUTMENT

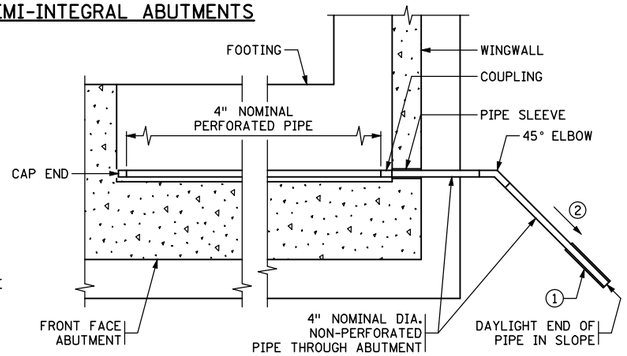

SECTION A-A

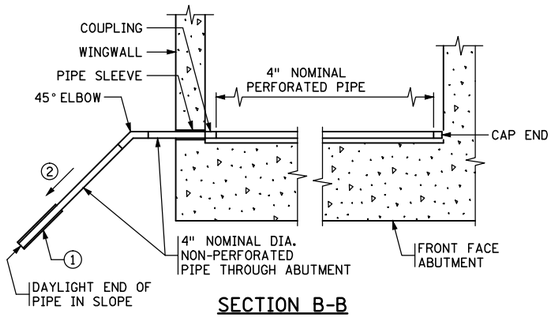

SECTION B-B

NOTES:

~~PAYMENT WILL BE INCLUDED IN THE SINGLE LUMP SUM PRICE FOR "DRAINAGE SYSTEM TYPE (B910)", INCLUDES BUT IS NOT LIMITED TO 4" DIAMETER PERFORATED AND NON PERFORATED PIPE, ELBOWS, END CAPS, COUPLINGS, SLEEVES AND PRECAST CONCRETE HEADWALLS.~~

ALL PIPE TO COMPLY WITH SPEC. 3245.

WRAP PERFORATED PIPE WITH GEOTEXTILE PER SPEC. 3733, TYPE 1. ATTACH TO PIPE PER SPEC. 2502.

1. AT CONTRACTORS OPTION, MAY TIE APPROACH PANEL DRAINAGE SYSTEM AND ABUTMENT DRAINAGE SYSTEM INTO A SINGLE PRECAST CONCRETE HEADWALL OR INTO A CATCH BASIN AS LONG AS A MINIMUM OF 1% POSITIVE SLOPE CAN BE MANTAINED.

   USE PRECAST CONCRETE HEADWALL WITH RODENT SCREEN. SEE STANDARD PLATE 3131 FOR DETAILS.

2. ⅛" PER FT. MINIMUM SLOPE.

3. REFER TO GRADING PLANS FOR ABUTMENT BACKFILL REQUIREMENTS.

APPROVED: JANUARY 13, 2015	STATE OF MINNESOTA DEPARTMENT OF TRANSPORTATION	REVISED	DETAIL NO.
Nancy Daubenberger STATE BRIDGE ENGINEER	DRAINAGE SYSTEM		B910

NO.	DATE	BY	CHECK	DESIGN	REVISION / SUBMITTAL

DESIGNED BY: NRW | CHECKED BY: JSM
DRAWN BY: PGR | CHECKED BY: NRW

AECOM Kimley»Horn

90% SUBMISSION - 01/22/16

METROPOLITAN COUNCIL

SOUTHWEST Green Line LRT Extension

CIVIL - VOLUME 4F
CEDAR LAKE CHANNEL TRAIL BRIDGE
BRIDGE R06XX
BRIDGE DETAILS 2

DISCIPLINE: STRUCTURES

SHEET NAME: CBRR06XX-BRG-DTL-006

SHEET 32 OF 41

Jan, 16 2016 10:44 am v:\3400_ADC\CAD\SEGMENT E3\PLAN SHEETS\STRUCTURES\R06XX CLCH-TRL\CBRR06XX-BRG-DTL1.dwg By: Nick.Williamson

CONCRETE WEARING COURSE

☐ LOW SLUMP

☐ OTHER _____
TYPE OR MANUFACTURER

EXPANSION JOINTS

JOINT MANUFACTURER

MANUFACTURER'S IDENTIFICATION _____
MFR'S No. AND/OR LETTER DESIGNATION FOR JOINT USED

GLAND MANUFACTURER _____
NAME AND ADDRESS (CITY, STATE)

SIZE OF GLAND _____

MANUFACTURER'S IDENTIFICATION _____
MFR'S No. AND/OR LETTER DESIGNATION FOR GLAND USED

ELASTOMERIC BEARING PADS

PAD MANUFACTURER _____
NAME AND ADDRESS (CITY, STATE)

SPECIAL SURFACE FINISH

SYSTEM: _____ COLOR: _____

FINISHING ROADWAY FACES OF BARRIER RAILING

TYPE: _____ COLOR: _____

ANTI-GRAFFITI COATING

MANUFACTURER _____
NAME AND ADDRESS (CITY, STATE)

PRODUCT NAME: _____ LOCATION: _____

PAINT SYSTEM

Mn/DOT SPECIFICATION NUMBER _____
2478 OR 2479 OR OTHER

MANUFACTURER _____
NAME AND ADDRESS (CITY, STATE)

PRIME COAT _____
Mn/DOT MATERIAL SPECIFICATION NUMBER

INTERMEDIATE COAT _____
Mn/DOT MATERIAL SPECIFICATION NUMBER

FINISH COAT _____ _____
Mn/DOT MATERIAL SPECIFICATION NUMBER COLOR

PLAN QUALITY

RATE 1 (AGREE), 2 (NEUTRAL), OR 3 (DISAGREE, PLEASE COMMENT BELOW)

DIMENSIONING AND DETAILING ADEQUATELY DESCRIBED REQUIRED CONSTRUCTION. _____
BAR LISTS AND QUANTITIES WERE TYPICALLY COMPLETE AND FREE OF ERRORS. _____
SCALE OF DRAWINGS AND OVERALL LEGIBILITY OF LINES AND TEXT WAS GOOD. _____
(SB) SPECIAL PROVISIONS ADEQUATELY DESCRIBED SPECIAL WORK AND PAYMENT. _____

COMMENTS: _____

NUMBER OF BRIDGE
SUPPLEMENTAL AGREEMENTS: _____ COST: $ _____

LIST SIGNIFICANT ERRORS OR OMISSIONS IN PLAN DETAILS OR PAY QUANTITIES IN THE SPACE PROVIDED AT RIGHT.

BRIDGE REMOVAL / BRIDGE OPENING

NUMBER OF AND DATE OLD BRIDGE WAS REMOVED (IF APPLICABLE):

BRIDGE NUMBER _____ DATE REMOVED _____

DATE NEW BRIDGE WAS OPENED TO TRAFFIC _____

NOTIFY THE BRIDGE OFFICE BRIDGE MANAGEMENT UNIT WITH THIS INFORMATION AS SOON AS POSSIBLE. (651) 366-4557

AS-BUILT DETAILS
(AS NEEDED)

OTHER ITEMS ①

① UTILITIES ADDED DURING CONSTRUCTION AND SPECIALTY ITEMS.

FINAL QUANTITIES ENTERED ON SCHEDULE OF QUANTITIES: YES ☐ NO ☐

SUMMARY OF SIGNIFICANT AS-BUILT CHANGES

THE AS-BUILT INFORMATION WAS ADDED TO THE PLAN BY:

_____ _____
INSPECTOR(S) SIGNATURE DATE

CHECKED BY: _____ _____
PROJECT ENGINEER/SUPERVISOR SIGNATURE DATE

AT THE TIME OF THE FINAL, THIS COMPLETED AS-BUILT BRIDGE DATA SHEET MUST BE SUBMITTED TO THE BRIDGE OFFICE - ATTN: REGIONAL CONSTRUCTION ENGINEER (MS610).

REVISION:

APPROVED: NOVEMBER 6, 2013
Nancy Daubenberger
STATE BRIDGE ENGINEER

CERTIFIED BY _____ 7/13/15
LICENSED PROFESSIONAL ENGINEER DATE
NAME: ENGINEER LIC. NO. #####

TITLE: AS-BUILT BRIDGE DATA

DES:	DR:	APPROVED:
CHK:	CHK:	

SHEET NO. 33 OF 41 SHEETS

FIG. 5-397.900

BRIDGE NO. R06XX

Jan. 16 2016 10:44 am V:\3400_ADC\CAD\SEGMENT E3\PLAN SHEETS\STRUCTURES\R06XX CLCH-TRL\CBRR06XX-BRG-DTL3.dwg By: Nick.Williamson

CONTRACTED PROFILE

SCALE HOR: 0 50'

SCALE VER: 0 10'

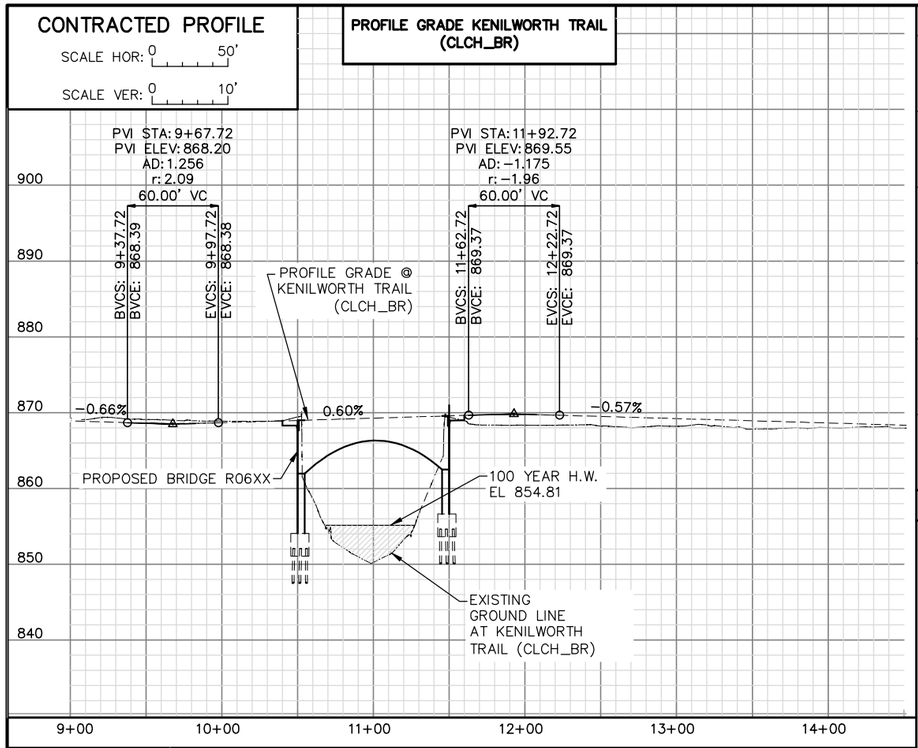

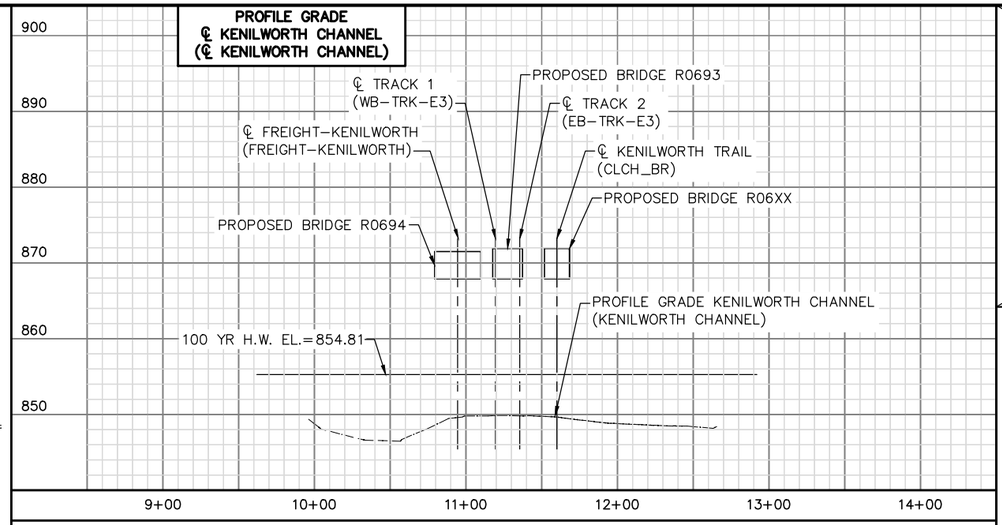

PLAT

SCALE: 0 50'

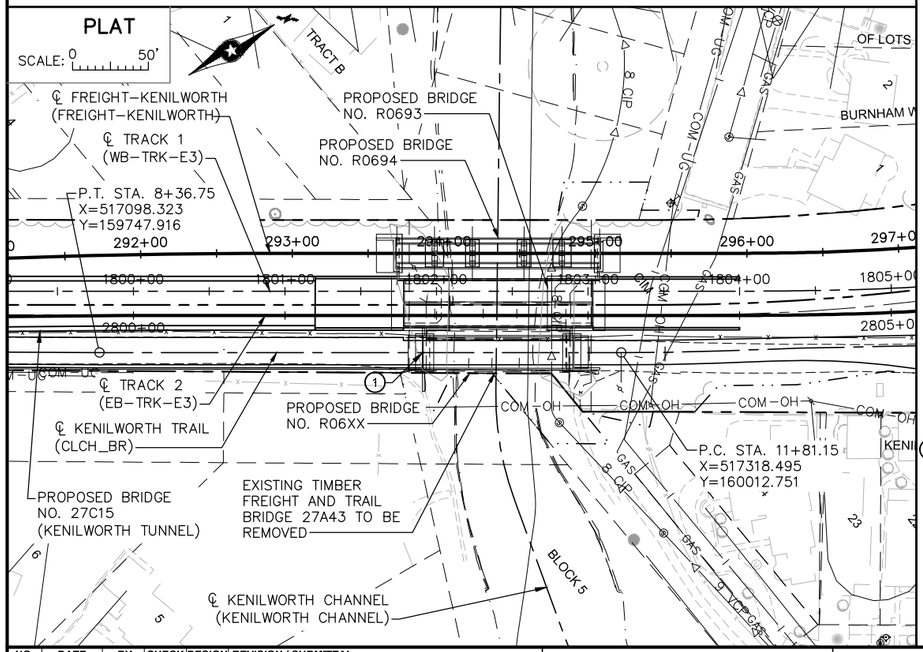

NOTES:

IN PLACE EXISTING TIMBER FREIGHT AND TRAIL BRIDGE 27A43 TO BE REMOVED.

THE SUBSURFACE UTILITY INFORMATION IN THIS PLAN IS UTILITY QUALITY LEVEL D. THIS UTILITY QUALITY LEVEL WAS DETERMINED ACCORDING TO GUIDELINES OF CI/ASCE 38−02, ENTITLED "STANDARD GUIDELINES FOR THE COLLECTION AND DEPICTION OF EXISTING SUBSURFACE UTILITY DATA."

(1) CONTROL POINT 1
℄ KENILWORTH (CLCH_BR) TRAIL
STA. 10+50.00
X = 517234.649
Y = 159911.897

INDEX MAP

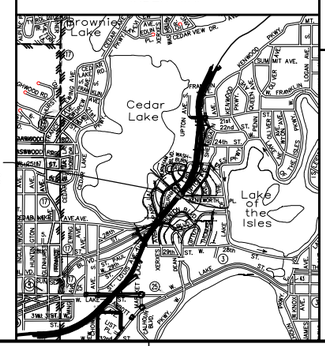

LOCATION ENGINEER'S OBSERVATIONS AT BRIDGE SITE

1. SPECIAL FEATURES: WATERFALLS, DAMS, FLOODS, ICE, DEBRIS SLIDING BANKS, RECREATIONAL BOATING.
2. OTHER BRIDGES OR CULVERTS OVER THE SAME STREAM (PARTICULARY STRUCTURES WHICH CARRY HIGH WATER WITHOUT OVERFLOW OF ROADWAY): GIVEN LOCATION, TYPE, LENGTH, HEIGHT ABOVE HIGH WATER, CROSS−SECTIONAL AREA ETC.
3. APPARENT HIGHWATER ELEVATION OBTAINED FROM:
4. OTHER DATA: APPROX. VELOCITY OF WATER AT TIME OF SURVEY.

HYDRAULIC ENGINEER'S RECOMMENDATION

DATE: 1/22/2016

STREAM OR DITCH DESIGNATION CEDAR LAKE CHANNEL

DRAINAGE AREA 9.4 SQ. MI.

MAX FLOOD ON RECORD 855.43 FT (JULY 1997)

DESIGN FLOOD (100YR. FREQ.): 194.64 C.F.S.
HEADWATER ELEVATION: FT. 854.81
DESIGN MEAN VELOCITY THROUGH STRUCTURE 2.5 F.P.S.
TOTAL STAGE INCREASE 0.0 FT.
LOW MEMBER AT OR ABOVE ELEVATION 854.58 FT.

WATERWAY AREA REQUIRED BELOW ELEV. 854.81 = 163.62 S.F. AT RIGHT ANGLES TO CHANNEL

BASIC FLOOD (100 YR. FREQ.) 194.64 C.F.S.
HEADWATER ELEVATION: 854.81 F.T.
TOTAL STAGE INCREASE 0.0 FT.
MEAN VELOCITY THROUGH STRUCTURE 2.5 F.P.S.

FLOWLINE ELEVATION: TBD SKEW ANGLE: 0 DEG

ESTIMATED PRLIMINARY TOTAL SCOUR AT PIER EL. N/A (500 YR. FREQ.)

SCOUR CONFIRMATION RECOMMENDATION

DATE: 1/22/2016

TOTAL SCOUR AT PIER EL. N/A (500 YR. FREQ.)
SCOUR CODE: L − STABLE − EVAL

BRIDGE SURVEY SHEETS MADE FROM 2014 MFRA SURVEYS

1ST BENCH MARK (NAVD 88)
BENCHMARK ID PT. 183
ELEVATION = 869.09
N = 159916.74, E = 517227.56
DESCRIPTION = MAG NAIL IN BIT. PATH

2ND BENCH MARK (NAVD 88)
BENCHMARK ID PT. 184
ELEVATION = 867.99
N = 160069.02, E = 517359.05
DESCRIPTION = MAG NAIL IN BIT. PATH

BRIDGE SURVEY 1

KENILWORTH TRAIL OVER CEDAR LAKE CHANNEL BETWEEN LAKE OF THE ISLES AND CEDAR LAKE IN MINNEAPOLIS

SEC 32 T 29N R 24W

CITY OF MINNEAPOLIS HENNEPIN COUNTY

BRIDGE NO. R06XX

NO.	DATE	BY	CHECK	DESIGN	REVISION / SUBMITTAL

AECOM Kimley»Horn

DESIGNED BY: NRW CHECKED BY: JSM
DRAWN BY: PGR CHECKED BY: NRW

90% SUBMISSION - 01/22/16

METROPOLITAN COUNCIL

SOUTHWEST Green Line LRT Extension

CIVIL - VOLUME 4F
CEDAR LAKE CHANNEL TRAIL BRIDGE
BRIDGE R06XX
BRIDGE SURVEY 1

DISCIPLINE: STRUCTURES

SHEET NAME: CBRR06XX-BRG-SUR-001

SHEET 34 OF 41

Jan, 16 2016 10:50 am v:\3400_ADC\CAD\SEGMENT E3\PLAN SHEETS\STRUCTURES\R06XX CLCH−TRL\CBRR06XX−BRG−SUR−001.dwg By: Nick.Williamson

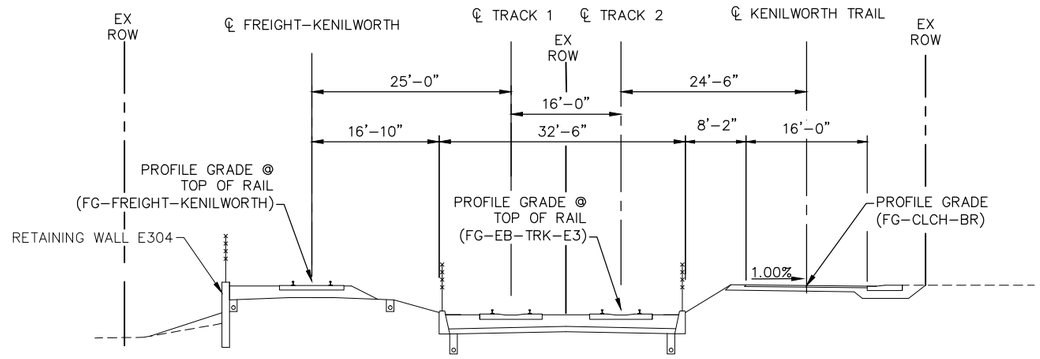

TYPICAL APPROACH SECTION AT BEGIN BRIDGE

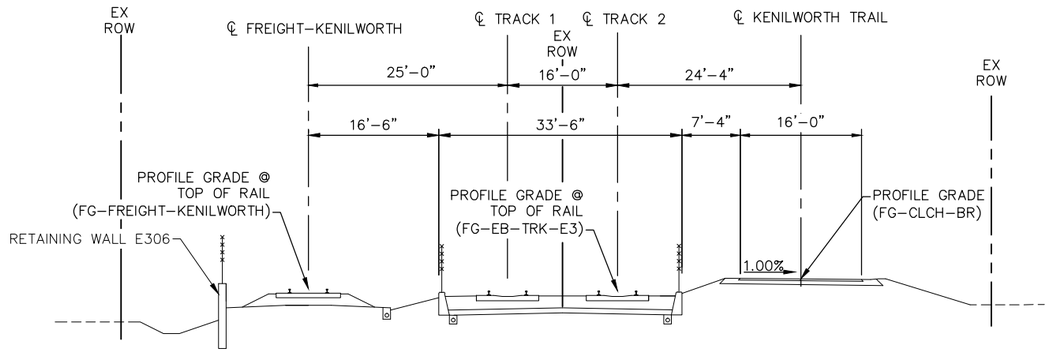

TYPICAL APPROACH SECTION AT END BRIDGE

NO.	DATE	BY	CHECK	DESIGN	REVISION / SUBMITTAL

DESIGNED BY: NRW | CHECKED BY: JSM
DRAWN BY: PGR | CHECKED BY: NRW

AECOM Kimley»Horn

90% SUBMISSION - 01/22/16

METROPOLITAN COUNCIL

SOUTHWEST Green Line LRT Extension

CIVIL - VOLUME 4F
CEDAR LAKE CHANNEL TRAIL BRIDGE
BRIDGE R06XX
BRIDGE SURVEY 2

DISCIPLINE: STRUCTURES
SHEET NAME: CBRR06XX-BRG-SUR-002

SHEET 35 OF 41

Jan, 16 2016 10:50 am v:\3400_ADC\CAD\SEGMENT E3\PLAN SHEETS\STRUCTURES\R06XX CLCH-TRL\CBRR06XX-BRG-SUR-002.dwg By: Nick.Williamson

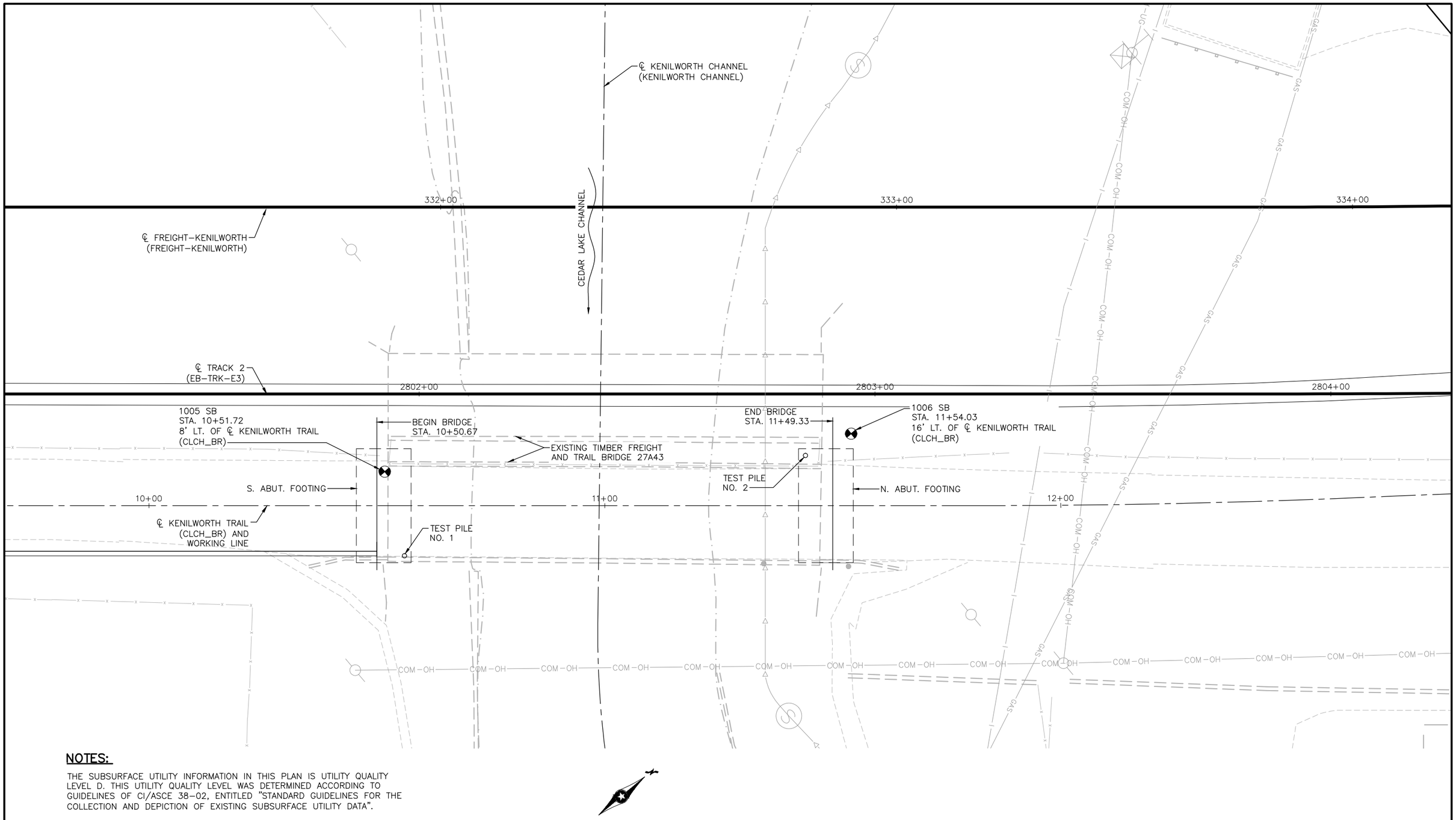

NOTES:

THE SUBSURFACE UTILITY INFORMATION IN THIS PLAN IS UTILITY QUALITY LEVEL D. THIS UTILITY QUALITY LEVEL WAS DETERMINED ACCORDING TO GUIDELINES OF CI/ASCE 38–02, ENTITLED "STANDARD GUIDELINES FOR THE COLLECTION AND DEPICTION OF EXISTING SUBSURFACE UTILITY DATA".

NO.	DATE	BY	CHECK	DESIGN	REVISION / SUBMITTAL

DESIGNED BY: NRW | CHECKED BY: JSM
DRAWN BY: PGR | CHECKED BY: NRW

AECOM Kimley»Horn

90% SUBMISSION - 01/22/16

METROPOLITAN COUNCIL

SOUTHWEST Green Line LRT Extension

CIVIL - VOLUME 4F
CEDAR LAKE CHANNEL TRAIL BRIDGE
BRIDGE R06XX
BRIDGE SURVEY PLAN

DISCIPLINE: STRUCTURES

SHEET NAME: CBRR06XX-BRG-BOR-001

SHEET 36 OF 41

Jan, 16 2016 10:53 am V:\3400_ADC\CAD\SEGMENT E3\PLAN SHEETS\STRUCTURES\R06XX CLCH-TRL\CBRR06XX-BRG-BOR-001.dwg By: Nick.Williamson

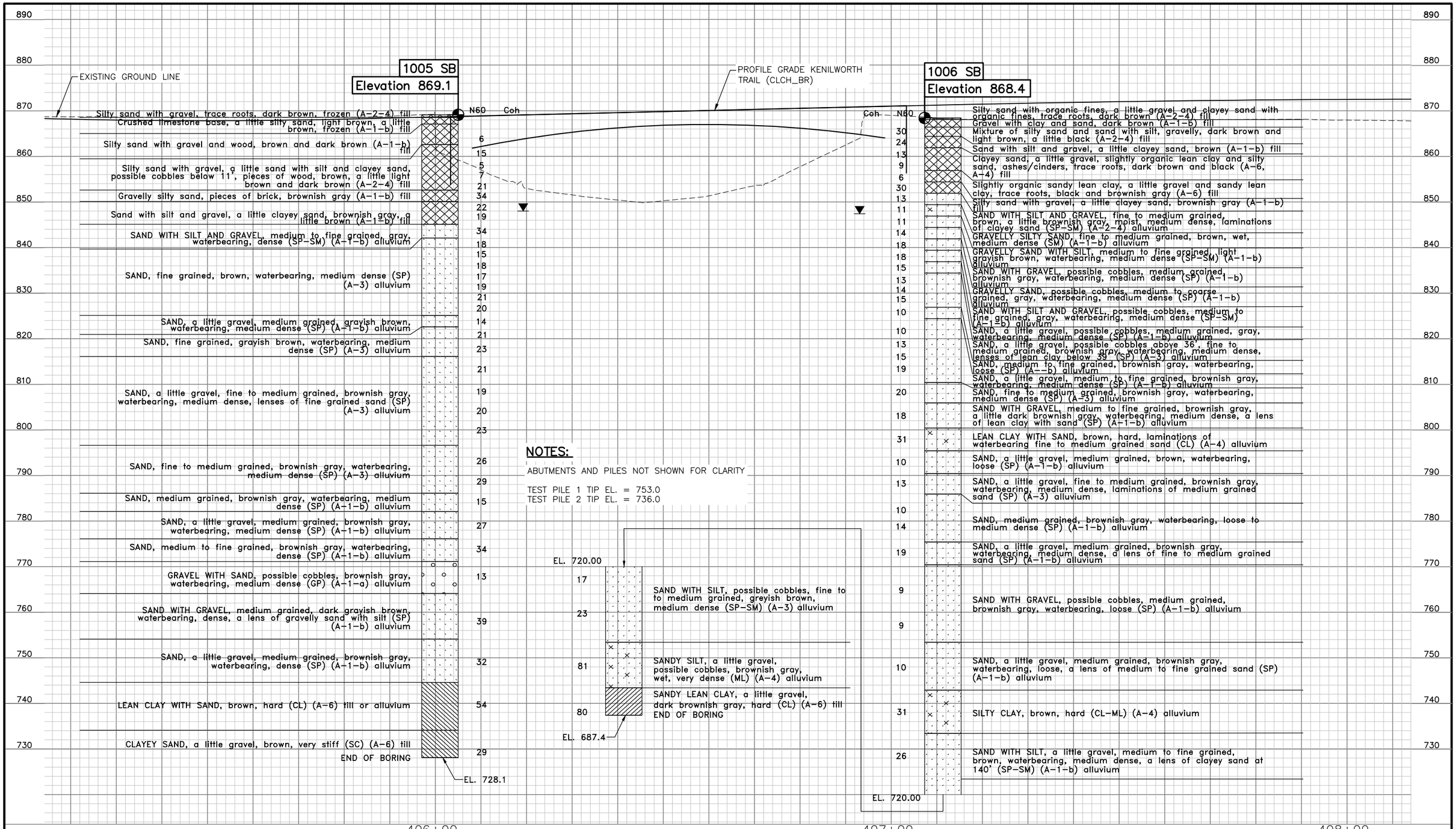

Jan. 16 2016 10:54 am V:\3400_ADC\CAD\SEGMENT E3\PLAN SHEETS\STRUCTURES\R06XX CLCH-TRL\CBRR06XX-BRG-BOR-002.dwg By: Nick.Williamson

NO.	DATE	BY	CHECK	DESIGN	REVISION / SUBMITTAL

DESIGNED BY: NRW | CHECKED BY: JSM
DRAWN BY: PGR | CHECKED BY: NRW

AECOM Kimley»Horn

90% SUBMISSION - 01/22/16

METROPOLITAN COUNCIL

SOUTHWEST Green Line LRT Extension

CIVIL - VOLUME 4F
CEDAR LAKE CHANNEL TRAIL BRIDGE
BRIDGE R06XX
BRIDGE SURVEY PROFILE

DISCIPLINE: STRUCTURES

SHEET NAME: CBRR06XX-BRG-BOR-002

SHEET 37 OF 41

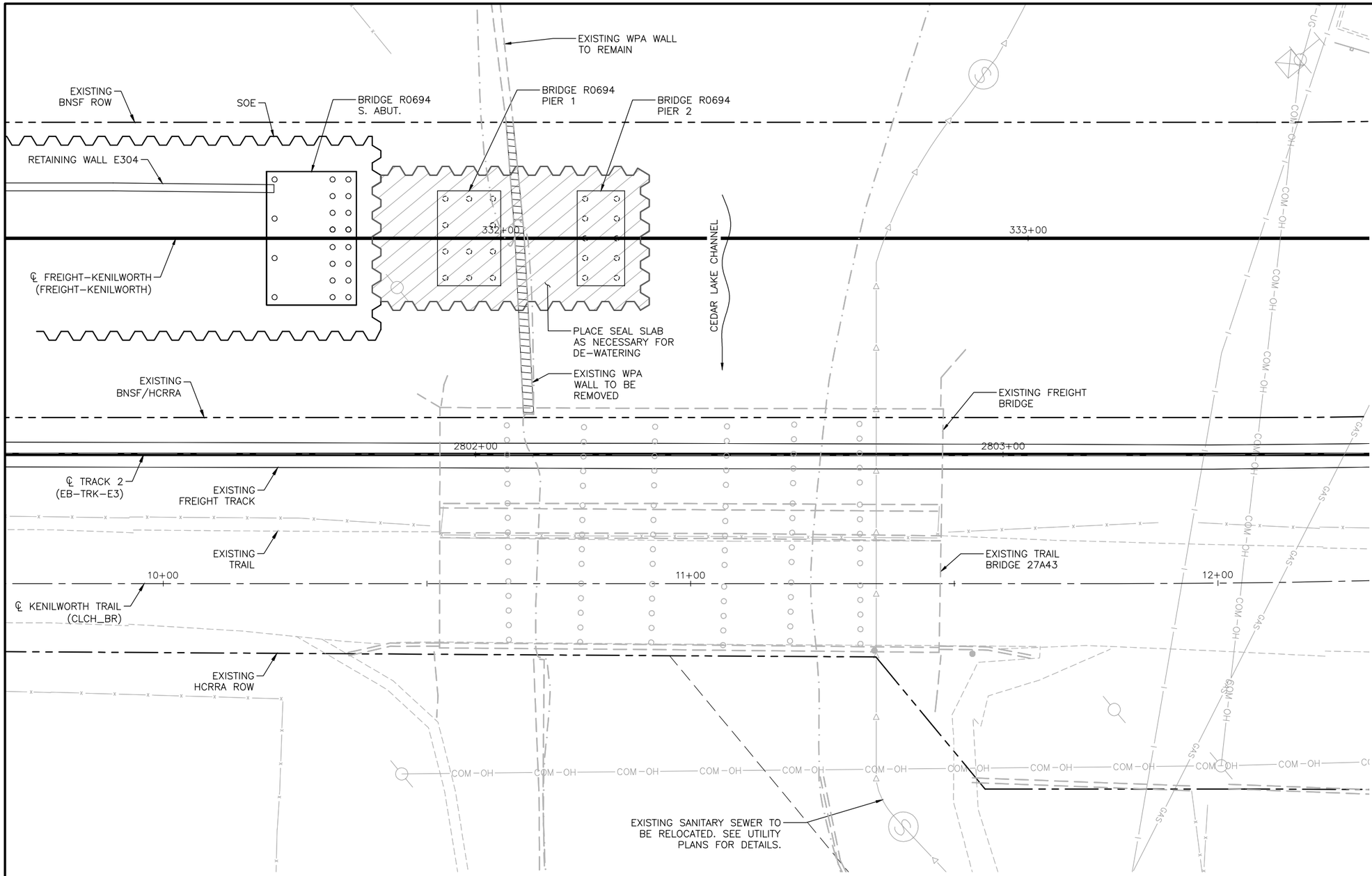

STAGING REQUIREMENTS:

ALL TRACKS SHALL BE KEPT OPEN FOR TRAIN USE DURING CONSTRUCTION EXCEPT WITH PRIOR APPROVAL.

A 25' WIDE HORIZONTAL CLEARANCE SHALL BE MAINTAINED IN THE CHANNEL EXCEPT AS NOTED OTHERWISE.

WITHIN THE 25' WIDE HORIZONTAL CLEARANCE, NO CONSTRUCTION MATERIAL (INCLUDING FORMWORK) MAY EXTEND BELOW ELEVATION 863.03 EXCEPT AS NOTED OTHERWISE.

DURING CONSTRUCTION VIBRATIONS AT ADJACENT PROPERTIES SHALL BE MONITORED AND LIMITED.

STAGING NOTES:

MAINTAIN EXISTING FREIGHT AND TRAIL TRAFFIC ON BRIDGE 27A43.

SURVEY AND REMOVE EXISTING WPA WALL AS REQUIRED.

INSTALL SOE AS SHOWN FOR CONSTRUCTION OF SOUTH PORTION OF BRIDGE R0694.

EXCAVATE AS NECESSARY TO CONSTRUCT RETAINING WALL E304 AND SOUTH PORTION OF BRIDGE R0694.

CONSTRUCT RETAINING WALL E304 AND SOUTH PORTION OF BRIDGE R0694.

BACKFILL STRUCTURE. REMOVE SOE.

PERFORM UTILITY WORK ON SANITARY SEWER AND WATER MAIN PER THE UTILITY PLAN.

PROPOSED CONSTRUCTION SEQUENCE
STAGE 1

NO.	DATE	BY	CHECK	DESIGN	REVISION / SUBMITTAL

DESIGNED BY: NRW | CHECKED BY: JSM
DRAWN BY: BAC | CHECKED BY: NRW

AECOM Kimley»Horn

90% SUBMISSION - 01/22/16

METROPOLITAN COUNCIL

SOUTHWEST Green Line LRT Extension

CIVIL - VOLUME 4F
CEDAR LAKE CHANNEL TRAIL BRIDGE
BRIDGE R06XX
STAGING PLAN 1

DISCIPLINE: STRUCTURES
SHEET NAME: CBRR06XX-BRG-STG-001

SHEET 38 OF 41

Jan, 16 2016 10:57 am V:\3400_ADC\CAD\SEGMENT E3\PLAN SHEETS\STRUCTURES\R06XX CLCH-TRL\CBRR06XX-BRG-STG-001.dwg By: Nick.Williamson

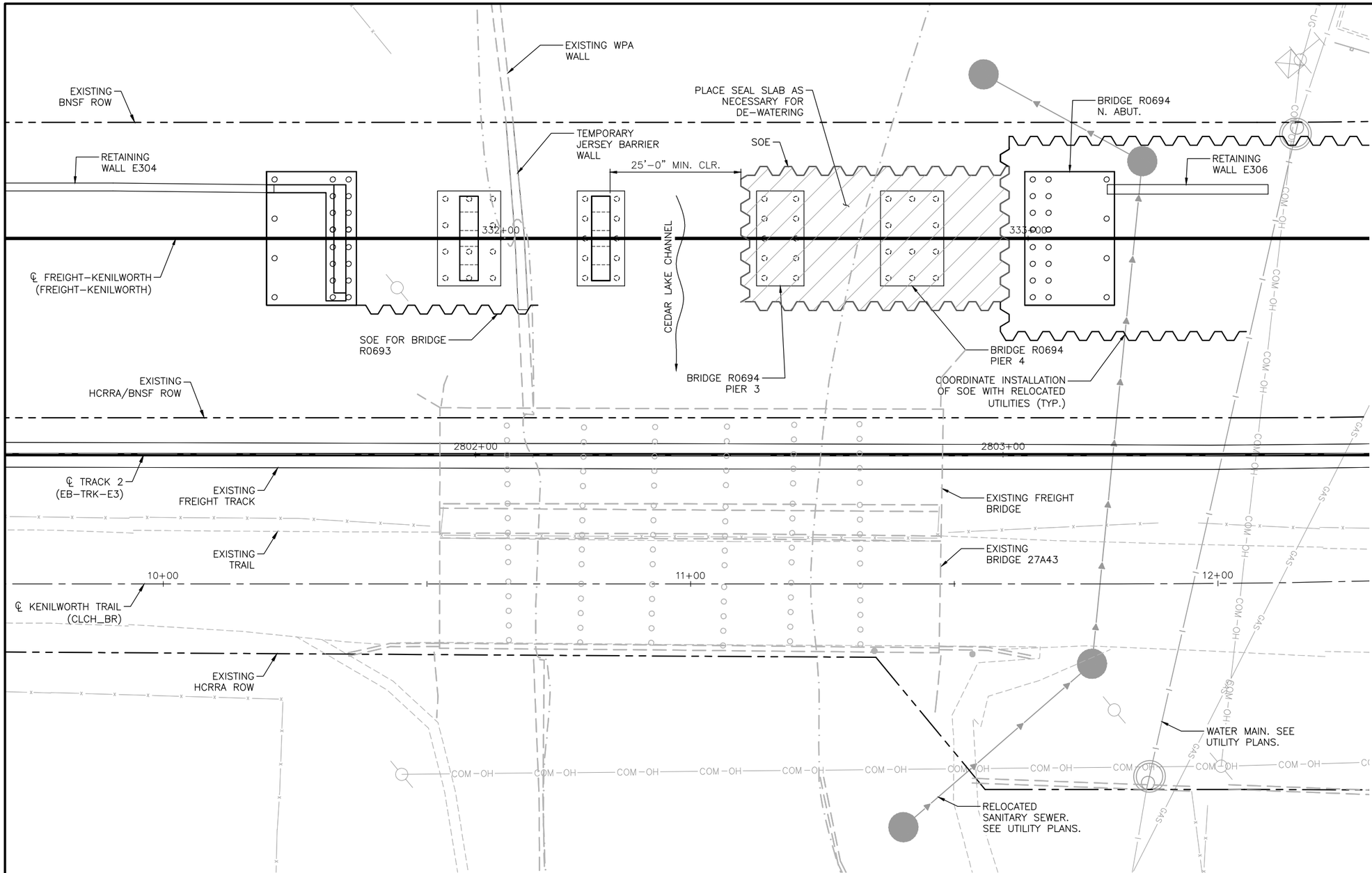

PROPOSED CONSTRUCTION SEQUENCE
STAGE 2

STAGING REQUIREMENTS:

ALL TRACKS SHALL BE KEPT OPEN FOR TRAIN USE DURING CONSTRUCTION EXCEPT WITH PRIOR APPROVAL.

A 25' WIDE HORIZONTAL CLEARANCE SHALL BE MAINTAINED IN THE CHANNEL EXCEPT AS NOTED OTHERWISE.

WITHIN THE 25' WIDE HORIZONTAL CLEARANCE, NO CONSTRUCTION MATERIAL (INCLUDING FORMWORK) MAY EXTEND BELOW ELEVATION 863.03 EXCEPT AS NOTED OTHERWISE.

DURING CONSTRUCTION VIBRATIONS AT ADJACENT PROPERTIES SHALL BE MONITORED AND LIMITED.

STAGING NOTES:

MAINTAIN EXISTING FREIGHT AND TRAIL TRAFFIC ON BRIDGE 27A43.

INSTALL SOE AS SHOWN FOR BRIDGE R0693 SOUTH ABUTMENT.

PLACE JERSEY BARRIER AT LOCATION OF WPA WALL FOR TEMPORARY RETAINMENT

INSTALL SOE FOR CONSTRUCTION OF NORTH PORTION OF BRIDGE R0694.

EXCAVATE AS NECESSARY TO CONSTRUCT RETAINING WALL E306 AND NORTH PORTION OF BRIDGE R0694.

CONSTRUCT RETAINING WALL E304 AND SOUTH PORTION OF BRIDGE R0694.

BACKFILL STRUCTURE. REMOVE SOE.

CONSTRUCT R0694 SUPERSTRUCTURE, BALLAST, AND RAIL. MOVE FREIGHT TRAFFIC TO BRIDGE R0694.

NO.	DATE	BY	CHECK	DESIGN	REVISION / SUBMITTAL

DESIGNED BY: NRW | CHECKED BY: JSM
DRAWN BY: BAC | CHECKED BY: NRW

AECOM Kimley»Horn

90% SUBMISSION - 01/22/16

METROPOLITAN COUNCIL

SOUTHWEST Green Line LRT Extension

CIVIL - VOLUME 4F
CEDAR LAKE CHANNEL TRAIL BRIDGE
BRIDGE R06XX
STAGING PLAN 2

DISCIPLINE: STRUCTURES
SHEET NAME: CBRR06XX-BRG-STG-002

SHEET 39 OF 41

Jan, 16 2016 11:00 am V:\3400_ADC\CAD\SEGMENT E3\PLAN SHEETS\STRUCTURES\R06XX CLCH-TRL\CBRR06XX-BRG-STG-002.dwg By: Nick.Williamson

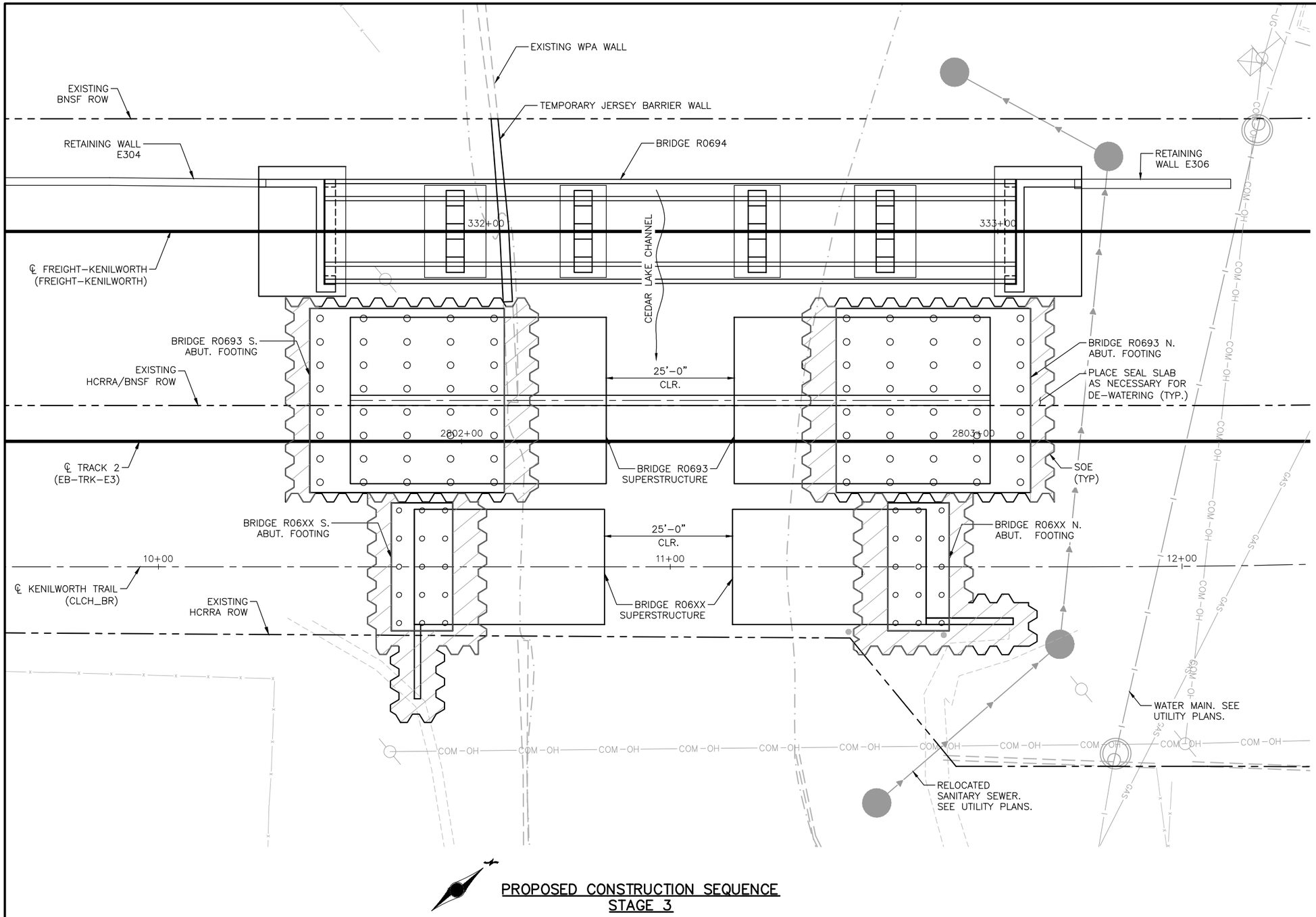

PROPOSED CONSTRUCTION SEQUENCE
STAGE 3

STAGING REQUIREMENTS:

ALL TRACKS SHALL BE KEPT OPEN FOR TRAIN USE DURING CONSTRUCTION EXCEPT WITH PRIOR APPROVAL.

A 25' WIDE HORIZONTAL CLEARANCE SHALL BE MAINTAINED IN THE CHANNEL EXCEPT AS NOTED OTHERWISE.

WITHIN THE 25' WIDE HORIZONTAL CLEARANCE, NO CONSTRUCTION MATERIAL (INCLUDING FORMWORK) MAY EXTEND BELOW ELEVATION 863.03 EXCEPT AS NOTED OTHERWISE.

DURING CONSTRUCTION VIBRATIONS AT ADJACENT PROPERTIES SHALL BE MONITORED AND LIMITED.

STAGING NOTES:

DETOUR TRAIL TRAFFIC. CONSTRUCT BRIDGE 27C15 (KENILWORTH TUNNEL)

REMOVE EXISTING FREIGHT TRACK, TRAIL, AND BRIDGE 27A43.

INSTALL SOE FOR CONSTRUCTION OF BRIDGES R0693 AND R06XX ABUTMENTS.

EXCAVATE AS NECESSARY TO CONSTRUCT BRIDGES R0693 AND R06XX ABUTMENTS.

CONSTRUCT BRIDGES R0693 AND R06XX ABUTMENTS WITH TEMPORARY STABILITY BRACKETS. (SEE ABUTMENT DETAILS).

REMOVE SOE AT FRONT FACE OF ABUTMENT. DO NOT BACKFILL BEHIND ABUTMENT..

INSTALL FALSEWORK IN CHANNEL TO SUPPORT SUPERSTRUCTURE END POURS.

CONSTRUCT SUPERSTRUCTURE END POURS FOR BRIDGES R0693 AND R06XX. FALSEWORK SHALL NOT BE REMOVED UNTIL CLOSURE POUR IS COMPLETE.

NO.	DATE	BY	CHECK	DESIGN	REVISION / SUBMITTAL

DESIGNED BY: NRW | CHECKED BY: JSM
DRAWN BY: BAC | CHECKED BY: NRW

AECOM Kimley»Horn

90% SUBMISSION - 01/22/16

METROPOLITAN COUNCIL

SOUTHWEST Green Line LRT Extension

CIVIL - VOLUME 4F
CEDAR LAKE CHANNEL TRAIL BRIDGE
BRIDGE R06XX
STAGING PLAN 3

DISCIPLINE: STRUCTURES
SHEET NAME: CBRR06XX-BRG-STG-003

SHEET 40 OF 41

Jan, 16 2016 11:02 am V:\3400_ADC\CAD\SEGMENT E3\PLAN SHEETS\STRUCTURES\R06XX CLCH–TRL\CBRR06XX–BRG–STG–003.dwg By: Nick.Williamson

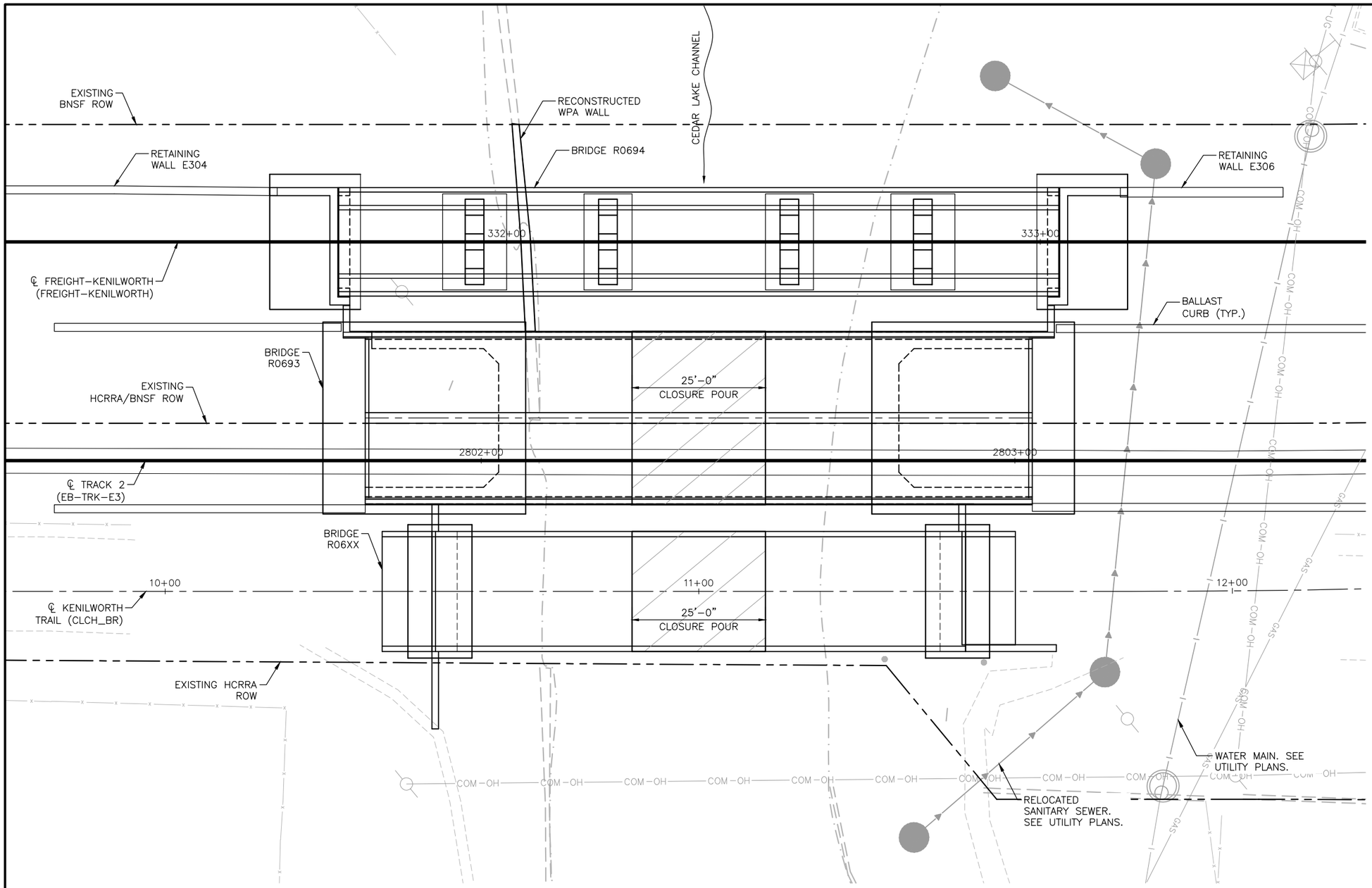

PROPOSED CONSTRUCTION SEQUENCE
STAGE 4

STAGING REQUIREMENTS:

ALL TRACKS SHALL BE KEPT OPEN FOR TRAIN USE DURING CONSTRUCTION EXCEPT WITH PRIOR APPROVAL.

A 25' WIDE HORIZONTAL CLEARANCE SHALL BE MAINTAINED IN THE CHANNEL EXCEPT AS NOTED OTHERWISE.

WITHIN THE 25' WIDE HORIZONTAL CLEARANCE, NO CONSTRUCTION MATERIAL (INCLUDING FORMWORK) MAY EXTEND BELOW ELEVATION 863.03 EXCEPT AS NOTED OTHERWISE.

DURING CONSTRUCTION VIBRATIONS AT ADJACENT PROPERTIES SHALL BE MONITORED AND LIMITED.

DURING THE CLOSURE POUR, A 20' WIDE HORIZONTAL CLEARANCE SHALL BE MAINTAINED. WITHIN THIS 20 FT. HORIZONTAL CLEARANCE, NO CONSTRUCTION MATERIAL MAY EXTEND BELOW EXCAVATION 862.03.

STAGING NOTES:

TEMPORARILY REDUCE ALLOWABLE CLEARANCES AS NOTED ABOVE. INSTALL CLOSURE POUR FORMWORK FOR BRIDGES R0694 AND R06XX. CLOSURE POUR FORMWORK SHALL SPAN OVER THE CHANNEL SUCH THAT THE REDUCED CLEARANCE ENVELOPE IS MAINTAINED.

CONSTRUCT CLOSURE POURS FOR BRIDGES R0693 AND R06XX.

REMOVE TEMP. STABILITY BRACKETS. REMOVE SOE. BACKFILL STRUCTURES.

REMOVE ALL FORMWORK AND FALSEWORK.

CONSTRUCT TRAIL, BALLAST WALLS, BALLAST, TRACK.

SHIFT TRAIL TRAFFIC TO NEW BRIDGE R06XX. REOPEN TO PEDESTRIANS.

RECONSTRUCT WPA WALLS AS REQUIRED.

NO.	DATE	BY	CHECK	DESIGN	REVISION / SUBMITTAL

DESIGNED BY: NRW | CHECKED BY: JSM
DRAWN BY: BAC | CHECKED BY: NRW

AECOM Kimley»Horn

90% SUBMISSION - 01/22/16

METROPOLITAN COUNCIL

SOUTHWEST Green Line LRT Extension

CIVIL - VOLUME 4F
CEDAR LAKE CHANNEL TRAIL BRIDGE
BRIDGE R06XX
STAGING PLAN 4

DISCIPLINE: STRUCTURES
SHEET NAME: CBRR06XX-BRG-STG-004

SHEET 41 OF 41

Jan, 16 2016 11:05 am V:\3400_ADC\CAD\SEGMENT E3\PLAN SHEETS\STRUCTURES\R06XX CLCH–TRL\CBRR06XX–BRG–STG–004.dwg By: Nick.Williamson

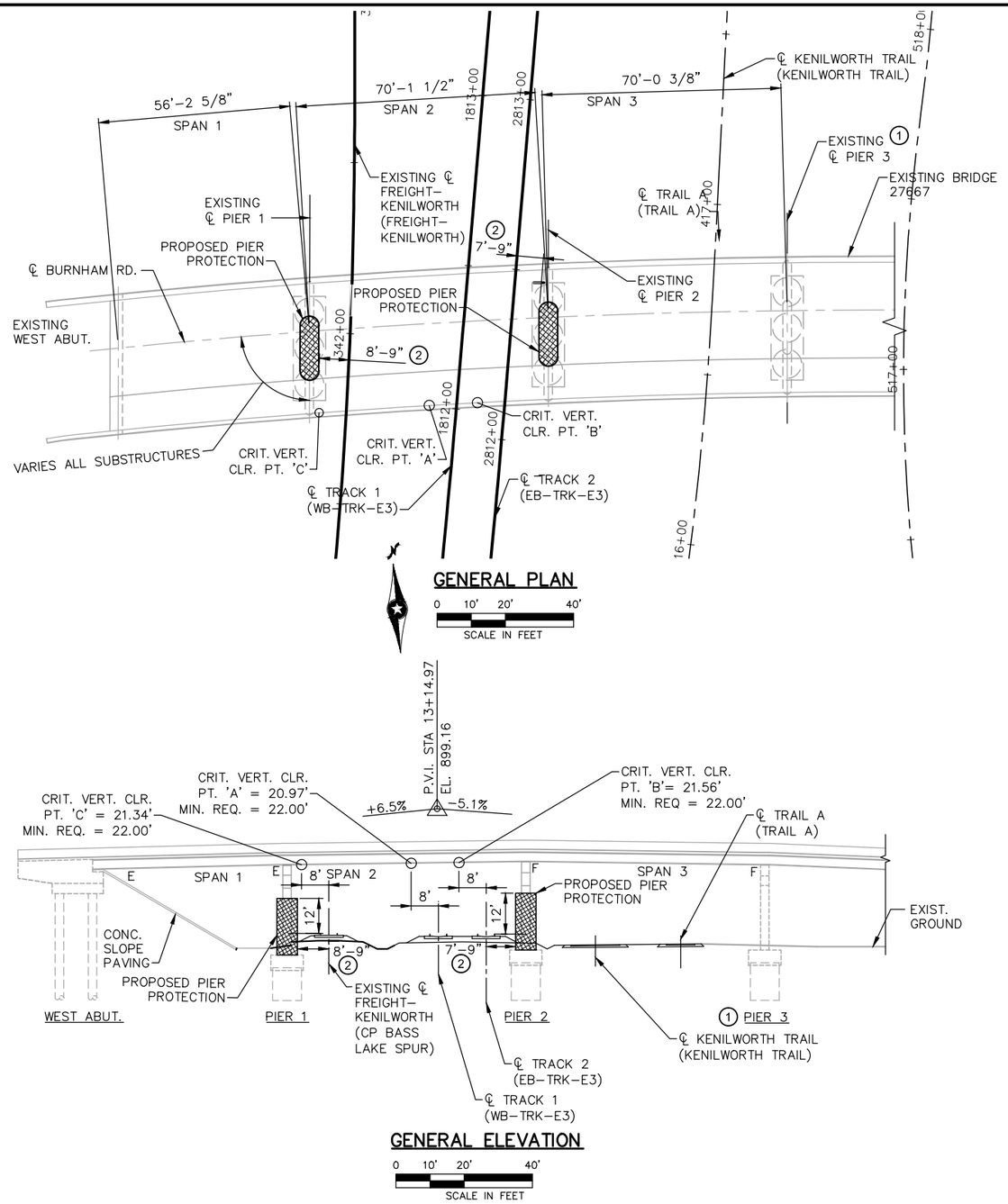

CONSTRUCTION NOTES

THE 2016 EDITION OF THE MINNESOTA DEPARTMENT OF TRANSPORTATION "STANDARD SPECIFICATIONS FOR CONSTRUCTION" SHALL GOVERN.

THE BAR SIZES SHOWN IN THIS PLAN ARE IN U.S. CUSTOMARY DESIGNATIONS. THE FIRST DIGIT OR THE FIRST TWO DIGITS OF EACH BAR MARK INDICATE THE BAR SIZE.

BARS MARKED WITH THE SUFFIX "E" SHALL BE EPOXY COATED IN ACCORDANCE WITH SPEC. 3301.

CONTRACTOR SHALL FIELD VERTFY INPLANCE BRIDGE ELEVATIONS AND DIMENSIONS.

DESIGN DATA

AASHTO LRFD BRIDGE DESIGN SPECIFICATIONS, 7TH EDITION, 2014 WITH 2015 INTERIM REVISIONS

2014 AREMA MANUAL FOR RAILWAY ENGINEERING

LOAD AND RESISTANCE FACTOR DESIGN METHOD SOUTHWEST LIGHT RAIL TRANSIT DESIGN CRITERIA (REVISION 4.0)

RAILWAY COLLISION LOAD = 600 KIP

MATERIAL DESIGN PROPERTIES:
REINFORCED CONCRETE:
f'c = 4000 PSI n = 8
fy = 60000 PSI REINFORCEMENT

ALL REINFORCEMENT STEEL TO BE EPOXY COATED.

LIST OF SHEETS

NO.	DESCRIPTION
1	GENERAL PLAN AND ELEVATION
2	DETAILS 1
3	DETAILS 2
4	REINFORCEMENT 1
5	REINFORCEMENT 2

SCHEDULE OF QUANTITIES

SPEC. SECTION	ITEM	UNIT	QUANTITY
–	CONSTRUCT BRIDGE 27667 PIER PROTECTION	LUMP SUM	LS

COMPONENT ITEM SUMMARY (BR. 27667 PIER PROTECTION)

SPEC. SECTION (2)	COMPONENT ITEM	UNIT (1)	QUANTITY (1)
2401	STRUCTURAL CONCRETE (3B52)	CU YD	
2401	REINFORCEMENT BARS (EPOXY COATED)	POUND	
2411	ARCHITECTURAL CONCRETE TEXTURE	SQ FT	
2451	STRUCTURE EXCAVATION CLASS U	CU YD	
2433	ANCHORAGE, TYPE REINF. BARS	EACH	

(1) QUANTITIES LISTED FOR THE COMPONENT ITEMS OF THE LUMP SUM CONSTRUCT BR 27667 PIER PROTECTION ITEM ARE FOR INFORMATION PURPOSES. ANY ADDITIONAL ITEMS OR CHANGES IN QUANTITIES REQUIRED SHALL BE PROVIDED BY THE CONTRACTOR WITH NO ADDITIONAL COMPENSATION.

(2) MEASUREMENT AND PAYMENT FOR COMPONENT ITEMS SHALL BE PART OF THE LUMP SUM PAYMENT FOR CONSTRUCT BR 27667 PIER PROTECTION. REFER TO MNDOT STANDARD SPECIFICATION OR SPECIAL PROVISION FOR TECHNICAL SPECIFICATION REQUIREMENTS FOR ALL PROVISIONS OTHER THAN MEASUREMENT & PAYMENT REQUIREMENTS.

NOTES:

① PIER PROTECTION NOT REQUIRED ON PIER 3

② HORIZONTAL OFFSET SHOWN IS MEASURED PERPENDICULAR FROM CENTERLINE OF TRACK TO FACE OF PIER PROTECTION AT CLOSEST POINT

PROPOSED PIER PROTECTION

BRIDGE NO. 27667

BURNHAM ROAD OVER CP RR, SOUTHWEST LRT, KENILWORTH TRAIL, AND TRAIL F.

18'-9" LONG CAST IN PLACE PIER PROTECTION BARRIER SUPPORTED ON EXISTING FOUNDATION AT PIER 1 AND PIER 2.

BRIDGE I.D. NO. 501

GENERAL PLAN AND ELEVATION

SEC 32 T 29N R 24W
CITY OF MINNEAPOLIS HENNEPIN COUNTY

JOB NO. T9N635 | STATE PROJECT NO. 9909-01 | MNDOT REVIEW: JOE NIETFELD

NO.	DATE	BY	CHECK	DESIGN	REVISION / SUBMITTAL

DESIGNED BY: AMC CHECKED BY: LKZ
DRAWN BY: CAD CHECKED BY: LKZ

AECOM Kimley»Horn

90% SUBMISSION - 01/22/16

METROPOLITAN COUNCIL

SOUTHWEST Green Line LRT Extension

CIVIL - VOLUME 4F
BURNHAM ROAD (BRIDGE 27667)
PIER PROTECTION
GENERAL PLAN AND ELEVATION

DISCIPLINE: STRUCTURES
SHEET NAME: EX3-STU-PPR-BRHR-VEH-GPE-001

SHEET 1 OF 5

Jan, 12 2016 04:16 pm V:\3400_ADC\CAD\SEGMENT E3\PLAN SHEETS\STRUCTURES\PIER PROTECTION\EX3-STU-PPR-BRHR-VEH-DTL.dwg By: Edgar.McKay

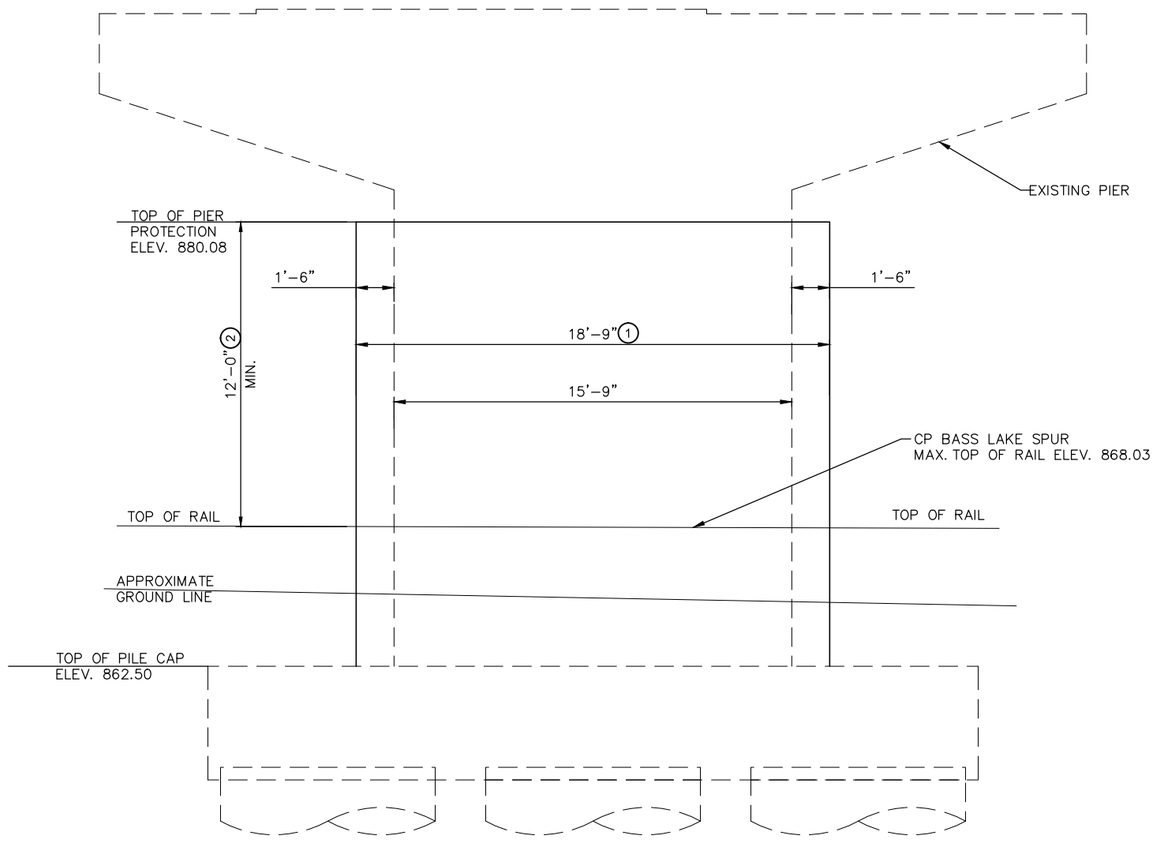

ELEVATION – PIER 1

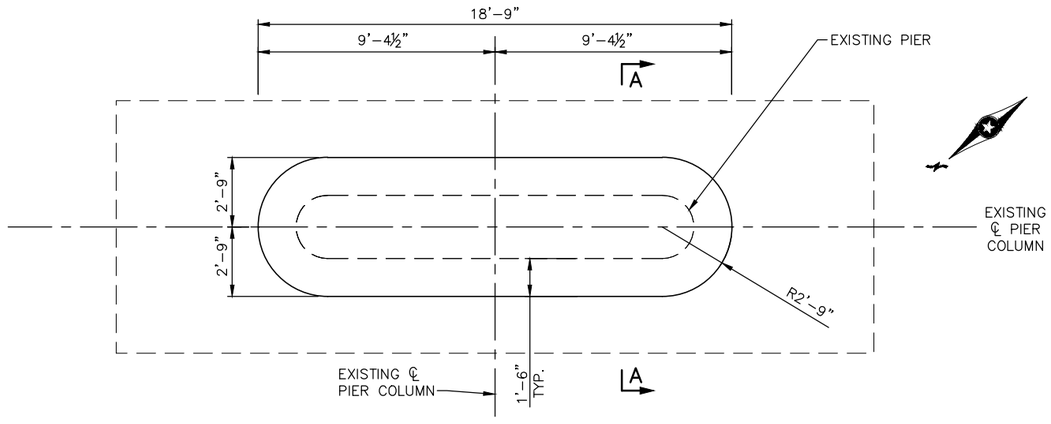

PLAN–PIER 1

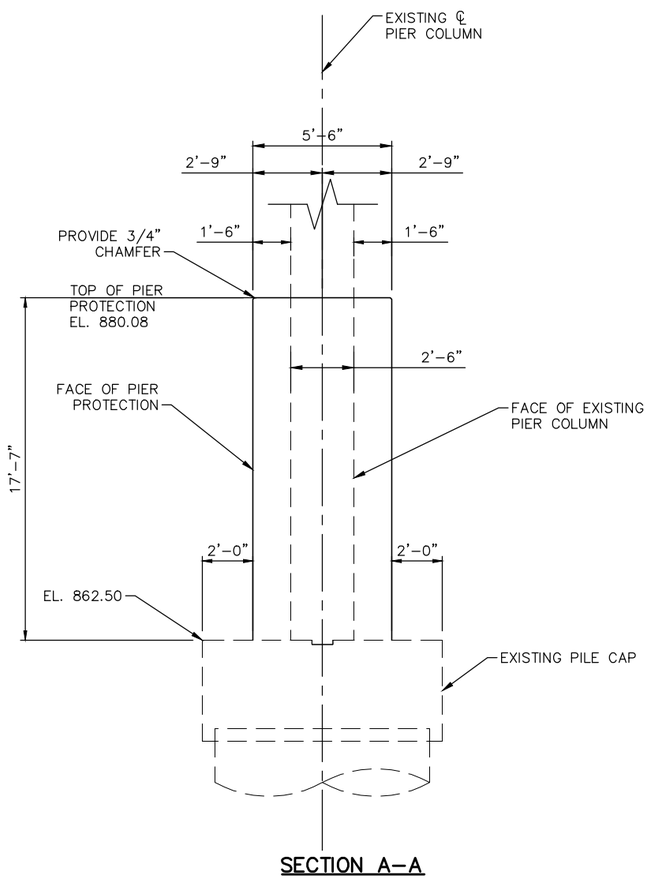

SECTION A–A

NOTES:

(1) STRUCTURAL CONCRETE(3B52)

(2) MINIMUM HEIGHT ABOVE MAX TOP OF RAIL

NO.	DATE	BY	CHECK	DESIGN	REVISION / SUBMITTAL

DESIGNED BY: AMC | CHECKED BY: LKZ

DRAWN BY: EBM | CHECKED BY: LKZ

AECOM Kimley»Horn

90% SUBMISSION - 01/22/16

METROPOLITAN COUNCIL

SOUTHWEST Green Line LRT Extension

CIVIL - VOLUME 4F
BURNHAM ROAD (BRIDGE 27667)
PIER PROTECTION
DETAILS 1

DISCIPLINE: STRUCTURES

SHEET NAME: EX3-STU-PPR-BRHR-VEH-PIR-001

SHEET 2 OF 5

Jan, 12 2016 04:16 pm V:\3400_ADC\CAD\SEGMENT E3\PLAN SHEETS\STRUCTURES\PIER PROTECTION\EX3-STU-PPR-BRHR-VEH-DTL.dwg By: Edgar.McKoy

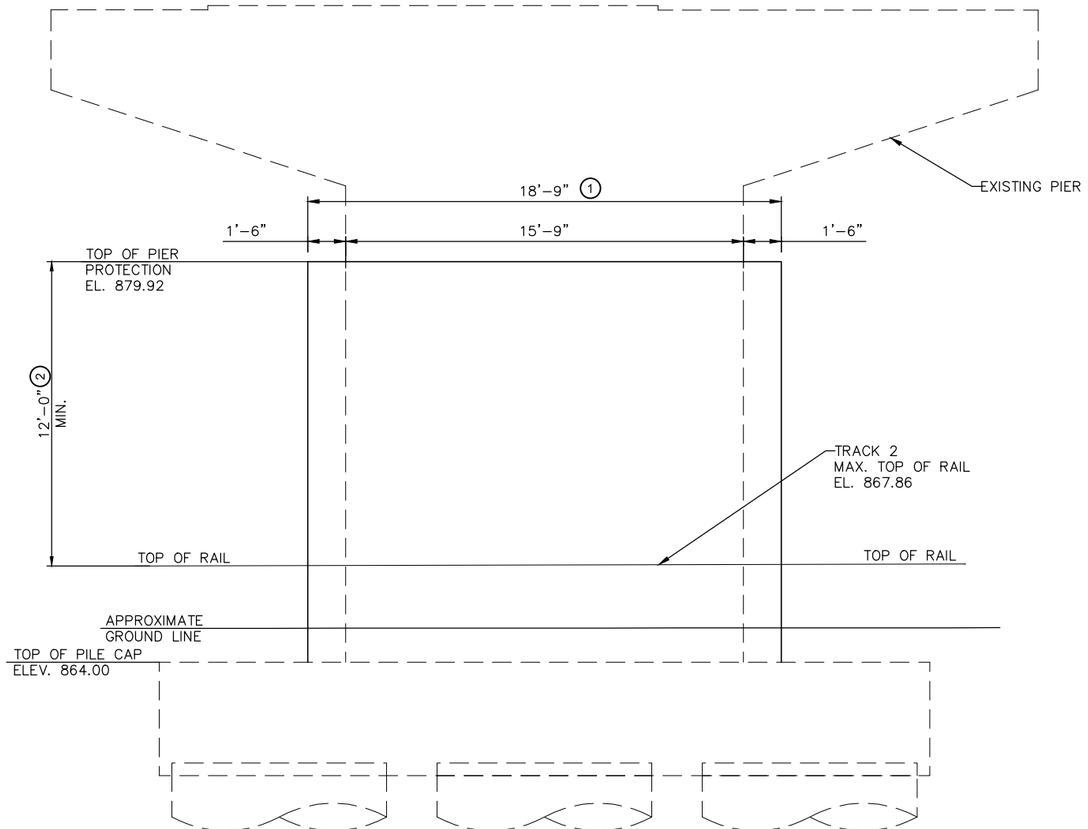

ELEVATION – PIER 2

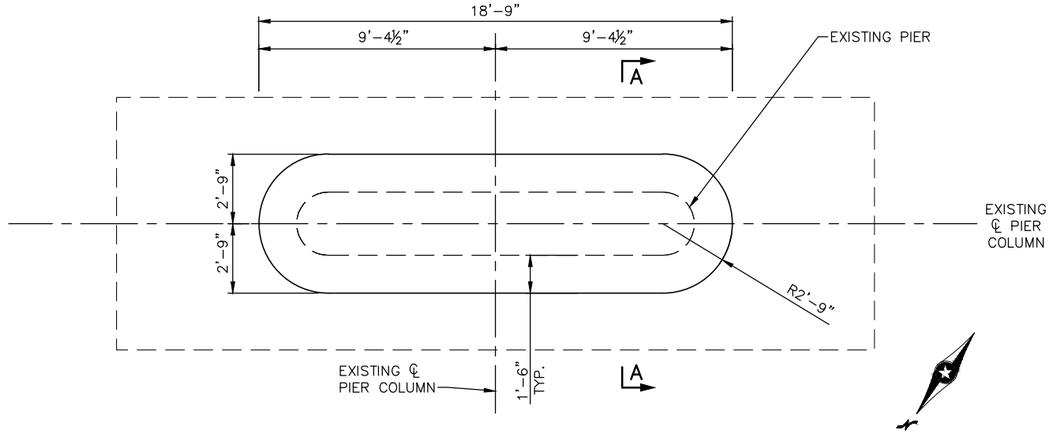

PLAN–PIER 2

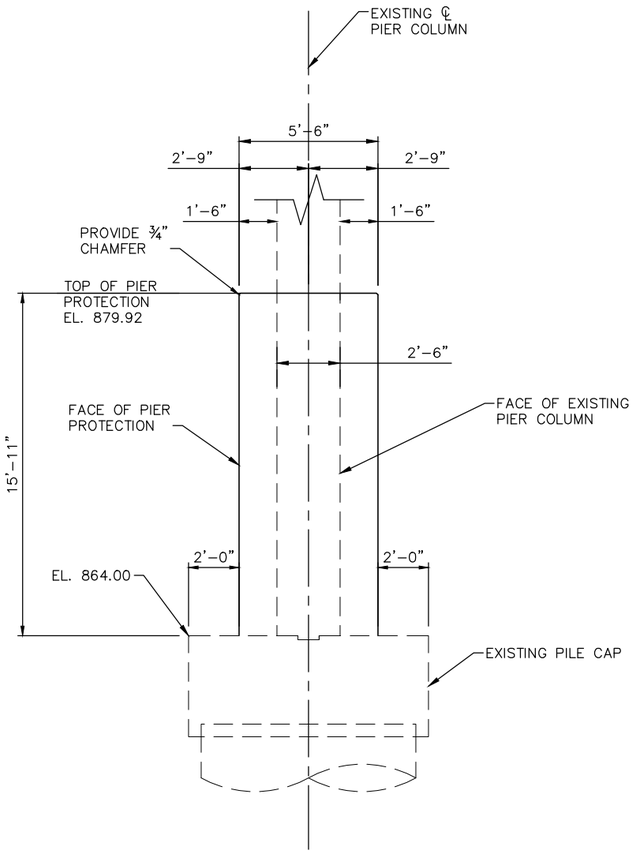

SECTION A–A

NOTES:

(1) STRUCTURAL CONCRETE(3B52)

(2) MINIMUM HEIGHT ABOVE MAX TOP OF RAIL

NO.	DATE	BY	CHECK	DESIGN	REVISION / SUBMITTAL

DESIGNED BY: AMC | CHECKED BY: LKZ

DRAWN BY: EBM | CHECKED BY: LKZ

AECOM Kimley»Horn

90% SUBMISSION - 01/22/16

METROPOLITAN COUNCIL

SOUTHWEST Green Line LRT Extension

CIVIL - VOLUME 4F
BURNHAM ROAD (BRIDGE 27667)
PIER PROTECTION
DETAILS 2

DISCIPLINE: STRUCTURES

SHEET NAME: EX3-STU-PPR-BRHR-VEH-PIR-002

SHEET 3 OF 5

Jan, 12 2016 04:16 pm V:\3400_ADC\CAD\SEGMENT E3\PLAN SHEETS\STRUCTURES\PIER PROTECTION\EX3-STU-PPR-BRHR-VEH-DTL.dwg By: Edgar.McKoy

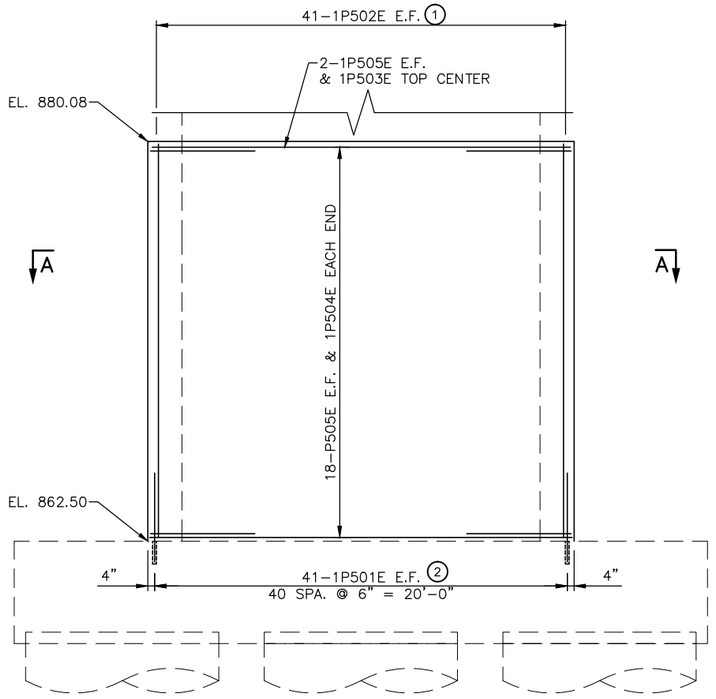

ELEVATION – PIER 1 (4)

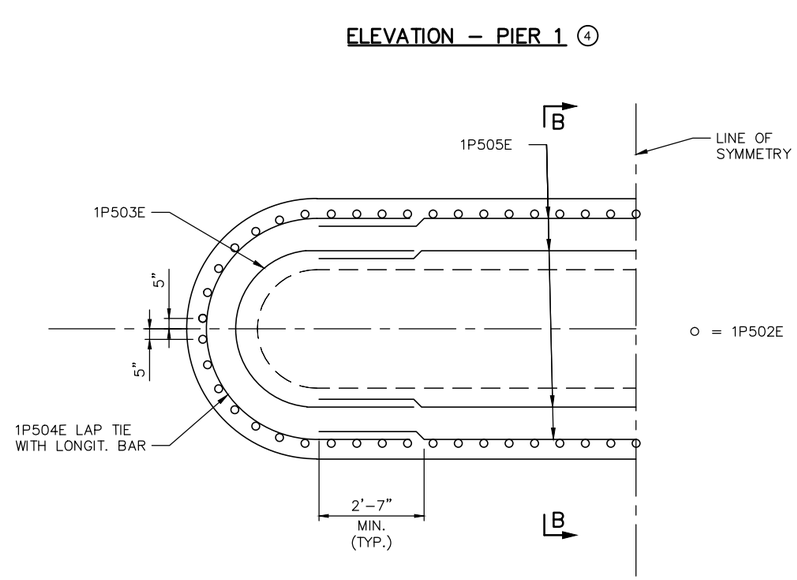

SECTION A–A

BILL OF REINFORCEMENT				
BAR	NO.	LENGTH	SHAPE	LOCATION
1P501E	82	3'-9"	STR.	FOOTING ANCHORAGE
1P502E	82	19'-1"	BENT	BARRIER VERT. E.F.
1P503E	2	8'-0"	BENT	TIE HORIZONTAL
1P504E	36	13'-1"	BENT	TIE HORIZONTAL
1P505E	38	13'-3"	STR.	BARRIER LONG. E.F.

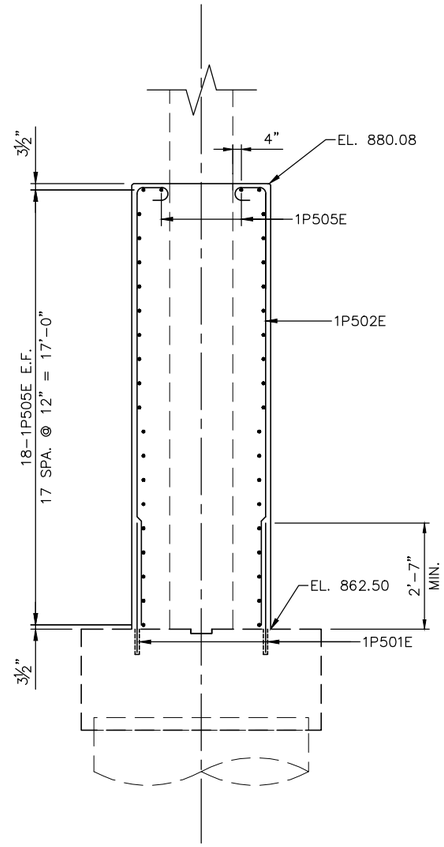

SECTION B–B

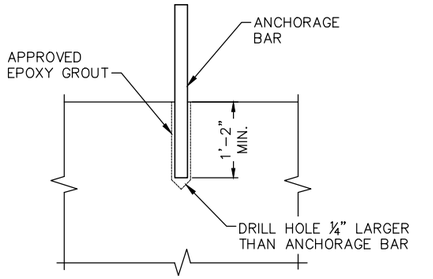

ANCHORAGE DETAIL

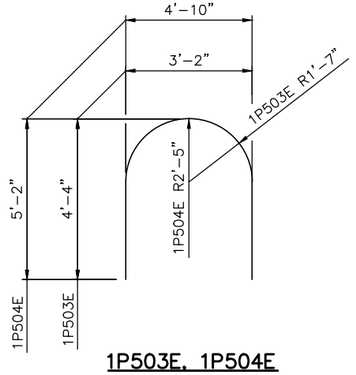

1P503E, 1P504E

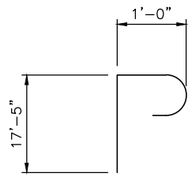

1P502E

NOTES:

(1) LAP WITH 1P501E

(2) MEASURED ALONG CURVE

(3) COAT PIER COLUMN WITH AN APPROVED EPOXY BONDING AGENT

NO.	DATE	BY	CHECK	DESIGN	REVISION / SUBMITTAL

DESIGNED BY: AMC | CHECKED BY: LKZ

DRAWN BY: EBM | CHECKED BY: LKZ

AECOM Kimley»Horn

90% SUBMISSION - 01/22/16

METROPOLITAN COUNCIL

SOUTHWEST Green Line LRT Extension

CIVIL - VOLUME 4F
BURNHAM ROAD (BRIDGE 27667)
PIER PROTECTION
REINFORCEMENT 1

DISCIPLINE: STRUCTURES

SHEET NAME: EX3-STU-PPR-BRHR-VEH-PIR-003

SHEET 4 OF 5

Jan, 12 2016 04:16 pm V:\3400_ADC\CAD\SEGMENT E3\PLAN SHEETS\STRUCTURES\PIER PROTECTION\EX3-STU-PPR-BRHR-VEH-DTL.dwg By: Edgar.McKoy

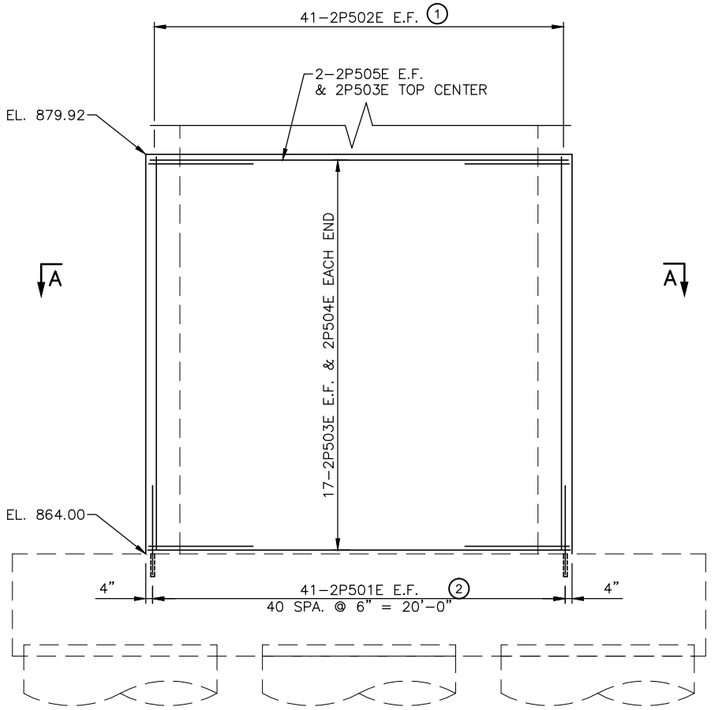

ELEVATION – PIER 2 (3)

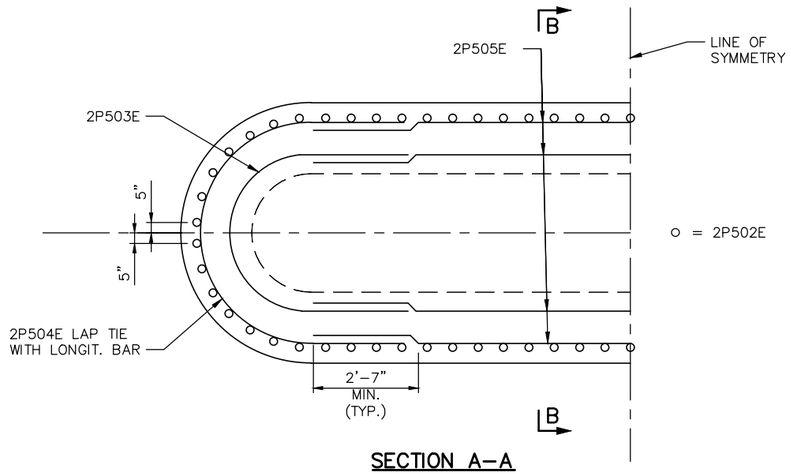

SECTION A–A

BILL OF REINFORCEMENT				
BAR	NO.	LENGTH	SHAPE	LOCATION
2P501E	82	3'-9"	STR.	FOOTING ANCHORAGE
2P502E	82	17'-5"	BENT	BARRIER VERT. E.F.
2P503E	2	8'-0"	BENT	TIE HORIZONTAL
2P504E	34	13'-1"	BENT	TIE HORIZONTAL
2P505E	36	13'-3"	STR.	BARRIER LONG. E.F.

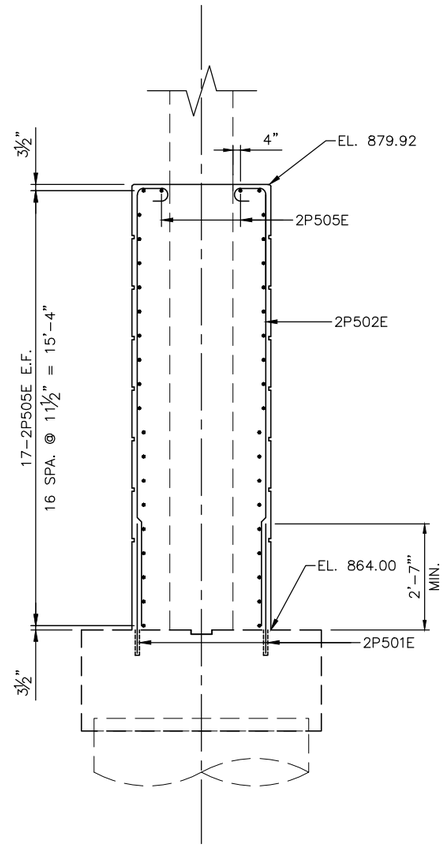

SECTION B–B

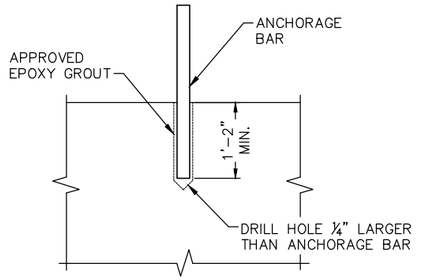

ANCHORAGE DETAIL

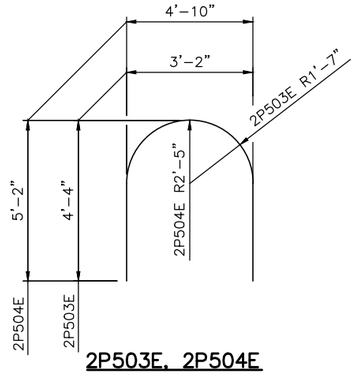

2P503E, 2P504E

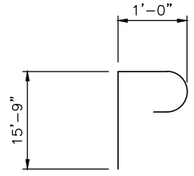

2P502E

NOTES:

1. (1) LAP WITH 2P501E
2. (2) MEASURED ALONG CURVE
3. (3) COAT PIER COLUMN WITH AN APPROVED EPOXY BONDING AGENT

NO.	DATE	BY	CHECK	DESIGN	REVISION / SUBMITTAL

DESIGNED BY: AMC | CHECKED BY: LKZ
DRAWN BY: EBM | CHECKED BY: LKZ

AECOM Kimley»Horn

90% SUBMISSION - 01/22/16

METROPOLITAN COUNCIL

SOUTHWEST Green Line LRT Extension

CIVIL - VOLUME 4F
BURNHAM ROAD (BRIDGE 27667)
PIER PROTECTION
REINFORCEMENT 2

DISCIPLINE: STRUCTURES
SHEET NAME: EX3-STU-PPR-BRHR-VEH-PIR-004

SHEET 5 OF 5

Jan, 12 2016 04:16 pm V:\3400_ADC\CAD\SEGMENT E3\PLAN SHEETS\STRUCTURES\PIER PROTECTION\EX3-STU-PPR-BRHR-VEH-DTL.dwg By: Edgar.McKoy

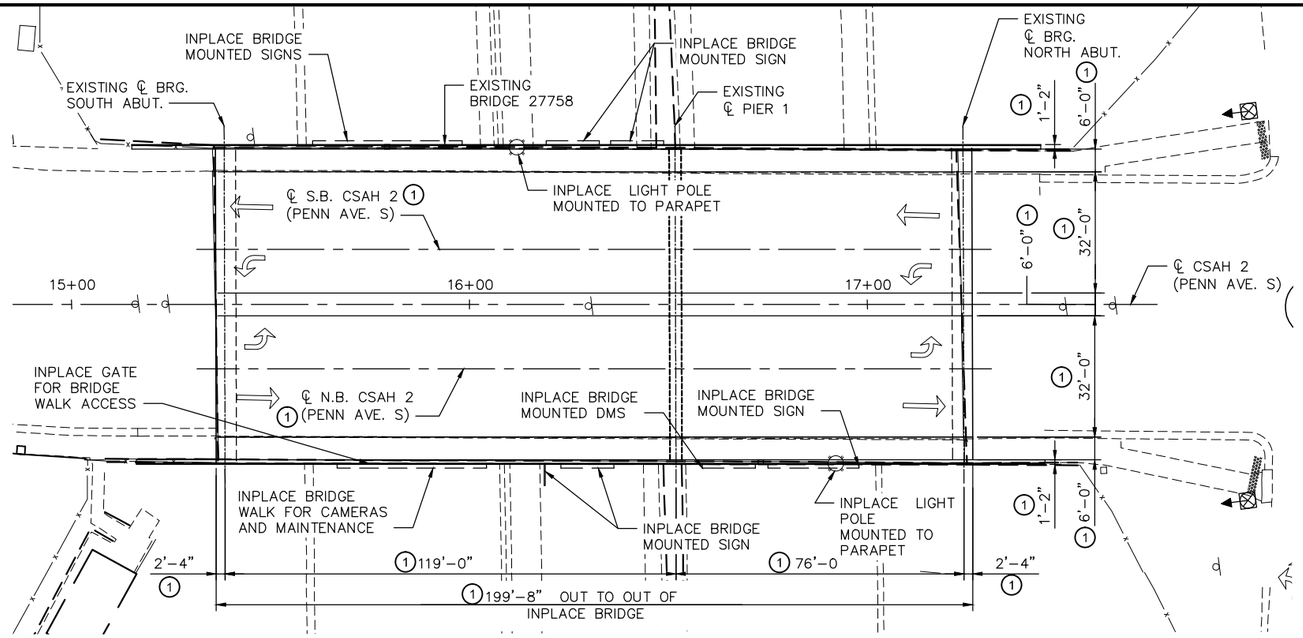

GENERAL PLAN – EXISTING CONDITION

0 10 20 40
SCALE IN FEET

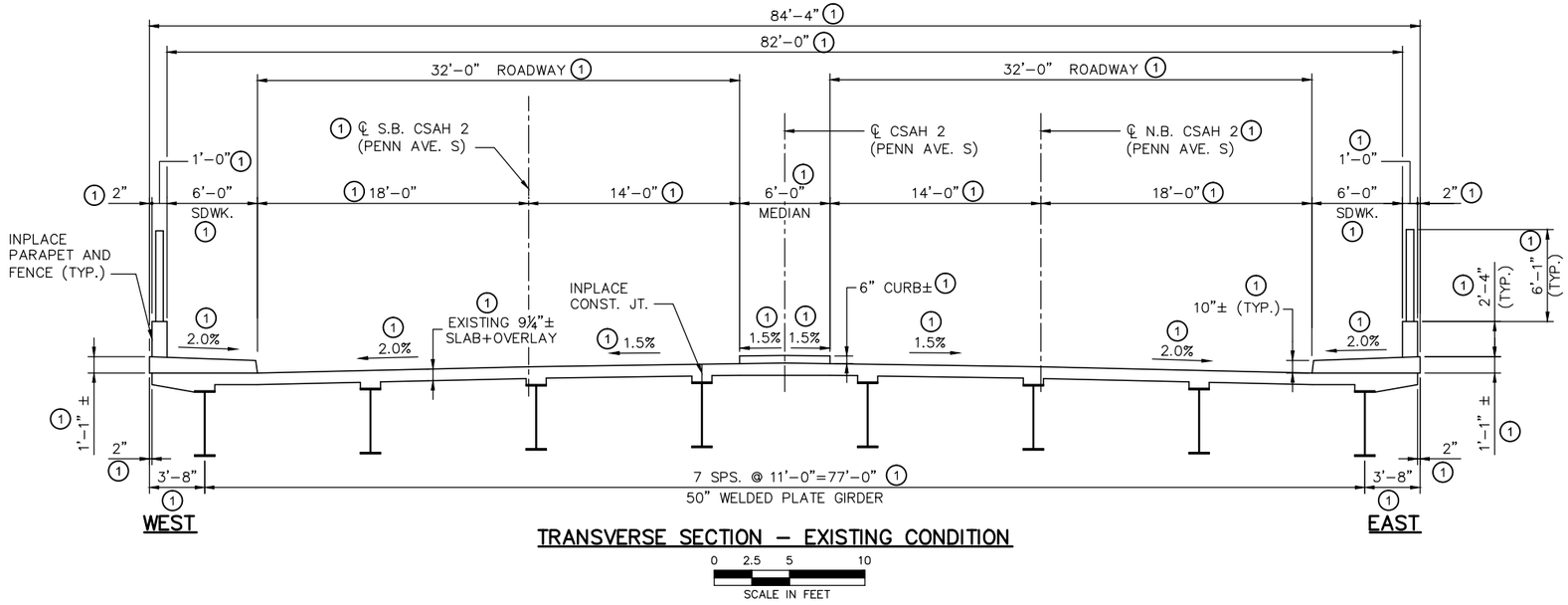

TRANSVERSE SECTION – EXISTING CONDITION

0 2.5 5 10
SCALE IN FEET

DESIGN DATA

AASHTO LRFD BRIDGE DESIGN SPECIFICATIONS, 7TH EDITION, 2014 WITH 2015 INTERIM REVISIONS

SOUTHWEST LIGHT RAIL TRANSIT DESIGN CRITERIA (REVISION 4.0)

LOAD AND RESISTANCE FACTOR DESIGN METHOD

MATERIAL DESIGN PROPERTIES:
REINFORCED CONCRETE:
f'c = 4000 PSI n = 8
fy = 60000 PSI REINFORCEMENT

STRUCTURAL STEEL
fy = 50,000 PSI

DESIGN SPEED: OVER = 30 MPH
UNDER = 60 MPH

(2) DECK AREA 16839 SQ. FT.

(2) HL93 LRFR INVENTORY RATING RF 1.09

(2) HL93 LRFR OPERATING RATING RF 1.41

LIST OF SHEETS

NO.	
1	EXISTING GENERAL PLAN AND SECTIONS
2	SCHEDULE OF QUANTITIES
3	REMOVAL DETAILS
4	PROPOSED GENERAL PLAN AND SECTIONS
5	SIDEWALK DETAILS AND REINFORCEMENT
6	ORNAMENTAL METAL RAILING
7	GATE DETAILS
8	SIDEWALK MODIFICATION DETAILS
9	FRAMING PLAN
10	STIFFENER DETAILS 1
11	STIFFENER DETAILS 2
12	AS–BUILT BRIDGE DATA

(1) PER ORIGINAL BRIDGE PLAN DATED 4–18–86.

(2) LOAD RATING INCLUDES ADDITIONAL INTERMEDIATE DIAPHRAGMS.

BRIDGE NO. 27758

CSAH 2 (PENN AVE S) OVER T.H. 394 LOCATED 1.6 MI. E. OF JCT. T.H. 100 AND T.H. 394

BRIDGE I.D. NO. 301

GENERAL PLAN

SEC 29 T 118N R 24W
CITY OF MINNEAPOLIS HENNEPIN COUNTY

JOB NO. T9N635 STATE PROJECT NO. 9909–01 MNDOT REVIEW: JOE NIETFELD

NO.	DATE	BY	CHECK	DESIGN	REVISION / SUBMITTAL

DESIGNED BY: JCW CHECKED BY: SAD
DRAWN BY: JIK CHECKED BY: SAD

AECOM Kimley»Horn

90% SUBMISSION - 01/22/16

METROPOLITAN COUNCIL

SOUTHWEST Green Line LRT Extension

CIVIL - VOLUME 4F
CSAH 2 (PENN AVE S) (BRIDGE 27758)
SUPERSTRUCTURE MODIFICATIONS
EXISTING GENERAL PLAN AND SECTIONS

DISCIPLINE: STRUCTURES
SHEET NAME: CBR27758-BRM-GPE-001

SHEET 1 OF 12

Jan, 12 2016 02:05 pm v:\3400_ADC\CAD\SEGMENT E4\PLAN SHEETS\STRUCTURES\BR27758 MOD\CBR27758-BRM-GPE-001.dwg By: James.Debrow

CONSTRUCTION NOTES:

THE 2016 EDITION OF THE MINNESOTA DEPARTMENT OF TRANSPORTATION "STANDARD SPECIFICATIONS FOR CONSTRUCTION" SHALL GOVERN.

NO CUTTING WILL BE PERMITTED UNTIL THE CUTTING LIMITS HAVE BEEN OUTLINED BY THE CONTRACTOR AND APPROVED BY THE ENGINEER. REMOVAL AND RECONSTRUCTION SHALL CONFORM TO SPEC. 2433.

THE BAR SIZES SHOWN IN THIS PLAN ARE IN U.S. CUSTOMARY DESIGNATIONS. THE FIRST TWO DIGITS OF EACH BAR MARK INDICATES THE BAR SIZE.

BARS MARKED WITH THE SUFFIX "E" SHALL BE EPOXY COATED IN ACCORDANCE WITH SPEC. 3301.

HATCHED AREAS INDICATE AREAS TO BE REMOVED.

THE CONTRACTOR SHALL FIELD VERIFY INPLACE BRIDGE ELEVATIONS AND DIMENSIONS.

INPLACE CONDUIT IN SIDEWALK TO REMAIN. CARE SHALL BE TAKEN NOT TO DAMAGE THE CONDUIT OR ITS CONTENTS.

THE CONTRACTOR SHALL MAKE FIELD MEASUREMENTS, AS NECESSARY, PRIOR TO FABRICATION OF COVER PLATES TO ASSURE PROPER FIT IN THE FINAL WORK.

INPLACE EXPANSION DEVICE TO REMAIN. CARE SHALL BE TAKEN NOT TO DAMAGE THE EXPANSION DEVICE.

INPLACE LIGHT POLES TO BE REMOVED AND REPLACED WITH NEW LIGHT POLES AT SAME LOCATION, SEE LIGHTING PLANS.

SCHEDULE OF QUANTITIES

SPEC. SECTION	ITEM	UNIT	QUANTITY
–	MODIFICATIONS TO BRIDGE 27758	LUMP SUM	LS

COMPONENT ITEM SUMMARY (BRIDGE 27758)

	SPEC. SECTION (6)	COMPONENT ITEM	UNIT (5)	QUANTITY (5)
	2104	REMOVE LIGHT POLES	EACH	2
(1)	2401	SIDEWALK CONCRETE (3F52)	SQ. FT.	1,967
	2401	REINFORCING BARS (EPOXY COATED)	POUND	2,820
	2401	RESURFACE EXISTING PARAPET RAILING EXTERIOR	SQ. FT.	918
	2402	ACRYLIC PAINT	SQ. FT.	1,312
(4)	2402	STRUCTURAL STEEL	POUND	9,912
	2402	ORNAMENTAL METAL RAILING TYPE MPLS	LIN. FT.	511
	2404	CHIP SEAL WEARING COURSE	SQ. FT.	3,934
	2433	REMOVE BITUMINOUS WEARING COURSE	SQ. FT.	787
(2)	2433	REMOVE CONCRETE SIDEWALK	SQ. FT.	394
(3)	2433	REMOVE CHAIN LINK FENCE	LIN. FT.	524

(1) SIDEWALK CONCRETE (3F52) VOLUME IS APPROXIMATELY 62 CUBIC YARDS.

(2) INCLUDES REMOVAL OF 1'–0" OF EXISTING SIDEWALK ON EACH SIDE OF THE BRIDGE.

(3) INCLUDES REMOVAL OF ALL EXISTING CHAIN LINK FENCE ON EACH SIDE OF THE BRIDGE.

(4) INCLUDES STRUCTURAL STEEL FOR INTERMEDIATE DIAPHRAGMS AND STEEL COVER PLATES.

(5) QUANTITIES LISTED FOR THE COMPONENT ITEMS OF THE LUMP SUM MODIFICATIONS TO BRIDGE 27758 ITEM ARE FOR INFORMATION PURPOSES. ANY ADDITIONAL ITEMS OR CHANGES IN QUANTITIES REQUIRED SHALL BE PROVIDED BY THE CONTRACTOR WITH NO ADDITIONAL COMPENSATION.

(6) MEASUREMENT AND PAYMENT FOR COMPONENT ITEMS SHALL BE PART OF THE LUMP SUM PAYMENT FOR MODIFICATIONS TO BRIDGE 27758. REFER TO MNDOT STANDARD SPECIFICATION OR SPECIAL PROVISION FOR TECHNICAL SPECIFICATION REQUIREMENTS FOR ALL PROVISIONS OTHER THAN MEASUREMENT & PAYMENT REQUIREMENTS.

NO.	DATE	BY	CHECK	DESIGN	REVISION / SUBMITTAL

DESIGNED BY: JCW CHECKED BY: SAD
DRAWN BY: JIK CHECKED BY: SAD

AECOM Kimley»Horn

90% SUBMISSION - 01/22/16

METROPOLITAN COUNCIL

SOUTHWEST Green Line LRT Extension

CIVIL - VOLUME 4F
CSAH 2 (PENN AVE S) (BRIDGE 27758)
SUPERSTRUCTURE MODIFICATIONS
SCHEDULE OF QUANTITIES

DISCIPLINE: STRUCTURES
SHEET NAME: CBR27758-BRM-TRN-001

SHEET 2 OF 12

Jan, 12 2016 02:05 pm v:\3400_ADC\CAD\SEGMENT E4\PLAN SHEETS\STRUCTURES\BR27758 MOD\CBR27758-BRM-TRN-001.dwg By: James.Debrow

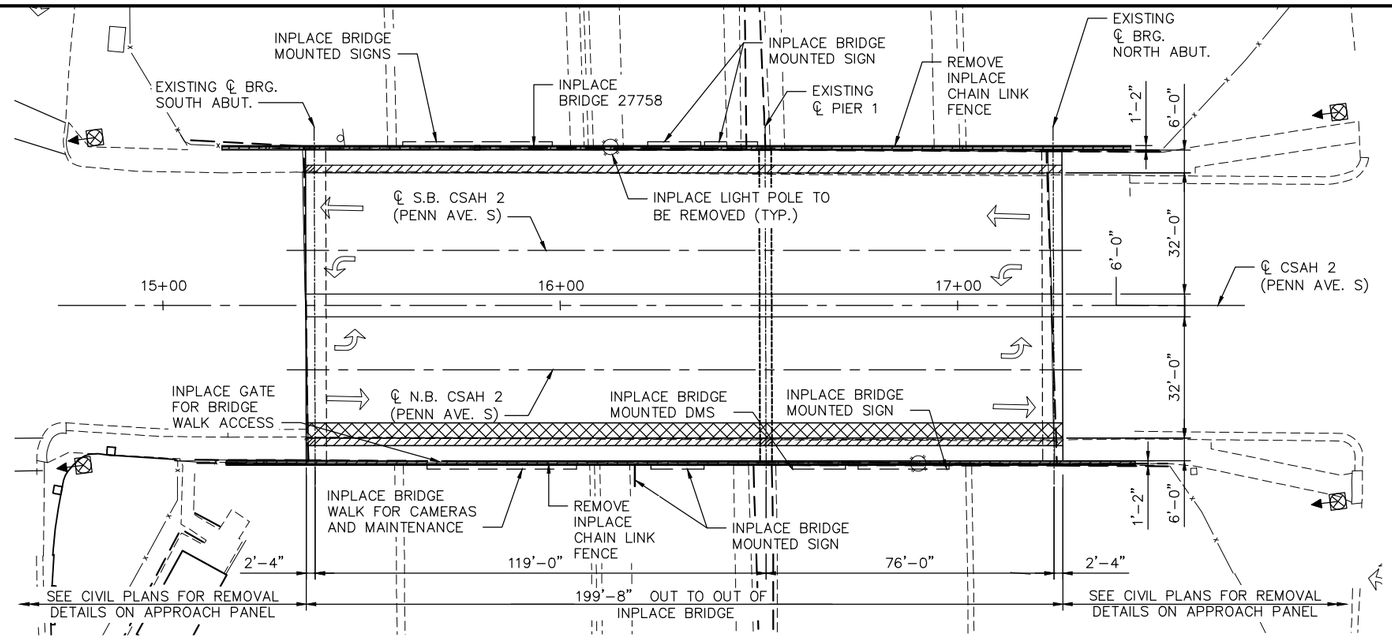

GENERAL PLAN – REMOVALS

0 10 20 40
SCALE IN FEET

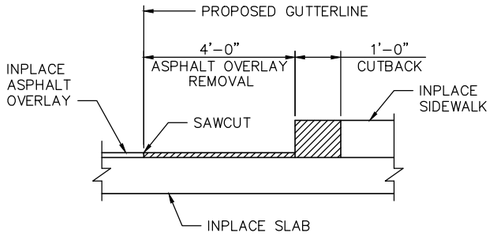

DETAIL "A"

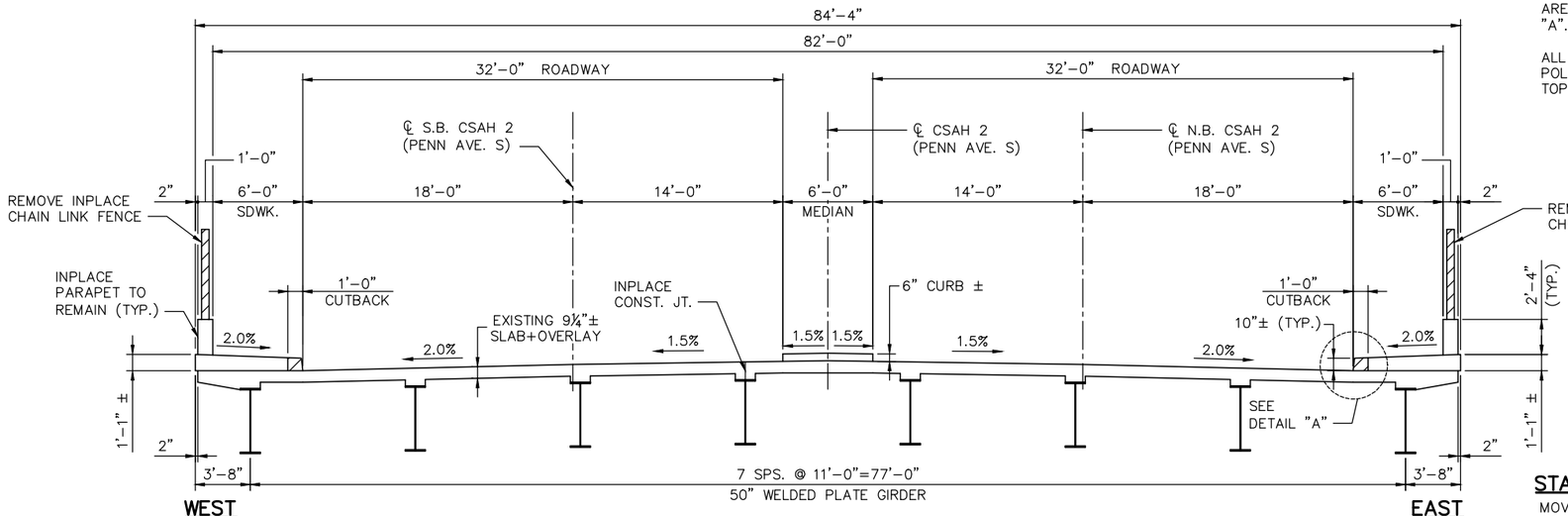

TRANSVERSE SECTION – REMOVALS

0 2.5 5 10
SCALE IN FEET

NOTES:

DENOTES AREAS TO BE REMOVED.

DENOTES AREAS OF INPLACE ASPHALT OVERLAY TO BE REMOVED ON EAST SIDE OF BRIDGE. ASPHALT TO BE REMOVED FOR AN APPROX. WIDTH OF 4'–0" IN THE AREA UNDER THE PROPOSED SIDEWALK. SEE DETAIL "A".

ALL INPLACE ANCHOR BOLTS FOR FENCE AND LIGHT POLES THAT ARE REMOVED SHALL BE CUT FLUSH WITH TOP OF INPLACE PARAPET.

STAGING NOTES:

MOVE TRAFFIC TO ADJACENT LANES DURING CONSTRUCTION ACTIVITY IN OUTER LANES.

SIDEWALK TO BE CLOSED DURING REMOVAL AND CONSTRUCTION.

NO.	DATE	BY	CHECK	DESIGN	REVISION / SUBMITTAL

DESIGNED BY: JCW | CHECKED BY: SAD
DRAWN BY: JIK | CHECKED BY: SAD

AECOM Kimley»Horn

90% SUBMISSION - 01/22/16

METROPOLITAN COUNCIL

SOUTHWEST Green Line LRT Extension

CIVIL - VOLUME 4F
CSAH 2 (PENN AVE S) (BRIDGE 27758)
SUPERSTRUCTURE MODIFICATIONS
REMOVAL DETAILS

DISCIPLINE: STRUCTURES
SHEET NAME: CBR27758-BRM-DTL-001

SHEET 3 OF 12

Jan, 12 2016 02:07 pm V:\3400_ADC\CAD\SEGMENT E4\PLAN SHEETS\STRUCTURES\BR27758 MOD\CBR27758-BRM-DTL-001.dwg By: James.Debrow

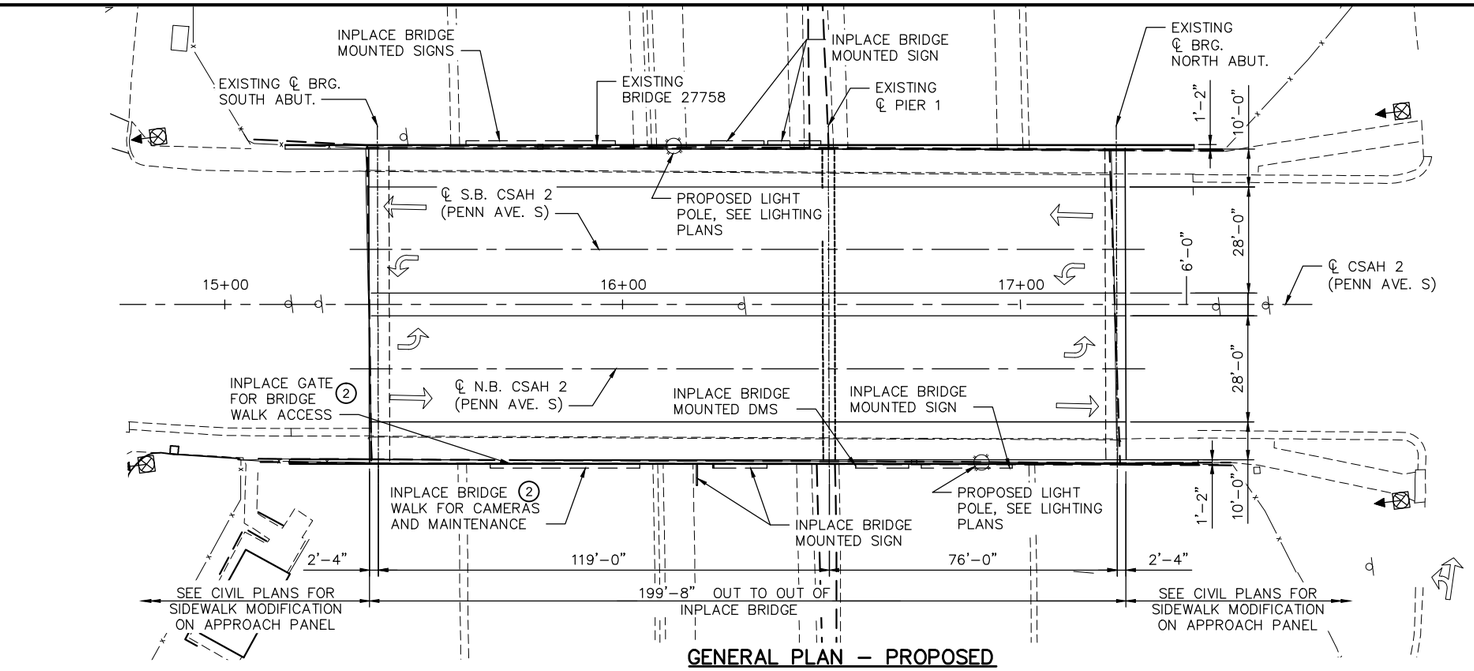

GENERAL PLAN – PROPOSED

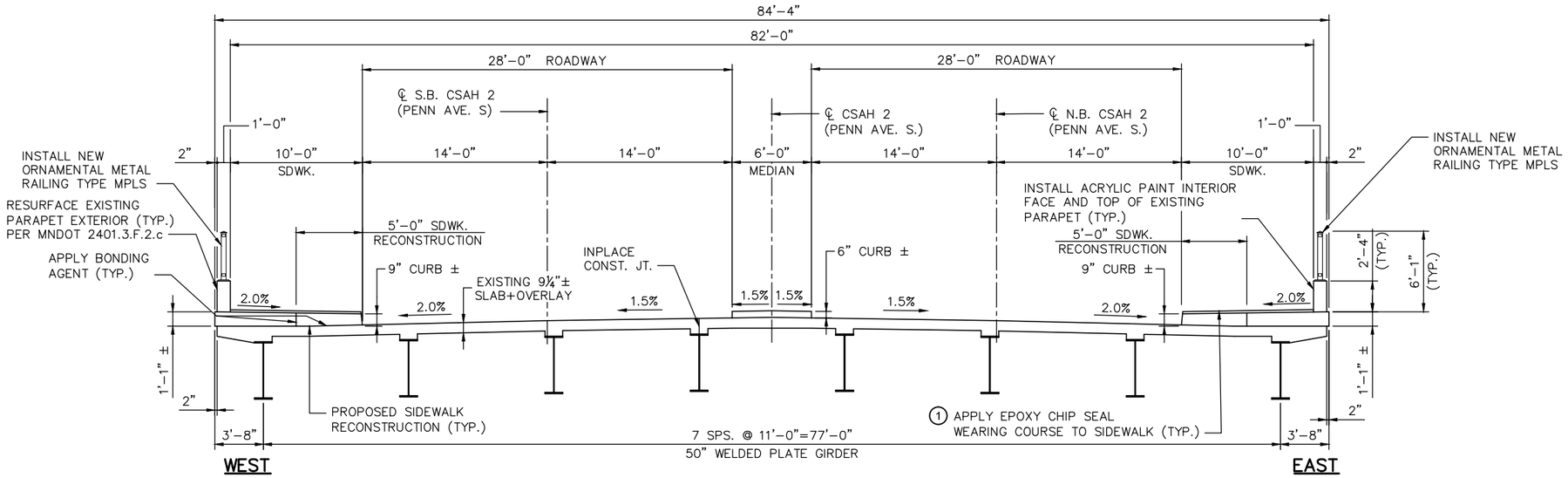

TRANSVERSE SECTION – PROPOSED

0 2.5 5 10
SCALE IN FEET

NOTES:

1. EPOXY CHIP SEAL WEARING COURSE TO BE APPLIED ONE YEAR FOLLOWING SIDEWALK RECONSTRUCTION.
2. ACCESS TO BRIDGE WALK SHALL BE MAINTAINED AND INCORPORATED INTO ORNAMENTAL METAL RAILING TYPE MPLS.

NO.	DATE	BY	CHECK	DESIGN	REVISION / SUBMITTAL

DESIGNED BY: JCW | CHECKED BY: SAD
DRAWN BY: JIK | CHECKED BY: SAD

AECOM Kimley»Horn

90% SUBMISSION - 01/22/16

METROPOLITAN COUNCIL

SOUTHWEST Green Line LRT Extension

CIVIL - VOLUME 4F
CSAH 2 (PENN AVE S) (BRIDGE 27758)
SUPERSTRUCTURE MODIFICATIONS
PROPOSED GENERAL PLAN AND SECTIONS

DISCIPLINE: STRUCTURES
SHEET NAME: CBR27758-BRM-GPE-002

SHEET 4 OF 12

Jan, 12 2016 02:10 pm v:\3400_ADC\CAD\SEGMENT E4\PLAN SHEETS\STRUCTURES\BR27758 MOD\CBR27758-BRM-GPE-002.dwg By: James.Debrow

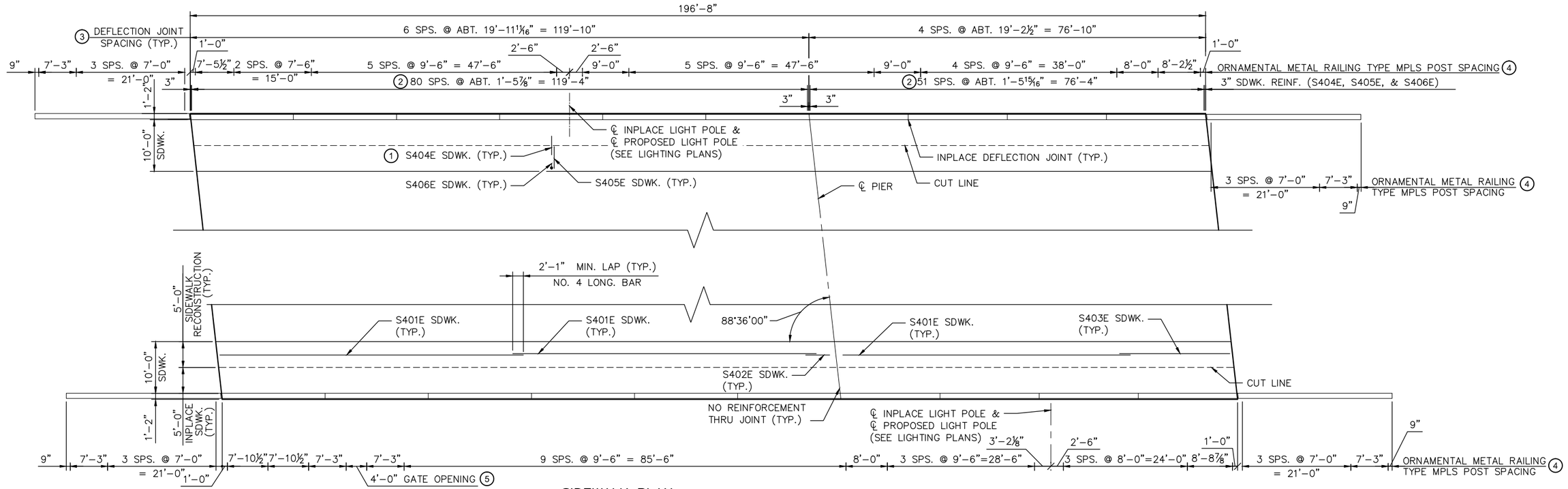

SIDEWALK PLAN

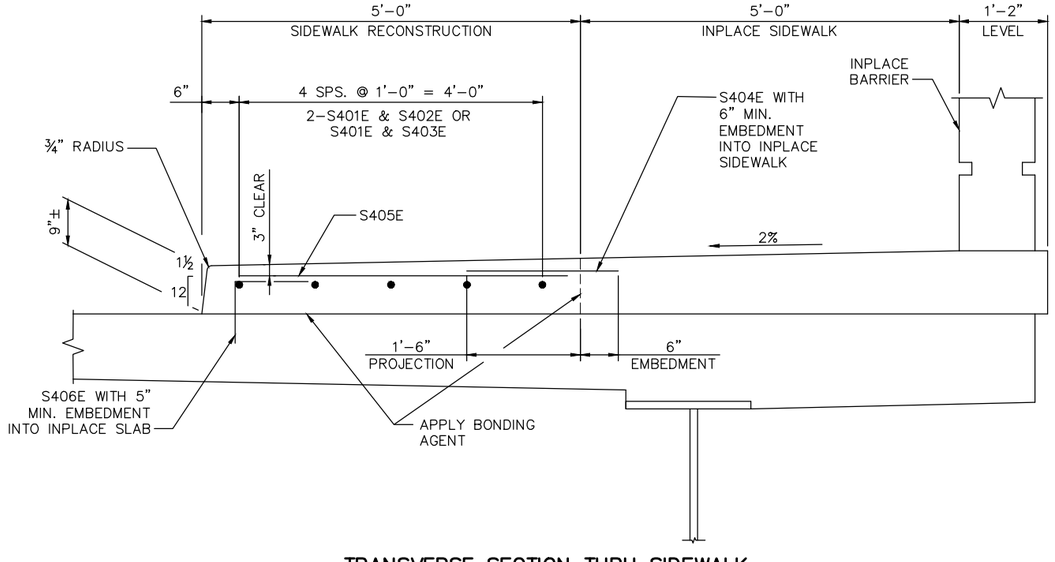

TRANSVERSE SECTION THRU SIDEWALK

NOTE:
INPLACE SLAB, SIDEWALK, AND BARRIER REINFORCING NOT SHOWN FOR CLARITY.

INPLACE TRANSVERSE, LONGITUDINAL, AND TIE SIDEWALK BARS NOT COMPLETELY EXPOSED TO REMAIN INPLACE. CLEAN, STRAIGHTEN, AND ADJUST AS REQUIRED. COMPLETELY EXPOSED BARS TO BE REMOVED AND DISPOSED OF.

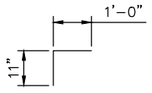

S406E

BILL OF REINFORCEMENT FOR SIDEWALK				
BAR	NO.	LENGTH	SHAPE	LOCATION
S401E	30	60'-0"	STR.	SIDEWALK LONG.
S402E	10	3'-8"	STR.	SIDEWALK LONG.
S403E	10	18'-7"	STR.	SIDEWALK LONG.
S404E	266	2'-0"	STR.	SIDEWALK TRANS.
S405E	266	4'-4"	STR.	SIDEWALK TRANS.
S406E	266	1'-11"	BENT	SIDEWALK TIE

1. DOWEL S404E BARS 6" INTO INPLACE SIDEWALK.
2. SPACE S404E BARS TO MATCH INPLACE BARS FROM 1986 PLANS.
3. PER ORIGINAL BRIDGE PLANS DATED 4-18-86.
4. POST SPACINGS MAY BE ADJUSTED AS NECESSARY FOR FIELD CONDITIONS THAT VARY FROM 1986 PLANS. MAX. POST SEPARATION IS 10'-0".
5. FIELD VERIFY EXISTING GATE LOCATION AND ADJUST POST SPACING AS NECESSARY TO MAINTAIN ACCESS TO INPLACE WALKWAY.

NO.	DATE	BY	CHECK	DESIGN	REVISION / SUBMITTAL

DESIGNED BY: JCW CHECKED BY: SAD
DRAWN BY: JIK CHECKED BY: SAD

AECOM Kimley»Horn

90% SUBMISSION - 01/22/16

METROPOLITAN COUNCIL

SOUTHWEST Green Line LRT Extension

CIVIL - VOLUME 4F
CSAH 2 (PENN AVE S) (BRIDGE 27758)
SUPERSTRUCTURE MODIFICATIONS
SIDEWALK DETAILS AND REINFORCEMENT

DISCIPLINE: STRUCTURES
SHEET NAME: CBR27758-BRM-DTL-002

SHEET 5 OF 12

Jan, 12 2016 02:10 pm v:\3400_ADC\CAD\SEGMENT E4\PLAN SHEETS\STRUCTURES\BR27758 MOD\CBR27758-BRM-DTL-002.dwg By: James.Debrow

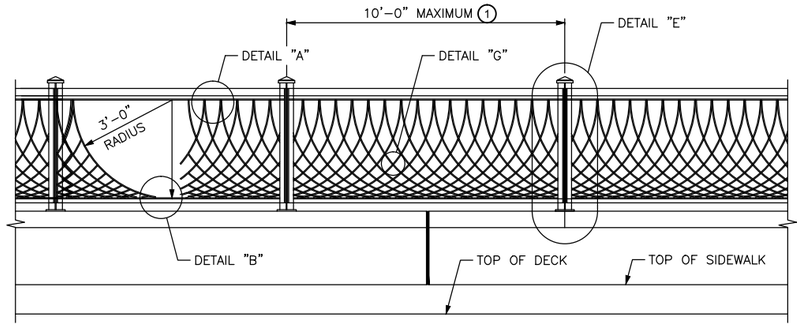

OUTSIDE ELEVATION

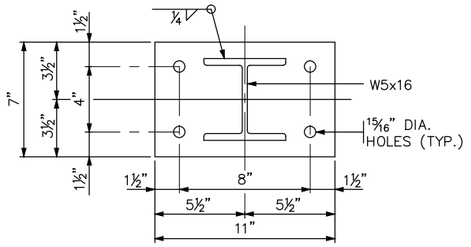

BASE PLATE PLAN

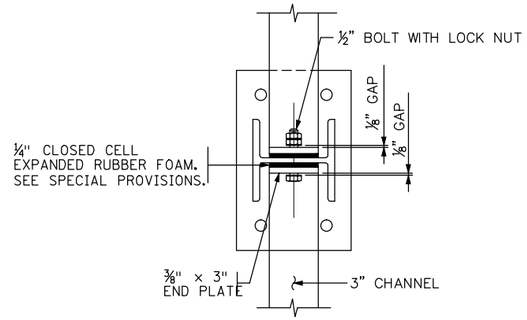

SECTION F-F

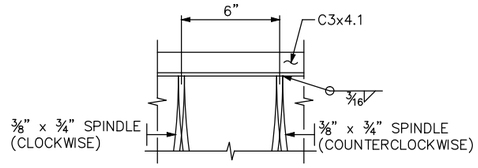

DETAIL "A"

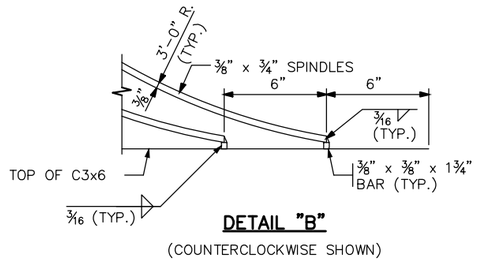

DETAIL "B"
(COUNTERCLOCKWISE SHOWN)

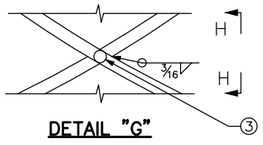

DETAIL "G"



SECTION H-H

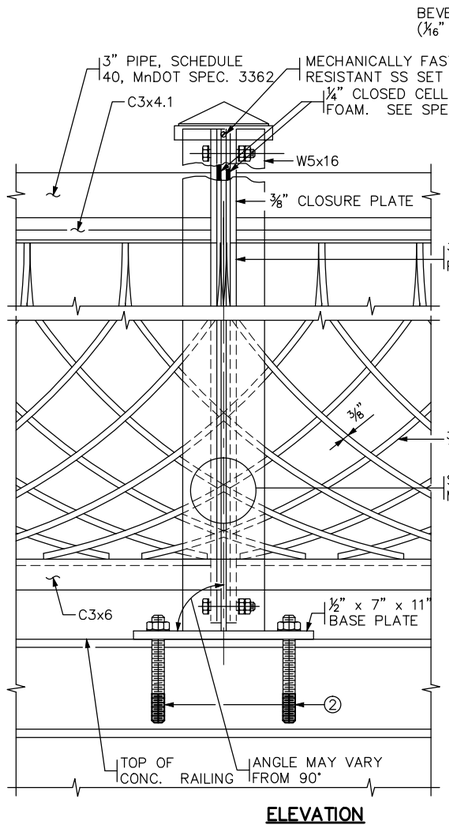

ELEVATION

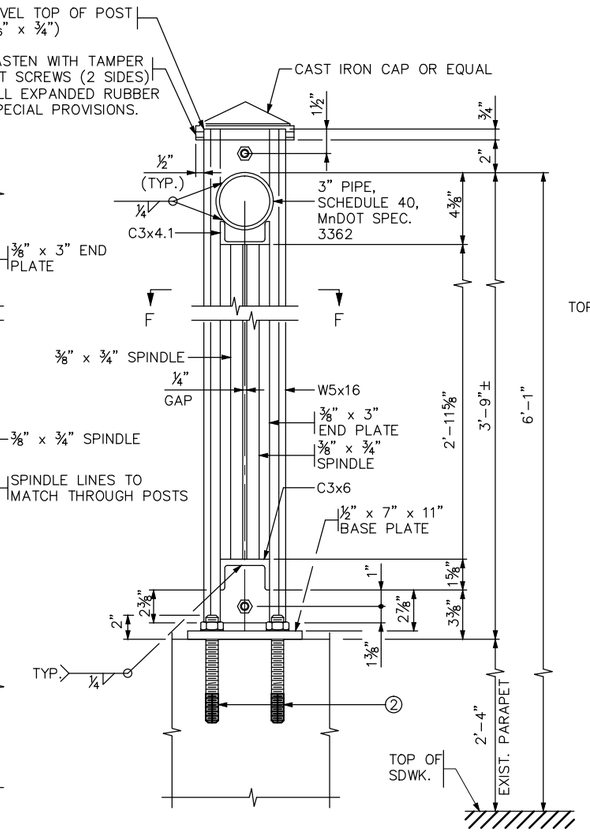

DETAIL "E"
(TYPICAL RAILPOST)

TYPICAL SECTION

NOTES:

WEIGHT OF METAL RAILING IS APPROXIMATELY 45 LBS./FT.

ALL POSTS TO BE VERTICAL.

⅜" x 3" END PLATES TO BE VERTICAL.

ALL STEEL SHALL COMPLY WITH Mn/DOT SPEC. 3306 UNLESS NOTED.

MECHANICALLY GALVANIZE BOLTS, NUTS AND WASHERS PER A.S.T.M. B695, CLASS 50.

SHOP APPLY PAINT IN ACCORDANCE WITH Mn/DOT SPEC. 2478.

(1) DISTANCE BETWEEN STEEL POSTS SHALL BE IN 6" INCREMENTS

(2) ⅝" DIA. CHEMICAL ANCHOR RODS, Mn/DOT SPEC. 3385, TYPE A, WITH HEX NUTS AND WASHERS. MINIMUM ULTIMATE BOND STRENGTH SHALL BE 20,000 POUNDS, WITH A MINIMUM 5" EMBEDMENT LENGTH. SEE SPECIAL PROVISIONS.

(3) WELD ¼" THICK x ⅜" DIA. SPACER AT ONE INTERSECTION PER BAR AT LOCATION SHOWN.

NO.	DATE	BY	CHECK	DESIGN	REVISION / SUBMITTAL

DESIGNED BY: JCW CHECKED BY: SAD
DRAWN BY: JIK CHECKED BY: SAD

AECOM Kimley»Horn

90% SUBMISSION - 01/22/16

METROPOLITAN COUNCIL

SOUTHWEST Green Line LRT Extension

CIVIL - VOLUME 4F
CSAH 2 (PENN AVE S) (BRIDGE27758)
SUPERSTRUCTURE MODIFICATIONS
ORNAMENTAL METAL RAILING

DISCIPLINE: STRUCTURES
SHEET NAME: CBR27758-BRM-DTL-003

SHEET 6 OF 12

Jan, 12 2016 02:11 pm v:\3400_ADC\CAD\SEGMENT E4\PLAN SHEETS\STRUCTURES\BR27758 MOD\CBR27758-BRM-DTL-003.dwg By: James.Debrow

NOTES:

SEE "ORNAMENTAL METAL RAILING TYPE MPLS" SHEET FOR NOTES

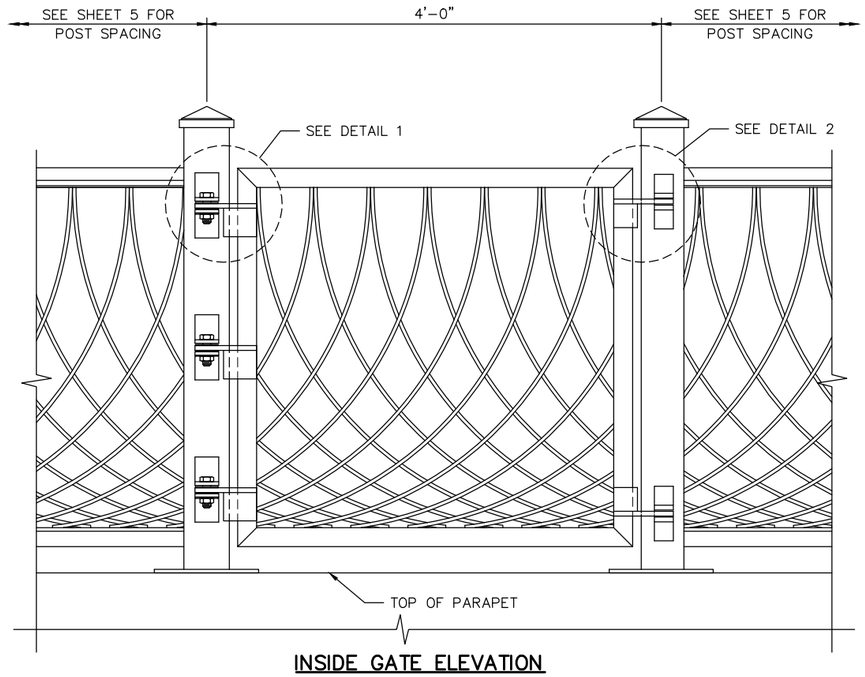

INSIDE GATE ELEVATION

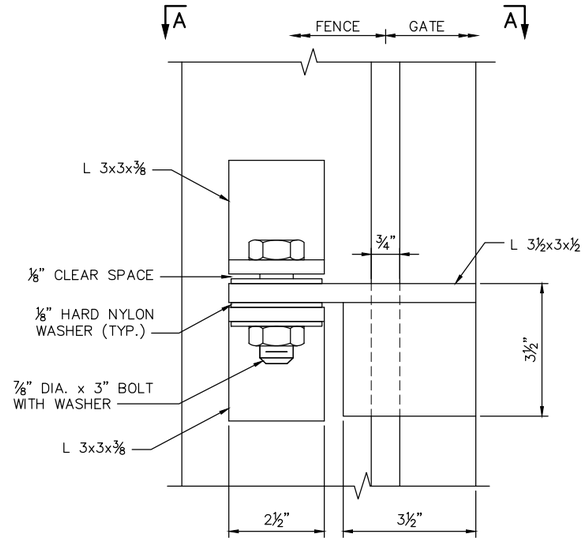

DETAIL 1
GATE HINGE ELEVATION

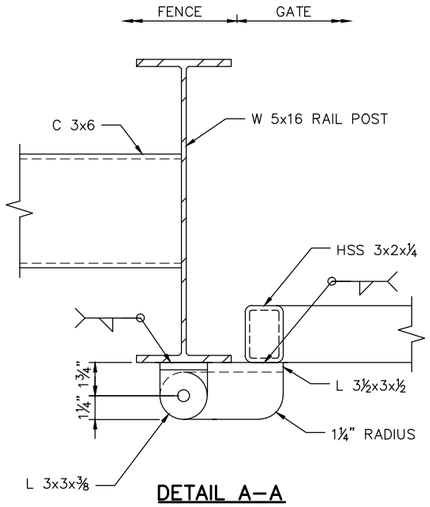

DETAIL A–A
GATE HINGE PLAN

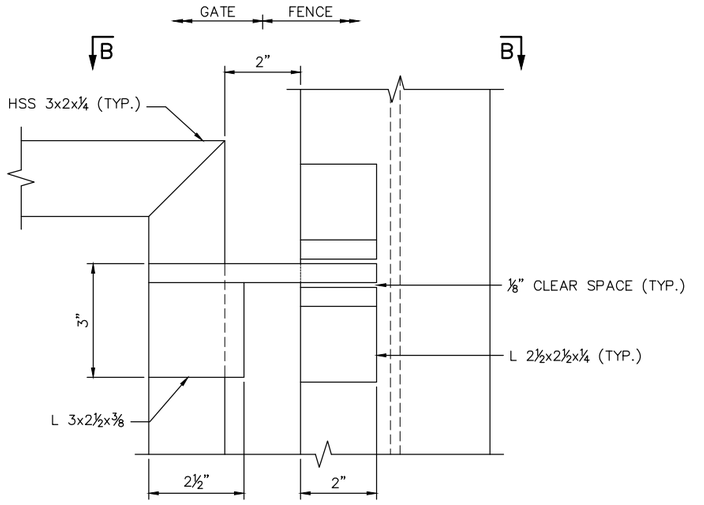

DETAIL 2
GATE LOCK ELEVATION

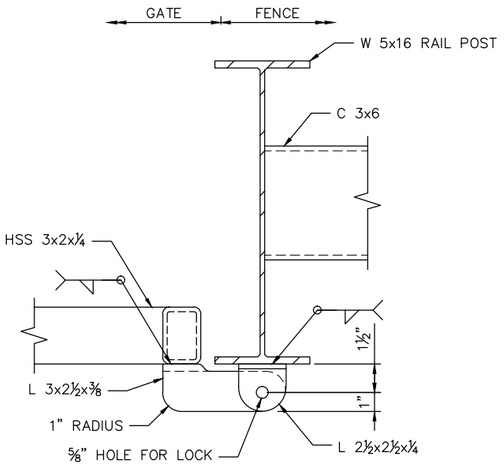

DETAIL B–B
GATE LOCK PLAN

NO.	DATE	BY	CHECK	DESIGN	REVISION / SUBMITTAL

DESIGNED BY: JCW | CHECKED BY: SAD
DRAWN BY: JIK | CHECKED BY: SAD

AECOM Kimley»Horn

90% SUBMISSION - 01/22/16

METROPOLITAN COUNCIL

SOUTHWEST Green Line LRT Extension

CIVIL - VOLUME 4F
CSAH 2 (PENN AVE S) (BRIDGE 27758)
SUPERSTRUCTURE MODIFICATIONS
GATE DETAILS

DISCIPLINE: STRUCTURES
SHEET NAME: CBR27758-BRM-DTL-004

SHEET 7 OF 12

Jan, 12 2016 02:11 pm V:\3400_ADC\CAD\SEGMENT E4\PLAN SHEETS\STRUCTURES\BR27758 MOD\CBR27758-BRM-DTL-004.dwg By: James.Debrow

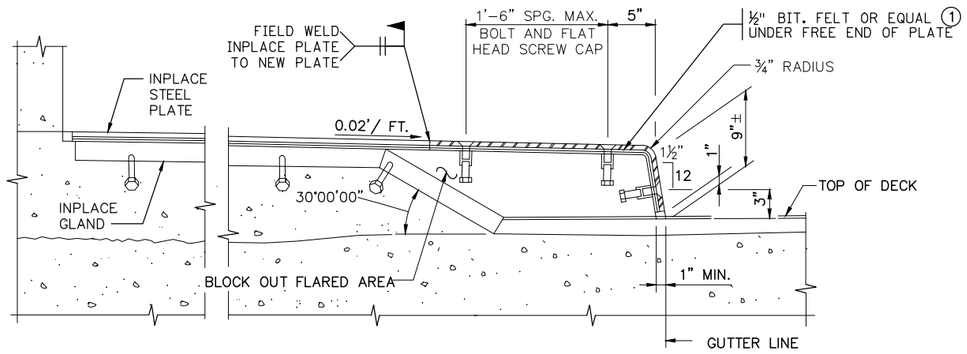

SECTION THROUGH RAISED SIDEWALK – OPTION 1

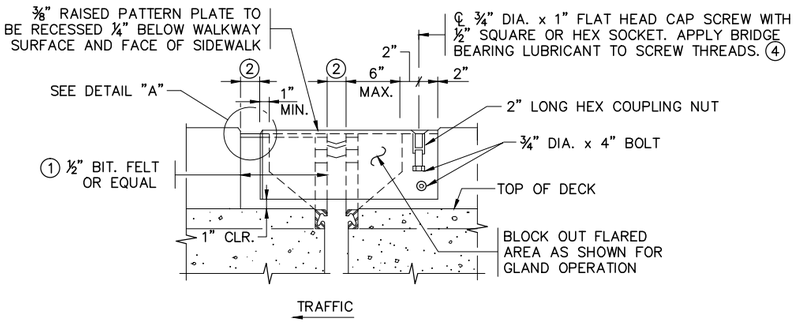

ELEVATION

RAISED SIDEWALK DETAILS

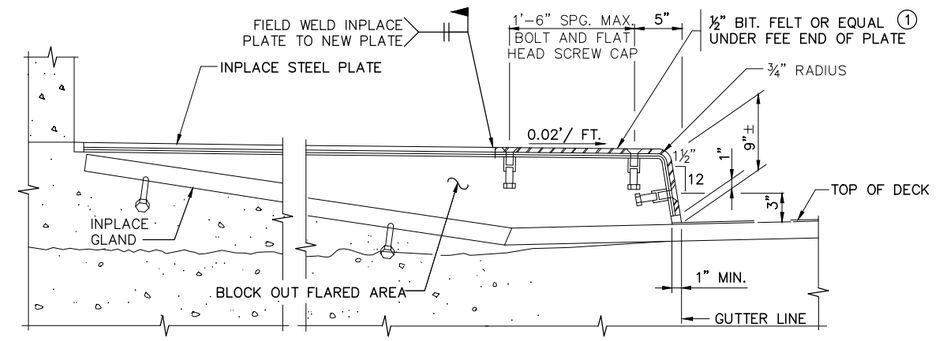

SECTION THROUGH RAISED SIDEWALK – OPTION 2

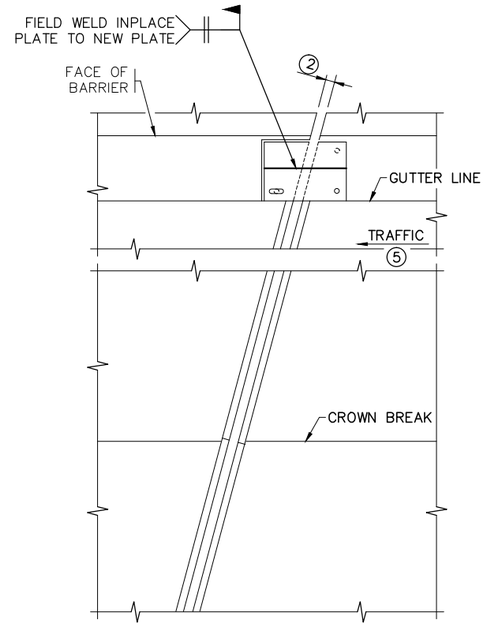

PLAN VIEW @ EXPANSION DEVICE

WITH STRAIGHT DEVICE

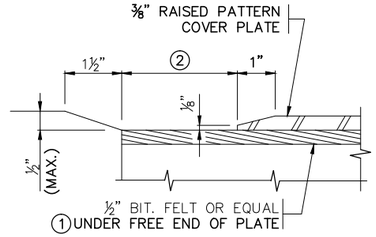

DETAIL "A"

GENERAL NOTES

¾" DIA. X 1" FLAT HEAD CAP SCREW WITH ½" SQUARE OR HEX SOCKET PER SPEC 3391. CAP SCREWS SHALL BE COUNTERSUNK 1/16" BELOW TOP OF PLATE. APPLY BRIDGE BEARING LUBRICANT TO SCREW THREADS. (4)

GALVANIZE STRUCTURAL STEEL AFTER FABRICATION AS PER SPEC. 3394. GALVANIZE FASTENERS AS PER SPEC. 3392.

STRUCTURAL STEEL SHALL COMPLY WITH SPEC. 3306 OR SPEC. 3309.

(1) USE LARGEST SINGLE PIECE POSSIBLE. USE OF SMALL PIECES OR SCRAPS SECURED TOGETHER IS PROHIBITED.

(2) 2" AT ALL TEMPS.

(3) ⅛" (¼" MAX.).

(4) LUBRICANT PER MnDOT APPROVED/QUALIFIED PRODUCTS LIST: BRIDGE – BRIDGE BEARING LUBRICANT.

(5) SEE SHEET NO. 1 FOR DIRECTION OF TRAFFIC.

NO.	DATE	BY	CHECK	DESIGN	REVISION / SUBMITTAL

DESIGNED BY: JCW CHECKED BY: SAD

DRAWN BY: JIK CHECKED BY: SAD

AECOM Kimley»Horn

90% SUBMISSION - 01/22/16

METROPOLITAN COUNCIL

SOUTHWEST Green Line LRT Extension

CIVIL - VOLUME 4F
CSAH 2 (PENN AVE S) (BRIDGE 27758)
SUPERSTRUCTURE MODIFICATIONS
SIDEWALK MODIFICATION DETAILS

DISCIPLINE: STRUCTURES

SHEET NAME: CBR27758-BRM-DTL-005

SHEET 8 OF 12

Jan, 12 2016 02:12 pm V:\3400_ADC\CAD\SEGMENT E4\PLAN SHEETS\STRUCTURES\BR27758 MOD\CBR27758-BRM-DTL-005.dwg By: James.Debrow

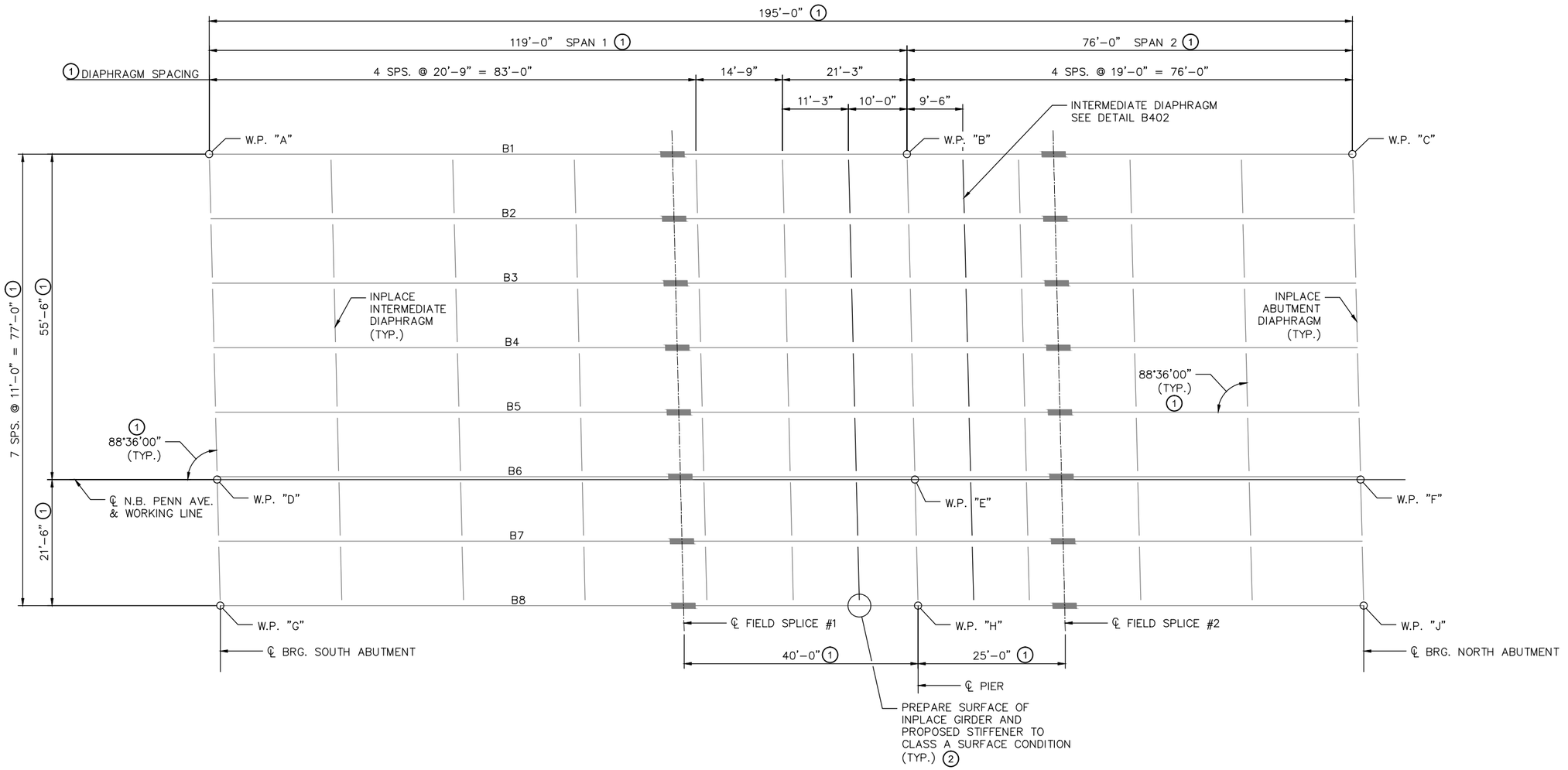

FRAMING PLAN

GRAPHIC SCALE IN FEET
0 5 10 20

NOTES:

(1) PER ORIGINAL BRIDGE PLAN DATED 4-18-86.

(2) CLASS A SURFACE DEFINED AS A BLAST CLEANED SURFACE.

ALL DIAPHRAGMS ARE PARALLEL TO SUBSTRUCTURE.

NO.	DATE	BY	CHECK	DESIGN	REVISION / SUBMITTAL

DESIGNED BY: JCW CHECKED BY: SAD
DRAWN BY: JIK CHECKED BY: SAD

AECOM Kimley»Horn

90% SUBMISSION - 01/22/16

METROPOLITAN COUNCIL

SOUTHWEST Green Line LRT Extension

CIVIL - VOLUME 4F
CSAH 2 (PENN AVE S) (BRIDGE 27758)
SUPERSTRUCTURE MODIFICATIONS
FRAMING PLAN

DISCIPLINE: STRUCTURES

SHEET NAME: CBR27758-BRM-SUP-001

SHEET 9 OF 12

Jan, 12 2016 02:12 pm v:\3400_ADC\CAD\SEGMENT E4\PLAN SHEETS\STRUCTURES\BR27758 MOD\CBR27758-BRM-SUP-001.dwg By: James.Debrow

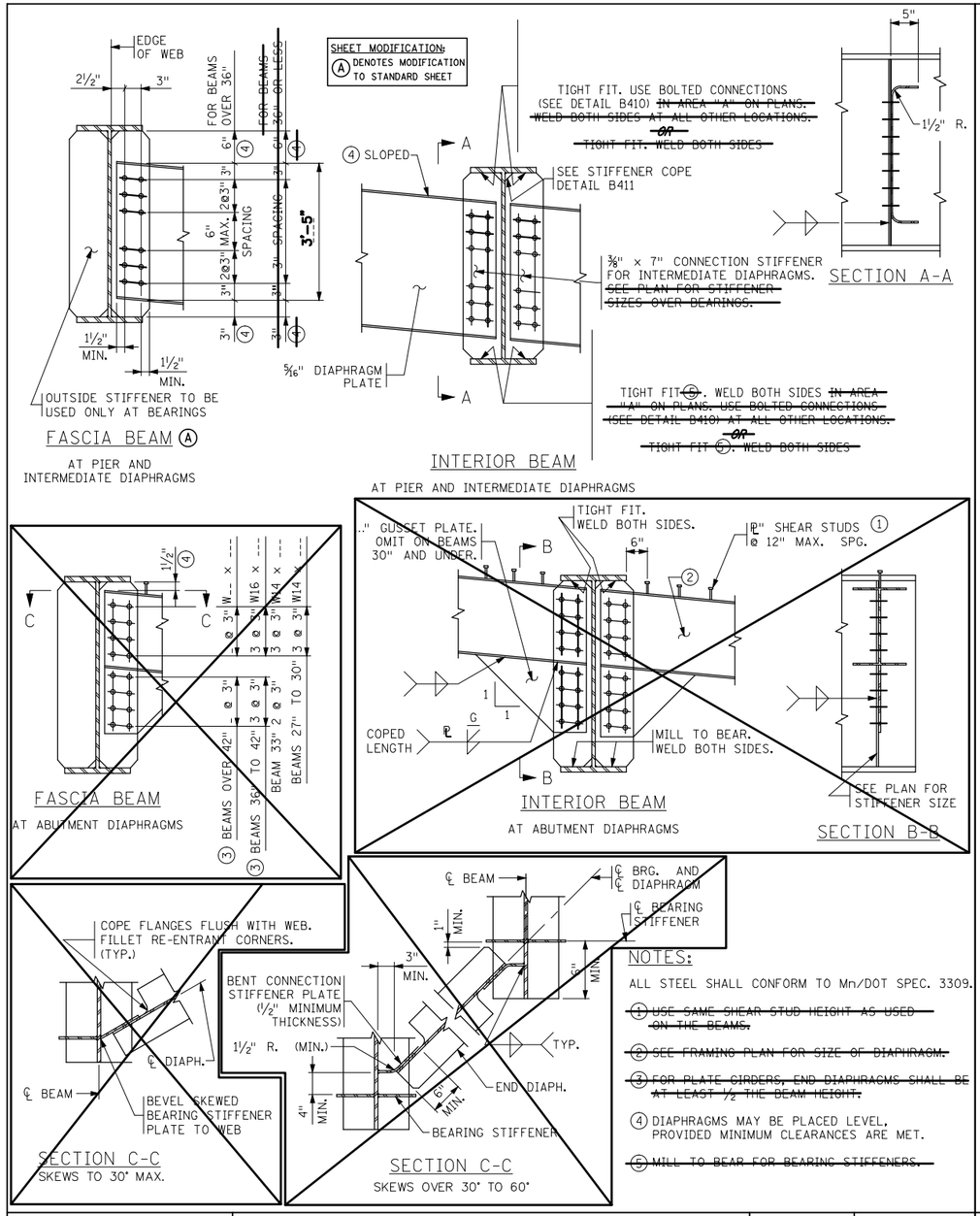

APPROVED: MARCH 26, 2009	STATE OF MINNESOTA DEPARTMENT OF TRANSPORTATION	REVISED	DETAIL NO.
Daniel J. Worgan STATE BRIDGE ENGINEER	BOLTED DIAPHRAGMS (FOR STEEL BEAMS)		B402 (MOD.)

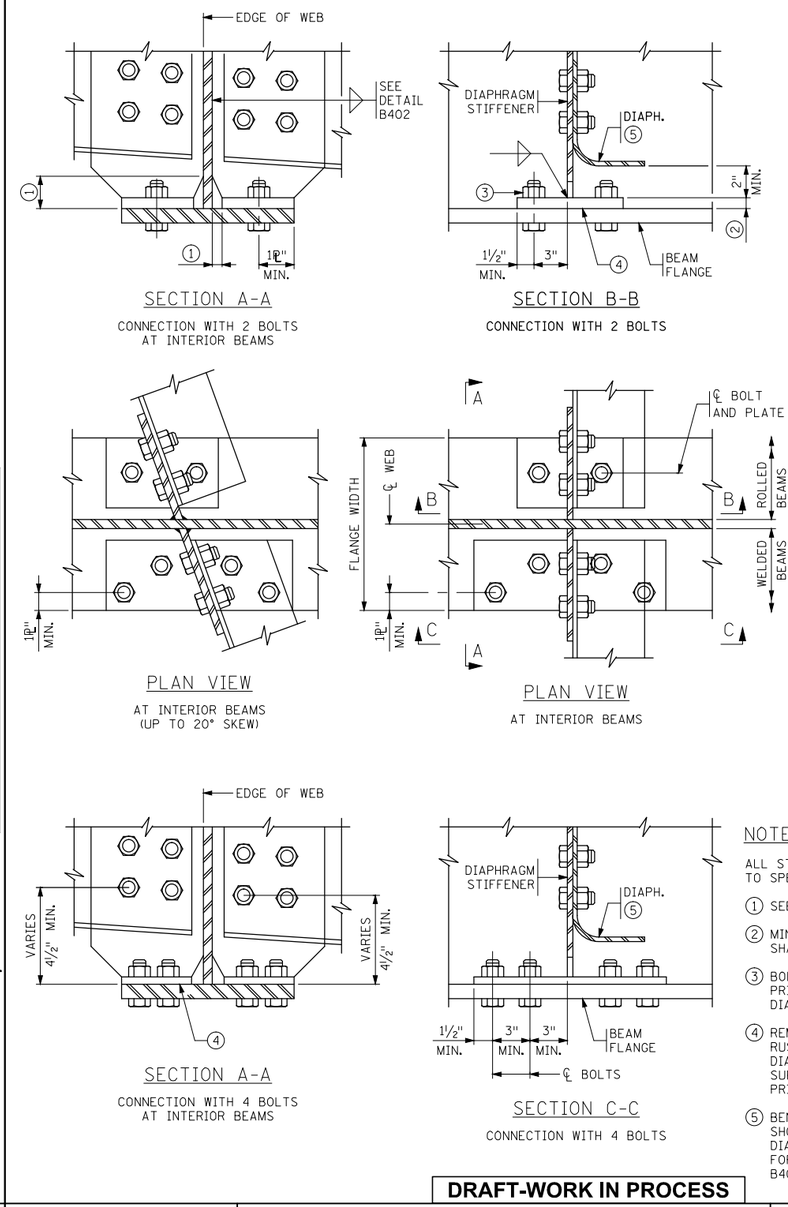

NOTES:

ALL STEEL SHALL CONFORM TO SPEC. 3309.

1. SEE DETAIL B411.
2. MINIMUM PLATE THICKNESS SHALL BE ¾".
3. BOLT PLATE TO BEAM FLANGE PRIOR TO WELDING PLATE TO DIAPHRAGM STIFFENER.
4. REMOVE LOOSE SCALE AND RUST FROM CONTACT AREA AT DIAPHRAGM CONNECTION. SURFACE MUST BE FLAT AND PRIMED.
5. BENT PLATE DIAPHRAGMS SHOWN. FOR CROSS FRAME DIAPHRAGM SEE DETAIL B407 FOR STRAIGHT BEAMS AND DETAIL B408 FOR CURVED BEAMS.

DRAFT-WORK IN PROCESS

APPROVED: NOVEMBER 22, 2002	STATE OF MINNESOTA DEPARTMENT OF TRANSPORTATION	REVISED	DETAIL NO.
Daniel J. Worgan STATE BRIDGE ENGINEER	BOLTED FLANGE TO STIFFENER DETAIL	09-11-2004 10-28-2008 05-24-2012	B410

NO.	DATE	BY	CHECK	DESIGN	REVISION / SUBMITTAL

DESIGNED BY: JCW CHECKED BY: SAD
DRAWN BY: JIK CHECKED BY: SAD

AECOM Kimley»Horn

90% SUBMISSION - 01/22/16

METROPOLITAN COUNCIL

SOUTHWEST Green Line LRT Extension

CIVIL - VOLUME 4F
CSAH 2 (PENN AVE S) (BRIDGE 27758)
SUPERSTRUCTURE MODIFICATIONS
STIFFENER DETAILS 1

DISCIPLINE: STRUCTURES
SHEET NAME: CBR27758-BRM-DTL-006

SHEET 10 OF 12

Jan. 12 2016 02:13 pm V:\3400_ADC\CAD\SEGMENT E4\PLAN SHEETS\STRUCTURES\BR27758 MOD\CBR27758-BRM-DTL-006.dwg By: James.Debrow

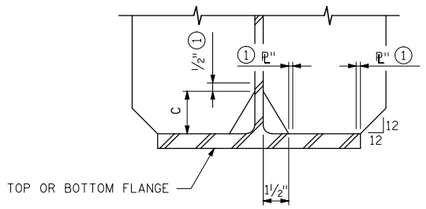

STIFFENER TO FLANGE CONNECTION
OPTION 1

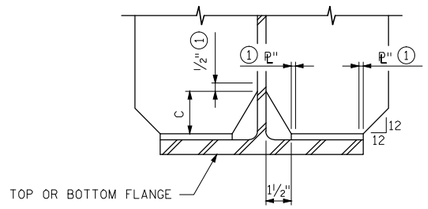

STIFFENER TO TAB PLATE CONNECTION
OPTION 1

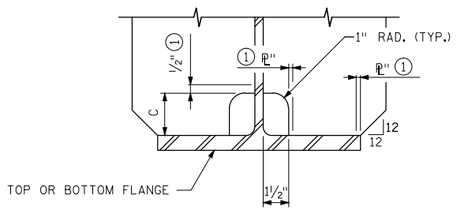

STIFFENER TO FLANGE CONNECTION
OPTION 2

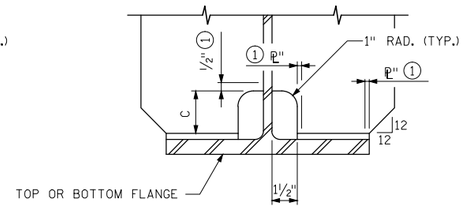

STIFFENER TO TAB PLATE CONNECTION
OPTION 2

STIFFENER COPE DETAIL

PLATE GIRDER OR ROLLED BEAM

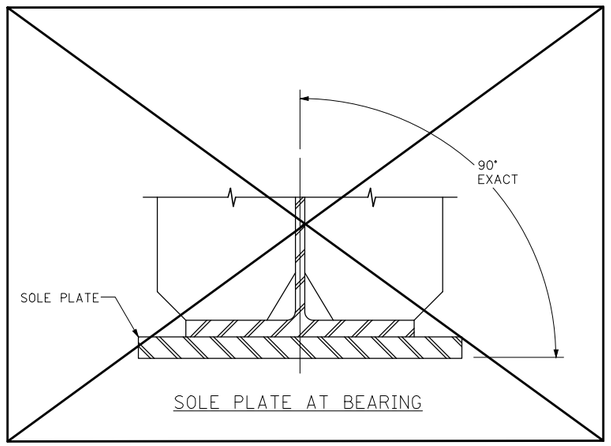

SOLE PLATE AT BEARING

WEB THICKNESS	DIMENSION C
½", ℄", ℄"	2½"
11/16", ℄"	3"

NOTES:

(1) DO NOT WELD IN THIS AREA.
SEE B410 FOR CONNECTION DETAILS.

APPROVED: OCTOBER 22, 2008	STATE OF MINNESOTA DEPARTMENT OF TRANSPORTATION	REVISION	DETAIL NO.
Daniel S. Hougen STATE BRIDGE ENGINEER	STIFFENER DETAILS (FOR STEEL BEAMS)		B411 (MOD.)

NO.	DATE	BY	CHECK	DESIGN	REVISION / SUBMITTAL

DESIGNED BY: JCW CHECKED BY: SAD
DRAWN BY: JIK CHECKED BY: SAD

AECOM Kimley»Horn

90% SUBMISSION - 01/22/16

METROPOLITAN COUNCIL

SOUTHWEST Green Line LRT Extension

CIVIL - VOLUME 4F
CSAH 2 (PENN AVE S) (BRIDGE 27758)
SUPERSTRUCTURE MODIFICATIONS
STIFFENER DETAILS 2

DISCIPLINE: STRUCTURES
SHEET NAME: CBR27758-BRM-DTL-007

SHEET 11 OF 12

Jan. 12 2016 02:13 pm V:\3400_ADC\CAD\SEGMENT E4\PLAN SHEETS\STRUCTURES\BR27758 MOD\CBR27758-BRM-DTL-007.dwg By: James.Debrow

CONCRETE WEARING COURSE

☐ LOW SLUMP

☐ OTHER _____
TYPE OR MANUFACTURER

EXPANSION JOINTS

JOINT MANUFACTURER

MANUFACTURER'S IDENTIFICATION _____
MFR'S No. AND/OR LETTER DESIGNATION FOR JOINT USED

GLAND MANUFACTURER _____
NAME AND ADDRESS (CITY, STATE)

SIZE OF GLAND _____

MANUFACTURER'S IDENTIFICATION _____
MFR'S No. AND/OR LETTER DESIGNATION FOR GLAND USED

ELASTOMERIC BEARING PADS

PAD MANUFACTURER _____
NAME AND ADDRESS (CITY, STATE)

SPECIAL SURFACE FINISH

SYSTEM: _____ COLOR: _____

FINISHING ROADWAY FACES OF BARRIER RAILING

TYPE: _____ COLOR: _____

ANTI-GRAFFITI COATING

MANUFACTURER _____
NAME AND ADDRESS (CITY, STATE)

PRODUCT NAME: _____ LOCATION: _____

PAINT SYSTEM

Mn/DOT SPECIFICATION NUMBER _____
2478 OR 2479 OR OTHER

MANUFACTURER _____
NAME AND ADDRESS (CITY, STATE)

PRIME COAT _____
Mn/DOT MATERIAL SPECIFICATION NUMBER

INTERMEDIATE COAT _____
Mn/DOT MATERIAL SPECIFICATION NUMBER

FINISH COAT _____ _____
Mn/DOT MATERIAL SPECIFICATION NUMBER COLOR

PLAN QUALITY

RATE 1 (AGREE), 2 (NEUTRAL), OR 3 (DISAGREE, PLEASE COMMENT BELOW)

DIMENSIONING AND DETAILING ADEQUATELY DESCRIBED REQUIRED CONSTRUCTION. _____
BAR LISTS AND QUANTITIES WERE TYPICALLY COMPLETE AND FREE OF ERRORS. _____
SCALE OF DRAWINGS AND OVERALL LEGIBILITY OF LINES AND TEXT WAS GOOD. _____
(SB) SPECIAL PROVISIONS ADEQUATELY DESCRIBED SPECIAL WORK AND PAYMENT. _____

COMMENTS: _____

NUMBER OF BRIDGE
SUPPLEMENTAL AGREEMENTS: _____ COST: $ _____

LIST SIGNIFICANT ERRORS OR OMISSIONS IN PLAN DETAILS OR PAY QUANTITIES IN THE SPACE PROVIDED AT RIGHT.

BRIDGE REMOVAL / BRIDGE OPENING

NUMBER OF AND DATE OLD BRIDGE WAS REMOVED (IF APPLICABLE):

BRIDGE NUMBER _____ DATE REMOVED _____

DATE NEW BRIDGE WAS OPENED TO TRAFFIC _____

NOTIFY THE BRIDGE OFFICE BRIDGE MANAGEMENT UNIT WITH THIS INFORMATION AS SOON AS POSSIBLE. (651) 366-4557

OTHER ITEMS ①

① UTILITIES ADDED DURING CONSTRUCTION AND SPECIALTY ITEMS.

FINAL QUANTITIES ENTERED ON SCHEDULE OF QUANTITIES: YES ☐ NO ☐

SUMMARY OF SIGNIFICANT AS-BUILT CHANGES

THE AS-BUILT INFORMATION WAS ADDED TO THE PLAN BY:

_____ _____
INSPECTOR(S) SIGNATURE DATE

CHECKED BY: _____ _____
PROJECT ENGINEER/SUPERVISOR SIGNATURE DATE

AT THE TIME OF THE FINAL, THIS COMPLETED AS-BUILT BRIDGE DATA SHEET MUST BE SUBMITTED TO THE BRIDGE OFFICE - ATTN: REGIONAL CONSTRUCTION ENGINEER (MS610).

REVISION: 10-28-2008

APPROVED: SEPTEMBER 26, 2003
Daniel L Hanson
STATE BRIDGE ENGINEER

AS-BUILT DETAILS
(AS NEEDED)

FIG. 5-397.900

TITLE:	DES:	DR:	APPROVED:	BRIDGE NO.
AS-BUILT BRIDGE DATA	CHK:	CHK:		27758
	SHEET NO. 12 OF 12 SHEETS			

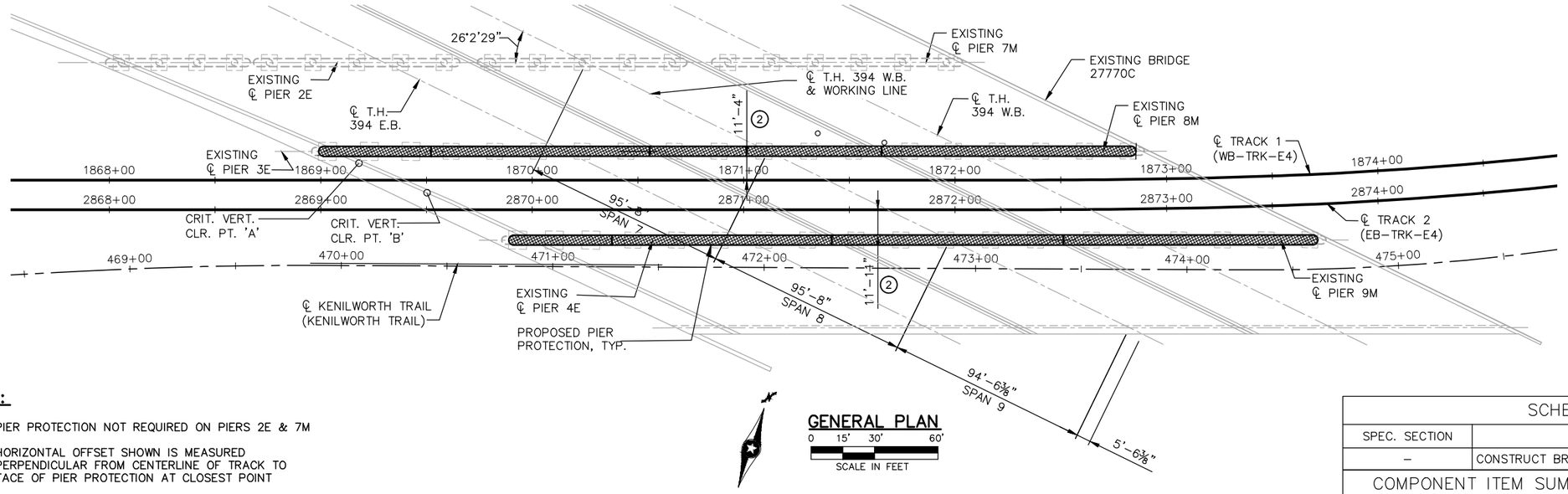

GENERAL PLAN

0 15' 30' 60'

SCALE IN FEET

NOTES:

1. PIER PROTECTION NOT REQUIRED ON PIERS 2E & 7M
2. HORIZONTAL OFFSET SHOWN IS MEASURED PERPENDICULAR FROM CENTERLINE OF TRACK TO FACE OF PIER PROTECTION AT CLOSEST POINT

PROPOSED PIER PROTECTION

FOR AESTHETIC DETAILS REFER TO SHEETS 22 & 23

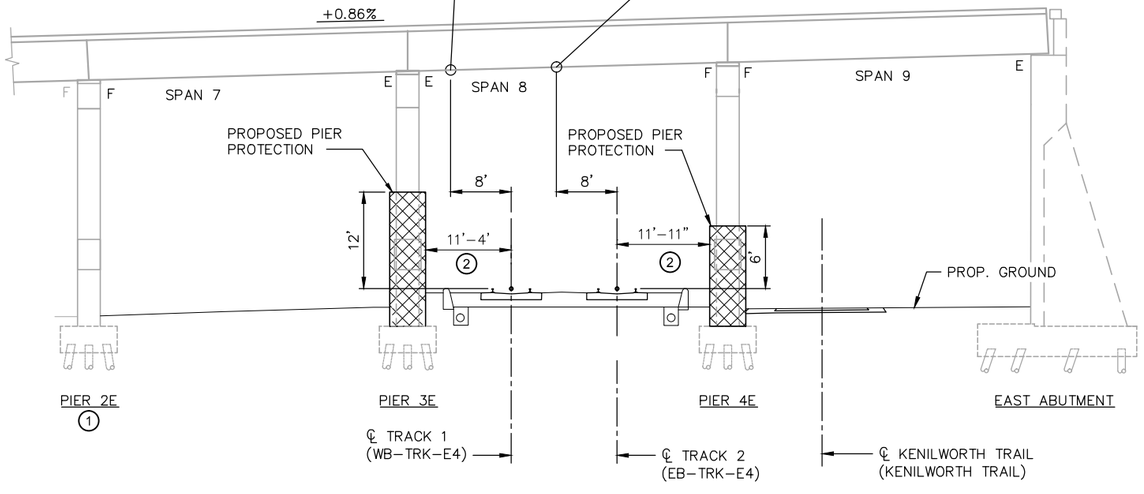

GENERAL ELEVATION

0 5' 10' 20'

SCALE IN FEET

DESIGN DATA

AASHTO LRFD BRIDGE DESIGN SPECIFICATIONS, 7TH EDITION, 2014 WITH 2015 INTERIM REVISIONS.

2014 AREMA MANUAL FOR RAILWAY ENGINEERING

LOAD AND RESISTANCE FACTOR DESIGN METHOD

SOUTHWEST LIGHT RAIL TRANSIT DESIGN CRITERIA (REVISION 4.0)

RAILWAY COLLISION LOAD = 600 KIP

MATERIAL DESIGN PROPERTIES:
REINFORCED CONCRETE:
f'c = 4000 PSI n = 8
fy = 60000 PSI REINFORCEMENT

ALL REINFORCEMENT STEEL TO BE EPOXY COATED

LIST OF SHEETS

NO.	DESCRIPTION
1	GENERAL PLAN AND ELEVATION
2–9	DETAILS 1 THRU 8
10–21	REINFORCEMENT 1 THRU 12
22–23	AESTHETIC DETAILS

SCHEDULE OF QUANTITIES

SPEC. SECTION	ITEM	UNIT	QUANTITY
–	CONSTRUCT BRIDGE 27770C PIER PROTECTION	LUMP SUM	LS

COMPONENT ITEM SUMMARY (BR. 27770C PIER PROTECTION)

SPEC. SECTION (2)	COMPONENT ITEM	UNIT (1)	QUANTITY (1)
2401	STRUCTURAL CONCRETE (3B52)	CU YD	
2401	REINFORCEMENT BARS (EPOXY COATED)	POUND	
2411	ARCHITECTURAL CONCRETE TEXTURE	SQ FT	
2451	STRUCTURE EXCAVATION CLASS U	CU YD	
2433	ANCHORAGE, TYPE REINF. BARS	EACH	

(1) QUANTITIES LISTED FOR THE COMPONENT ITEMS OF THE LUMP SUM CONSTRUCT BR 27770C PIER PROTECTION ITEM ARE FOR INFORMATION PURPOSES. ANY ADDITIONAL ITEMS OR CHANGES IN QUANTITIES REQUIRED SHALL BE PROVIDED BY THE CONTRACTOR WITH NO ADDITIONAL COMPENSATION.

(2) MEASUREMENT AND PAYMENT FOR COMPONENT ITEMS SHALL BE PART OF THE LUMP SUM PAYMENT FOR CONSTRUCT BR 27770C PIER PROTECTION. REFER TO MNDOT STANDARD SPECIFICATION OR SPECIAL PROVISION FOR TECHNICAL SPECIFICATION REQUIREMENTS FOR ALL PROVISIONS OTHER THAN MEASUREMENT & PAYMENT REQUIREMENTS.

CONSTRUCTION NOTES

THE 2016 EDITION OF THE MINNESOTA DEPARTMENT OF TRANSPORTATION "STANDARD SPECIFICATIONS FOR CONSTRUCTION" SHALL GOVERN.

THE BAR SIZES SHOWN IN THIS PLAN ARE IN U.S. CUSTOMARY DESIGNATIONS. THE FIRST DIGIT OR THE FIRST TWO DIGITS OF EACH BAR MARK INDICATE THE BAR SIZE.

BARS MARKED WITH THE SUFFIX "E" SHALL BE EPOXY COATED IN ACCORDANCE WITH SPEC. 3301.

CONTRACTOR SHALL FIELD VERIFY INPLACE BRIDGE ELEVATIONS AND DIMENSIONS.

BRIDGE NO. 27770C

T.H. 394 AND RAMPS OVER BNSF RR, SOUTHWEST LRT, AND CEDAR LAKE TRAIL. 1.7 MILES EAST OF JCT. T.H. 100 AND T.H. 394.

CAST IN PLACE CONCRETE PIER PROTECTION BARRIER SUPPORTED ON EXISTING FOUNDATION AT PIERS 3E, 4E, 8M AND 9M.

BRIDGE I.D. NO. 501

GENERAL PLAN AND ELEVATION

SEC 28 T 29N R 24W
CITY OF MINNEAPOLIS HENNEPIN COUNTY

JOB NO. T9N635 | STATE PROJECT NO. 9909–01 | MNDOT REVIEW: JOE NIETFELD

NO.	DATE	BY	CHECK	DESIGN	REVISION / SUBMITTAL

DESIGNED BY: AMC CHECKED BY: LKZ
DRAWN BY: EBM CHECKED BY: LKZ

AECOM Kimley»Horn

90% SUBMISSION - 01/22/16

METROPOLITAN COUNCIL

SOUTHWEST Green Line LRT Extension

CIVIL - VOLUME 4F
TH 394 (BRIDGE 27770C)
PIER PROTECTION
GENERAL PLAN AND ELEVATION

DISCIPLINE: STRUCTURES

SHEET NAME: EX4-STU-PPR-T394-VEH-GPE-001

SHEET 1 OF 23

Jan, 12 2016 04:17 pm V:\3400_ADC\CAD\SEGMENT E4\PLAN SHEETS\STRUCTURES\PIER PROTECTION\EX4-STU-PPR-T394-VEH-DTL.dwg By: Edgar.McKoy

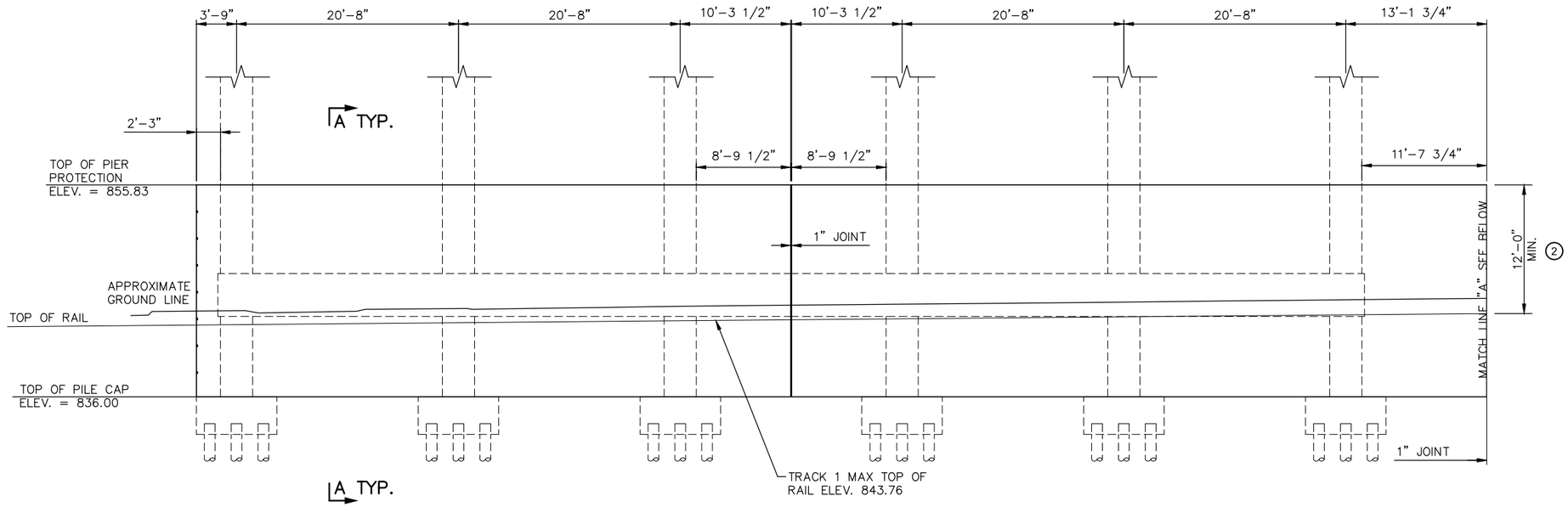

PARTIAL ELEVATION – PIER 8M NORTH (1)

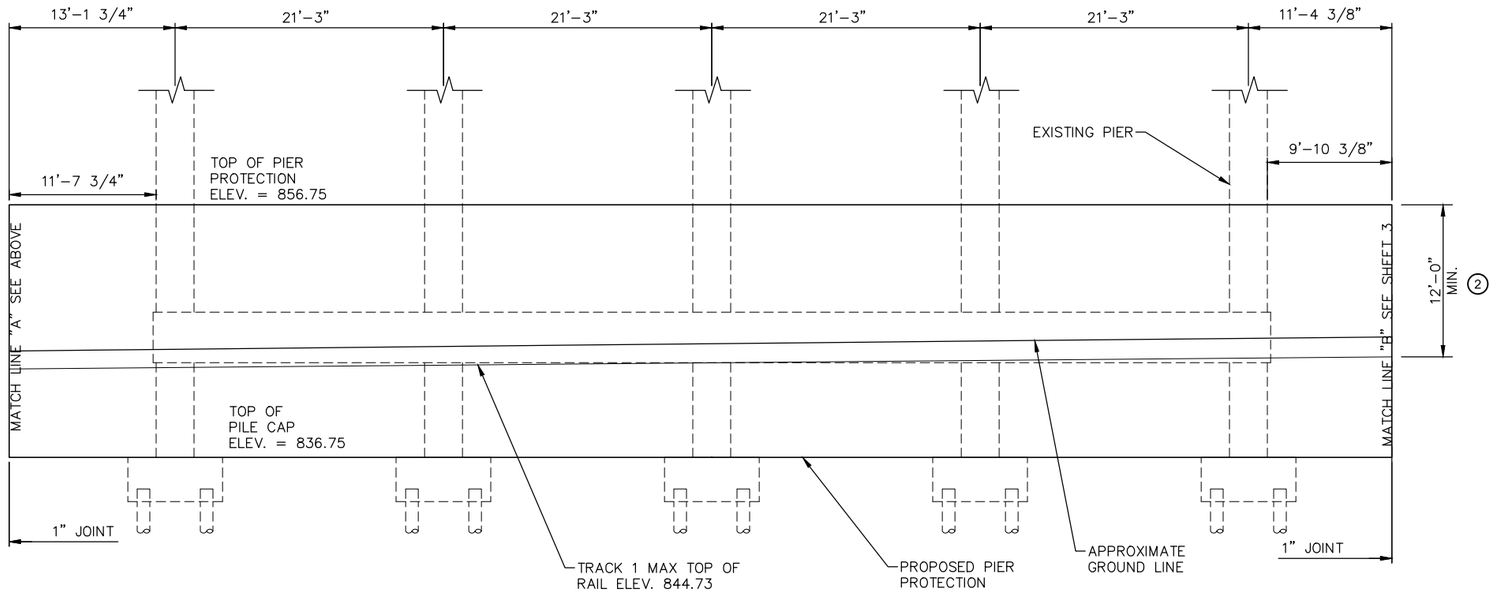

PARTIAL ELEVATION – PIER 8M SOUTH (1)

NOTES:

FOR AESTHETIC DETAILS REFER TO SHEET 22

FOR SECTION A–A REFER TO SHEET 5

(1) ELEVATION LOOKING SOUTH

(2) MINIMUM HEIGHT ABOVE TOP OF TRACK 1 MAXIMUM TOP OF RAIL ELEVATION

NO.	DATE	BY	CHECK	DESIGN	REVISION / SUBMITTAL

DESIGNED BY: AMC | CHECKED BY: LKZ
DRAWN BY: EBM | CHECKED BY: LKZ

AECOM Kimley»Horn

90% SUBMISSION - 01/22/16

METROPOLITAN COUNCIL

SOUTHWEST Green Line LRT Extension

CIVIL - VOLUME 4F
TH 394 (BRIDGE 27770C)
PIER PROTECTION DETAILS 1

DISCIPLINE: STRUCTURES

SHEET NAME: EX4-STU-PPR-T394-VEH-PIR-001

SHEET 2 OF 23

Jan, 12 2016 04:17 pm V:\3400_ADC\CAD\SEGMENT E4\PLAN SHEETS\STRUCTURES\PIER PROTECTION\EX4-STU-PPR-T394-VEH-DTL.dwg By: Edgar.McKoy

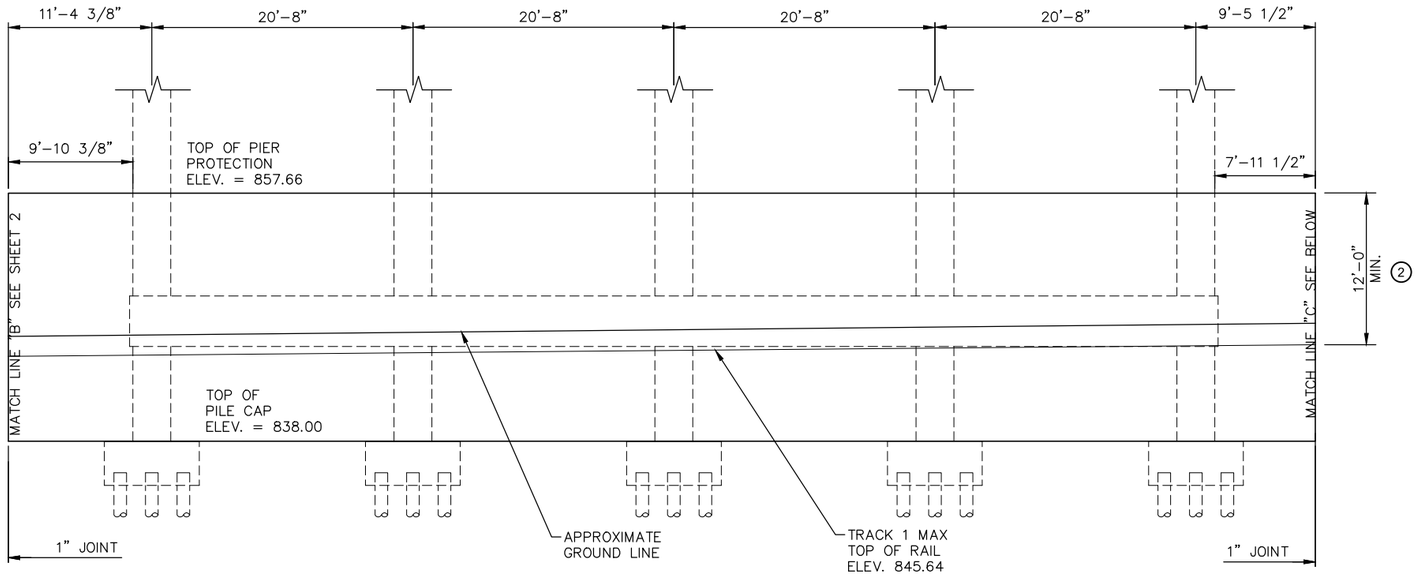

PARTIAL ELEVATION – PIER 3E NORTH (1)

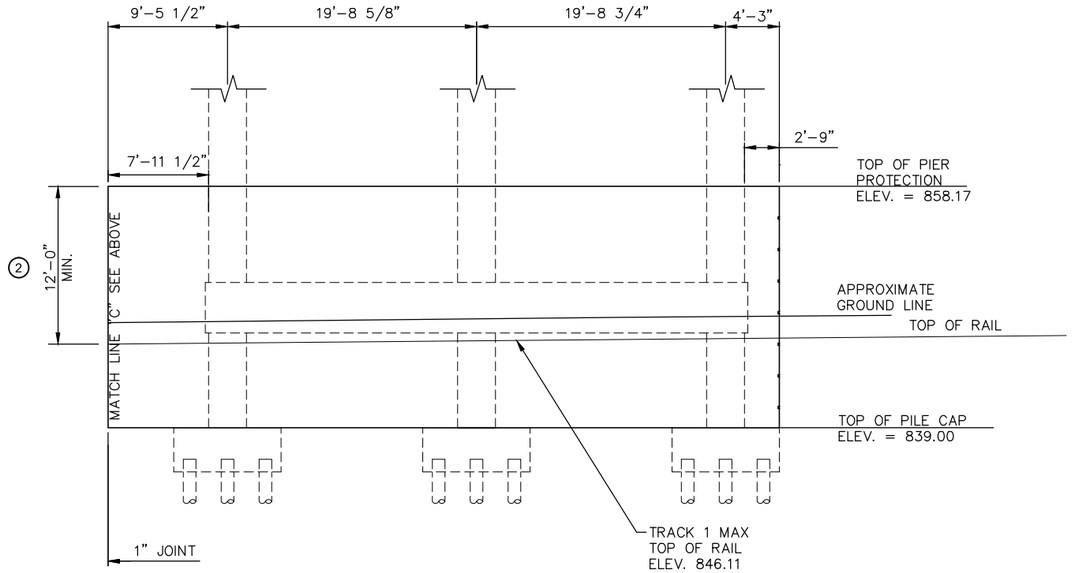

PARTIAL ELEVATION – PIER 3E SOUTH (1)

NOTES:

FOR AESTHETIC DETAILS REFER TO SHEET 22

(1) ELEVATION LOOKING SOUTH

(2) MINIMUM HEIGHT ABOVE TOP OF TRACK 1 MAXIMUM TOP OF RAIL ELEVATION

NO.	DATE	BY	CHECK	DESIGN	REVISION / SUBMITTAL

DESIGNED BY: AMC | CHECKED BY: LKZ
DRAWN BY: EBM | CHECKED BY: LKZ

AECOM Kimley»Horn

90% SUBMISSION - 01/22/16

METROPOLITAN COUNCIL

SOUTHWEST Green Line LRT Extension

CIVIL - VOLUME 4F
TH 394 (BRIDGE 27770C)
PIER PROTECTION
DETAILS 2

DISCIPLINE: STRUCTURES

SHEET NAME: EX4-STU-PPR-T394-VEH-PIR-002

SHEET 3 OF 23

Jan, 12 2016 04:17 pm V:\3400_ADC\CAD\SEGMENT E4\PLAN SHEETS\STRUCTURES\PIER PROTECTION\EX4-STU-PPR-T394-VEH-DTL.dwg By: Edgar.McKoy

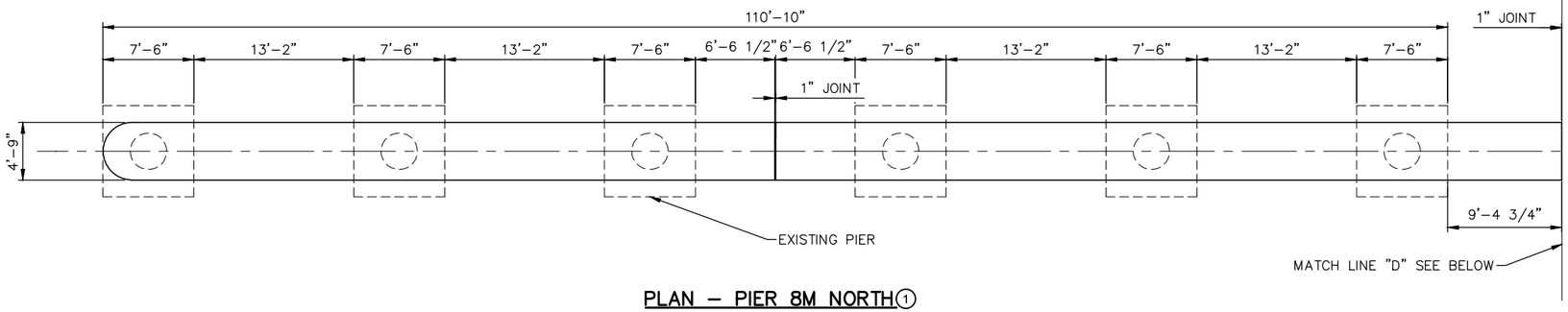

PLAN – PIER 8M NORTH①

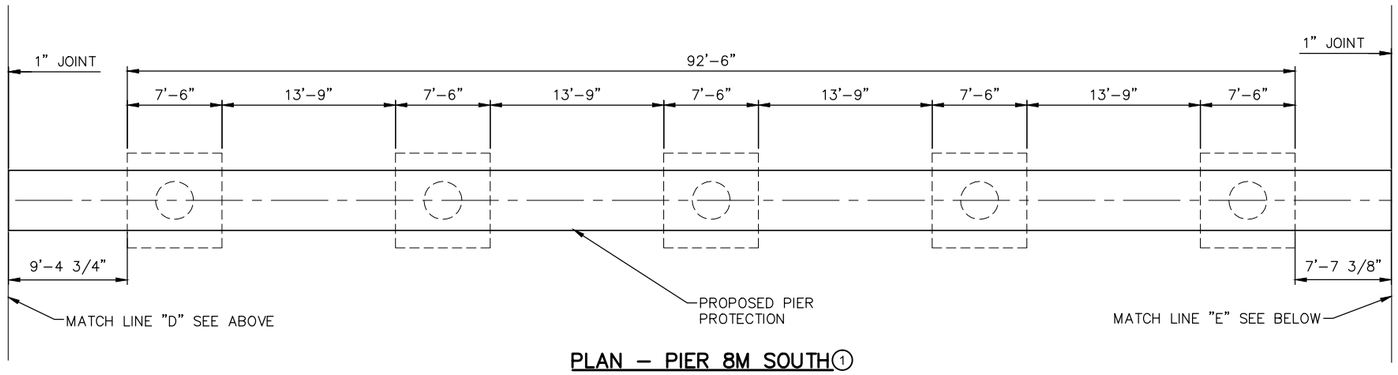

PLAN – PIER 8M SOUTH①

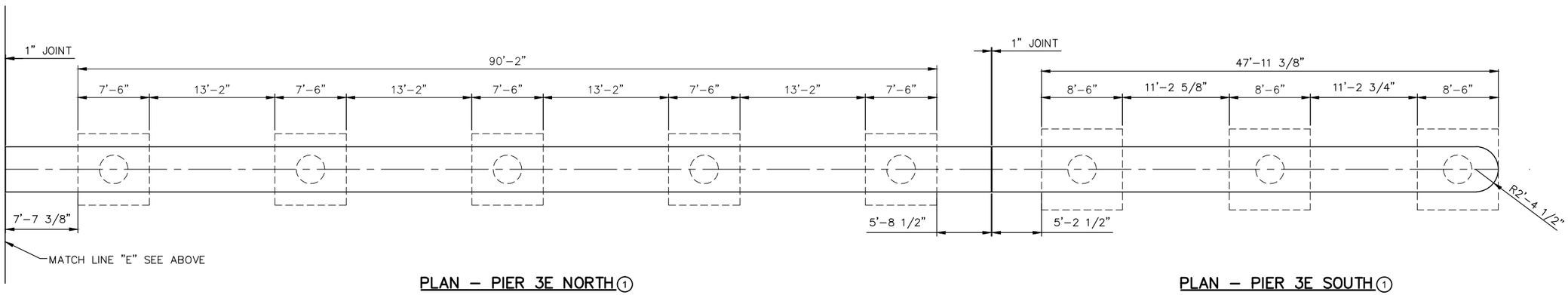

PLAN – PIER 3E NORTH①

PLAN – PIER 3E SOUTH①

NOTES:

FOR AESTHETIC DETAILS REFER TO SHEET 22

① EXISTING PILES NOT SHOWN

NO.	DATE	BY	CHECK	DESIGN	REVISION / SUBMITTAL

DESIGNED BY: AMC | CHECKED BY: LKZ
DRAWN BY: EBM | CHECKED BY: LKZ

AECOM Kimley»Horn

90% SUBMISSION - 01/22/16

METROPOLITAN COUNCIL

SOUTHWEST Green Line LRT Extension

CIVIL - VOLUME 4F
TH 394 (BRIDGE 27770C)
PIER PROTECTION
DETAILS 3

DISCIPLINE: STRUCTURES

SHEET NAME: EX4-STU-PPR-T394-VEH-PIR-003

SHEET 4 OF 23

Jan, 12 2016 04:17 pm V:\3400_ADC\CAD\SEGMENT E4\PLAN SHEETS\STRUCTURES\PIER PROTECTION\EX4-STU-PPR-T394-VEH-DTL.dwg By: Edgar.McKoy

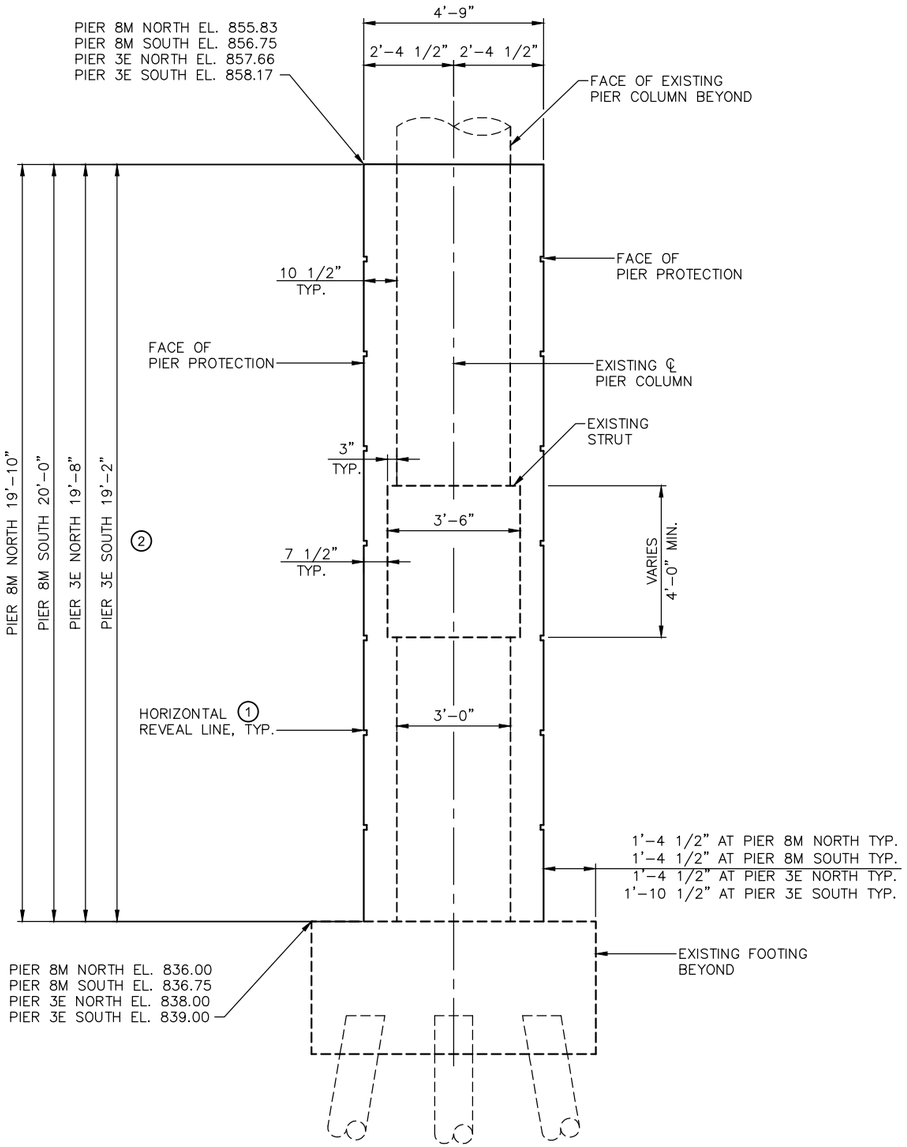

SECTION A–A TYP.

NOTES:

1. FOR AESTHETIC DETAILS REFER TO SHEET 22
2. STRUCTURAL CONCRETE (3B52)

NO.	DATE	BY	CHECK	DESIGN	REVISION / SUBMITTAL

DESIGNED BY: AMC | CHECKED BY: LKZ
DRAWN BY: EBM | CHECKED BY: LKZ

AECOM Kimley»Horn

90% SUBMISSION - 01/22/16

METROPOLITAN COUNCIL

SOUTHWEST Green Line LRT Extension

CIVIL - VOLUME 4F
TH 394 (BRIDGE 27770C)
PIER PROTECTION
DETAILS 4

DISCIPLINE: STRUCTURES

SHEET NAME: EX4-STU-PPR-T394-VEH-PIR-004

SHEET 5 OF 23

Jan, 12 2016 04:17 pm V:\3400_ADC\CAD\SEGMENT E4\PLAN SHEETS\STRUCTURES\PIER PROTECTION\EX4-STU-PPR-T394-VEH-DTL.dwg By: Edgar.McKoy

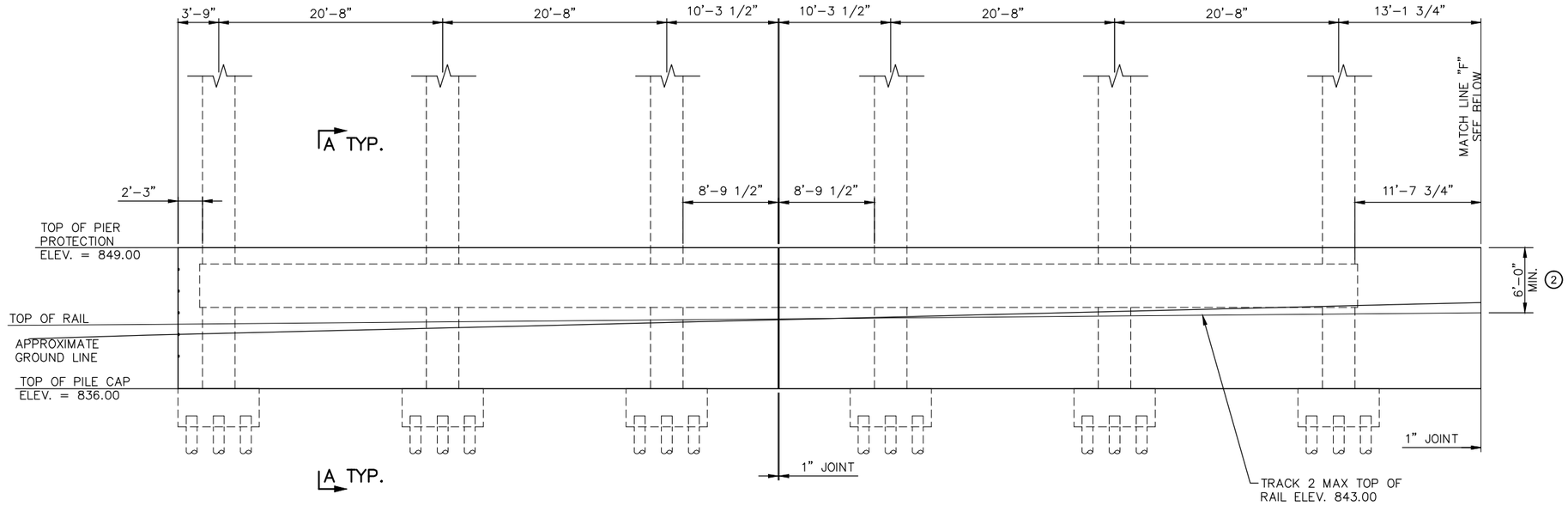

PARTIAL ELEVATION – PIER 9M NORTH (1)

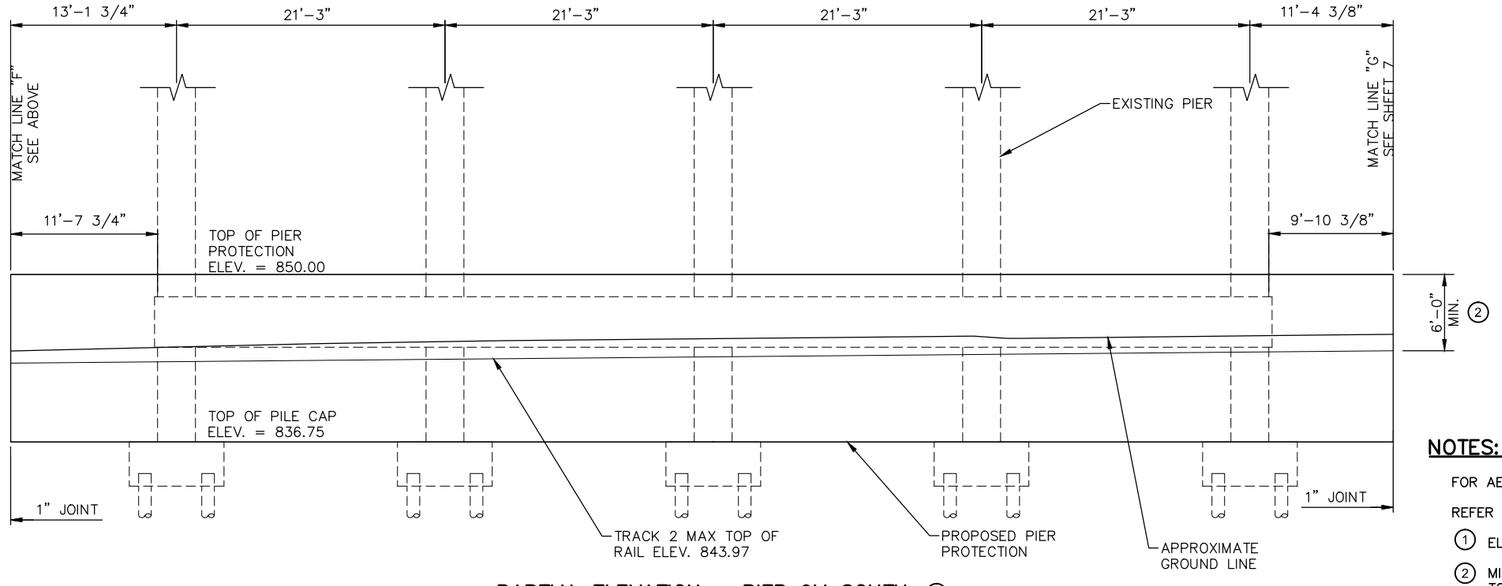

PARTIAL ELEVATION – PIER 9M SOUTH (1)

NOTES:

FOR AESTHETIC DETAILS REFER TO SHEET 23

REFER TO SHEET 9 FOR SECTION A–A

(1) ELEVATION LOOKING SOUTH

(2) MINIMUM HEIGHT ABOVE TOP OF TRACK 2 MAXIMUM TOP OF RAIL ELEVATION

NO.	DATE	BY	CHECK	DESIGN	REVISION / SUBMITTAL

DESIGNED BY: AMC | CHECKED BY: LKZ

DRAWN BY: EBM | CHECKED BY: LKZ

AECOM Kimley»Horn

90% SUBMISSION - 01/22/16

METROPOLITAN COUNCIL

SOUTHWEST Green Line LRT Extension

CIVIL - VOLUME 4F
TH 394 (BRIDGE 27770C)
PIER PROTECTION
DETAILS 5

DISCIPLINE: STRUCTURES

SHEET NAME: EX4-STU-PPR-T394-VEH-PIR-005

SHEET 6 OF 23

Jan, 12 2016 04:17 pm V:\3400_ADC\CAD\SEGMENT E4\PLAN SHEETS\STRUCTURES\PIER PROTECTION\EX4-STU-PPR-T394-VEH-DTL.dwg By: Edgar.McKoy

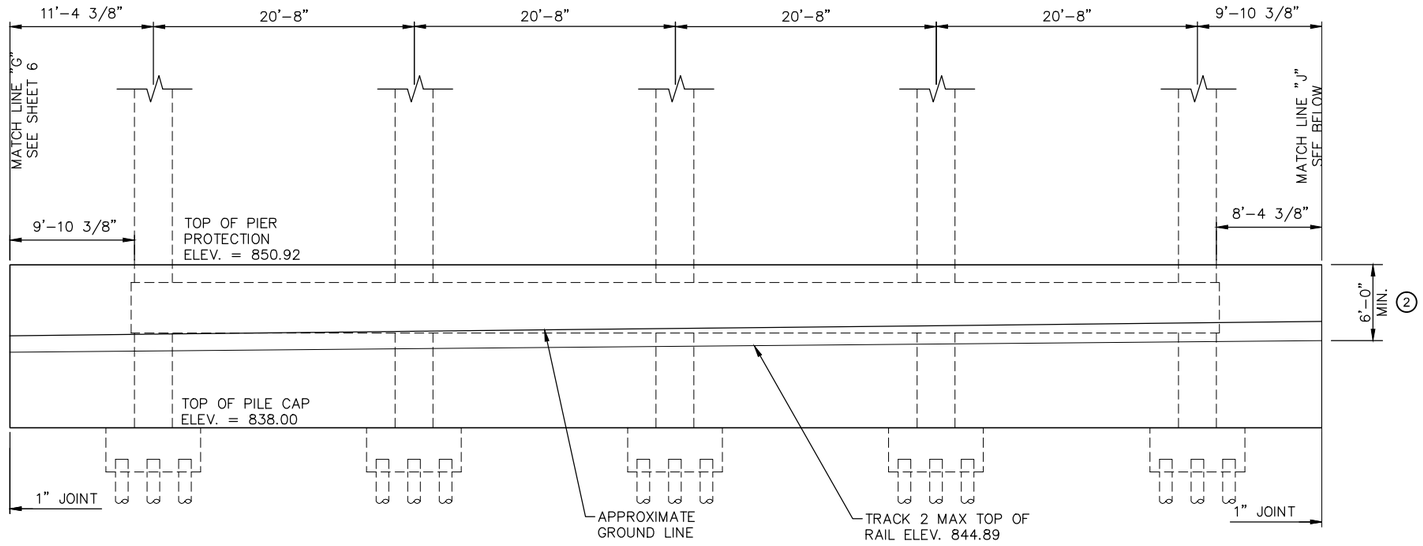

PARTIAL ELEVATION – PIER 4E NORTH (1)

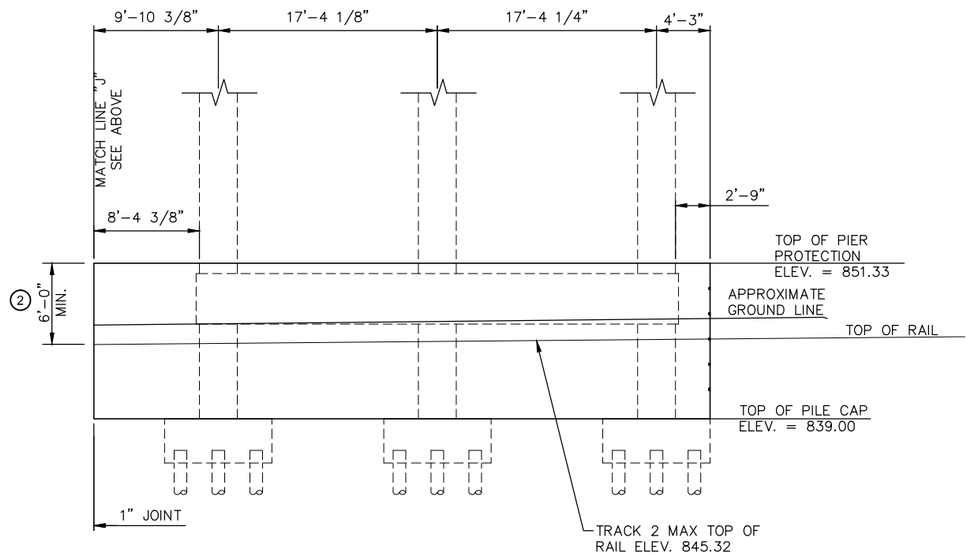

PARTIAL ELEVATION – PIER 4E SOUTH (1)

NOTES:

FOR AESTHETIC DETAILS REFER TO SHEET 23

(1) ELEVATION LOOKING SOUTH

(2) MINIMUM HEIGHT ABOVE TOP OF TRACK 2 MAXIMUM TOP OF RAIL ELEVATION

NO.	DATE	BY	CHECK	DESIGN	REVISION / SUBMITTAL

DESIGNED BY: AMC | CHECKED BY: LKZ
DRAWN BY: EBM | CHECKED BY: LKZ

AECOM Kimley»Horn

90% SUBMISSION - 01/22/16

METROPOLITAN COUNCIL

SOUTHWEST Green Line LRT Extension

CIVIL - VOLUME 4F
TH 394 (BRIDGE 27770C)
PIER PROTECTION
DETAILS 6

DISCIPLINE: STRUCTURES

SHEET NAME: EX4-STU-PPR-T394-VEH-PIR-006

SHEET 7 OF 23

Jan, 12 2016 04:17 pm V:\3400_ADC\CAD\SEGMENT E4\PLAN SHEETS\STRUCTURES\PIER PROTECTION\EX4-STU-PPR-T394-VEH-DTL.dwg By: Edgar.McKoy

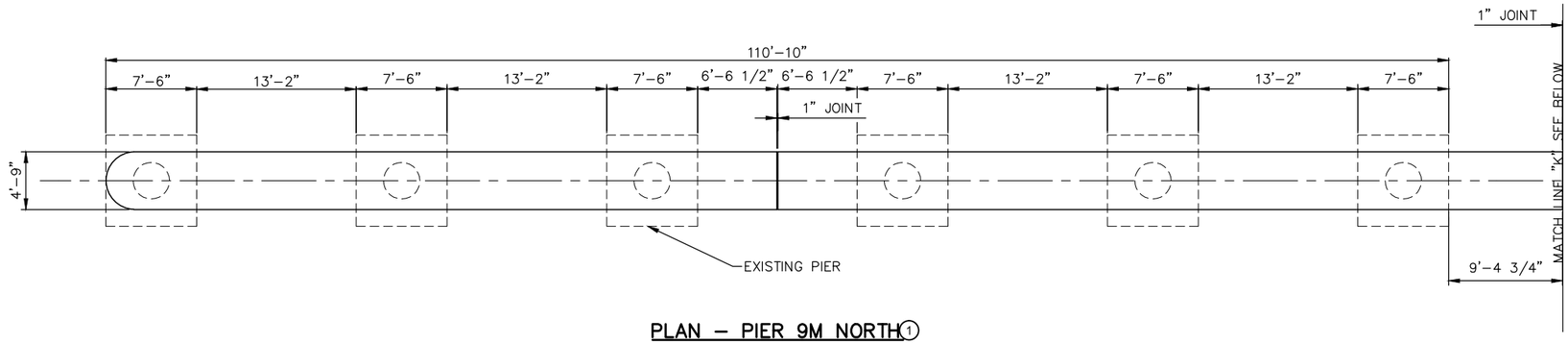

PLAN – PIER 9M NORTH (1)

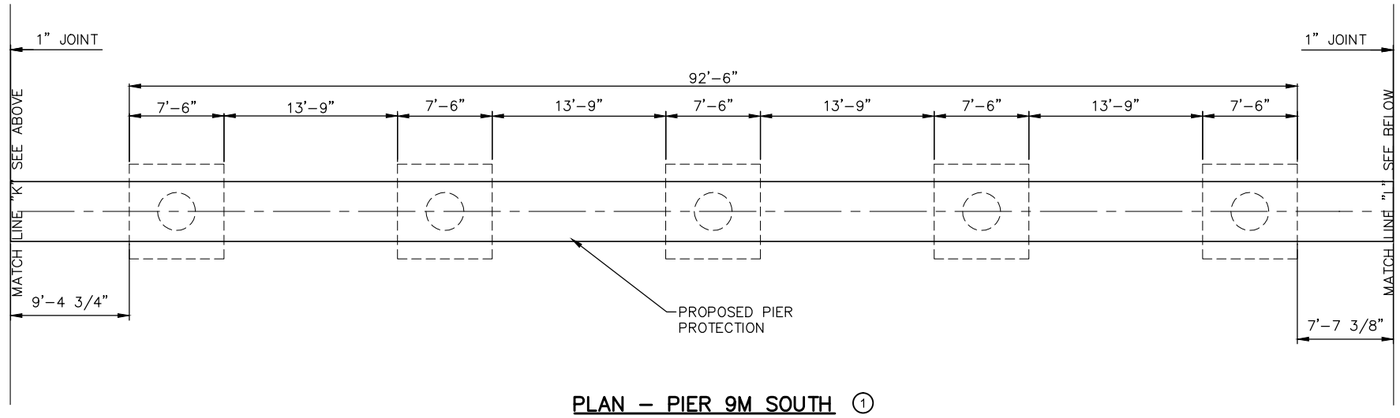

PLAN – PIER 9M SOUTH (1)

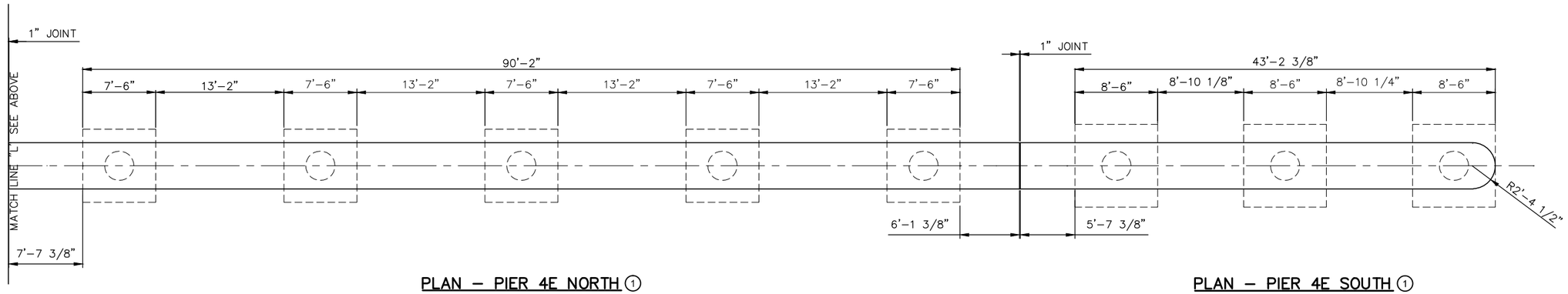

PLAN – PIER 4E NORTH (1)

PLAN – PIER 4E SOUTH (1)

NOTES:

FOR AESTHETIC DETAILS REFER TO SHEET 23

(1) EXISTING PILES NOT SHOWN

NO.	DATE	BY	CHECK	DESIGN	REVISION / SUBMITTAL

DESIGNED BY: AMC | CHECKED BY: LKZ
DRAWN BY: EBM | CHECKED BY: LKZ

AECOM Kimley»Horn

90% SUBMISSION - 01/22/16

METROPOLITAN COUNCIL

SOUTHWEST Green Line LRT Extension

CIVIL - VOLUME 4F
TH 394 (BRIDGE 27770C)
PIER PROTECTION
DETAILS 7

DISCIPLINE: STRUCTURES

SHEET NAME: EX4-STU-PPR-T394-VEH-PIR-007

SHEET 8 OF 23

Jan, 12 2016 04:17 pm V:\3400_ADC\CAD\SEGMENT E4\PLAN SHEETS\STRUCTURES\PIER PROTECTION\EX4-STU-PPR-T394-VEH-DTL.dwg By: Edgar.McKoy

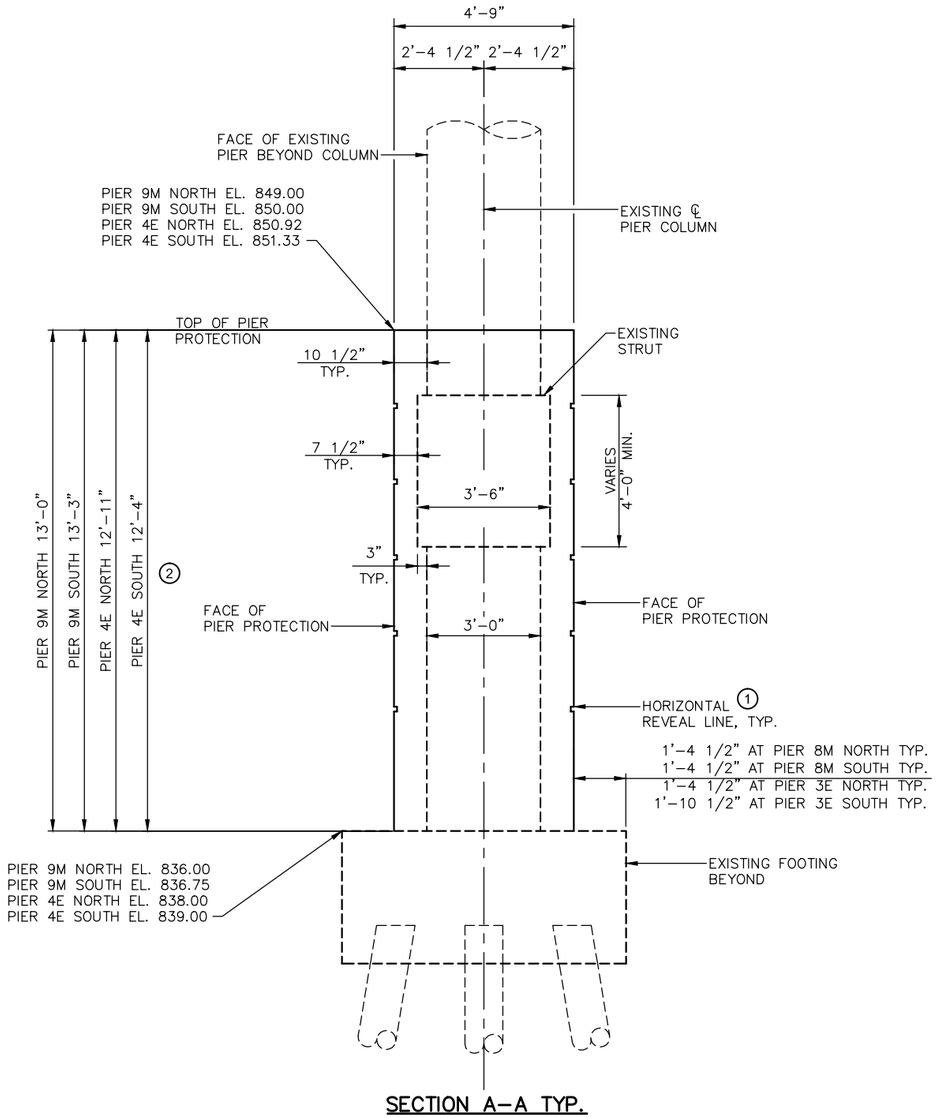

SECTION A-A TYP.

NOTES:

1. FOR AESTHETIC DETAILS REFER TO SHEET 23
2. STRUCTURAL CONCRETE (3B52)

NO.	DATE	BY	CHECK	DESIGN	REVISION / SUBMITTAL

DESIGNED BY: AMC | CHECKED BY: LKZ
DRAWN BY: EBM | CHECKED BY: LKZ

AECOM Kimley»Horn

90% SUBMISSION - 01/22/16

METROPOLITAN COUNCIL

SOUTHWEST Green Line LRT Extension

CIVIL - VOLUME 4F
TH 394 (BRIDGE 27770C)
PIER PROTECTION
DETAILS 8

DISCIPLINE: STRUCTURES

SHEET NAME: EX4-STU-PPR-T394-VEH-PIR-008

SHEET 9 OF 23

Jan, 12 2016 04:17 pm V:\3400_ADC\CAD\SEGMENT E4\PLAN SHEETS\STRUCTURES\PIER PROTECTION\EX4-STU-PPR-T394-VEH-DTL.dwg By: Edgar.McKoy

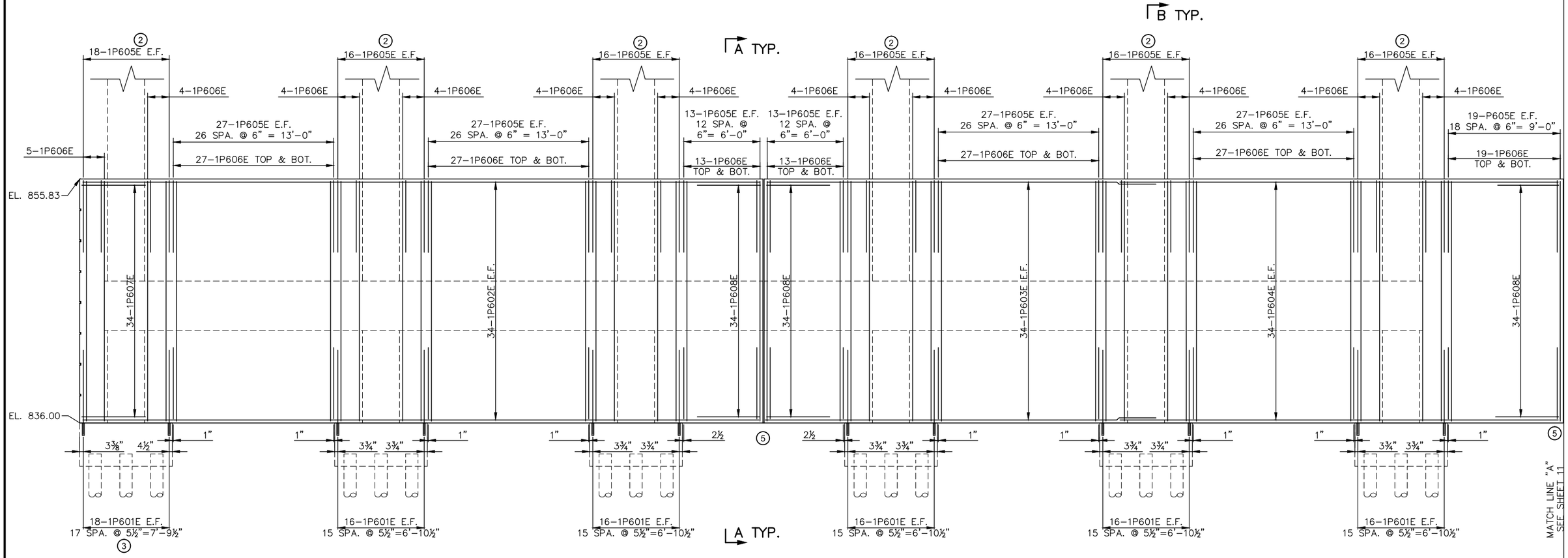

PARTIAL ELEVATION – PIER 8M NORTH ①④

NOTES:

FOR AESTHETIC DETAILS REFER TO SHEET 22

REFER TO SHEET 15 FOR SECTION A–A AND SECTION B–B

① ELEVATION LOOKING SOUTH

② LAP WITH 1P601E

③ MEASURED ALONG CURVE

④ COAT EXISTING PIER COLUMNS W/ APPROVED EPOXY BONDING AGENT

⑤ 1" CORK AND DOWEL JOINT REFER TO SHEET 21 FOR DETAILS

NO.	DATE	BY	CHECK	DESIGN	REVISION / SUBMITTAL

DESIGNED BY: AMC CHECKED BY: LKZ

DRAWN BY: EBM CHECKED BY: LKZ

AECOM Kimley»Horn

90% SUBMISSION - 01/22/16

METROPOLITAN COUNCIL

SOUTHWEST Green Line LRT Extension

CIVIL - VOLUME 4F
TH 394 (BRIDGE 27770C)
PIER PROTECTION
REINFORCEMENT 1

DISCIPLINE: STRUCTURES

SHEET NAME: EX4-STU-PPR-T394-VEH-PIR-009

SHEET 10 OF 23

Jan, 12 2016 04:17 pm V:\3400_ADC\CAD\SEGMENT E4\PLAN SHEETS\STRUCTURES\PIER PROTECTION\EX4-STU-PPR-T394-VEH-DTL.dwg By: Edgar.McKoy

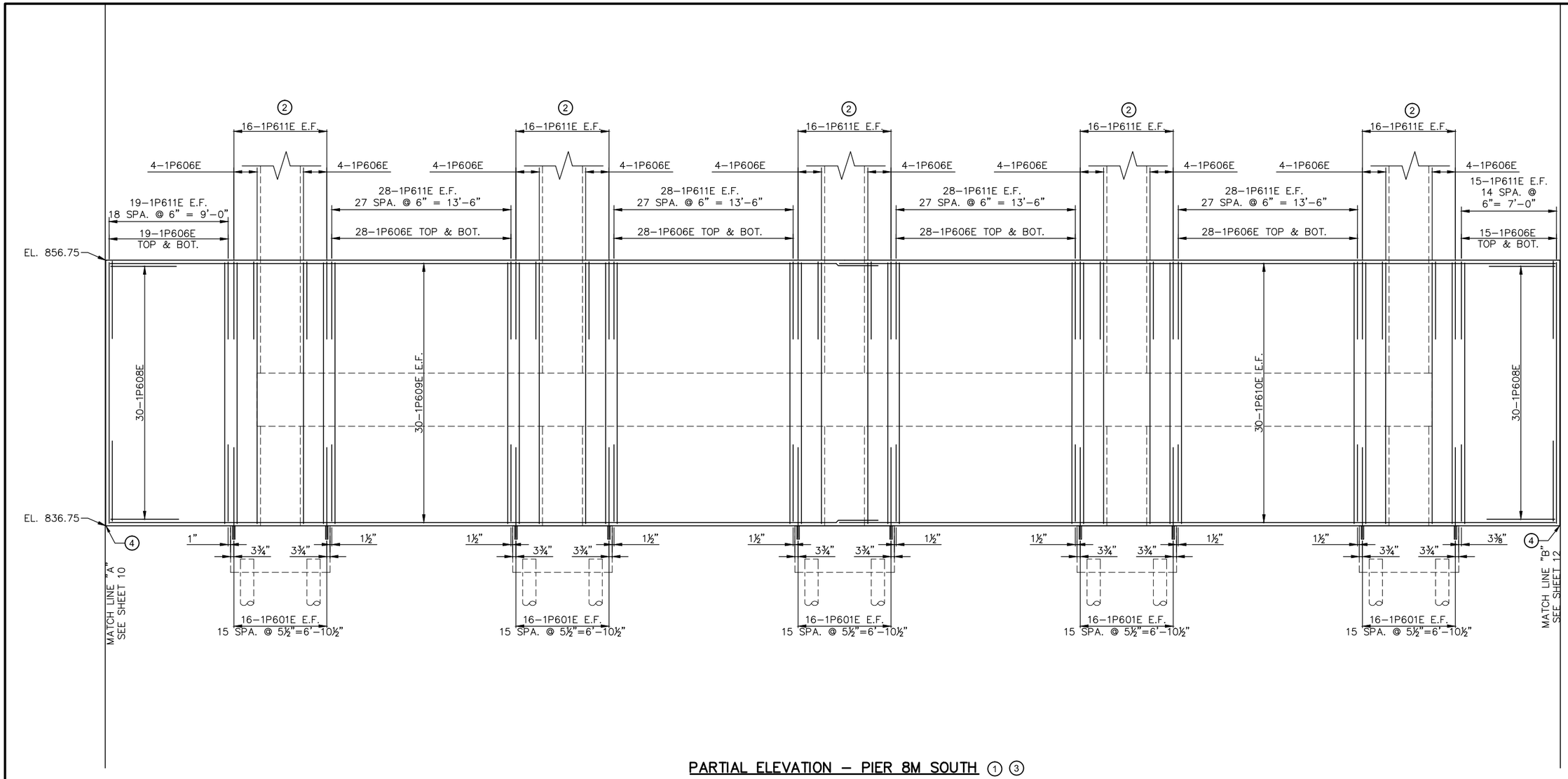

PARTIAL ELEVATION – PIER 8M SOUTH ① ③

NOTES:

FOR AESTHETIC DETAILS REFER TO SHEET 22

① ELEVATION LOOKING SOUTH

② LAP WITH 1P601E

③ COAT EXISTING PIER COLUMNS W/ APPROVED EPOXY BODING AGENT

④ 1" CORK AND DOWEL JOINT REFER TO SHEET 21 FOR DETAILS

NO.	DATE	BY	CHECK	DESIGN	REVISION / SUBMITTAL

DESIGNED BY: AMC CHECKED BY: LKZ
DRAWN BY: EBM CHECKED BY: LKZ

AECOM Kimley»Horn

90% SUBMISSION - 01/22/16

METROPOLITAN COUNCIL

SOUTHWEST Green Line LRT Extension

CIVIL - VOLUME 4F
TH 394 (BRIDGE 27770C)
PIER PROTECTION REINFORCEMENT 2

DISCIPLINE: STRUCTURES

SHEET NAME: EX4-STU-PPR-T394-VEH-PIR-010

SHEET 11 OF 23

Jan, 12 2016 04:17 pm V:\3400_ADC\CAD\SEGMENT E4\PLAN SHEETS\STRUCTURES\PIER PROTECTION\EX4-STU-PPR-T394-VEH-DTL.dwg By: Edgar.McKoy

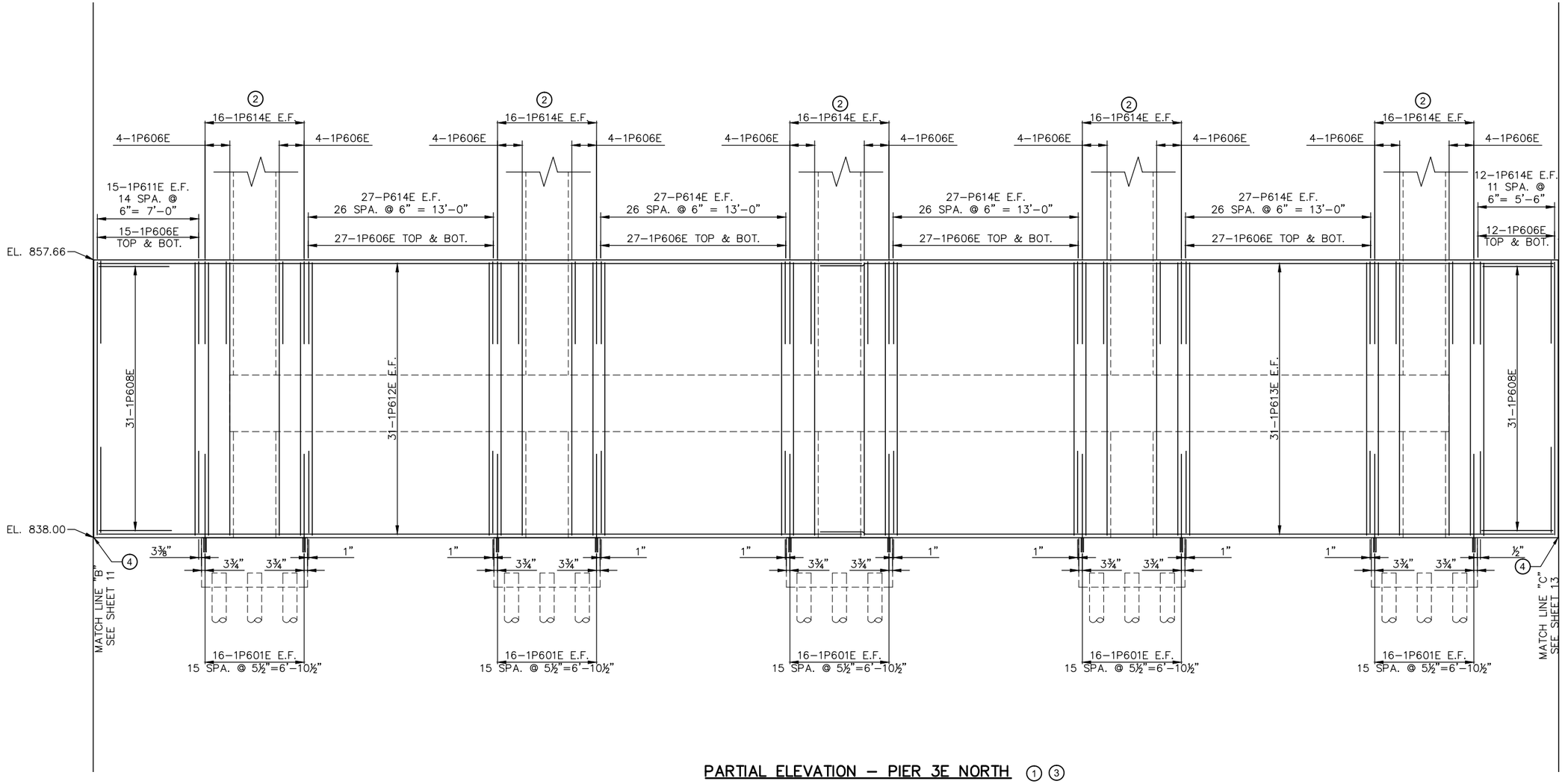

PARTIAL ELEVATION – PIER 3E NORTH ① ③

NOTES:

FOR AESTHETIC DETAILS REFER TO SHEET 22

① ELEVATION LOOKING SOUTH

② LAP WITH 1P601E

③ COAT EXISTING PIER COLUMNS W/ APPROVED EPOXY BODING AGENT

④ 1" CORK AND DOWEL JOINT REFER TO SHEET 21 FOR DETAILS

NO.	DATE	BY	CHECK	DESIGN	REVISION / SUBMITTAL

DESIGNED BY: AMC | CHECKED BY: LKZ
DRAWN BY: EBM | CHECKED BY: LKZ

AECOM Kimley»Horn

90% SUBMISSION - 01/22/16

METROPOLITAN COUNCIL

SOUTHWEST Green Line LRT Extension

CIVIL - VOLUME 4F
TH 394 (BRIDGE 27770C)
PIER PROTECTION
REINFORCEMENT 3

DISCIPLINE: STRUCTURES

SHEET NAME: EX4-STU-PPR-T394-VEH-PIR-011

SHEET 12 OF 23

Jan, 12 2016 04:17 pm V:\3400_ADC\CAD\SEGMENT E4\PLAN SHEETS\STRUCTURES\PIER PROTECTION\EX4-STU-PPR-T394-VEH-DTL.dwg By: Edgar.McKoy

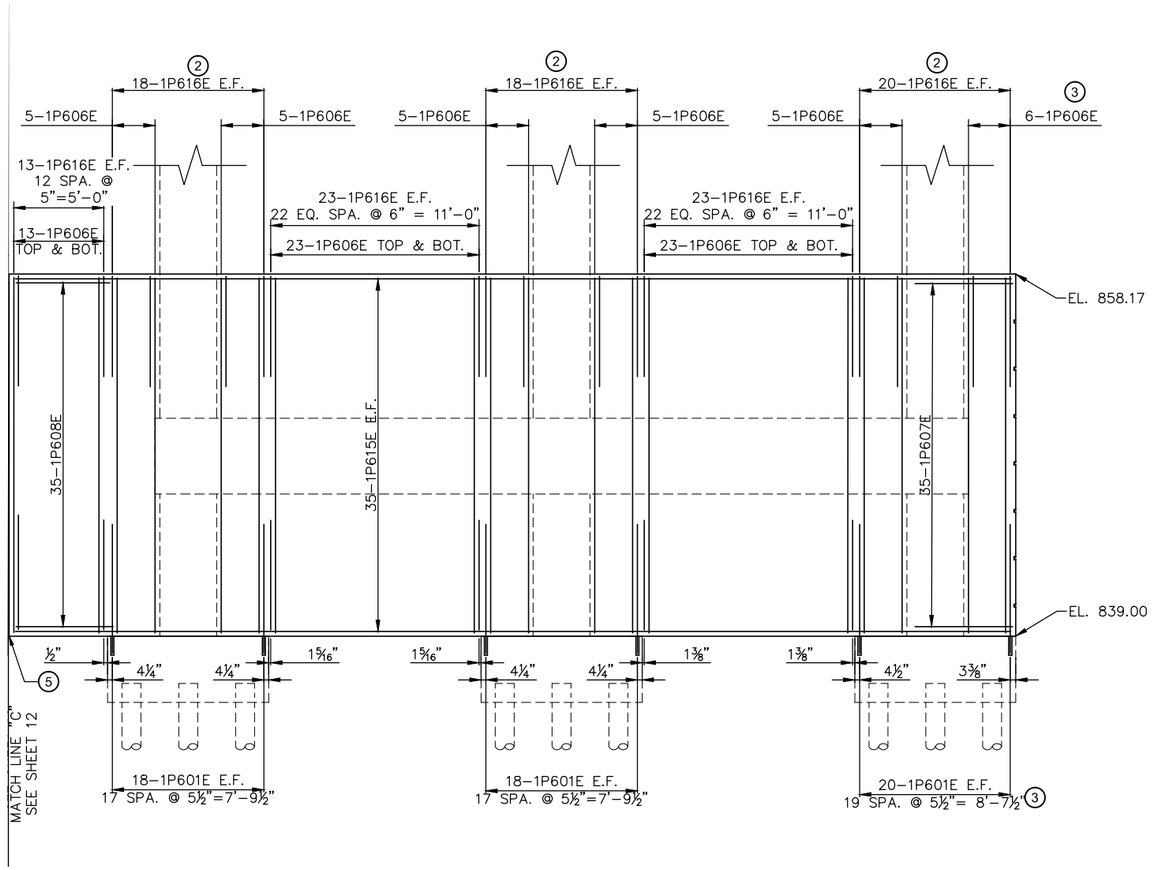

PARTIAL ELEVATION – PIER 3E SOUTH ①④

NOTES:

FOR AESTHETIC DETAILS REFER TO SHEET 22

① ELEVATION LOOKING SOUTH

② LAP WITH 1P601E

③ MEASURE ALONG CURVE

④ COAT EXISTING PIER COLUMNS W/ APPROVED EPOXY BODING AGENT

⑤ 1" CORK AND DOWEL JOINT REFER TO SHEET 21 FOR DETAILS

NO.	DATE	BY	CHECK	DESIGN	REVISION / SUBMITTAL

DESIGNED BY: AMC | CHECKED BY: LKZ
DRAWN BY: EBM | CHECKED BY: LKZ

AECOM Kimley»Horn

90% SUBMISSION - 01/22/16

METROPOLITAN COUNCIL

SOUTHWEST Green Line LRT Extension

CIVIL - VOLUME 4F
TH 394 (BRIDGE 27770C)
PIER PROTECTION
REINFORCEMENT 4

DISCIPLINE: STRUCTURES

SHEET NAME: EX4-STU-PPR-T394-VEH-PIR-012

SHEET 13 OF 23

Jan, 12 2016 04:18 pm V:\3400_ADC\CAD\SEGMENT E4\PLAN SHEETS\STRUCTURES\PIER PROTECTION\EX4-STU-PPR-T394-VEH-DTL.dwg By: Edgar.McKoy

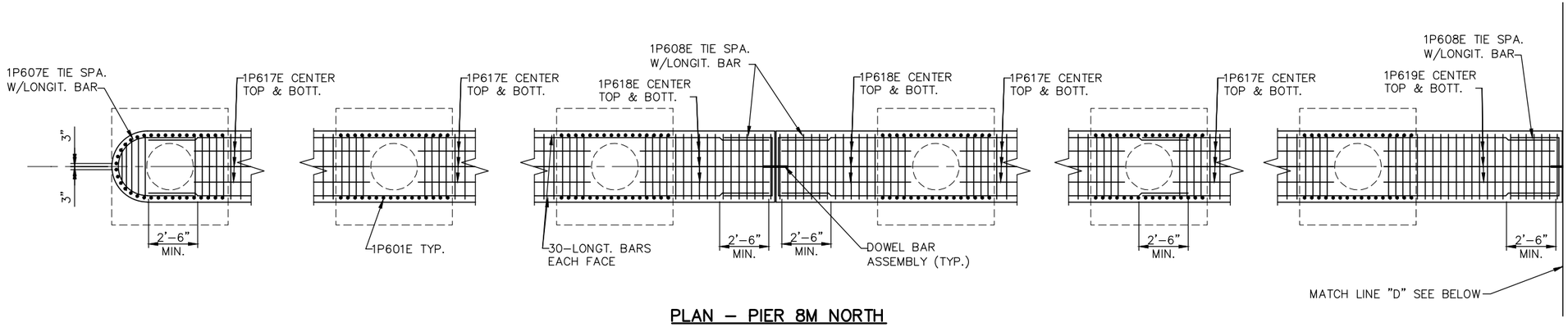

PLAN – PIER 8M NORTH

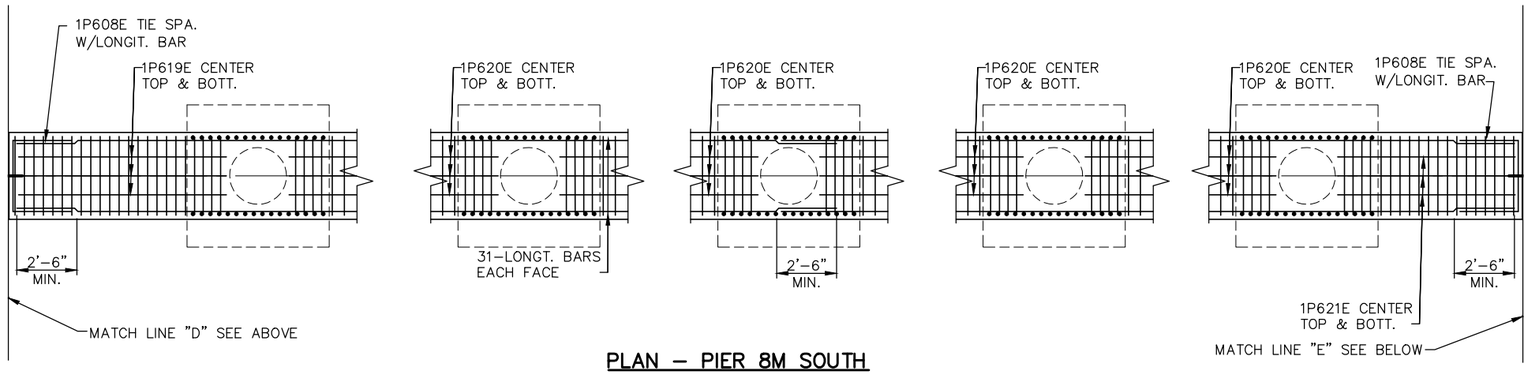

PLAN – PIER 8M SOUTH

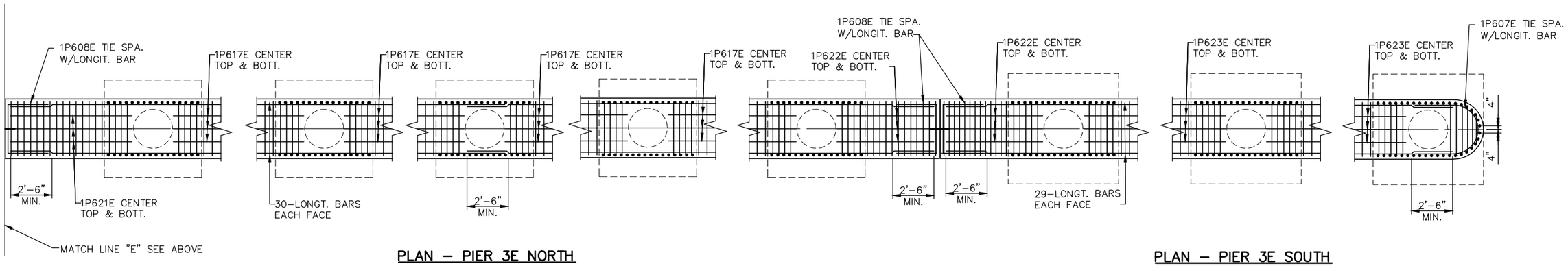

PLAN – PIER 3E NORTH

PLAN – PIER 3E SOUTH

NOTES:

Jan, 12 2016 04:18 pm V:\3400_ADC\CAD\SEGMENT E4\PLAN SHEETS\STRUCTURES\PIER PROTECTION\EX4-STU-PPR-T394-VEH-DTL.dwg By: Edgar.McKoy

NO.	DATE	BY	CHECK	DESIGN	REVISION / SUBMITTAL

DESIGNED BY: AMC | CHECKED BY: LKZ
DRAWN BY: EBM | CHECKED BY: LKZ

AECOM Kimley»Horn

90% SUBMISSION - 01/22/16

METROPOLITAN COUNCIL

SOUTHWEST Green Line LRT Extension

CIVIL - VOLUME 4F
TH 394 (BRIDGE 27770C)
PIER PROTECTION
REINFORCEMENT 5

DISCIPLINE: STRUCTURES
SHEET NAME: EX4-STU-PPR-T394-VEH-PIR-013

SHEET 14 OF 23

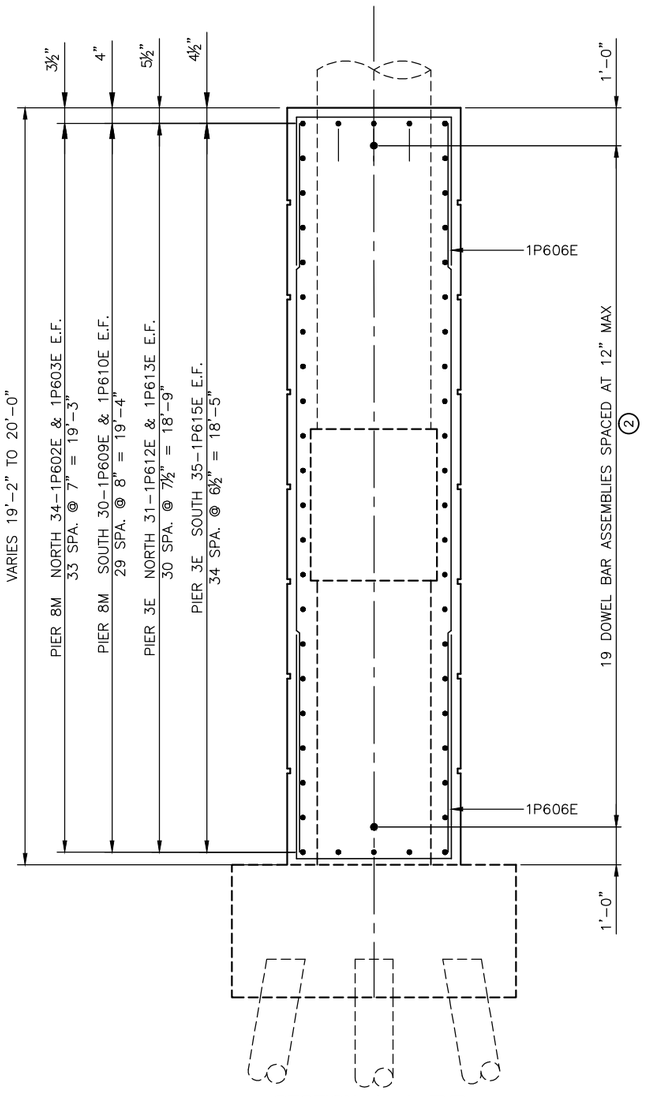

SECTION A–A TYP.

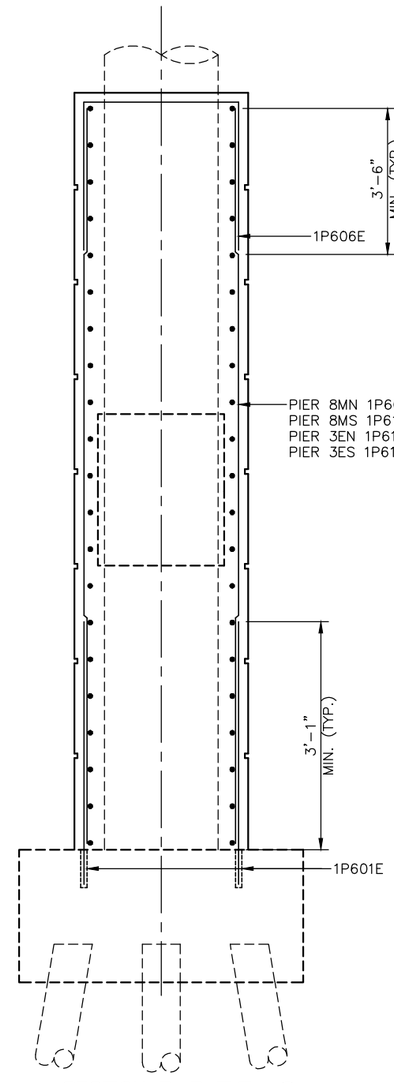

SECTION B–B TYP. 1

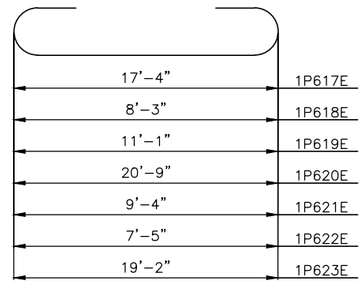

1P617E, 1P618E, 1P619E, 1P620E, 1P621E, 1P622E, 1P623E

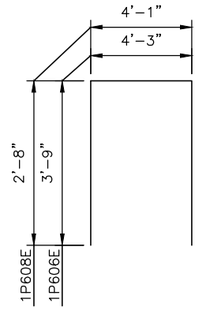

1P606E, 1P608E

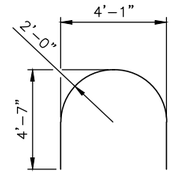

1P607E

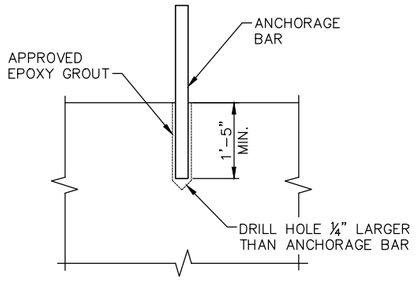

ANCHORAGE DETAIL

BILL OF REINFORCEMENT

BAR	NO.	LENGTH	SHAPE	LOCATION
1P601E	628	4'-7"	STR.	FOOTING ANCHORAGE
1P602E	68	54'-10"	STR.	BARRIER LONG. E.F.
1P603E	68	32'-2"	STR.	BARRIER LONG. E.F.
1P604E	68	37'-6"	STR.	BARRIER LONG. E.F.
1P605E	502	19'-6"	STR.	BARRIER VERT. E.F.
1P606E	1137	11'-9"	BENT	VERTICAL TIE
1P607E	69	11'-6"	BENT	HORIZONTAL TIE
1P608E	259	9'-5"	BENT	HORIZONTAL TIE
1P609E	60	57'-0"	STR.	BARRIER LONG. E.F.
1P610E	60	54'-8"	STR.	BARRIER LONG. E.F.
1P611E	444	19'-8"	STR.	BARRIER VERT. E.F.
1P612E	62	54'-0"	STR.	BARRIER LONG. E.F.
1P613E	62	54'-8"	STR.	BARRIER LONG. E.F.
1P614E	430	19'-4"	STR.	BARRIER VERT. E.F.
1P615E	70	45'-5"	STR.	BARRIER LONG. E.F.
1P616E	230	18'-10"	STR.	BARRIER VERT. E.F.
1P617E	48	18'-8"	BENT	BARRIER LONG. CENTER TOP & BOT.
1P618E	12	9'-7"	BENT	BARRIER LONG. CENTER TOP & BOT.
1P619E	12	12'-5"	BENT	BARRIER LONG. CENTER TOP & BOT.
1P620E	24	22'-1"	BENT	BARRIER LONG. CENTER TOP & BOT.
1P621E	12	10'-8"	BENT	BARRIER LONG. CENTER TOP & BOT.
1P622E	12	8'-9"	BENT	BARRIER LONG. CENTER TOP & BOT.
1P623E	12	19'-2"	BENT	BARRIER LONG. CENTER TOP & BOT.

NOTES:

1. REFER TO SECTION A–A FOR ADDITIONAL INFORMATION
2. 1" CORK AND DOWEL JOINT REFER TO SHEET 21 FOR DETAILS. REMOVE DOWELS IN CONFLICT WITH EXISTING STRUCTURE.

NO.	DATE	BY	CHECK	DESIGN	REVISION / SUBMITTAL

DESIGNED BY: AMC | CHECKED BY: LKZ
DRAWN BY: EBM | CHECKED BY: LKZ

AECOM Kimley»Horn

90% SUBMISSION - 01/22/16

METROPOLITAN COUNCIL

SOUTHWEST Green Line LRT Extension

CIVIL - VOLUME 4F
TH 394 (BRIDGE 27770C)
PIER PROTECTION
REINFORCEMENT 6

DISCIPLINE: STRUCTURES

SHEET NAME: EX4-STU-PPR-T394-VEH-PIR-014

SHEET 15 OF 23

Jan, 12 2016 04:18 pm V:\3400_ADC\CAD\SEGMENT E4\PLAN SHEETS\STRUCTURES\PIER PROTECTION\EX4-STU-PPR-T394-VEH-DTL.dwg By: Edgar.McKoy

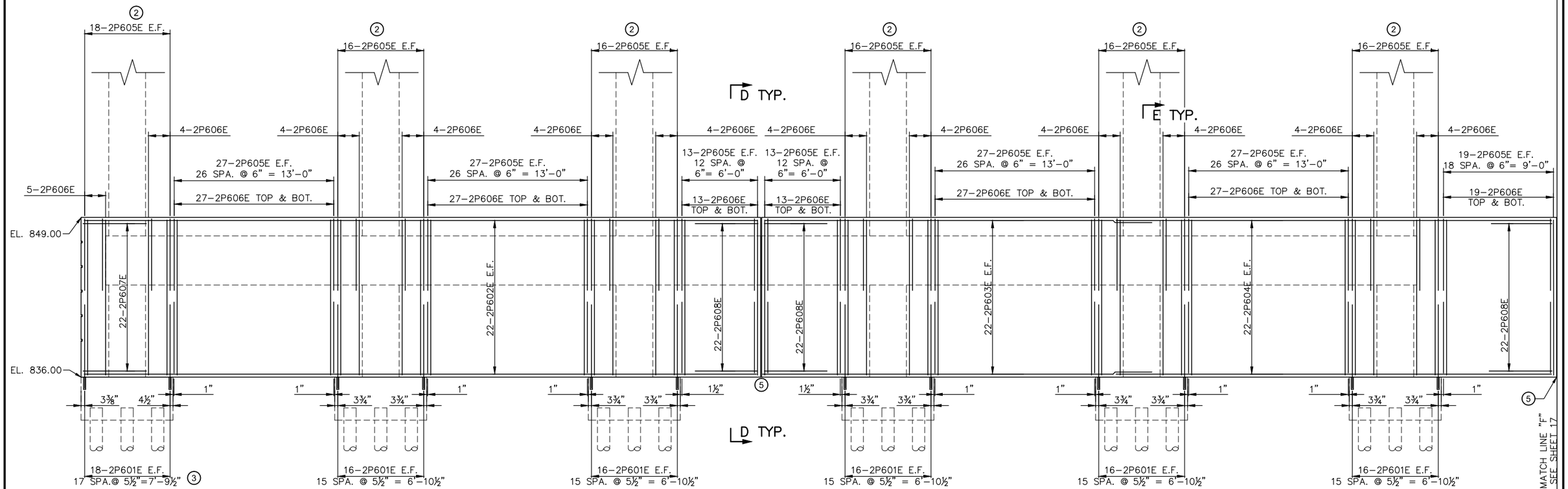

LE TYP.

PARTIAL ELEVATION – PIER 9M NORTH ① ④

NOTES:

FOR AESTHETIC DETAILS REFER TO SHEET 23

REFER TO SHEET 21 FOR SECTION D–D AND SECTION E–E.

① ELEVATION LOOKING SOUTH

② LAP WITH 2P601E

③ MEASURE ALONG CURVE

④ COAT EXISTING PIER COLUMNS W/ APPROVED EPOXY BONDING AGENT

⑤ 1" CORK AND DOWEL JOINT REFER TO SHEET 21 FOR DETAILS

NO.	DATE	BY	CHECK	DESIGN	REVISION / SUBMITTAL

DESIGNED BY: AMC | CHECKED BY: LKZ
DRAWN BY: EBM | CHECKED BY: LKZ

AECOM Kimley»Horn

90% SUBMISSION - 01/22/16

METROPOLITAN COUNCIL

SOUTHWEST Green Line LRT Extension

CIVIL - VOLUME 4F
TH 394 (BRIDGE 27770C)
PIER PROTECTION
REINFORCEMENT 7

DISCIPLINE: STRUCTURES

SHEET NAME: EX4-STU-PPR-T394-VEH-PIR-015

SHEET 16 OF 23

Jan, 12 2016 04:18 pm V:\3400_ADC\CAD\SEGMENT E4\PLAN SHEETS\STRUCTURES\PIER PROTECTION\EX4-STU-PPR-T394-VEH-DTL.dwg By: Edgar.McKoy

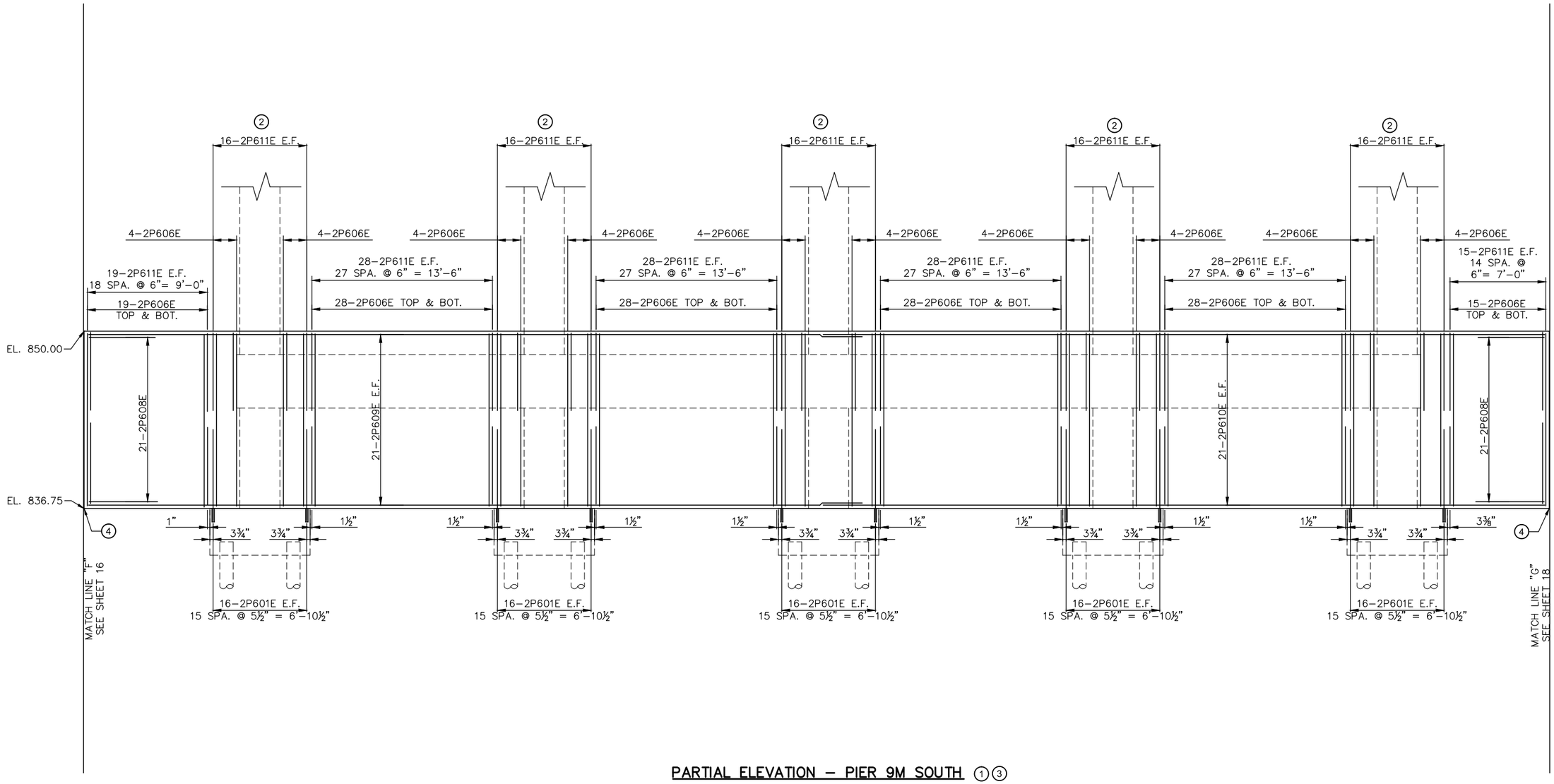

PARTIAL ELEVATION – PIER 9M SOUTH ①③

NOTES:

FOR AESTHETIC DETAILS REFER TO SHEET 23

① ELEVATION LOOKING SOUTH

② LAP WITH 2P601E

③ COAT EXISTING PIER COLUMNS W/ APPROVED EPOXY BONDING AGENT

④ 1" CORK AND DOWEL JOINT REFER TO SHEET 21 FOR DETAILS

NO.	DATE	BY	CHECK	DESIGN	REVISION / SUBMITTAL

DESIGNED BY: AMC | CHECKED BY: LKZ
DRAWN BY: EBM | CHECKED BY: LKZ

AECOM Kimley»Horn

90% SUBMISSION - 01/22/16

METROPOLITAN COUNCIL

SOUTHWEST Green Line LRT Extension

CIVIL - VOLUME 4F
TH 394 (BRIDGE 27770C)
PIER PROTECTION
REINFORCEMENT 8

DISCIPLINE: STRUCTURES

SHEET NAME: EX4-STU-PPR-T394-VEH-PIR-016

SHEET 17 OF 23

Jan, 12 2016 04:18 pm V:\3400_ADC\CAD\SEGMENT E4\PLAN SHEETS\STRUCTURES\PIER PROTECTION\EX4-STU-PPR-T394-VEH-PIR-016.dwg By: Edgar.McKoy

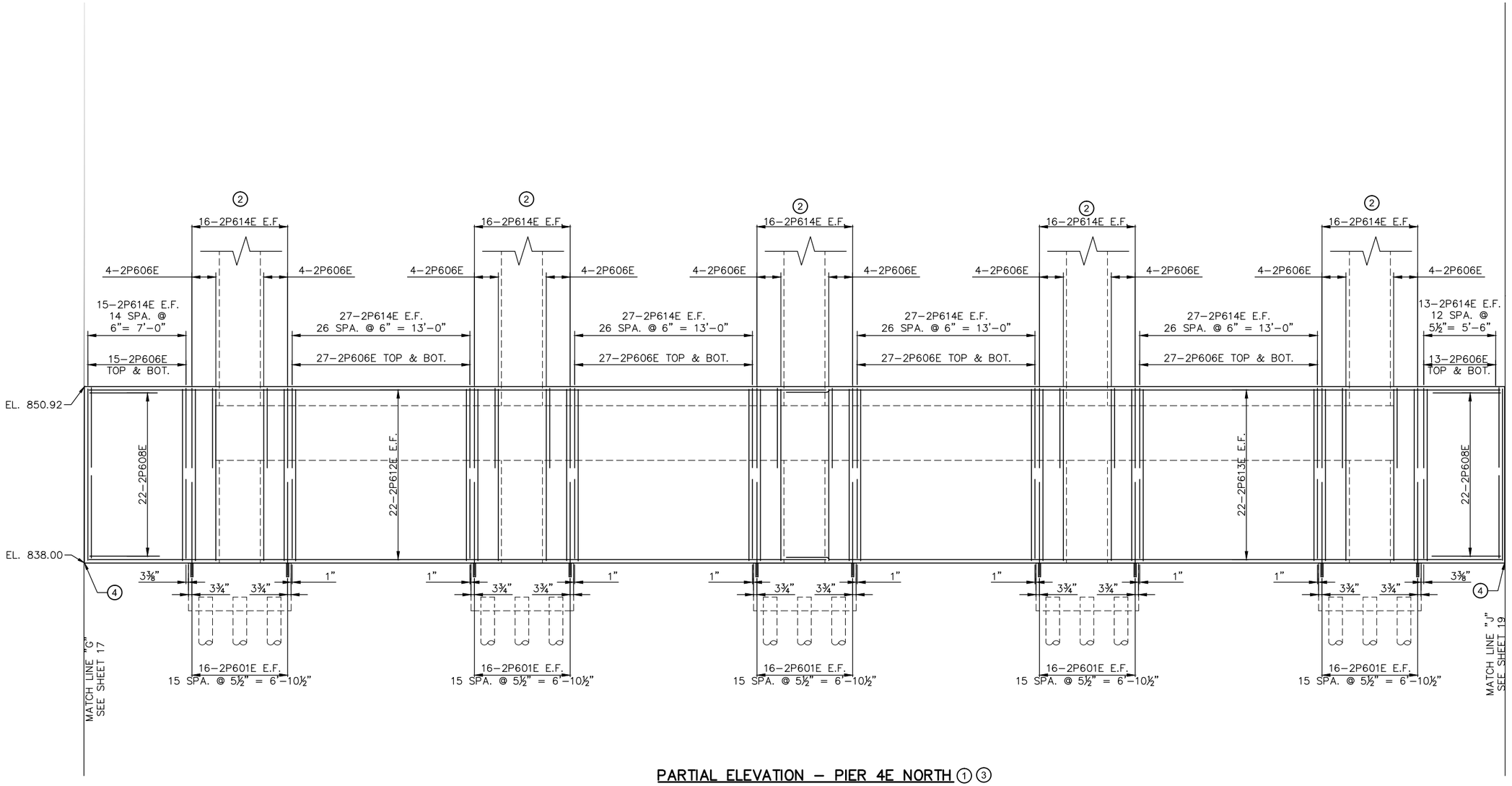

PARTIAL ELEVATION – PIER 4E NORTH ① ③

NOTES:

FOR AESTHETIC DETAILS REFER TO SHEET 23

① ELEVATION LOOKING SOUTH

② LAP WITH 2P601E

③ COAT EXISTING PIER COLUMNS W/ APPROVED EPOXY BONDING AGENT

④ 1" CORK AND DOWEL JOINT REFER TO SHEET 21 FOR DETAILS

NO.	DATE	BY	CHECK	DESIGN	REVISION / SUBMITTAL

DESIGNED BY: AMC | CHECKED BY: LKZ

DRAWN BY: EBM | CHECKED BY: LKZ

AECOM Kimley»Horn

90% SUBMISSION - 01/22/16

METROPOLITAN COUNCIL

SOUTHWEST Green Line LRT Extension

CIVIL - VOLUME 4F
TH 394 (BRIDGE 27770C)
PIER PROTECTION
REINFORCEMENT 9

DISCIPLINE: STRUCTURES

SHEET NAME: EX4-STU-PPR-T394-VEH-PIR-017

SHEET 18 OF 23

Jan, 12 2016 04:18 pm V:\3400_ADC\CAD\SEGMENT E4\PLAN SHEETS\STRUCTURES\PIER PROTECTION\EX4-STU-PPR-T394-VEH-DTL.dwg By: Edgar.McKoy

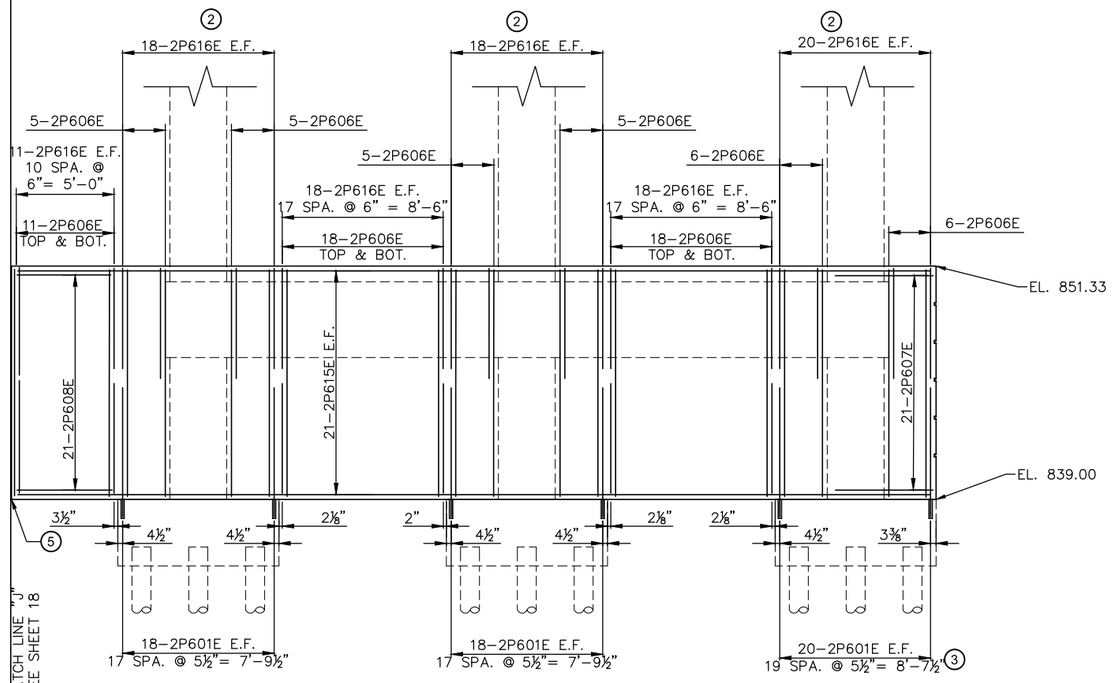

PARTIAL ELEVATION – PIER 4E SOUTH ① ④

NOTES:

FOR AESTHETIC DETAILS REFER TO SHEET 23

① ELEVATION LOOKING SOUTH

② LAP WITH 2P601E

③ MEASURE ALONG CURVE

④ COAT EXISTING PIER COLUMNS W/ APPROVED EPOXY BONDING AGENT

⑤ 1" CORK AND DOWEL JOINT REFER TO SHEET 21 FOR DETAILS

NO.	DATE	BY	CHECK	DESIGN	REVISION / SUBMITTAL

DESIGNED BY: AMC CHECKED BY: LKZ

DRAWN BY: EBM CHECKED BY: LKZ

AECOM Kimley»Horn

90% SUBMISSION - 01/22/16

METROPOLITAN COUNCIL

SOUTHWEST Green Line LRT Extension

CIVIL - VOLUME 4F
TH 394 (BRIDGE 27770C)
PIER PROTECTION
REINFORCEMENT 10

DISCIPLINE: STRUCTURES

SHEET NAME: EX4-STU-PPR-T394-VEH-PIR-018

SHEET 19 OF 23

Jan, 12 2016 04:18 pm V:\3400_ADC\CAD\SEGMENT E4\PLAN SHEETS\STRUCTURES\PIER PROTECTION\EX4-STU-PPR-T394-VEH-DTL.dwg By: Edgar.McKoy

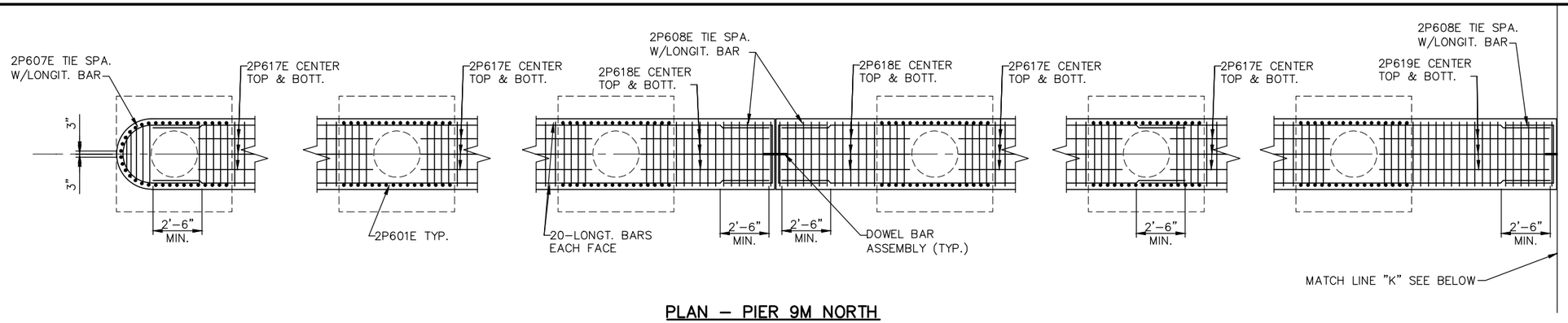

PLAN – PIER 9M NORTH

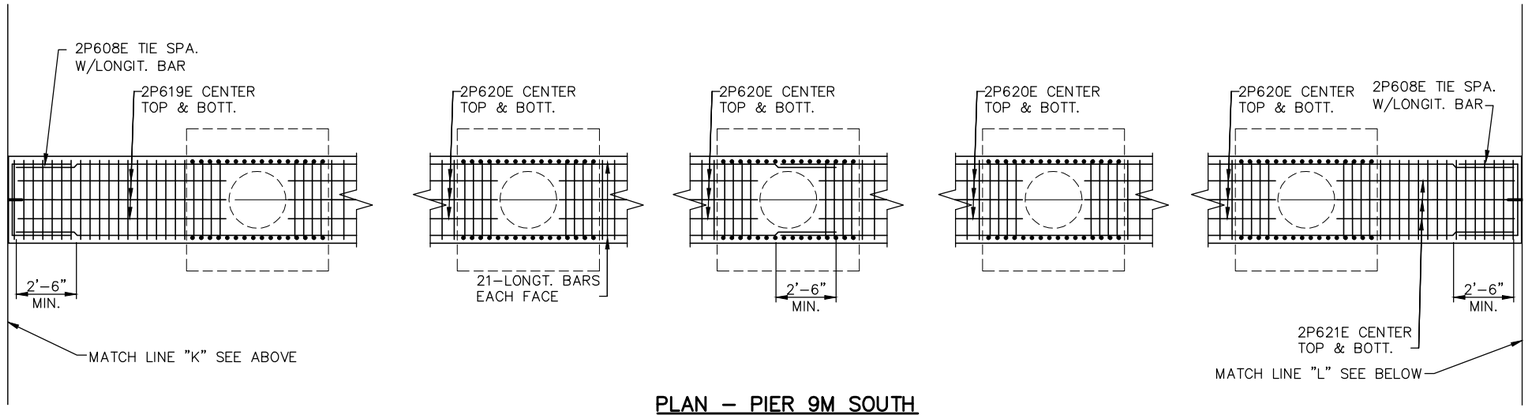

PLAN – PIER 9M SOUTH

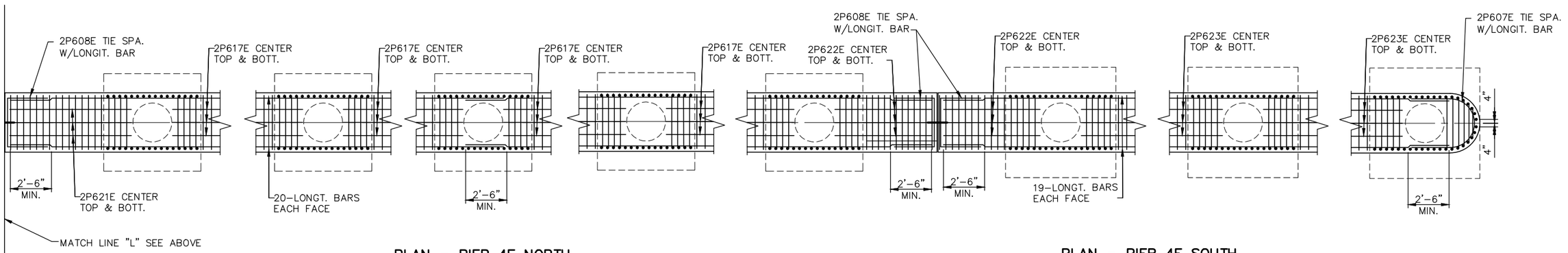

PLAN – PIER 4E NORTH

PLAN – PIER 4E SOUTH

NOTES:

NO.	DATE	BY	CHECK	DESIGN	REVISION / SUBMITTAL

DESIGNED BY: AMC | CHECKED BY: LKZ
DRAWN BY: EBM | CHECKED BY: LKZ

AECOM Kimley»Horn

90% SUBMISSION - 01/22/16

METROPOLITAN COUNCIL

SOUTHWEST Green Line LRT Extension

CIVIL - VOLUME 4F
TH 394 (BRIDGE 27770C)
PIER PROTECTION
REINFORCEMENT 11

DISCIPLINE: STRUCTURES

SHEET NAME: EX4-STU-PPR-T394-VEH-PIR-019

SHEET 20 OF 23

Jan, 12 2016 04:18 pm V:\3400_ADC\CAD\SEGMENT E4\PLAN SHEETS\STRUCTURES\PIER PROTECTION\EX4-STU-PPR-T394-VEH-DTL.dwg By: Edgar.McKoy

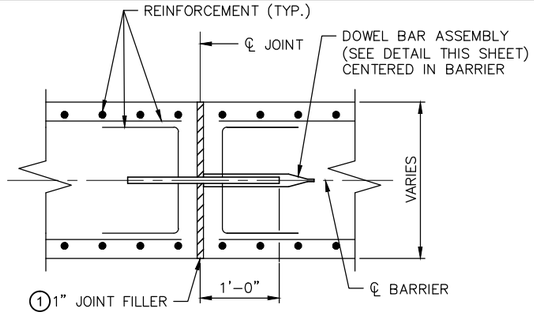

CORK AND DOWELED JOINT DETAIL
(TYPICAL SECTION THROUGH JOINT)
(3)

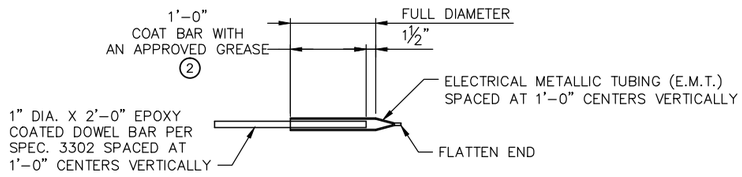

DOWEL BAR ASSEMBLY

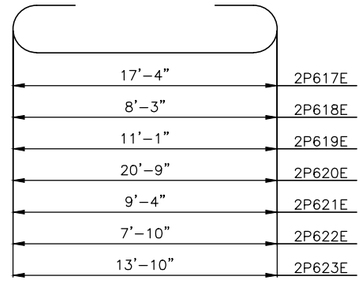

2P617E, 2P618E, 2P619E, 2P620E, 2P621E, 2P622E, 2P623E

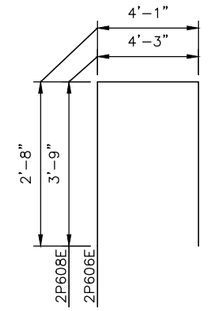

2P606E, 2P608E

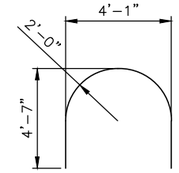

2P607E

DOWEL NOTES:

THE MATERIAL AND PLACEMENT OF THE CORK AND DOWEL JOINT CONSTRUCTION JOINT (DOWEL BAR ASSEMBLIES), IS INCLIDENTAL.

THE CONTRACTOR SHALL ASSIGN TO THE REINFORCING BAR SUPPLIER THE RESPONSIBILITY OF SUPPLYING THE NECESSARY MATERIALS ASSOCIATED WITH THE DETAILS SHOWN ON THIS SHEET.

(1) JOINT FILLER SHALL BE CORK SPEC. 2401.3E3.

(2) GREASE SHALL BE AN APPROVED HIGH PRESSURE TYPE THAT IS EFFECTIVE OVER THE FULL RANGE OF EXPECTED TEMPERATURES AND RESISTANT TO CHEMICAL ACTION.

(3) DOWEL BAR ASSEMBLY MUST BE PLACED PERPENDICULAR TO JOINT AND PARALLEL TO THE WALL FACE, AND TO EACH OTHER.

(4) 1" CORK AND DOWEL JOINT. REMOVE DOWELS IN CONFLICT WITH EXISTING STRUCTURE.

BILL OF REINFORCEMENT				
BAR	NO.	LENGTH	SHAPE	LOCATION
2P601E	628	4'-7"	STR.	FOOTING ANCHORAGE
2P602E	44	54'-10"	STR.	BARRIER LONG. E.F.
2P603E	44	32'-2"	STR.	BARRIER LONG. E.F.
2P604E	44	37'-6"	STR.	BARRIER LONG. E.F.
2P605E	502	12'-8"	STR.	BARRIER VERT. E.F.
2P606E	1124	11'-9"	BENT	VERTICAL TIE
2P607E	43	11'-6"	BENT	HORIZONTAL TIE
2P608E	173	9'-5"	BENT	HORIZONTAL TIE
2P609E	42	57'-0"	STR.	BARRIER LONG. E.F.
2P610E	42	54'-8"	STR.	BARRIER LONG. E.F.
2P611E	444	12'-11"	STR.	BARRIER VERT. E.F.
2P612E	44	54'-0"	STR.	BARRIER LONG. E.F.
2P613E	44	54'-11"	STR.	BARRIER LONG. E.F.
2P614E	432	12'-7"	STR.	BARRIER VERT. E.F.
2P615E	42	46'-3"	STR.	BARRIER LONG. E.F.
2P616E	206	12'-0"	STR.	BARRIER VERT. E.F.
2P617E	48	18'-8"	BENT	BARRIER LONG. CENTER TOP & BOT.
2P618E	12	9'-7"	BENT	BARRIER LONG. CENTER TOP & BOT.
2P619E	12	12'-5"	BENT	BARRIER LONG. CENTER TOP & BOT.
2P620E	24	22'-1"	BENT	BARRIER LONG. CENTER TOP & BOT.
2P621E	12	10'-8"	BENT	BARRIER LONG. CENTER TOP & BOT.
2P622E	12	9'-2"	BENT	BARRIER LONG. CENTER TOP & BOT.
2P623E	12	15'-2"	BENT	BARRIER LONG. CENTER TOP & BOT.

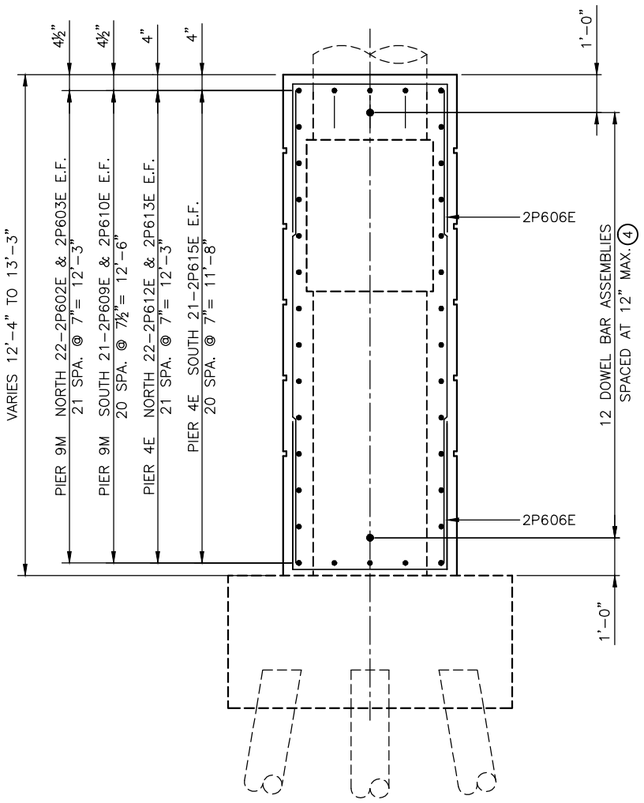

SECTION D–D TYP.

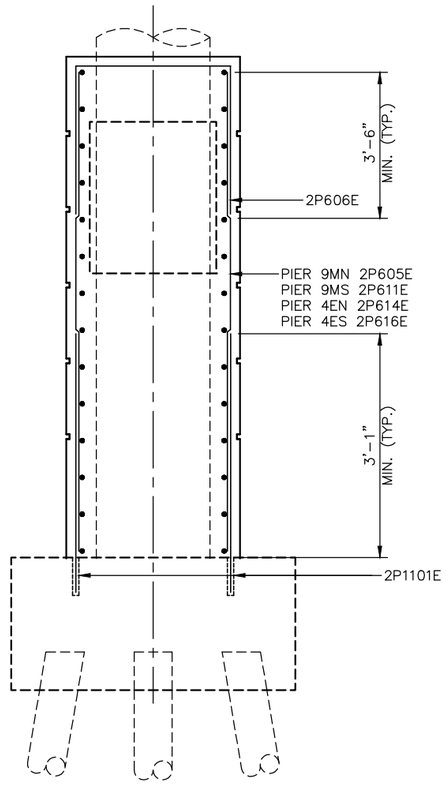

SECTION E–E TYP.

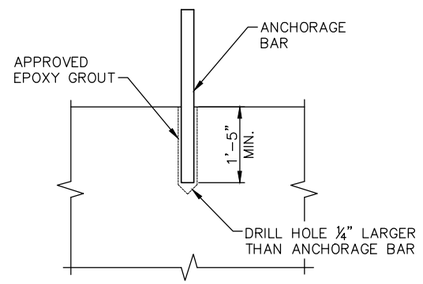

ANCHORAGE DETAIL

NO.	DATE	BY	CHECK	DESIGN	REVISION / SUBMITTAL

DESIGNED BY: AMC | CHECKED BY: LKZ
DRAWN BY: EBM | CHECKED BY: LKZ

AECOM Kimley»Horn

90% SUBMISSION - 01/22/16

METROPOLITAN COUNCIL

SOUTHWEST Green Line LRT Extension

CIVIL - VOLUME 4F
TH 394 (BRIDGE 27770C)
PIER PROTECTION
REINFORCEMENT 12

DISCIPLINE: STRUCTURES
SHEET NAME: EX4-STU-PPR-T394-VEH-PIR-020

SHEET 21 OF 23

Jan, 12 2016 04:18 pm V:\3400_ADC\CAD\SEGMENT E4\PLAN SHEETS\STRUCTURES\PIER PROTECTION\EX4-STU-PPR-T394-VEH-DTL.dwg By: Edgar.McKoy

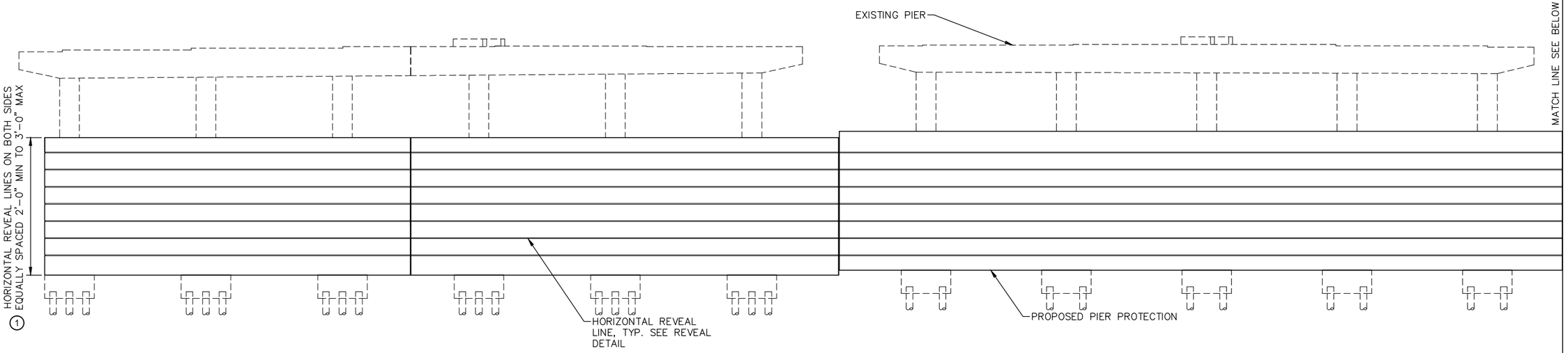

PIER 8M NORTH

PIER 8M SOUTH

PARTIAL ELEVATION

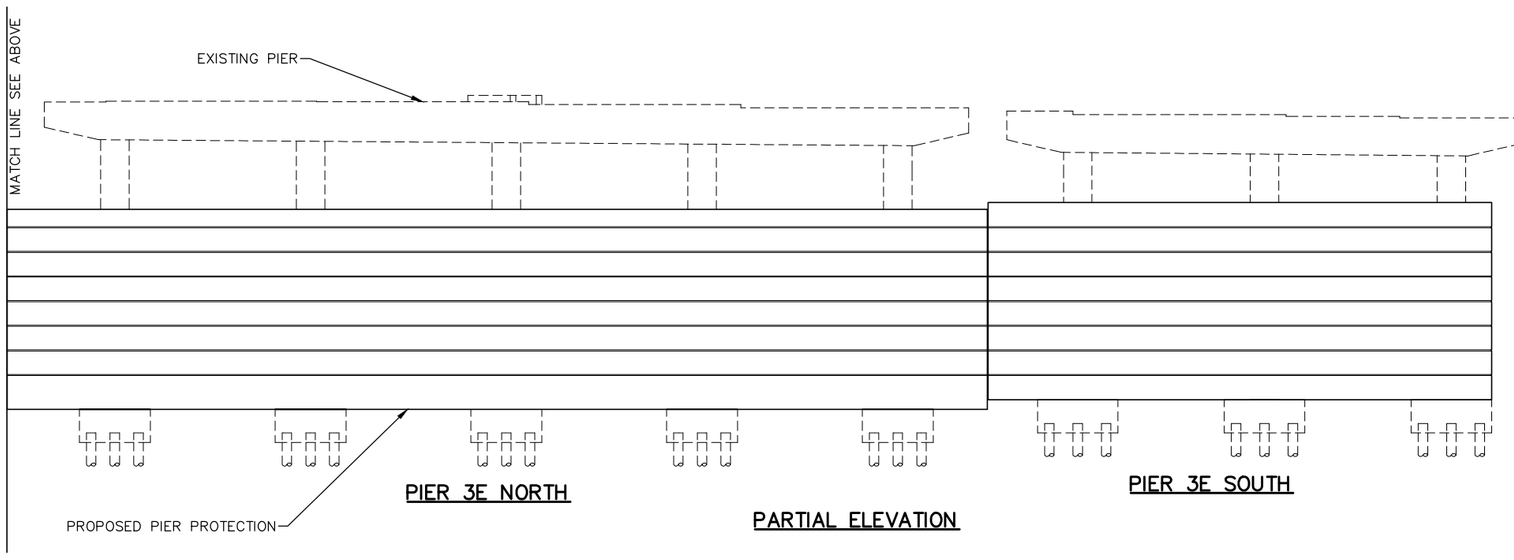

PIER 3E NORTH

PIER 3E SOUTH

PARTIAL ELEVATION

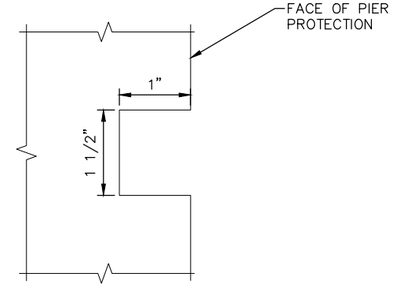

REVEAL DETAIL

NOTES:

1. PROVIDE HORIZONTAL REVEAL LINES EQUALLY SPACED AS SHOWN ON FRONT AND BACK FACE OF PIER PROTECTION.

   PROVIDE ¼" CHAMFER AT TOP OF PIER PROTECTION

   ELEVATION VIEW SHOWN LOOKING SOUTH

NO.	DATE	BY	CHECK	DESIGN	REVISION / SUBMITTAL

DESIGNED BY: AMC | CHECKED BY: LKZ
DRAWN BY: EBM | CHECKED BY: LKZ

AECOM Kimley»Horn

90% SUBMISSION - 01/22/16

METROPOLITAN COUNCIL

SOUTHWEST Green Line LRT Extension

CIVIL - VOLUME 4F
TH 394 (BRIDGE 27770C)
PIER PROTECTION
AESTHETIC DETAILS 1

DISCIPLINE: STRUCTURES

SHEET NAME: EX4-STU-PPR-T394-VEH-PIR-021

SHEET 22 OF 23

Jan, 12 2016 04:18 pm v:\3400_ADC\CAD\SEGMENT E4\PLAN SHEETS\STRUCTURES\PIER PROTECTION\EX4-STU-PPR-T394-VEH-DTL.dwg By: Edgar.McKoy

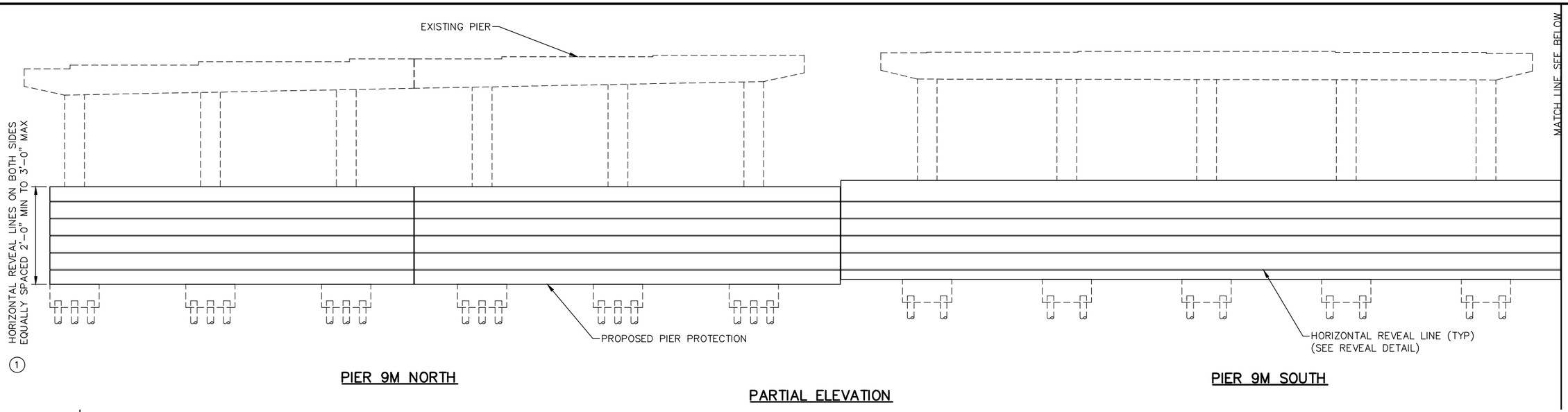

PIER 9M NORTH

PIER 9M SOUTH

PARTIAL ELEVATION

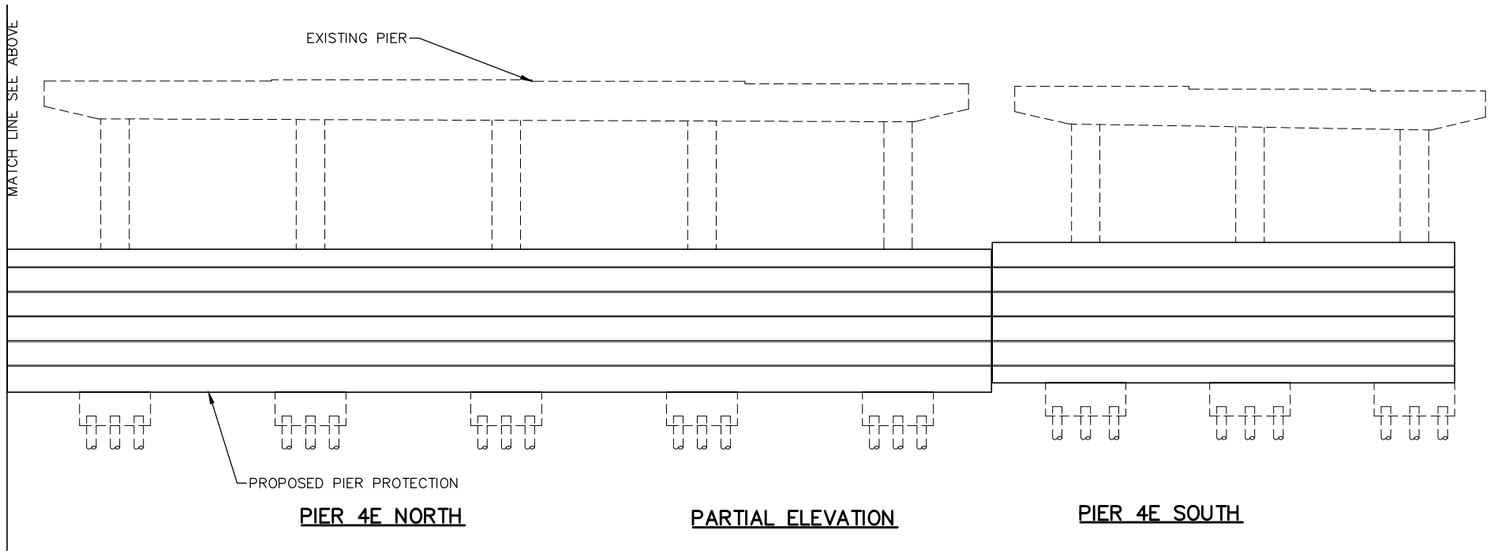

PIER 4E NORTH

PARTIAL ELEVATION

PIER 4E SOUTH

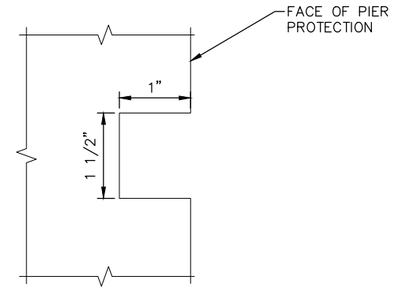

REVEAL DETAIL

NOTES:

1. PROVIDE HORIZONTAL REVEAL LINES EQUALLY SPACED AS SHOWN ON FRONT AND BACK FACE OF PIER PROTECTION.

   PROVIDE ¾" CHAMFER AT TOP OF PIER PROTECTION

   ELEVATION VIEW SHOWN LOOKING SOUTH

NO.	DATE	BY	CHECK	DESIGN	REVISION / SUBMITTAL

DESIGNED BY: AMC | CHECKED BY: LKZ
DRAWN BY: AES | CHECKED BY: LKZ

AECOM Kimley»Horn

90% SUBMISSION - 01/22/16

METROPOLITAN COUNCIL

SOUTHWEST Green Line LRT Extension

CIVIL - VOLUME 4F
TH 394 (BRIDGE 27770C)
PIER PROTECTION
AESTHETIC DETAILS 2

DISCIPLINE: STRUCTURES

SHEET NAME: EX4-STU-PPR-T394-VEH-PIR-022

SHEET 23 OF 23

Jan, 12 2016 04:18 pm V:\3400_ADC\CAD\SEGMENT E4\PLAN SHEETS\STRUCTURES\PIER PROTECTION\EX4-STU-PPR-T394-VEH-DTL.dwg By: Edgar.McKoy