METROPOLITAN COUNCIL

SOUTHWEST
Green Line LRT Extension

CIVIL CONSTRUCTION

VOLUME 4D
BRIDGES

90% SUBMISSION
DATE : 01/22/16

PLAN PACKAGE INDEX / DESCRIPTION	
CIVIL CONSTRUCTION	BID ALTERNATES
VOLUME 1 - EXISTING CONDITIONS & REMOVALS	VOLUME A - NOT USED
VOLUME 2A - CIVIL	VOLUME B - NOT USED
VOLUME 2B - CIVIL	VOLUME C - BID ALTERNATE 3 (LRCI 5) ▲
VOLUME 3A - TRACKWORK	VOLUME D - BID ALTERNATE 4 (LRCI 6) ▲
VOLUME 3B - TRACKWORK	VOLUME E - BID ALTERNATE 5 (LRCI 7) ▲
VOLUME 3C - TRACKWORK DETAILS	VOLUME F - BID ALTERNATE 6 (LRCI 8) ▲
VOLUME 4A - BRIDGES	VOLUME G - BID ALTERNATE 7 (LRCI 4) ▲
VOLUME 4B - BRIDGES	VOLUME H - BID ALTERNATE 8 (LRCI 10) ▲
VOLUME 4C - BRIDGES	VOLUME I - BID ALTERNATE 9 (LRCI 11) ▲
VOLUME 4D - BRIDGES	VOLUME J - BID ALTERNATE 10 (LRCI 12)
VOLUME 4E - BRIDGES	VOLUME K - BID ALTERNATE 11 (LRCI 13)
VOLUME 4F - BRIDGES	VOLUME L - BID ALTERNATE 12 (LRCI 14)
VOLUME 4G - BRIDGES	VOLUME M - BID ALTERNATE 13 (LRCI 26)
VOLUME 5 - TUNNELS	VOLUME N - BID ALTERNATE 14 (LRCI 27)
VOLUME 6 - RETAINING WALLS	VOLUME O - BID ALTERNATE 15 (LRCI 17)
VOLUME 7 - UTILITIES	VOLUME P - BID ALTERNATE 20 (LRCI 32)
VOLUME 8 - DRAINAGE	VOLUME Q - BID ALTERNATE 21 (LRCI 33)
VOLUME 9 - URBAN DESIGN / LANDSCAPE	
VOLUME 10A - TRAFFIC	
VOLUME 10B - LIGHTING *	
VOLUME 11A - STATIONS ▲	
VOLUME 11B - STATIONS	
VOLUME 11C - STATIONS	
VOLUME 11D - STATIONS	
VOLUME 11E - STATIONS	
VOLUME 12 - SYSTEMS	

* TO BE SUBMITTED AT A LATER DATE
▲ SUBMITTED AT 75%, NOT INCLUDED IN 90%

THE PROPOSED SOUTHWEST LRT PROJECT IS NOT FINAL BUT IS STILL UNDER ENVIRONMENTAL REVIEW AND THE PROJECT IS SUBJECT TO CHANGE. THESE PLANS ARE NOT FINAL.

THE COUNCIL, THROUGH THE DEVELOPMENT OF THESE PLANS, DOES NOT INTEND THAT THEY WILL PREJUDICE OR COMPROMISE ANY STATE OR FEDERAL ENVIRONMENTAL REVIEW OR OTHER LEGAL REQUIREMENTS. THESE PLANS DO NOT LIMIT THE PROJECT DESIGN ALTERNATIVES OR MITIGATIVE MEASURES THAT THE COUNCIL MAY UNDERTAKE IF THE PROPOSED SWLRT PROJECT PROCEEDS TO CONSTRUCTION.

THE COUNCIL WILL NOT TAKE FINAL ACTION ON THIS MATTER UNLESS THE COUNCIL PROCEEDS WITH THE PROJECT AFTER THE FTA'S RECORD OF DECISION AND THE COUNCIL'S DETERMINATION OF ADEQUACY.

WARNING: THIS RECORD MAY CONTAIN SENSITIVE SECURITY INFORMATION THAT IS CONTROLLED UNDER 49 CFR PARTS 15 AND 1520. NO PART OF THIS RECORD MAY BE DISCLOSED TO PERSONS WITHOUT A "NEED TO KNOW", AS DEFINED IN 49 CFR PARTS 15 AND 1520, EXCEPT WITH THE WRITTEN PERMISSION OF THE ADMINISTRATOR OF THE TRANSPORTATION SECURITY ADMINISTRATION OR THE SECRETARY OF TRANSPORTATION. UNAUTHORIZED RELEASE MAY RESULT IN CIVIL PENALTY OR OTHER ACTION. FOR U.S. GOVERNMENT AGENCIES, PUBLIC DISCLOSURE IS GOVERNED BY 5 U.S.C. 552 AND 49 CFR PARTS 15 AND 1520.

AECOM

CIVIL CONSTRUCTION

SHT #	SHEET NAME	SHEET DESCRIPTION	STATION	STATION	REV
		VOLUME 4D - BRIDGES			
1	00-GEN-CVR-001	COVER SHEET			
2	00-GEN-IDX-001	VOLUME INDEX OF PLAN SHEETS SHEET 1			
3	00-GEN-IDX-002	VOLUME INDEX OF PLAN SHEETS SHEET 2			
4	W0-GEN-KEY-001	GENERAL KEY MAP SHEET 1			
5	E0-GEN-KEY-002	GENERAL KEY MAP SHEET 2			
6	00-GEN-NTS-001	GENERAL NOTES, ABBREVIATIONS, AND SYMBOLS SHEET 1			
7	00-GEN-NTS-002	GENERAL NOTES, ABBREVIATIONS, AND SYMBOLS SHEET 2			
		EXCELSIOR BLVD - BRIDGE 27C10			
1	CBR27C10-BRG-KEY-001	KEY PLAN	2544+25.3	2560+45.3	
2	CBR27C10-BRG-GPE-001	GENERAL NOTES 1			
3	CBR27C10-BRG-GPE-002	GENERAL NOTES 2			
4	CBR27C10-BRG-GPE-003	GENERAL PLAN & ELEVATION 1			
5	CBR27C10-BRG-GPE-004	GENERAL PLAN & ELEVATION 2			
6	CBR27C10-BRG-GPE-005	GENERAL PLAN & ELEVATION 3			
7	CBR27C10-BRG-GPE-006	GENERAL PLAN & ELEVATION 4			
8	CBR27C10-BRG-GPE-007	TRANSVERSE SECTION			
9	CBR27C10-BRG-GPE-008	HORIZONTAL ALIGNMENT CONTROL PLAN			
10	CBR27C10-BRG-GPE-009	TREATMENT OF HORIZONTAL CURVATURE			
11	CBR27C10-BRG-SUP-089	BRIDGE LAYOUT 1			
12	CBR27C10-BRG-SUP-090	BRIDGE LAYOUT 2			
13	CBR27C10-BRG-ABT-001	CORNER DETAILS			
14	CBR27C10-BRG-ABT-002	WEST ABUTMENT FOOTING DETAILS			
15	CBR27C10-BRG-ABT-003	WEST ABUTMENT DETAILS 1			
16	CBR27C10-BRG-ABT-004	WEST ABUTMENT DETAILS 2			
17	CBR27C10-BRG-ABT-005	WEST ABUTMENT DETAILS 3			
18	CBR27C10-BRG-ABT-006	WEST ABUTMENT REINFORCEMENT 1			
19	CBR27C10-BRG-ABT-007	WEST ABUTMENT REINFORCEMENT 2			
20	CBR27C10-BRG-ABT-008	WEST ABUTMENT REINFORCEMENT 3			
21	CBR27C10-BRG-ABT-009	WEST ABUTMENT REINFORCEMENT 4			
22	CBR27C10-BRG-ABT-010	EAST ABUTMENT FOOTING DETAILS			
23	CBR27C10-BRG-ABT-011	EAST ABUTMENT DETAILS 1			
24	CBR27C10-BRG-ABT-012	EAST ABUTMENT DETAILS 2			
25	CBR27C10-BRG-ABT-013	EAST ABUTMENT DETAILS 3			
26	CBR27C10-BRG-ABT-014	EAST ABUTMENT REINFORCEMENT 1			
27	CBR27C10-BRG-ABT-015	EAST ABUTMENT REINFORCEMENT 2			
28	CBR27C10-BRG-ABT-016	EAST ABUTMENT REINFORCEMENT 3			
29	CBR27C10-BRG-ABT-017	EAST ABUTMENT REINFORCEMENT 4			
30	CBR27C10-BRG-PIR-001	PIER 1 FOOTING DETAILS			
31	CBR27C10-BRG-PIR-002	PIER 1 DETAILS			
32	CBR27C10-BRG-PIR-003	PIER 1 REINFORCEMENT 1			
33	CBR27C10-BRG-PIR-004	PIER 1 REINFORCEMENT 2			
34	CBR27C10-BRG-PIR-005	PIER 1 REINFORCEMENT 3			
35	CBR27C10-BRG-PIR-006	PIER 1 REINFORCEMENT 4			
36	CBR27C10-BRG-PIR-007	PIER 2 FOOTING DETAILS			
37	CBR27C10-BRG-PIR-008	PIER 2 DETAILS			
38	CBR27C10-BRG-PIR-009	PIER 2 REINFORCEMENT 1			
39	CBR27C10-BRG-PIR-010	PIER 2 REINFORCEMENT 2			
40	CBR27C10-BRG-PIR-011	PIER 2 REINFORCEMENT 3			
41	CBR27C10-BRG-PIR-012	PIER 2 REINFORCEMENT 4			
42	CBR27C10-BRG-PIR-013	PIER 3 FOOTING DETAILS			
43	CBR27C10-BRG-PIR-014	PIER 3 DETAILS			
44	CBR27C10-BRG-PIR-015	PIER 3 REINFORCEMENT 1			
45	CBR27C10-BRG-PIR-016	PIER 3 REINFORCEMENT 2			
46	CBR27C10-BRG-PIR-017	PIER 3 REINFORCEMENT 3			
47	CBR27C10-BRG-PIR-018	PIER 3 REINFORCEMENT 4			
48	CBR27C10-BRG-PIR-019	PIER 4 FOOTING DETAILS			
49	CBR27C10-BRG-PIR-020	PIER 4 DETAILS			
50	CBR27C10-BRG-PIR-021	PIER 4 REINFORCEMENT 1			
51	CBR27C10-BRG-PIR-022	PIER 4 REINFORCEMENT 2			
52	CBR27C10-BRG-PIR-023	PIER 4 REINFORCEMENT 3			
53	CBR27C10-BRG-PIR-024	PIER 4 REINFORCEMENT 4			
54	CBR27C10-BRG-PIR-025	BEARING DETAILS 1			
55	CBR27C10-BRG-PIR-026	BEARING DETAILS 2			
56	CBR27C10-BRG-PIR-027	BEARING REPLACEMENT DETAILS			
57	CBR27C10-BRG-SUP-001	SEGMENT DESIGNATION 1			
58	CBR27C10-BRG-SUP-002	SEGMENT DESIGNATION 2			
59	CBR27C10-BRG-SUP-003	SEGMENT DESIGNATION 3			
60	CBR27C10-BRG-SUP-004	SEGMENT DESIGNATION 4			
61	CBR27C10-BRG-SUP-005	SEGMENT DESIGNATION 5			

CIVIL CONSTRUCTION

SHT #	SHEET NAME	SHEET DESCRIPTION	STATION	STATION	REV
62	CBR27C10-BRG-SUP-006	SEGMENT DESIGNATION 6			
63	CBR27C10-BRG-SUP-007	SEGMENT DESIGNATION 7			
64	CBR27C10-BRG-SUP-008	SEGMENT DESIGNATION 8			
65	CBR27C10-BRG-SUP-009	SPANS 1 & 5 C.I.P. FRAMING PLAN			
66	CBR27C10-BRG-SUP-010	SPANS 1 & 5 C.I.P. SECTION DETAILS			
67	CBR27C10-BRG-SUP-011	SPAN 1 C.I.P. REINFORCEMENT 1			
68	CBR27C10-BRG-SUP-012	SPAN 1 C.I.P. REINFORCEMENT 2			
69	CBR27C10-BRG-SUP-013	SPAN 1 C.I.P. REINFORCEMENT 3			
70	CBR27C10-BRG-SUP-014	SPAN 5 C.I.P. REINFORCEMENT 1			
71	CBR27C10-BRG-SUP-015	SPAN 5 C.I.P. REINFORCEMENT 2			
72	CBR27C10-BRG-SUP-016	SPAN 5 C.I.P. REINFORCEMENT 3			
73	CBR27C10-BRG-SUP-017	CANTILEVER SEGMENT DETAILS			
74	CBR27C10-BRG-SUP-018	CANTILEVER SEGMENT REINFORCEMENT 1			
75	CBR27C10-BRG-SUP-019	CANTILEVER SEGMENT REINFORCEMENT 2			
76	CBR27C10-BRG-SUP-020	CANTILEVER SEGMENT REINFORCEMENT 3			
77	CBR27C10-BRG-SUP-021	CANTILEVER SEGMENT REINFORCEMENT 4			
78	CBR27C10-BRG-SUP-022	CLOSURE SEGMENT DETAILS			
79	CBR27C10-BRG-SUP-023	CLOSURE SEGMENT REINFORCEMENT 1			
80	CBR27C10-BRG-SUP-024	CLOSURE SEGMENT REINFORCEMENT 2			
81	CBR27C10-BRG-SUP-025	PIER TABLES 1 & 4 DETAILS			
82	CBR27C10-BRG-SUP-026	PIER TABLES 1 & 4 REINFORCEMENT 1			
83	CBR27C10-BRG-SUP-027	PIER TABLES 1 & 4 REINFORCEMENT 2			
84	CBR27C10-BRG-SUP-028	PIER TABLES 1 & 4 REINFORCEMENT 3			
85	CBR27C10-BRG-SUP-029	PIER TABLES 1 & 4 REINFORCEMENT 4			
86	CBR27C10-BRG-SUP-030	PIER TABLES 1 & 4 REINFORCEMENT 5			
87	CBR27C10-BRG-SUP-031	PIER TABLES 1 & 4 REINFORCEMENT 6			
88	CBR27C10-BRG-SUP-032	PIER TABLES 2 & 3 DETAILS			
89	CBR27C10-BRG-SUP-033	PIER TABLES 2 & 3 REINFORCEMENT 1			
90	CBR27C10-BRG-SUP-034	PIER TABLES 2 & 3 REINFORCEMENT 2			
91	CBR27C10-BRG-SUP-035	PIER TABLES 2 & 3 REINFORCEMENT 3			
92	CBR27C10-BRG-SUP-036	PIER TABLES 2 & 3 REINFORCEMENT 4			
93	CBR27C10-BRG-SUP-037	PIER TABLES 2 & 3 REINFORCEMENT 5			
94	CBR27C10-BRG-SUP-038	PIER TABLES 2 & 3 REINFORCEMENT 6			
95	CBR27C10-BRG-SUP-039	END DIAPHRAGM DETAILS			
96	CBR27C10-BRG-SUP-040	END DIAPHRAGM REINFORCEMENT 1			
97	CBR27C10-BRG-SUP-041	END DIAPHRAGM REINFORCEMENT 2			
98	CBR27C10-BRG-SUP-042	END DIAPHRAGM REINFORCEMENT 3			
99	CBR27C10-BRG-SUP-043	END DIAPHRAGM REINFORCEMENT 4			
100	CBR27C10-BRG-SUP-044	END DIAPHRAGM REINFORCEMENT 5			
101	CBR27C10-BRG-SUP-045	TYPE I DEVIATION RIB DETAILS			
102	CBR27C10-BRG-SUP-046	TYPE I DEVIATION RIB REINFORCEMENT 1			
103	CBR27C10-BRG-SUP-047	TYPE I DEVIATION RIB REINFORCEMENT 2			
104	CBR27C10-BRG-SUP-048	TYPE II DEVIATION RIB DETAILS			
105	CBR27C10-BRG-SUP-049	TYPE II DEVIATION RIB REINFORCEMENT 1			
106	CBR27C10-BRG-SUP-050	TYPE II DEVIATION RIB REINFORCEMENT 2			
107	CBR27C10-BRG-SUP-051	BOTTOM SLAB ANCHOR BLOCK DETAILS 1			
108	CBR27C10-BRG-SUP-052	BOTTOM SLAB ANCHOR BLOCK DETAILS 2			
109	CBR27C10-BRG-SUP-053	BULKHEAD DETAILS			
110	CBR27C10-BRG-SUP-054	CANTILEVER POST-TENSIONING LAYOUT 1			
111	CBR27C10-BRG-SUP-055	CANTILEVER POST-TENSIONING LAYOUT 2			
112	CBR27C10-BRG-SUP-056	CANTILEVER POST-TENSIONING LAYOUT 3			
113	CBR27C10-BRG-SUP-057	CANTILEVER POST-TENSIONING LAYOUT 4			
114	CBR27C10-BRG-SUP-058	CANTILEVER POST-TENSIONING DETAILS			
115	CBR27C10-BRG-SUP-059	CONTINUITY WEB P.T. LAYOUT 1			
116	CBR27C10-BRG-SUP-060	CONTINUITY WEB P.T. LAYOUT 2			
117	CBR27C10-BRG-SUP-061	CONTINUITY WEB P.T. LAYOUT 3			
118	CBR27C10-BRG-SUP-062	CONTINUITY WEB P.T. LAYOUT 4			
119	CBR27C10-BRG-SUP-063	CONTINUITY WEB P.T. LAYOUT 5			
120	CBR27C10-BRG-SUP-064	CONTINUITY POST-TENSIONING LAYOUT 1			
121	CBR27C10-BRG-SUP-065	CONTINUITY POST-TENSIONING LAYOUT 2			
122	CBR27C10-BRG-SUP-066	CONTINUITY POST-TENSIONING LAYOUT 3			
123	CBR27C10-BRG-SUP-067	CONTINUITY POST-TENSIONING LAYOUT 4			
124	CBR27C10-BRG-SUP-068	CONTINUITY POST-TENSIONING LAYOUT 5			
125	CBR27C10-BRG-SUP-069	PIER TABLE POST-TENSIONING DETAILS 1			
126	CBR27C10-BRG-SUP-070	PIER TABLE POST-TENSIONING DETAILS 2			
127	CBR27C10-BRG-SUP-071	PIER TABLE POST-TENSIONING DETAILS 3			
128	CBR27C10-BRG-SUP-072	END DIAPHRAGM P.T. DETAILS 1			
129	CBR27C10-BRG-SUP-073	END DIAPHRAGM P.T. DETAILS 2			
130	CBR27C10-BRG-SUP-074	END DIAPHRAGM P.T. DETAILS 3			
131	CBR27C10-BRG-SUP-075	FUTURE POST-TENSIONING LAYOUT 1			
132	CBR27C10-BRG-SUP-076	FUTURE POST-TENSIONING LAYOUT 2			
133	CBR27C10-BRG-SUP-077	LONGITUDINAL P.T. STRESSING SCHEDULE 1			
134	CBR27C10-BRG-SUP-078	LONGITUDINAL P.T. STRESSING SCHEDULE 2			

CIVIL CONSTRUCTION

SHT #	SHEET NAME	SHEET DESCRIPTION	STATION	STATION	REV
135	CBR27C10-BRG-SUP-079	TRANSVERSE POST-TENSIONING DETAILS			
136	CBR27C10-BRG-SUP-080	P.T. GROUTING & PROTECTION DETAILS 1			
137	CBR27C10-BRG-SUP-081	P.T. GROUTING & PROTECTION DETAILS 2			
138	CBR27C10-BRG-SUP-082	MISC. SUPERSTRUCTURE DETAILS 1			
139	CBR27C10-BRG-SUP-083	MISC. SUPERSTRUCTURE DETAILS 2			
140	CBR27C10-BRG-SUP-084	MISC. SUPERSTRUCTURE DETAILS 3			
141	CBR27C10-BRG-SUP-085	SUPERSTRUCTURE CONST. SCHEME 1			
142	CBR27C10-BRG-SUP-086	SUPERSTRUCTURE CONST. SCHEME 2			
143	CBR27C10-BRG-SUP-087	SUPERSTRUCTURE CONST. SCHEME 3			
144	CBR27C10-BRG-SUP-088	SUPERSTRUCTURE CONST. SCHEME 4			
145	CBR27C10-BRG-EXP-001	EXPANSION JOINT DEVICE DETAILS 1			
146	CBR27C10-BRG-EXP-002	EXPANSION JOINT DEVICE DETAILS 2			
147	CBR27C10-BRG-RAL-001	WIRE FENCE DETAILS			
148	CBR27C10-BRG-RAL-002	SOUND BARRIER DETAILS			
149	CBR27C10-BRG-RAL-003	EMERGENCY WALKWAY DETAILS			
150	CBR27C10-BRG-RAL-004	O.C.S. POLE SUPPORT DETAILS			
151	CBR27C10-BRG-DTL-001	STRAY CURRENT DETAILS 1			
152	CBR27C10-BRG-DTL-002	STRAY CURRENT DETAILS 2			
153	CBR27C10-BRG-DTL-003	DRAINAGE DETAILS 1			
154	CBR27C10-BRG-DTL-004	DRAINAGE DETAILS 2			
155	CBR27C10-BRG-DTL-005	DRAINAGE DETAILS 3			
156	CBR27C10-BRG-DTL-006	DRAINAGE DETAILS 4			
157	CBR27C10-BRG-DTL-007	DRAINAGE DETAILS 5			
158	CBR27C10-BRG-DTL-008	DRAINAGE DETAILS 6			
159	CBR27C10-BRG-DTL-009	BRIDGE DETAILS 1			
160	CBR27C10-BRG-DTL-010	BRIDGE DETAILS 2			
161	CBR27C10-BRG-DTL-011	AS-BUILT BRIDGE DATA			
162	CBR27C10-BRG-SUR-001	BRIDGE SURVEY 1			
163	CBR27C10-BRG-SUR-002	BRIDGE SURVEY 2			
164	CBR27C10-BRG-SUR-003	BRIDGE SURVEY 3			
165	CBR27C10-BRG-SUR-004	BRIDGE SURVEY PLAN 1			
166	CBR27C10-BRG-BOR-001	BRIDGE SURVEY PLAN 2			
167	CBR27C10-BRG-BOR-002	BRIDGE SURVEY PLAN 3			
168	CBR27C10-BRG-BOR-003	BRIDGE SURVEY PLAN 4			
169	CBR27C10-BRG-BOR-004	BRIDGE SURVEY PROFILE 1			
170	CBR27C10-BRG-BOR-005	BRIDGE SURVEY PROFILE 2			
171	CBR27C10-BRG-BOR-006	BRIDGE SURVEY PROFILE 3			
172	CBR27C10-BRG-BOR-007	BRIDGE SURVEY PROFILE 4			
173	CBR27C10-BRG-BOR-008	BRIDGE SURVEY PROFILE 5			
174	CBR27C10-BRG-BOR-009	BRIDGE SURVEY PROFILE 6			
		BLAKE RD PEDESTRIAN UNDERPASS - BRIDGE 27J60			
1	CBR27J60-GPE-001	GENERAL PLAN AND ELEVATION			
2	CBR27J60-TRN-001	TRANSVERSE SECTION AND QUANTITIES			
3	CBR27J60-LYT-001	UNDERPASS LAYOUT			
4	CBR27J60-DTL-001	UNDERPASS DETAILS AND REINF. 1			
5	CBR27J60-DTL-002	UNDERPASS DETAILS AND REINF. 2			
6	CBR27J60-TRN-002	HEADWALL DETAILS 1			
7	CBR27J60-TRN-003	HEADWALL DETAILS 2			
8	CBR27J60-DTL-003	HEADWALL REINFORCEMENT 1			
9	CBR27J60-DTL-004	HEADWALL REINFORCEMENT 2			
10	CBR27J60-TRN-004	WEST APPROACH DETAILS 1			
11	CBR27J60-DTL-005	WEST APPROACH DETIALS 2			
12	CBR27J60-TRN-005	WEST APPROACH WALL DETAILS			
13	CBR27J60-DTL-006	WEST APPROACH REINFORCEMENT 1			
14	CBR27J60-DTL-007	WEST APPROACH REINFORCEMENT 2			
15	CBR27J60-DTL-008	WEST APPROACH WALL REINFORCEMENT			
16	CBR27J60-DTL-009	WEST APPROACH STAIR DETAILS 1			
17	CBR27J60-DTL-010	WEST APPROACH STAIR DETAILS 2			
18	CBR27J60-TRN-006	EAST APPROACH DETIALS 1			
19	CBR27J60-DTL-011	EAST APPROACH DETAILS 2			
20	CBR27J60-TRN-007	EAST APPROACH WALL DETAILS			
21	CBR27J60-DTL-012	EAST APPROACH REINFORCEMENT 1			
22	CBR27J60-DTL-013	EAST APPROACH REINFORCEMENT 2			
23	CBR27J60-DTL-014	EAST APPROACH WALL REINFORCEMENT			
24	CBR27J60-TRN-008	REINFORCEMENT BAR LIST 1			
25	CBR27J60-TRN-009	REINFORCEMENT BAR LIST 2			
26	CBR27J60-DTL-015	BRIDGE DETAILS			
27	CBR27J60-DTL-016	CONCRETE PARAPET (TYPE P-1)			
28	CBR27J60-DTL-017	MODIFIED CONCRETE PARAPET (TYPE P-1)			
29	CBR27J60-DTL-018	AS-BUILT BRIDGE DATA			
30	CBR27J60-SUR-001	BRIDGE SURVEY 1			
31	CBR27J60-SUR-002	BRIDGE SURVEY 2			

NO.	DATE	BY	CHECK	DESIGN	REVISION / SUBMITTAL

AECOM

90% SUBMISSION - 01/22/16

METROPOLITAN COUNCIL

SOUTHWEST Green Line LRT Extension

CIVIL - VOLUME 4D
GENERAL
VOLUME INDEX OF PLAN SHEETS
SHEET 1

DISCIPLINE: **GENERAL**

SHEET NAME: **00-GEN-IDX-001**

SHEET **2** OF **354**

Jan, 21 2016 05:35 pm v:\3400_ADC\CAD\CAD MANAGEMENT\DRAWING LIST\COVER SHEETS 90%\90% GEN-IDX_VOL_04.dwg By: v-kriewamr

CIVIL CONSTRUCTION

SHT #	SHEET NAME	SHEET DESCRIPTION	STATION	STATION	REV
		VOLUME 4D - BRIDGES (cont'd)			
32	CBR27J60-BOR-001	BRIDGE SURVEY PLAN			
33	CBR27J60-BOR-002	BRIDGE SURVEY PROFILE 1			
34	CBR27J60-BOR-003	BRIDGE SURVEY PROFILE 2			
35	CBR27J60-BOR-004	BRIDGE SURVEY PROFILE 3			
36	CBR27J60-STG-001	STAGING PLAN 1			
37	CBR27J60-STG-002	STAGING PLAN 2			
		MINNEHAHA CREEK FREIGHT - BRIDGE R0688			
1	CBRR0688-BRG-GPE-001	GENERAL PLAN AND ELEVATION			
2	CBRR0688-BRG-SUP-001	TRANSVERSE SECTION AND QUANTITIES			
3	CBRR0688-BRG-SUP-003	BRIDGE LAYOUT			
4	CBRR0688-BRG-ABT-001	WEST ABUTMENT DETAILS 1			
5	CBRR0688-BRG-ABT-002	WEST ABUTMENT DETAILS 2			
6	CBRR0688-BRG-ABT-003	WEST ABUTMENT DETAILS 3			
7	CBRR0688-BRG-ABT-004-1	WEST ABUTMENT REINFORCEMENT 1			
8	CBRR0688-BRG-ABT-004-2	WEST ABUTMENT REINFORCEMENT 2			
9	CBRR0688-BRG-ABT-004-3	WEST ABUTMENT REINFORCEMENT 3			
10	CBRR0688-BRG-ABT-004-4	WEST ABUTMENT REINFORCEMENT 4			
11	CBRR0688-BRG-ABT-011	EAST ABUTMENT DETAILS 1			
12	CBRR0688-BRG-ABT-012	EAST ABUTMENT DETAILS 2			
13	CBRR0688-BRG-ABT-013	EAST ABUTMENT DETAILS 3			
14	CBRR0688-BRG-ABT-014-1	EAST ABUTMENT REINFORCEMENT 1			
15	CBRR0688-BRG-ABT-014-2	EAST ABUTMENT REINFORCEMENT 2			
16	CBRR0688-BRG-ABT-014-3	EAST ABUTMENT REINFORCEMENT 3			
17	CBRR0688-BRG-ABT-014-4	EAST ABUTMENT REINFORCEMENT 4			
18	CBRR0688-BRG-SUP-004	FRAMING PLAN			
19	CBRR0688-BRG-STL-001	GIRDER ELEVATION			
20	CBRR0688-BRG-STL-003	GIRDER DETAILS 1			
21	CBRR0688-BRG-STL-004	GIRDER DETAILS 2			
22	CBRR0688-BRG-SUP-007	SUPERSTRUCTURE DETAILS 1			
23	CBRR0688-BRG-SUP-005	SUPERSTRUCTURE DETAILS 2			
24	CBRR0688-BRG-SUP-006	SUPERSTRUCTURE DETAILS 3			
25	CBRR0688-BRG-SUP-009	SUPERSTRUCTURE DETAILS 4			
26	CBRR0688-BRG-SUP-008	SUPERSTRUCTURE DETAILS 5			
27	CBRR0688-BRG-STL-005	SUPERSTRUCTURE DETAILS 6			
28	CBRR0688-BRG-DTL-003	WIRE FENCE (DESIGN W-1)			
29	CBRR0688-BRG-EXP-001	JOINT DETAILS 1			
30	CBRR0688-BRG-EXP-002	JOINT DETAILS 2			
31	CBRR0688-BRG-DTL-004-1	DECK DRAINAGE AND WATERPROOFING 1			
32	CBRR0688-BRG-DTL-004-2	DECK DRAINAGE AND WATERPROOFING 2			
33	CBRR0688-BRG-EXP-003	BEARING ASSEMBLY DETAILS			
34	CBRR0688-BRG-DTL-005	BRIDGE DETAILS 1			
35	CBRR0688-BRG-DTL-006	BRIDGE DETAILS 2			
36	CBRR0688-BRG-DTL-007	AS-BUILT BRIDGE DATA			
37	CBRR0688-BRG-SUR-001	BRIDGE SURVEY			
38	CBRR0688-BRG-BOR-001	BRIDGE SURVEY PLAN			
39	CBRR0688-BRG-BOR-002	BRIDGE SURVEY PROFILE 1			
40	CBRR0688-BRG-BOR-003	BRIDGE SURVEY PROFILE 2			
41	CBRR0688-BRG-BOR-004	BRIDGE SURVEY PROFILE 3			
42	CBRR0688-BRG-STG-001	STAGING PLAN 1			
43	CBRR0688-BRG-STG-002	STAGING PLAN 2			
44	CBRR0688-BRG-STG-003	STAGING PLAN 3			
45	CBRR0688-BRG-STG-004	STAGING PLAN 4			
		MINNEHAHA CREEK TRAIL - BRIDGE R0687			
1	CBRR0687-BRG-GPE-001	GENERAL PLAN AND ELEVATION			
2	CBRR0687-BRG-TRN-001	TRANSVERSE SECTION AND QUANTITIES			
3	CBRR0687-BRG-SUP-001	BRIDGE LAYOUT			
4	CBRR0687-BRG-ABT-001-1	WEST ABUTMENT DETAILS 1			
5	CBRR0687-BRG-ABT-001-2	WEST ABUTMENT DETAILS 2			
6	CBRR0687-BRG-ABT-001-3	WEST ABUTMENT DETAILS 3			
7	CBRR0687-BRG-ABT-001-4	WEST ABUTMENT DETAILS 4			
8	CBRR0687-BRG-ABT-001-5	WEST ABUTMENT REINFORCEMENT 1			
9	CBRR0687-BRG-ABT-001-6	WEST ABUTMENT REINFORCEMENT 2			
10	CBRR0687-BRG-ABT-001-7	WEST ABUTMENT REINFORCEMENT 3			
11	CBRR0687-BRG-ABT-001-8	WEST ABUTMENT REINFORCEMENT 4			
12	CBRR0687-BRG-ABT-001-9	WEST ABUTMENT REINFORCEMENT 5			
13	CBRR0687-BRG-ABT-002-1	EAST ABUTMENT DETAILS 1			
14	CBRR0687-BRG-ABT-002-2	EAST ABUTMENT DETAILS 2			
15	CBRR0687-BRG-ABT-002-3	EAST ABUTMENT DETAILS 3			

CIVIL CONSTRUCTION

SHT #	SHEET NAME	SHEET DESCRIPTION	STATION	STATION	REV
16	CBRR0687-BRG-ABT-002-4	EAST ABUTMENT DETAILS 4			
17	CBRR0687-BRG-ABT-002-5	EAST ABUTMENT REINFORCEMENT 1			
18	CBRR0687-BRG-ABT-002-6	EAST ABUTMENT REINFORCEMENT 2			
19	CBRR0687-BRG-ABT-002-7	EAST ABUTMENT REINFORCEMENT 3			
20	CBRR0687-BRG-ABT-002-8	EAST ABUTMENT REINFORCEMENT 4			
21	CBRR0687-BRG-ABT-002-9	EAST ABUTMENT REINFORCEMENT 5			
22	CBRR0687-BRG-SUP-002	FRAMING PLAN			
23	CBRR0687-BRG-PCB-001	36" PRESTRESSED CONCRETE BEAM			
24	CBRR0687-BRG-SUP-003-1	SUPERSTRUCTURE DETAILS 1			
25	CBRR0687-BRG-SUP-003-2	SUPERSTRUCTURE DETAILS 2			
26	CBRR0687-BRG-SUP-003-3	SUPERSTRUCTURE DETAILS 3			
27	CBRR0687-BRG-SUP-003-4	SUPERSTRUCTURE DETAILS 4			
28	CBRR0687-BRG-RAL-001-1	CONCRETE PARAPET (TYPE P-1)			
29	CBRR0687-BRG-RAL-001-2	WIRE FENCE (DESIGN W-1)			
30	CBRR0687-BRG-EXP-001	WATERPROOF EXPANSION DEVICE			
31	CBRR0687-BRG-DTL-001	APPROACH PANEL DETAILS			
32	CBRR0687-BRG-DTL-002	RIPRAP SLOPE WITH GEOTEXTILE			
33	CBRR0687-BRG-DTL-003-1	BRIDGE DETAILS 1			
34	CBRR0687-BRG-DTL-003-2	BRIDGE DETAILS 2			
35	CBRR0687-BRG-DTL-003-3	BRIDGE DETAILS 3			
36	CBRR0687-BRG-DTL-003-4	BRIDGE DETAILS 4			
37	CBRR0687-BRG-DTL-003-5	BRIDGE DETAILS 5			
38	CBRR0687-BRG-DTL-004	AS-BUILT BRIDGE DATA			
39	CBRR0687-BRG-SUR-001	BRIDGE SURVEY			
40	CBRR0687-BRG-BOR-001	BRIDGE SURVEY PLAN			
41	CBRR0687-BRG-BOR-002-1	BRIDGE SURVEY PROFILE 1			
42	CBRR0687-BRG-BOR-002-2	BRIDGE SURVEY PROFILE 2			
43	CBRR0687-BRG-STG-001-1	STAGING PLAN 1			
44	CBRR0687-BRG-STG-001-2	STAGING PLAN 2			
45	CBRR0687-BRG-STG-001-3	STAGING PLAN 3			
46	CBRR0687-BRG-STG-001-4	STAGING PLAN 4			
		MINNEHAHA CREEK LRT - BRIDGE R0689			
1	CBRR0689-BRG-GPE-001	GENERAL PLAN AND ELEVATION			
2	CBRR0689-BRG-TRN-001	TRANSVERSE SECTION AND QUANTITIES			
3	CBRR0689-BRG-TRN-002	STRAY CURRENT/CORROSION CONTROL NOTES			
4	CBRR0689-BRG-SUP-001	BRIDGE LAYOUT			
5	CBRR0689-BRG-ABT-001	WEST ABUTMENT DETAILS 1			
6	CBRR0689-BRG-ABT-002	WEST ABUTMENT DETAILS 2			
7	CBRR0689-BRG-ABT-003	WEST ABUTMENT DETAILS 3			
8	CBRR0689-BRG-ABT-004	WEST ABUTMENT DETAILS 4			
9	CBRR0689-BRG-ABT-005	WEST ABUTMENT REINFORCEMENT 1			
10	CBRR0689-BRG-ABT-006	WEST ABUTMENT REINFORCEMENT 2			
11	CBRR0689-BRG-ABT-007	WEST ABUTMENT REINFORCEMENT 3			
12	CBRR0689-BRG-ABT-008	WEST ABUTMENT REINFORCEMENT 4			
13	CBRR0689-BRG-ABT-009	WEST ABUTMENT REINFORCEMENT 5			
14	CBRR0689-BRG-ABT-010	EAST ABUTMENT DETAILS 1			
15	CBRR0689-BRG-ABT-011	EAST ABUTMENT DETAILS 2			
16	CBRR0689-BRG-ABT-012	EAST ABUTMENT DETAILS 3			
17	CBRR0689-BRG-ABT-013	EAST ABUTMENT DETAILS 4			
18	CBRR0689-BRG-ABT-014	EAST ABUTMENT REINFORCEMENT 1			
19	CBRR0689-BRG-ABT-015	EAST ABUTMENT REINFORCEMENT 2			
20	CBRR0689-BRG-ABT-016	EAST ABUTMENT REINFORCEMENT 3			
21	CBRR0689-BRG-ABT-017	EAST ABUTMENT REINFORCEMENT 4			
22	CBRR0689-BRG-ABT-018	EAST ABUTMENT REINFORCEMENT 5			
23	CBRR0689-BRG-SUP-002	FRAMING PLAN			
24	CBRR0689-BRG-PCB-001	MN54 PRESTRESSED CONCRETE BEAM			
25	CBRR0689-BRG-SUP-003	SUPERSTRUCTURE DETAILS 1			
26	CBRR0689-BRG-SUP-004	SUPERSTRUCTURE DETAILS 2			
27	CBRR0689-BRG-SUP-005	SUPERSTRUCTURE DETAILS 3			
28	CBRR0689-BRG-SUP-006	SUPERSTRUCTURE DETAILS 4			
29	CBRR0689-BRG-RAL-001	CONCRETE PARAPET (TYPE P-1)			
30	CBRR0689-BRG-RAL-002	WIRE FENCE (DESIGN W-1)			
31	CBRR0689-BRG-EXP-001	WATERPROOF EXPANSION DEVICE			
32	CBRR0689-BRG-DTL-001	DECK DRAINAGE AND WATERPROOFING 1			
33	CBRR0689-BRG-DTL-002	DECK DRAINAGE AND WATERPROOFING 2			
34	CBRR0689-BRG-DTL-003	RIPRAP SLOPE WITH GEOTEXTILE FILTER			
35	CBRR0689-BRG-DTL-004	BRIDGE DETAILS 1			
36	CBRR0689-BRG-DTL-005	BRIDGE DETAILS 2			
37	CBRR0689-BRG-DTL-006	BRIDGE DETAILS 3			
38	CBRR0689-BRG-DTL-007	BRIDGE DETAILS 4			

CIVIL CONSTRUCTION

SHT #	SHEET NAME	SHEET DESCRIPTION	STATION	STATION	REV
39	CBRR0689-BRG-DTL-008	BRIDGE DETAILS 5			
40	CBRR0689-BRG-DTL-009	AS-BUILT BRIDGE DATA			
41	CBRR0689-BRG-SUR-001	BRIDGE SURVEY			
42	CBRR0689-BRG-BOR-001	BRIDGE SURVEY PLAN			
43	CBRR0689-BRG-BOR-002	BRIDGE SURVEY PROFILE			
44	CBRR0689-BRG-STG-001	STAGING PLAN 1			
45	CBRR0689-BRG-STG-002	STAGING PLAN 2			

NO.	DATE	BY	CHECK	DESIGN	REVISION / SUBMITTAL

AECOM

90% SUBMISSION - 01/22/16

METROPOLITAN COUNCIL

SOUTHWEST Green Line LRT Extension

CIVIL - VOLUME 4D
GENERAL
VOLUME INDEX OF PLAN SHEETS
SHEET 2

DISCIPLINE: GENERAL

SHEET NAME: 00-GEN-IDX-002

SHEET 3 OF 354

Jan, 21 2016 05:35 pm V:\3400_ADC\CAD\CAD MANAGEMENT\DRAWING LIST\COVER SHEETS 90%\90% GEN-IDX_VOL_04.dwg By: v-kriewamr

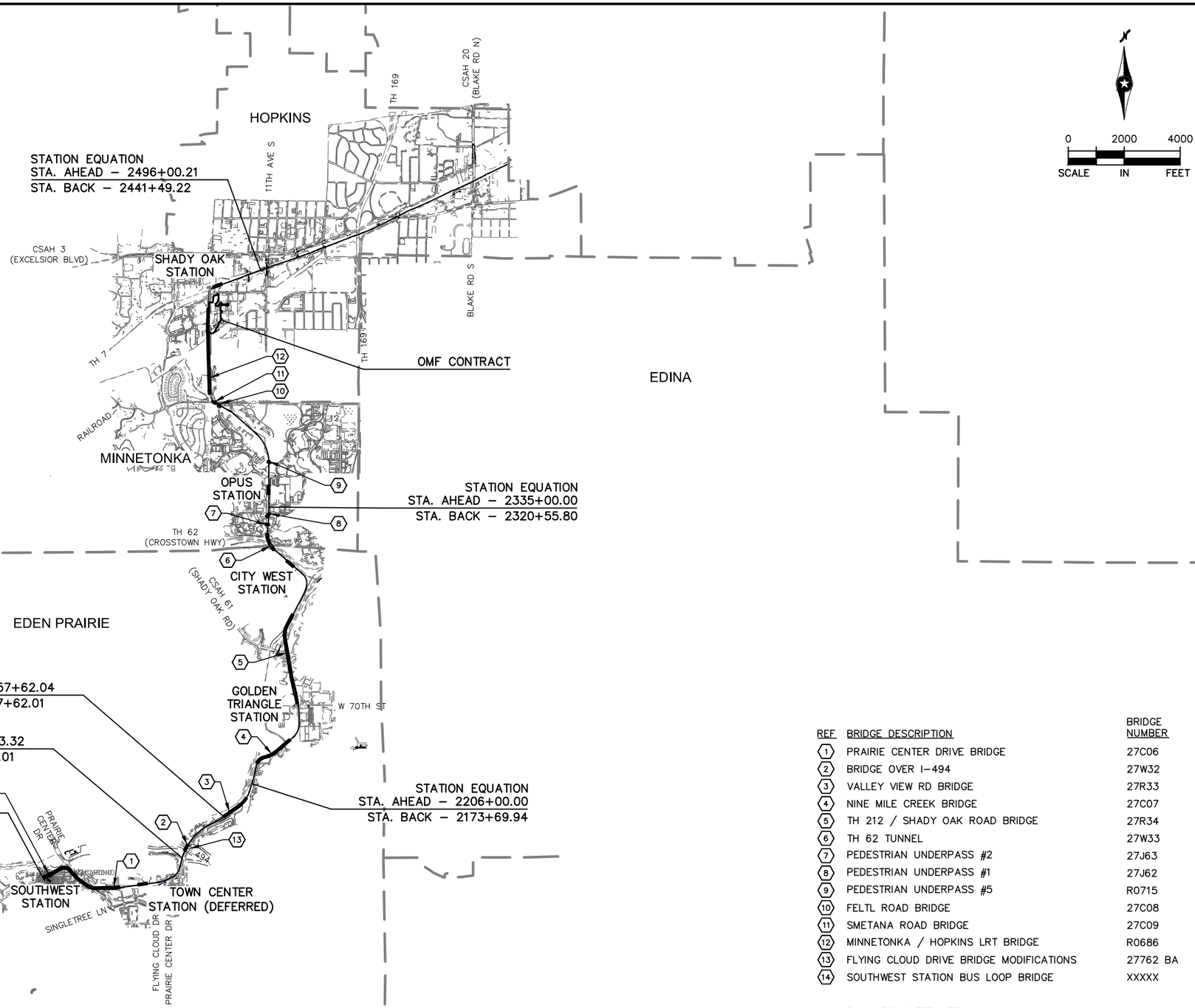

REF	BRIDGE DESCRIPTION	BRIDGE NUMBER
1	PRAIRIE CENTER DRIVE BRIDGE	27C06
2	BRIDGE OVER I–494	27W32
3	VALLEY VIEW RD BRIDGE	27R33
4	NINE MILE CREEK BRIDGE	27C07
5	TH 212 / SHADY OAK ROAD BRIDGE	27R34
6	TH 62 TUNNEL	27W33
7	PEDESTRIAN UNDERPASS #2	27J63
8	PEDESTRIAN UNDERPASS #1	27J62
9	PEDESTRIAN UNDERPASS #5	R0715
10	FELTL ROAD BRIDGE	27C08
11	SMETANA ROAD BRIDGE	27C09
12	MINNETONKA / HOPKINS LRT BRIDGE	R0686
13	FLYING CLOUD DRIVE BRIDGE MODIFICATIONS	27762 BA
14	SOUTHWEST STATION BUS LOOP BRIDGE	XXXXX

BA – BID ALTERNATE

NO.	DATE	BY	CHECK	DESIGN	REVISION / SUBMITTAL

AECOM

90% SUBMISSION - 01/22/16

METROPOLITAN COUNCIL

SOUTHWEST Green Line LRT Extension

CIVIL - VOLUME 4D
GENERAL
KEY MAP
SHEET 1

DISCIPLINE: GENERAL

SHEET NAME: W0-GEN-KEY-001

SHEET 4 OF 354

Jan, 16 2016 03:48 pm V:\3400_ADC\CAD\CAD MANAGEMENT\DRAWING LIST\COVER SHEETS 90%\W0-GEN-KEY.dwg By: V-KriewaMR

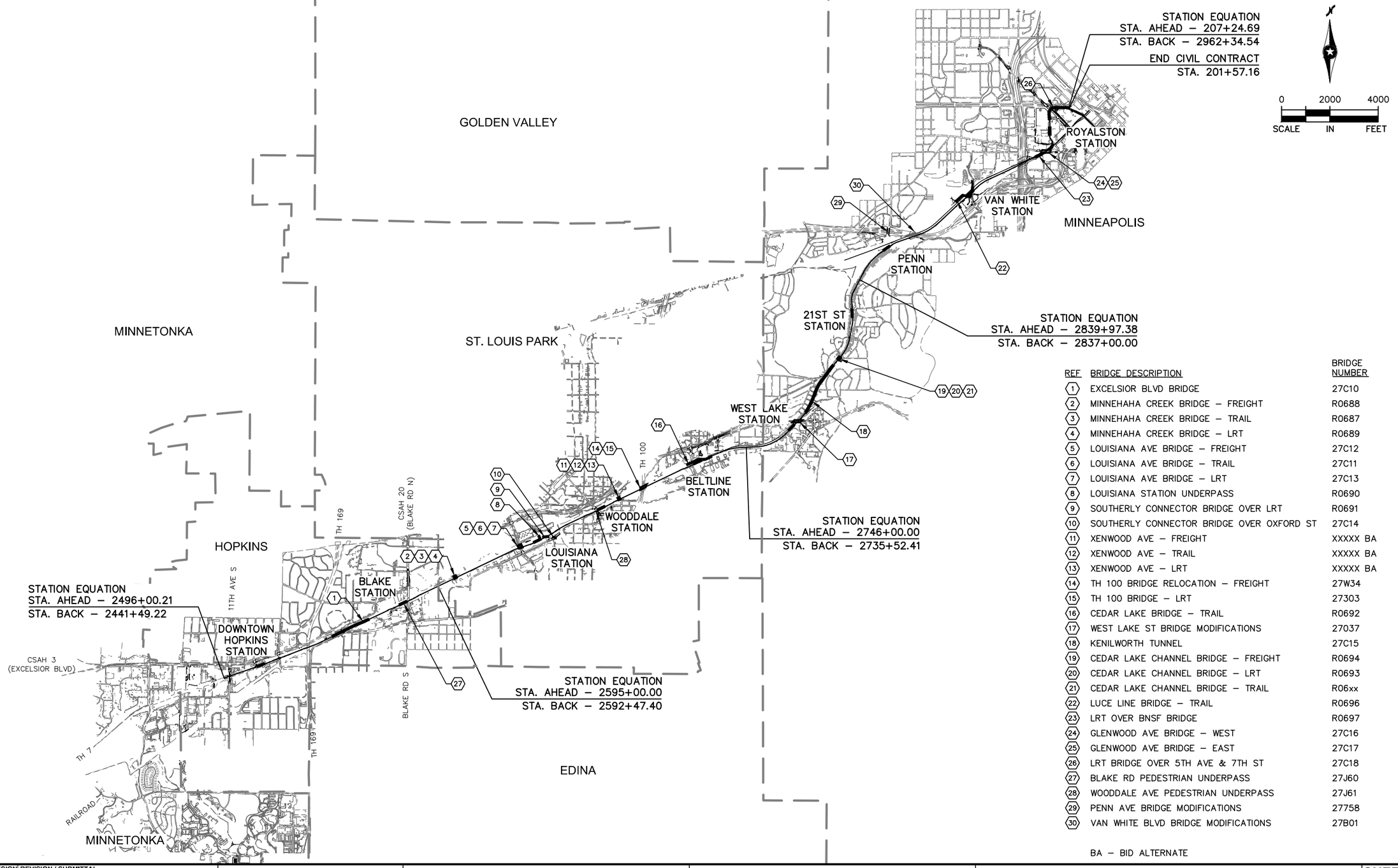

REF	BRIDGE DESCRIPTION	BRIDGE NUMBER
1	EXCELSIOR BLVD BRIDGE	27C10
2	MINNEHAHA CREEK BRIDGE – FREIGHT	R0688
3	MINNEHAHA CREEK BRIDGE – TRAIL	R0687
4	MINNEHAHA CREEK BRIDGE – LRT	R0689
5	LOUISIANA AVE BRIDGE – FREIGHT	27C12
6	LOUISIANA AVE BRIDGE – TRAIL	27C11
7	LOUISIANA AVE BRIDGE – LRT	27C13
8	LOUISIANA STATION UNDERPASS	R0690
9	SOUTHERLY CONNECTOR BRIDGE OVER LRT	R0691
10	SOUTHERLY CONNECTOR BRIDGE OVER OXFORD ST	27C14
11	XENWOOD AVE – FREIGHT	XXXXX BA
12	XENWOOD AVE – TRAIL	XXXXX BA
13	XENWOOD AVE – LRT	XXXXX BA
14	TH 100 BRIDGE RELOCATION – FREIGHT	27W34
15	TH 100 BRIDGE – LRT	27303
16	CEDAR LAKE BRIDGE – TRAIL	R0692
17	WEST LAKE ST BRIDGE MODIFICATIONS	27037
18	KENILWORTH TUNNEL	27C15
19	CEDAR LAKE CHANNEL BRIDGE – FREIGHT	R0694
20	CEDAR LAKE CHANNEL BRIDGE – LRT	R0693
21	CEDAR LAKE CHANNEL BRIDGE – TRAIL	R06xx
22	LUCE LINE BRIDGE – TRAIL	R0696
23	LRT OVER BNSF BRIDGE	R0697
24	GLENWOOD AVE BRIDGE – WEST	27C16
25	GLENWOOD AVE BRIDGE – EAST	27C17
26	LRT BRIDGE OVER 5TH AVE & 7TH ST	27C18
27	BLAKE RD PEDESTRIAN UNDERPASS	27J60
28	WOODDALE AVE PEDESTRIAN UNDERPASS	27J61
29	PENN AVE BRIDGE MODIFICATIONS	27758
30	VAN WHITE BLVD BRIDGE MODIFICATIONS	27B01

BA – BID ALTERNATE

NO.	DATE	BY	CHECK	DESIGN	REVISION / SUBMITTAL

AECOM

90% SUBMISSION - 01/22/16

METROPOLITAN COUNCIL

SOUTHWEST Green Line LRT Extension

CIVIL - VOLUME 4D
GENERAL
KEY MAP
SHEET 2

DISCIPLINE: GENERAL

SHEET NAME: E0-GEN-KEY-002

SHEET 5 OF 354

Jan, 16 2016 03:49 pm V:\3400_ADC\CAD\CAD MANAGEMENT\DRAWING LIST\COVER SHEETS 90%\E0-GEN-KEY.dwg By: V-KriewaMR

SYMBOLS

- PROPOSED DIRECTIONAL LANE USE
- EXISTING DIRECTIONAL LANE USE
- FLASHER (FREIGHT & PEDESTRIAN)
- CROSSING GATE (FREIGHT & LRT)
- CANTILEVER SIGNAL
- RAIL TURNOUT
- RAIL CROSSOVER (DOUBLE)
- RAIL CROSSOVER (SINGLE)
- POINT OF SWITCH (PS)
- OCS POLE FOUNDATION
- RAIL LUBRICATOR
- POINT OF INTERSECTION (PI)
- W2–200 — RAILROAD CURVE NUMBER
- ACCESSIBLE PEDESTRIAN CURB RAMP (DESIGN VARIES)
- HANDICAP PARKING STALL
- TACTILE WARNING STRIP
- TPSS BUILDING (TPSS–SW###) – NIC
  TUNNEL SYSTEMS HOUSE (TSY–SW###) – NIC
- SIGNAL / COMMUNICATION HOUSE – NIC
- STORM SEWER MANHOLE
- STORM SEWER CATCH BASIN
- STORM SEWER FLARED END SECTION
- STORM SEWER CLEAN–OUT
- STORM SEWER PUMP STATION
- DTXX / INV XXX.XX — DRAINTILE ID
- XXXX – ST — STORM SEWER STRUCTURE ID
- C / E — BUS SHELTER
- ROADWAY / PEDESTRIAN LIGHT

LINETYPES

- ROADWAY ℄
- TRACK ℄ (LRT)
- TRACK ℄ (FRT)
- RETAINING WALL
- BALLAST CURB
- TUNNEL WALL
- FENCE
- EX ROW
- PROP ROW
- PROP TCE
- PROP PE
- FENCE / RAILING
- ID – ID — FREIGHT INTRUSION DETECTION
- CONCRETE CURB AND GUTTER
- TRAIL (WIDTH VARIES)
- SIDEWALK
- DRIVEWAY
- BRIDGE
- SAWCUT
- DELINEATED WETLAND
- BMP (NWL) WATER EDGE
- PROPOSED FLOODPLAIN MITIGATION AREA
- SILT FENCE
- BALE BARRIER
- STORM SEWER
- CASING PIPE
- PIPE REMOVAL
- STRUCTURE REMOVAL
- FLOATING SILT FENCE
- SUPER DUTY SILT FENCE
- CONSTRUCTION LIMITS
- ROCK WEEPER
- DIVERSION DITCH
- OVERLAND FLOW
- CROSSWALK
- STOP BAR
- MEDIAN NOSE
- EP-EP-18 — WETLAND ID

CONSTRUCTION PACKAGE NOTE

NOTE: THE SWLRT CONSTRUCTION IS BEING IMPLEMENTED THROUGH THREE MAIN CONSTRUCTION PACKAGES; CIVIL, SYSTEMS & TUNNEL FACILITIES (SYS), AND OPERATIONS & MAINTENANCE FACILITY (OMF). CERTAIN SYS AND OMF SYMBOLS ARE SHOWN ON THE CIVIL CONTRACT PLANS FOR INFORMATION ONLY AND CERTAIN FACILITIES ARE NOT PART OF THE CIVIL CONTRACT.

Jan, 18 2016 07:43 am V:\3400_ADC\CAD\CAD MANAGEMENT\DRAWING LIST\COVER SHEETS 90%\CIV-GEN-NTS.dwg By: V-KriewaMR

NO.	DATE	BY	CHECK	DESIGN	REVISION / SUBMITTAL

AECOM

90% SUBMISSION - 01/22/16

METROPOLITAN COUNCIL

SOUTHWEST Green Line LRT Extension

CIVIL - VOLUME 4D
GENERAL
NOTES, ABBREVIATIONS, AND SYMBOLS
SHEET 1

DISCIPLINE: GENERAL

SHEET NAME: 00-GEN-NTS-001

SHEET 6 OF 354

ABBREVIATIONS

3-2 (EG)	SIGNAL HEAD NUMBER (PHASE 3, NO. 2)
AD	ALGEBRAIC DIFFERENCE
AVE	AVENUE
AWF	ADVANCE WARNING FLASHER
BA	BID ALTERNATE
BGN	BEGIN
BP	BEGINNING POINT
BVCE	BEGINNING VERTICAL CURVE ELEVATION
BVCS	BEGINNING VERTICAL CURVE STATION
BLVD	BOULEVARD
BMP	BEST MANAGEMENT PRACTICE
BNSF	BURLINGTON NORTHERN SANTA FE RAILWAY
C&G	CURB AND GUTTER
℄	CENTERLINE
CB	CATCH BASIN
CE	CLEARANCE ENVELOPE
CIR	CIRCLE
CO	DRAINTILE CLEANOUT STRUCTURE
CP	CANADIAN PACIFIC
CPRAIL	CANADIAN PACIFIC RAILWAY
CS	CURVE TO SPIRAL
CSAH	COUNTY STATE AID HIGHWAY
D&U	DRAINAGE AND UTILITY
DF	DIRECT FIXATION
DR	DRIVE
DT	DRAINTILE
DTL	DETAIL
DWY	DRIVEWAY
E	EAST
Ea	ACTUAL SUPERELEVATION (INCHES)
EB	EAST BOUND
EL or ELEV	ELEVATION
EP	ENDING POINT
ESMT	EASEMENT
Eu	UNBALANCED SUPERELEVATION (INCHES)
EVCE	ENDING VERTICAL CURVE ELEVATION
EVCS	ENDING VERTICAL CURVE STATION
EVP	EMERGENCY VEHICLE PRE-EMPTION
EX	EXISTING
FES	FLARED END SECTION
FYA	FLASHING YELLOW ARROW
GR RD	GROUND ROD
GRN	GREEN INDICATION
HCRRA	HENNEPIN COUNTY REGIONAL RAILROAD AUTHORITY
INL	BRIDGE DRAIN INLET
INS GR	INSULATED GROUND
IP	INPLACE
LED	LIGHT EMITTING DIODE
LH	LEFT HAND
LN	LANE
LRCI	LOCALLY REQUESTED CAPITAL INVESTMENT
LRT	LIGHT RAIL TRANSIT
LRV	LIGHT RAIL VEHICLE
LT	LEFT
LUM	LUMINAIRE
L_c	CURVE LENGTH (FEET)
L_s	SPIRAL LENGTH (FEET)
MIN	MINIMUM
MPH	MILES PER HOUR
MPLS	CITY OF MINNEAPOLIS
MPRB	MINNEAPOLIS PARK AND RECREATION BOARD
N	NORTH
NB	NORTH BOUND
NIC	NOT IN CONTRACT
NO	NUMBER
NWL	NORMAL WATER LINE
OCS	OUTLET CONTROL SYSTEM
OCS	OVERHEAD CONTACT SYSTEM
OMF	OPERATIONS AND MAINTENANCE FACILITY
OH	OVERHEAD
P1-1 (EG)	PEDESTRIAN HEAD (PHASE 1, NO. 1)
PB2-1 (EG)	PUSHBUTTON (PHASE 2, NO. 1)
PC	POINT OF CURVE
PE	PERMANENT EASEMENT
PED	PEDESTRIAN
PITO	POINT OF INTERSECTION OF TURNOUT
PKWY	PARKWAY
POB	POINT OF BEGINNING
POE	POINT OF ENDING
POT	POINT ON TANGENT
PROP	PROPOSED
PS	POINT OF SWITCH
PT	POINT OF TANGENT
PVI	POINT OF VERTICAL INTERSECTION
R	RADIUS (FEET)
RCP	REINFORCED CONCRETE PIPE
RD	ROAD
RL	RAIL LUBRICATOR
r	RATE OF CHANGE VERTICAL CURVE
RH	RIGHT HAND
ROW	RIGHT OF WAY
RT	RIGHT
S	SOUTH
SB	SOUTH BOUND
SC	SPIRAL TO CURVE
SIG-COMM	SIGNAL COMMUNICATION
SOP	SOURCE OF POWER
ST	STREET
ST	SPIRAL TO TANGENT
ST	STORM MANHOLE STRUCTURE
STA	STATION
TCE	TEMPORARY CONSTRUCTION EASEMENT
TH	TRUNK HIGHWAY
THRU	THROUGH
TOR	TOP OF RAIL
TPSS	TRACTION POWER SUBSTATION
TRK	TRACK
TS	TANGENT TO SPIRAL
TYP	TYPICAL
UG	UNDERGROUND
V	DESIGN VELOCITY (MPH)
VC	VERTICAL CURVE
VDE	VEHICLE DYNAMIC ENVELOPE
W	WEST
WB	WEST BOUND
WLK	WALK INDICATION

TRAIL INDEX

ABBREVIATED NAME	FULL NAME / LOCATION
TRAIL 1	UNDER RED CIRCLE DR, LRT, AND YELLOW CIRCLE DR
TRAIL 2	FROM TRAIL 1 TO GREEN CIRCLE DR
TRAIL 3	OPUS STATION ACCESS FROM BREN RD E
TRAIL 4	FROM BREN RD W TO TRAIL 5
TRAIL 5	FROM OPUS STATION TO GREEN CIRCLE DR
TRAIL 6	FROM TRAIL 5 TO SMETANA RD
CEDAR LAKE TRAIL	CEDAR LAKE LRT REGIONAL TRAIL/FROM SHADY OAK STATION TO 11TH AVE
CEDAR LAKE TRAIL	CEDAR LAKE LRT REGIONAL TRAIL/WEST OF EXCELSIOR
CEDAR LAKE TRAIL	CEDAR LAKE LRT REGIONAL LRT TRAIL/BETWEEN EXCELSIOR AND KENILWORTH TRAIL CONNECTION
MIDTOWN GREENWAY	MIDTOWN GREENWAY/EAST OF KENILWORTH TRAIL CONNECTION
TRAIL A	KENILWORTH TRAIL (SECONDARY)/BETWEEN CEDAR-ISLES CHANNEL AND 21ST STREET STATION
TRAIL B	KENILWORTH TRAIL (SECONDARY)/BETWEEN 21ST STREET STATION AND PENN STATION
TRAIL B	CEDAR LAKE TRAIL (SECONDARY)/EAST OF PENN STATION
TRAIL C	10' CONNECTOR TRAIL FROM CEDAR LAKE LRT REGIONAL TRAIL TO TYLER AVE.
TRAIL D	10' CONNECTOR TRAIL/BELTLINE STATION TO CEDAR LAKE LRT REGIONAL TRAIL
KENILWORTH TRAIL	KENILWORTH TRAIL (MAIN)/W LAKE ST TO PENN STATION
CEDAR LAKE TRAIL	CEDAR LAKE TRAIL (MAIN)/PENN STATION TO TH 394
TRAIL E	KENILWORTH TRAIL (SECONDARY)/EAST OF W LAKE ST
TRAIL F	KENILWORTH TRAIL (SECONDARY)/WEST OF CEDAR LAKE PKWY
TRAIL G	NOT USED
TRAIL H	10' CONNECTOR TRAIL/EAST OF PENN STATION TO KENWOOD PKWY
TRAIL I	10' CONNECTOR TRAIL FROM CEDAR LAKE REGIONAL TRAIL TO CSAH 20 (BLAKE RD)
CEDAR LAKE TRAIL	CEDAR LAKE TRAIL (MAIN)/AT-GRADE CROSSING AT PENN STATION
TRAIL J	CEDAR LAKE TRAIL (SECONDARY)/NORTHWEST OF PENN STATION
TRAIL K	CEDAR LAKE TRAIL (SECONDARY)/NORTHWEST OF PENN STATION
TRAIL L	CEDAR LAKE TRAIL (SECONDARY)/EAST OF PENN STATION
TRAIL M	10' CONNECTOR TRAIL FROM CEDAR LAKE REGIONAL TRAIL TO CSAH 20 (BLAKE RD)
TRAIL N	8' CONNECTOR TRAIL FROM CEDAR LAKE TRAIL TO EDGEBROOOK DRIVE
TRAIL O	8' CONNECTOR TRAIL FROM CEDAR LAKE TRAIL TO W LAKE STREET
TRAIL P	8' CONNECTOR TRAIL FROM CEDAR LAKE TRAIL TO LOUISIANA AVE
TRAIL Q	10' CONNECTOR TRAIL FROM CEDAR LAKE TRAIL TO TH 7 SERVICE ROAD
TRAIL R	20' CONNECTOR TRAIL FROM VAN WHITE STATION TO CEDAR LAKE TRAIL
TRAIL S	10' CONNECTOR TRAIL FROM CEDAR LAKE REGIONAL TRAIL TO BELTLINE BLVD
TRAIL T	8' CONNECTOR TRAIL FROM VAN WHITE STATION TO VAN WHITE MEMORIAL BLVD
TRAIL U	10' TRAIL PARALLEL TO CEDAR LAKE PKWY
LUCE LINE TRAIL	LUCE LINE REGIONAL TRAIL/ON BRIDGE OVER LIGHT RAIL
TRAIL V	CONNECTOR TRAIL TO LUCE LINE REGIONAL TRAIL WEST OF LIGHT RAIL
TRAIL W	CONNECTOR TRAIL TO LUCE LINE REGIONAL TRAIL WEST OF LIGHT RAIL
TRAIL X	NOT USED
TRAIL Y	12' CONNECTOR TRAIL FROM CEDAR LAKE REGIONAL TRAIL TO WOODDALE AVE S
TRAIL Z	12' CONNECTOR TRAIL FROM CEDAR LAKE REGIONAL TRAIL TO WOODDALE AVE S
TRAIL AA	8' PEDESTRIAN CONNECTOR TRAIL FROM TRAIL B TO PENN STATION
TRAIL BB	8' PEDESTRIAN CONNECTOR TRAIL FROM TRAIL B TO PENN STATION
TRAIL CC	10' CONNECTOR TRAIL FROM KENILWORTH TRAIL (MAIN) TO PENN STATION

NO.	DATE	BY	CHECK	DESIGN	REVISION / SUBMITTAL

AECOM

90% SUBMISSION - 01/22/16

METROPOLITAN COUNCIL

SOUTHWEST Green Line LRT Extension

CIVIL - VOLUME 4D
GENERAL
NOTES, ABBREVIATIONS, AND SYMBOLS
SHEET 2

DISCIPLINE: GENERAL

SHEET NAME: 00-GEN-NTS-002

SHEET 7 OF 354

Jan, 16 2016 03:50 pm V:\3400_ADC\CAD\CAD MANAGEMENT\DRAWING LIST\COVER SHEETS 90%\CIV-GEN-NTS.dwg By: V-KriewaMR

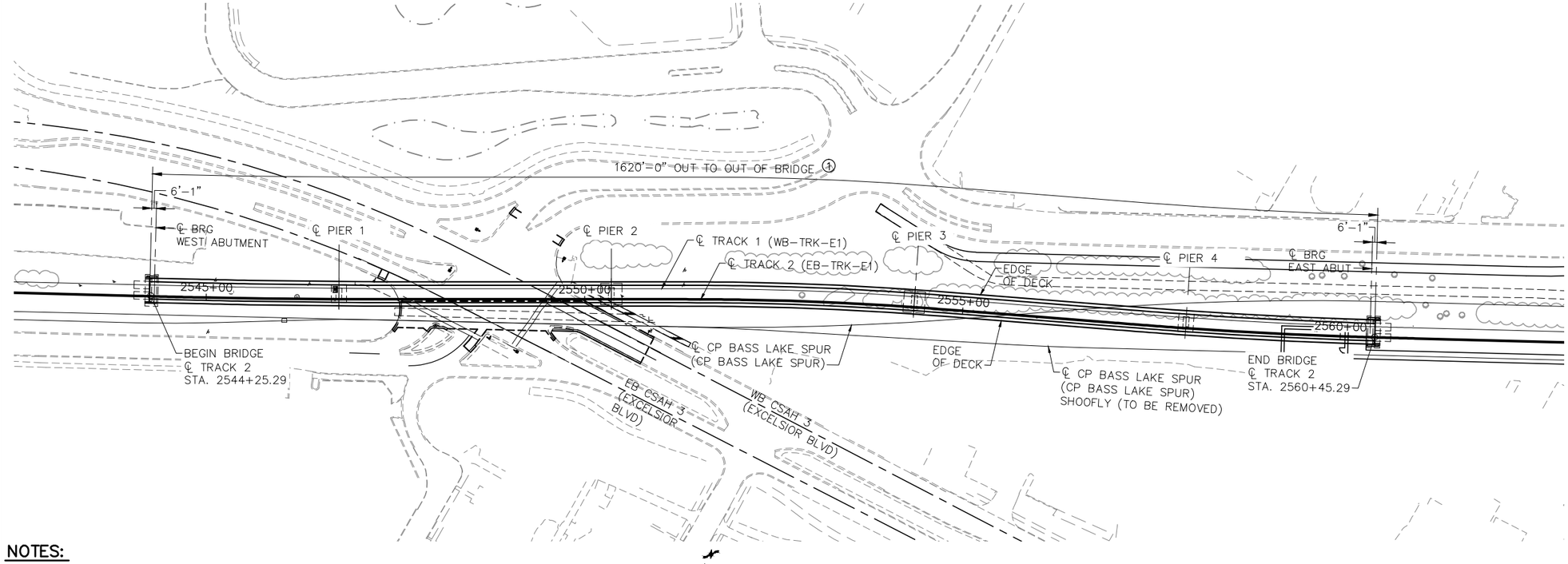

GENERAL PLAN

0 40 80 160

SCALE IN FEET

NOTES:

SEE BORING SHEETS FOR INPLACE UTILITIES.
(1) MEASURED ALONG ℄ TRACK 2.

2040 PROJECTED TRAFFIC VOLUME
CSAH 3 (EXCELSIOR BLVD.)

AADT = 25,600
DHV = 2,750
ADTT = 790

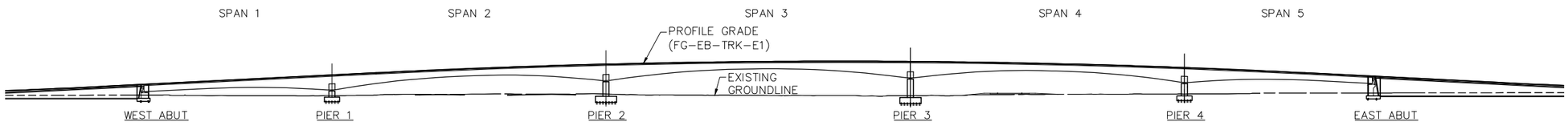

GENERAL ELEVATION

0 40 80 160

SCALE IN FEET

DESIGN DATA

2014 AASHTO LRFD BRIDGE DESIGN SPECIFICATIONS
7TH EDITION AND 2015 INTERIMS

METRO LIGHT RAIL TRANSIT DESIGN CRITERIA
(REVISION 4.0)

LOAD AND RESISTANCE FACTOR DESIGN METHOD

FOR TRAIN LOAD DIAGRAM SEE "GENERAL NOTES 1" SHEET

MATERIAL DESIGN PROPERTIES:
REINFORCED CONCRETE:
f'c = 4000 PSI *
fy = 60000 PSI REINFORCEMENT

PRESTRESSED CONCRETE:
f'c = 7500 PSI *
fpu = 270 KSI LOW RELAXATION STRANDS

DESIGN SPEED: OVER = 55 MPH (LRT)
UNDER = 35 MPH

DECK AREA 52,650 SQ. FT.

* SEE PLANS AND SPECIAL PROVISIONS FOR ADDITIONAL REQUIREMENTS.

LIST OF SHEETS

NO.	DESCRIPTION
1	KEY PLAN
2-3	GENERAL NOTES
4-7	GENERAL PLAN AND ELEVATION
8	TRANSVERSE SECTION
9-10	HORIZONTAL ALIGNMENT
11-12	BRIDGE LAYOUT
13-29	ABUTMENT DETAILS
30-53	PIER DETAILS
54-56	BEARING DETAILS
57-108	SUPERSTRUCTURE DETAILS
109-137	POST-TENSIONING DETAILS
138-152	MISC SUPERSTRUCTURE DETAILS
153-158	DRAINAGE DETAIL
159-161	BRIDGE DETAILS
162-164	BRIDGE SURVEY
165-168	BRIDGE SURVEY PLAN
169-174	BRIDGE SURVEY PROFILE

BRIDGE NO. 27C10

SOUTHWEST LRT OVER CSAH 3 (EXCELSIOR BLVD)
0.2 MI N.E. OF JCT. OF COUNTY ROAD 3 AND US-169 IN HOPKINS, MN.
250'+360'+400'+360'+250'=1,620'
PRESTRESSED CONCRETE
BOX GIRDER CONTINUOUS SPANS
32'-6" RAILWAY
BRIDGE I.D. NO. P07

SEC 20 T 117N R 21W
CITY OF HOPKINS HENNEPIN COUNTY

JOB NO: T9N635 STATE PROJECT NO: 9909-01 MnDOT REVIEW: JOE NIETFELD

NO.	DATE	BY	CHECK	DESIGN	REVISION / SUBMITTAL

DESIGNED BY: ETN CHECKED BY: JWJ
DRAWN BY: LSS CHECKED BY: JWJ

AECOM

90% SUBMISSION - 01/22/16

METROPOLITAN COUNCIL

SOUTHWEST Green Line LRT Extension

CIVIL - VOLUME 4D
EXCELSIOR BLVD
BRIDGE 27C10
KEY PLAN

DISCIPLINE: STRUCTURE

SHEET NAME: CBR27C10-BRG-KEY

SHEET 1 OF 174

Jan, 15 2016 04:03 pm C:\Users\Hodges\Jappdata\Local\Temp\AcPublish_7016\CBR27C10-BRG-KEY.dwg By: hodges

CONSTRUCTION SPECIFICATIONS

1. METROPOLITAN COUNCIL SOUTHWEST LIGHT RAIL TRANSIT (SWLRT) CIVIL CONSTRUCTION, BRIDGE SPECIAL PROVISIONS.

DESIGN SPECIFICATIONS

1. SWLRT DESIGN CRITERIA, REVISION 4.0, JUNE 2015, SECTION 18.
2. MINNESOTA DEPARTMENT OF TRANSPORTATION (MnDOT) LRFD BRIDGE DESIGN MANUAL, CURRENT REVISIONS AS OF DECEMBER 2014.
3. AMERICAN ASSOCIATION OF STATE HIGHWAY AND TRANSPORTATION OFFICIALS (AASHTO) LRFD BRIDGE DESIGN SPECIFICATIONS, SEVENTH EDITION, 2014 AND SUBSEQUENT INTERIM SPECIFICATIONS THROUGH 2015.
4. AASHTO GUIDE DESIGN SPECIFICATIONS FOR BRIDGE TEMPORARY WORKS, FIRST EDITION, 1995 AND SUBSEQUENT 2008 INTERIM REVISIONS.
5. COMITE EURO-INTERNATIONAL DE BETON – FEDERATION INTERNATIONALE DE LA PRECONSTRAINTE (CEB-FIP) MODEL CODE FOR CONCRETE STRUCTURES, 1990, CHAPTER 2 MATERIAL PROPERTIES (FOR CONCRETE CREEP AND SHRINKAGE EFFECTS ONLY).
6. MnDOT TECHNICAL MEMORANDA
7. MnDOT BRIDGE DETAILS MANUAL, PARTS I AND II

DATUM STATEMENT

ALL ELEVATIONS ARE BASED ON NORTH AMERICAN VERTICAL DATUM 1988 (NAVD 1988).

CLEARANCES

1. MINIMUM VERTICAL:
   A. EXCELSIOR BOULEVARD – 16'-4" TYPICAL ; 14'-6" TEMPORARY CLEARANCE DURING CONSTRUCTION WITH FORM TRAVELER
   B. CP RAILWAY (FROM TOP OF RAIL) 23'-4"
2. MINIMUM HORIZONTAL (WITHOUT CRASH WALL OR PIER DESIGNED FOR COLLISION FORCE):
   A. EXCELSIOR BOULEVARD (FROM EDGE OF TRAVEL LANE) 30'-0"
   B. CP RAILWAY (FROM CENTERLINE TRACK) 25'-0"

DESIGN LOADING

1. PERMANENT LOADS (DC, DW, EH, EV, ES)
   A. UNIT WEIGHT OF SUPERSTRUCTURE CIP CONCRETE: 155 PCF
   B. UNIT WEIGHT OF SUBSTRUCTURE CONCRETE: 150 PCF
   C. UNIT WEIGHT OF STRUCTURAL STEEL: 490 PCF
   D. RAILS & FASTENINGS PER TRACK (2 RAILS): 200 PLF (INCLUDES GUARD RAIL)
   E. RAILING (INCLUDING SOUND BARRIER) (EACH): 40 PLF (INCLUDES RAILING & 1½" TALL CURB)
   F. EMERGENCY WALKWAY & DUCT BANK: 675 PLF LEFT ; 595 PLF RIGHT
   G. TRACKWORK PLINTHS PER TRACK (2 RAILS): 400 PLF
   H. UTILITY ALLOWANCE: 100 PLF
   I. OVERHEAD CONTACT SYSTEM (OCS): VARIES BY LOCATION; TYPICAL VALUES SHOWN

	VERTICAL AXIS	LONGITUDINAL AXIS	TRANSVERSE AXIS
LOAD (KIPS)	5.0	±1.0	±5.0
MOMENT ABOUT (KIP-FT)	±15.0	±85.0	±10.0

   J. UNIT WEIGHT OF SOIL: 125 PCF
2. LIVE LOADS (LL, PL, IM)
   A. LIVE LOAD (LL) – MAXIMUM FORCE EFFECT FROM LIGHT RAIL VEHICLE (LRV) OR MAINTENANCE TRAIN.
      1. LIGHT RAIL VEHICLE (LRV) – NUMBER OF VEHICLES CONSIDERED IN AN LRV TRAIN VARIES FROM ONE, TWO, OR THREE CARS.

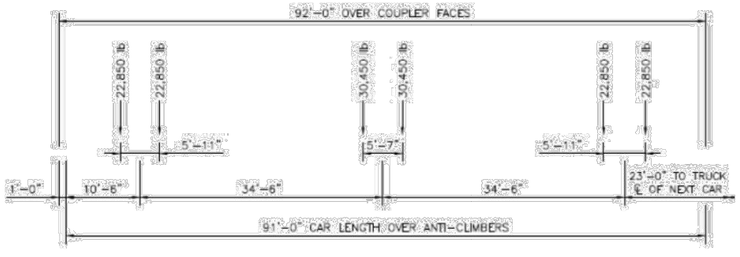

      2. MAINTENANCE TRAIN – THE MAINTENANCE TRAIN CONSISTS OF ONE LOCOMOTIVE AND ONE, TWO, THREE, OR FOUR BALLAST CARS.

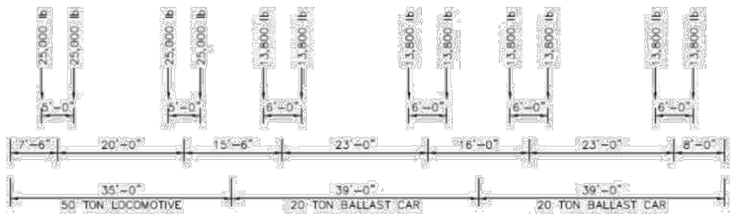

   B. PEDESTRIAN LIVE LOAD (PL) – 90 PSF APPLIED TO SERVICE & EMERGENCY WALKWAYS. NO PEDESTRIAN LIVE LOAD CONSIDERATION WITH LRV OR MAINTENANCE TRAINS ON GUIDEWAY.
   C. DYNAMIC LIVE LOAD ALLOWANCE (IM) – NOT APPLICABLE TO THE MAINTENANCE TRAIN OR IN THE DESIGN OF ABUTMENTS, BEARINGS, AND FOUNDATION ELEMENTS BELOW GROUND.
      1. VERTICAL: APPLY PER AASHTO 3.6.2.1 ; 33% OF LIVE LOAD (LL) TYPICAL, 10% OF LIVE LOAD (LL) IN LOAD COMBINATIONS WITH SNOW LOAD ON GUIDEWAY (SG).
      2. ROCKING EFFECT: 20% OF LIVE LOAD (LL) APPLIED AS VERTICAL FORCE COUPLE.
3. CENTRIFUGAL & HUNTING FORCE (CE) – WHEN CENTRIFUGAL FORCE AND HUNTING FORCE ACT SIMULTANEOUSLY, ONLY THE LARGER OF THE TWO FORCES IS CONSIDERED.
   A. CENTRIFUGAL FORCE: % OF LL WITHOUT IMPACT, CF = $0.00117xS^2xD$ WHERE S = DESIGN SPEED (MPH) AND D = DEGREE OF CURVE, APPLIED TRANSVERSELY 6 FEET ABOVE THE TOP OF RAIL.
   B. HUNTING FORCE: 25% OF THE STANDARD LRV CENTER TRUCK LOADING (CENTER TWO AXLES) WITHOUT IMPACT APPLIED TRANSVERSELY AT THE TOP OF RAIL. FORCE ONLY APPLIED IN DESIGN OF TRACK PLINTHS AND TRANSVERSE RESTRAINT FOR BEARINGS (NO HUNTING FORCE APPLIED TO SUBSTRUCTURE AND/OR FOUNDATIONS).
4. LONGITUDINAL FORCE (LF) – LF = 0.046xWxA WHERE W = VEHICLE WEIGHT (LRV OR MAINTENANCE TRAIN) AND A = ACCELERATION OR DECELERATION RATE (MPH/SEC). VEHICLE ACCELERATION & DECELERATION RATES TAKEN AS 3 MPH/SEC AND 6.5 MPH/SEC, RESPECTIVELY. VEHICLE WEIGHT (W) TO CALCULATE DECELERATION FORCES REDUCED TO AW3 VEHICLE (143.0 KIPS PER CAR). LF APPLIED OVER THE LENGTH OF THE TRAIN IN A HORIZONTAL PLANE AT THE TOP OF LOW RAIL.
5. WIND LOADS (WS, WL)
   A. WIND ON STRUCTURE (WS) – CALCULATE AND APPLY PER AASHTO 3.8 INCLUDING VERTICAL WIND PRESSURE PER AASHTO 3.8.2.
      1. REFERENCE WIND VELOCITY, V_{30}: 100 MPH
      2. OPEN COUNTRY CONDITION ASSUMED IN SELECTION OF Vo AND Zo VALUES IN AASHTO TABLE 3.8.1.1-1.
   B. WIND ON LIVE LOAD (WL) – 225 PLF APPLIED TRANSVERSELY 6 FEET ABOVE THE TOP OF RAIL OVER A MAXIMUM LENGTH OF TWO, THREE CAR TRAINS.
6. SNOW LOAD (SG) – 355 PLF (13.5 PSF IN WIDTH OF EMERGENCY WALKWAY & DUCT BANK AND 11 PSF BETWEEN WALKWAYS).
7. CREEP & SHRINKAGE (CR, SH) – CALCULATE STRAINS PER CEB-FIP, CHAPTER 2. MEAN ANNUAL RELATIVE HUMIDITY FOR DESIGN: 73%.
8. FRICTION FORCES (FR) – FRICTION COEFFICIENT FOR PTFE/STAINLESS STEEL SLIDING SURFACE OF DISC BEARINGS ASSUMED IN DESIGN TO BE 0.06. BEARING FRICTIONAL FORCES DETERMINED USING THE PERMANENT DEAD LOAD REACTION ONLY.
9. THERMAL FORCES (TU, TG) – APPLY LOAD FACTORS FOR UNIFORM TEMPERATURE, γ_{TU}, AND TEMPERATURE GRADIENT, γ_{TG}, PER AASHTO 3.4.1.
   A. UNIFORM TEMPERATURE (TU):
      1. MEAN TEMPERATURE: 45 °F
      2. THERMAL COEFFICIENT: 0.000006 IN/IN PER °F
      3. SEASONAL VARIATION: $TU_{MAXDESIGN}$ 120 °F (TEMPERATURE RISE 75 °F)
         $TU_{MINDESIGN}$ −30 °F (TEMPERATURE FALL 75 °F)
      4. MOVEMENT FACTOR FOR BEARINGS & JOINTS: 1.2 (THERMAL)
         1.25 (CREEP & SHRINKAGE)
   B. TEMPERATURE GRADIENT (TG):
      1. LONGITUDINAL TEMPERATURE GRADIENT PER AASHTO 3.12.3, ZONE 2.
      2. REVERSIBLE LINEAR TRANSVERSE TEMPERATURE GRADIENT OF 10 °F BETWEEN INSIDE AND OUTSIDE OF BOX GIRDER.
   C. RAIL-STRUCTURE INTERACTION FORCES:
      1. RSI FORCES BASED UPON TEMPERATURE RISE OF 30 °F & TEMPERATURE FALL OF 120 °F FOR THE RAILS AND SEASONAL VARIATION SHOWN ABOVE FOR THE CONCRETE SUPERSTRUCTURE.
      2. RAIL SEAT ASSEMBLIES – SPACED AT 30 INCH CENTERS ALONG RAIL WITH ASSUMED LONGITUDINAL RESTRAINT OF 3.0 KIPS AND STIFFNESS PRIOR TO SLIP OF 20.0 KIPS/INCH.
10. EXTREME EVENTS (EQ, CT, DR, OF)
   A. EARTHQUAKE EFFECTS (EQ) – SEISMIC ZONE 1, NO SEISMIC ANALYSIS REQUIRED.
      1. MINIMUM SUPPORT LENGTH PER AASHTO 4.7.4.4.
      2. MINIMUM HORIZONTAL DESIGN CONNECTION FORCE IN THE RESTRAINED DIRECTION BETWEEN THE SUPERSTRUCTURE AND SUBSTRUCTURE NOT LESS THAN 0.15 TIMES THE TRIBUTARY PERMANENT DEAD LOAD.
   B. VEHICULAR COLLISION FORCE (CT) – BRIDGE PIERS LOCATED WITHIN THE MINIMUM CLEARANCE RESTRICTION FOR A ROADWAY OR RAILROAD DESIGNED FOR A COLLISION FORCE OF 600 KIPS. COLLISION FORCE APPLIED AT AN ANGLE UP TO 15 DEGREES FROM THE TANGENT TO THE ROADWAY OR RAILWAY AND 5 FEET ABOVE THE GROUND OR TOP OF RAIL.
   C. DERAILMENT LOAD (DR) – CONSISTS OF THE STANDARD LRV CENTER TRUCK LOADING (CENTER TWO AXLES) PLUS A DERAILMENT IMPACT FACTOR OF 100% TRANSVERSELY POSITIONED UP TO 5 FEET FROM THE CENTERLINE OF THE TRACK. LOAD FROM THE REMAINING LRV AXLES APPLIED AT THE RAIL LOCATIONS USING THE NORMAL IMPACT FACTOR OF 33%.
   D. RAIL BREAK (OF) – STRUCTURE DESIGNED FOR THE POSSIBILITY OF ONE RAIL BREAK AT A TIME WITH NOT MORE THAN A 4" GAP.
11. LOAD COMBINATIONS
   A. LOAD COMBINATIONS AT THE APPROPRIATE LIMIT STATES PER MODIFICATIONS IN SWLRT DESIGN CRITERIA SECTION 18.3 IN LIEU OF AASHTO TABLE 3.4.1-1.
      1. LOAD FACTORS FOR PERMANENT LOADS, γ_P, PER AASHTO TABLE 3.4.1-2.
      2. LOAD FACTORS FOR PERMANENT LOADS DUE TO SUPERIMPOSED DEFORMATIONS, γ_P, PER AASHTO TABLE 3.4.1-3. COMBINATIONS WITH CREEP & SHRINKAGE FACTORS OF ZERO (BEFORE TIME EFFECTS) ALSO CONSIDERED.
   B. ADDITIONAL LOAD COMBINATIONS INVESTIGATED AT THE SERVICE LIMIT STATE:
      1. SERVICE IA – DC + DW + EH + EV + ES + CR + SH + EL + PS + SE + WA + FR + LL + 0.5 X SG + 1.0/1.2 X TU
      2. SERVICE IIIA – DC + DW + EH + EV + ES + CR + SH + EL + PS + SE + WA + FR + 0.8 X LL + 0.5 X SG + 1.0/1.2 X TU
      3. SERVICE V – DC + DW + EH + EV + ES + CR + SH + EL + PS + SE + WA + FR + TG
      4. CONSTRUCTION LOAD COMBINATIONS PER AASHTO 5.14.2.3.3.
   C. ADDITIONAL LOAD COMBINATIONS INVESTIGATED AT THE STRENGTH LIMIT STATE:
      1. STRENGTH IA – γ_P X (DC + DW + EH + EV + ES + CR + SH + EL + PS) + SE + WA + FR + 1.35 X LL + 0.8 X SG + 0.5/1.2 X TU
   D. CONSTRUCTION LOAD COMBINATIONS INVESTIGATED AT THE STRENGTH LIMIT STATE PER AASHTO 5.14.2.3.4 AND 3.4.2.1.
      1. LOAD FOR FORM TRAVELER (CEQ) AND DIFFERENTIAL DEAD LOAD OF CANTILEVER (DIFF) INCLUDED AND FACTORED WITH γ_{DC} IN AASHTO TABLE 3.4.1-1.
      2. WIND UPLIFT ON CANTILEVER INCLUDED AND FACTORED WITH γ_{WS} IN AASHTO TABLE 3.4.1-1. LOAD FACTOR FOR WS & WUP IN STRENGTH III COMBINATION TAKEN AS 1.25.
      3. CONSTRUCTION LIVE LOAD (CLL) AND WIND ON EQUIPMENT (WE) USED IN PLACE OF LL AND WL IN AASHTO TABLE 3.4.1-1. LOAD FACTOR FOR CLL IN STRENGTH I COMBINATION TAKEN AS 1.5.
      4. ADDITIONAL CONSTRUCTION LOAD COMBINATIONS PER AASHTO 5.14.2.3.4 MODIFIED FOR ACCIDENTAL LOSS OF FORM TRAVELER (IMPACT DUE TO LOSS OF TRAVELER NOT APPLIED TO FOUNDATIONS):
         A. MAXIMUM FORCE EFFECTS: 1.1 X DC + 1.3 X [CEQ (APPLIED DOWNWARD ON ONE CANTILEVER) + CLL] + CEQ (APPLIED UPWARD ON ONE CANTILEVER)
         B. MINIMUM FORCE EFFECTS: DC + CEQ (APPLIED DOWNWARD ON ONE CANTILEVER) + CEQ (APPLIED UPWARD ON ONE CANTILEVER)

MATERIALS

1. CONCRETE (MINIMUM 28-DAY CYLINDER STRENGTH AS NOTED):

LOCATION	MnDOT MIX DESIGNATION	MIN. COMPRESSIVE STRENGTH (PSI)
SUPERSTRUCTURE	3JM	7500
SUPERSTRUCTURE – WALKWAY & TRACKWORK PLINTHS	3S52	4000
SUBSTRUCTURE – ABUTMENTS	3B52	4000
SUBSTRUCTURE – PIERS	3JM	5500
SUBSTRUCTURE – FOOTINGS	1G52	4000
SUBSTRUCTURE – BEARING PEDESTALS	3JM	5500

2. MASS CONCRETE – SEE SPECIAL PROVISIONS.
3. REINFORCING STEEL:
   A. ALL REINFORCING SHALL BE EPOXY-COATED IN CONFORMANCE WITH AASHTO M31 (ASTM A615), GRADE 60, WITH EXCEPTION OF BARS ENTIRELY EMBEDDED IN FOOTINGS WHICH SHALL BE PLAIN (BLACK). EPOXY COATED REINFORCING SHALL BE COATED IN ACCORDANCE WITH THE REQUIREMENTS OF AASHTO M284.

NO.	DATE	BY	CHECK	DESIGN	REVISION / SUBMITTAL

DESIGNED BY: ETN CHECKED BY: JWJ
DRAWN BY: JWH CHECKED BY: JWJ

AECOM

90% SUBMISSION - 01/22/16

METROPOLITAN COUNCIL

SOUTHWEST Green Line LRT Extension

CIVIL - VOLUME 4D
EXCELSIOR BLVD
BRIDGE 27C10
GENERAL NOTES 1

DISCIPLINE: STRUCTURE
SHEET NAME: CBR27C10-BRG-GPE-001

SHEET 2 OF 174

Jan, 18 2016 05:48 pm V:\3400_ADC\CAD\SEGMENT E1\PLAN SHEETS\STRUCTURES\CBR27C10\CBR27C10-BRG-GPE-001.dwg By: songers

MATERIALS, CONT.

3. REINFORCING STEEL, CONT.:
   B. CONCRETE COVER REQUIREMENTS (UNLESS OTHERWISE NOTED IN THE PLANS):
      1. SUPERSTRUCTURE
         A. SEGMENTAL BOX GIRDER: 2" EXTERIOR SURFACES ; 1½" INTERIOR SURFACES
         B. WALKWAY & TRACKWORK PLINTHS: 2"
      2. SUBSTRUCTURE
         A. PIER CAPS & COLUMNS: 2" (MEASURED TO SPIRALS OR TIES)
         B. FOOTINGS: 3"
         C. ABUTMENTS: 2"
4. PRESTRESSING STEEL:
   A. STRANDS – AASHTO M203 (ASTM A416), SEVEN WIRE, GRADE 270, LOW RELAXATION
      1. STRAND SIZE: 0.6" DIAMETER
      2. APPARENT MODULUS OF ELASTICITY: 28,500 KSI
      3. MAXIMUM JACKING STRESS: 0.81 F_{PU} (0.9 F_{PY})
      4. MAXIMUM ANCHORING STRESS
         A. AT END OF SEATING ZONE: 0.74 F_{PU}
         B. AT ANCHOR: 0.7 F_{PU}
      5. ANCHOR SET: 3/8"
      6. FRICTION COEFFICIENT: 0.25
      7. WOBBLE COEFFICIENT
         A. EXTERNAL TENDONS: 0.0
         B. INTERNAL TENDONS: 0.0002 PER FOOT
   B. BARS – AASHTO M275 (ASTM A722), GRADE 150 (TYPE II)
      1. APPARENT MODULUS OF ELASTICITY: 30,000 KSI
      2. MAXIMUM JACKING STRESS: 0.72 F_{PU} (0.9 F_{PY})
      3. MAXIMUM ANCHORING STRESS
         A. AT END OF SEATING ZONE: 0.7 F_{PU}
         B. AT ANCHOR: 0.7 F_{PU}
      4. ANCHOR SET: 1/16"
      5. WOBBLE COEFFICIENT: 0.0002 PER FOOT
   C. TENDON DUCTS
      1. TRANSVERSE DECK TENDONS – CORRUGATED HIGH–DENSITY POLYPROPYLENE FLAT DUCT
      2. LONGITUDINAL EXTERNAL TENDONS – HIGH–DENSITY POLYETHYLENE
      3. LONGITUDINAL INTERNAL TENDONS – CORRUGATED HIGH–DENSITY POLYPROPYLENE ROUND DUCT
      4. LONGITUDINAL EXTERNAL TENDON DEVIATOR – RIGID STEEL (SCHEDULE 40) (GALVANIZED)
      5. BARS – CORRUGATED HIGH–DENSITY POLYPROPYLENE
5. STEEL H–PILES – AASHTO M223 (ASTM A572), GRADE 50
6. DISC BEARINGS – AASHTO M270 (ASTM A709), GRADE 50. METALIZE THE SOLE AND BEARING PLATES IN ACCORDANCE WITH MnDOT SPEC. 2471.3L2. ALL OTHER METALLIC COMPONENTS SHALL BE GALVANIZED IN ACCORDANCE WITH MnDOT SPEC. 3394.
   A. STUD ANCHOR BOLTS – AASHTO M164 (ASTM A325), TYPE 1
   B. SWEDGED ANCHOR RODS – AASHTO M314 (ASTM F1554), GRADE 55

ALLOWABLE STRESSES / ANALYSIS ITEMS

1. DESIGN METHOD:
   A. SUPERSTRUCTURE DESIGNED FOR ALL APPLICABLE SERVICE AND STRENGTH LIMIT STATES AS DEFINED BY THE LOAD COMBINATIONS IN THE SWLRT DESIGN CRITERIA.
   B. SUBSTRUCTURE DESIGNED FOR ALL APPLICABLE STRENGTH AND EXTREME EVENT LIMIT STATES AS DEFINED BY THE LOAD COMBINATIONS IN THE SWLRT DESIGN CRITERIA AND CHECKED AT THE SERVICE LIMIT STATE FOR THE CRACK CONTROL PROVISIONS IN AASHTO 5.7.3.4. CLASS 1 EXPOSURE CONDITION CONSIDERED FOR ALL MEMBERS WITH EXCEPTION THAT CLASS 2 EXPOSURE CONDITION CONSIDERED FOR PIER CAPS.
2. SUPERSTRUCTURE CONCRETE STRESSES AT THE SERVICE LIMIT STATE PER AASHTO 5.9.4 AND STRESSES FOR CONSTRUCTION LOAD COMBINATIONS PER AASHTO 5.14.2.3, WITH EXCEPTION OF MODIFIED TENSION STRESSES FOR SERVICE LIMIT STATE LOAD COMBINATIONS AS FOLLOWS:
   A. LONGITUDINAL & TRANSVERSE TENSION:
      1. TOP OF DECK – 0.095 $\delta f'c$ FOR LOAD CASES THAT INCLUDE NEGATIVE TG
         ZERO TENSION FOR ALL OTHER LOAD CASES
      2. 0.095 $\delta f'c$ ELSEWHERE
   B. PRINCIPAL WEB TENSION – 0.110 $\delta f'c$

ALLOWABLE STRESSES / ANALYSIS ITEMS, CONT.

3. SEGMENT CASTING AND ERECTION
   A. MINIMUM CONCRETE STRENGTH PRIOR TO RELEASING FORMWORK AND ADVANCING TRAVELERS: 4000 PSI
   B. MINIMUM CONCRETE STRENGTH PRIOR TO STRESSING TRANSVERSE POST–TENSIONING: 4000 PSI
   C. MINIMUM CONCRETE STRENGTH PRIOR TO STRESSING LONGITUDINAL POST–TENSIONING: 4000 PSI FOR CIP SEGMENTS & 2,500 PSI FOR CIP CLOSURE JOINTS
   D. FOR PURPOSES OF DESIGN, AVERAGE AGE OF SEGMENTS FOR ADVANCEMENT OF FORM TRAVELERS: 1 DAY
   E. FOR PURPOSES OF DESIGN, AVERAGE CASTING CYCLE FOR A PAIR OF SEGMENTS: 1 WEEK

BEARING REPLACEMENT

PROVISIONS HAVE BEEN MADE FOR JACKING OF THE SUPERSTRUCTURE FOR REPLACEMENT OF THE BEARINGS. JACKING LOCATIONS AND LOADS ARE AS SHOWN IN THE PLANS. SEE BEARING REPLACEMENT DETAILS FOR LIVE LOAD RESTRICTIONS.

FOUNDATIONS

SUBSTRUCTURE UNIT	REQUIRED FACTORED PILE BEARING RESISTANCE fRn (TONS)	PILE TYPE & SIZE
WEST ABUTMENT	225	HP14x89
PIER 1	300	HP14x117
PIER 2	300	HP14x117
PIER 3	300	HP14x117
PIER 4	300	HP14x117
EAST ABUTMENT	225	HP14x89

RESISTANCE FACTOR FOR PILE DRIVING:
0.60 FOR H–PILING (WITHOUT PDA AND USE OF MnDOT MPF12 DRIVING FORMULA)
0.65 FOR H–PILING (WITH USE OF PDA)

ALL PILES SHALL BE WELDED IN ACCORDANCE WITH THE CONTRACT DOCUMENTS. DRIVE–FIT SPLICES ARE NOT ALLOWED.

CONSTRUCTION NOTES

THE 2016 EDITION OF THE MINNESOTA DEPARTMENT OF TRANSPORTATION "STANDARD SPECIFICATIONS FOR CONSTRUCTION" AND THE 2016 EDITION OF THE "MATERIALS LAB SUPPLEMENTAL SPECIFICATIONS FOR CONSTRUCTION" SHALL GOVERN.

THE FIRST DIGIT OR THE FIRST TWO DIGITS OF EACH BAR MARK INDICATE THE BAR SIZE. THE BAR SIZES SHOWN IN THIS PLAN SET ARE IN U.S. CUSTOMARY DESIGNATIONS. BARS MARKED WITH A SUFFIX "E" SHALL BE EPOXY COATED IN ACCORDANCE WITH SPEC. 3301.

THE SUBSURFACE UTILITY INFORMATION IN THIS PLAN SET IS UTILITY QUALITY LEVEL D. THIS UTILITY QUALITY LEVEL WAS DETERMINED ACCORDING TO THE GUIDELINES OF CI/ASCE 38–02, ENTITLED "STANDARD GUIDELINES FOR THE COLLECTION AND DEPICTION OF EXISTING SUBSURFACE UTILITY DATA".

SEE LRFD BRIDGE DESIGN MANUAL, APPENDIX 2–C, FOR A LIST OF STANDARD ABBREVIATIONS UNLESS NOTED OTHERWISE.

SCHEDULE OF QUANTITIES

SPEC. SECTION	ITEM	UNIT	QUANTITY
–	CONSTRUCT BRIDGE 27C10	LUMP SUM	LS

COMPONENT ITEM SUMMARY (BRIDGE 27C10)

SPEC. SECTION (3)	COMPONENT ITEM	UNIT (2)	QUANTITY (2)
MnDOT 2401	STRUCTURE EXCAVATION, CLASS E (4)	CU YD	XXX
MnDOT 2401	STRUCTURAL CONCRETE (1G52)	CU YD	XXX
MnDOT 2401	STRUCTURAL CONCRETE (3B52)	CU YD	XXX
MnDOT 2401	STRUCTURAL CONCRETE (3JM) PIERS	CU YD	XXX
MnDOT 2401	STRUCTURAL CONCRETE (3JM) BEARING PEDESTALS	SQ FT	XXX
MnDOT 2401	STRUCTURAL CONCRETE (3JM) BOX GIRDER	CU YD	XXX
MnDOT 2401	STRUCTURAL CONCRETE (3S52) EMERGENCY WALKWAY	CU YD	XXX
MnDOT 2401	REINFORCEMENT BARS	POUND	XXX
MnDOT 2401	REINFORCEMENT BARS (EPOXY COATED)	POUND	XXX
MnDOT 2402	EXPANSION JOINT DEVICES	LIN FT	XXX
MnDOT 2402	ACCESS DOOR	EACH	XXX
MnDOT 2402	BIRD SCREENING	LUMP SUM	XXX
MnDOT 2402	DRAINAGE SYSTEM BRIDGE DECK	LUMP SUM	XXX
MnDOT 2452	STEEL H–PILING DRIVEN 14"	LIN FT	XXX
MnDOT 2452	STEEL H–PILING DELIVERED 14"	LIN FT	XXX
MnDOT 2452	PILE REDRIVING	EACH	XXX
MnDOT 2452	PILE ANALYSIS	EACH	XXX
MnDOT 2452	PILE TIP PROTECTION 14"	EACH	XXX
MnDOT 2557	WIRE FENCE DESIGN W–1 (3'–6" HIGH)	LIN FT	XXX
MnDOT 2557	WIRE FENCE DESIGN W–1 (6'–0" HIGH)	LIN FT	XXX
MnDOT 2557	WIRE FENCE DESIGN W–1 (8'–0" HIGH)	LIN FT	XXX
SB–2401.10	ARCH CONCRETE TEXTURE (RECTANGULAR GRID)	SQ FT	XXX
SB–2401.10	ARCH CONCRETE TEXTURE (LIMESTONE)	SQ FT	XXX
SB–2401.11	ARCH SURFACE FINISH (SINGLE COLOR)	SQ FT	XXX
SB–2401.15	POST–TENSIONING STEEL STRAND (TRANSVERSE)	POUND	XXX
SB–2401.15	POST–TENSIONING STEEL STRAND (LONGITUDINAL)	POUND	XXX
SB–2401.15A	SEGMENTAL BRIDGE EQUIPMENT	LUMP SUM	XXX
SB–2402.8	DISC–TYPE EXPANSION BEARING ASSEMBLY (NE)	EACH	XXX
SB–2402.8	DISC–TYPE EXPANSION BEARING ASSEMBLY (GEL)	EACH	XXX
SB–2402.8	DISC–TYPE EXPANSION BEARING ASSEMBLY (GET)	EACH	XXX
SB–2402.8	DISC–TYPE FIXED BEARING ASSEMBLY (F)	EACH	XXX
SB–XX	SOUND BARRIER	LIN FT	XXX

(1) A BENCH MARK IS REQUIRED, LOCATED AT THE SOUTHEAST CORNER OF THE BRIDGE. OWNER WILL FURNISH DISK. BEND PRONGS OUTWARD TO ANCHOR DISK TO CONCRETE. BOTTOM OF DISK TOP TO BE PLACED FLUSH WITH CONCRETE.

(2) QUANTITIES LISTED FOR THE COMPONENT ITEMS OF THE LUMP SUM BR 27C10 ITEM ARE FOR INFORMATIONAL PURPOSES ONLY. ANY ADDITIONAL ITEMS OR CHANGES IN QUANTITIES REQUIRED SHALL BE PROVIDED BY THE CONTRACTOR WITH NO ADDITIONAL COMPENSATION.

(3) MEASUREMENT AND PAYMENT FOR COMPONENT ITEMS SHALL BE PART OF THE LUMP SUM PAYMENT FOR BR 27C10. REFER TO MnDOT STANDARD SPECIFICATIONS OR SPECIAL PROVISIONS FOR TECHNICAL SPECIFICATION REQUIREMENTS FOR ALL PROVISIONS OTHER THAN MEASUREMENT & PAYMENT REQUIREMENTS.

(4) STRUCTURE EXCAVATION INCLUDES TEMPORARY SUPPORT EXCAVATION.

Jan, 18 2016 05:49 pm V:\3400_ADC\CAD\SEGMENT E1\PLAN SHEETS\STRUCTURES\CBR27C10\CBR27C10-BRG-GPE-002.dwg By: songers

NO.	DATE	BY	CHECK	DESIGN	REVISION / SUBMITTAL

DESIGNED BY: ETN CHECKED BY: JWJ
DRAWN BY: JWH CHECKED BY: JWJ

AECOM

90% SUBMISSION - 01/22/16

METROPOLITAN COUNCIL

SOUTHWEST Green Line LRT Extension

CIVIL - VOLUME 4D
EXCELSIOR BLVD
BRIDGE 27C10
GENERAL NOTES 2

DISCIPLINE: STRUCTURE
SHEET NAME: CBR27C10-BRG-GPE-002

CURVE NO. E1–107
R = 10,000.00'
Lc = 150.42'
Ls = 80.00'
Ea = 0.00"
Eu = 1.20"
V = 55 MPH

CURVE NO. E1–207
R = 10,014.00'
Lc = 150.74'
Ls = 80.00'
Ea = 0.00"
Eu = 1.20"
V = 55 MPH

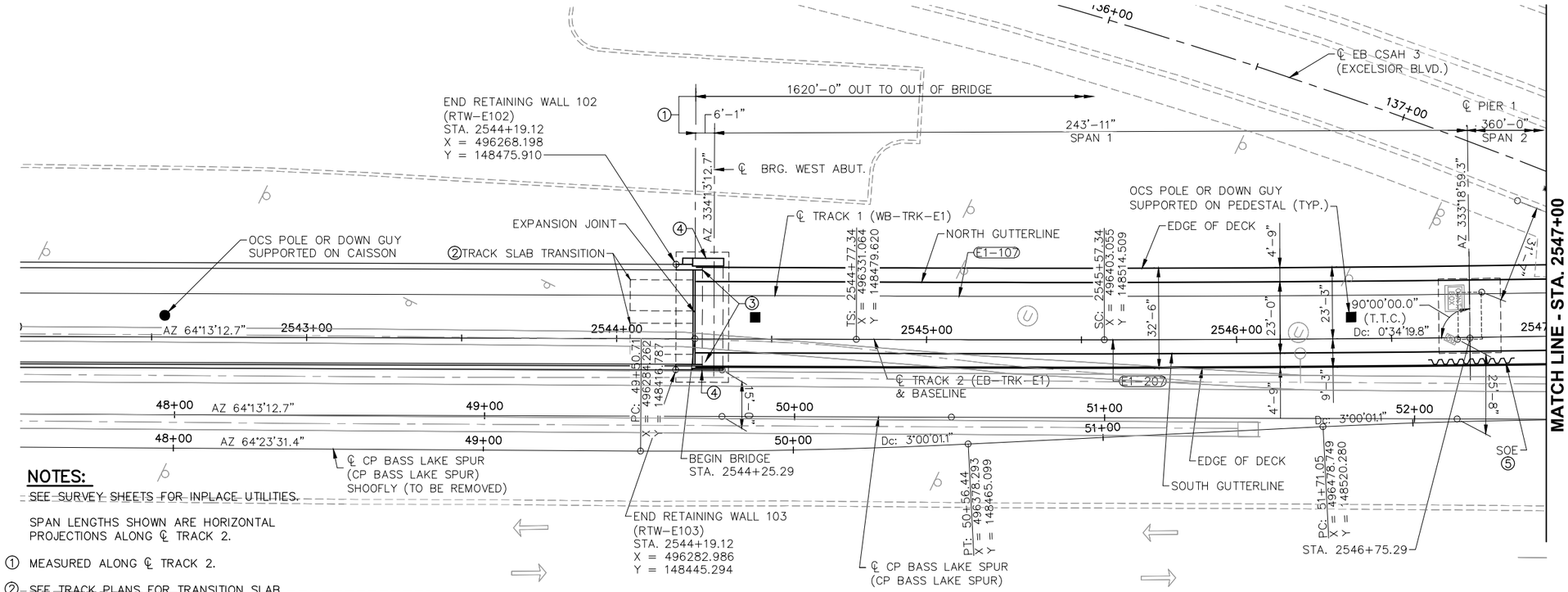

NOTES:

~~SEE SURVEY SHEETS FOR INPLACE UTILITIES.~~

SPAN LENGTHS SHOWN ARE HORIZONTAL PROJECTIONS ALONG ℄ TRACK 2.

① MEASURED ALONG ℄ TRACK 2.

② ~~SEE TRACK PLANS FOR TRANSITION SLAB~~ DETAILS.

③ STRAY CURRENT BOND TEST STATION. SEE NOTE 8 ON "STRAY CURRENT DETAILS 2" SHEET.

④ STRAY CURRENT BOND TEST STATION. SEE NOTE 7 ON "STRAY CURRENT DETAILS 2" SHEET.

⑤ SUPPORT OF EXCAVATION (SOE) TO BE DESIGNED BY THE CONTRACTOR. STEEL SHEET PILING SHOWN, OTHER SYSTEMS MAY BE UTILIZED AT THE CONTRACTOR'S OPTION. SEE SPECIAL PROVISIONS.

GENERAL PLAN

0 10 20 40

SCALE IN FEET

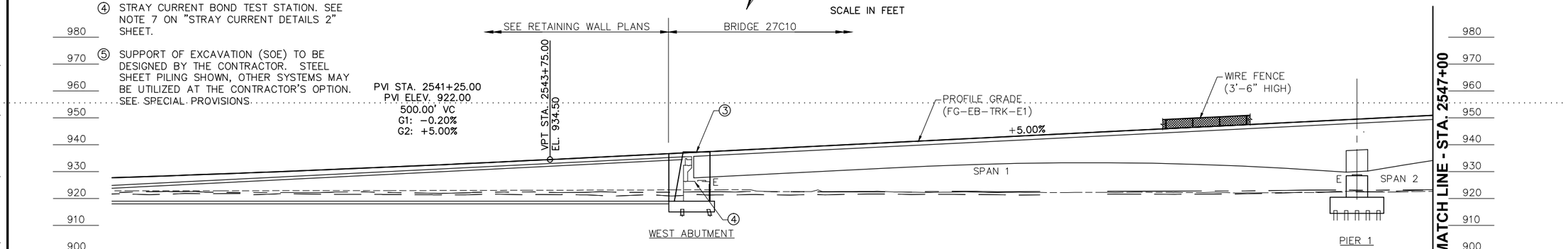

GENERAL ELEVATION

0 10 20 40

SCALE IN FEET

EXISTING GROUNDLINE PROFILE
–20' LT.
TRACK 2 C/L
10' RT.

NO.	DATE	BY	CHECK	DESIGN	REVISION / SUBMITTAL

DESIGNED BY: ETN CHECKED BY: JWJ
DRAWN BY: LSS CHECKED BY: JWJ

AECOM

90% SUBMISSION - 01/22/16

METROPOLITAN COUNCIL

SOUTHWEST Green Line LRT Extension

CIVIL - VOLUME 4D
EXCELSIOR BLVD
BRIDGE 27C10
GENERAL PLAN & ELEVATION 1

DISCIPLINE: STRUCTURE

SHEET NAME: CBR27C10-BRG-GPE-003

SHEET 4 OF 174

Jan, 15 2016 01:33 pm V:\3400_ADC\CAD\SEGMENT E1\PLAN SHEETS\STRUCTURES\CBR27C10\CBR27C10-BRG-GPE-003.dwg By: songers

CURVE NO. E1–108
R = 4,014.00'
Lc = 195.26'
Ls = 120.00'
Ea = 1.25"
Eu = 1.74"
V = 55 MPH

CURVE NO. E1–208
R = 4,000.00'
Lc = 194.16'
Ls = 120.00'
Ea = 1.25"
Eu = 1.75"
V = 55 MPH

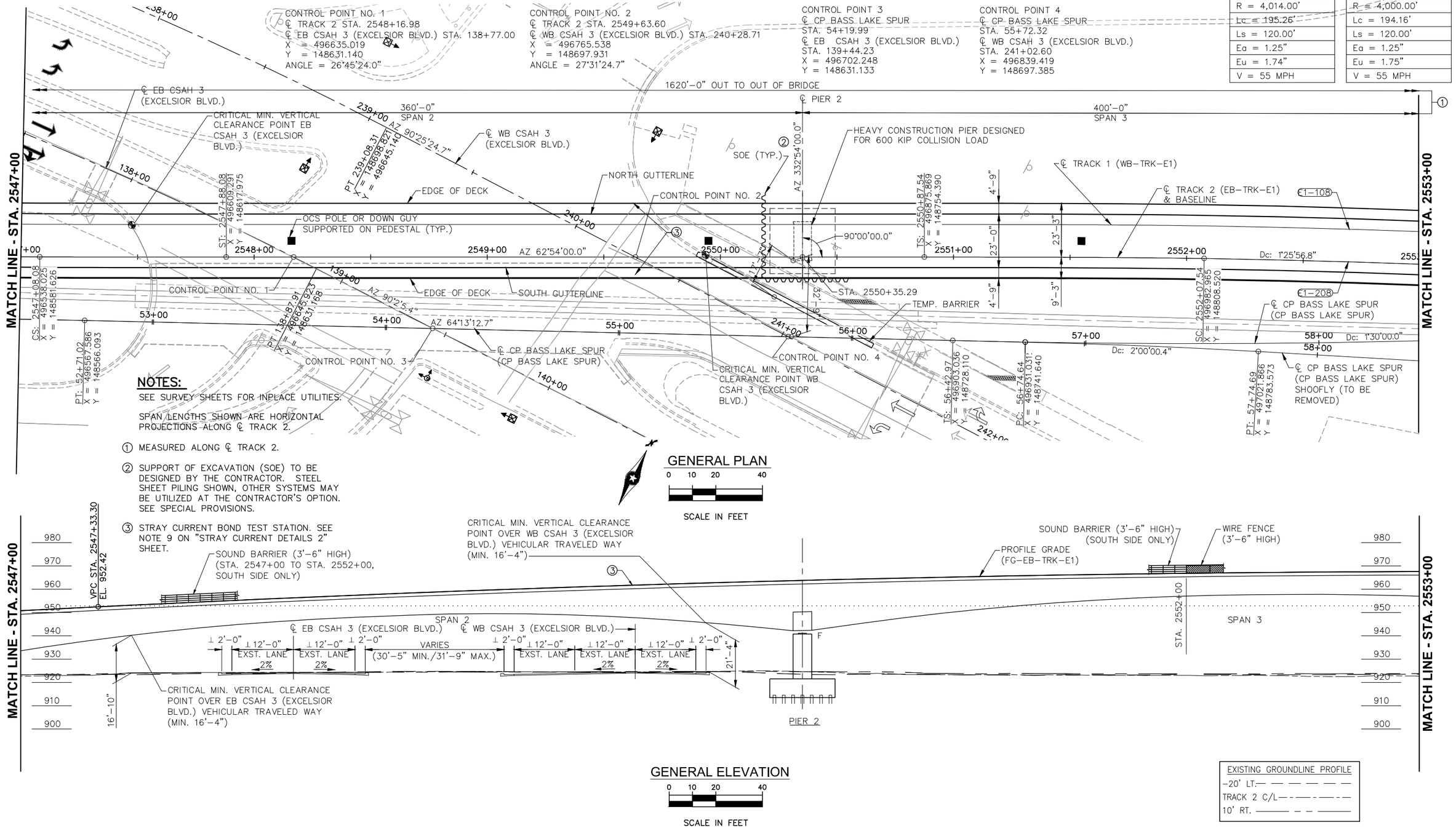

NOTES:

SEE SURVEY SHEETS FOR INPLACE UTILITIES.

SPAN LENGTHS SHOWN ARE HORIZONTAL PROJECTIONS ALONG ℄ TRACK 2.

① MEASURED ALONG ℄ TRACK 2.

② SUPPORT OF EXCAVATION (SOE) TO BE DESIGNED BY THE CONTRACTOR. STEEL SHEET PILING SHOWN, OTHER SYSTEMS MAY BE UTILIZED AT THE CONTRACTOR'S OPTION. SEE SPECIAL PROVISIONS.

③ STRAY CURRENT BOND TEST STATION. SEE NOTE 9 ON "STRAY CURRENT DETAILS 2" SHEET.

NO.	DATE	BY	CHECK	DESIGN	REVISION / SUBMITTAL

DESIGNED BY: ETN CHECKED BY: JWJ
DRAWN BY: LSS CHECKED BY: JWJ

AECOM

90% SUBMISSION - 01/22/16

METROPOLITAN COUNCIL

SOUTHWEST Green Line LRT Extension

CIVIL - VOLUME 4D
EXCELSIOR BLVD
BRIDGE 27C10
GENERAL PLAN & ELEVATION 2

DISCIPLINE: STRUCTURE

SHEET NAME: CBR27C10-BRG-GPE-004

SHEET 5 OF 174

Jan, 15 2016 04:05 pm v:\3400_ADC\CAD\SEGMENT E1\PLAN SHEETS\STRUCTURES\CBR27C10\CBR27C10-BRG-GPE-003.dwg By: songers

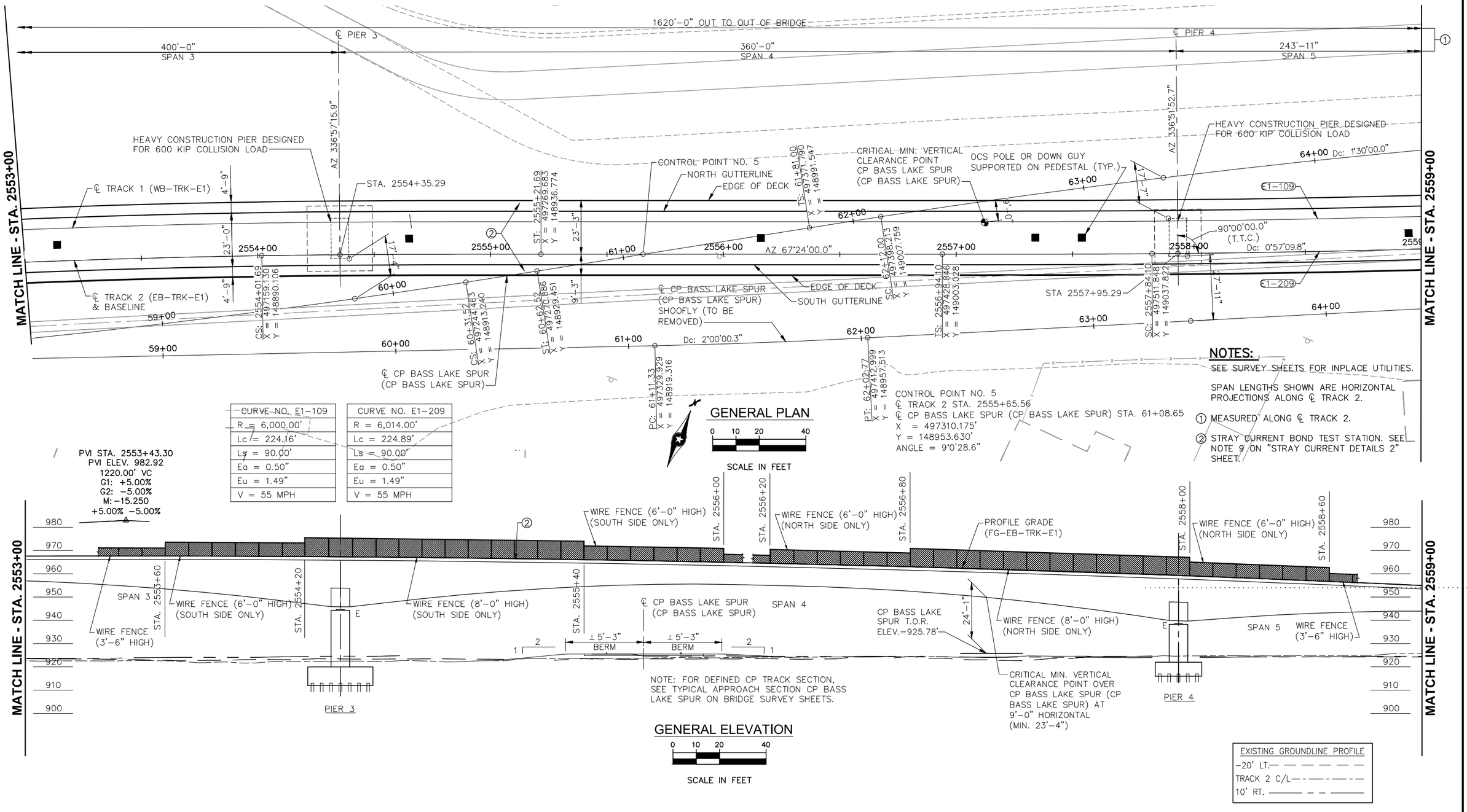

CURVE NO. E1-109	CURVE NO. E1-209
R = 6,000.00'	R = 6,014.00'
Lc = 224.16'	Lc = 224.89'
Ls = 90.00'	Ls = 90.00'
Ea = 0.50"	Ea = 0.50"
Eu = 1.49"	Eu = 1.49"
V = 55 MPH	V = 55 MPH

PVI STA. 2553+43.30
PVI ELEV. 982.92
1220.00' VC
G1: +5.00%
G2: -5.00%
M: -15.250
+5.00% -5.00%

GENERAL PLAN
0 10 20 40
SCALE IN FEET

NOTE: FOR DEFINED CP TRACK SECTION, SEE TYPICAL APPROACH SECTION CP BASS LAKE SPUR ON BRIDGE SURVEY SHEETS.

GENERAL ELEVATION
0 10 20 40
SCALE IN FEET

EXISTING GROUNDLINE PROFILE
-20' LT.
TRACK 2 C/L
10' RT.

NO.	DATE	BY	CHECK	DESIGN	REVISION / SUBMITTAL

DESIGNED BY: ETN CHECKED BY: JWJ
DRAWN BY: LSS CHECKED BY: JWJ

AECOM

90% SUBMISSION - 01/22/16

METROPOLITAN COUNCIL
SOUTHWEST Green Line LRT Extension

CIVIL - VOLUME 4D
EXCELSIOR BLVD
BRIDGE 27C10
GENERAL PLAN & ELEVATION 3

DISCIPLINE: STRUCTURE
SHEET NAME: CBR27C10-BRG-GPE-005

SHEET 6 OF 174

Jan. 15 2016 09:39 am V:\3400_ADC\CAD\SEGMENT E1\PLAN SHEETS\STRUCTURES\CBR27C10\CBR27C10-BRG-GPE-003.dwg By: songers

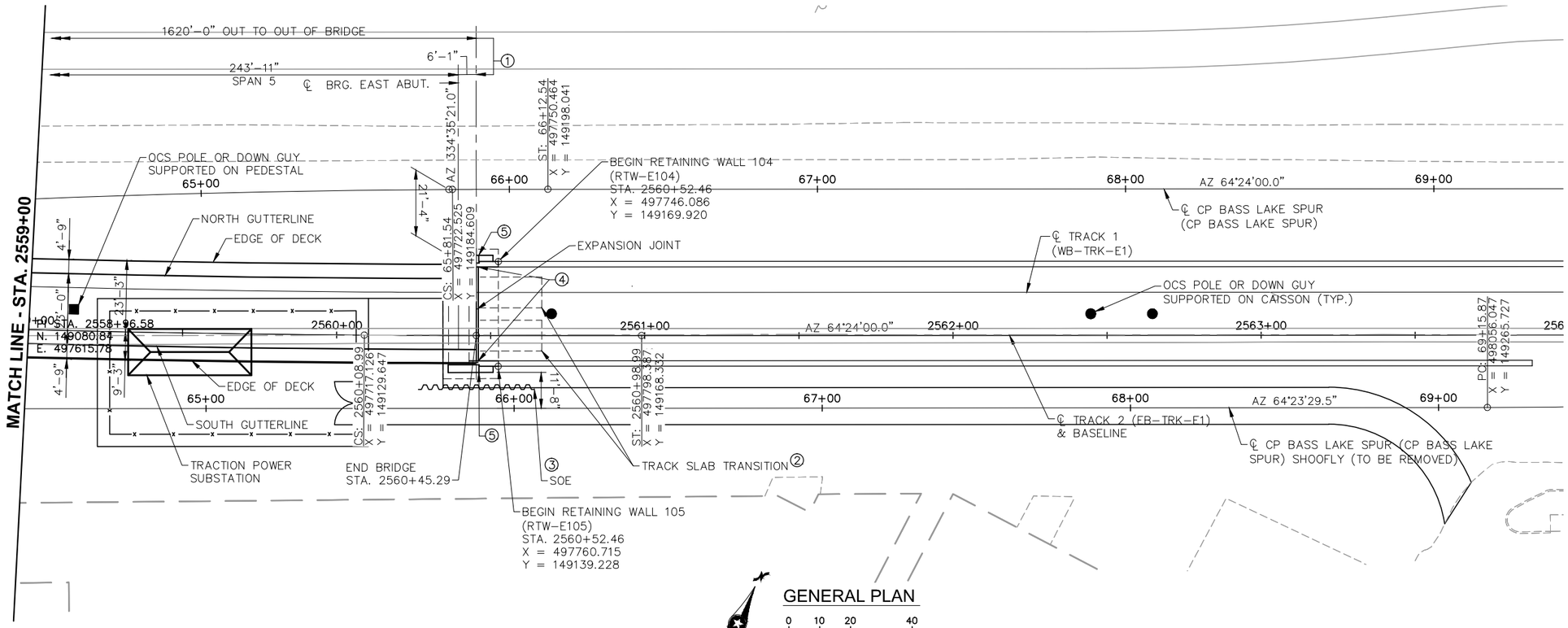

NOTES:

SEE SURVEY SHEETS FOR INPLACE UTILITIES.

SPAN LENGTHS SHOWN ARE HORIZONTAL PROJECTIONS ALONG ℄ TRACK 2.

① MEASURED ALONG ℄ TRACK 2.

② SEE TRACK PLANS FOR TRANSITION SLAB DETAILS.

③ SUPPORT OF EXCAVATION (SOE) TO BE DESIGNED BY THE CONTRACTOR. STEEL SHEET PILING SHOWN. OTHER SYSTEMS MAY BE UTILIZED AT THE CONTRACTOR'S OPTION. SEE SPECIAL PROVISIONS.

④ STRAY CURRENT BOND TEST STATION. SEE NOTE 8 ON "STRAY CURRENT DETAILS 2" SHEET.

⑤ STRAY CURRENT BOND TEST STATION. SEE NOTE 7 ON "STRAY CURRENT DETAILS 2" SHEET.

NO.	DATE	BY	CHECK	DESIGN	REVISION / SUBMITTAL

DESIGNED BY: ETN | CHECKED BY: JWJ
DRAWN BY: LSS | CHECKED BY: JWJ

AECOM

90% SUBMISSION - 01/22/16

METROPOLITAN COUNCIL

SOUTHWEST Green Line LRT Extension

CIVIL - VOLUME 4D
EXCELSIOR BLVD
BRIDGE 27C10
GENERAL PLAN & ELEVATION 4

DISCIPLINE: STRUCTURE

SHEET NAME: CBR27C10-BRG-GPE-006

SHEET 7 OF 174

Jan, 18 2016 06:53 am v:\3400_ADC\CAD\SEGMENT E1\PLAN SHEETS\STRUCTURES\CBR27C10\CBR27C10-BRG-GPE-003.dwg By: songers

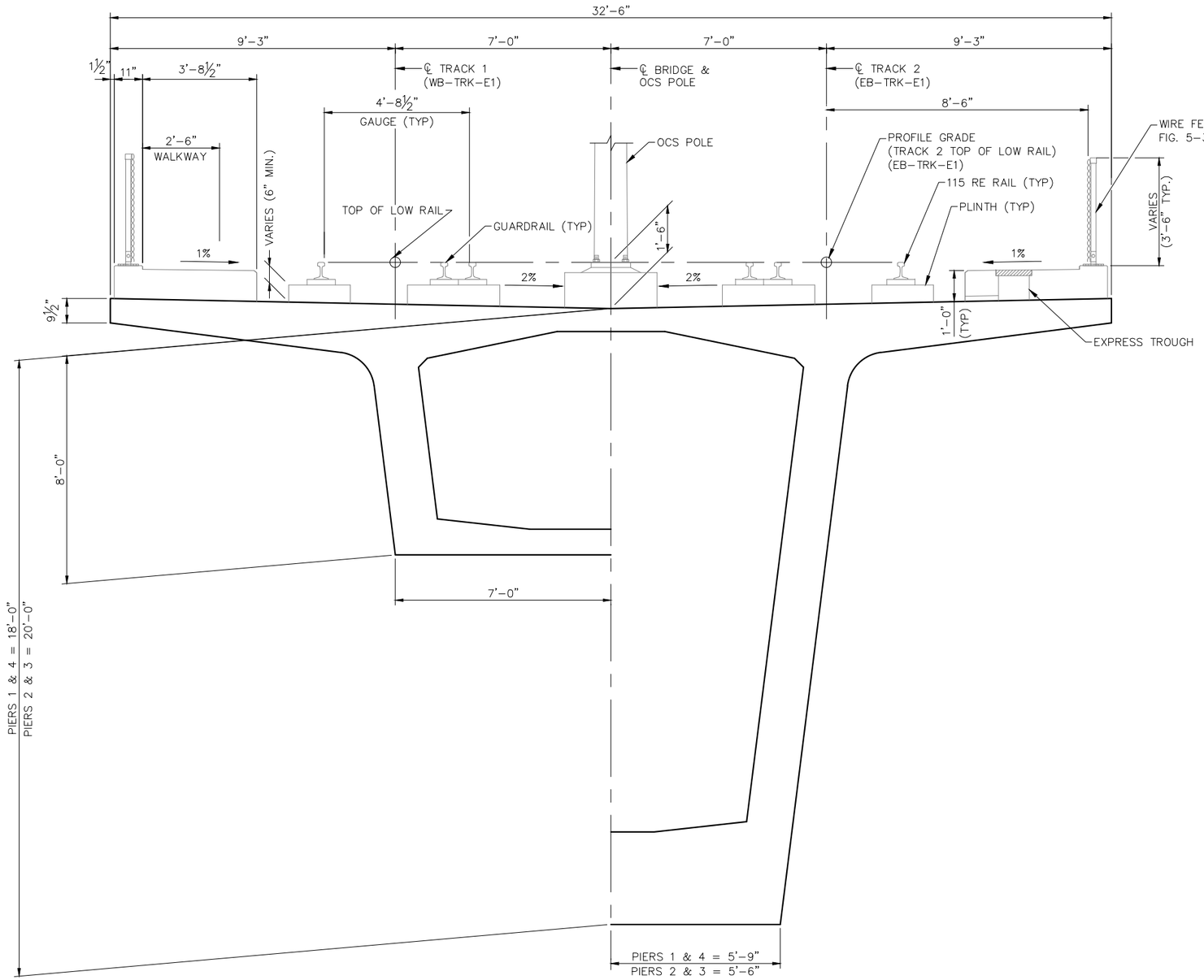

MINIMUM DEPTH SECTION

MAXIMUM DEPTH SECTION

TRANSVERSE SECTION

(LOOKING UPSTATION)

0 1 2 4

SCALE IN FEET

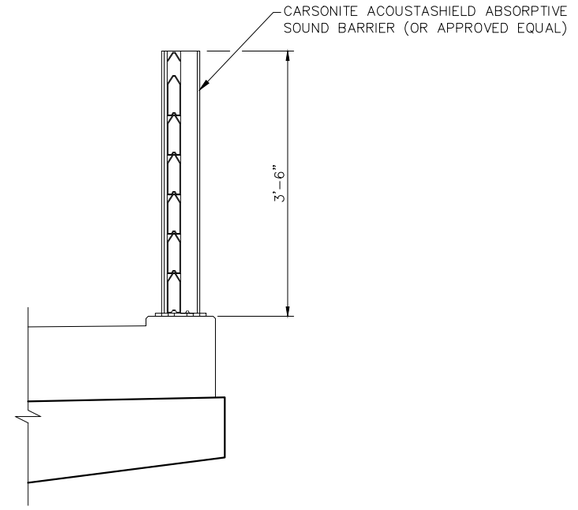

DETAIL

(STA. 2547+00 TO STA. 2552+00, SOUTH SIDE ONLY)
(SEE "SOUND BARRIER DETAILS" SHEET)

NO.	DATE	BY	CHECK	DESIGN	REVISION / SUBMITTAL

DESIGNED BY: ETN CHECKED BY: JWJ

DRAWN BY: JWH CHECKED BY: JWJ

AECOM

90% SUBMISSION - 01/22/16

METROPOLITAN COUNCIL

SOUTHWEST Green Line LRT Extension

CIVIL - VOLUME 4D
EXCELSIOR BLVD
BRIDGE 27C10
TRANSVERSE SECTION

DISCIPLINE: STRUCTURE

SHEET NAME: CBR27C10-BRG-GPE-007

SHEET 8 OF 174

Jan, 18 2016 10:09 am C:\Users\HodgesJ\appdata\local\temp\AcPublish_4412\CBR27C10-BRG-GPE-007.dwg By: hodgesj

BEGINNING P.T.			
	STATION	COORDINATES	
		X	Y
P.T.	2543+00.00	496168.328	148408.795

CURVE 1			
	STATION	COORDINATES	
		X	Y
P.C.	2545+02.34	496350.529	148496.795
P.I.	2545+29.81	496375.266	148508.743
P.C.C.	2545+57.28	496399.956	148520.789
DELTA	00° 13' 43.7" LT.		
R	13,759.24'		
Lc	54.94'		

CURVE 2			
	STATION	COORDINATES	
		X	Y
P.C.C.	2545+57.28	496399.956	148520.789
P.I.	2546+32.60	496467.649	148553.818
P.C.C.	2547+07.92	496534.838	148587.862
DELTA	00° 51' 45.0" LT.		
R	10,007.00'		
Lc	150.64'		

CURVE 3			
	STATION	COORDINATES	
		X	Y
P.C.C.	2547+07.92	496534.838	148587.862
P.I.	2547+35.41	496559.355	148600.285
P.T.	2547+62.89	496583.823	148612.806
DELTA	00° 13' 44.0" LT.		
R	13,759.24'		
Lc	54.97		

CURVE 4			
	STATION	COORDINATES	
		X	Y
P.C.	2551+07.35	496890.465	148769.723
P.I.	2551+37.36	496917.180	148783.393
P.C.C.	2551+67.37	496943.977	148796.900
DELTA	00° 21' 03.6" RT.		
R	9798.36'		
Lc	60.02'		

CURVE 5			
	STATION	COORDINATES	
		X	Y
P.C.C.	2551+67.37	496943.977	148796.900
P.I.	2551+87.40	496961.864	148805.915
P.C.C.	2552+07.43	496979.830	148814.771
DELTA	00° 30' 29.9" RT.		
R	4515.15'		
Lc	40.06'		

CURVE 6			
	STATION	COORDINATES	
		X	Y
P.C.C.	2552+07.43	496979.830	148814.771
P.I.	2553+04.68	497067.075	148857.778
P.C.C.	2554+01.93	497156.304	148896.501
DELTA	2° 46' 52.0" RT.		
R	4007.00'		
Lc	194.50'		

CURVE 7			
	STATION	COORDINATES	
		X	Y
P.C.C.	2554+01.93	497156.304	148896.501
P.I.	2554+21.97	497174.683	148904.477
P.C.C.	2554+42.00	497193.132	148912.290
DELTA	00° 30' 30.6" RT.		
R	4515.15'		
Lc	40.07'		

CURVE 8			
	STATION	COORDINATES	
		X	Y
P.C.C.	2554+42.00	497193.132	148912.290
P.I.	2554+72.02	497220.776	148923.996
P.T.	2555+02.04	497248.491	148935.533
DELTA	00° 21' 04.0" RT.		
R	9798.36'		
Lc	60.04'		

CURVE 9			
	STATION	COORDINATES	
		X	Y
P.C.	2557+04.45	497435.358	149013.318
P.I.	2557+24.46	497453.831	149021.008
P.C.C.	2557+44.47	497472.290	149028.731
DELTA	00° 06' 17.3" LT.		
R	21,881.80'		
Lc	40.02'		

CURVE 10			
	STATION	COORDINATES	
		X	Y
P.C.C.	2557+44.47	497472.290	149028.731
P.I.	2557+64.45	497490.722	149036.443
P.C.C.	2557+84.43	497509.110	149044.259
DELTA	00° 19' 26.4" LT.		
R	7066.08'		
Lc	39.96'		

CURVE 11			
	STATION	COORDINATES	
		X	Y
P.C.C.	2557+84.43	497509.110	149044.259
P.I.	2558+96.74	497612.482	149088.199
P.C.C.	2560+09.05	497714.139	149135.973
DELTA	2° 08' 33.0" LT.		
R	6007.00'		
Lc	224.62'		

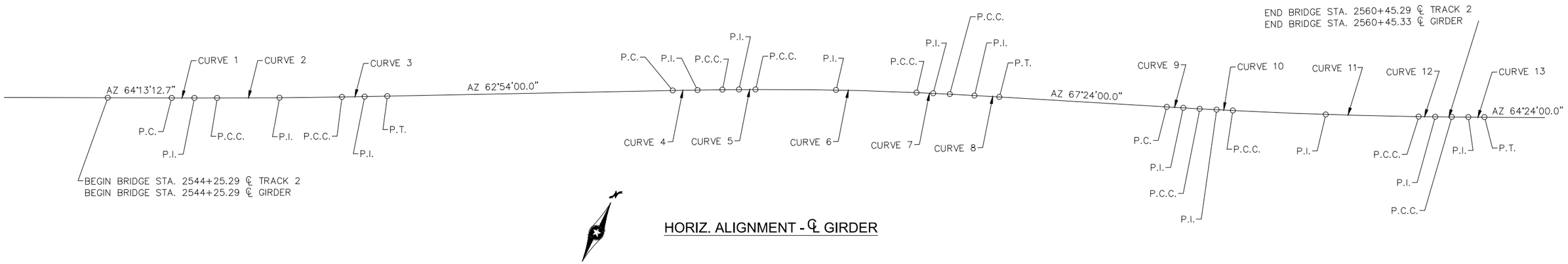

HORIZ. ALIGNMENT - ℄ GIRDER

CURVE 12			
	STATION	COORDINATES	
		X	Y
P.C.C.	2560+09.05	497714.139	149135.973
P.I.	2560+29.03	497732.221	149144.471
P.C.C.	2560+49.01	497750.256	149153.071
DELTA	00° 19' 26.4" LT.		
R	7066.08'		
Lc	39.96'		

CURVE 13			
	STATION	COORDINATES	
		X	Y
P.C.C.	2560+49.01	497750.256	149153.071
P.I.	2560+69.01	497768.304	149161.678
P.T.	2560+89.00	497786.336	149170.317
DELTA	00° 06' 16.9" LT.		
R	21,881.80'		
Lc	39.99'		

ENDING P.T.			
	STATION	COORDINATES	
		X	Y
P.T.	2562+00.00	497886.439	149218.279

NOTES:

STATIONS SHOWN IN TABLES ARE GIVEN ALONG ℄ GIRDER ALIGNMENT.

ALIGNMENT SHOWN IS FOR LOCATION OF ℄ GIRDER ONLY. FOR TRACK AND BASELINE ALIGNMENT, SEE "GENERAL PLAN & ELEVATION" SHEETS.

NO.	DATE	BY	CHECK	DESIGN	REVISION / SUBMITTAL

DESIGNED BY: ETN CHECKED BY: JWJ
DRAWN BY: JWH CHECKED BY: JWJ

AECOM

90% SUBMISSION - 01/22/16

METROPOLITAN COUNCIL

SOUTHWEST Green Line LRT Extension

CIVIL - VOLUME 4D
EXCELSIOR BLVD
BRIDGE 27C10
HORIZONTAL ALIGNMENT CONTROL PLAN

DISCIPLINE: STRUCTURE

SHEET NAME: CBR27C10-BRG-GPE-008

SHEET 9 OF 174

Jan, 15 2016 02:26 pm V:\3400_ADC\CAD\SEGMENT E1\PLAN SHEETS\STRUCTURES\CBR27C10\CBR27C10-BRG-GPE-008.dwg By: hodgesj

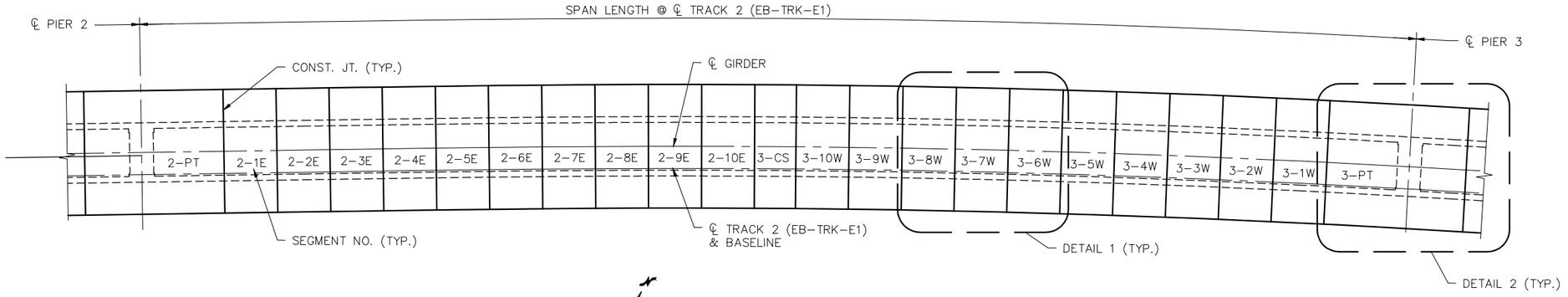

BOX GIRDER PLAN
(SPAN 3 SHOWN, OTHER SPANS SIMILAR)

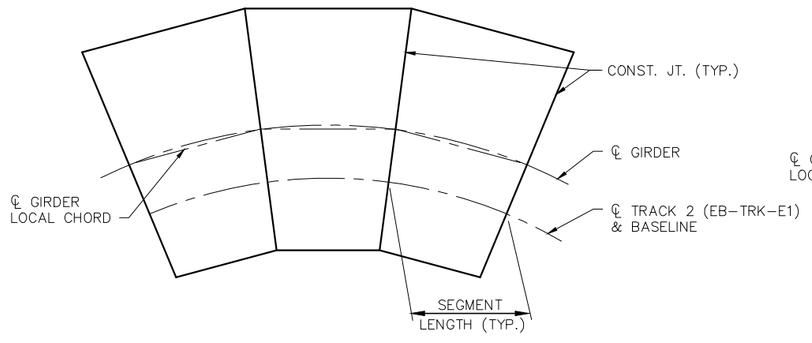

DETAIL 1

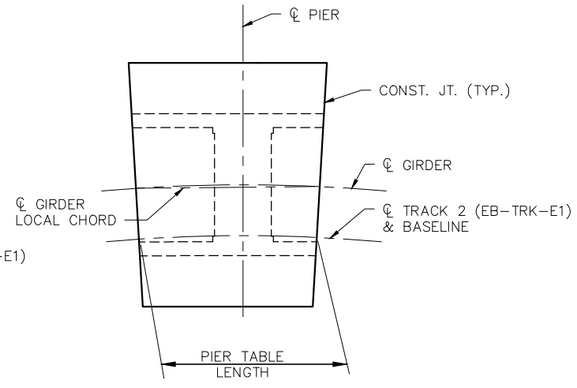

DETAIL 2

NOTES:

SPAN AND SEGMENT LENGTHS ARE HORIZONTAL PROJECTIONS ALONG ℄ TRACK 2.

NO.	DATE	BY	CHECK	DESIGN	REVISION / SUBMITTAL

DESIGNED BY: ETN | CHECKED BY: JWJ
DRAWN BY: TMW | CHECKED BY: JWJ

AECOM

90% SUBMISSION - 01/22/16

METROPOLITAN COUNCIL

SOUTHWEST Green Line LRT Extension

CIVIL - VOLUME 4D
EXCELSIOR BLVD
BRIDGE 27C10
TREATMENT OF HORIZONTAL CURVATURE

DISCIPLINE: STRUCTURE

SHEET NAME: CBR27C10-BRG-GPE-009

SHEET 10 OF 174

Jan, 15 2016 02:27 pm V:\3400_ADC\CAD\SEGMENT E1\PLAN SHEETS\STRUCTURES\CBR27C10\CBR27C10-BRG-GPE-009.dwg By: hodgesj

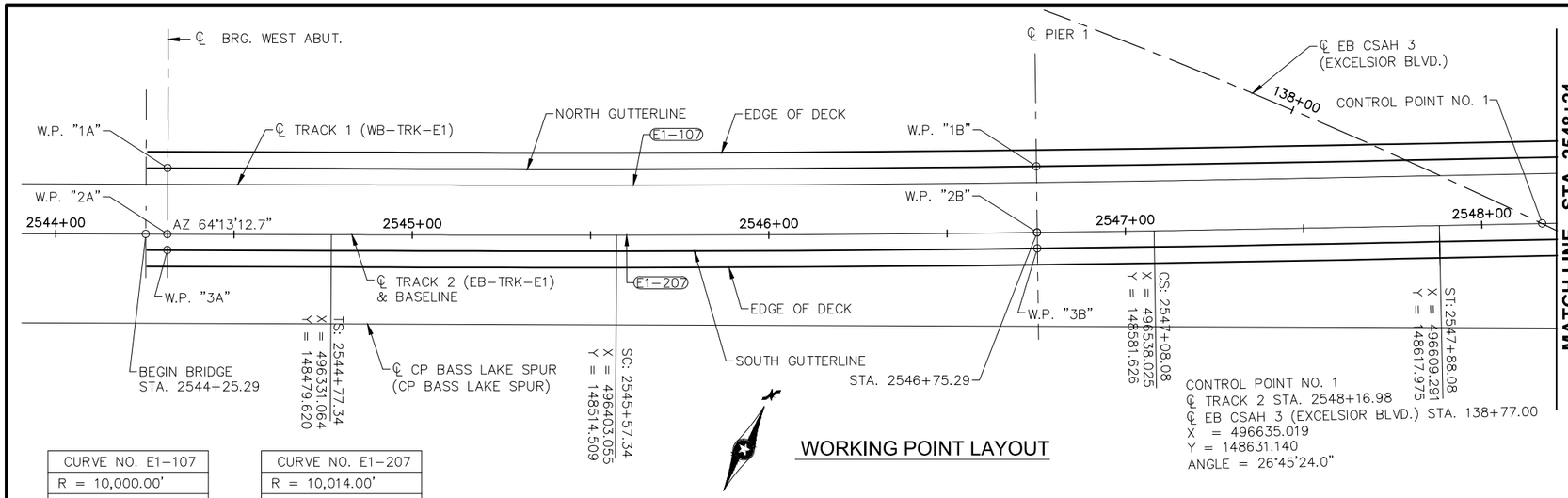

WORKING POINT LAYOUT

CURVE NO. E1–107
R = 10,000.00'
Lc = 150.42'
Ls = 80.00'
Ea = 0.00"
Eu = 1.20"
V = 55 MPH

CURVE NO. E1–207
R = 10,014.00'
Lc = 150.74'
Ls = 80.00'
Ea = 0.00"
Eu = 1.20"
V = 55 MPH

TOP OF DECK TO BRIDGE SEAT

LOCATION	WEST ABUTMENT		PIER 1		PIER 2		PIER 3		PIER 4		EAST ABUTMENT	
℄ BRG. STA.	2544+31.37		2546+75.29		2550+35.29		2554+35.29		2557+95.29		2560+39.21	
PROFILE GRADE	937.32		949.52		963.78		967.32		959.30		948.12	
TOP OF DECK AT ℄ GIRDER	935.82		948.02		962.28		965.82		957.80		946.62	
STRUCTURE DEPTH (FT.)	8.00		18.00		20.00		20.00		18.00		8.00	
LEFT / RIGHT	LT.	RT.	LT.	RT.	LT.	RT.	LT.	RT.	LT.	RT.	LT.	RT.
HORIZONTAL OFFSET (FT.)	–12.5	–1.5	–10.5	–3.5	–10.5	–3.5	–10.5	–3.5	–10.5	–3.5	–12.5	–1.5
ASSUMED BRG. & PLINTH HEIGHT (IN.)	12.0	12.0	15.0	15.0	15.0	15.0	15.0	15.0	15.0	15.0	12.0	12.0
TOP OF DECK TO BRG. SEAT (FT.)	9.00	9.00	19.25	19.25	21.25	21.25	21.25	21.25	19.25	19.25	9.0	9.00
① BEARING SEAT ELEV.	926.82	926.82	928.77	928.77	941.03	941.03	944.57	944.57	938.55	938.55	937.62	937.62

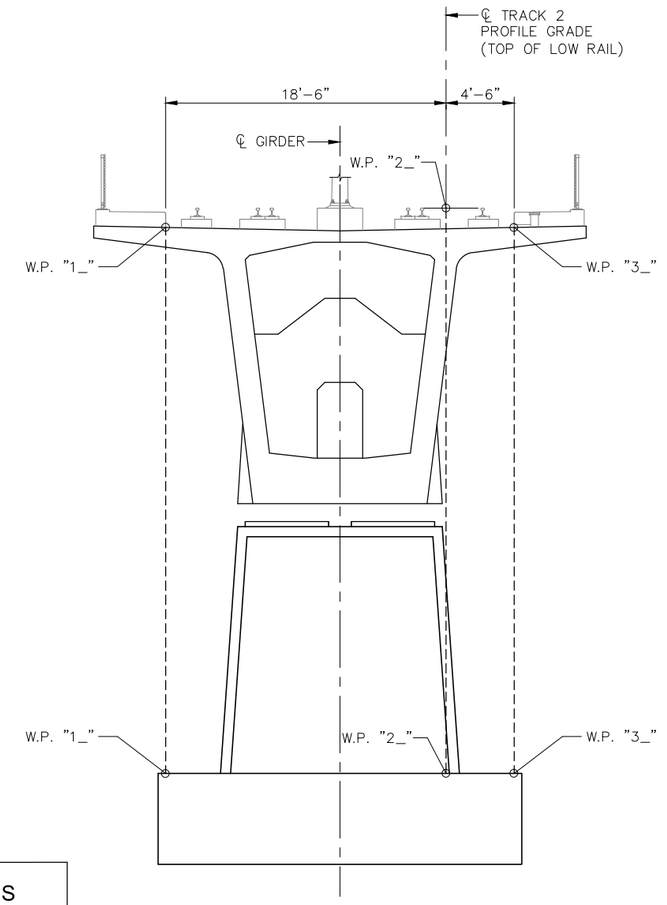

WORKING POINT DETAIL
(LOOKING UPSTATION)

DIMENSIONS BETWEEN WORKING POINTS

POINT	STATION	X–COORDINATE	Y–COORDINATE	1A	1B	1C	1D	1E	1F	2A	2B	2C	2D	2E	2F	3A	3B	3C	3D	3E	3F
1A	2544+31.37	496281.624	148476.286		243.62					18.50	244.52						244.95	604.08			
1B	2546+75.29	496500.443	148583.383			359.87					18.50	360.36				244.82		360.62	760.05		
1C	2550+35.29	496820.932	148747.059				401.20					18.50	400.80			604.26	360.75		400.83	760.84	
1D	2554+35.29	497182.758	148920.387					359.97					18.50	360.59			761.19	401.25		360.88	604.35
1E	2557+95.29	497514.877	149059.222						243.17					18.50	244.23			760.12	360.56		244.70
1F	2560+39.21	497736.507	149159.270												18.50						
2A	2544+31.37	496289.670	148459.628								243.91					4.50	244.00				
2B	2546+75.29	496508.751	148566.853									360.00					4.50	360.03			
2C	2550+35.29	496829.360	148730.590										399.89					4.50	399.71		
2D	2554+35.29	497190.000	148903.363											360.00					4.50	360.06	
2E	2557+95.29	497522.146	149042.210												243.90					4.50	244.03
2F	2560+39.21	497744.445	149142.560																		4.50
3A	2544+31.37	496291.627	148455.576														243.98				
3B	2546+75.29	496510.772	148562.832															360.03			
3C	2550+35.29	496831.410	148726.584																399.57		
3D	2554+35.29	497191.761	148899.222																	360.01	
3E	2557+95.29	497523.914	149038.072																		244.08
3F	2560+39.21	497746.376	149138.495																		

ELEVATIONS

POINT	℄ TRACK 2 TOP OF LOW RAIL	GUTTERLINE	POINT
1A	-	936.05	1A
1B	-	948.25	1B
1C	-	962.51	1C
1D	-	966.05	1D
1E	-	958.03	1E
1F	-	946.85	1F
2A	937.32	-	2A
2B	949.52	-	2B
2C	963.78	-	2C
2D	967.32	-	2D
2E	959.30	-	2E
2F	948.12	-	2F
3A	-	936.05	3A
3B	-	948.25	3B
3C	-	962.51	3C
3D	-	966.05	3D
3E	-	958.03	3E
3F	-	946.85	3F

NOTES:

① FINAL CONSTRUCTION ELEVATIONS FOR BEARING SEATS SHALL BE DETERMINED BY THE CONTRACTOR BASED ON THE ACTUAL HEIGHT OF THE BEARING ASSEMBLIES FURNISHED. FINAL ELEVATIONS SHALL BE REVIEWED AND APPROVED BY THE ENGINEER PRIOR TO STARTING WORK. ANY ADJUSTMENT OF SEAT ELEVATIONS SHALL BE MADE BY THE CONTRACTOR AT NO ADDITIONAL COST TO THE OWNER.

NO.	DATE	BY	CHECK	DESIGN	REVISION / SUBMITTAL

DESIGNED BY: ETN CHECKED BY: JWJ
DRAWN BY: JWH CHECKED BY: JWJ

AECOM

90% SUBMISSION - 01/22/16

METROPOLITAN COUNCIL

SOUTHWEST Green Line LRT Extension

CIVIL - VOLUME 4D
EXCELSIOR BLVD
BRIDGE 27C10
BRIDGE LAYOUT 1

DISCIPLINE: STRUCTURE
SHEET NAME: CBR27C10-BRG-SUP-089

SHEET 11 OF 174

Jan, 15 2016 02:31 pm V:\3400_ADC\CAD\SEGMENT E1\PLAN SHEETS\STRUCTURES\CBR27C10\CBR27C10-BRG-SUP-89.dwg By: hodgesj

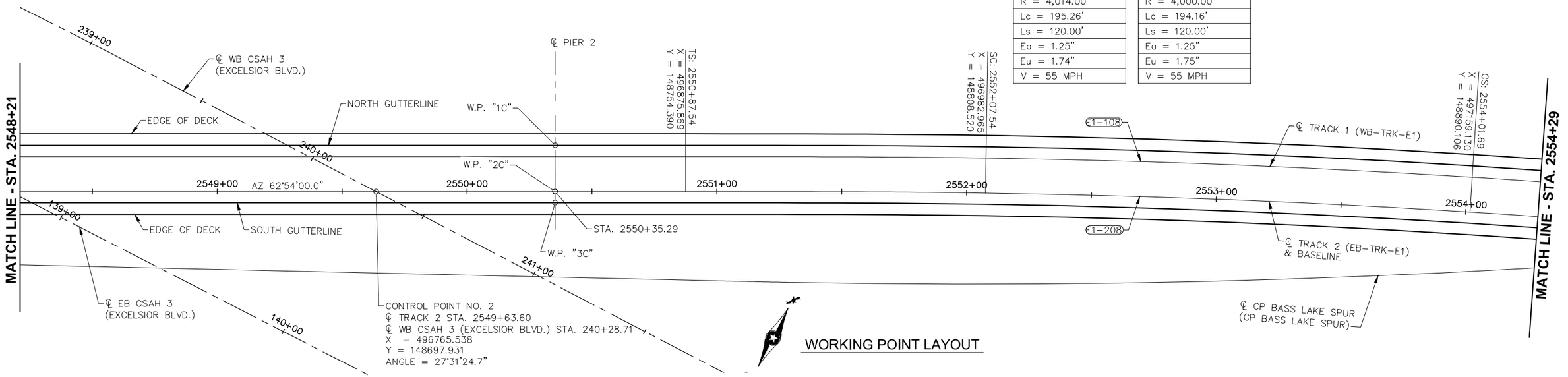

CURVE NO. E1-108
R = 4,014.00'
Lc = 195.26'
Ls = 120.00'
Ea = 1.25"
Eu = 1.74"
V = 55 MPH

CURVE NO. E1-208
R = 4,000.00'
Lc = 194.16'
Ls = 120.00'
Ea = 1.25"
Eu = 1.75"
V = 55 MPH

WORKING POINT LAYOUT

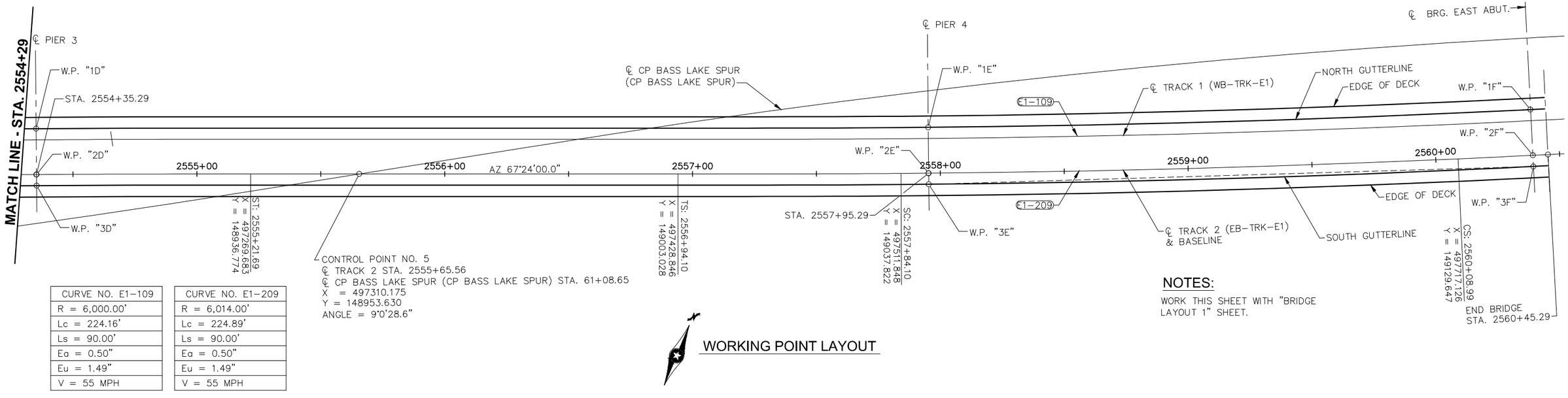

CURVE NO. E1-109
R = 6,000.00'
Lc = 224.16'
Ls = 90.00'
Ea = 0.50"
Eu = 1.49"
V = 55 MPH

CURVE NO. E1-209
R = 6,014.00'
Lc = 224.89'
Ls = 90.00'
Ea = 0.50"
Eu = 1.49"
V = 55 MPH

WORKING POINT LAYOUT

NOTES:

WORK THIS SHEET WITH "BRIDGE LAYOUT 1" SHEET.

NO.	DATE	BY	CHECK	DESIGN	REVISION / SUBMITTAL

DESIGNED BY: ETN CHECKED BY: JWJ
DRAWN BY: JWH CHECKED BY: JWJ

AECOM

90% SUBMISSION - 01/22/16

METROPOLITAN COUNCIL

SOUTHWEST Green Line LRT Extension

CIVIL - VOLUME 4D
EXCELSIOR BLVD
BRIDGE 27C10
BRIDGE LAYOUT 2

DISCIPLINE: STRUCTURE

SHEET NAME: CBR27C10-BRG-SUP-090

SHEET 12 OF 174

Jan. 15 2016 02:31 pm V:\3400_ADC\CAD\SEGMENT E1\PLAN SHEETS\STRUCTURES\CBR27C10\CBR27C10-BRG-SUP-89.dwg By: hodgesj

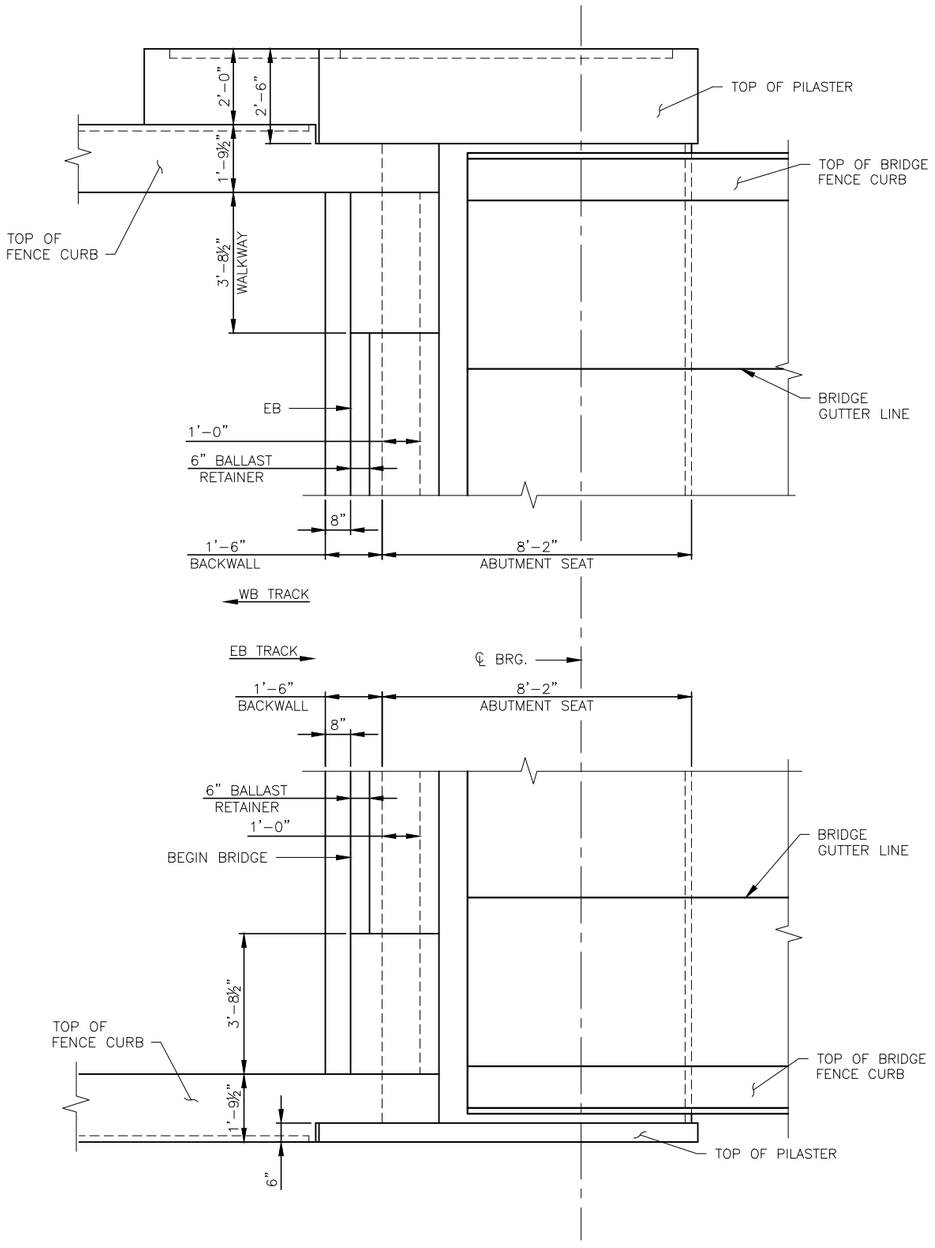

WEST ABUTMENT CORNER DETAIL
1/2" = 1'-0"

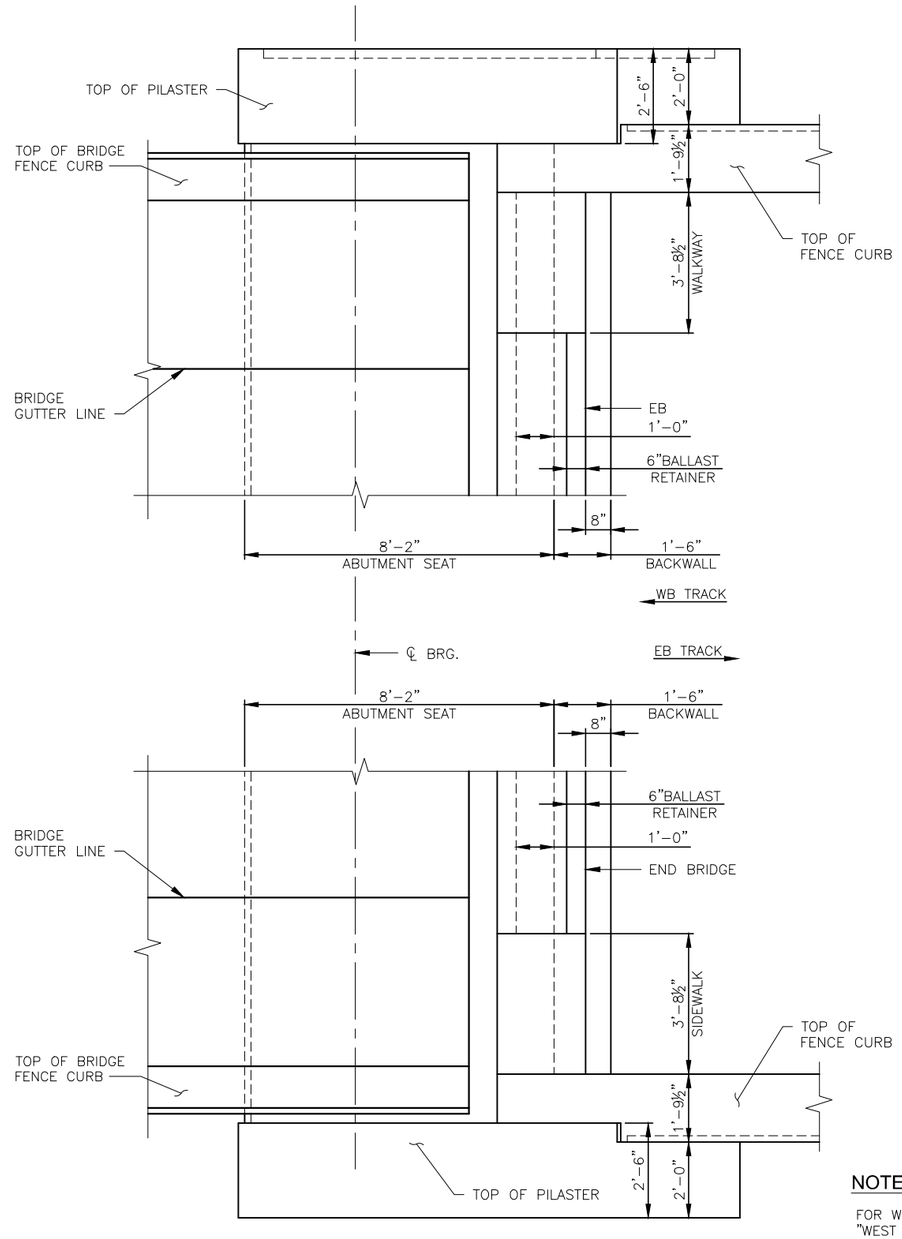

EAST ABUTMENT CORNER DETAIL
1/2" = 1'-0"

NOTES:

FOR WEST ABUTMENT LAYOUT AND DETAILS, SEE "WEST ABUTMENT" DETAIL SHEETS.

FOR EAST ABUTMENT LAYOUT AND DETAILS, SEE "EAST ABUTMENT" DETAIL SHEET.

NO.	DATE	BY	CHECK	DESIGN	REVISION / SUBMITTAL

DESIGNED BY: NMP | CHECKED BY: DST
DRAWN BY: TMW | CHECKED BY: DST

AECOM

90% SUBMISSION - 01/22/16

METROPOLITAN COUNCIL

SOUTHWEST Green Line LRT Extension

CIVIL - VOLUME 4D
EXCELSIOR BLVD
BRIDGE 27C10
CORNER DETAILS

DISCIPLINE: STRUCTURE

SHEET NAME: CBR27C10-BRG-ABT-001

SHEET 13 OF 174

Jan, 18 2016 01:29 pm V:\3400_ADC\CAD\SEGMENT E1\PLAN SHEETS\STRUCTURES\CBR27C10\CBR27C10-BRG-ABT-001.dwg By: songers

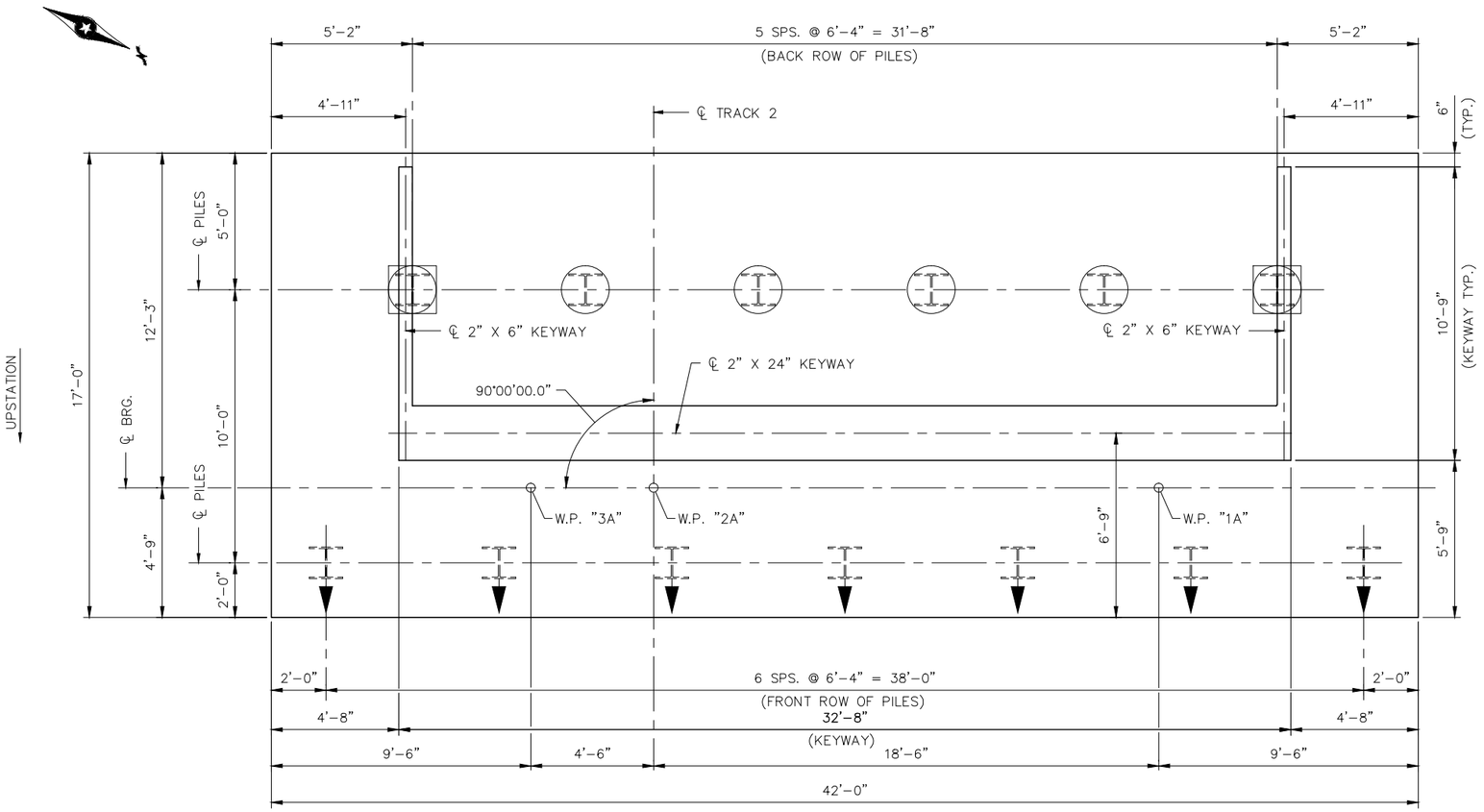

FOOTING PLAN

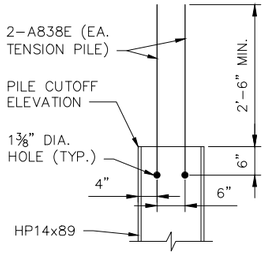

PILE ANCHORAGE DETAIL

WEST ABUTMENT COMPUTED PILE LOAD (TONS/PILE)		
FACTORED DEAD LOAD +EARTH PRESSURE	128	85
FACTORED LIVE LOAD	30	0
FACTORED OVERTURNING	24	−90
FACTORED DESIGN LOAD	182	−−
FACTORED DESIGN UPLIFT	−−	−5
LOAD COMBINATION	STRENGTH V	EXTREME II

WEST ABUTMENT REQUIRED NOMINAL PILE BEARING RESISTANCE FOR H-PILES Rn (TONS/PILE)		
FIELD CONTROL METHOD	ϕdyn	*Rn
MnDOT PILE FORMULA 2012 (MPF12)	0.60	303
PDA	0.65	280

*Rn = (FACTORED DESIGN LOAD)/ϕdyn

NOTES:

2 – STEEL HP TEST PILES 85 FT. LONG
11 – STEEL HP PILES EST. LENGTH 85 FT.
13 – STEEL HP PILES REQ'D FOR WEST ABUTMENT

ALL PILES ARE HP14X89, ASTM A572, GRADE 50.

ALL PILES SHALL BE EQUIPPED WITH PILE TIP PROTECTION (ROCK POINTS).

PILE SPACING SHOWN IS AT BOTTOM OF FOOTING.

ALL PILES TO BE VERTICAL, UNLESS DENOTED OTHERWISE.

PILE MARKED H► TO BE BATTERED 3" PER FT. IN THE DIRECTION SHOWN.

PILE LENGTHS ARE MINIMUM UNLESS APPROVED BY THE ENGINEER.

FOR PILE SPLICE DETAILS, SEE MnDOT STANDARD DETAIL B202. WELDED SPLICES SHALL BE IN ACCORDANCE WITH CONTRACT DOCUMENTS. DRIVE FIT SPLICES WILL NOT BE ALLOWED.

☐ DENOTES TEST PILES.

◯ DENOTES TENSION PILES, SEE PILE ANCHORAGE DETAIL THIS SHEET.

NO.	DATE	BY	CHECK	DESIGN	REVISION / SUBMITTAL

DESIGNED BY: NMP CHECKED BY: DST
DRAWN BY: JWH CHECKED BY: DST

AECOM

90% SUBMISSION - 01/22/16

METROPOLITAN COUNCIL

SOUTHWEST Green Line LRT Extension

CIVIL - VOLUME 4D
EXCELSIOR BLVD
BRIDGE 27C10
WEST ABUTMENT FOOTING DETAILS

DISCIPLINE: STRUCTURE
SHEET NAME: CBR27C10-BRG-ABT-002

SHEET 14 OF 174

Jan, 18 2016 01:30 pm v:\3400_ADC\CAD\SEGMENT E1\PLAN SHEETS\STRUCTURES\CBR27C10\CBR27C10-BRG-ABT-002.dwg By: songers

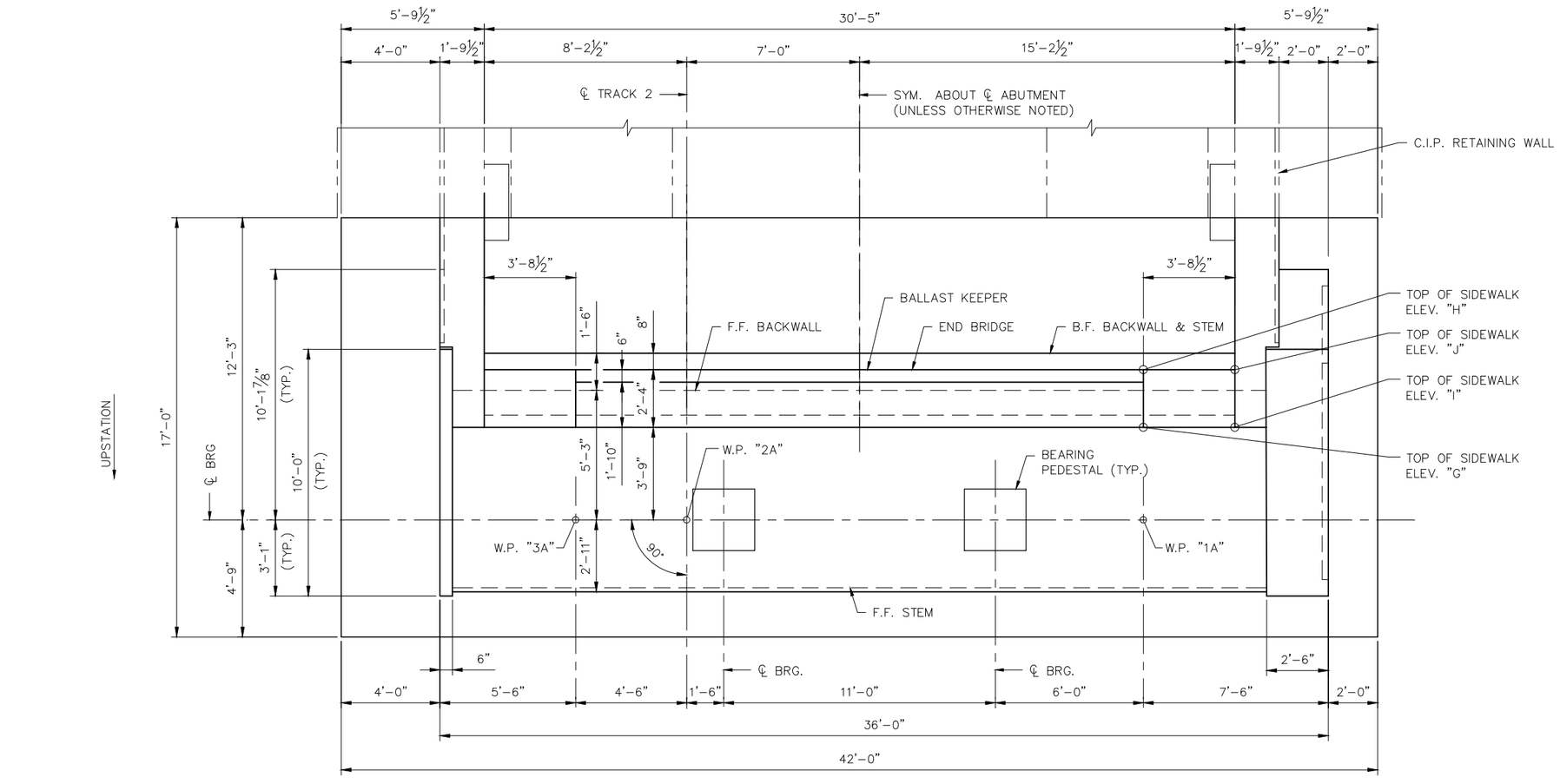

PLAN

NO.	DATE	BY	CHECK	DESIGN	REVISION / SUBMITTAL

DESIGNED BY: NMP CHECKED BY: DST
DRAWN BY: JWH CHECKED BY: DST

AECOM

90% SUBMISSION - 01/22/16

METROPOLITAN COUNCIL

SOUTHWEST Green Line LRT Extension

CIVIL - VOLUME 4D
EXCELSIOR BLVD
BRIDGE 27C10
WEST ABUTMENT DETAILS 1

DISCIPLINE: STRUCTURE

SHEET NAME: CBR27C10-BRG-ABT-003

SHEET 15 OF 174

Jan, 18 2016 01:32 pm V:\3400_ADC\CAD\SEGMENT E1\PLAN SHEETS\STRUCTURES\CBR27C10\CBR27C10-BRG-ABT-003.dwg By: songers

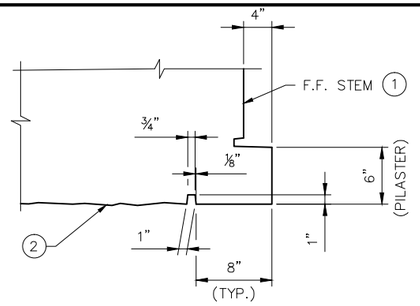

POINT	ELEV.
"A"	936.32
"B"	933.49
"C"	935.64
"D"	935.87
"E"	935.55
"F"	935.78
"G"	936.87
"H"	936.75
"I"	936.90
"J"	936.79
"K"	937.03
"L"	936.60
"M"	937.37
"N"	926.27

SECTION D-D

NOTES:

(1) ARCHITECTURAL CONCRETE TEXTURE (RECTANGULAR GRID) WITH ARCHITECTURAL SURFACE FINISH (SINGLE COLOR).

(2) ARCHITECTURAL CONCRETE TEXTURE (LIMESTONE) WITH ARCHITECTURAL SURFACE FINISH (SINGLE COLOR).

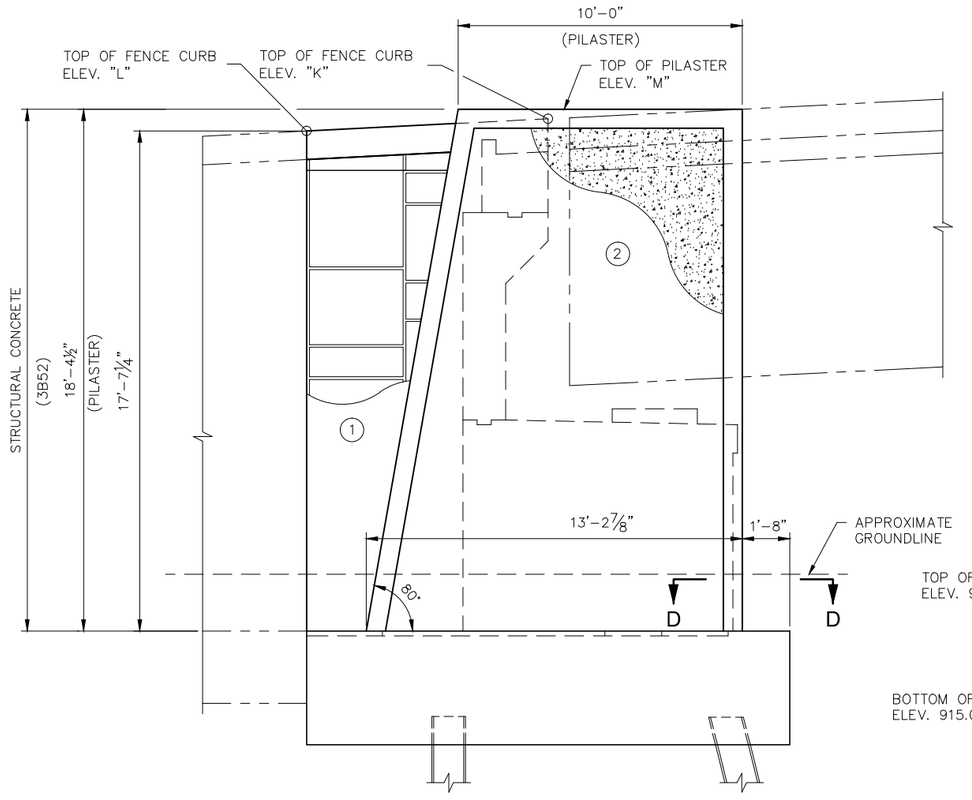

VIEW A-A

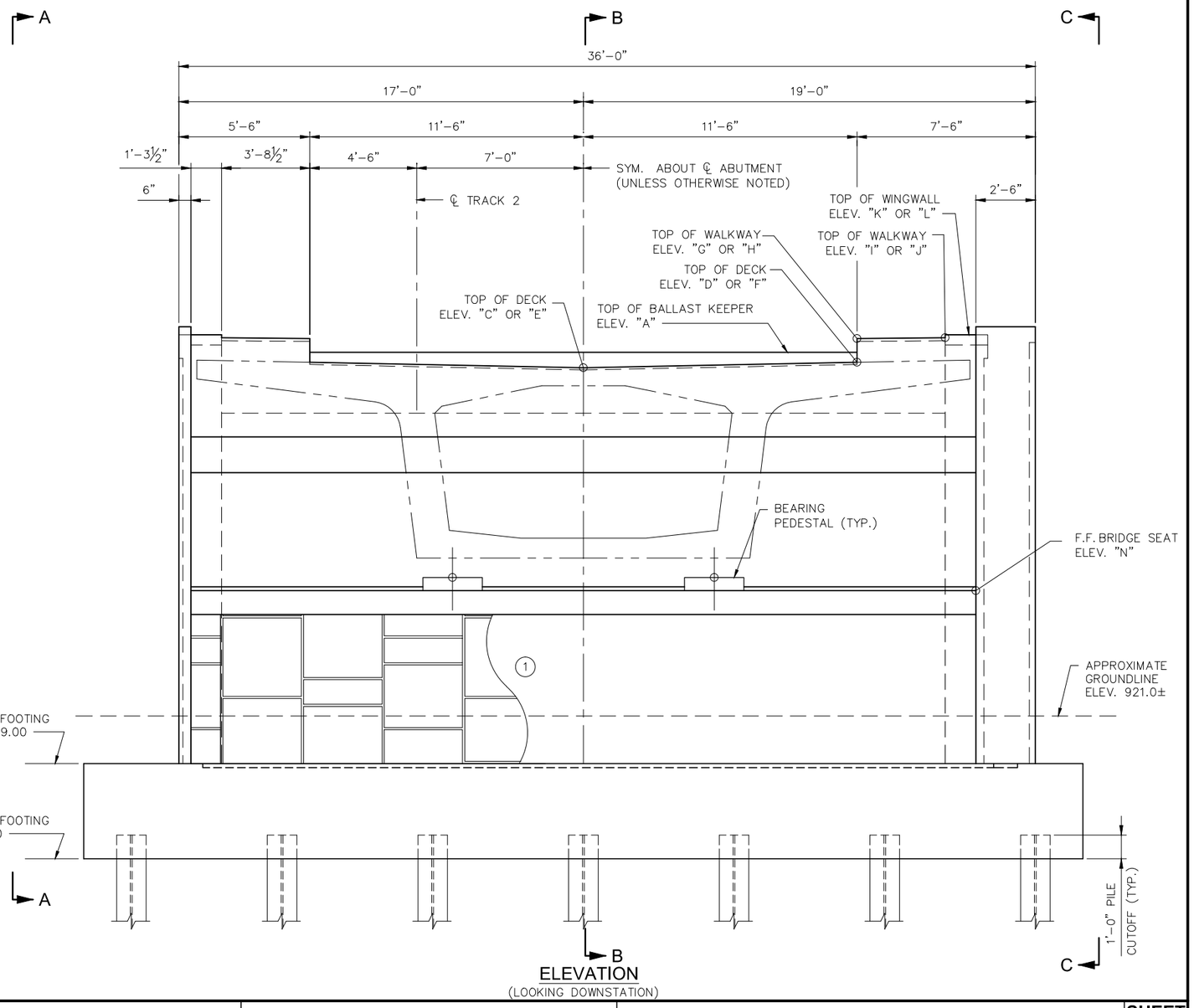

ELEVATION
(LOOKING DOWNSTATION)

NO.	DATE	BY	CHECK	DESIGN	REVISION / SUBMITTAL

DESIGNED BY: NMP | CHECKED BY: DST
DRAWN BY: JWH | CHECKED BY: DST

AECOM

90% SUBMISSION - 01/22/16

METROPOLITAN COUNCIL

SOUTHWEST Green Line LRT Extension

CIVIL - VOLUME 4D
EXCELSIOR BLVD
BRIDGE 27C10
WEST ABUTMENT DETAILS 2

DISCIPLINE: STRUCTURE

SHEET NAME: CBR27C10-BRG-ABT-004

SHEET 16 OF 174

Jan. 18 2016 01:32 pm V:\3400_ADC\CAD\SEGMENT E1\PLAN SHEETS\STRUCTURES\CBR27C10\CBR27C10-BRG-ABT-003.dwg By: songers

NOTES:

1. ARCHITECTURAL CONCRETE TEXTURE (RECTANGULAR GRID) WITH ARCHITECTURAL SURFACE FINISH (SINGLE COLOR).
2. ARCHITECTURAL CONCRETE TEXTURE (LIMESTONE) WITH ARCHITECTURAL SURFACE FINISH (SINGLE COLOR).

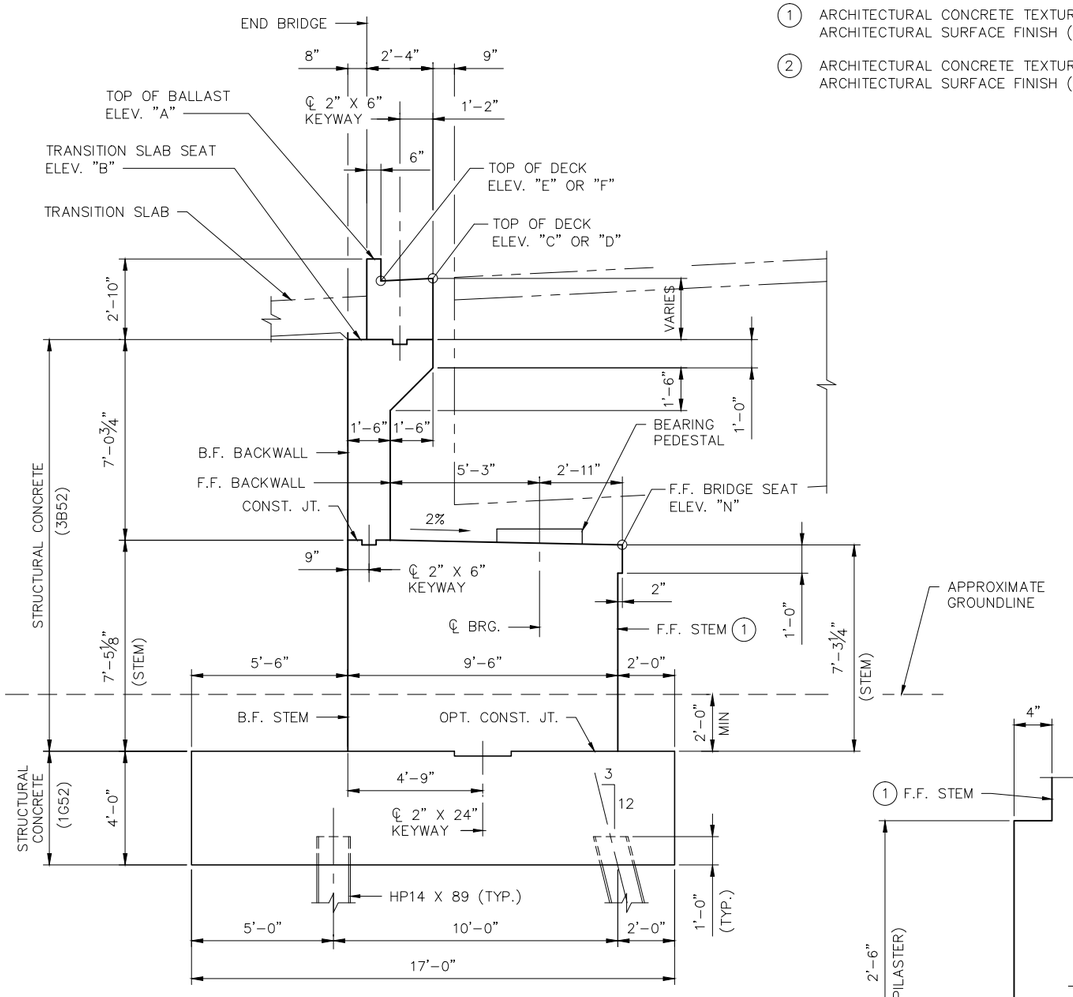

SECTION B-B

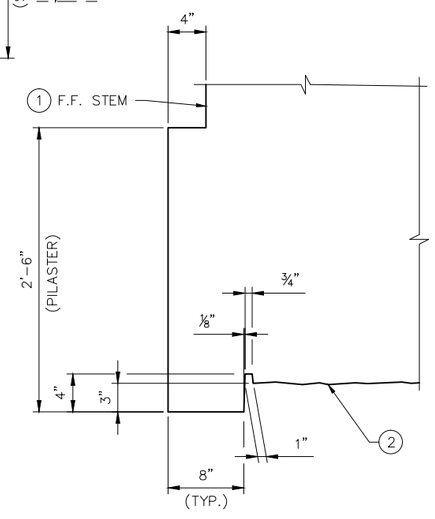

SECTION E-E

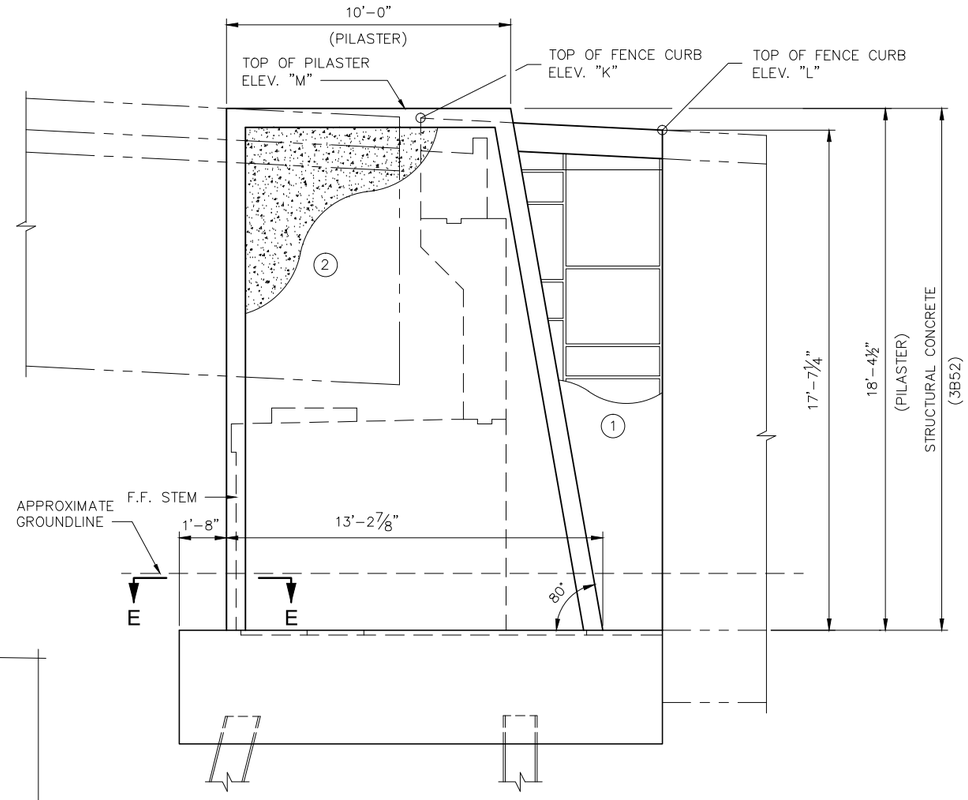

VIEW C-C

NO.	DATE	BY	CHECK	DESIGN	REVISION / SUBMITTAL

DESIGNED BY: NMP | CHECKED BY: DST
DRAWN BY: JWH | CHECKED BY: DST

AECOM

90% SUBMISSION - 01/22/16

METROPOLITAN COUNCIL

SOUTHWEST Green Line LRT Extension

CIVIL - VOLUME 4D
EXCELSIOR BLVD
BRIDGE 27C10
WEST ABUTMENT DETAILS 3

DISCIPLINE: STRUCTURE
SHEET NAME: CBR27C10-BRG-ABT-005

SHEET 17 OF 174

Jan, 18 2016 02:58 pm v:\3400_ADC\CAD\SEGMENT E1\PLAN SHEETS\STRUCTURES\CBR27C10\CBR27C10-BRG-ABT-003.dwg By: songers

NOTES:

F.F. DENOTES FRONT FACE
B.F. DENOTES BACK FACE
E.E. DENOTES EACH END

(1) WHEN THE PLACEMENT OF THE NOTED BAR IS IMPACTED BY THE PILE, BARS SHALL BE RAISED TO CLEAR THE TOP OF PILE.

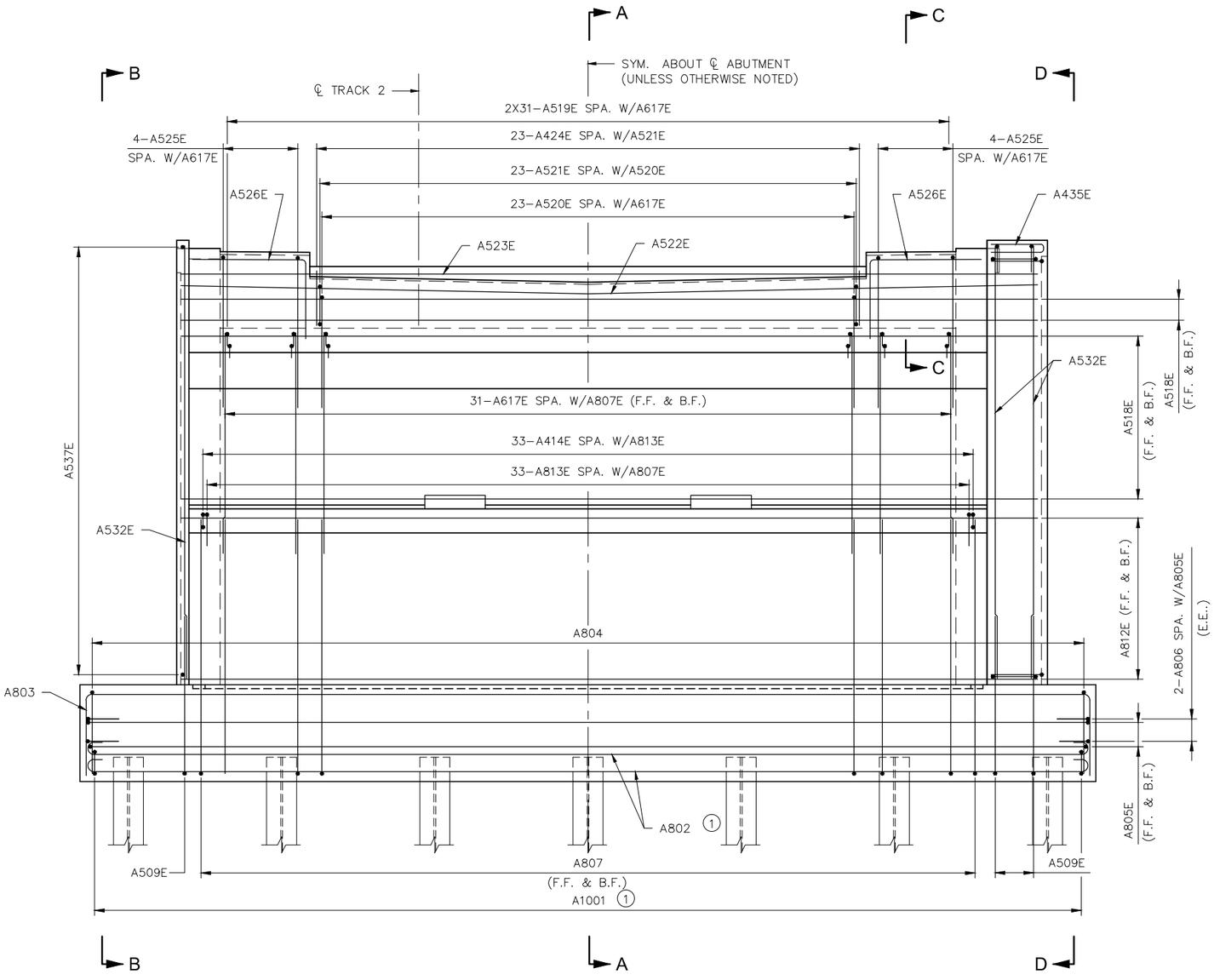

ELEVATION

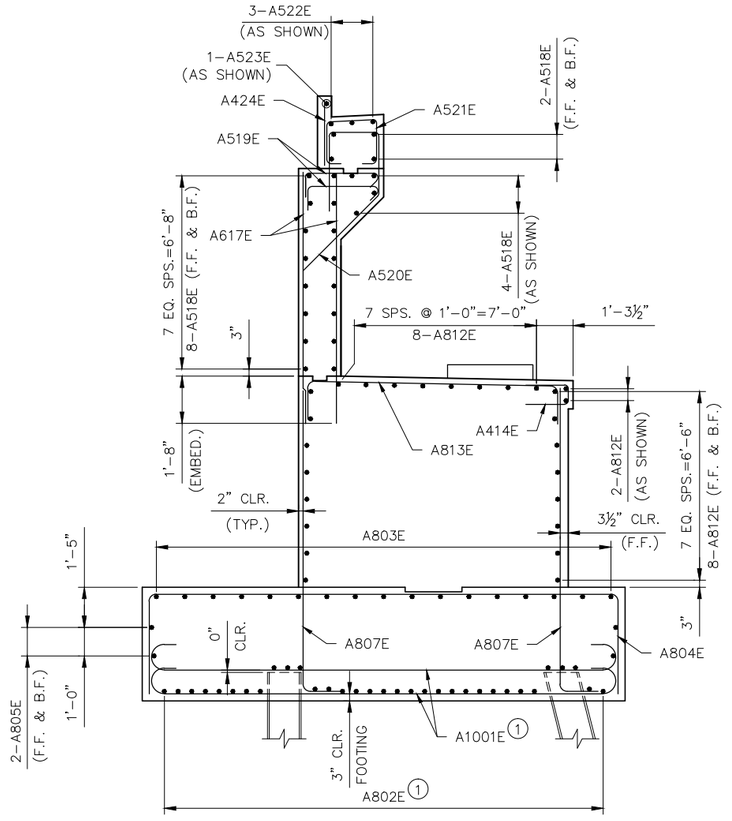

SECTION A-A

NO.	DATE	BY	CHECK	DESIGN	REVISION / SUBMITTAL

DESIGNED BY: NMP | CHECKED BY: DST
DRAWN BY: JWH | CHECKED BY: DST

AECOM

90% SUBMISSION - 01/22/16

METROPOLITAN COUNCIL

SOUTHWEST Green Line LRT Extension

CIVIL - VOLUME 4D
EXCELSIOR BLVD
BRIDGE 27C10
WEST ABUTMENT REINFORCEMENT 1

DISCIPLINE: STRUCTURE
SHEET NAME: CBR27C10-BRG-ABT-006

SHEET 18 OF 174

Jan, 18 2016 01:35 pm v:\3400_ADC\CAD\SEGMENT E1\PLAN SHEETS\STRUCTURES\CBR27C10\CBR27C10-BRG-ABT-006.dwg By: songers

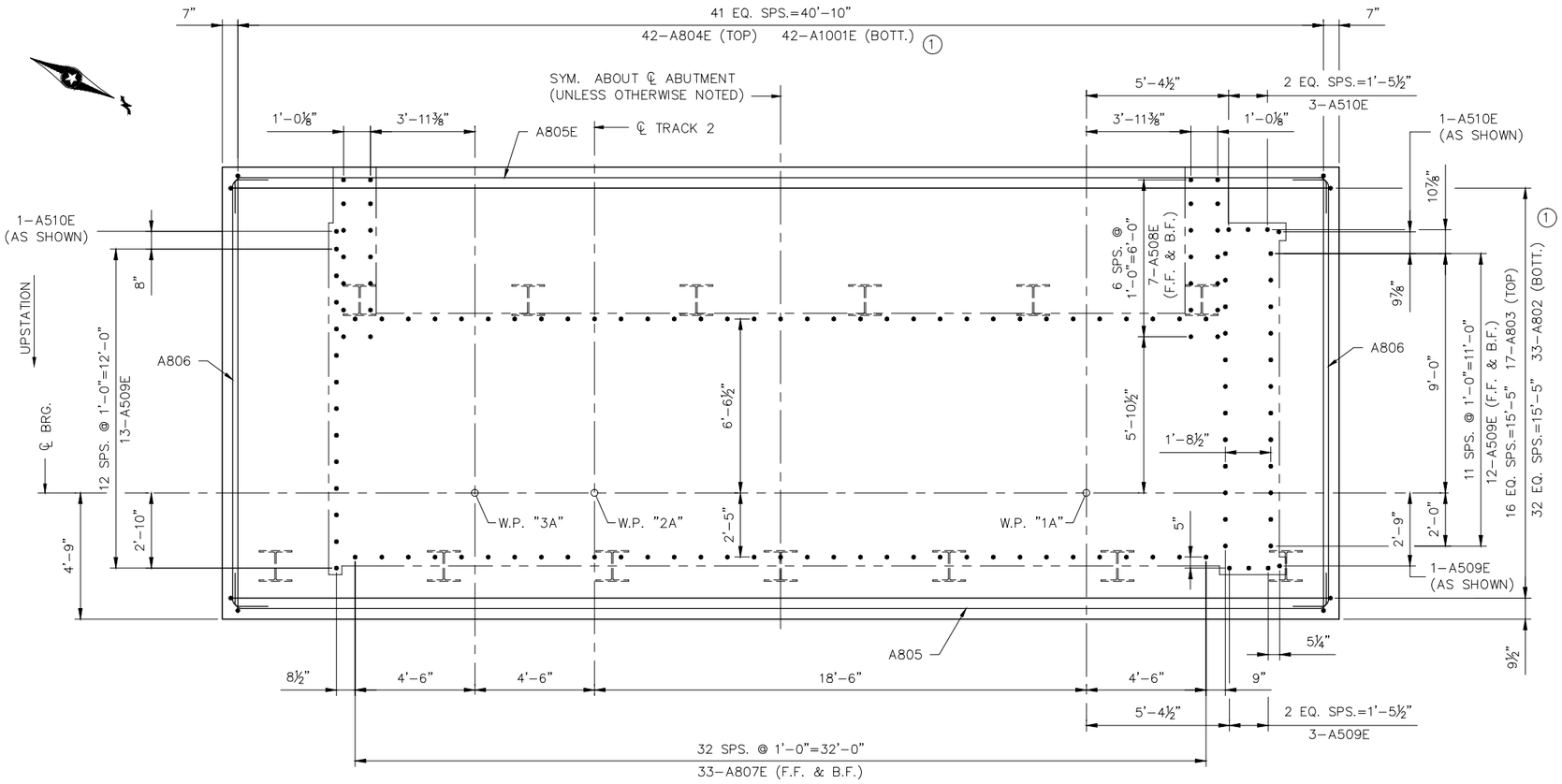

PLAN

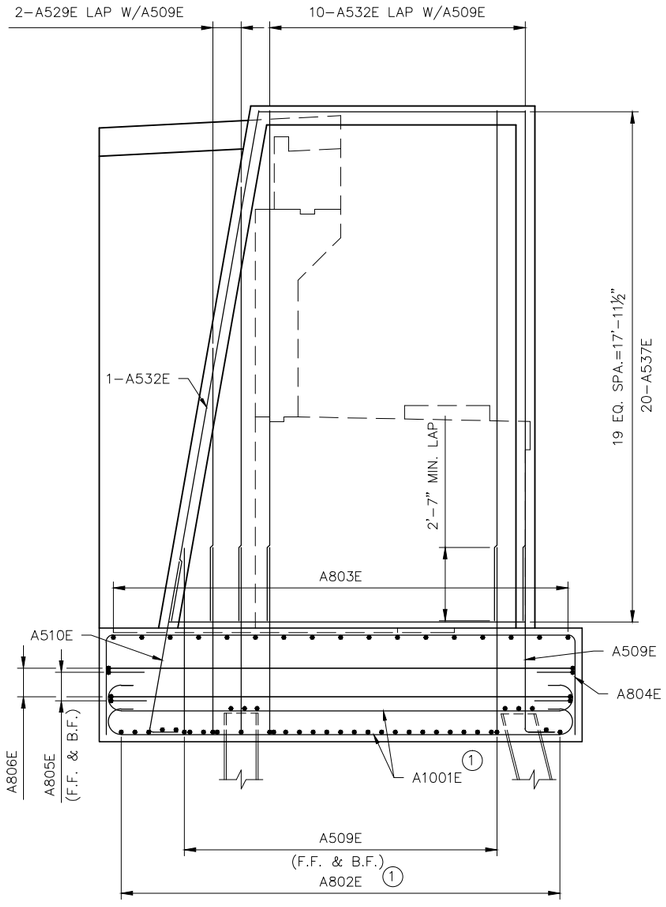

SECTION B-B

(WALL AND ABUTMENT REINFORCING NOT SHOWN FOR CLARITY)

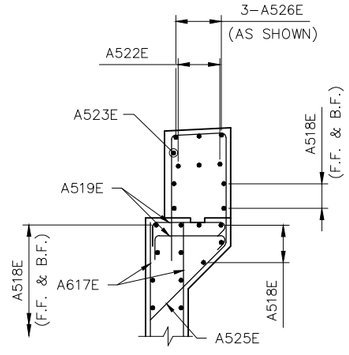

SECTION C-C

NOTES:

F.F. DENOTES FRONT FACE
B.F. DENOTES BACK FACE

① WHEN THE PLACEMENT OF THE NOTED BAR IS IMPACTED BY THE PILE, BARS SHALL BE RAISED TO CLEAR THE TOP OF PILE.

NO.	DATE	BY	CHECK	DESIGN	REVISION / SUBMITTAL

DESIGNED BY: NMP CHECKED BY: DST
DRAWN BY: JWH CHECKED BY: DST

AECOM

90% SUBMISSION - 01/22/16

METROPOLITAN COUNCIL

SOUTHWEST Green Line LRT Extension

CIVIL - VOLUME 4D
EXCELSIOR BLVD
BRIDGE 27C10
WEST ABUTMENT REINFORCEMENT 2

DISCIPLINE: STRUCTURE

SHEET NAME: CBR27C10-BRG-ABT-007

SHEET 19 OF 174

Jan, 18 2016 01:35 pm v:\3400_ADC\CAD\SEGMENT E1\PLAN SHEETS\STRUCTURES\CBR27C10\CBR27C10-BRG-ABT-006.dwg By: songers

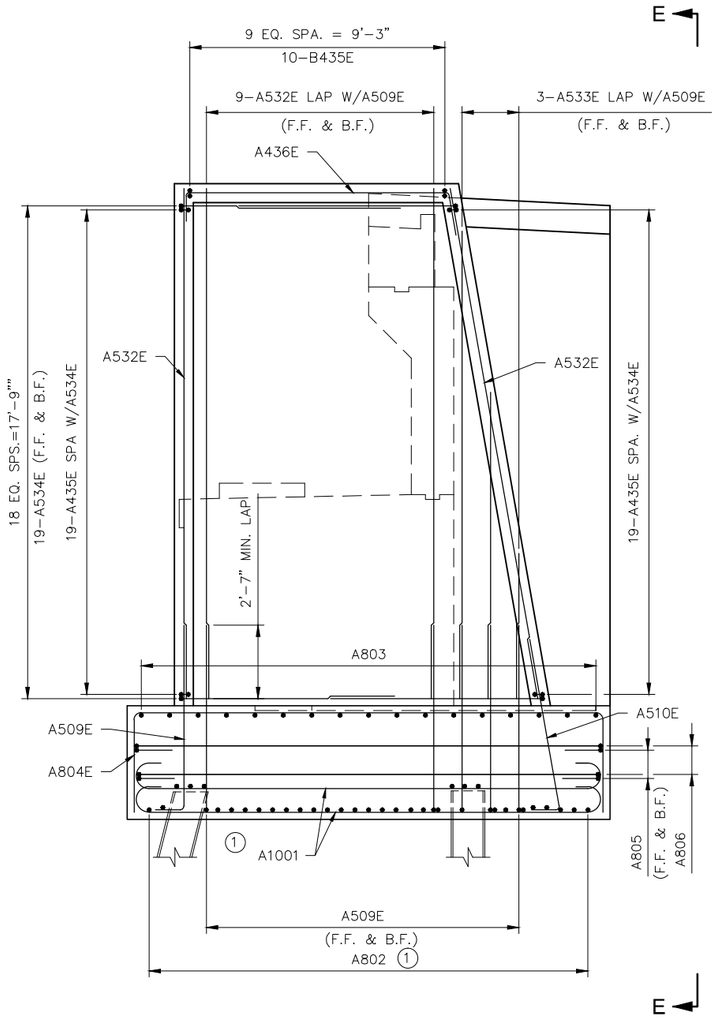

VIEW D-D

(WALL AND ABUTMENT REINFORCING NOT SHOWN FOR CLARITY)

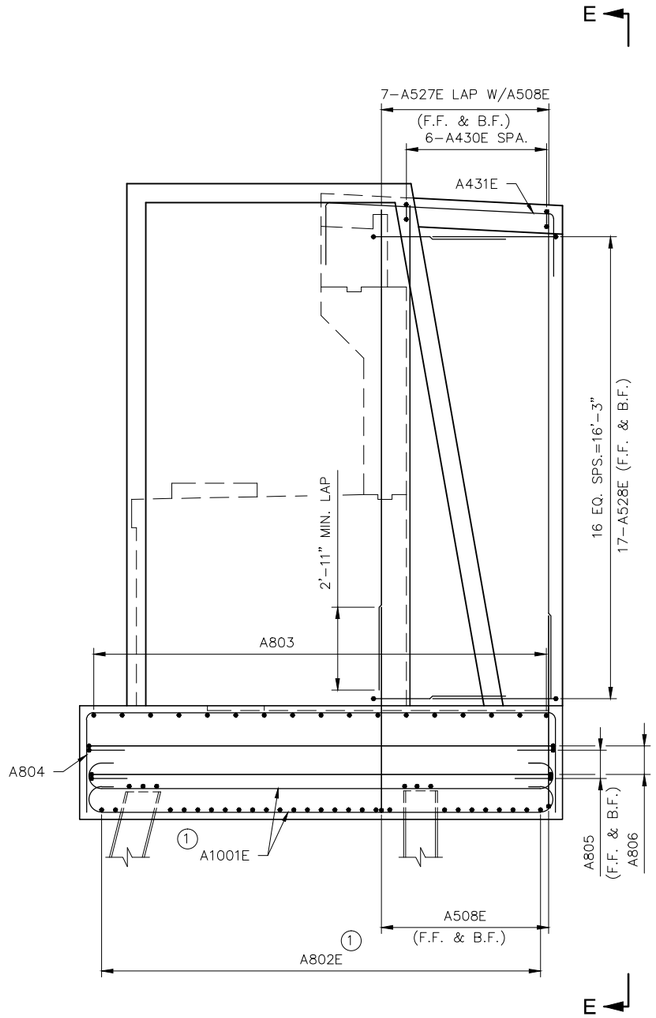

VIEW D-D

(PILASTER AND ABUTMENT REINFORCING NOT SHOWN FOR CLARITY)

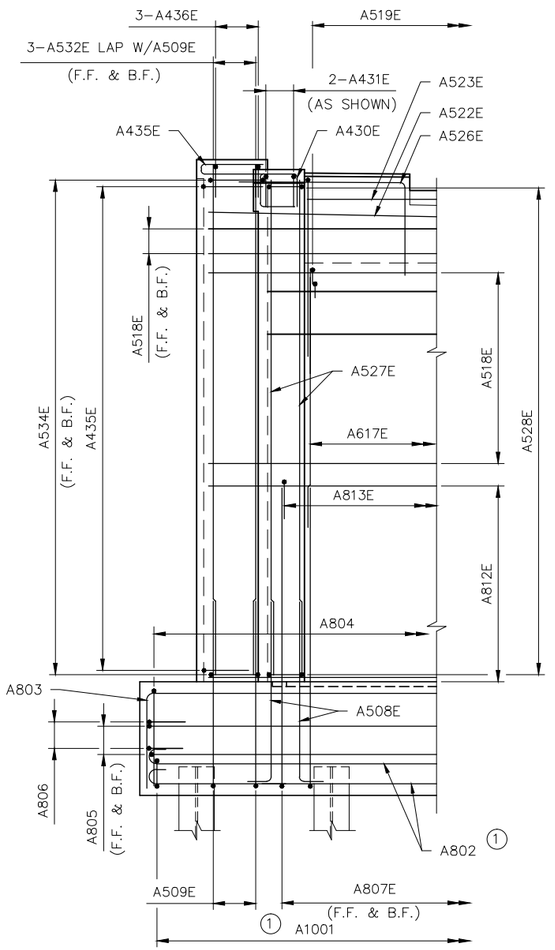

VIEW E-E

NOTES:

F.F. DENOTES FRONT FACE
B.F. DENOTES BACK FACE

1 WHEN THE PLACEMENT OF THE NOTED BAR IS IMPACTED BY THE PILE, BARS SHALL BE RAISED TO CLEAR THE TOP OF PILE.

NO.	DATE	BY	CHECK	DESIGN	REVISION / SUBMITTAL

DESIGNED BY: NMP CHECKED BY: DST
DRAWN BY: JWH CHECKED BY: DST

AECOM

90% SUBMISSION - 01/22/16

METROPOLITAN COUNCIL

SOUTHWEST Green Line LRT Extension

CIVIL - VOLUME 4D
EXCELSIOR BLVD
BRIDGE 27C10
WEST ABUTMENT REINFORCEMENT 3

DISCIPLINE: STRUCTURE

SHEET NAME: CBR27C10-BRG-ABT-008

SHEET 20 OF 174

Jan. 18 2016 01:35 pm V:\3400_ADC\CAD\SEGMENT E1\PLAN SHEETS\STRUCTURES\CBR27C10\CBR27C10-BRG-ABT-006.dwg By: songers

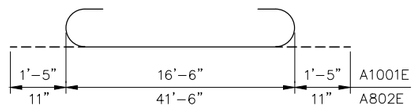

A1001 & A802

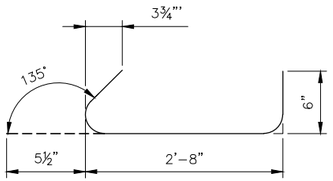

A519E

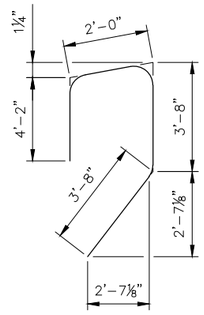

A525E

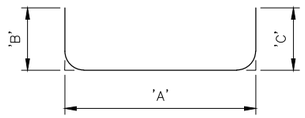

BAR	'A'	'B'	'C'
A803E	41'–6"	3'–5"	3'–5"
A804E	16'–6"	3'–6"	3'–6"
A805E	41'–4"	1'–4"	1'–4"
A806E	16'–4"	1'–4"	1'–4"
A414E	8"	1'–6"	1'–6"
A528E	1'–2"	4'–6"	4'–6"
A534E	1'–10½"	7'–9"	7'–9"
A435E	4"	1'–6"	1'–6"

A803E, A804E, A805E, A806E
A414E, A528E, A534E, A435E

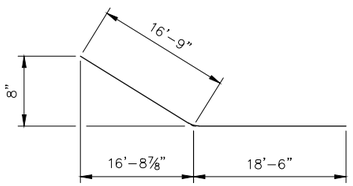

A522E

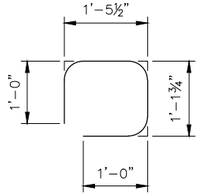

A430E

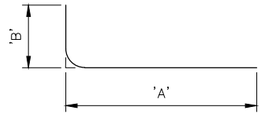

BAR	'A'	'B'
A807E	10'–10"	1'–4"
A508E	6'–9"	10"
A509E	6'–6"	10"
A526E	4'–10"	2'–4"

A807E, A508E, A509E, A526E

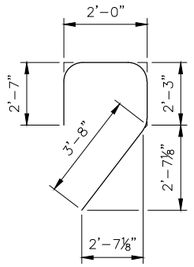

A520E

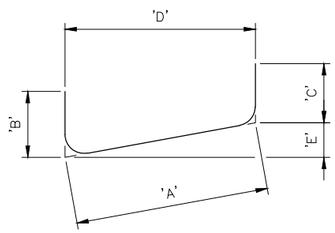

BAR	'A'	'B'	'C'	'D'	'E'
A431E	8'–1½"	2'–0"	2'–0"	8'–1⅜"	4⅞"
A813E	9'–0½"	1'–6"	1'–6"	9'–0½"	2⅛"

A431E & A813E

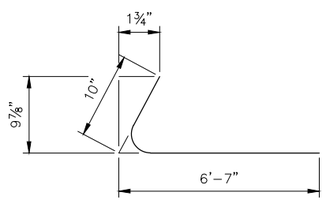

A510E

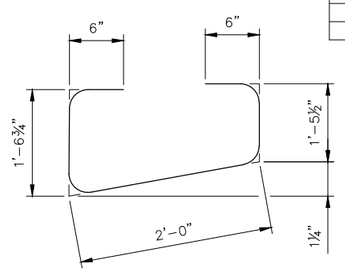

A521E

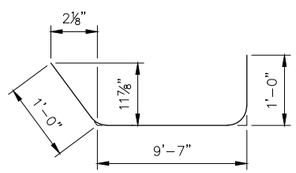

A436E

LEGEND

A 10 07 E

ABUTMENT DESIGNATION

BAR SIZE

BAR DESIGNATION

E = EPOXY
S = STAINLESS STEEL
BLANK FOR BLACK BAR

BILL OF REINFORCEMENT WEST ABUTMENT

BAR	NO.	LENGTH	SHAPE	LOCATION
A1001	42	19'–4"		FOOTING BOTTOM LONGITUDINAL
A802	33	43'–4"		FOOTING BOTTOM TRANSVERSE
A803	17	48'–4"		FOOTING TOP TRANSVERSE
A804	42	23'–6"		FOOTING TOP LONGITUDINAL
A805	4	44'–0"		FOOTING SIDE TRANSVERSE
A806	4	19'–0"		FOOTING SIDE LONGITUDINAL
A807E	66	12'–2"		STEM DOWEL
A508E	28	7'–7"		WALL DOWEL
A509E	41	7'–4"		PILASTER DOWEL
A510E	5	7'–5"		PILASTER DOWEL
A812E	24	35'–4"	STR.	HORIZONTAL STEM
A813E	33	12'–1"		TOP STEM
A414E	33	3'–8"		TOP FRONT STEM
A617E	62	8'–9"	STR.	BACKWALL VERTICAL
A518E	24	35'–4"	STR.	BACKWALL HORIZONTAL
A519E	62	3'–8"		TOP BACKWALL
A520E	23	10'–6"		TOP BACKWALL
A521E	23	6'–1"		TOP BACKWALL
A522E	3	35'–3"		TOP BACKWALL HORIZONTAL
A523E	1	35'–4"	STR.	TOP BACKWALL HORIZONTAL
A424E	23	2'–4"	STR.	TOP BACKWALL VERTICAL
A525E	8	13'–6"		TOP BACKWALL AT WALKWAY
A526E	6	7'–2"		TOP BACKWALL AT WALKWAY
A527E	28	17'–5"	STR.	VERTICAL WALL
A528E	68	10'–2"		HORIZONTAL WALL BOTTOM
A529E	2	10'–3" to 15'–11"	STR.	VERTICAL PILASTER–1 EA. LENGTH
A430E	12	4'–8"		WALL TOP
A431E	4	12'–2"		WALL TOP
A532E	35	18'–2"	STR.	VERTICAL PILASTER
A533E	6	6'–7" to 16'–11"	STR.	VERTICAL PILASTER–2 EA. LENGTH
A534E	38	17'–5"		HORIZONTAL PILASTER
A435E	48	3'–4"		HORIZONTAL PILASTER
A436E	3	11'–7"		TOP PILASTER
A537E	20	9'–8" to 12'–10"	STR.	HORIZONTAL PILASTER–1 EA. LGTH.

NO.	DATE	BY	CHECK	DESIGN	REVISION / SUBMITTAL

DESIGNED BY: NMP CHECKED BY: DST
DRAWN BY: JWH CHECKED BY: DST

AECOM

90% SUBMISSION - 01/22/16

METROPOLITAN COUNCIL

SOUTHWEST Green Line LRT Extension

CIVIL - VOLUME 4D
EXCELSIOR BLVD
BRIDGE 27C10
WEST ABUTMENT REINFORCEMENT 4

DISCIPLINE: STRUCTURE

SHEET NAME: CBR27C10-BRG-ABT-009

SHEET 21 OF 174

Jan, 18 2016 01:35 pm v:\3400_ADC\CAD\SEGMENT E1\PLAN SHEETS\STRUCTURES\CBR27C10\CBR27C10-BRG-ABT-006.dwg By: songers

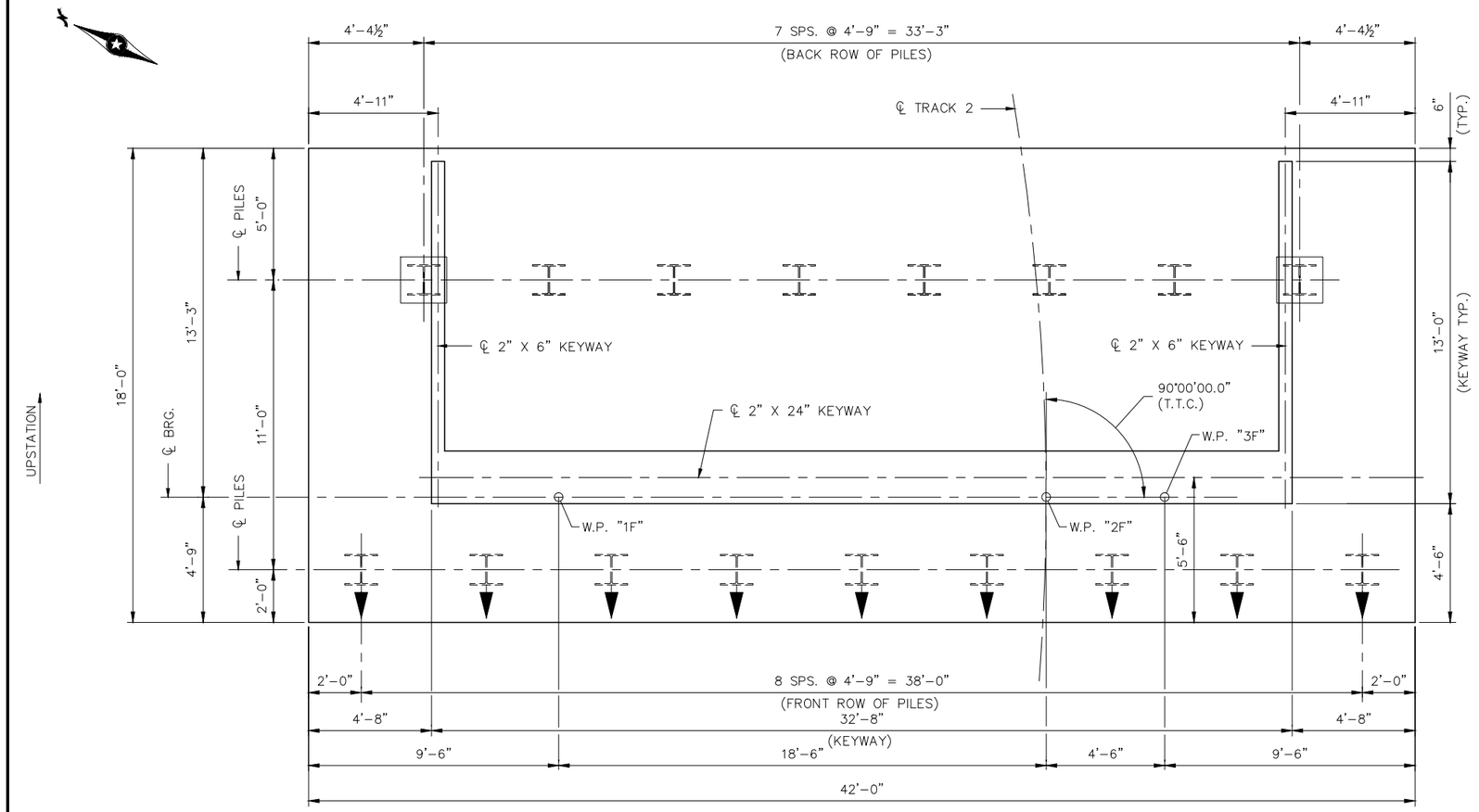

FOOTING PLAN

EAST ABUTMENT COMPUTED PILE LOAD (TONS/PILE)	
FACTORED DEAD LOAD +EARTH PRESSURE	175
FACTORED LIVE LOAD	31
FACTORED OVERTURNING	8
FACTORED DESIGN LOAD	214
LOAD COMBINATION	STRENGTH V

EAST ABUTMENT REQUIRED NOMINAL PILE BEARING RESISTANCE FOR H-PILES Rn (TONS/PILE)		
FIELD CONTROL METHOD	ϕdyn	*Rn
MnDOT PILE FORMULA 2012 (MPF12)	0.60	357
PDA	0.65	329

*Rn = (FACTORED DESIGN LOAD)/ϕdyn

NOTES:

2 – STEEL HP TEST PILES 85 FT. LONG
15 – STEEL HP PILES EST. LENGTH 85 FT.
17 – STEEL HP PILES REQ'D FOR EAST ABUTMENT

ALL PILES ARE HP14X89, ASTM A572, GRADE 50.

ALL PILES SHALL BE EQUIPPED WITH PILE TIP PROTECTION (ROCK POINTS).

PILE SPACING SHOWN IS AT BOTTOM OF FOOTING.

ALL PILES TO BE VERTICAL, UNLESS DENOTED OTHERWISE.

PILE MARKED H► TO BE BATTERED 3" PER FT. IN THE DIRECTION SHOWN.

PILE LENGTHS ARE MINIMUM UNLESS APPROVED BY THE ENGINEER.

FOR PILE SPLICE DETAILS, SEE MnDOT STANDARD DETAIL B202. WELDED SPLICES SHALL BE IN ACCORDANCE WITH CONTRACT DOCUMENTS. DRIVE FIT SPLICES WILL NOT BE ALLOWED.

☐ DENOTES TEST PILE.

NO.	DATE	BY	CHECK	DESIGN	REVISION / SUBMITTAL

DESIGNED BY: NMP CHECKED BY: DST
DRAWN BY: JWH CHECKED BY: DST

AECOM

90% SUBMISSION - 01/22/16

METROPOLITAN COUNCIL

SOUTHWEST Green Line LRT Extension

CIVIL - VOLUME 4D
EXCELSIOR BLVD
BRIDGE 27C10
EAST ABUTMENT FOOTING DETAILS

DISCIPLINE: STRUCTURE
SHEET NAME: CBR27C10-BRG-ABT-010

SHEET 22 OF 174

Jan, 18 2016 01:37 pm V:\3400_ADC\CAD\SEGMENT E1\PLAN SHEETS\STRUCTURES\CBR27C10\CBR27C10-BRG-ABT-010.dwg By: songers

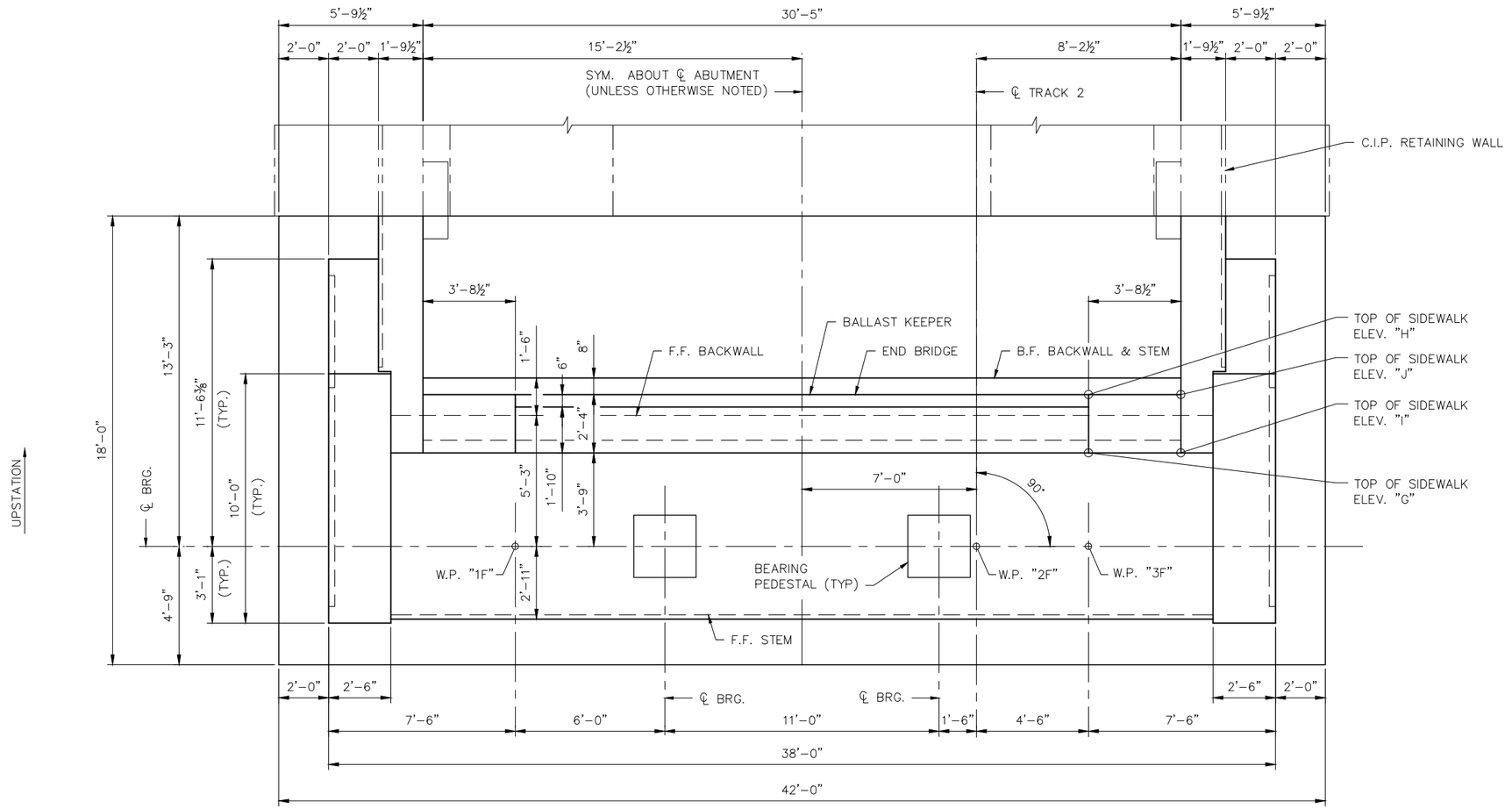

PLAN

NO.	DATE	BY	CHECK	DESIGN	REVISION / SUBMITTAL

DESIGNED BY: NMP CHECKED BY: DST
DRAWN BY: JWH CHECKED BY: DST

AECOM

90% SUBMISSION - 01/22/16

METROPOLITAN COUNCIL

SOUTHWEST Green Line LRT Extension

CIVIL - VOLUME 4D
EXCELSIOR BLVD
BRIDGE 27C10
EAST ABUTMENT DETAILS 1

DISCIPLINE: STRUCTURE
SHEET NAME: CBR27C10-BRG-ABT-011

SHEET 23 OF 174

Jan. 18 2016 01:39 pm v:\3400_ADC\CAD\SEGMENT E1\PLAN SHEETS\STRUCTURES\CBR27C10\CBR27C10-BRG-ABT-011.dwg By: songers

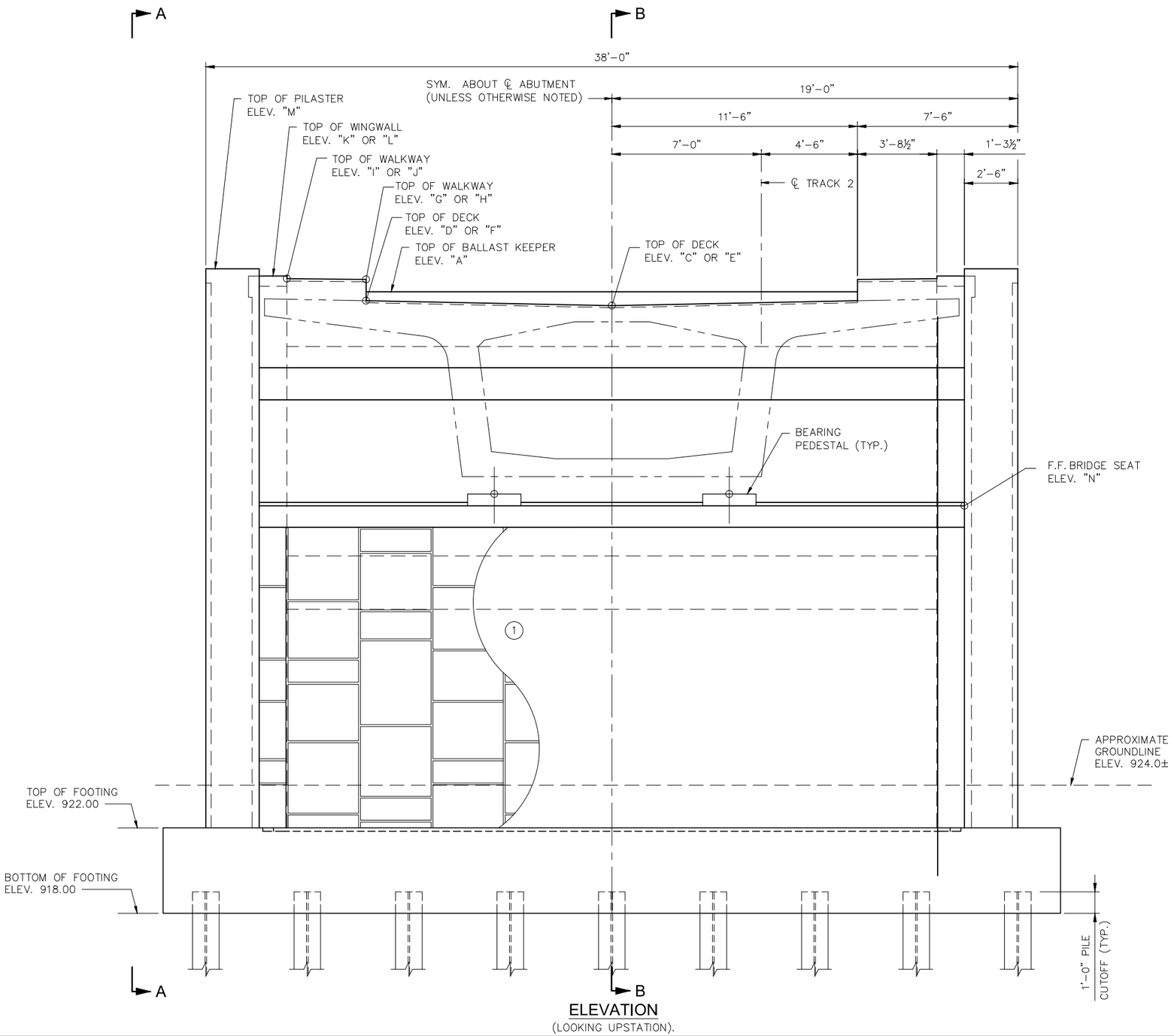

ELEVATION
(LOOKING UPSTATION).

NOTES:

1. ARCHITECTURAL CONCRETE TEXTURE (RECTANGULAR GRID) WITH ARCHITECTURAL SURFACE FINISH (SINGLE COLOR).
2. ARCHITECTURAL CONCRETE TEXTURE (LIMESTONE) WITH ARCHITECTURAL SURFACE FINISH (SINGLE COLOR).

POINT	ELEV.
"A"	947.12
"B"	944.29
"C"	946.44
"D"	946.67
"E"	946.35
"F"	946.58
"G"	947.67
"H"	947.55
"I"	947.70
"J"	947.59
"K"	947.83
"L"	947.35
"M"	948.17
"N"	937.07

NO.	DATE	BY	CHECK	DESIGN	REVISION / SUBMITTAL

DESIGNED BY: NMP CHECKED BY: DST
DRAWN BY: JWH CHECKED BY: DST

AECOM

90% SUBMISSION - 01/22/16

METROPOLITAN COUNCIL

SOUTHWEST Green Line LRT Extension

CIVIL - VOLUME 4D
EXCELSIOR BLVD
BRIDGE 27C10
EAST ABUTMENT DETAILS 2

DISCIPLINE: STRUCTURE

SHEET NAME: CBR27C10-BRG-ABT-012

SHEET 24 OF 174

Jan, 18 2016 01:39 pm v:\3400_ADC\CAD\SEGMENT E1\PLAN SHEETS\STRUCTURES\CBR27C10\CBR27C10-BRG-ABT-011.dwg By: songers

NOTES:

1. ARCHITECTURAL CONCRETE TEXTURE (RECTANGULAR GRID) WITH ARCHITECTURAL SURFACE FINISH (SINGLE COLOR).
2. ARCHITECTURAL CONCRETE TEXTURE (LIMESTONE) WITH ARCHITECTURAL SURFACE FINISH (SINGLE COLOR).

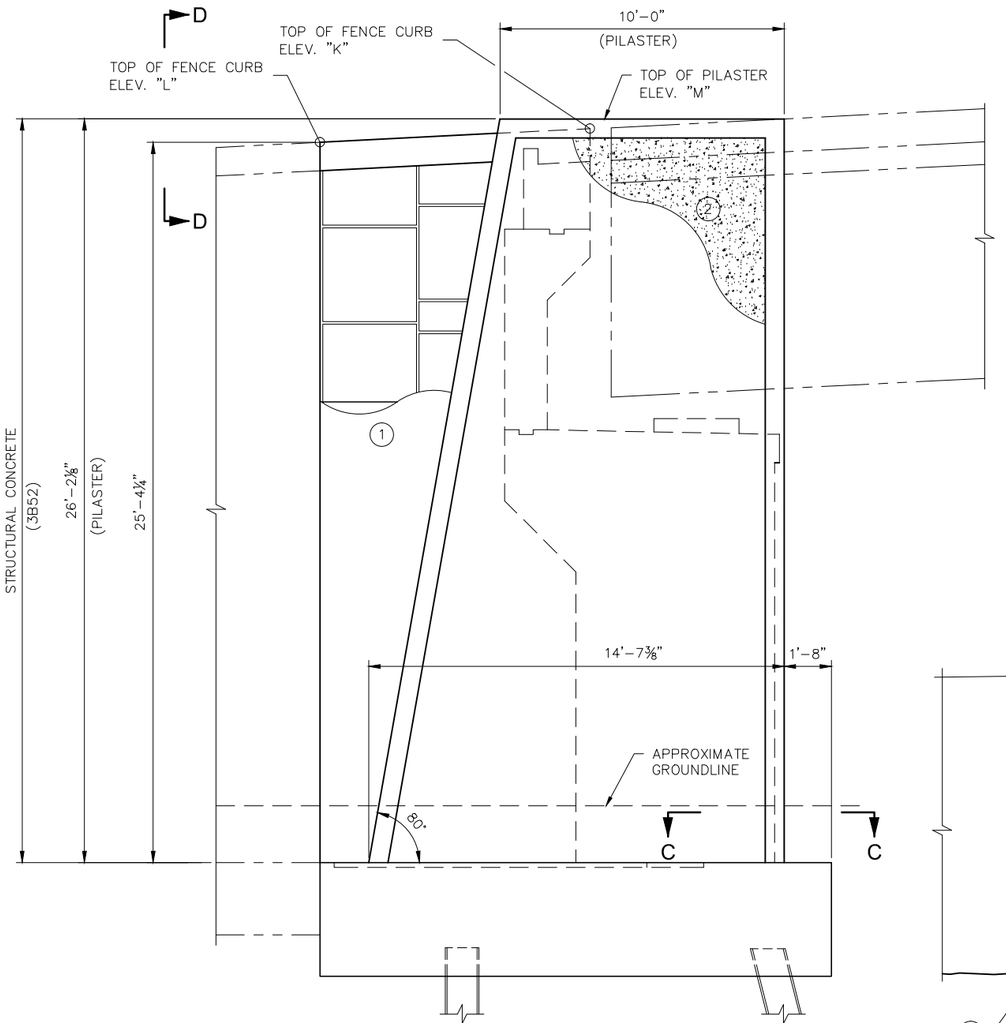

VIEW A-A

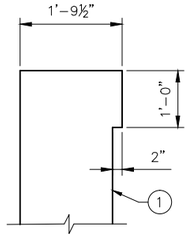

SECTION D-D

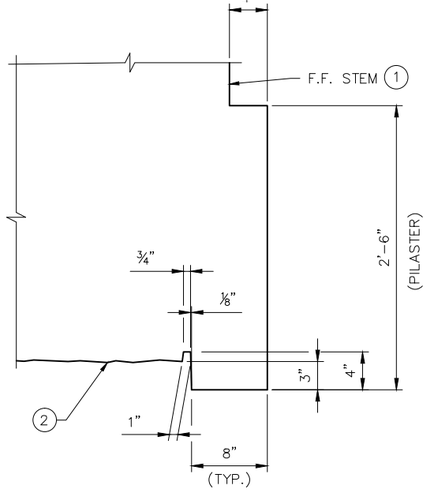

SECTION C-C

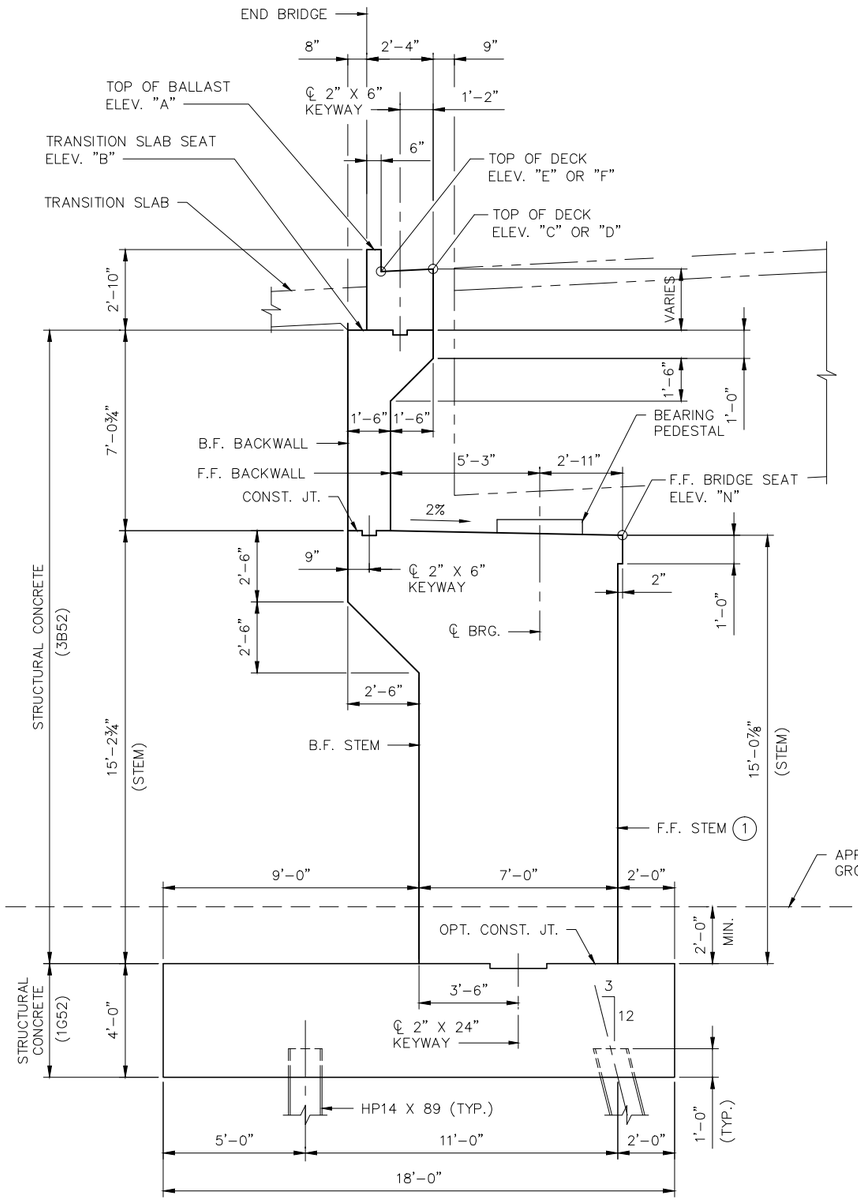

SECTION B-B

NO.	DATE	BY	CHECK	DESIGN	REVISION / SUBMITTAL

DESIGNED BY: NMP | CHECKED BY: DST
DRAWN BY: JWH | CHECKED BY: DST

AECOM

90% SUBMISSION - 01/22/16

METROPOLITAN COUNCIL

SOUTHWEST Green Line LRT Extension

CIVIL - VOLUME 4D
EXCELSIOR BLVD
BRIDGE 27C10
EAST ABUTMENT DETAILS 3

DISCIPLINE: STRUCTURE
SHEET NAME: CBR27C10-BRG-ABT-013

SHEET 25 OF 174

Jan, 18 2016 01:39 pm v:\3400_ADC\CAD\SEGMENT E1\PLAN SHEETS\STRUCTURES\CBR27C10\CBR27C10-BRG-ABT-011.dwg By: songers

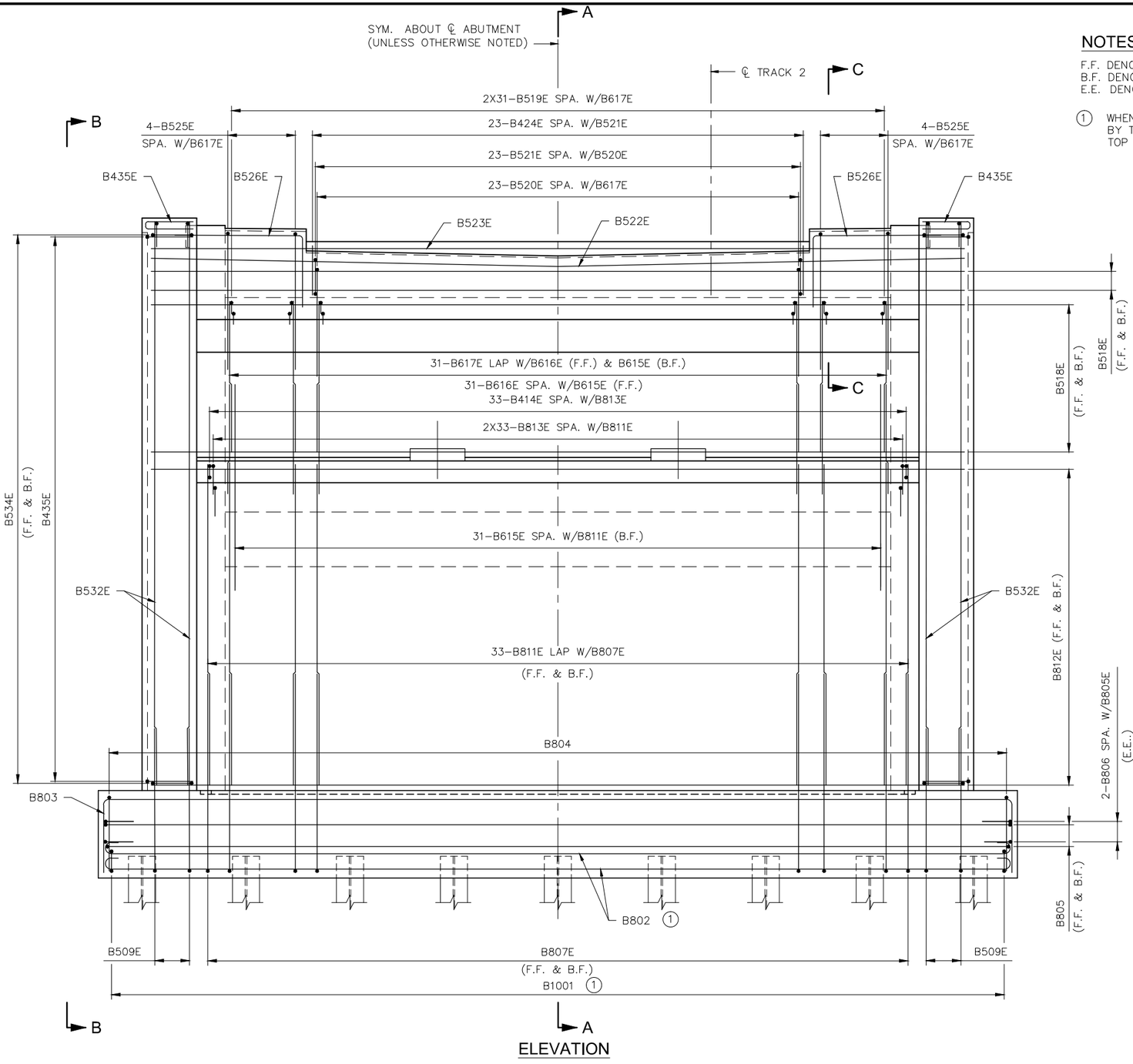

ELEVATION

NOTES:

F.F. DENOTES FRONT FACE
B.F. DENOTES BACK FACE
E.E. DENOTES EACH END

① WHEN THE PLACEMENT OF THE NOTED BAR IS IMPACTED BY THE PILE, BARS SHALL BE RAISED TO CLEAR THE TOP OF PILE.

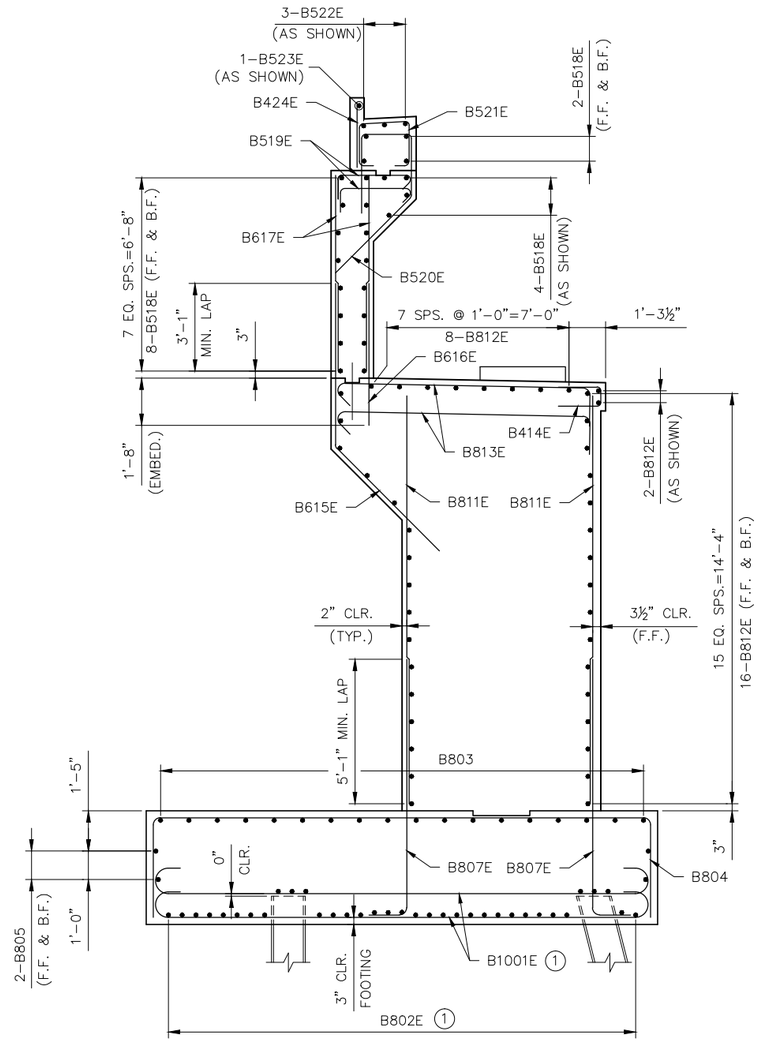

SECTION A-A

NO.	DATE	BY	CHECK	DESIGN	REVISION / SUBMITTAL

DESIGNED BY: NMP CHECKED BY: DST
DRAWN BY: JWH CHECKED BY: DST

AECOM

90% SUBMISSION - 01/22/16

METROPOLITAN COUNCIL

SOUTHWEST Green Line LRT Extension

CIVIL - VOLUME 4D
EXCELSIOR BLVD
BRIDGE 27C10
EAST ABUTMENT REINFORCEMENT 1

DISCIPLINE: STRUCTURE
SHEET NAME: CBR27C10-BRG-ABT-014

SHEET 26 OF 174

Jan, 18 2016 01:41 pm v:\3400_ADC\CAD\SEGMENT E1\PLAN SHEETS\STRUCTURES\CBR27C10\CBR27C10-BRG-ABT-014.dwg By: songers

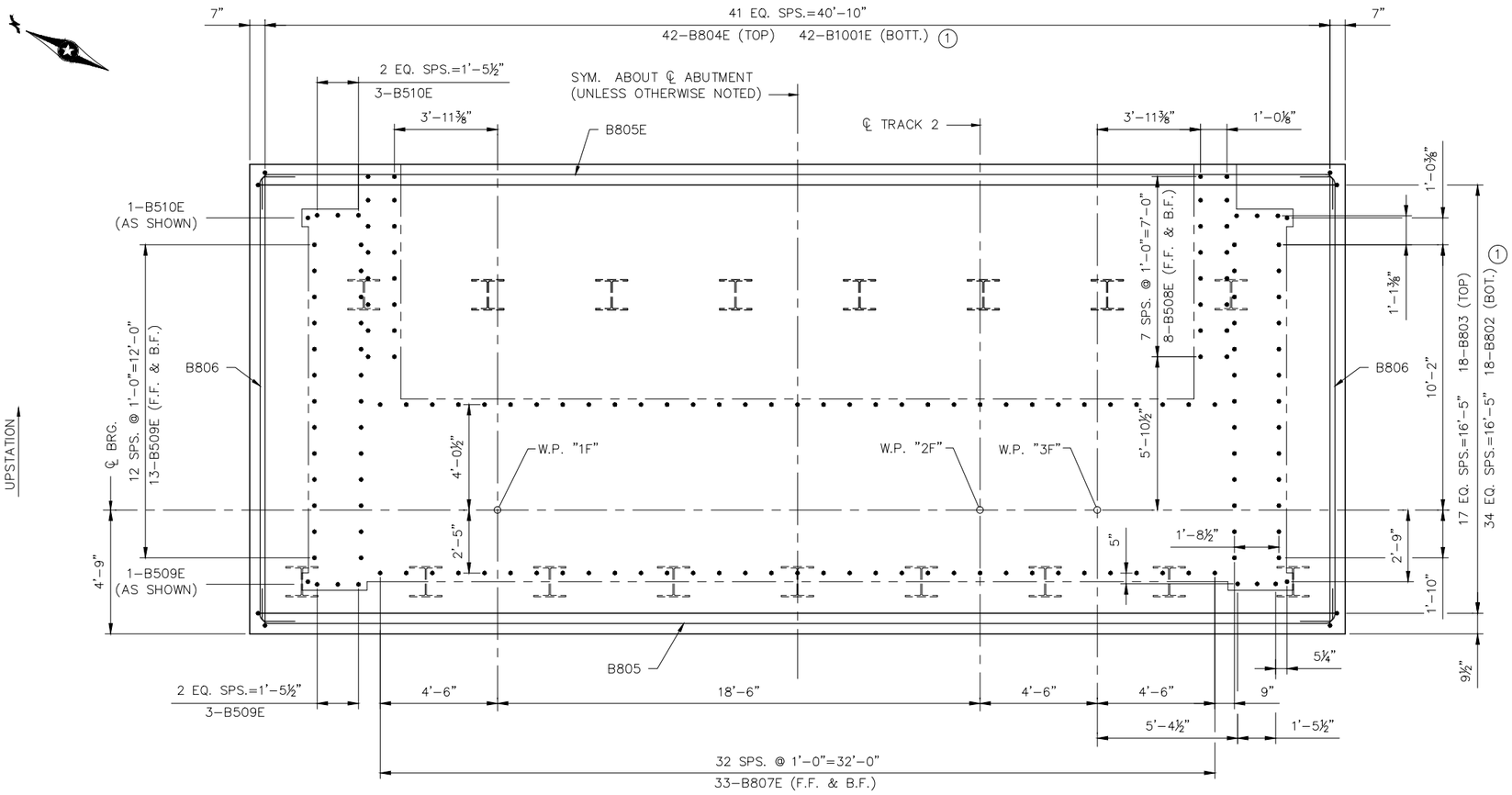

PLAN

NOTES:

F.F. DENOTES FRONT FACE
B.F. DENOTES BACK FACE

(1) WHEN THE PLACEMENT OF THE NOTED BAR IS IMPACTED BY THE PILE, BARS SHALL BE RAISED TO CLEAR THE TOP OF PILE.

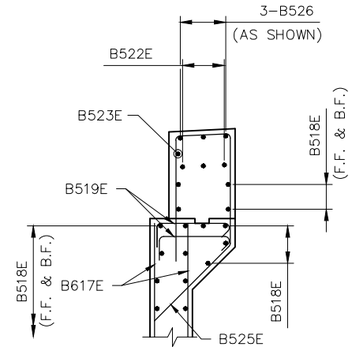

SECTION C-C

NO.	DATE	BY	CHECK	DESIGN	REVISION / SUBMITTAL

DESIGNED BY: NMP CHECKED BY: DST
DRAWN BY: JWH CHECKED BY: DST

AECOM

90% SUBMISSION - 01/22/16

METROPOLITAN COUNCIL

SOUTHWEST Green Line LRT Extension

CIVIL - VOLUME 4D
EXCELSIOR BLVD
BRIDGE 27C10
EAST ABUTMENT REINFORCEMENT 2

DISCIPLINE: STRUCTURE
SHEET NAME: CBR27C10-BRG-ABT-015

SHEET 27 OF 174

Jan, 18 2016 01:41 pm V:\3400_ADC\CAD\SEGMENT E1\PLAN SHEETS\STRUCTURES\CBR27C10\CBR27C10-BRG-ABT-014.dwg By: songers

NOTES:

F.F. DENOTES FRONT FACE
B.F. DENOTES BACK FACE

① WHEN THE PLACEMENT OF THE NOTED BAR IS IMPACTED BY THE PILE, BARS SHALL BE RAISED TO CLEAR THE TOP OF PILE.

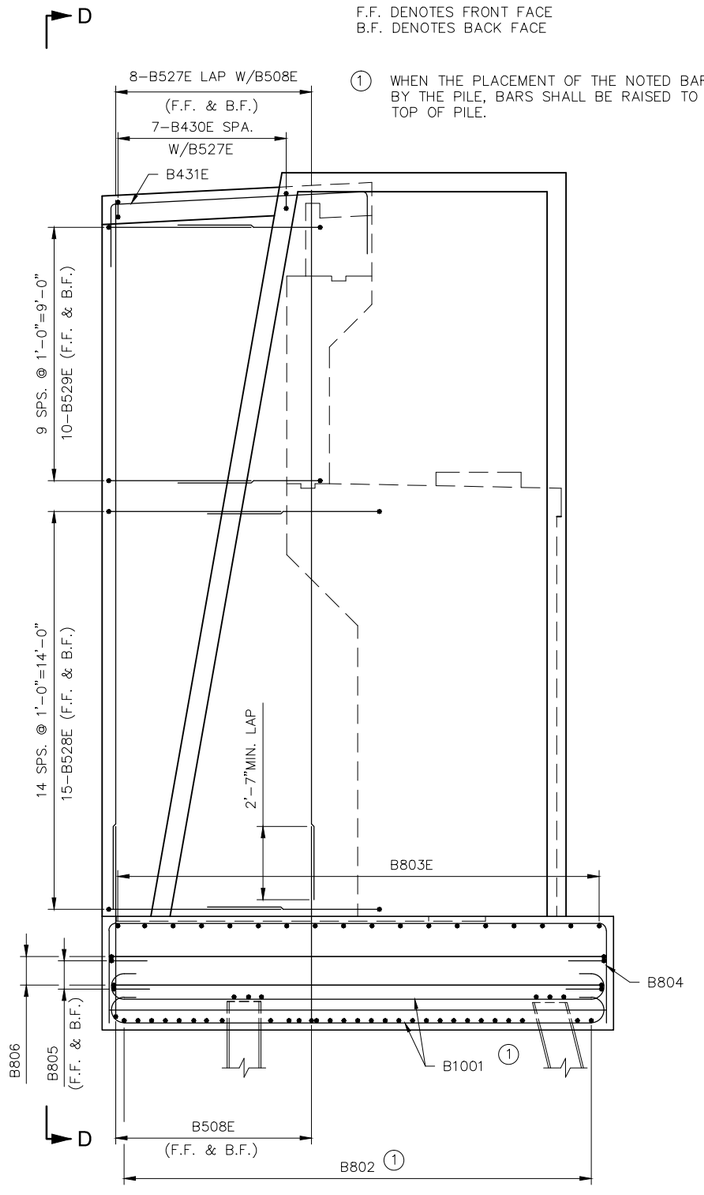

VIEW B-B
(PILASTER AND ABUTMENT REINFORCING NOT SHOWN FOR CLARITY)

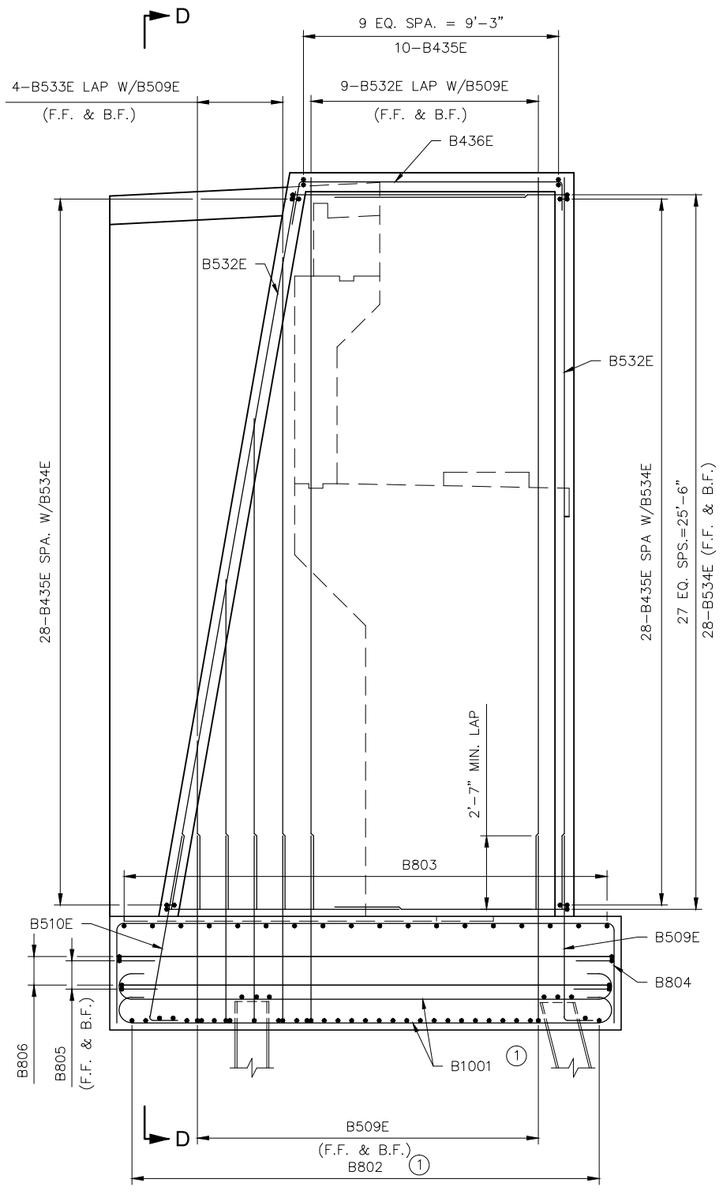

VIEW B-B
(WALL AND ABUTMENT REINFORCING NOT SHOWN FOR CLARITY)

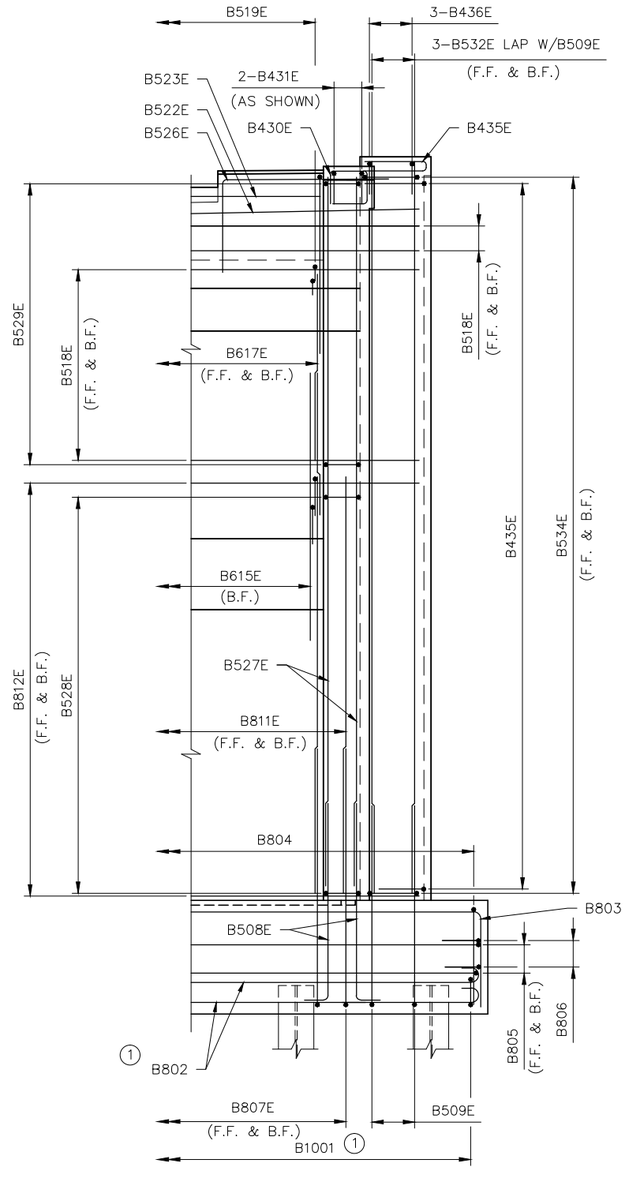

VIEW D-D

NO.	DATE	BY	CHECK	DESIGN	REVISION / SUBMITTAL

DESIGNED BY: NMP CHECKED BY: DST
DRAWN BY: JWH CHECKED BY: DST

AECOM

90% SUBMISSION - 01/22/16

METROPOLITAN COUNCIL
SOUTHWEST Green Line LRT Extension

CIVIL - VOLUME 4D
EXCELSIOR BLVD
BRIDGE 27C10
EAST ABUTMENT REINFORCEMENT 3

DISCIPLINE: STRUCTURE
SHEET NAME: CBR27C10-BRG-ABT-016

SHEET 28 OF 174

Jan, 18 2016 01:42 pm v:\3400_ADC\CAD\SEGMENT E1\PLAN SHEETS\STRUCTURES\CBR27C10\CBR27C10-BRG-ABT-014.dwg By: songers

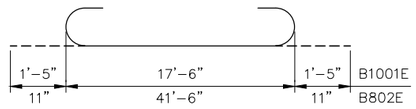

B1001 & B802

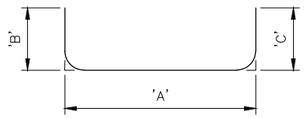

BAR	'A'	'B'	'C'
B803E	41'–6"	3'–5"	3'–5"
B804E	17'–6"	3'–6"	3'–6"
B805E	41'–4"	1'–4"	1'–4"
B806E	17'–4"	1'–4"	1'–4"
B414E	8"	1'–6"	1'–6"
B528E	1'–2"	6'–0"	6'–0"
B529E	1'–2"	5'–1"	5'–1"
B534E	1'–10½"	8'–5"	8'–5"
B435E	4"	1'–6"	1'–6"

B803E, B804E, B805E, B806E
B414E, B528E, B529E, B534E, B435E

BAR	'A'	'B'
B807E	9'–0"	1'–4"
B508E	6'–9"	10"
B509E	6'–6"	10"
B526E	6'–10"	2'–4"

B807E, B508E, B509E, B526E

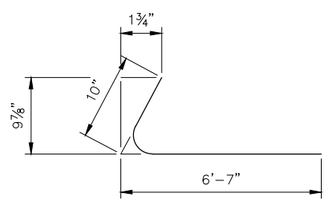

B510E

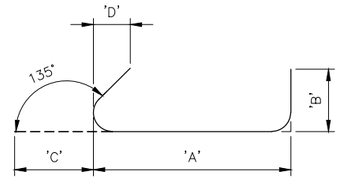

BAR	'A'	'B'	'C'	'D'
B813E	9'–0"	1'–4"	10½"	6"
B519E	2'–8"	6"	5½"	3¾"

B813E & B519E

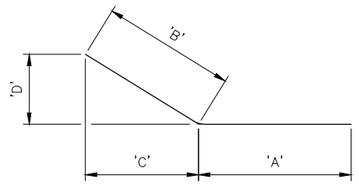

BAR	'A'	'B'	'C'	'D'
B615E	5'–2"	5'–9"	4'–0⅞"	18'–5⅞"
B522E	18'–6"	18'–6"	18'–5⅞"	8⅞"

B615E & B522E

B520E

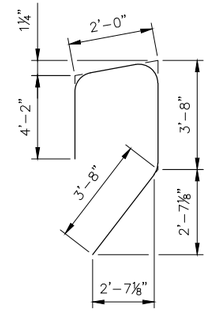

B525E

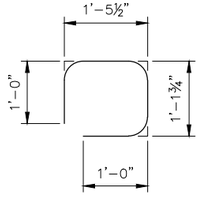

B430E

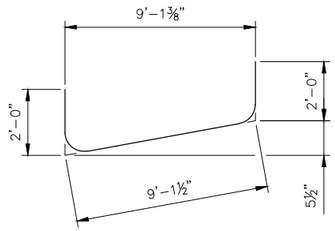

B431E

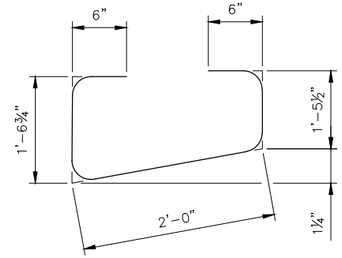

B521E

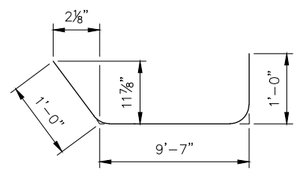

B436E

BILL OF REINFORCEMENT EAST ABUTMENT

BAR	NO.	LENGTH	SHAPE	LOCATION
B1001	42	20'–4"		FOOTING BOTTOM LONGITUDINAL
B802	35	43'–4"		FOOTING BOTTOM TRANSVERSE
B803	18	48'–4"		FOOTING TOP TRANSVERSE
B804	42	24'–6"		FOOTING TOP LONGITUDINAL
B805	4	44'–0"		FOOTING SIDE TRANSVERSE
B806	4	20'–0"		FOOTING SIDE LONGITUDINAL
B807E	66	10'–4"		STEM DOWEL
B508E	32	7'–7"		WALL DOWEL
B509E	60	7'–4"		PILASTER DOWEL
B510E	8	7'–5"		PILASTER DOWEL
B811E	66	14'–9"	STR.	VERTICAL STEM
B812E	42	37'–0"	STR.	HORIZONTAL STEM
B813E	66	11'–3"		TOP STEM
B414E	33	3'–8"		TOP FRONT STEM
B615E	31	10'–11"		TOP BACK STEM
B616E	31	5'–0"	STR.	BACKWALL / STEM DOWEL
B617E	62	7'–1"	STR.	BACKWALL VERTICAL
B518E	24	37'–0"	STR.	BACKWALL HORIZONTAL
B519E	62	3'–8"		TOP BACKWALL
B520E	23	10'–6"		TOP BACKWALL
B521E	23	6'–1"		TOP BACKWALL
B522E	3	37'–0"		TOP BACKWALL HORIZONTAL
B523E	1	37'–0"	STR.	TOP BACKWALL HORIZONTAL
B424E	23	2'–4"	STR.	TOP BACKWALL VERTICAL
B525E	8	13'–6"		TOP BACKWALL AT WALKWAY
B526E	6	9'–2"		TOP BACKWALL AT WALKWAY
B527E	32	25'–2"	STR.	VERTICAL WALL
B528E	60	13'–2"		HORIZONTAL WALL BOTTOM
B529E	40	11'–4"		HORIZONTAL WALL TOP
B430E	14	4'–8"		WALL TOP
B431E	4	13'–2"		WALL TOP
B532E	48	26'–0"	STR.	VERTICAL PILASTER
B533E	16	7'–3" to 23'–6"	STR.	VERTICAL PILASTER–4 EA. LENGTH
B534E	112	18'–9"		HORIZONTAL PILASTER
B435E	132	3'–4"		HORIZONTAL PILASTER
B436E	6	11'–7"		TOP PILASTER

LEGEND

B 10 07 E

- B — ABUTMENT DESIGNATION
- 10 — BAR SIZE
- 07 — BAR DESIGNATION
- E — E = EPOXY; S = STAINLESS STEEL; BLANK FOR BLACK BAR

NO.	DATE	BY	CHECK	DESIGN	REVISION / SUBMITTAL

DESIGNED BY: NMP | CHECKED BY: DST
DRAWN BY: JWH | CHECKED BY: DST

AECOM

90% SUBMISSION - 01/22/16

METROPOLITAN COUNCIL

SOUTHWEST Green Line LRT Extension

CIVIL - VOLUME 4D
EXCELSIOR BLVD
BRIDGE 27C10
EAST ABUMENT REINFORCEMENT 4

DISCIPLINE: STRUCTURE

SHEET NAME: CBR27C10-BRG-ABT-017

SHEET 29 OF 174

Jan. 18 2016 01:42 pm V:\3400_ADC\CAD\SEGMENT E1\PLAN SHEETS\STRUCTURES\CBR27C10\CBR27C10-BRG-ABT-014.dwg By: songers

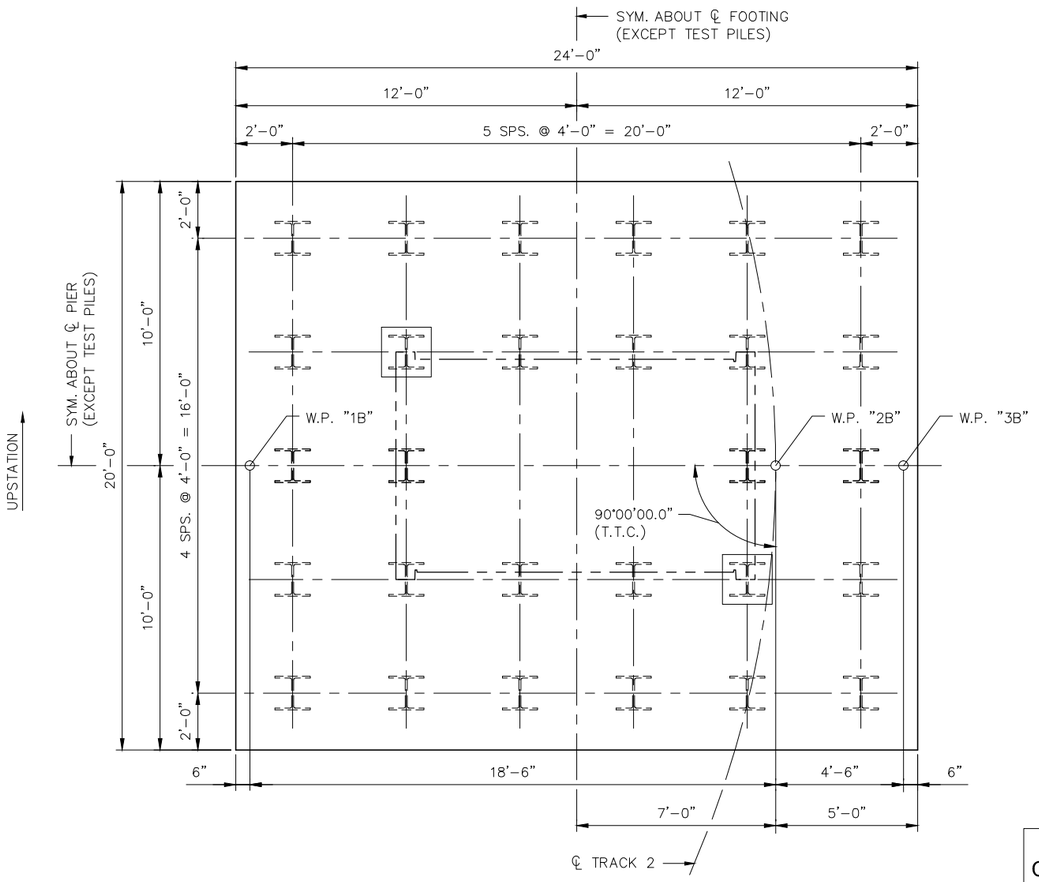

FOOTING PLAN

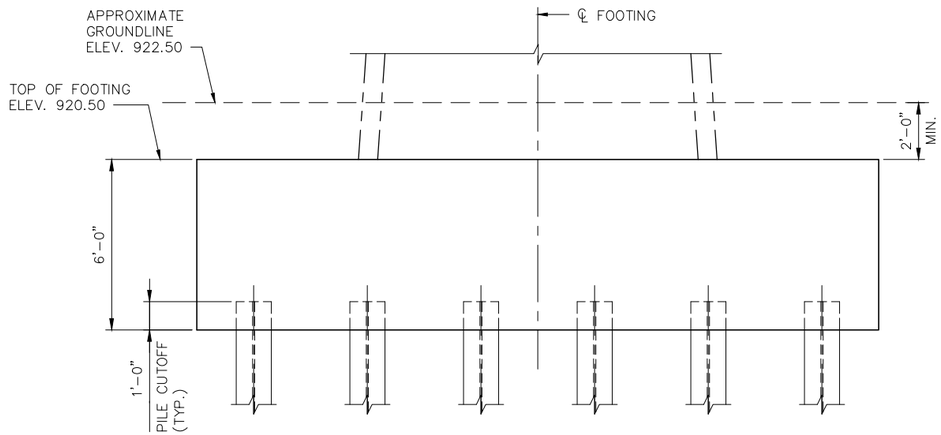

FOOTING ELEVATION

PIER 1 COMPUTED PILE LOAD (TONS/PILE)	
FACTORED DEAD LOAD	143
FACTORED LIVE LOAD	24
FACTORED OVERTURNING	32
FACTORED DESIGN LOAD	199
FACTORED DESIGN UPLIFT	--
LOAD COMBINATION	STRENGTH V

PIER 1 REQUIRED NOMINAL PILE BEARING RESISTANCE FOR H-PILES Rn (TONS/PILE)		
FIELD CONTROL METHOD	ϕdyn	*Rn
MnDOT PILE FORMULA 2012 (MPF12)	0.60	332
PDA	0.65	306

*Rn = (FACTORED DESIGN LOAD)/ϕdyn

NOTES:

2 – STEEL HP TEST PILES 100 FT. LONG
26 – STEEL HP PILES EST. LENGTH 100 FT.
28 – STEEL HP PILES REQ'D FOR PIER 1

ALL PILES ARE HP14X117, ASTM A572, GRADE 50.

ALL PILES SHALL BE EQUIPPED WITH PILE TIP PROTECTION (ROCK POINTS).

PILE SPACING SHOWN IS AT BOTTOM OF FOOTING.

ALL PILES SHALL BE DRIVEN VERTICAL.

PILE LENGTHS ARE MINIMUM UNLESS APPROVED BY THE ENGINEER.

FOR PILE SPLICE DETAILS, SEE MnDOT STANDARD DETAIL B202. WELDED SPLICES SHALL BE IN ACCORDANCE WITH CONTRACT DOCUMENTS. DRIVE FIT SPLICES WILL NOT BE ALLOWED.

☐ DENOTES TEST PILES.

NO.	DATE	BY	CHECK	DESIGN	REVISION / SUBMITTAL

DESIGNED BY: NMP CHECKED BY: DST
DRAWN BY: SGS CHECKED BY: DST

AECOM

90% SUBMISSION - 01/22/16

METROPOLITAN COUNCIL

SOUTHWEST Green Line LRT Extension

CIVIL - VOLUME 4D
EXCELSIOR BLVD
BRIDGE 27C10
PIER 1 FOOTING DETAILS

DISCIPLINE: STRUCTURE
SHEET NAME: CBR27C10-BRG-PIR-001

SHEET 30 OF 174

Jan, 18 2016 11:57 am V:\3400_ADC\CAD\SEGMENT E1\PLAN SHEETS\STRUCTURES\CBR27C10\CBR27C10-BRG-PIR-001.dwg By: hodges

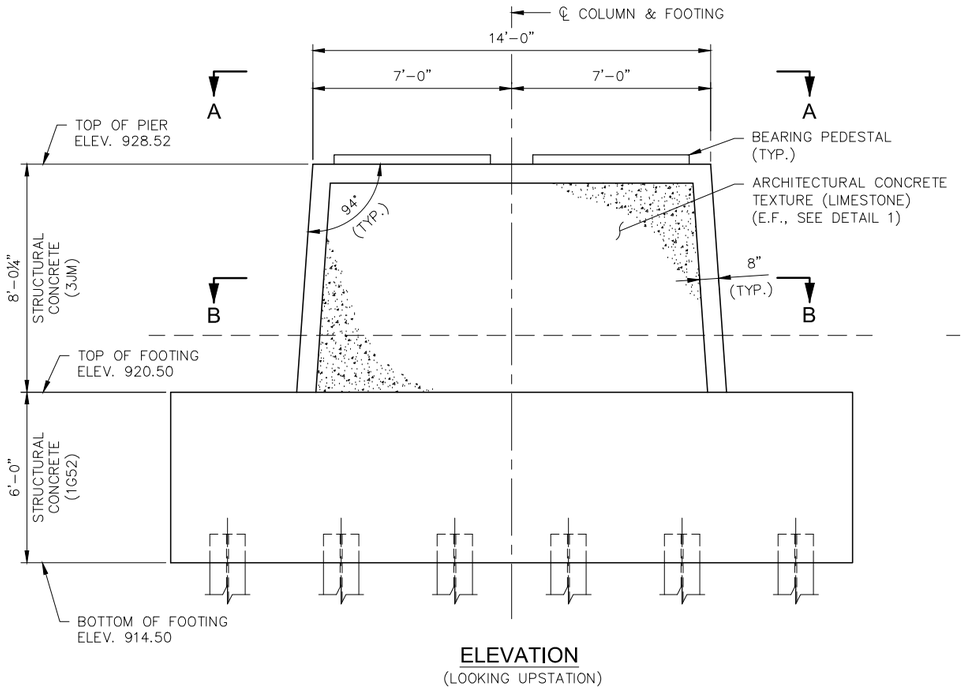

ELEVATION
(LOOKING UPSTATION)

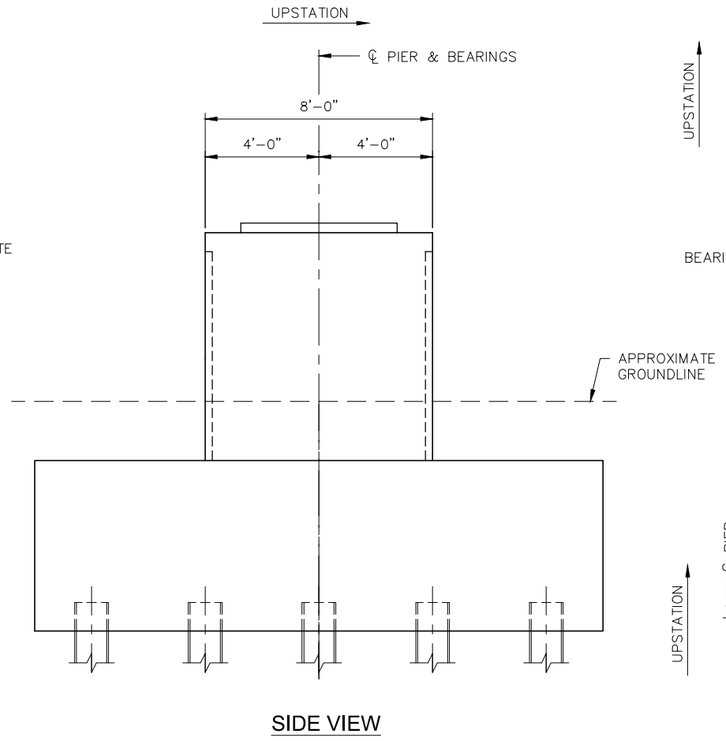

SIDE VIEW

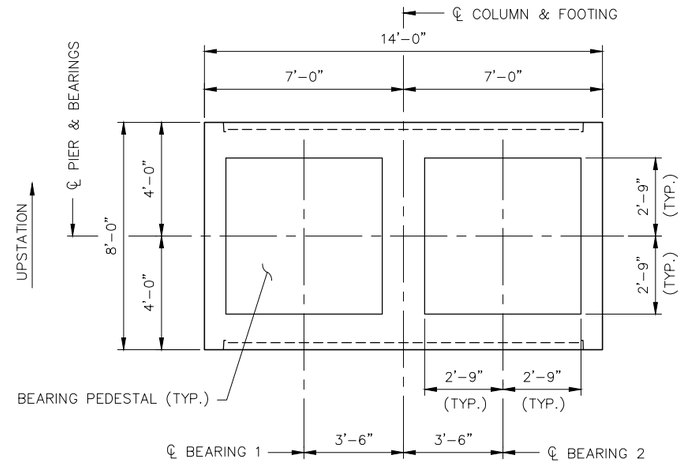

VIEW A-A

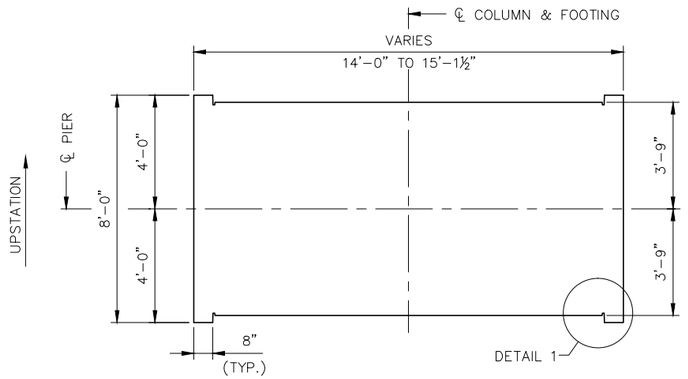

SECTION B-B

NOTES:

FINAL CONSTRUCTION ELEVATIONS FOR TOP OF PIER AND TOP OF BEARING PEDESTALS SHALL BE DETERMINED BY THE CONTRACTOR BASED ON THE ACTUAL HEIGHT OF THE BEARING ASSEMBLIES FURNISHED. FINAL ELEVATIONS SHALL BE REVIEWED AND APPROVED BY THE ENGINEER PRIOR TO STARTING WORK. ANY REQUIRED ADJUSTMENT OF THE TOP OF PIER ELEVATION SHALL BE MADE AT NO ADDITIONAL COST TO THE OWNER.

BEARING PEDESTALS SHALL HAVE A MINIMUM HEIGHT OF 3".

BEARING PEDESTALS SHALL BE STRUCTURAL CONCRETE (3JM).

FOR FOOTING DETAILS, SEE "PIER 1 FOOTING DETAILS" SHEET.

FOR BEARING DETAILS, SEE "BEARING DETAILS 1 & 2" SHEETS.

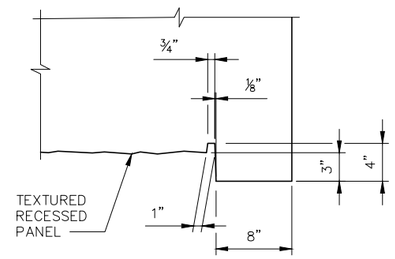

DETAIL 1

NO.	DATE	BY	CHECK	DESIGN	REVISION / SUBMITTAL

DESIGNED BY: NMP | CHECKED BY: DST
DRAWN BY: SGS | CHECKED BY: DST

AECOM

90% SUBMISSION - 01/22/16

METROPOLITAN COUNCIL

SOUTHWEST Green Line LRT Extension

CIVIL - VOLUME 4D
EXCELSIOR BLVD
BRIDGE 27C10
PIER 1 DETAILS

DISCIPLINE: STRUCTURE
SHEET NAME: CBR27C10-BRG-PIR-002

SHEET 31 OF 174

Jan, 18 2016 12:00 pm V:\3400_ADC\CAD\SEGMENT E1\PLAN SHEETS\STRUCTURES\CBR27C10\CBR27C10-BRG-PIR-002.dwg By: hodgesj

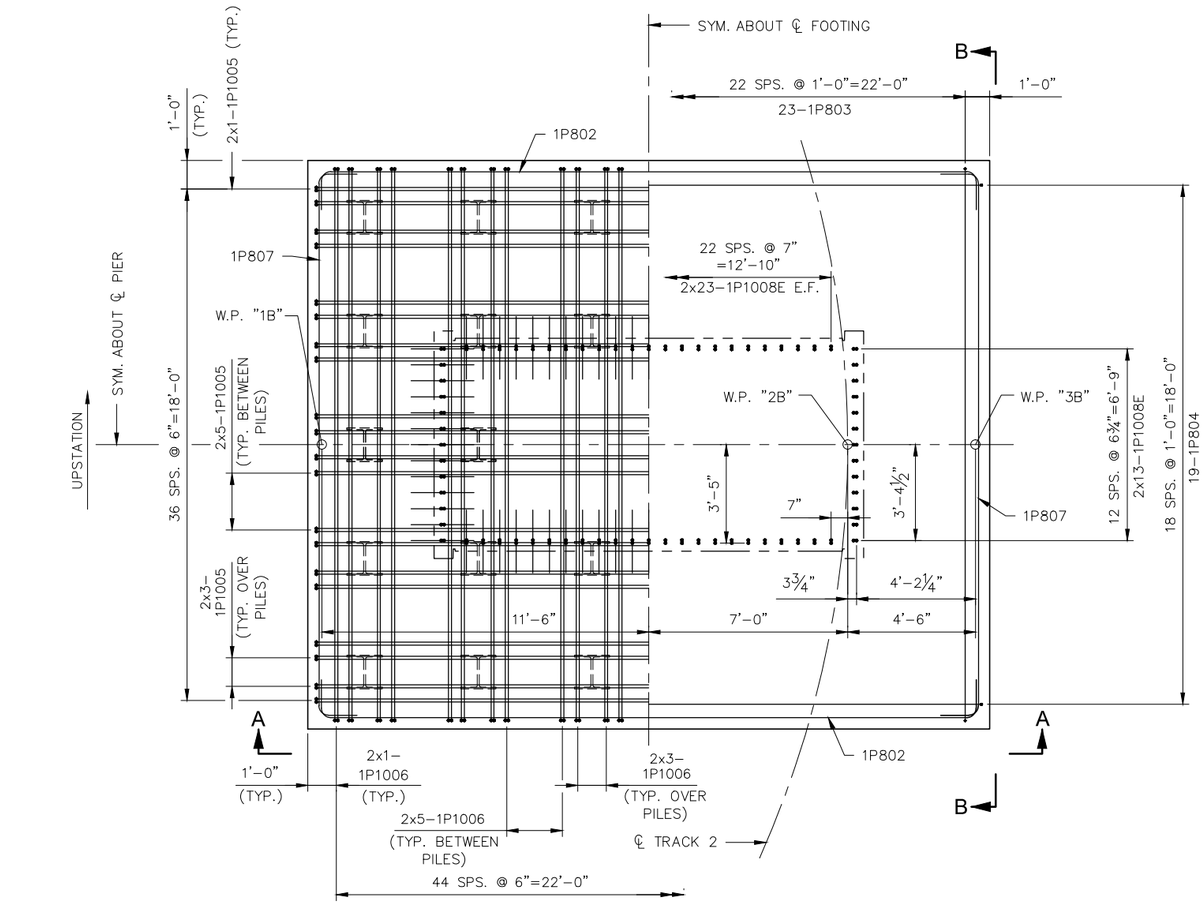

HALF-PLAN BOTTOM

HALF-PLAN TOP

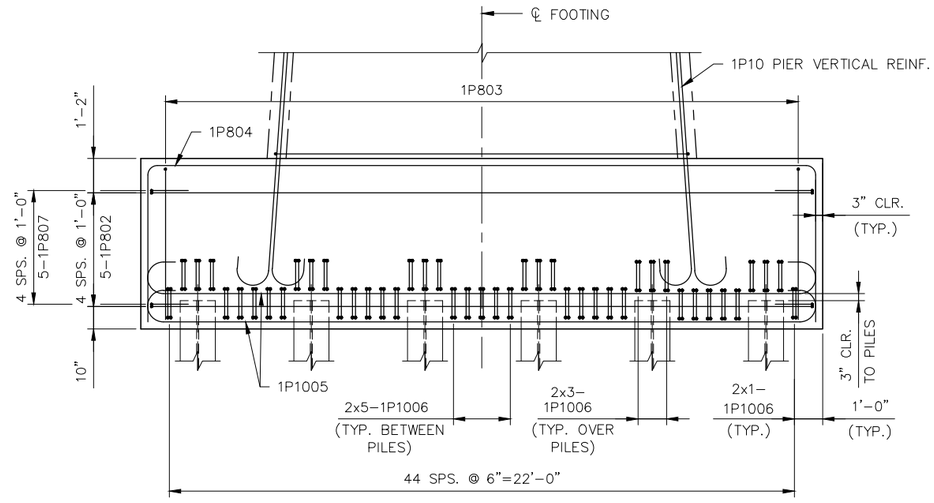

VIEW A-A

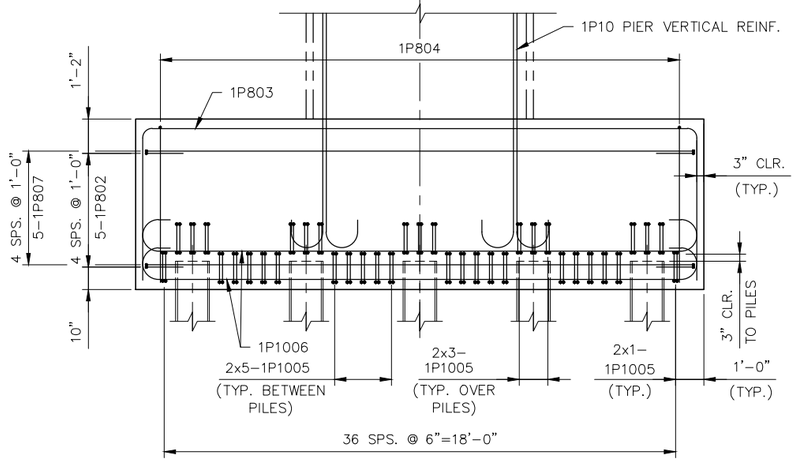

VIEW B-B

NO.	DATE	BY	CHECK	DESIGN	REVISION / SUBMITTAL

DESIGNED BY: NMP | CHECKED BY: DST
DRAWN BY: SGS | CHECKED BY: DST

AECOM

90% SUBMISSION - 01/22/16

METROPOLITAN COUNCIL

SOUTHWEST Green Line LRT Extension

CIVIL - VOLUME 4D
EXCELSIOR BLVD
BRIDGE 27C10
PIER 1 REINFORCEMENT 1

DISCIPLINE: STRUCTURE

SHEET NAME: CBR27C10-BRG-PIR-003

SHEET 32 OF 174

Jan, 18 2016 12:01 pm C:\Users\Hodges\appdata\local\temp\AcPublish_8104\CBR27C10-BRG-PIR-003.dwg By: hodges

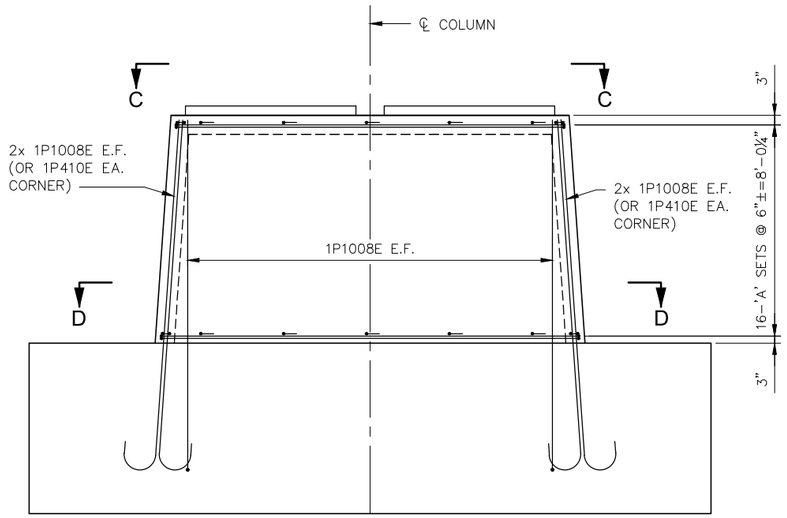

TRANSVERSE ELEVATION

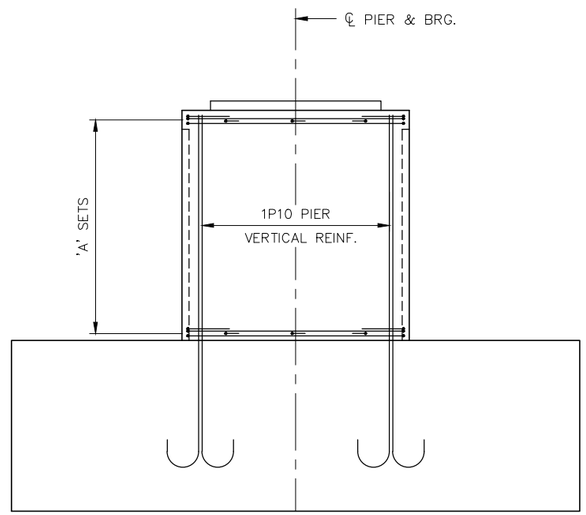

LONGITUDINAL ELEVATION

Jan, 18 2016 12:02 pm C:\Users\Hodges\appdata\local\temp\AcPublish_8104\CBR27C10-BRG-PIR-003.dwg By: hodgesj

NO.	DATE	BY	CHECK	DESIGN	REVISION / SUBMITTAL

DESIGNED BY: NMP | CHECKED BY: DST
DRAWN BY: SGS | CHECKED BY: DST

AECOM

90% SUBMISSION - 01/22/16

METROPOLITAN COUNCIL

SOUTHWEST Green Line LRT Extension

CIVIL - VOLUME 4D
EXCELSIOR BLVD
BRIDGE 27C10
PIER 1 REINFORCEMENT 2

DISCIPLINE: STRUCTURE

SHEET NAME: CBR27C10-BRG-PIR-004

SHEET 33 OF 174

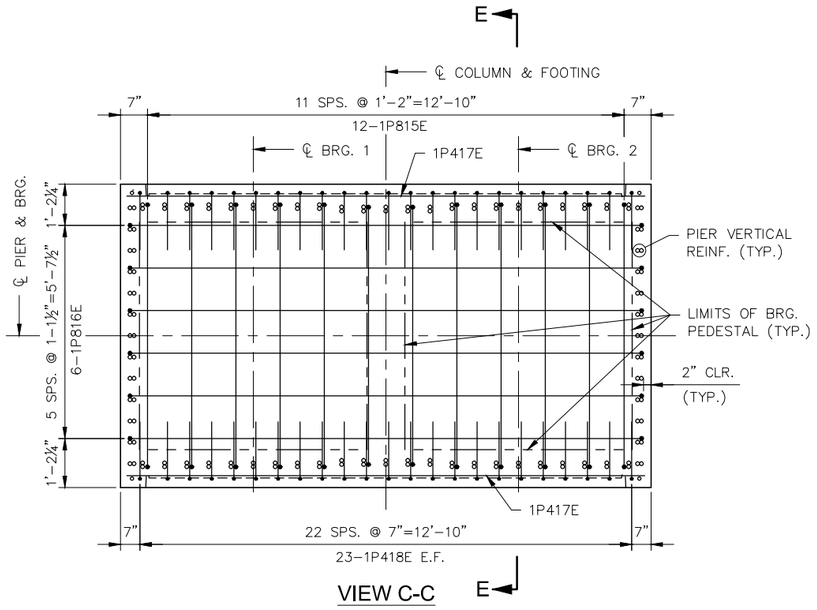

VIEW C-C

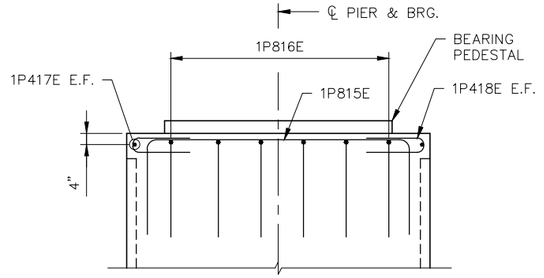

SECTION E-E

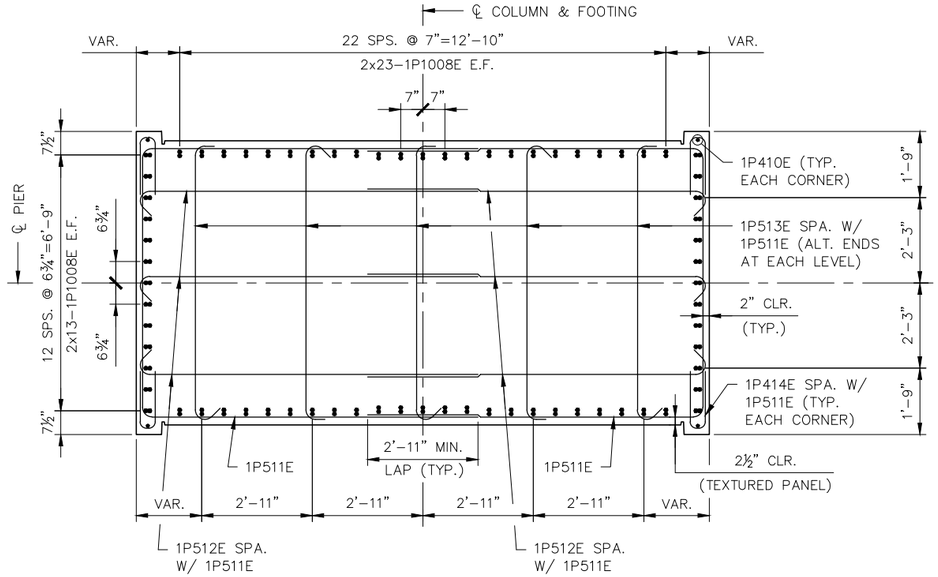

SECTION D-D

NO.	DATE	BY	CHECK	DESIGN	REVISION / SUBMITTAL

DESIGNED BY: NMP | CHECKED BY: DST
DRAWN BY: SGS | CHECKED BY: DST

AECOM

90% SUBMISSION - 01/22/16

METROPOLITAN COUNCIL

SOUTHWEST Green Line LRT Extension

CIVIL - VOLUME 4D
EXCELSIOR BLVD
BRIDGE 27C10
PIER 1 REINFORCEMENT 3

DISCIPLINE: STRUCTURE

SHEET NAME: CBR27C10-BRG-PIR-005

SHEET 34 OF 174

Jan, 18 2016 12:02 pm C:\Users\Hodgesj\appdata\local\temp\AcPublish_8104\CBR27C10-BRG-PIR-003.dwg By: hodgesj

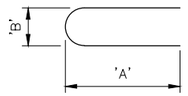

BAR	'A'	'B'
1P414E	1'–6"	4"
1P418E	1'–6"	4"

1P414E, 1P418E

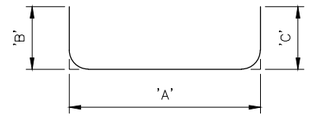

BAR	'A'	'B'	'C'
1P802	23'–3½"	1'–4"	1'–4"
1P803	19'–6"	5'–5"	5'–5"
1P804	23'–6"	5'–6"	5'–6"
1P807	19'–3½"	1'–4"	1'–4"
1P511E	7'–1"	8'–11"	8'–11"
1P815E	6'–11½"	3'–0"	3'–0"
1P816E	13'–6½"	3'–0"	3'–0"

1P802, 1P803, 1P804, 1P807,
1P511E, 1P815E, 1P816E

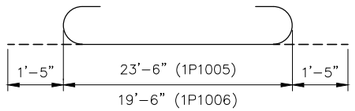

1P1005, 1P1006

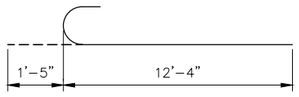

1P1008E

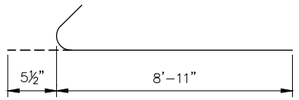

1P512E

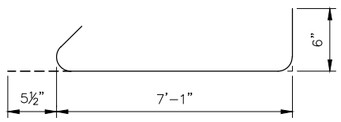

1P513E

BILL OF REINFORCEMENT PIER 4

BAR	NO.	LENGTH	SHAPE	LOCATION
1P802	10	26'–0"		FOOTING SIDE TRANSVERSE
1P803	23	30'–4"		FOOTING TOP LONGITUDINAL
1P804	19	34'–6"		FOOTING TOP TRANSVERSE
1P1005	74	26'–4"		FOOTING BOTTOM TRANSVERSE
1P1006	90	22'–4"		FOOTING BOTTOM LONGITUDINAL
1P807	10	22'–0"		FOOTING SIDE LONGITUDINAL
1P1008E	144	13'–9"		COLUMN VERTICAL
1P410E	4	7'–8"		COLUMN VERTICAL
1P511E	32	24'–11"		COLUMN TIE
1P512E	96	9'–5"		COLUMN TIE
1P513E	80	8'–1"		COLUMN TIE
1P414E	64	3'–4"		COLUMN TIE
1P815E	12	13'–0"		COLUMN TOP
1P816E	6	19'–7"		COLUMN TOP
1P417E	2	13'–8"		COLUMN TOP
1P418E	46	3'–4"		COLUMN TOP

NOTES:

'A' SETS CONSIST OF: 2–1P511E, 6–1P512E, 5–1P513E & 4–1P414E

LEGEND

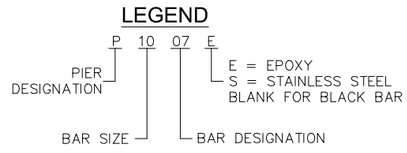

NO.	DATE	BY	CHECK	DESIGN	REVISION / SUBMITTAL

DESIGNED BY: NMP CHECKED BY: DST
DRAWN BY: SGS CHECKED BY: DST

AECOM

90% SUBMISSION - 01/22/16

METROPOLITAN COUNCIL

SOUTHWEST Green Line LRT Extension

CIVIL - VOLUME 4D
EXCELSIOR BLVD
BRIDGE 27C10
PIER 1 REINFORCEMENT 4

DISCIPLINE: STRUCTURE
SHEET NAME: CBR27C10-BRG-PIR-006

SHEET 35 OF 174

Jan, 18 2016 12:02 pm C:\Users\HodgesJ\appdata\local\temp\AcPublish_8104\CBR27C10-BRG-PIR-003.dwg By: hodgesj

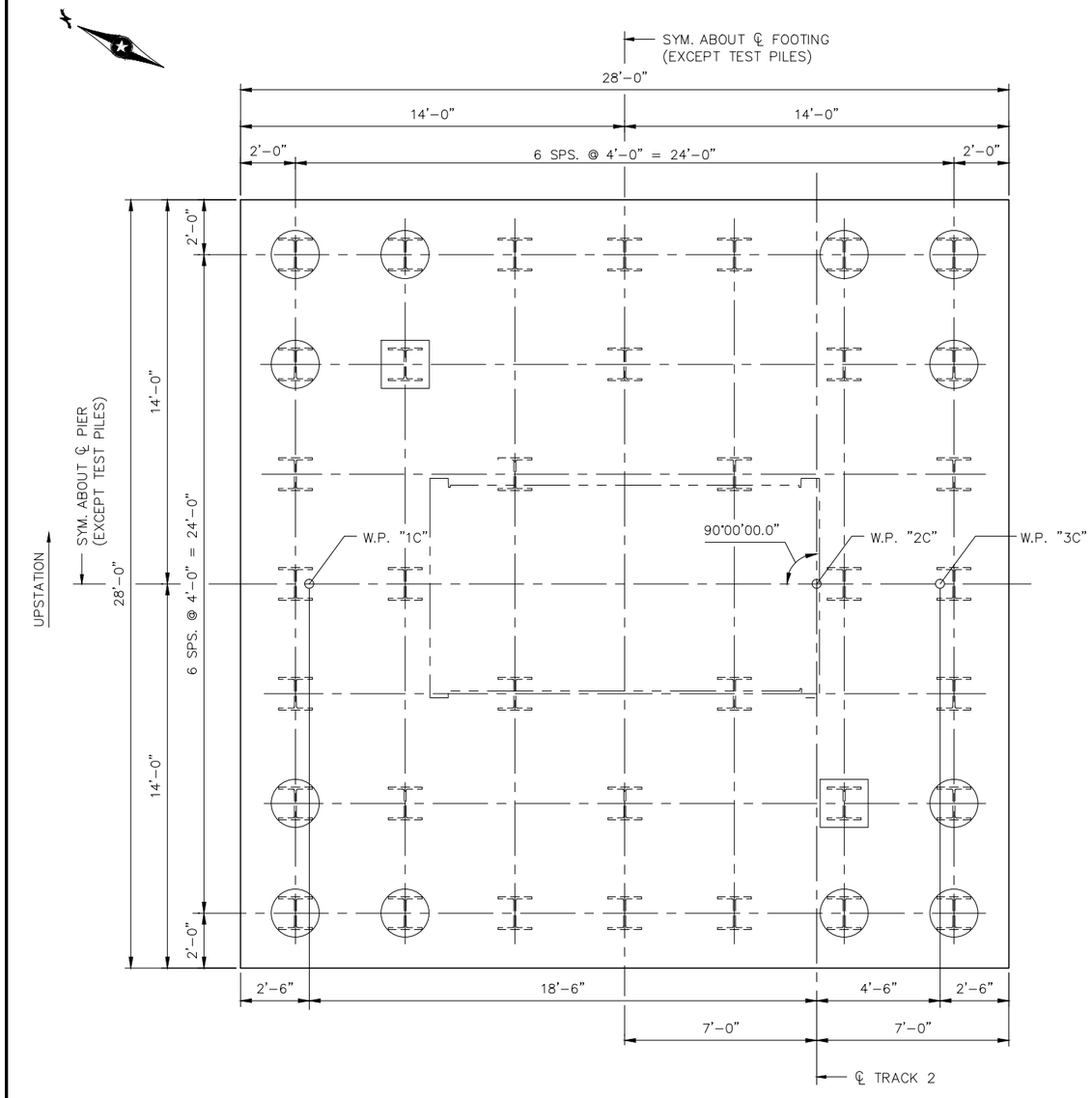

FOOTING PLAN

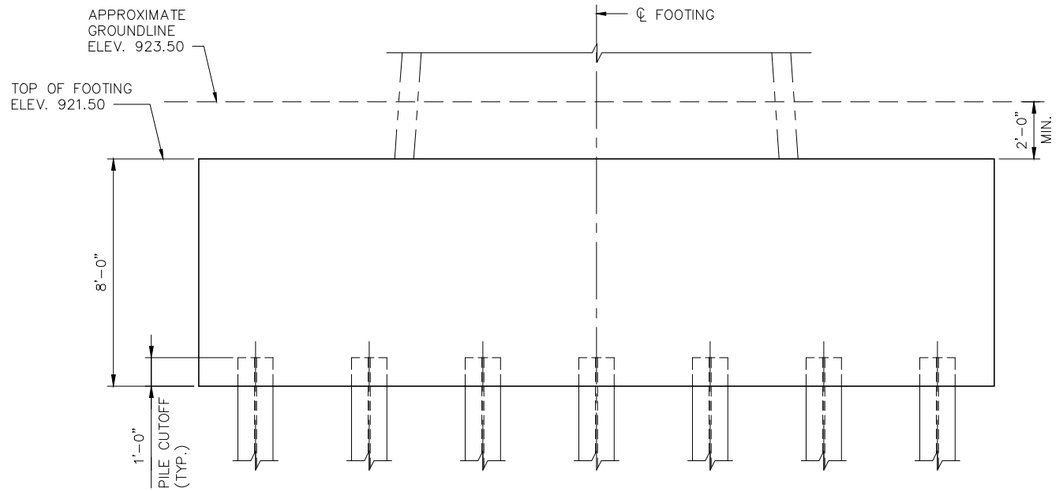

FOOTING ELEVATION

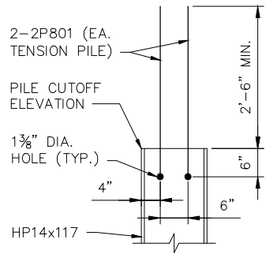

PILE ANCHORAGE DETAIL

PIER 2 COMPUTED PILE LOAD (TONS/PILE)		
FACTORED DEAD LOAD	126	88
FACTORED LIVE LOAD	0	0
FACTORED OVERTURNING	85	–98
FACTORED DESIGN LOAD	211	––
FACTORED DESIGN UPLIFT	––	–10
LOAD COMBINATION	STRENGTH III	STRENGTH III

PIER 2 REQUIRED NOMINAL PILE BEARING RESISTANCE FOR H-PILES Rn (TONS/PILE)		
FIELD CONTROL METHOD	ϕdyn	*Rn
MnDOT PILE FORMULA 2012 (MPF12)	0.60	352
PDA	0.65	325

*Rn = (FACTORED DESIGN LOAD)/ϕdyn

NOTES:

2 – STEEL HP TEST PILES 90 FT. LONG
34 – STEEL HP PILES EST. LENGTH 90 FT.
36 – STEEL HP PILES REQ'D FOR PIER 2

ALL PILES ARE HP14X117, ASTM A572, GRADE 50.

ALL PILES SHALL BE EQUIPPED WITH PILE TIP PROTECTION (ROCK POINTS).

PILE SPACING SHOWN IS AT BOTTOM OF FOOTING.

ALL PILES SHALL BE DRIVEN VERTICAL.

PILE LENGTHS ARE MINIMUM UNLESS APPROVED BY THE ENGINEER.

FOR PILE SPLICE DETAILS, SEE MnDOT STANDARD DETAIL B202. WELDED SPLICES SHALL BE IN ACCORDANCE WITH CONTRACT DOCUMENTS. DRIVE FIT SPLICES WILL NOT BE ALLOWED.

☐ DENOTES TEST PILES.

◯ DENOTES TENSION PILES, SEE PILE ANCHORAGE DETAIL THIS SHEET.

NO.	DATE	BY	CHECK	DESIGN	REVISION / SUBMITTAL

DESIGNED BY: NMP CHECKED BY: DST
DRAWN BY: SGS CHECKED BY: DST

AECOM

90% SUBMISSION - 01/22/16

METROPOLITAN COUNCIL

SOUTHWEST Green Line LRT Extension

CIVIL - VOLUME 4D
EXCELSIOR BLVD
BRIDGE 27C10
PIER 2 FOOTING DETAILS

DISCIPLINE: STRUCTURE
SHEET NAME: CBR27C10-BRG-PIR-007

SHEET 36 OF 174

Jan, 18 2016 12:04 pm V:\3400_ADC\CAD\SEGMENT E1\PLAN SHEETS\STRUCTURES\CBR27C10\CBR27C10-BRG-PIR-007.dwg By: hodgesj

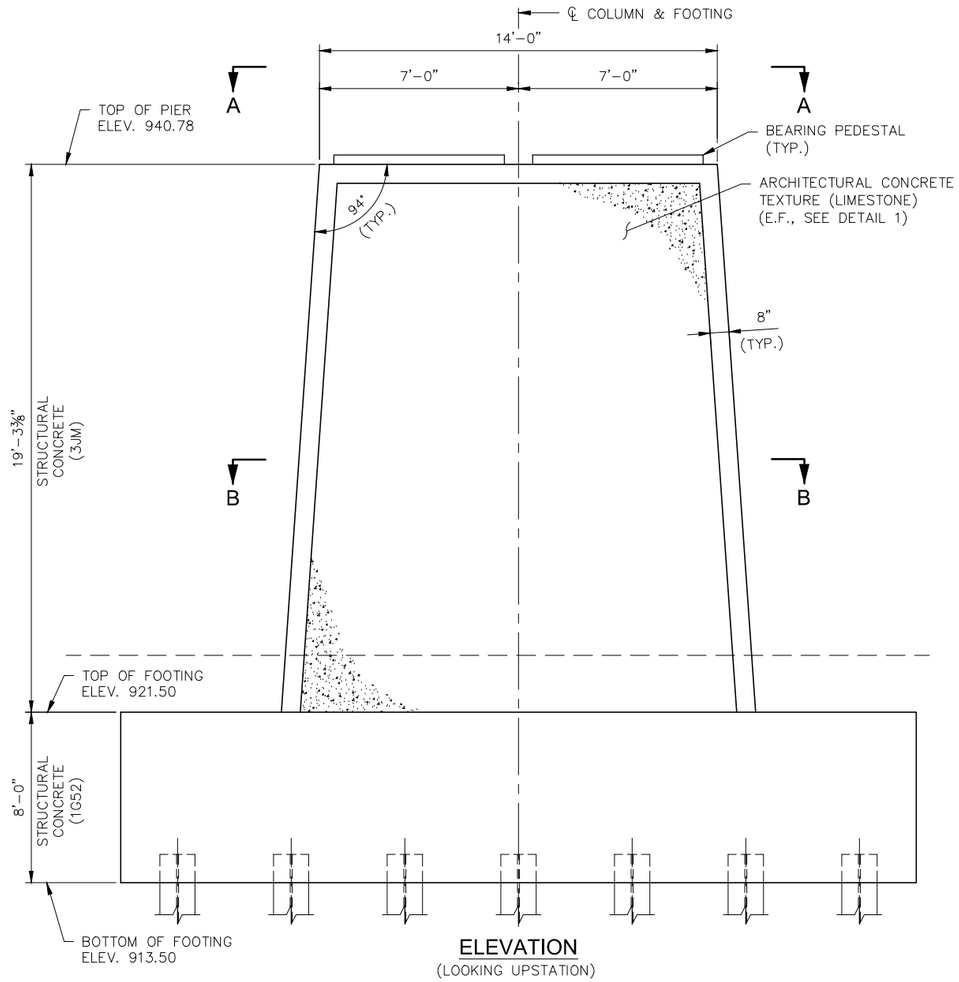

ELEVATION
(LOOKING UPSTATION)

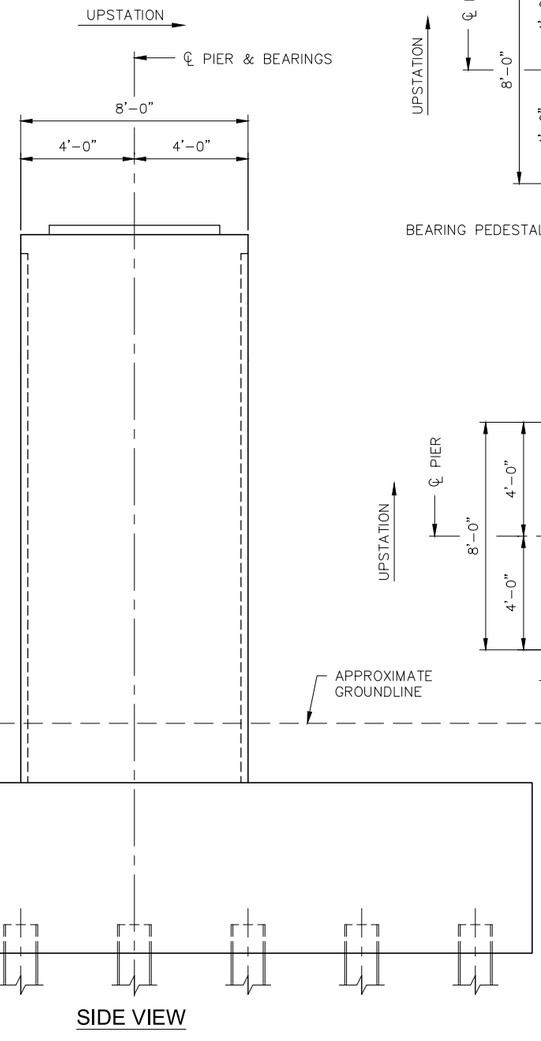

SIDE VIEW

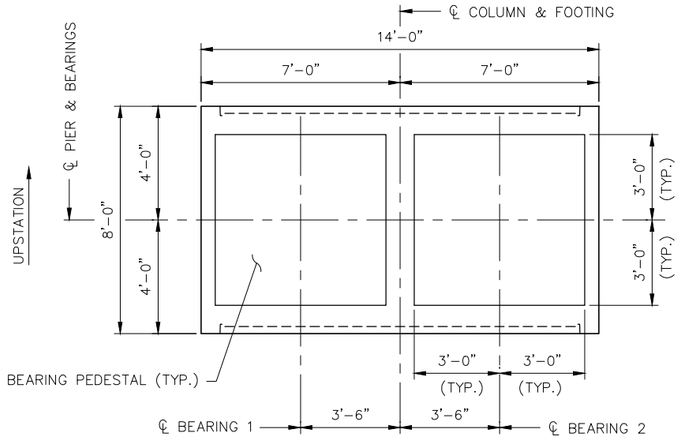

VIEW A-A

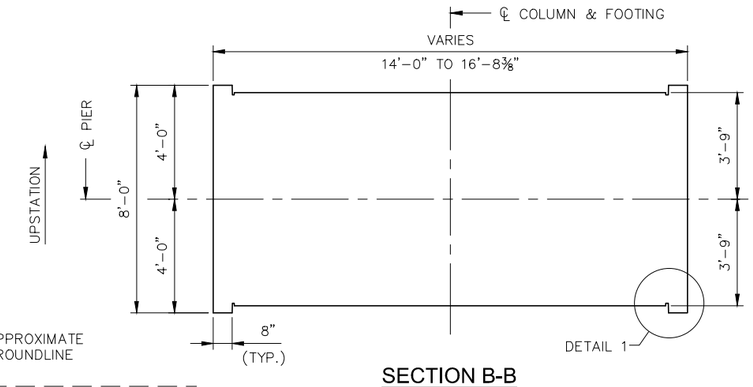

SECTION B-B

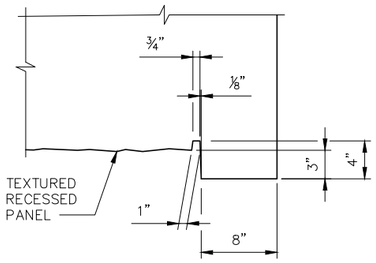

DETAIL 1

NOTES:

FINAL CONSTRUCTION ELEVATIONS FOR TOP OF PIER AND TOP OF BEARING PEDESTALS SHALL BE DETERMINED BY THE CONTRACTOR BASED ON THE ACTUAL HEIGHT OF THE BEARING ASSEMBLIES FURNISHED. FINAL ELEVATIONS SHALL BE REVIEWED AND APPROVED BY THE ENGINEER PRIOR TO STARTING WORK. ANY REQUIRED ADJUSTMENT OF THE TOP OF PIER ELEVATION SHALL BE MADE AT NO ADDITIONAL COST TO THE OWNER.

BEARING PEDESTALS SHALL HAVE A MINIMUM HEIGHT OF 3".

BEARING PEDESTALS SHALL BE STRUCTURAL CONCRETE (3JM).

FOR FOOTING DETAILS, SEE "PIER 2 FOOTING DETAILS" SHEET.

FOR BEARING DETAILS, SEE "BEARING DETAILS 1 & 2" SHEETS.

NO.	DATE	BY	CHECK	DESIGN	REVISION / SUBMITTAL

DESIGNED BY: NMP | CHECKED BY: DST
DRAWN BY: SGS | CHECKED BY: DST

AECOM

90% SUBMISSION - 01/22/16

METROPOLITAN COUNCIL

SOUTHWEST Green Line LRT Extension

CIVIL - VOLUME 4D
EXCELSIOR BLVD
BRIDGE 27C10
PIER 2 DETAILS

DISCIPLINE: STRUCTURE
SHEET NAME: CBR27C10-BRG-PIR-008

SHEET 37 OF 174

Jan, 18 2016 12:05 pm V:\3400_ADC\CAD\SEGMENT E1\PLAN SHEETS\STRUCTURES\CBR27C10\CBR27C10-BRG-PIR-008.dwg By: hodgesj

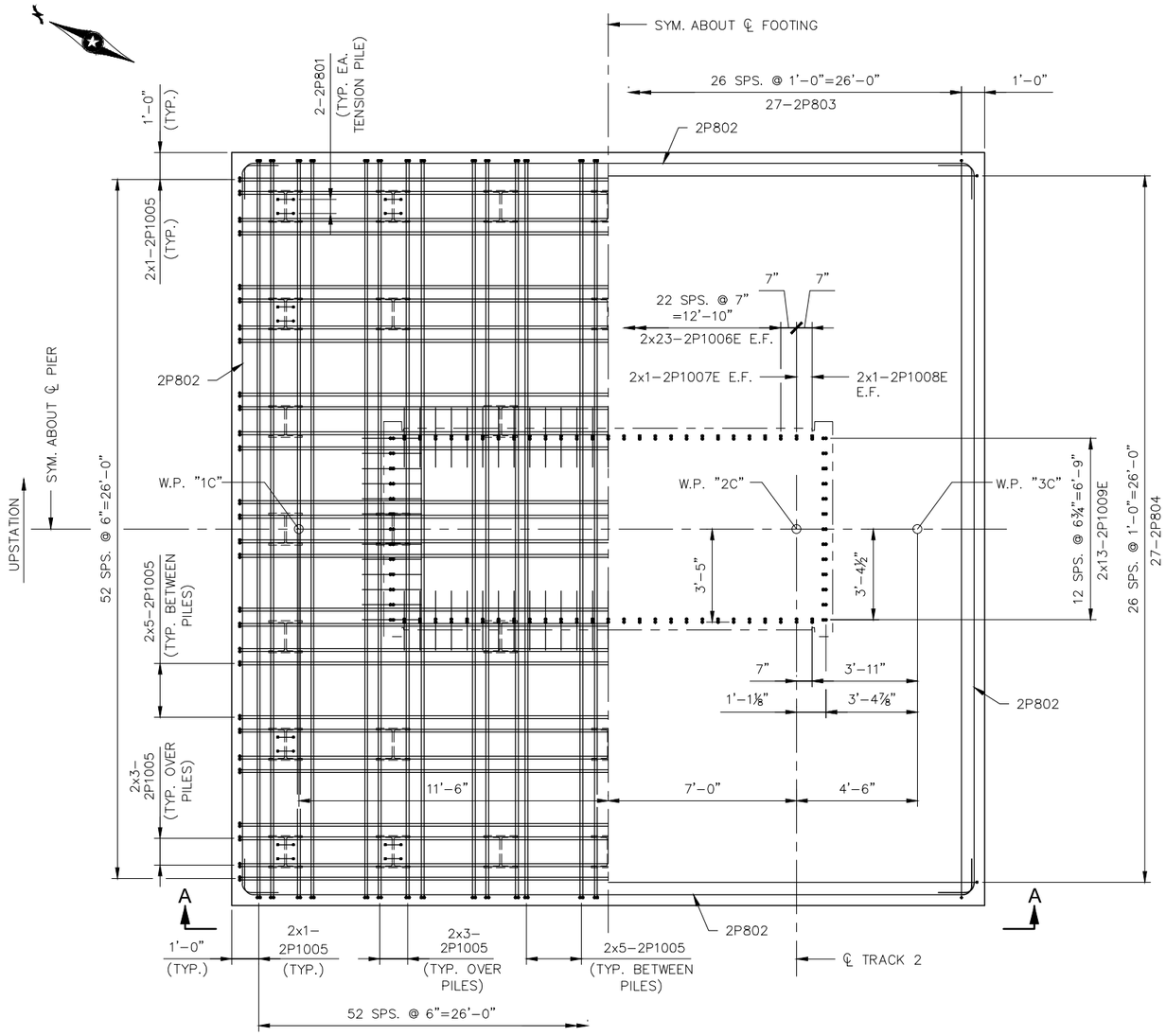

HALF-PLAN BOTTOM

HALF-PLAN TOP

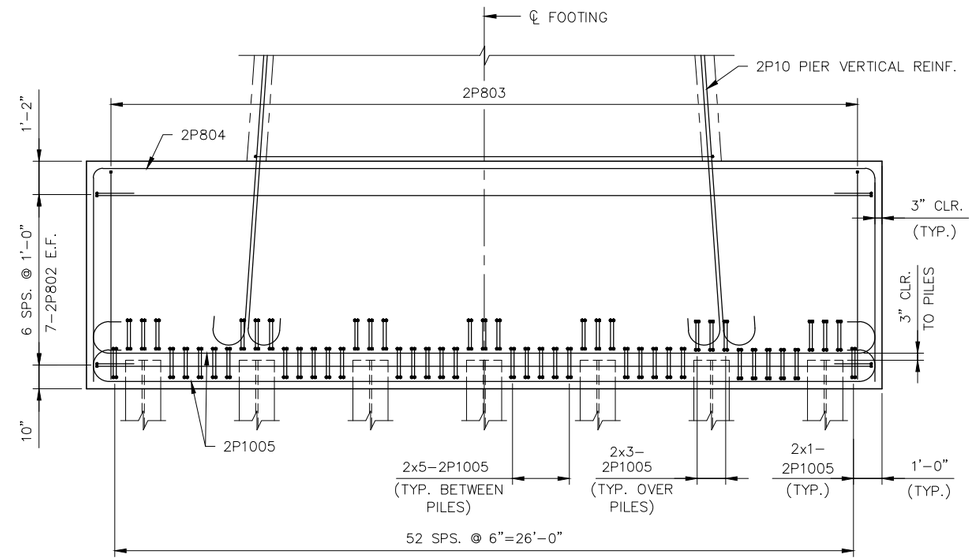

VIEW A-A

NO.	DATE	BY	CHECK	DESIGN	REVISION / SUBMITTAL

DESIGNED BY: NMP CHECKED BY: DST
DRAWN BY: SGS CHECKED BY: DST

AECOM

90% SUBMISSION - 01/22/16

METROPOLITAN COUNCIL

SOUTHWEST Green Line LRT Extension

CIVIL - VOLUME 4D
EXCELSIOR BLVD
BRIDGE 27C10
PIER 2 REINFORCEMENT 1

DISCIPLINE: STRUCTURE
SHEET NAME: CBR27C10-BRG-PIR-009

SHEET 38 OF 174

Jan, 18 2016 12:07 pm V:\3400_ADC\CAD\SEGMENT E1\PLAN SHEETS\STRUCTURES\CBR27C10\CBR27C10-BRG-PIR-009.dwg By: hodgesj

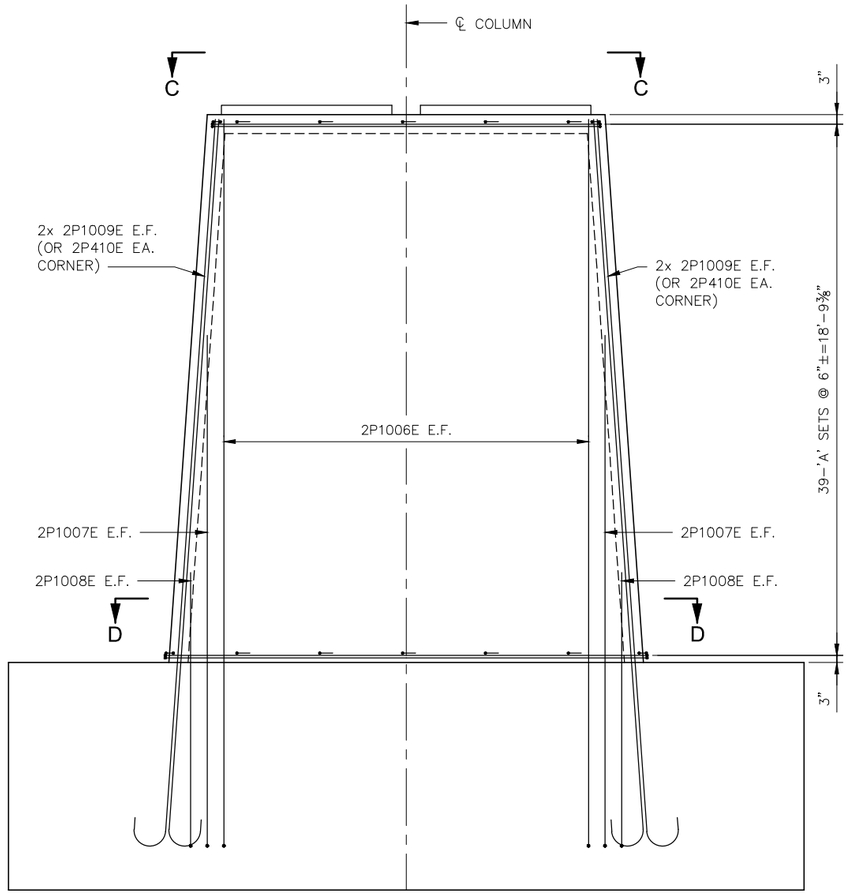

TRANSVERSE ELEVATION

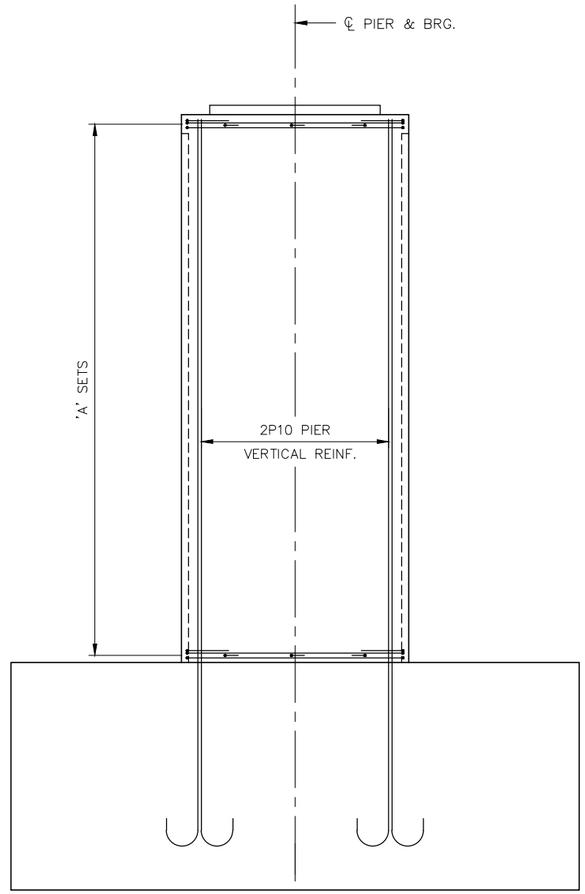

LONGITUDINAL ELEVATION

NO.	DATE	BY	CHECK	DESIGN	REVISION / SUBMITTAL

DESIGNED BY: NMP | CHECKED BY: DST
DRAWN BY: SGS | CHECKED BY: DST

AECOM

90% SUBMISSION - 01/22/16

METROPOLITAN COUNCIL

SOUTHWEST Green Line LRT Extension

CIVIL - VOLUME 4D
EXCELSIOR BLVD
BRIDGE 27C10
PIER 2 REINFORCEMENT 2

DISCIPLINE: STRUCTURE

SHEET NAME: CBR27C10-BRG-PIR-010

SHEET 39 OF 174

Jan, 18 2016 12:07 pm V:\3400_ADC\CAD\SEGMENT E1\PLAN SHEETS\STRUCTURES\CBR27C10\CBR27C10-BRG-PIR-009.dwg By: hodgesj

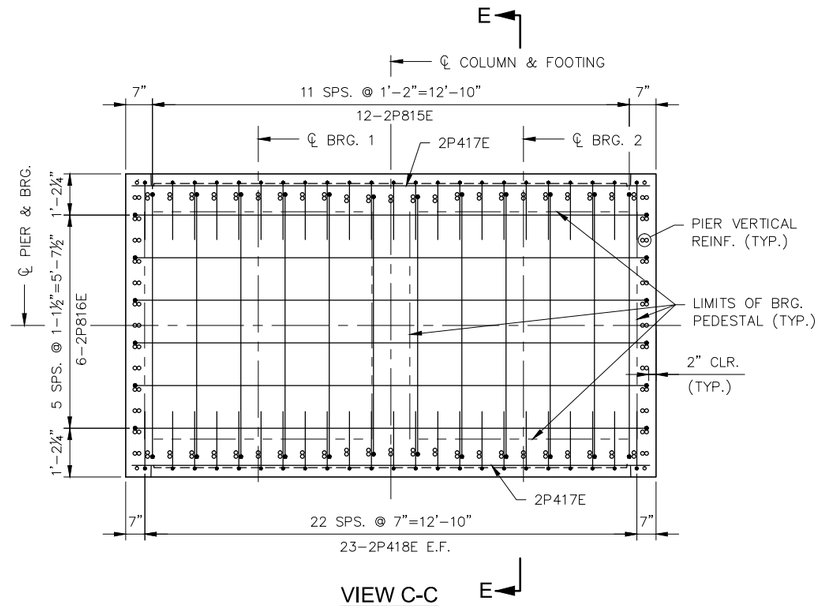

VIEW C-C

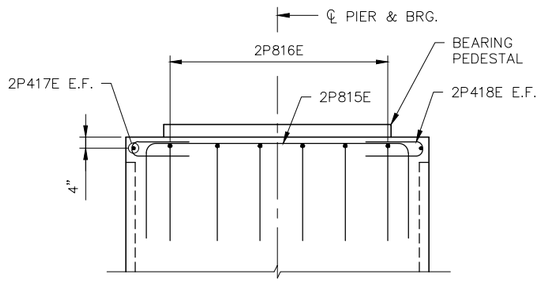

SECTION E-E

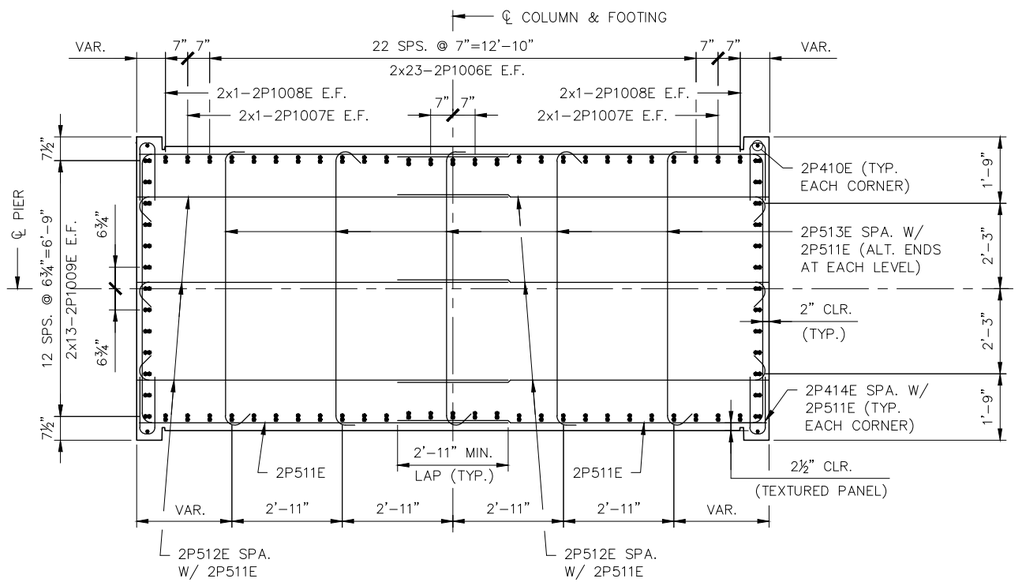

SECTION D-D

NO.	DATE	BY	CHECK	DESIGN	REVISION / SUBMITTAL

DESIGNED BY: NMP | CHECKED BY: DST
DRAWN BY: SGS | CHECKED BY: DST

AECOM

90% SUBMISSION - 01/22/16

METROPOLITAN COUNCIL

SOUTHWEST Green Line LRT Extension

CIVIL - VOLUME 4D
EXCELSIOR BLVD
BRIDGE 27C10
PIER 2 REINFORCEMENT 3

DISCIPLINE: STRUCTURE

SHEET NAME: CBR27C10-BRG-PIR-011

SHEET 40 OF 174

Jan, 18 2016 12:08 pm V:\3400_ADC\CAD\SEGMENT E1\PLAN SHEETS\STRUCTURES\CBR27C10\CBR27C10-BRG-PIR-009.dwg By: hodgesj

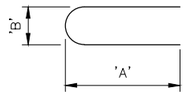

BAR	'A'	'B'
2P801	3'–0"	8"
2P414E	1'–6"	4"
2P418E	1'–6"	4"

2P801, 2P414E, 2P418E

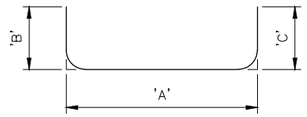

BAR	'A'	'B'	'C'
2P802	27'–3½"	1'–4"	1'–4"
2P803	27'–6"	7'–5"	7'–5"
2P804	27'–6"	7'–6"	7'–6"
2P511E	7'–1"	9'–8"	9'–8"
2P815E	6'–11½"	3'–0"	3'–0"
2P816E	13'–6½"	3'–0"	3'–0"

2P802, 2P803, 2P804,
2P511E, 2P815E, 2P816E

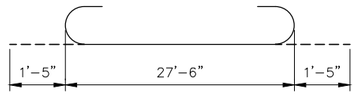

2P1005

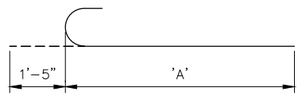

BAR	'A'
2P1006E	25'–8"
2P1007E	18'–3"
2P1008E	9'–11"
2P1009E	25'–9"

2P1006E, 2P1007E, 2P1008E, 2P1009E

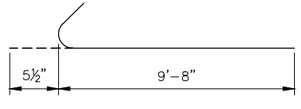

2P512E

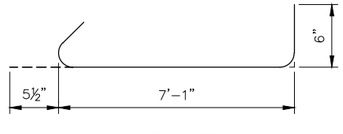

2P513E

BILL OF REINFORCEMENT PIER 2

BAR	NO.	LENGTH	SHAPE	LOCATION
2P801	24	6'–8"		TENSION PILES
2P802	28	30'–0"		FOOTING SIDES
2P803	27	42'–4"		FOOTING TOP LONGITUDINAL
2P804	27	42'–6"		FOOTING TOP TRANSVERSE
2P1005	212	30'–4"		FOOTING BOTTOM
2P1006E	92	27'–1"		COLUMN VERTICAL
2P1007E	8	19'–8"		COLUMN VERTICAL
2P1008E	8	11'–4"		COLUMN VERTICAL
2P1009E	52	27'–2"		COLUMN VERTICAL
2P410E	4	19'–0"		COLUMN VERTICAL
2P511E	78	26'–5"		COLUMN TIE
2P512E	234	10'–2"		COLUMN TIE
2P513E	195	8'–1"		COLUMN TIE
2P414E	156	3'–4"		COLUMN TIE
2P815E	12	13'–0"		COLUMN TOP
2P816E	6	19'–7"		COLUMN TOP
2P417E	2	13'–8"		COLUMN TOP
2P418E	46	3'–4"		COLUMN TOP

NOTES:

'A' SETS CONSIST OF: 2–2P511E, 6–2P512E, 5–2P513E & 4–2P414E

LEGEND

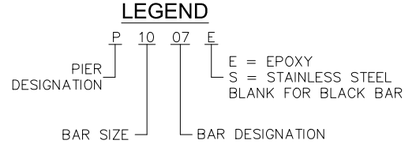

NO.	DATE	BY	CHECK	DESIGN	REVISION / SUBMITTAL

DESIGNED BY: NMP CHECKED BY: DST
DRAWN BY: SGS CHECKED BY: DST

AECOM

90% SUBMISSION - 01/22/16

METROPOLITAN COUNCIL

SOUTHWEST Green Line LRT Extension

CIVIL - VOLUME 4D
EXCELSIOR BLVD
BRIDGE 27C10
PIER 2 REINFORCEMENT 4

DISCIPLINE: STRUCTURE

SHEET NAME: CBR27C10-BRG-PIR-012

SHEET 41 OF 174

Jan, 18 2016 12:08 pm v:\3400_ADC\CAD\SEGMENT E1\PLAN SHEETS\STRUCTURES\CBR27C10\CBR27C10-BRG-PIR-009.dwg By: hodgesj

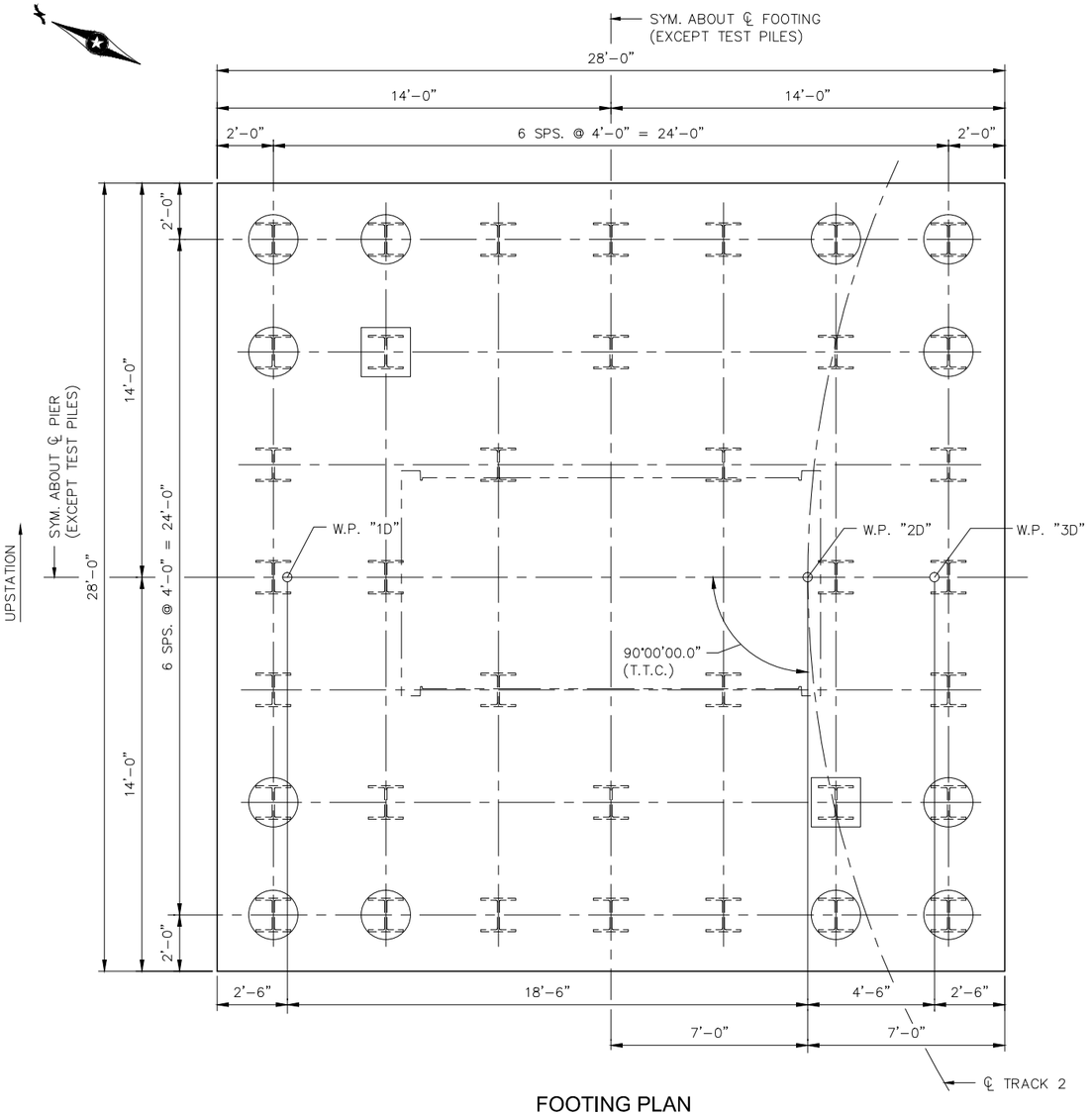

FOOTING PLAN

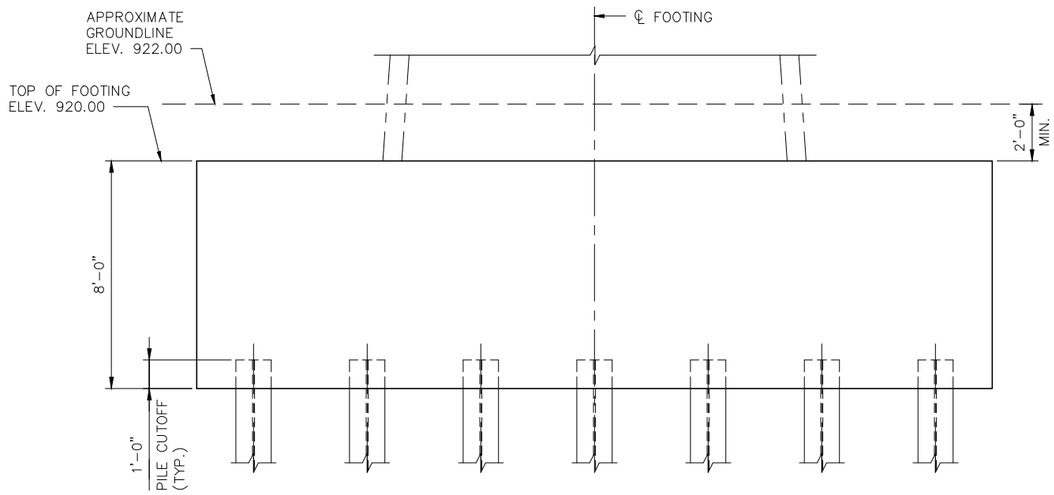

FOOTING ELEVATION

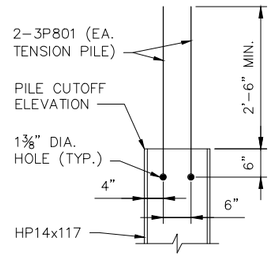

PILE ANCHORAGE DETAIL

PIER 3 COMPUTED PILE LOAD (TONS/PILE)		
FACTORED DEAD LOAD	138	96
FACTORED LIVE LOAD	0	0
FACTORED OVERTURNING	84	–99
FACTORED DESIGN LOAD	222	--
FACTORED DESIGN UPLIFT	--	–3
LOAD COMBINATION	STRENGTH III	STRENGTH III

PIER 3 REQUIRED NOMINAL PILE BEARING RESISTANCE FOR H-PILES Rn (TONS/PILE)		
FIELD CONTROL METHOD	ϕdyn	*Rn
MnDOT PILE FORMULA 2012 (MPF12)	0.60	370
PDA	0.65	342

*Rn = (FACTORED DESIGN LOAD)/ϕdyn

NOTES:

2 – STEEL HP TEST PILES 85 FT. LONG
34 – STEEL HP PILES EST. LENGTH 85 FT.
36 – STEEL HP PILES REQ'D FOR PIER 3

ALL PILES ARE HP14X117, ASTM A572, GRADE 50.

ALL PILES SHALL BE EQUIPPED WITH PILE TIP PROTECTION (ROCK POINTS).

PILE SPACING SHOWN IS AT BOTTOM OF FOOTING.

ALL PILES SHALL BE DRIVEN VERTICAL.

PILE LENGTHS ARE MINIMUM UNLESS APPROVED BY THE ENGINEER.

FOR PILE SPLICE DETAILS, SEE MnDOT STANDARD DETAIL B202. WELDED SPLICES SHALL BE IN ACCORDANCE WITH CONTRACT DOCUMENTS. DRIVE FIT SPLICES WILL NOT BE ALLOWED.

☐ DENOTES TEST PILES.

◯ DENOTES TENSION PILES, SEE PILE ANCHORAGE DETAIL THIS SHEET.

NO.	DATE	BY	CHECK	DESIGN	REVISION / SUBMITTAL

DESIGNED BY: NMP CHECKED BY: DST
DRAWN BY: SGS CHECKED BY: DST

AECOM

90% SUBMISSION - 01/22/16

METROPOLITAN COUNCIL

SOUTHWEST Green Line LRT Extension

CIVIL - VOLUME 4D
EXCELSIOR BLVD
BRIDGE 27C10
PIER 3 FOOTING DETAILS

DISCIPLINE: STRUCTURE

SHEET NAME: CBR27C10-BRG-PIR-013

SHEET 42 OF 174

Jan, 18 2016 12:10 pm v:\3400_ADC\CAD\SEGMENT E1\PLAN SHEETS\STRUCTURES\CBR27C10\CBR27C10-BRG-PIR-013.dwg By: hodges

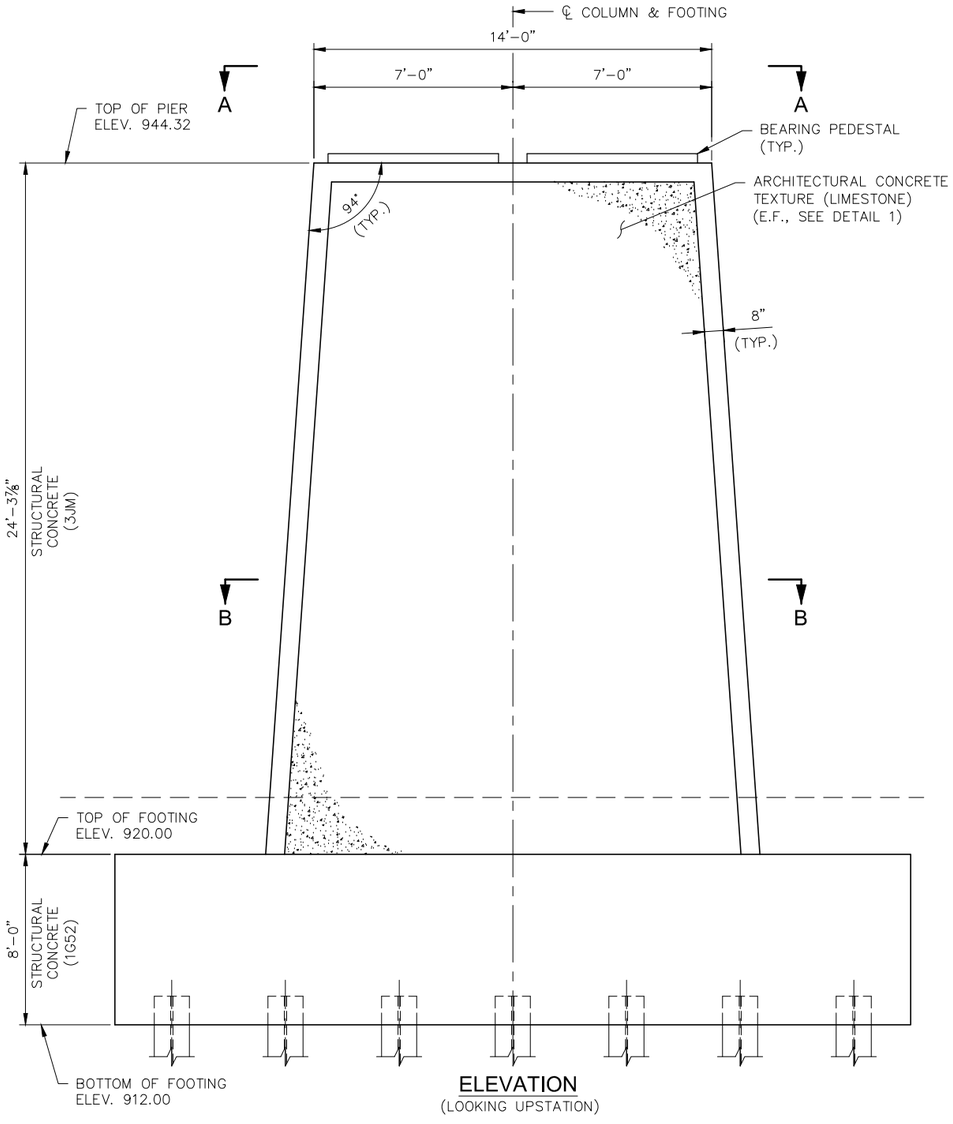

ELEVATION
(LOOKING UPSTATION)

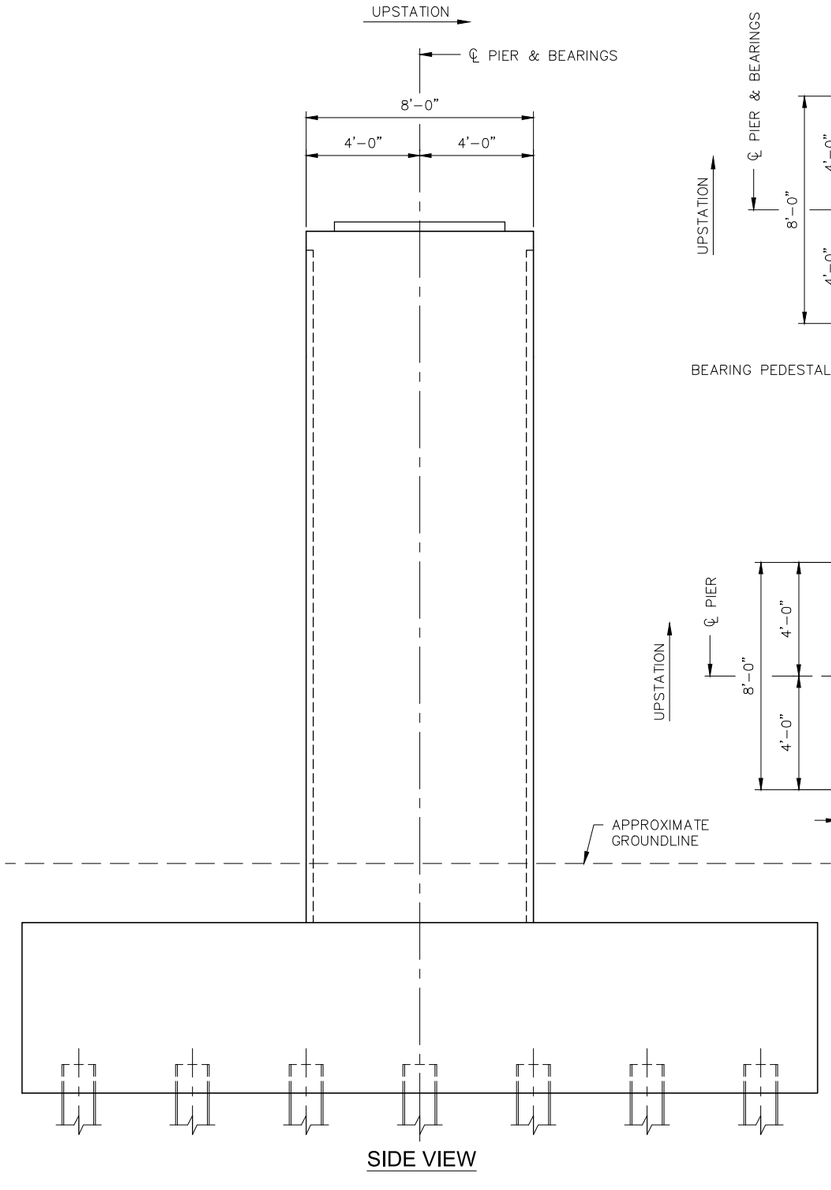

SIDE VIEW

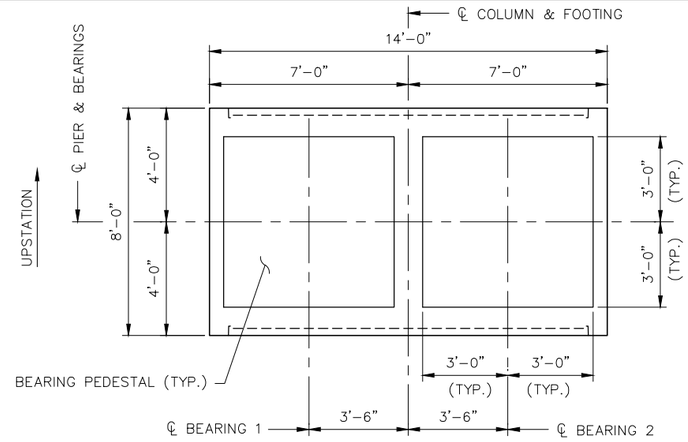

VIEW A-A

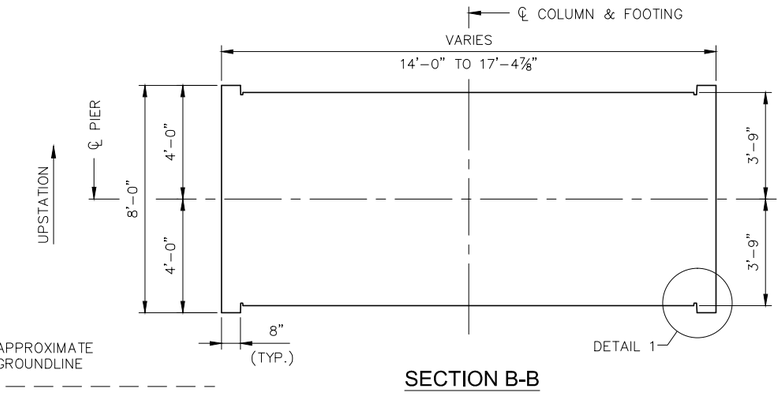

SECTION B-B

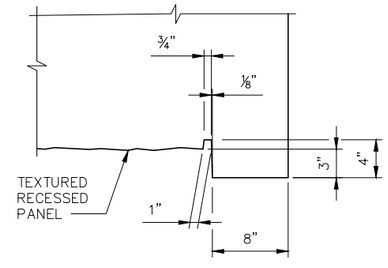

DETAIL 1

NOTES:

FINAL CONSTRUCTION ELEVATIONS FOR TOP OF PIER AND TOP OF BEARING PEDESTALS SHALL BE DETERMINED BY THE CONTRACTOR BASED ON THE ACTUAL HEIGHT OF THE BEARING ASSEMBLIES FURNISHED. FINAL ELEVATIONS SHALL BE REVIEWED AND APPROVED BY THE ENGINEER PRIOR TO STARTING WORK. ANY REQUIRED ADJUSTMENT OF THE TOP OF PIER ELEVATION SHALL BE MADE AT NO ADDITIONAL COST TO THE OWNER.

BEARING PEDESTALS SHALL HAVE A MINIMUM HEIGHT OF 3".

BEARING PEDESTALS SHALL BE STRUCTURAL CONCRETE (3JM).

FOR FOOTING DETAILS, SEE "PIER 3 FOOTING DETAILS" SHEET.

FOR BEARING DETAILS, SEE "BEARING DETAILS 1 & 2" SHEETS.

NO.	DATE	BY	CHECK	DESIGN	REVISION / SUBMITTAL

DESIGNED BY: NMP | CHECKED BY: DST
DRAWN BY: SGS | CHECKED BY: DST

AECOM

90% SUBMISSION - 01/22/16

METROPOLITAN COUNCIL

SOUTHWEST Green Line LRT Extension

CIVIL - VOLUME 4D
EXCELSIOR BLVD
BRIDGE 27C10
PIER 3 DETAILS

DISCIPLINE: STRUCTURE

SHEET NAME: CBR27C10-BRG-PIR-014

SHEET 43 OF 174

Jan, 18 2016 12:12 pm v:\3400_ADC\CAD\SEGMENT E1\PLAN SHEETS\STRUCTURES\CBR27C10\CBR27C10-BRG-PIR-014.dwg By: hodges

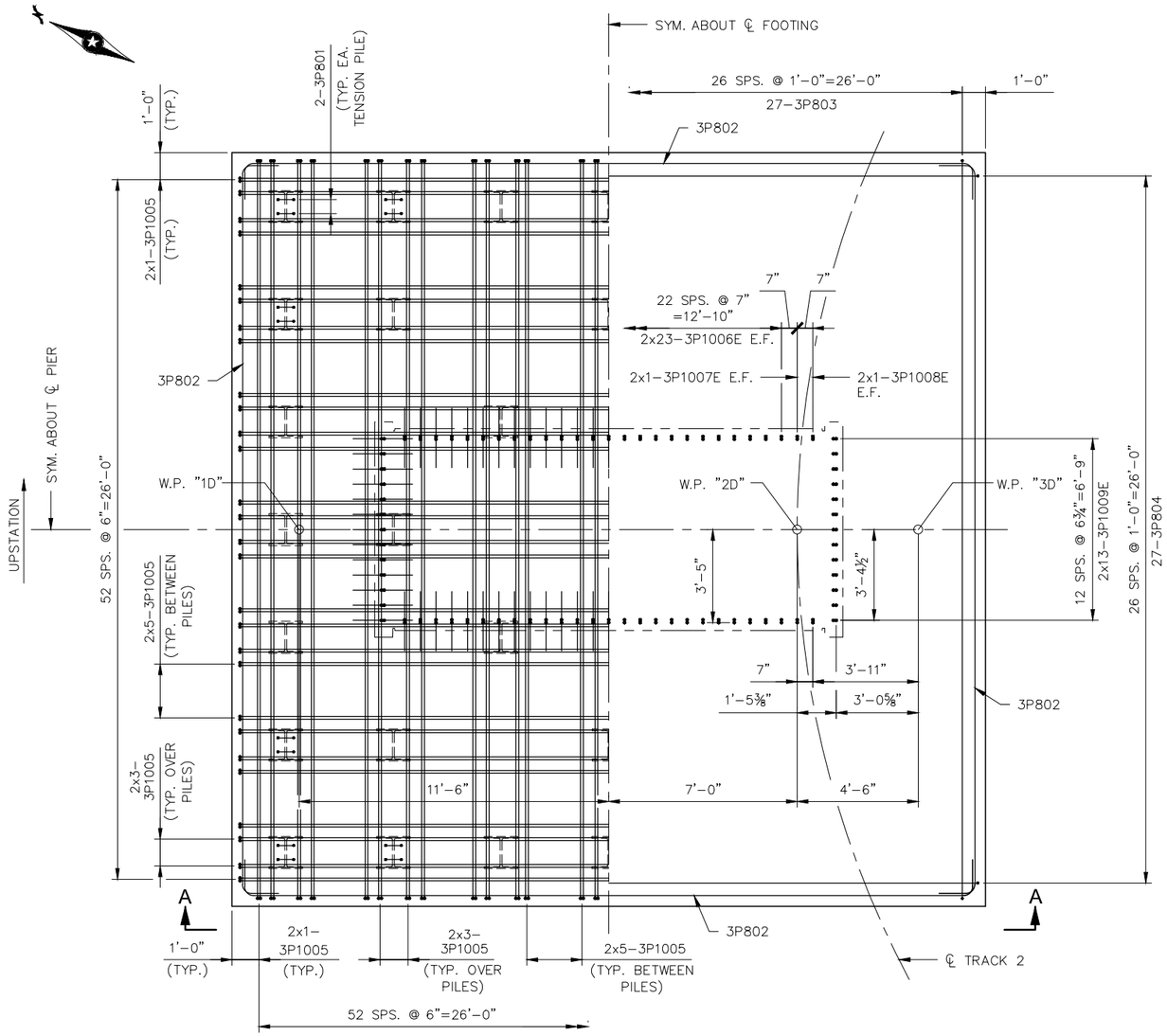

HALF-PLAN BOTTOM

HALF-PLAN TOP

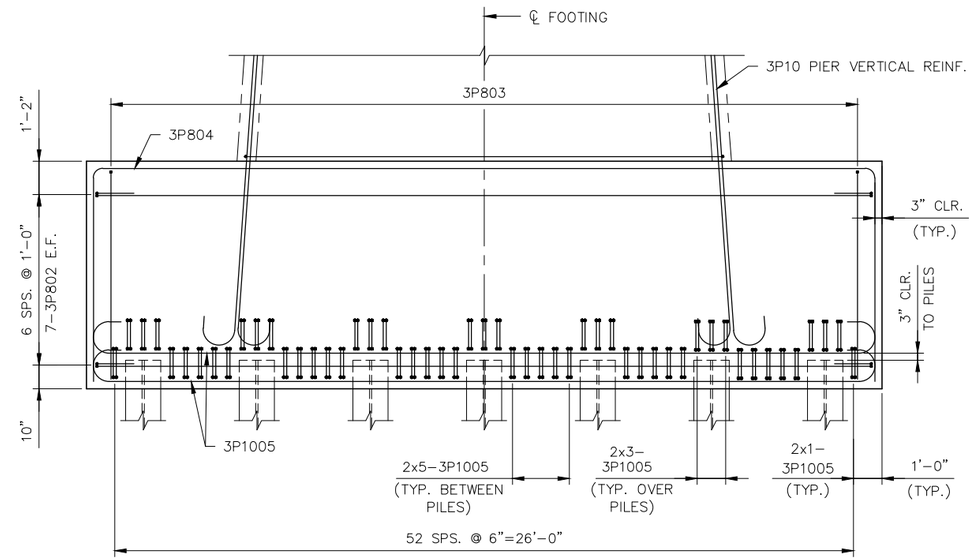

VIEW A-A

NO.	DATE	BY	CHECK	DESIGN	REVISION / SUBMITTAL

DESIGNED BY: NMP | CHECKED BY: DST
DRAWN BY: SGS | CHECKED BY: DST

AECOM

90% SUBMISSION - 01/22/16

METROPOLITAN COUNCIL

SOUTHWEST Green Line LRT Extension

CIVIL - VOLUME 4D
EXCELSIOR BLVD
BRIDGE 27C10
PIER 3 REINFORCEMENT 1

DISCIPLINE: STRUCTURE

SHEET NAME: CBR27C10-BRG-PIR-015

SHEET 44 OF 174

Jan, 18 2016 12:15 pm V:\3400_ADC\CAD\SEGMENT E1\PLAN SHEETS\STRUCTURES\CBR27C10\CBR27C10-BRG-PIR-015.dwg By: hodges

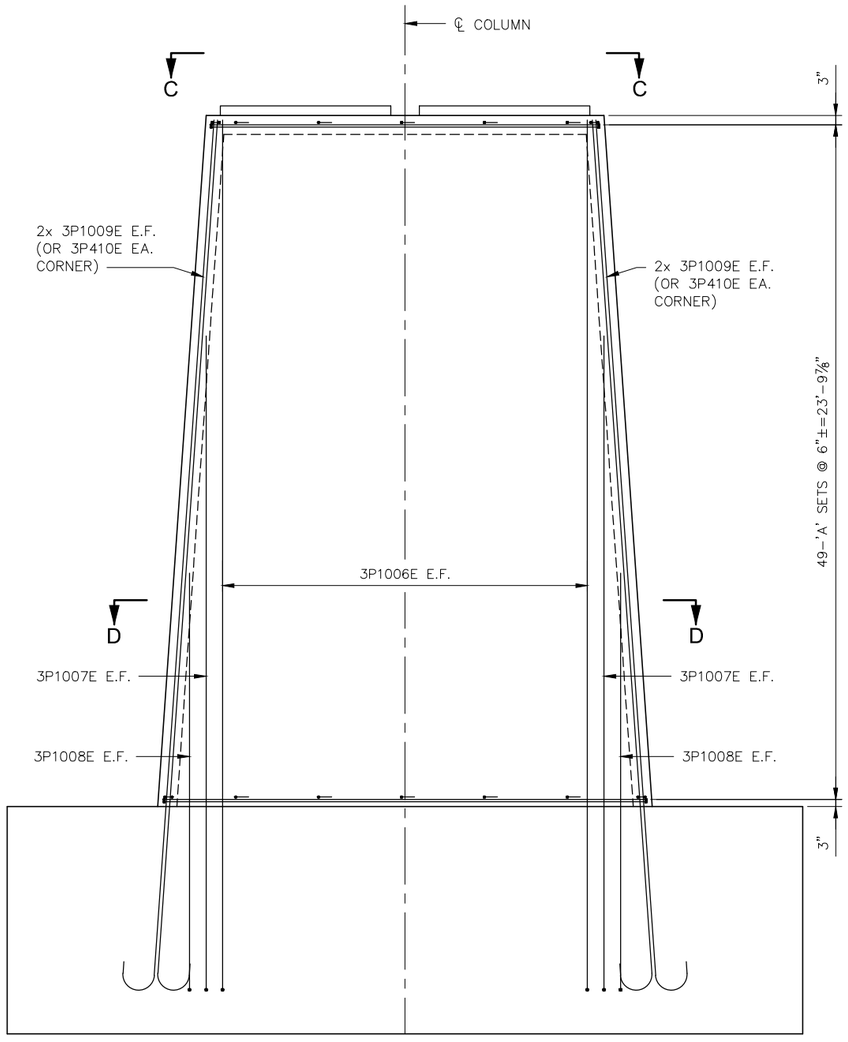

TRANSVERSE ELEVATION

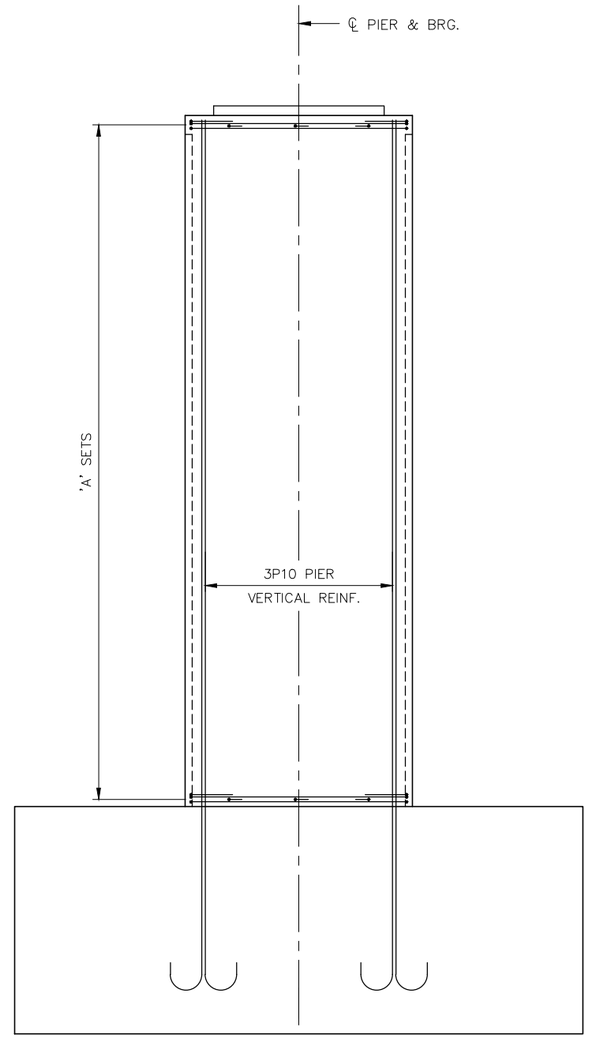

LONGITUDINAL ELEVATION

NO.	DATE	BY	CHECK	DESIGN	REVISION / SUBMITTAL

DESIGNED BY: NMP CHECKED BY: DST
DRAWN BY: SGS CHECKED BY: DST

AECOM

90% SUBMISSION - 01/22/16

METROPOLITAN COUNCIL

SOUTHWEST Green Line LRT Extension

CIVIL - VOLUME 4D
EXCELSIOR BLVD
BRIDGE 27C10
PIER 3 REINFORCEMENT 2

DISCIPLINE: STRUCTURE

SHEET NAME: CBR27C10-BRG-PIR-016

SHEET 45 OF 174

Jan, 18 2016 12:16 pm V:\3400_ADC\CAD\SEGMENT E1\PLAN SHEETS\STRUCTURES\CBR27C10\CBR27C10-BRG-PIR-015.dwg By: hodges

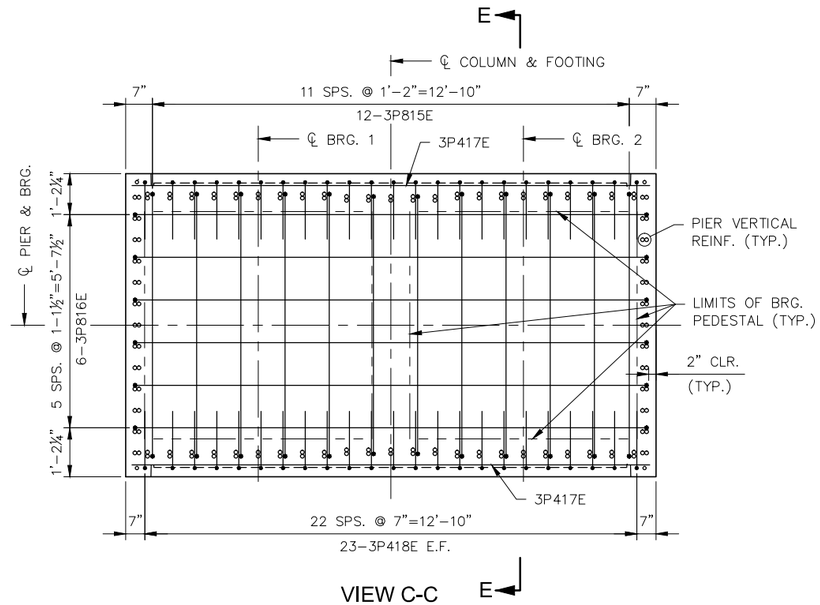

VIEW C-C

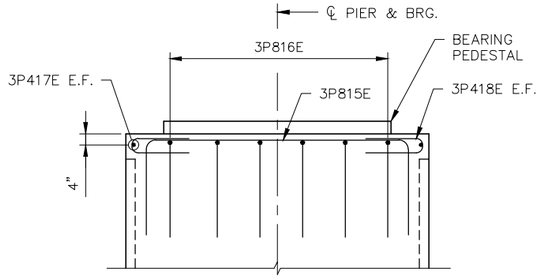

SECTION E-E

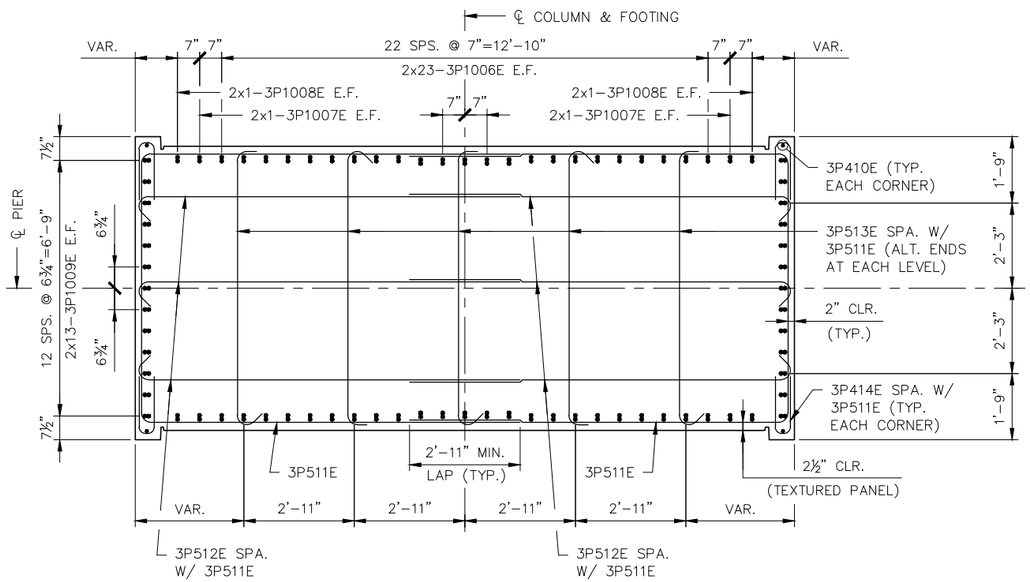

SECTION D-D

NO.	DATE	BY	CHECK	DESIGN	REVISION / SUBMITTAL

DESIGNED BY: NMP | CHECKED BY: DST
DRAWN BY: SGS | CHECKED BY: DST

AECOM

90% SUBMISSION - 01/22/16

METROPOLITAN COUNCIL

SOUTHWEST Green Line LRT Extension

CIVIL - VOLUME 4D
EXCELSIOR BLVD
BRIDGE 27C10
PIER 3 REINFORCEMENT 3

DISCIPLINE: STRUCTURE
SHEET NAME: CBR27C10-BRG-PIR-017

SHEET 46 OF 174

Jan, 18 2016 12:16 pm v:\3400_ADC\CAD\SEGMENT E1\PLAN SHEETS\STRUCTURES\CBR27C10\CBR27C10-BRG-PIR-015.dwg By: hodgesj

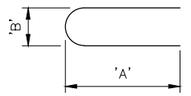

BAR	'A'	'B'
3P801	3'–0"	8"
3P414E	1'–6"	4"
3P418E	1'–6"	4"

3P801, 3P414E, 3P418E

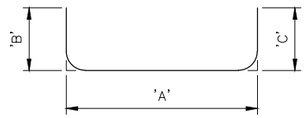

BAR	'A'	'B'	'C'
3P802	27'–3½"	1'–4"	1'–4"
3P803	27'–6"	7'–5"	7'–5"
3P804	27'–6"	7'–6"	7'–6"
3P511E	7'–1"	10'–0"	10'–0"
3P815E	6'–11½"	3'–0"	3'–0"
3P816E	13'–6½"	3'–0"	3'–0"

3P802, 3P803, 3P804,
3P511E, 3P815E, 3P816E

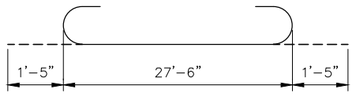

3P1005

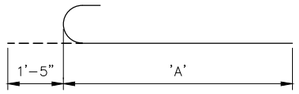

BAR	'A'
3P1006E	30'–8"
3P1007E	23'–3"
3P1008E	14'–11"
3P1009E	30'–9"

3P1006E, 3P1007E, 3P1008E, 3P1009E

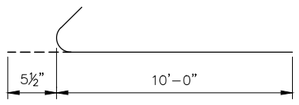

3P512E

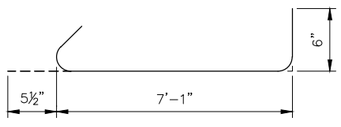

3P513E

BILL OF REINFORCEMENT PIER 3

BAR	NO.	LENGTH	SHAPE	LOCATION
3P801	24	6'–8"		TENSION PILES
3P802	28	30'–0"		FOOTING SIDES
3P803	27	42'–4"		FOOTING TOP LONGITUDINAL
3P804	27	42'–6"		FOOTING TOP TRANSVERSE
3P1005	212	30'–4"		FOOTING BOTTOM
3P1006E	92	32'–1"		COLUMN VERTICAL
3P1007E	8	24'–8"		COLUMN VERTICAL
3P1008E	8	16'–4"		COLUMN VERTICAL
3P1009E	52	32'–2"		COLUMN VERTICAL
3P410E	4	24'–0"		COLUMN VERTICAL
3P511E	98	27'–1"		COLUMN TIE
3P512E	294	10'–6"		COLUMN TIE
3P513E	245	8'–1"		COLUMN TIE
3P414E	196	3'–4"		COLUMN TIE
3P815E	12	13'–0"		COLUMN TOP
3P816E	6	19'–7"		COLUMN TOP
3P417E	2	13'–8"		COLUMN TOP
3P418E	46	3'–4"		COLUMN TOP

NOTES:

'A' SETS CONSIST OF: 2–3P511E, 6–3P512E, 5–3P513E & 4–3P414E

LEGEND

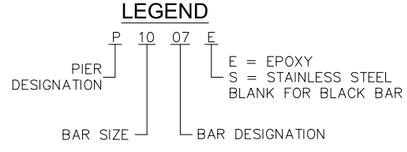

NO.	DATE	BY	CHECK	DESIGN	REVISION / SUBMITTAL

DESIGNED BY: NMP | CHECKED BY: DST
DRAWN BY: SGS | CHECKED BY: DST

AECOM

90% SUBMISSION - 01/22/16

METROPOLITAN COUNCIL

SOUTHWEST Green Line LRT Extension

CIVIL - VOLUME 4D
EXCELSIOR BLVD
BRIDGE 27C10
PIER 3 REINFORCEMENT 4

DISCIPLINE: STRUCTURE

SHEET NAME: CBR27C10-BRG-PIR-018

SHEET 47 OF 174

Jan, 18 2016 12:16 pm V:\3400_ADC\CAD\SEGMENT E1\PLAN SHEETS\STRUCTURES\CBR27C10\CBR27C10-BRG-PIR-015.dwg By: hodgesj

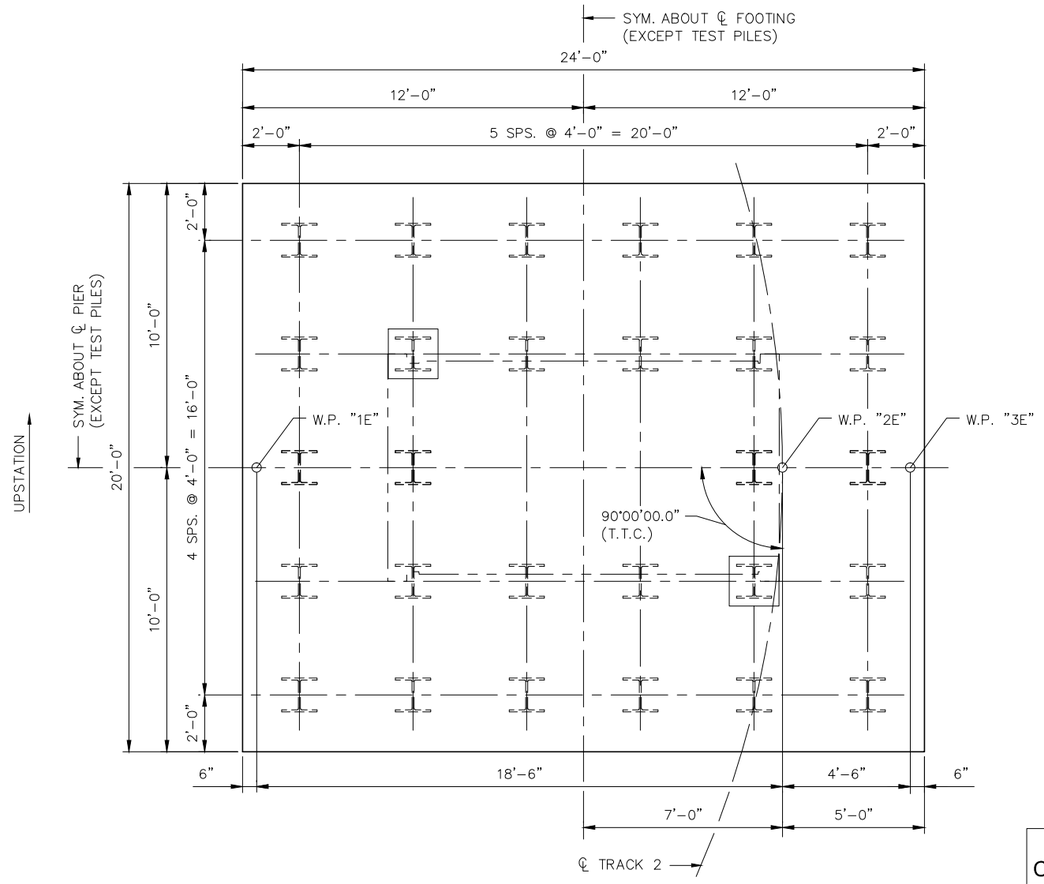

FOOTING PLAN

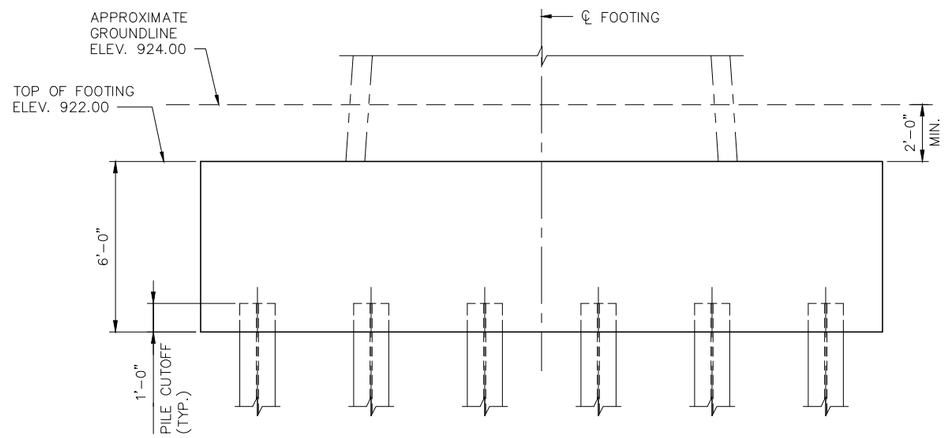

FOOTING ELEVATION

PIER 4 COMPUTED PILE LOAD (TONS/PILE)	
FACTORED DEAD LOAD	136
FACTORED LIVE LOAD	21
FACTORED OVERTURNING	45
FACTORED DESIGN LOAD	202
FACTORED DESIGN UPLIFT	––
LOAD COMBINATION	STRENGTH V

PIER 4 REQUIRED NOMINAL PILE BEARING RESISTANCE FOR H-PILES Rn (TONS/PILE)		
FIELD CONTROL METHOD	ϕdyn	*Rn
MnDOT PILE FORMULA 2012 (MPF12)	0.60	337
PDA	0.65	311

*Rn = (FACTORED DESIGN LOAD)/ϕdyn

NOTES:

2 – STEEL HP TEST PILES 85 FT. LONG
26 – STEEL HP PILES EST. LENGTH 85 FT.
28 – STEEL HP PILES REQ'D FOR PIER 4

ALL PILES ARE HP14X117, ASTM A572, GRADE 50.

ALL PILES SHALL BE EQUIPPED WITH PILE TIP PROTECTION (ROCK POINTS).

PILE SPACING SHOWN IS AT BOTTOM OF FOOTING.

ALL PILES SHALL BE DRIVEN VERTICAL.

PILE LENGTHS ARE MINIMUM UNLESS APPROVED BY THE ENGINEER.

FOR PILE SPLICE DETAILS, SEE MnDOT STANDARD DETAIL B202. WELDED SPLICES SHALL BE IN ACCORDANCE WITH CONTRACT DOCUMENTS. DRIVE FIT SPLICES WILL NOT BE ALLOWED.

☐ DENOTES TEST PILES.

NO.	DATE	BY	CHECK	DESIGN	REVISION / SUBMITTAL

DESIGNED BY: NMP CHECKED BY: DST
DRAWN BY: SGS CHECKED BY: DST

AECOM

90% SUBMISSION - 01/22/16

METROPOLITAN COUNCIL

SOUTHWEST Green Line LRT Extension

CIVIL - VOLUME 4D
EXCELSIOR BLVD
BRIDGE 27C10
PIER 4 FOOTING DETAILS

DISCIPLINE: STRUCTURE
SHEET NAME: CBR27C10-BRG-PIR-019

SHEET 48 OF 174

Jan, 18 2016 12:18 pm V:\3400_ADC\CAD\SEGMENT E1\PLAN SHEETS\STRUCTURES\CBR27C10\CBR27C10-BRG-PIR-019.dwg By: hodges

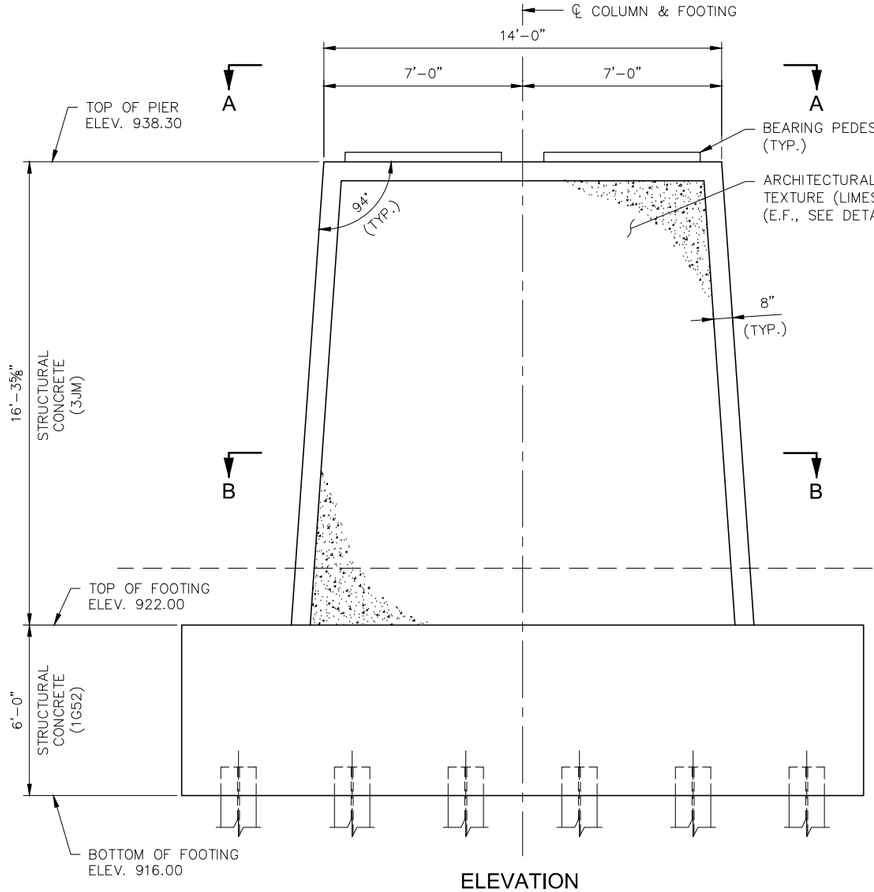

ELEVATION
(LOOKING UPSTATION)

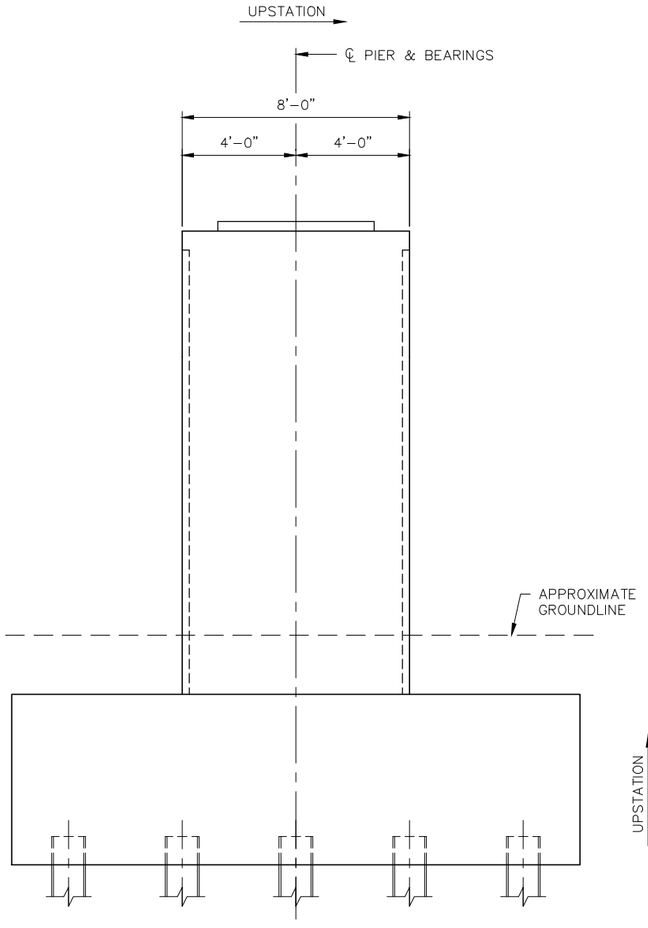

SIDE VIEW

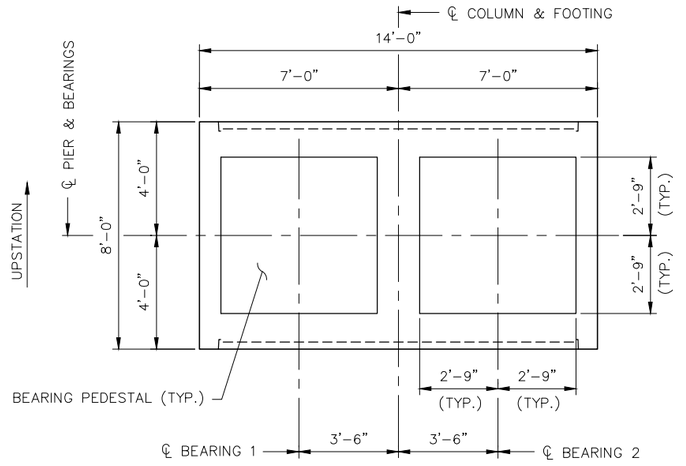

VIEW A-A

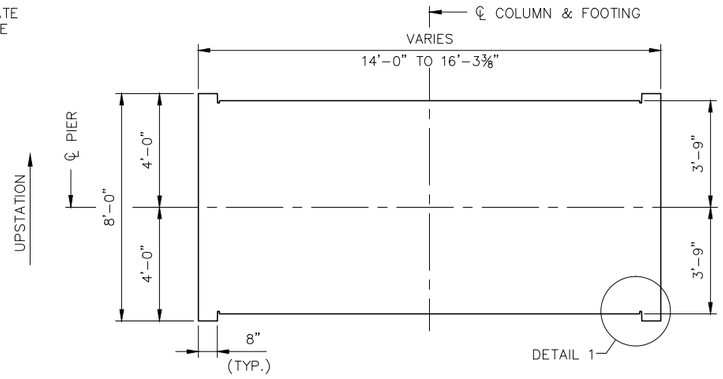

SECTION B-B

NOTES:

FINAL CONSTRUCTION ELEVATIONS FOR TOP OF PIER AND TOP OF BEARING PEDESTALS SHALL BE DETERMINED BY THE CONTRACTOR BASED ON THE ACTUAL HEIGHT OF THE BEARING ASSEMBLIES FURNISHED. FINAL ELEVATIONS SHALL BE REVIEWED AND APPROVED BY THE ENGINEER PRIOR TO STARTING WORK. ANY REQUIRED ADJUSTMENT OF THE TOP OF PIER ELEVATION SHALL BE MADE AT NO ADDITIONAL COST TO THE OWNER.

BEARING PEDESTALS SHALL HAVE A MINIMUM HEIGHT OF 3".

BEARING PEDESTALS SHALL BE STRUCTURAL CONCRETE (3JM).

FOR FOOTING DETAILS, SEE "PIER 4 FOOTING DETAILS" SHEET..

FOR BEARING DETAILS, SEE "BEARING DETAILS 1 & 2" SHEETS.

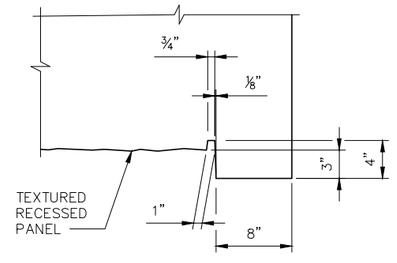

DETAIL 1

NO.	DATE	BY	CHECK	DESIGN	REVISION / SUBMITTAL

DESIGNED BY: NMP | CHECKED BY: DST
DRAWN BY: SGS | CHECKED BY: DST

AECOM

90% SUBMISSION - 01/22/16

METROPOLITAN COUNCIL

SOUTHWEST Green Line LRT Extension

CIVIL - VOLUME 4D
EXCELSIOR BLVD
BRIDGE 27C10
PIER 4 DETAILS

DISCIPLINE: STRUCTURE
SHEET NAME: CBR27C10-BRG-PIR-020

SHEET 49 OF 174

Jan, 18 2016 12:21 pm V:\3400_ADC\CAD\SEGMENT E1\PLAN SHEETS\STRUCTURES\CBR27C10\CBR27C10-BRG-PIR-020.dwg By: hodgesj

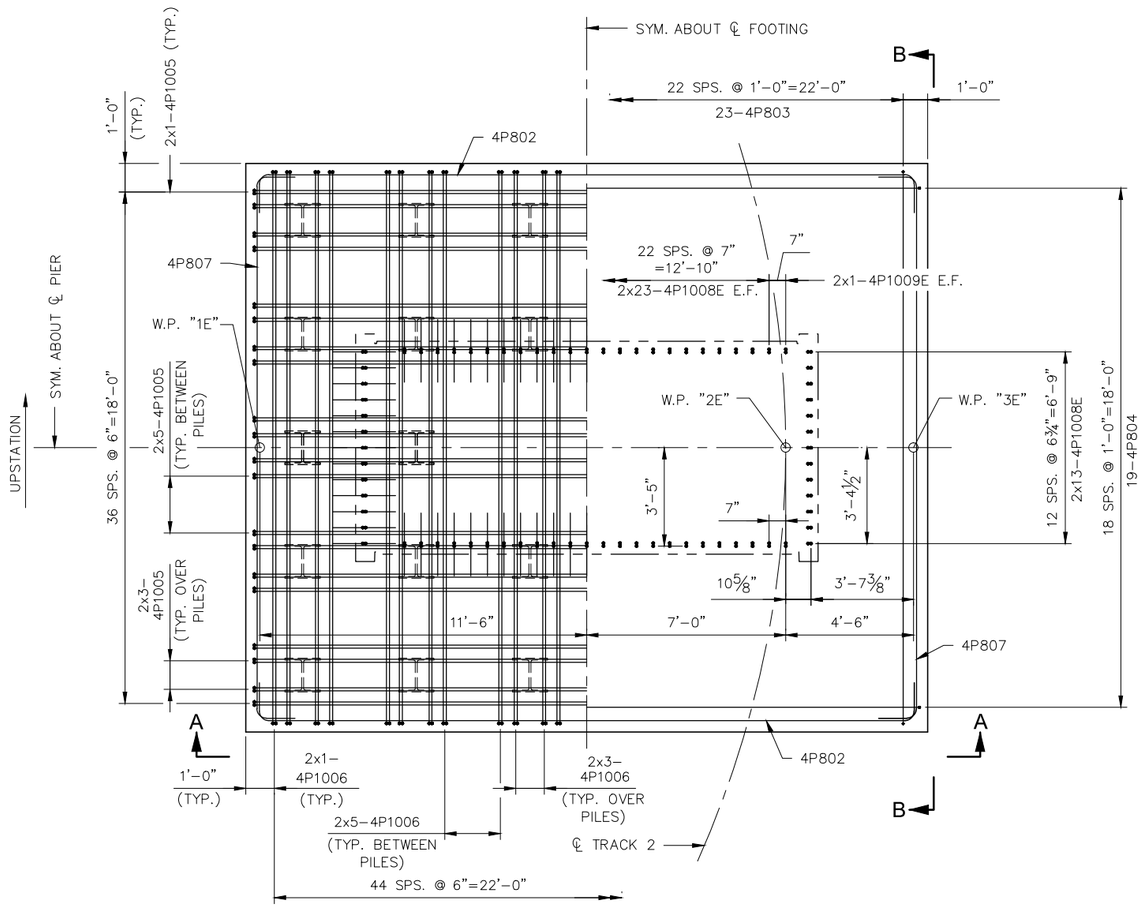

HALF-PLAN BOTTOM

HALF-PLAN TOP

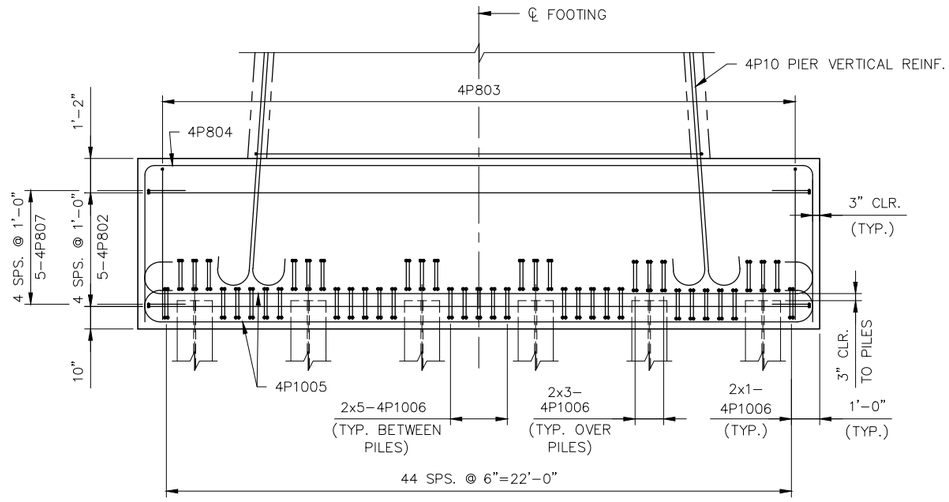

VIEW A-A

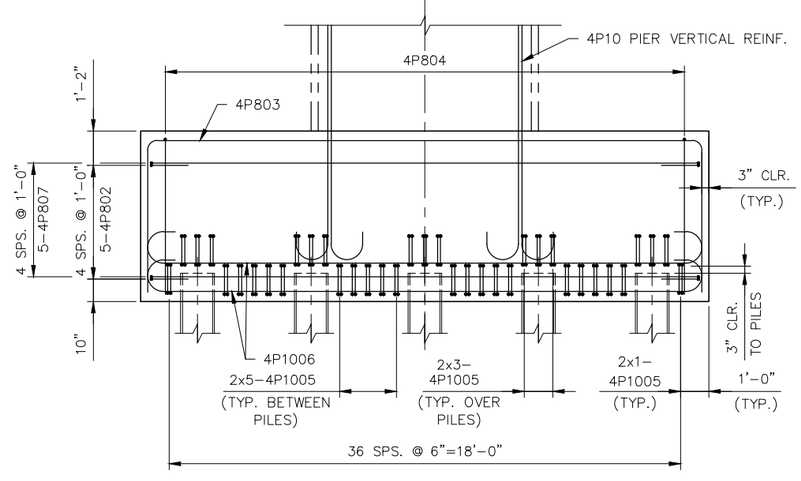

VIEW B-B

NO.	DATE	BY	CHECK	DESIGN	REVISION / SUBMITTAL

DESIGNED BY: NMP | CHECKED BY: DST
DRAWN BY: SGS | CHECKED BY: DST

AECOM

90% SUBMISSION - 01/22/16

METROPOLITAN COUNCIL

SOUTHWEST Green Line LRT Extension

CIVIL - VOLUME 4D
EXCELSIOR BLVD
BRIDGE 27C10
PIER 4 REINFORCEMENT 1

DISCIPLINE: STRUCTURE

SHEET NAME: CBR27C10-BRG-PIR-021

SHEET 50 OF 174

Jan, 18 2016 12:22 pm v:\3400_ADC\CAD\SEGMENT E1\PLAN SHEETS\STRUCTURES\CBR27C10\CBR27C10-BRG-PIR-021.dwg By: hodgesj

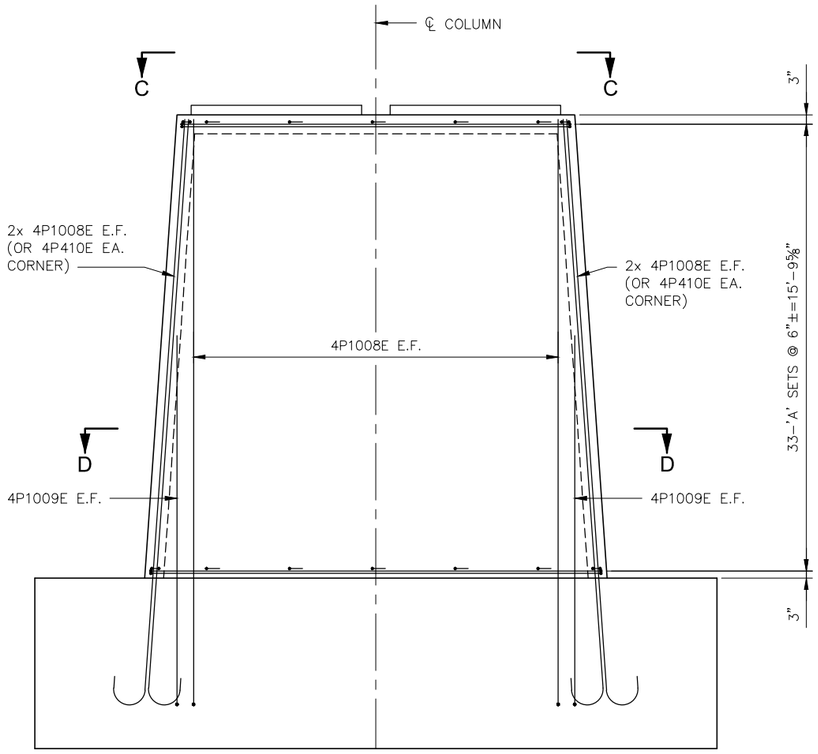

TRANSVERSE ELEVATION

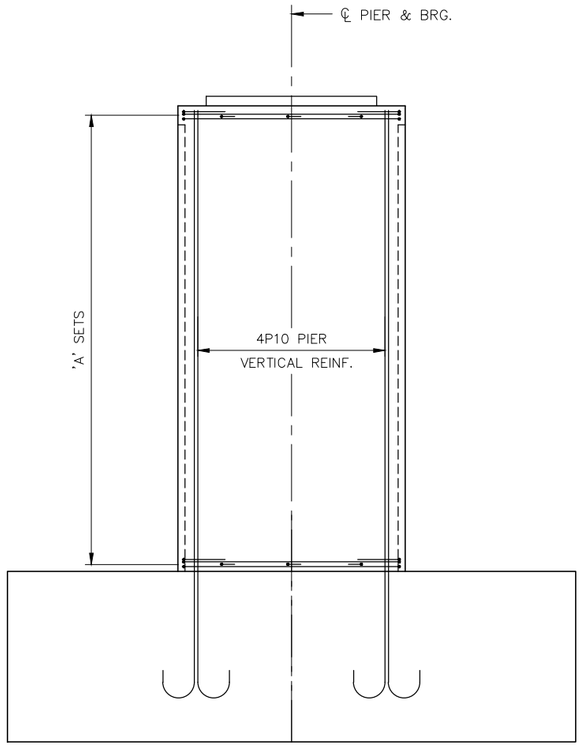

LONGITUDINAL ELEVATION

NO.	DATE	BY	CHECK	DESIGN	REVISION / SUBMITTAL

DESIGNED BY: NMP | CHECKED BY: DST
DRAWN BY: SGS | CHECKED BY: DST

AECOM

90% SUBMISSION - 01/22/16

METROPOLITAN COUNCIL

SOUTHWEST Green Line LRT Extension

CIVIL - VOLUME 4D
EXCELSIOR BLVD
BRIDGE 27C10
PIER 4 REINFORCEMENT 2

DISCIPLINE: STRUCTURE

SHEET NAME: CBR27C10-BRG-PIR-022

SHEET 51 OF 174

Jan, 18 2016 12:23 pm V:\3400_ADC\CAD\SEGMENT E1\PLAN SHEETS\STRUCTURES\CBR27C10\CBR27C10-BRG-PIR-021.dwg By: hodgesj

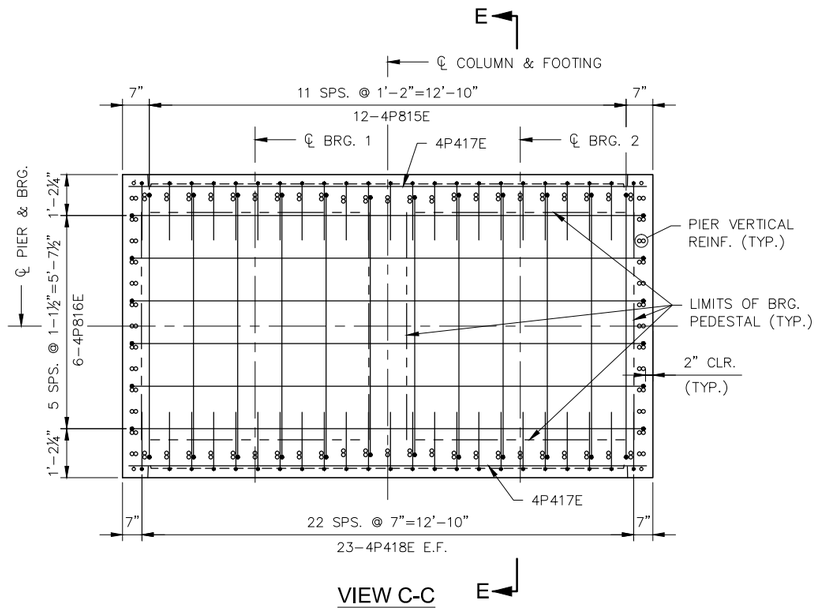

VIEW C-C

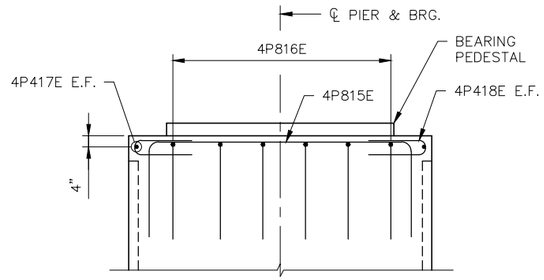

SECTION E-E

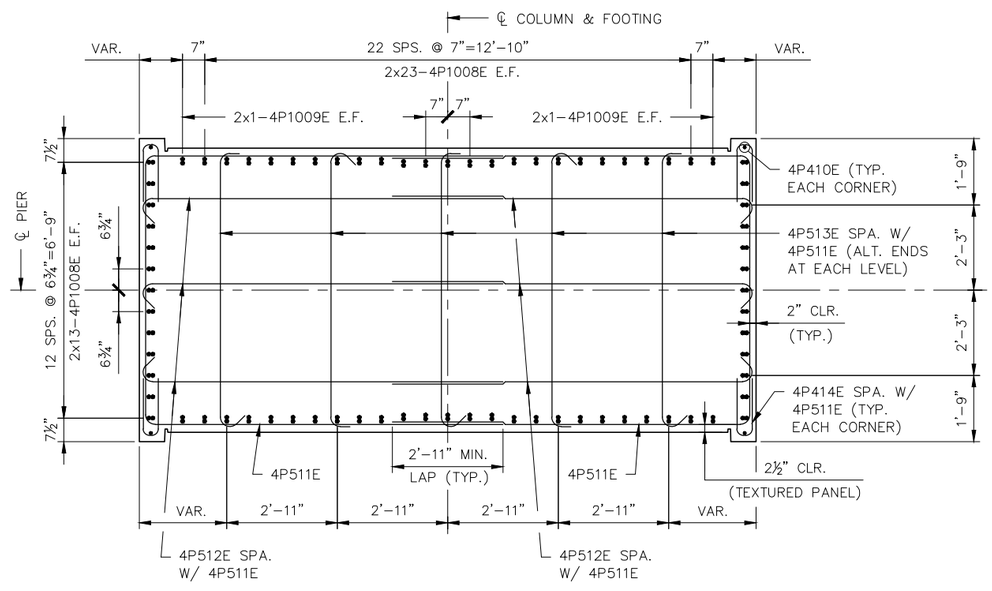

SECTION D-D

NO.	DATE	BY	CHECK	DESIGN	REVISION / SUBMITTAL

DESIGNED BY: NMP CHECKED BY: DST
DRAWN BY: SGS CHECKED BY: DST

AECOM

90% SUBMISSION - 01/22/16

METROPOLITAN COUNCIL

SOUTHWEST Green Line LRT Extension

CIVIL - VOLUME 4D
EXCELSIOR BLVD
BRIDGE 27C10
PIER 4 REINFORCEMENT 3

DISCIPLINE: STRUCTURE

SHEET NAME: CBR27C10-BRG-PIR-023

SHEET 52 OF 174

Jan, 18 2016 12:23 pm V:\3400_ADC\CAD\SEGMENT E1\PLAN SHEETS\STRUCTURES\CBR27C10\CBR27C10-BRG-PIR-021.dwg By: hodgesj

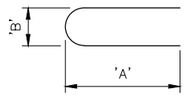

BAR	'A'	'B'
4P414E	1'–6"	4"
4P418E	1'–6"	4"

4P414E, 4P418E

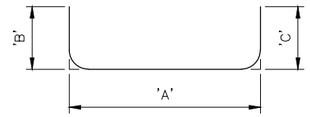

BAR	'A'	'B'	'C'
4P802	23'–3½"	1'–4"	1'–4"
4P803	19'–6"	5'–5"	5'–5"
4P804	23'–6"	5'–6"	5'–6"
4P807	19'–3½"	1'–4"	1'–4"
4P511E	7'–1"	9'–6"	9'–6"
4P815E	6'–11½"	3'–0"	3'–0"
4P816E	13'–6½"	3'–0"	3'–0"

4P802, 4P803, 4P804, 4P807,
4P511E, 4P815E, 4P816E

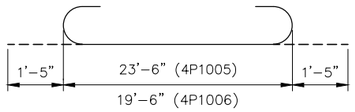

4P1005, 4P1006

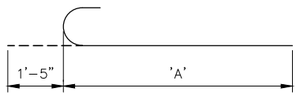

BAR	'A'
4P1008E	20'–8"
4P1009E	13'–1"

4P1008E, 4P1009E

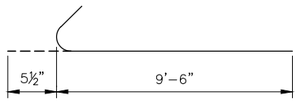

4P512E

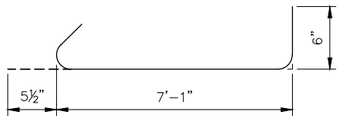

4P513E

BILL OF REINFORCEMENT PIER 4

BAR	NO.	LENGTH	SHAPE	LOCATION
4P802	10	26'–0"		FOOTING SIDE TRANSVERSE
4P803	23	30'–4"		FOOTING TOP LONGITUDINAL
4P804	19	34'–6"		FOOTING TOP TRANSVERSE
4P1005	74	26'–4"		FOOTING BOTTOM TRANSVERSE
4P1006	90	22'–4"		FOOTING BOTTOM LONGITUDINAL
4P807	10	22'–0"		FOOTING SIDE LONGITUDINAL
4P1008E	144	22'–1"		COLUMN VERTICAL
4P1009E	8	14'–6"		COLUMN VERTICAL
4P410E	4	15'–11"		COLUMN VERTICAL
4P511E	66	26'–1"		COLUMN TIE
4P512E	198	10'–0"		COLUMN TIE
4P513E	165	8'–1"		COLUMN TIE
4P414E	132	3'–4"		COLUMN TIE
4P815E	12	13'–0"		COLUMN TOP
4P816E	6	19'–7"		COLUMN TOP
4P417E	2	13'–8"		COLUMN TOP
4P418E	46	3'–4"		COLUMN TOP

NOTES:

'A' SETS CONSIST OF: 2–4P511E, 6–4P512E, 5–4P513E & 4–4P414E

LEGEND

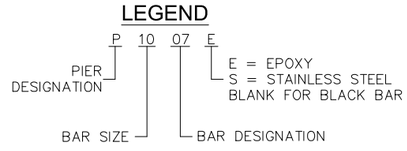

NO.	DATE	BY	CHECK	DESIGN	REVISION / SUBMITTAL

DESIGNED BY: NMP CHECKED BY: DST
DRAWN BY: SGS CHECKED BY: DST

AECOM

90% SUBMISSION - 01/22/16

METROPOLITAN COUNCIL

SOUTHWEST Green Line LRT Extension

CIVIL - VOLUME 4D
EXCELSIOR BLVD
BRIDGE 27C10
PIER 4 REINFORCEMENT 4

DISCIPLINE: STRUCTURE

SHEET NAME: CBR27C10-BRG-PIR-024

SHEET 53 OF 174

Jan, 18 2016 12:23 pm V:\3400_ADC\CAD\SEGMENT E1\PLAN SHEETS\STRUCTURES\CBR27C10\CBR27C10-BRG-PIR-021.dwg By: hodgesj

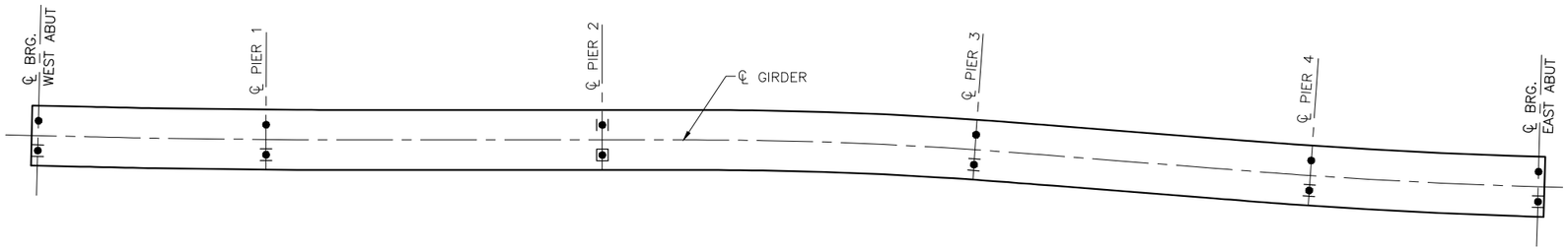

BEARING LOCATION SCHEMATIC

NOTES:

BEARING DETAILS SHOWN ARE FOR ILLUSTRATIVE PURPOSES ONLY. DESIGN OF THE BEARINGS IS THE RESPONSIBILITY OF THE BEARING SUPPLIER. CALCULATIONS AND SHOP DRAWINGS DETAILING THE PROPOSED BEARING DEVICES SHALL BE SUBMITTED TO THE ENGINEER FOR APPROVAL.

BEARING DESIGN, MATERIALS, TESTING AND FABRICATION SHALL BE IN ACCORDANCE WITH THE PROJECT SPECIAL PROVISIONS.

METALIZE THE SOLE AND BEARING PLATES IN ACCORDANCE WITH MnDOT SPEC. 2471.3L2. ALL OTHER METALLIC COMPONENTS SHALL BE GALVANIZED IN ACCORDANCE WITH MnDOT SPEC. 3394.

DESIGN TO ACCOMMODATE THE BEARING MOVEMENTS SHOWN. PROVIDE A SETTING TABLE FOR THE OFFSET BETWEEN THE TOP & SOLE PLATES WITH RESPECT TO THE BEARING PLATE ON THE SHOP DRAWINGS.

DESIGN AND CONSTRUCT THE BEARING ASSEMBLIES TO PERMIT REMOVAL OF THE BEARING ELEMENTS BY JACKING NO MORE THAN ¼" VERTICALLY. SUGGESTED DETAILS ARE SHOWN IN THE SCHEMATICS. THE SUPPLIER MAY PROPOSE ALTERNATIVE REMOVAL DETAILS FOR REVIEW AND APPROVAL BY THE ENGINEER.

① SEE ABUTMENT AND PIER DETAIL SHEETS FOR BEARING PEDESTAL DETAILS. PEDESTALS TO BE GROUND SMOOTH TO A TOLERANCE OF 1/16" AS MEASURED BY A STRAIGHTEDGE SET ACROSS THE PEDESTAL.

② BEARING PADS SHALL BE COTTON–DUCK PADS (CDP) WITH A THICKNESS OF BETWEEN ⅛" AND ⅜". COTTON–DUCK PADS SHALL MEET THE REQUIREMENTS OF THE AASHTO LRFD BRIDGE DESIGN SPECIFICATIONS SECTION 14.7.6.2.

③ THE NUMBER, SIZE, AND LENGTH OF THE ANCHOR BOLTS, BOLTS, SHEAR STUDS, AND THE SIZE OF THE SHEAR RESISTING MECHANISM SHALL BE DETERMINED BY THE BEARING SUPPLIER. CONSIDER THE LOCATION OF THE BOTTOM SLAB TENDONS IN THE END DIAPH. WHEN DETERMINING THE LAYOUT AND DESIGN OF THE SHEAR STUDS ON THE EMBEDDED TOP PLATE FOR THE BEARINGS AT THE ABUTMENTS.

④ THE BEARING HEIGHT ASSUMED FOR DETAILING PURPOSES MEASURED FROM THE BOTTOM SOFFIT OF THE PIER TABLE OR END DIAPHRAGM TO THE TOP OF PIER OR ABUTMENT BRIDGE SEAT INCLUSIVE OF ALL PLATES, DISC ELEMENT, PLINTH, AND PEDESTAL IS 1'–6". DIFFERENCES IN THE SUPPLIED BEARING HEIGHTS CAN BE ACCOMMODATED BY ADJUSTING THE TOP OF PIER OR ABUTMENT BRIDGE SEAT ELEVATIONS. FINAL ELEVATIONS SHALL BE REVIEWED AND APPROVED BY THE ENGINEER. ANY REQUIRED ADJUSTMENT OF THE TOP OF PIER OR ABUTMENT BRIDGE SEAT ELEVATIONS SHALL BE MADE AT NO ADDITIONAL COST TO THE OWNER. THE ELEVATION AT THE BOTTOM SOFFIT OF THE SUPERSTRUCTURE SHALL NOT CHANGE.

⑤ LOADS AND MOVEMENTS ARE PER THE AASHTO LRFD BRIDGE DESIGN SPECIFICATIONS AND PROJECT SPECIFIC LOAD COMBINATIONS.

⑥ THE PLATE DIMENSIONS GIVEN ARE THE MAXIMUM PERMISSIBLE TO ALLOW THE BEARINGS TO FIT WITHIN THE CONCRETE DIMENSIONS SHOWN IN THE PLANS.

⑦ TOTAL CONTRACTION AND EXPANSION MOVEMENTS INCLUDE 1.25 FACTOR FOR CREEP & SHRINKAGE AND 1.2 FACTOR FOR TEMPERATURE PER THE AASHTO LRFD BRIDGE DESIGN SPECIFICATIONS.

⑧ INITIAL AND END OF CONSTRUCTION (E.O.C.) OFFSETS ARE GIVEN FOR 45°F STRUCTURE TEMPERATURE. ADJUST BY CORRECTION SHOWN FOR TEMPERATURES OTHER THAN 45°F. CORRECTION FOR A RISE IN TEMPERATURE IS SHOWN AND CORRECTION FOR A DROP IN TEMPERATURE IS THE NEGATIVE OF THE VALUE SHOWN. INITIAL OFFSET SHOWN IS INCLUDED FOR INFORMATION ONLY AND IS BASED ON ASSUMPTIONS MADE BY THE DESIGNER IN DESIGNING THE STRUCTURE. THE CONTRACTOR SHALL DETERMINE THE REQUIRED INITIAL OFFSET TO ACHIEVE THE E.O.C. OFFSET SHOWN BASED UPON THE ERECTION SEQUENCE PROPOSED BY THE CONTRACTOR.

⑨ THE BEARINGS ARE TO BE SET LEVEL. LONGITUDINAL GRADE IS GIVEN AS INFORMATION ONLY TO FACILITATE FORMING OF THE PLINTHS.

LEGEND

- ◘ FIXED BEARING
- ◒ GUIDED EXPANSION BEARING
- ● NON–GUIDED EXPANSION BEARING

NO.	DATE	BY	CHECK	DESIGN	REVISION / SUBMITTAL

DESIGNED BY: ETN CHECKED BY: JWJ
DRAWN BY: TMW CHECKED BY: JWJ

AECOM

90% SUBMISSION - 01/22/16

METROPOLITAN COUNCIL

SOUTHWEST Green Line LRT Extension

CIVIL - VOLUME 4D
EXCELSIOR BLVD
BRIDGE 27C10
BEARING DETAILS 1

DISCIPLINE: STRUCTURE
SHEET NAME: CBR27C10-BRG-PIR-025

SHEET 54 OF 174

Jan, 15 2016 01:52 pm C:\Users\HodgesJ\appdata\local\temp\AcPublish_8972\CBR27C10-BRG-PIR-025.dwg By: hodgesj

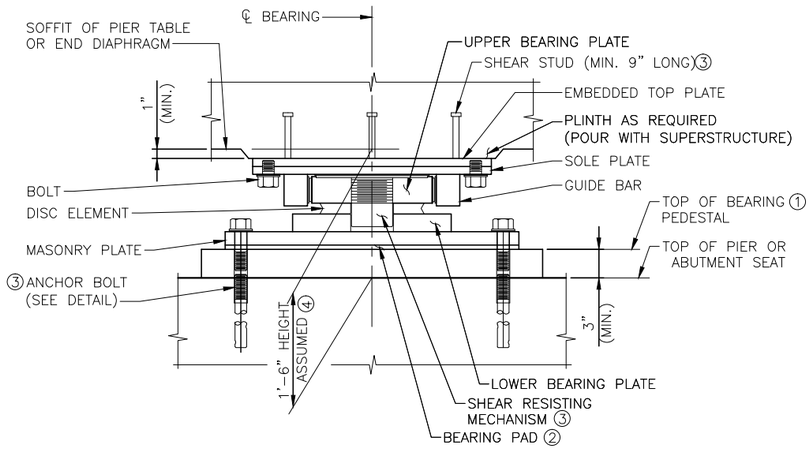

SECTION

SCHEMATIC BEARING DETAIL

(LONGITUDINALLY GUIDED EXPANSION BEARING SHOWN, OTHERS SIMILAR)

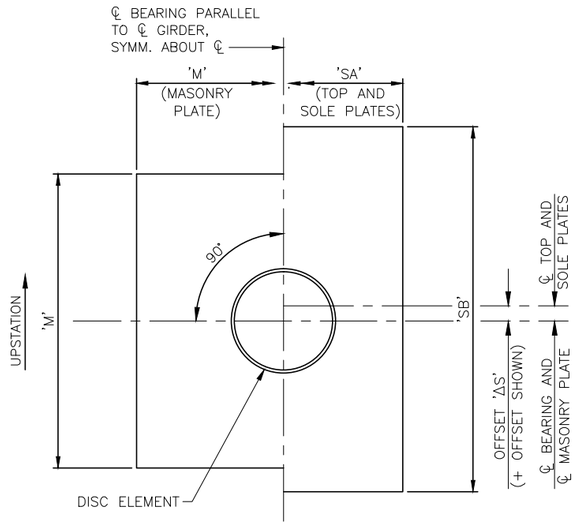

PLAN

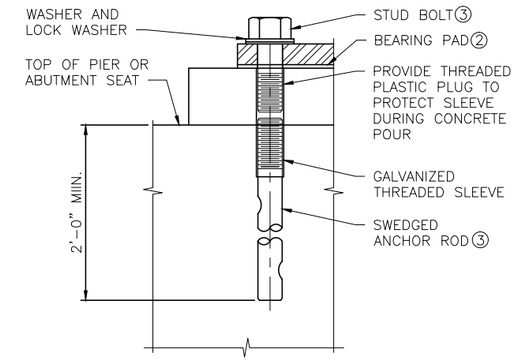

ANCHOR BOLT DETAIL

NOTES:

'F' DENOTES FIXED BEARING
'GEL' DENOTES LONGITUDINALLY GUIDED EXPANSION BEARING
'GET' DENOTES TRANSVERSELY GUIDED EXPANSION BEARING
'NE' DENOTES NON-GUIDED EXPANSION BEARING

WORK THIS SHEET WITH "BEARING DETAILS 1" SHEET.

BEARING SCHEDULE

LOCATION	BEARING	TYPE	SERVICE LIMIT STATE ⑤			STRENGTH LIMIT STATE ⑤					EXTREME LIMIT STATE ⑤			MAXIMUM PERMISSIBLE PLATE DIMENSIONS ⑥			BEARING MOVEMENT (INCHES) (+ DENOTES UPSTATION MOVEMENT) ⑦			BRG. PLACEMENT & TEMPERATURE ADJUSTMENTS (INCHES) ⑧			LONGITUDINAL GRADE (+ = POSITIVE UPSTATION GRADE) ⑨
			VERTICAL DESIGN LOAD (KIPS)		HORIZONTAL DESIGN LOAD (KIPS)	VERTICAL DESIGN LOAD (KIPS)		HORIZONTAL DESIGN LOAD (KIPS)	AASHTO 14.7.8.4 HORIZ. LOAD (KIPS)	AASHTO 14.7.9.2 HORIZ. LOAD (KIPS)	ROTATION DESIGN CAPACITY (RADIANS)	VERTICAL DESIGN LOAD (KIPS)		HORIZONTAL DESIGN LOAD (KIPS)				LONGITUDINAL		TRANSVERSE	INITIAL OFFSET 'ΔS' AT 45°F	E.O.C. OFFSET 'ΔS' AT 45°F	OFFSET CORRECTION (PER +10°F)	
			MIN.	MAX.		MIN.	MAX.					MIN.	MAX.		'M'	'SA'	'SB'	TOTAL CONTRACTION	TOTAL EXPANSION					
WEST ABUTMENT	LEFT	NE	310	1050	–	400	1310	–	160	–	0.03	400	1110	–	3'–0"	2'–3"	3'–6"	+8.1	–4.7	1.0	–6.1	–1.7	–0.43	+0.0500
	RIGHT	GEL	280	1010	100	360	1260	120	160	250	0.03	360	1100	180	3'–0"	2'–3"	3'–6"	+8.1	–4.7	–	–6.1	–1.7	–0.43	+0.0500
PIER 1	LEFT	NE	2720	4140	–	2590	5190	–	630	–	0.02	2620	4770	–	5'–0"	5'–0"	5'–0"	+5.0	–2.6	1.0	–3.6	–1.2	–0.26	+0.0500
	RIGHT	GEL	2250	3540	200	2170	4450	340	540	1050	0.02	2170	4090	890	5'–0"	5'–0"	5'–0"	+5.0	–2.6	–	–3.6	–1.2	–0.26	+0.0500
PIER 2	LEFT	GET	3070	4640	580	3000	5820	740	740	740	0.02	3030	5310	530	5'–6"	5'–6"	5'–6"	–	–	1.0	–	–	–	+0.0252
	RIGHT	F	2740	4340	460	2700	5420	670	670	1200	0.02	2730	4860	1050	5'–6"	5'–6"	5'–6"	–	–	–	–	–	–	+0.0252
PIER 3	LEFT	NE	2290	4140	–	2370	5330	–	630	–	0.02	2450	4530	–	5'–6"	5'–6"	5'–6"	–2.7	+1.8	1.0	+3.1	+0.5	+0.29	–0.0075
	RIGHT	GEL	3150	5150	350	3150	6570	570	780	1200	0.02	3230	5670	1050	5'–6"	5'–6"	5'–6"	–2.7	+1.8	–	+3.1	+0.5	+0.29	–0.0075
PIER 4	LEFT	NE	2890	4200	–	2690	5260	–	630	–	0.02	2730	4910	–	5'–0"	5'–0"	5'–0"	–6.5	+4.0	1.0	+5.8	+1.3	+0.55	–0.0371
	RIGHT	GEL	2240	3360	230	2120	4220	360	510	1050	0.02	2120	3950	900	5'–0"	5'–0"	5'–0"	–6.5	+4.0	–	+5.8	+1.3	+0.55	–0.0371
EAST ABUTMENT	LEFT	NE	230	1060	–	330	1310	–	160	–	0.03	360	1070	–	3'–0"	2'–3"	3'–6"	–9.2	+5.7	1.0	+8.2	+1.8	+0.68	–0.0500
	RIGHT	GEL	240	1080	130	330	1340	140	170	240	0.03	370	1130	180	3'–0"	2'–3"	3'–6"	–9.2	+5.7	–	+8.2	+1.8	+0.68	–0.0500

NO.	DATE	BY	CHECK	DESIGN	REVISION / SUBMITTAL

DESIGNED BY: ETN CHECKED BY: JWJ
DRAWN BY: TMW CHECKED BY: JWJ

AECOM

90% SUBMISSION - 01/22/16

METROPOLITAN COUNCIL

SOUTHWEST Green Line LRT Extension

CIVIL - VOLUME 4D
EXCELSIOR BLVD
BRIDGE 27C10
BEARING DETAILS 2

DISCIPLINE: STRUCTURE
SHEET NAME: CBR27C10-BRG-PIR-026

SHEET 55 OF 174

Jan, 15 2016 01:54 pm V:\3400_ADC\CAD\SEGMENT E1\PLAN SHEETS\STRUCTURES\CBR27C10\CBR27C10-BRG-PIR-026.dwg By: hodgesj

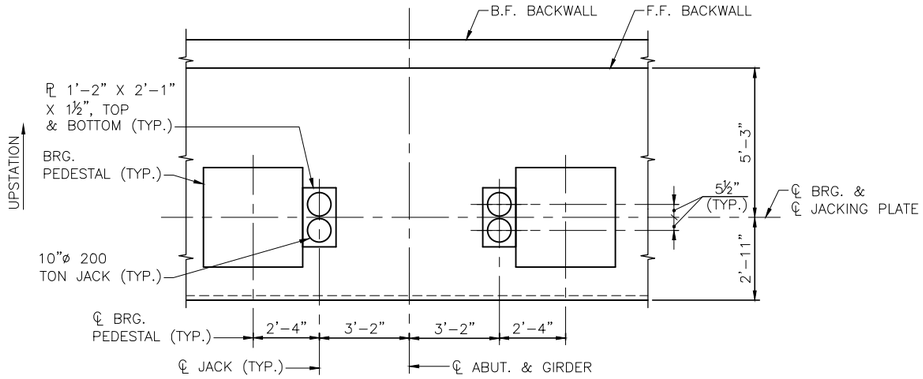

PARTIAL PLAN - ABUTMENTS
(EAST ABUTMENT SHOWN, WEST ABUTMENT SIMILAR)

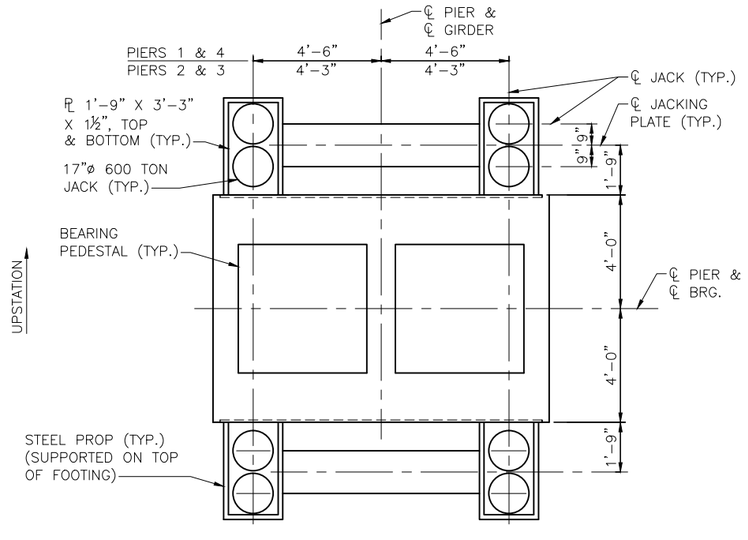

PARTIAL PLAN - PIERS
(PIER 1 SHOWN, OTHER PIERS SIMILAR)

NOTES:

THIS SHEET IS PROVIDED FOR FUTURE BEARING MAINTENANCE NEEDS.

ALL BEARING COMPONENTS EXCEPT THE EMBEDDED TOP PLATE CAN BE REPLACED BY JACKING THE BRIDGE A MAXIMUM OF ¼".

JACKS SHALL BE PLACED ON STEEL PLATES WITH MINIMUM DIMENSIONS SHOWN. BEVELED STEEL PLATES SHALL BE USED TO PROVIDE A LEVEL BEARING SURFACE.

DURING BEARING REPLACEMENT, NO LIVE LOAD SHALL BE ALLOWED ON THE BRIDGE, THE TEMPERATURE SHALL BE ABOVE 0°F AND THE WIND SPEED SHALL BE LESS THAN 30 MPH.

BEARING REPLACEMENT PROCEDURE:

1. NO LIVE LOAD ALLOWED ON BRIDGE DURING BEARING REPLACEMENT.
2. UNCLIP RAILS A MINIMUM DISTANCE OF 20 FEET ON BOTH SIDES OF BEARINGS TO BE REPLACED.
3. PLACE TEMPORARY JACKS UNDER THE BOX GIRDER LOCATIONS AS SHOWN. JACKS SHALL HAVE A MINIMUM CAPACITY AS SHOWN AND ENGAGED USING A COMMON MANIFOLD. ALL JACKS AT EACH ABUTMENT OR PIER SHALL BE RAISED AND LOWERED SIMULTANEOUSLY TO RAISE OR LOWER THE BOX GIRDER.
4. JACKING SHALL CONTINUE UNTIL BEARINGS CAN BE FREED, BUT THE CLEAR SPACE BETWEEN THE SOLE PLATE AND UPPER BEARING PLATE SHALL NOT EXCEED ¼".
5. JACKS SHALL BE EQUIPPED WITH LOCKING COLLARS AND SHALL BE LOCKED OFF PRIOR TO BEARING REMOVAL.
6. REMOVE BOLTS FROM THE BEARING PLATES.
7. INSPECT BEARING PLATE SURFACES AND REPAIR IF REQUIRED. CLEAN PLATE SURFACES AND INSTALL NEW BEARING COMPONENTS.
8. LOOSELY INSTALL NEW BOLTS.
9. LOWER TEMPORARY JACKS UNTIL THE BOX GIRDER IS PROPERLY SEATED ON THE NEW BEARINGS.
10. TIGHTEN ALL BOLTS.
11. REATTACH RAILS TO PREVIOUSLY SPECIFIED CONDITIONS.

DESIGN JACKING LOADS (TONS)		
LOCATION	LEFT BRG.	RIGHT BRG.
WEST ABUT.	295	285
PIER 1	1605	1355
PIER 2	1825	1665
PIER 3	1525	1950
PIER 4.	1660	1315
EAST ABUT.	275	300

NO.	DATE	BY	CHECK	DESIGN	REVISION / SUBMITTAL

DESIGNED BY: ETN CHECKED BY: JWJ
DRAWN BY: TMW CHECKED BY: JWJ

AECOM

90% SUBMISSION - 01/22/16

METROPOLITAN COUNCIL

SOUTHWEST Green Line LRT Extension

CIVIL - VOLUME 4D
EXCELSIOR BLVD
BRIDGE 27C10
BEARING REPLACEMENT DETAILS

DISCIPLINE: STRUCTURE
SHEET NAME: CBR27C10-BRG-PIR-027

SHEET 56 OF 174

Jan, 15 2016 01:56 pm v:\3400_ADC\CAD\SEGMENT E1\PLAN SHEETS\STRUCTURES\CBR27C10\CBR27C10-BRG-PIR-027.dwg By: hodgesj

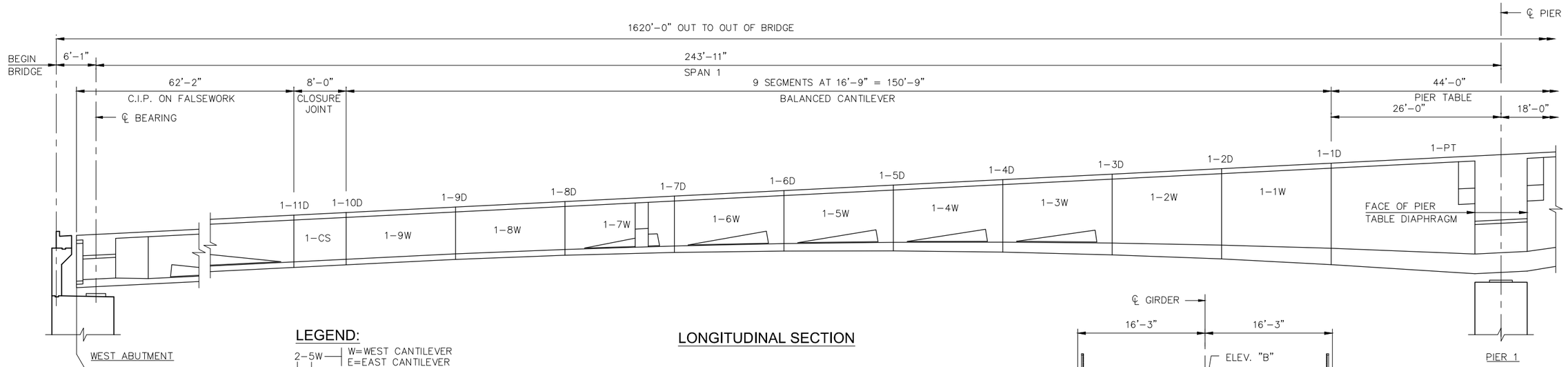

LONGITUDINAL SECTION

LEGEND:

2–5W — W=WEST CANTILEVER, E=EAST CANTILEVER; SEGMENT NUMBER; PIER NUMBER

2–CS — CLOSURE SEGMENT; SPAN NUMBER

2–PT — PIER TABLE; PIER NUMBER

2–5D — D=DOWNSTATION OF PIER, U=UPSTATION OF PIER; JOINT NUMBER; PIER NUMBER

NOTES:

SPAN AND SEGMENT LENGTHS SHOWN ARE HORIZONTAL PROJECTIONS ALONG ℄ TRACK 2.

FOR ADDITIONAL SEGMENT GEOMETRY INFORMATION, SEE "TREATMENT OF HORIZONTAL CURVATURE" SHEET.

SEGMENT NUMBER DESIGNATES SEGMENT ORDER DURING BALANCED CANTILEVER CONSTRUCTION.

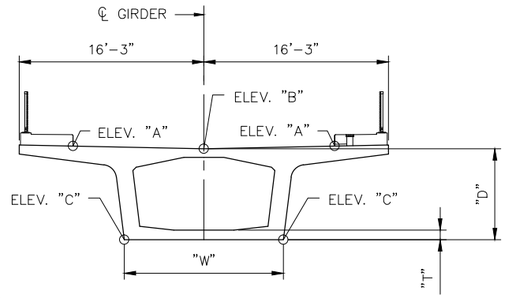

TYPICAL SECTION

JOINT NUMBER		1–11D	1–10D	1–9D	1–8D	1–7D	1–6D	1–5D	1–4D	1–3D	1–2D	1–1D	℄ PIER
DISTANCE FROM ℄ PIER	246'–11"	184'–9"	176'–9"	160'–0"	143'–3"	126'–6"	109'–9"	93'–0"	76'–3"	59'–6"	42'–9"	26'–0"	4'–0"	0'–0"
ELEVATION "A"	935.90	939.01	939.41	940.25	941.09	941.92	942.76	943.60	944.44	945.28	946.11	946.95	948.05	948.25
ELEVATION "B"	935.67	938.78	939.18	940.02	940.86	941.69	942.53	943.37	944.21	945.05	945.88	946.72	947.82	948.02
ELEVATION "C"	927.67	930.78	931.18	931.99	932.63	933.06	933.28	933.31	933.10	932.70	932.06	931.21	929.82	930.02
GIRDER DEPTH "D"	8'–0"	8'–0"	8'–0"	8'–0⅜"	8'–2¾"	8'–7⅝"	9'–3"	10'–0¾"	11'–1¼"	12'–4⅛"	13'–9⅞"	15'–6⅛"	18'–0"	18'–0"
BOTTOM SLAB THICKNESS "T"	10"	10"	10"	10⅛"	10⅝"	11¾"	1'–1½"	1'–3¾"	1'–6½"	1'–9¾"	2'–1½"	2'–5⅞"	3'–0"	3'–0"
BOTTOM SLAB WIDTH "W"	14'–0"	14'–0"	14'–0"	13'–11⅞"	13'–11⅜"	13'–10⅛"	13'–8¼"	13'–5⅞"	13'–2¾"	12'–11"	12'–6½"	12'–1½"	11'–6"	11'–6"

NO.	DATE	BY	CHECK	DESIGN	REVISION / SUBMITTAL

DESIGNED BY: ETN — CHECKED BY: JWJ

DRAWN BY: JWH — CHECKED BY: JWJ

AECOM

90% SUBMISSION - 01/22/16

METROPOLITAN COUNCIL

SOUTHWEST Green Line LRT Extension

CIVIL - VOLUME 4D
EXCELSIOR BLVD
BRIDGE 27C10
SEGMENT DESIGNATION 1

DISCIPLINE: STRUCTURE

SHEET NAME: CBR27C10-BRG-SUP-001

SHEET 57 OF 174

Jan, 15 2016 01:57 pm V:\3400_ADC\CAD\SEGMENT E1\PLAN SHEETS\STRUCTURES\CBR27C10\CBR27C10-BRG-SUP-001.dwg By: hodgesj

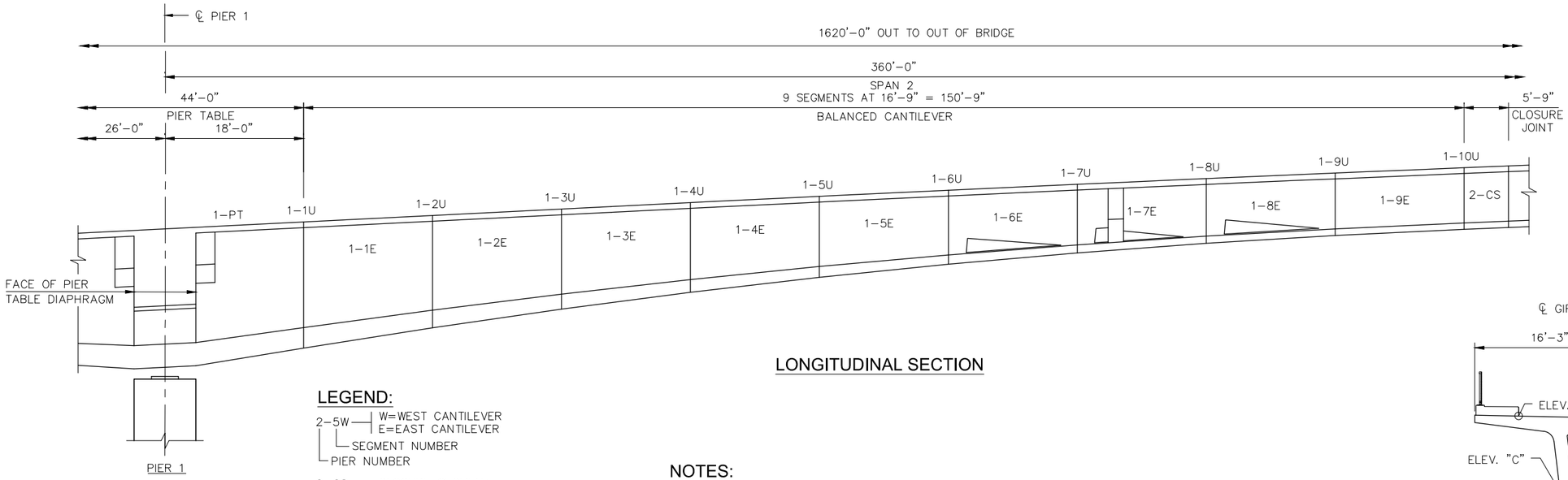

LONGITUDINAL SECTION

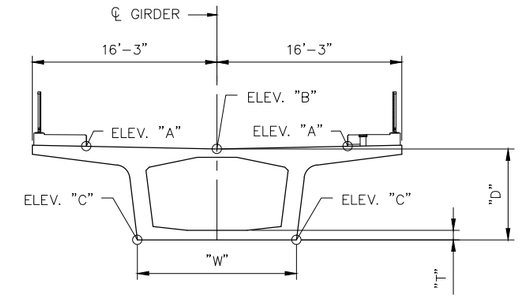

TYPICAL SECTION

LEGEND:

- 2–5W — W=WEST CANTILEVER, E=EAST CANTILEVER
  - SEGMENT NUMBER
  - PIER NUMBER
- 2–CS — CLOSURE SEGMENT
  - SPAN NUMBER
- 2–PT — PIER TABLE
  - PIER NUMBER
- 2–5D — D=DOWNSTATION OF PIER, U=UPSTATION OF PIER
  - JOINT NUMBER
  - PIER NUMBER

NOTES:

SPAN AND SEGMENT LENGTHS SHOWN ARE HORIZONTAL PROJECTIONS ALONG ℄ TRACK 2.

FOR ADDITIONAL SEGMENT GEOMETRY INFORMATION, SEE "TREATMENT OF HORIZONTAL CURVATURE" SHEET.

SEGMENT NUMBER DESIGNATES SEGMENT ORDER DURING BALANCED CANTILEVER CONSTRUCTION.

JOINT NUMBER		1–1U	1–2U	1–3U	1–4U	1–5U	1–6U	1–7U	1–8U	1–9U	1–10U
DISTANCE FROM ℄ PIER	4'–0"	18'–0"	34'–9"	51'–6"	68'–3"	85'–0"	101'–9"	118'–6"	135'–3"	152'–0"	168'–9"
ELEVATION "A"	948.45	949.15	949.99	950.82	951.66	952.47	953.26	954.02	954.77	955.49	956.18
ELEVATION "B"	948.22	948.92	949.76	950.59	951.43	952.24	953.03	953.79	954.54	955.26	955.95
ELEVATION "C"	930.22	932.52	935.16	937.57	939.76	941.71	943.41	944.89	946.14	947.15	947.95
GIRDER DEPTH "D"	18'–0"	16'–4¾"	14'–7⅞"	13'–0¼"	11'–8"	10'–6⅜"	9'–7⅜"	8'–10⅞"	8'–4¾"	8'–1¼"	8'–0"
BOTTOM SLAB THICKNESS "T"	3'–0"	2'–8"	2'–3½"	1'–11½"	1'–8"	1'–5"	1'–2½"	1'–0½"	11⅛"	10¼"	10"
BOTTOM SLAB WIDTH "W"	11'–6"	11'–10⅞"	12'–4¼"	12'–9"	13'–1"	13'–4⅜"	13'–7⅛"	13'–9¼"	13'–10⅞"	13'–11⅝"	14'–0"

NO.	DATE	BY	CHECK	DESIGN	REVISION / SUBMITTAL

DESIGNED BY: ETN CHECKED BY: JWJ
DRAWN BY: JWH CHECKED BY: JWJ

AECOM

90% SUBMISSION - 01/22/16

METROPOLITAN COUNCIL

SOUTHWEST Green Line LRT Extension

CIVIL - VOLUME 4D
EXCELSIOR BLVD
BRIDGE 27C10
SEGMENT DESIGNATION 2

DISCIPLINE: STRUCTURE
SHEET NAME: CBR27C10-BRG-SUP-002

SHEET 58 OF 174

Jan, 15 2016 02:00 pm V:\3400_ADC\CAD\SEGMENT E1\PLAN SHEETS\STRUCTURES\CBR27C10\CBR27C10-BRG-SUP-002.dwg By: hodgesj

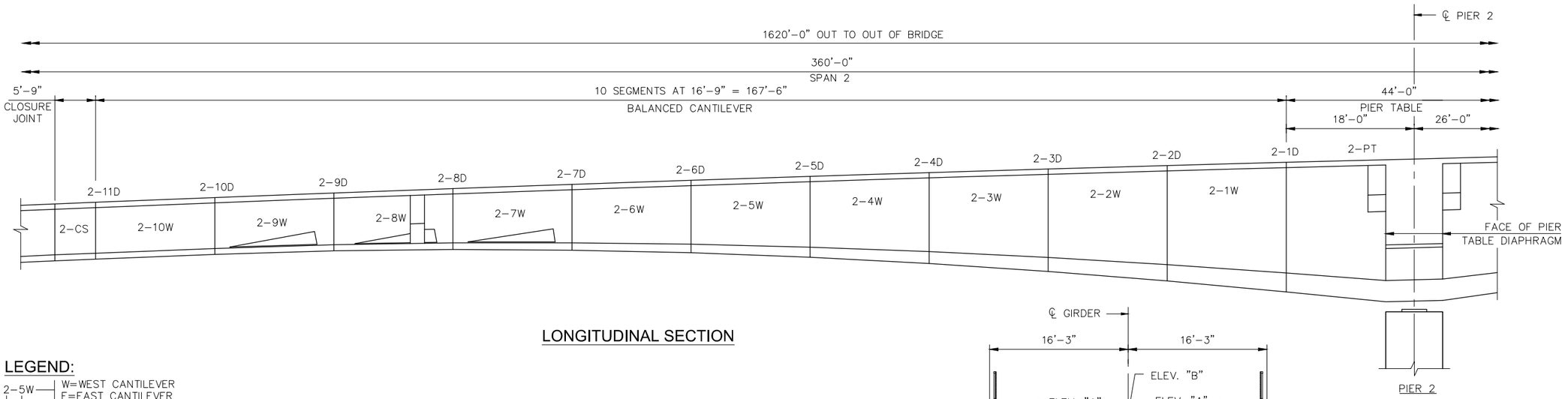

LONGITUDINAL SECTION

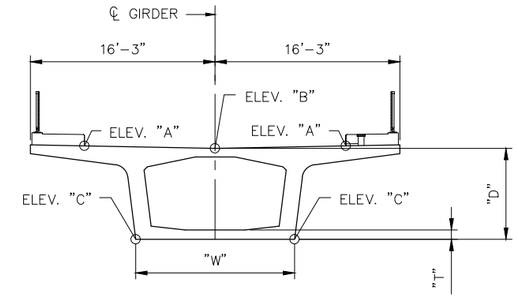

TYPICAL SECTION

LEGEND:

2–5W — W=WEST CANTILEVER, E=EAST CANTILEVER
- SEGMENT NUMBER
- PIER NUMBER

2–CS — CLOSURE SEGMENT
- SPAN NUMBER

2–PT — PIER TABLE
- PIER NUMBER

2–5D — D=DOWNSTATION OF PIER, U=UPSTATION OF PIER
- JOINT NUMBER
- PIER NUMBER

NOTES:

SPAN AND SEGMENT LENGTHS SHOWN ARE HORIZONTAL PROJECTIONS ALONG ℄ TRACK 2.

FOR ADDITIONAL SEGMENT GEOMETRY INFORMATION, SEE "TREATMENT OF HORIZONTAL CURVATURE" SHEET.

SEGMENT NUMBER DESIGNATES SEGMENT ORDER DURING BALANCED CANTILEVER CONSTRUCTION.

JOINT NUMBER	2–11D	2–10D	2–9D	2–8D	2–7D	2–6D	2–5D	2–4D	2–3D	2–2D	2–1D	℄ PIER
DISTANCE FROM ℄ PIER	185'–6"	168'–9"	152'–0"	135'–3"	118'–6"	101'–9"	85'–0"	68'–3"	51'–6"	34'–9"	18'–0"	0'–0"
ELEVATION "A"	956.42	957.08	957.73	958.35	958.94	959.52	960.07	960.60	961.10	961.59	962.04	962.51
ELEVATION "B"	956.19	956.85	957.50	958.12	958.71	959.29	959.84	960.37	960.87	961.36	961.81	962.28
ELEVATION "C"	948.19	948.85	949.35	949.54	949.44	949.08	948.45	947.58	946.47	945.13	943.57	942.28
GIRDER DEPTH "D"	8'–0"	8'–0"	8'–1¾"	8'–6⅞"	9'–3¾"	10'–2½"	11'–4⅝"	12'–9½"	14'–4⅞"	16'–2¾"	18'–2⅞"	20'–0"
BOTTOM SLAB THICKNESS "T"	10"	10"	10¼"	11⅛"	1'–0½"	1'–2½"	1'–5"	1'–8"	1'–11½"	2'–3½"	2'–8"	3'–0"
BOTTOM SLAB WIDTH "W"	14'–0"	14'–0"	13'–11⅝"	13'–10¼"	13'–8¼"	13'–5⅜"	13'–1⅞"	12'–9⅝"	12'–4¾"	11'–11⅜"	11'–5¼"	11'–0"

NO.	DATE	BY	CHECK	DESIGN	REVISION / SUBMITTAL

DESIGNED BY: ETN CHECKED BY: JWJ
DRAWN BY: JWH CHECKED BY: JWJ

AECOM

90% SUBMISSION - 01/22/16

METROPOLITAN COUNCIL

SOUTHWEST Green Line LRT Extension

CIVIL - VOLUME 4D
EXCELSIOR BLVD
BRIDGE 27C10
SEGMENT DESIGNATION 3

DISCIPLINE: STRUCTURE
SHEET NAME: CBR27C10-BRG-SUP-003

SHEET 59 OF 174

Jan, 15 2016 02:03 pm V:\3400_ADC\CAD\SEGMENT E1\PLAN SHEETS\STRUCTURES\CBR27C10\CBR27C10-BRG-SUP-003.dwg By: hodgesj

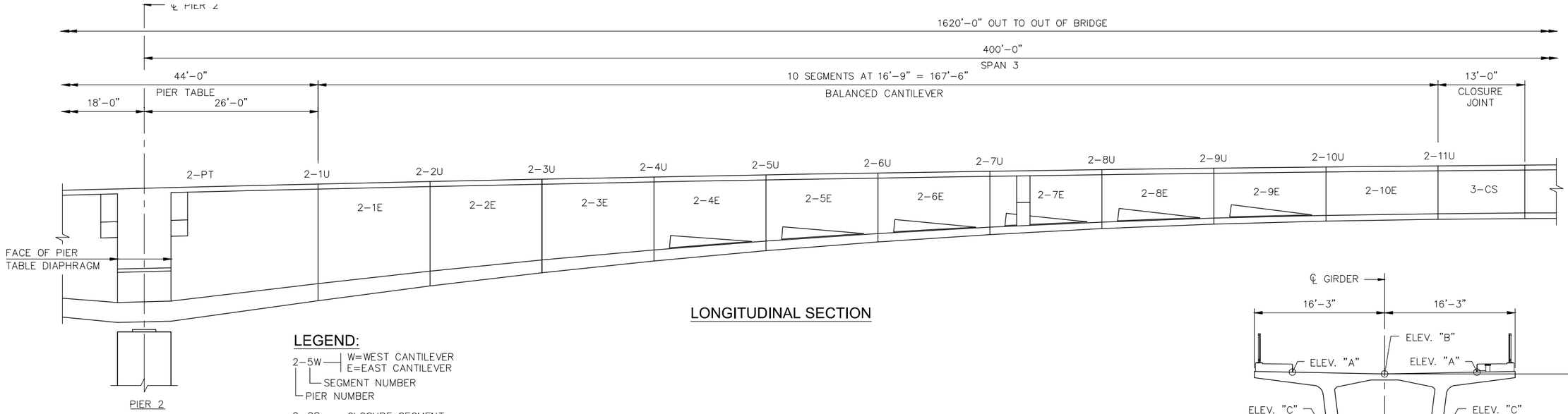

LONGITUDINAL SECTION

LEGEND:

- 2–5W — W=WEST CANTILEVER, E=EAST CANTILEVER; 5 = SEGMENT NUMBER; 2 = PIER NUMBER
- 2–CS — CLOSURE SEGMENT; CS = SPAN NUMBER
- 2–PT — PIER TABLE; 2 = PIER NUMBER
- 2–5D — D=DOWNSTATION OF PIER, U=UPSTATION OF PIER; 5 = JOINT NUMBER; 2 = PIER NUMBER

NOTES:

SPAN AND SEGMENT LENGTHS SHOWN ARE HORIZONTAL PROJECTIONS ALONG ℄ TRACK 2.

FOR ADDITIONAL SEGMENT GEOMETRY INFORMATION, SEE "TREATMENT OF HORIZONTAL CURVATURE" SHEET.

SEGMENT NUMBER DESIGNATES SEGMENT ORDER DURING BALANCED CANTILEVER CONSTRUCTION.

TYPICAL SECTION

JOINT NUMBER		2–1U	2–2U	2–3U	2–4U	2–5U	2–6U	2–7U	2–8U	2–9U	2–10U	2–11U
DISTANCE FROM ℄ PIER	4'–0"	26'–0"	42'–9"	59'–6"	76'–3"	93'–0"	109'–9"	126'–6"	143'–3"	160'–0"	176'–9"	193'–6"
ELEVATION "A"	962.61	963.14	963.52	963.87	964.20	964.51	964.79	965.05	965.29	965.50	965.69	965.86
ELEVATION "B"	962.38	962.91	963.29	963.64	963.97	964.28	964.56	964.82	965.06	965.27	965.46	965.63
ELEVATION "C"	942.38	945.45	947.66	949.64	951.40	952.93	954.25	955.35	956.23	956.91	957.37	957.63
GIRDER DEPTH "D"	20'–0"	17'–5½"	15'–7½"	14'–0"	12'–6⅞"	11'–4⅛"	10'–3¾"	9'–5⅜"	8'–9⅛"	8'–4⅜"	8'–1⅛"	8'–0"
BOTTOM SLAB THICKNESS "T"	3'–0"	2'–6½"	2'–2½"	1'–11"	1'–7⅞"	1'–5¼"	1'–3"	1'–1¼"	11¾"	10¾"	10¼"	10"
BOTTOM SLAB WIDTH "W"	11'–0"	11'–7⅝"	12'–1⅛"	12'–6"	12'–10¼"	13'–2"	13'–5⅛"	13'–7⅝"	13'–9½"	13'–10⅞"	13'–11¾"	14'–0"

NO.	DATE	BY	CHECK	DESIGN	REVISION / SUBMITTAL

DESIGNED BY: ETN CHECKED BY: JWJ
DRAWN BY: JWH CHECKED BY: JWJ

AECOM

90% SUBMISSION - 01/22/16

METROPOLITAN COUNCIL

SOUTHWEST Green Line LRT Extension

CIVIL - VOLUME 4D
EXCELSIOR BLVD
BRIDGE 27C10
SEGMENT DESIGNATION 4

DISCIPLINE: STRUCTURE
SHEET NAME: CBR27C10-BRG-SUP-004

SHEET 60 OF 174

Jan, 15 2016 02:05 pm V:\3400_ADC\CAD\SEGMENT E1\PLAN SHEETS\STRUCTURES\CBR27C10\CBR27C10-BRG-SUP-004.dwg By: hodgesj

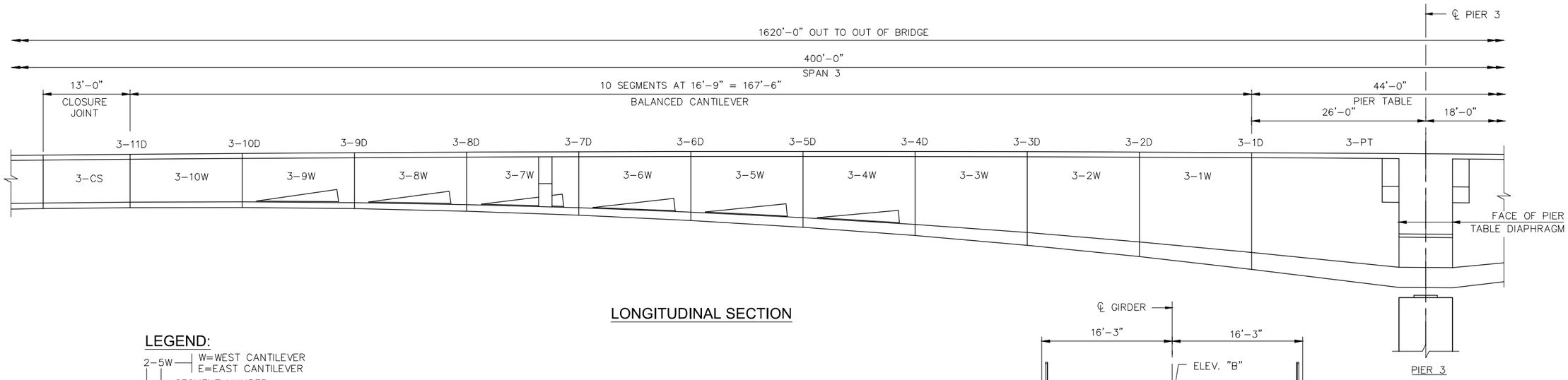

LONGITUDINAL SECTION

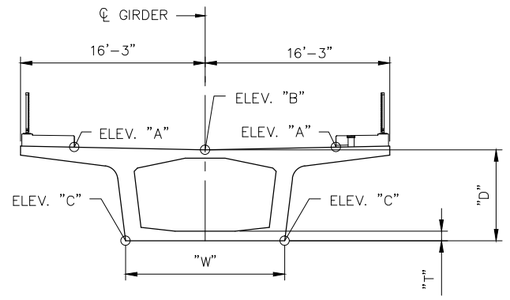

TYPICAL SECTION

LEGEND:

2–5W — W=WEST CANTILEVER, E=EAST CANTILEVER
- SEGMENT NUMBER
- PIER NUMBER

2–CS — CLOSURE SEGMENT
- SPAN NUMBER

2–PT — PIER TABLE
- PIER NUMBER

2–5D — D=DOWNSTATION OF PIER, U=UPSTATION OF PIER
- JOINT NUMBER
- PIER NUMBER

NOTES:

SPAN AND SEGMENT LENGTHS SHOWN ARE HORIZONTAL PROJECTIONS ALONG ℄ TRACK 2.

FOR ADDITIONAL SEGMENT GEOMETRY INFORMATION, SEE "TREATMENT OF HORIZONTAL CURVATURE" SHEET.

SEGMENT NUMBER DESIGNATES SEGMENT ORDER DURING BALANCED CANTILEVER CONSTRUCTION.

JOINT NUMBER	3–11D	3–10D	3–9D	3–8D	3–7D	3–6D	3–5D	3–4D	3–3D	3–2D	3–1D	℄ PIER
DISTANCE FROM ℄ PIER	193'–6"	176'–9"	160'–0"	143'–3"	126'–6"	109'–9"	93'–0"	76'–3"	59'–6"	42'–9"	26'–0"	4'–0"	0'–0"
ELEVATION "A"	965.98	966.11	966.21	966.29	966.35	966.39	966.40	966.39	966.36	966.30	966.22	966.08	966.05
ELEVATION "B"	965.75	965.88	965.98	966.06	966.12	966.16	966.17	966.16	966.13	966.07	965.99	965.85	965.82
ELEVATION "C"	957.75	957.78	957.62	957.24	956.65	955.84	954.83	953.59	952.13	950.45	948.53	945.85	945.82
GIRDER DEPTH "D"	8'–0"	8'–1⅛"	8'–4⅜"	8'–9⅞"	9'–5⅝"	10'–3¾"	11'–4⅛"	12'–6⅞"	14'–0"	15'–7½"	17'–5½"	20'–0"	20'–0"
BOTTOM SLAB THICKNESS "T"	10"	10¼"	10¾"	11¾"	1'–1¼"	1'–3"	1'–5¼"	1'–7⅞"	1'–11"	2'–2½"	2'–6½"	3'–0"	3'–0"
BOTTOM SLAB WIDTH "W"	14'–0"	13'–11¾"	13'–10⅞"	13'–9½"	13'–7⅝"	13'–5⅛"	13'–2"	12'–10¼"	12'–6"	12'–1⅛"	11'–7⅝"	11'–0"	11'–0"

NO.	DATE	BY	CHECK	DESIGN	REVISION / SUBMITTAL

DESIGNED BY: ETN CHECKED BY: JWJ
DRAWN BY: JWH CHECKED BY: JWJ

AECOM

90% SUBMISSION - 01/22/16

METROPOLITAN COUNCIL

SOUTHWEST Green Line LRT Extension

CIVIL - VOLUME 4D
EXCELSIOR BLVD
BRIDGE 27C10
SEGMENT DESIGNATION 5

DISCIPLINE: STRUCTURE
SHEET NAME: CBR27C10-BRG-SUP-005

SHEET 61 OF 174

Jan, 15 2016 02:08 pm V:\3400_ADC\CAD\SEGMENT E1\PLAN SHEETS\STRUCTURES\CBR27C10\CBR27C10-BRG-SUP-005.dwg By: hodgesj

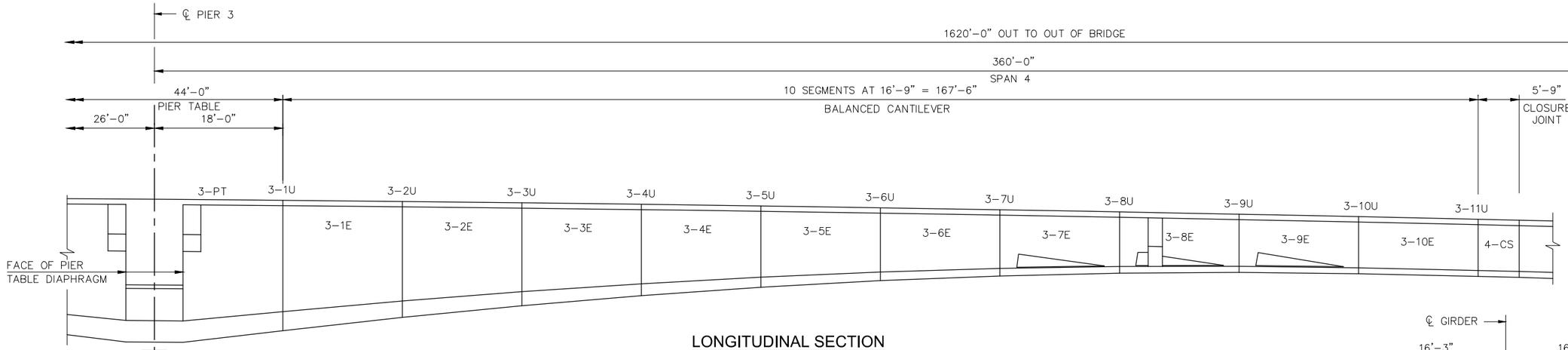

LONGITUDINAL SECTION

LEGEND:

- 2–5W — W=WEST CANTILEVER, E=EAST CANTILEVER; SEGMENT NUMBER; PIER NUMBER
- 2–CS — CLOSURE SEGMENT; SPAN NUMBER
- 2–PT — PIER TABLE; PIER NUMBER
- 2–5D — D=DOWNSTATION OF PIER, U=UPSTATION OF PIER; JOINT NUMBER; PIER NUMBER

NOTES:

SPAN AND SEGMENT LENGTHS SHOWN ARE HORIZONTAL PROJECTIONS ALONG ℄ TRACK 2.

FOR ADDITIONAL SEGMENT GEOMETRY INFORMATION, SEE "TREATMENT OF HORIZONTAL CURVATURE" SHEET.

SEGMENT NUMBER DESIGNATES SEGMENT ORDER DURING BALANCED CANTILEVER CONSTRUCTION.

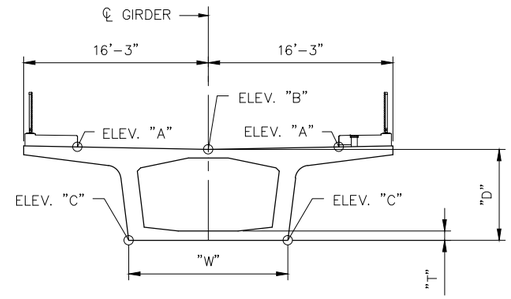

TYPICAL SECTION

JOINT NUMBER		3–1U	3–2U	3–3U	3–4U	3–5U	3–6U	3–7U	3–8U	3–9U	3–10U	3–11U
DISTANCE FROM ℄ PIER	4'–0"	18'–0"	34'–9"	51'–6"	68'–3"	85'–0"	101'–9"	118'–6"	135'–3"	152'–0"	168'–9"	185'–6"
ELEVATION "A"	966.02	965.90	965.74	965.56	965.35	965.12	964.86	964.58	964.28	963.96	963.61	963.24
ELEVATION "B"	965.79	965.67	965.51	965.33	965.12	964.89	964.63	964.35	964.05	963.73	963.38	963.01
ELEVATION "C"	945.79	947.43	949.28	950.92	952.33	953.50	954.42	955.08	955.48	955.58	955.38	955.01
GIRDER DEPTH "D"	20'–0"	18'–2⅞"	16'–2¾"	14'–4⅞"	12'–9½"	11'–4⅝"	10'–2½"	9'–3¼"	8'–6⅞"	8'–1¾"	8'–0"	8'–0"
BOTTOM SLAB THICKNESS "T"	3'–0"	2'–8"	2'–3½"	1'–11½"	1'–8"	1'–5"	1'–2½"	1'–0½"	11⅛"	10¼"	10"	10"
BOTTOM SLAB WIDTH "W"	11'–0"	11'–5¼"	11'–11⅜"	12'–4¾"	12'–9⅝"	13'–1⅞"	13'–5⅜"	13'–8¼"	13'–10¼"	13'–11⅝"	14'–0"	14'–0"

NO.	DATE	BY	CHECK	DESIGN	REVISION / SUBMITTAL

DESIGNED BY: ETN | CHECKED BY: JWJ
DRAWN BY: JWH | CHECKED BY: JWJ

AECOM

90% SUBMISSION - 01/22/16

METROPOLITAN COUNCIL

SOUTHWEST Green Line LRT Extension

CIVIL - VOLUME 4D
EXCELSIOR BLVD
BRIDGE 27C10
SEGMENT DESIGNATION 6

DISCIPLINE: STRUCTURE
SHEET NAME: CBR27C10-BRG-SUP-006

SHEET 62 OF 174

Jan, 15 2016 02:10 pm V:\3400_ADC\CAD\SEGMENT E1\PLAN SHEETS\STRUCTURES\CBR27C10\CBR27C10-BRG-SUP-006.dwg By: hodgesj

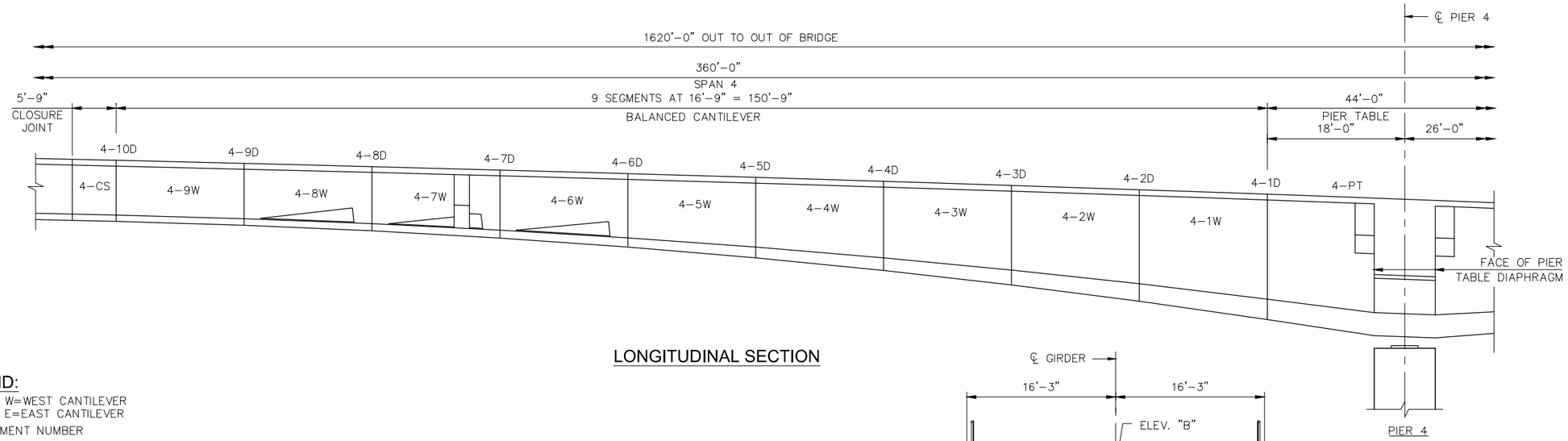

LONGITUDINAL SECTION

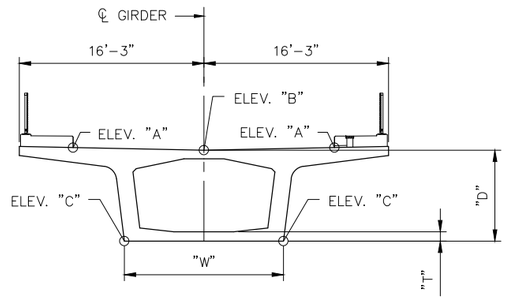

TYPICAL SECTION

LEGEND:

2–5W — W=WEST CANTILEVER, E=EAST CANTILEVER; 5 = SEGMENT NUMBER; 2 = PIER NUMBER

2–CS — CLOSURE SEGMENT; 2 = SPAN NUMBER

2–PT — PIER TABLE; 2 = PIER NUMBER

2–5D — D=DOWNSTATION OF PIER, U=UPSTATION OF PIER; 5 = JOINT NUMBER; 2 = PIER NUMBER

NOTES:

SPAN AND SEGMENT LENGTHS SHOWN ARE HORIZONTAL PROJECTIONS ALONG ℄ TRACK 2.

FOR ADDITIONAL SEGMENT GEOMETRY INFORMATION, SEE "TREATMENT OF HORIZONTAL CURVATURE" SHEET.

SEGMENT NUMBER DESIGNATES SEGMENT ORDER DURING BALANCED CANTILEVER CONSTRUCTION.

JOINT NUMBER	4–10D	4–9D	4–8D	4–7D	4–6D	4–5D	4–4D	4–3D	4–2D	4–1D	℄ PIER
DISTANCE FROM ℄ PIER	168'–9"	152'–0"	135'–3"	118'–6"	101'–9"	85'–0"	68'–3"	51'–6"	34'–9"	18'–0"	4'–0"	0'–0"
ELEVATION "A"	963.11	962.71	962.29	961.84	961.37	960.88	960.36	959.83	959.27	958.68	958.17	958.03
ELEVATION "B"	962.88	962.48	962.06	961.61	961.14	960.65	960.13	959.60	959.04	958.45	957.94	957.80
ELEVATION "C"	954.88	954.38	953.66	952.71	951.53	950.12	948.47	946.58	944.44	942.06	939.94	939.80
GIRDER DEPTH "D"	8'–0"	8'–1¼"	8'–4¾"	8'–10⅞"	9'–7⅜"	10'–6⅜"	11'–8"	13'–0¼"	14'–7⅛"	16'–4¾"	18'–0"	18'–0"
BOTTOM SLAB THICKNESS "T"	10"	10¼"	11⅛"	1'–0½"	1'–2½"	1'–5"	1'–8"	1'–11½"	2'–3½"	2'–8"	3'–0"	3'–0"
BOTTOM SLAB WIDTH "W"	14'–0"	13'–11⅝"	13'–10⅞"	13'–9¼"	13'–7⅛"	13'–4⅜"	13'–1"	12'–9"	12'–4¼"	11'–10⅞"	11'–6"	11'–6"

NO.	DATE	BY	CHECK	DESIGN	REVISION / SUBMITTAL

DESIGNED BY: ETN CHECKED BY: JWJ
DRAWN BY: JWH CHECKED BY: JWJ

AECOM

90% SUBMISSION - 01/22/16

METROPOLITAN COUNCIL

SOUTHWEST Green Line LRT Extension

CIVIL - VOLUME 4D
EXCELSIOR BLVD
BRIDGE 27C10
SEGMENT DESIGNATION 7

DISCIPLINE: STRUCTURE
SHEET NAME: CBR27C10-BRG-SUP-007

SHEET 63 OF 174

Jan, 15 2016 02:13 pm v:\3400_ADC\CAD\SEGMENT E1\PLAN SHEETS\STRUCTURES\CBR27C10\CBR27C10-BRG-SUP-007.dwg By: hodgesj

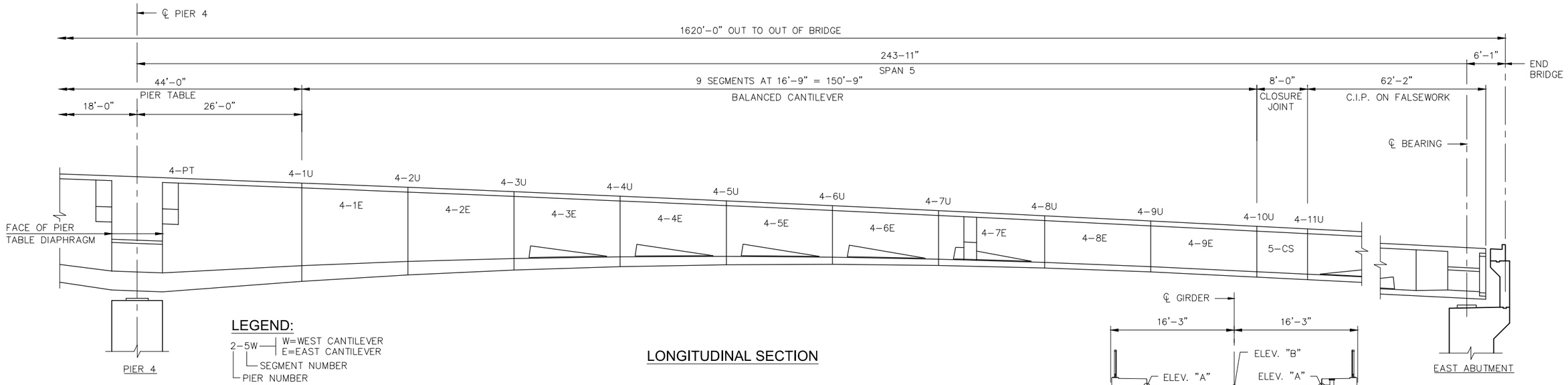

LONGITUDINAL SECTION

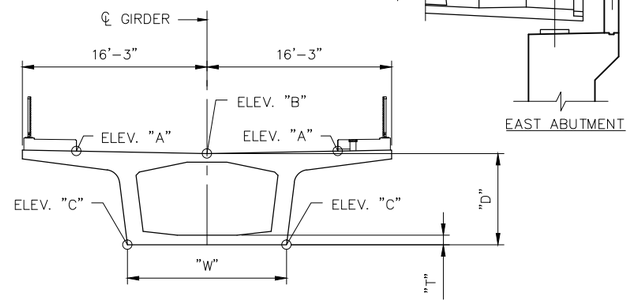

TYPICAL SECTION

LEGEND:

2-5W — W=WEST CANTILEVER, E=EAST CANTILEVER; SEGMENT NUMBER; PIER NUMBER

2-CS — CLOSURE SEGMENT; SPAN NUMBER

2-PT — PIER TABLE; PIER NUMBER

2-5D — D=DOWNSTATION OF PIER, U=UPSTATION OF PIER; JOINT NUMBER; PIER NUMBER

NOTES:

SPAN AND SEGMENT LENGTHS SHOWN ARE HORIZONTAL PROJECTIONS ALONG ℄ TRACK 2.

FOR ADDITIONAL SEGMENT GEOMETRY INFORMATION, SEE "TREATMENT OF HORIZONTAL CURVATURE" SHEET.

SEGMENT NUMBER DESIGNATES SEGMENT ORDER DURING BALANCED CANTILEVER CONSTRUCTION.

JOINT NUMBER		4-1U	4-2U	4-3U	4-4U	4-5U	4-6U	4-7U	4-8U	4-9U	4-10U	4-11U
DISTANCE FROM ℄ PIER	4'-0"	26'-0"	42'-9"	59'-6"	76'-3"	93'-0"	109'-9"	126'-6"	143'-3"	160'-0"	176'-9"	184'-9"	246'-11"
ELEVATION "A"	957.88	957.04	956.37	955.68	954.96	954.23	953.47	952.68	951.88	951.05	950.21	949.81	946.70
ELEVATION "B"	957.65	956.81	956.14	955.45	954.73	954.00	953.24	952.45	951.65	950.82	949.98	949.58	946.47
ELEVATION "C"	939.65	941.30	942.32	943.10	943.63	943.93	943.99	943.82	943.42	942.79	941.98	941.58	938.47
GIRDER DEPTH "D"	18'-0"	15'-6⅛"	13'-9⅞"	12'-4⅛"	11'-1¼"	10'-0¾"	9'-3"	8'-7⅝"	8'-2¾"	8'-0⅜"	8'-0"	8'-0"	8'-0"
BOTTOM SLAB THICKNESS "T"	3'-0"	2'-5⅞"	2'-1½"	1'-9¾"	1'-6½"	1'-3¾"	1'-1½"	11¾"	10⅝"	10⅛"	10"	10"	10"
BOTTOM SLAB WIDTH "W"	11'-6"	12'-1½"	12'-6½"	12'-11"	13'-2¾"	13'-5⅞"	13'-8¼"	13'-10⅝"	13'-11⅜"	13'-11⅞"	14'-0"	14'-0"	14'-0"

NO.	DATE	BY	CHECK	DESIGN	REVISION / SUBMITTAL

DESIGNED BY: ETN | CHECKED BY: JWJ
DRAWN BY: JWH | CHECKED BY: JWJ

AECOM

90% SUBMISSION - 01/22/16

METROPOLITAN COUNCIL

SOUTHWEST Green Line LRT Extension

CIVIL - VOLUME 4D
EXCELSIOR BLVD
BRIDGE 27C10
SEGMENT DESIGNATION 8

DISCIPLINE: STRUCTURE
SHEET NAME: CBR27C10-BRG-SUP-008

SHEET 64 OF 174

Jan, 15 2016 02:15 pm v:\3400_ADC\CAD\SEGMENT E1\PLAN SHEETS\STRUCTURES\CBR27C10\CBR27C10-BRG-SUP-008.dwg By: hodgesj

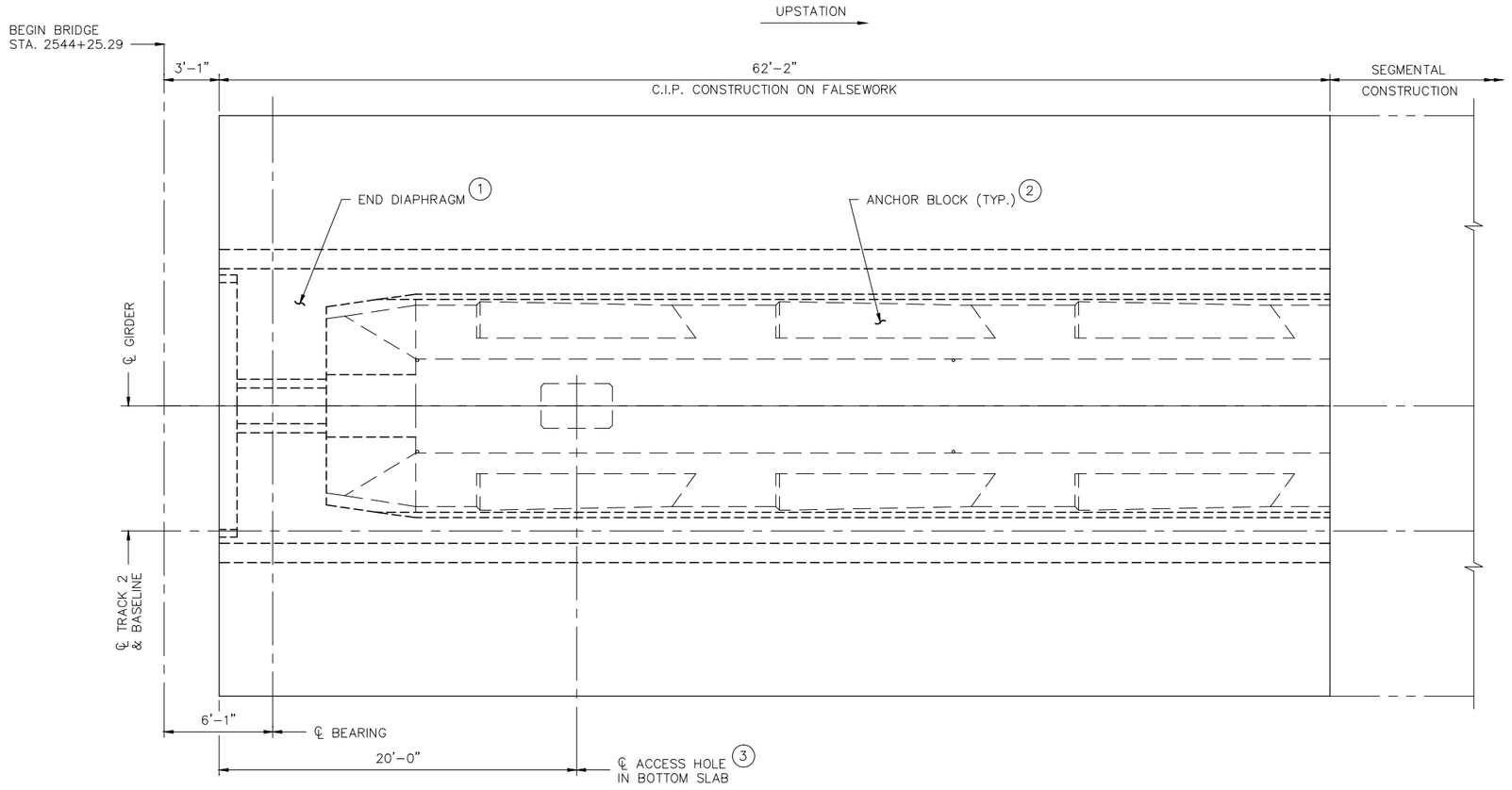

PARTIAL PLAN

(SPAN 1 SHOWN, SPAN 5 SIMILAR)

NOTES:

LONGITUDINAL DIMENSIONS SHOWN ARE HORIZONTAL PROJECTIONS ALONG ℄ TRACK 2.

FOR DRAIN INLET DETAILS, SEE "DRAINAGE DETAILS" SHEETS.

(1) FOR END DIAPHRAGM DIMENSIONS, SEE "END DIAPHRAGM DETAILS" SHEET.

(2) FOR BOTTOM SLAB ANCHOR BLOCK DIMENSIONS, SEE "BOTTOM SLAB ANCHOR BLOCK DETAILS 1" SHEET.

(3) FOR DETAILS OF BOTTOM SLAB ACCESS HOLE, SEE "MISC. SUPERSTRUCTURE DETAILS 1" SHEET.

NO.	DATE	BY	CHECK	DESIGN	REVISION / SUBMITTAL

DESIGNED BY: ETN CHECKED BY: JWJ

DRAWN BY: JWH CHECKED BY: JWJ

AECOM

90% SUBMISSION - 01/22/16

METROPOLITAN COUNCIL

SOUTHWEST Green Line LRT Extension

CIVIL - VOLUME 4D
EXCELSIOR BLVD
BRIDGE 27C10
SPANS 1 & 5 C.I.P. FRAMING PLAN

DISCIPLINE: STRUCTURE

SHEET NAME: CBR27C10-BRG-SUP-009

SHEET 65 OF 174

Jan. 15 2016 01:13 pm C:\Users\HodgesJ\appdata\local\temp\AcPublish_8972\CBR27C10-BRG-SUP-009.dwg By: hodgesj

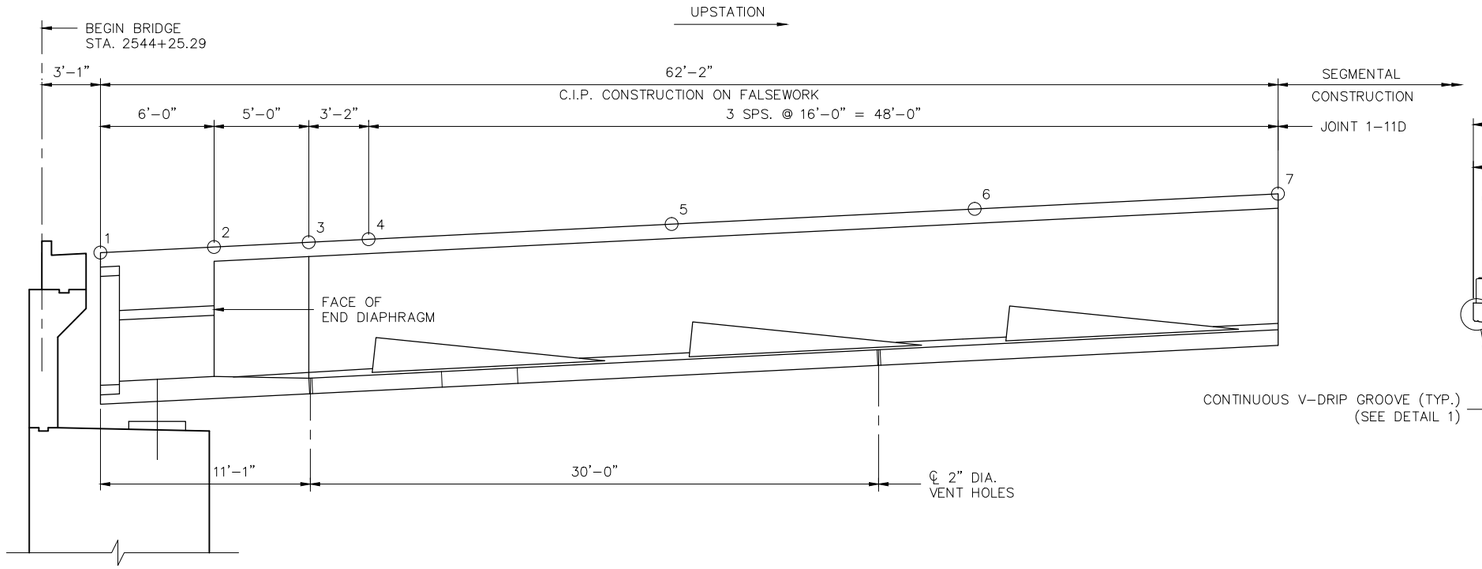

SPAN 1 - ELEVATION

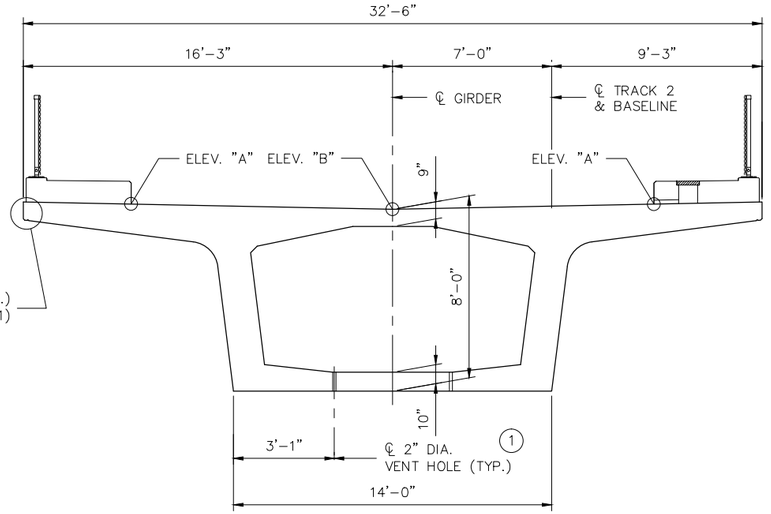

TYPICAL SECTION

(LOOKING UPSTATION)

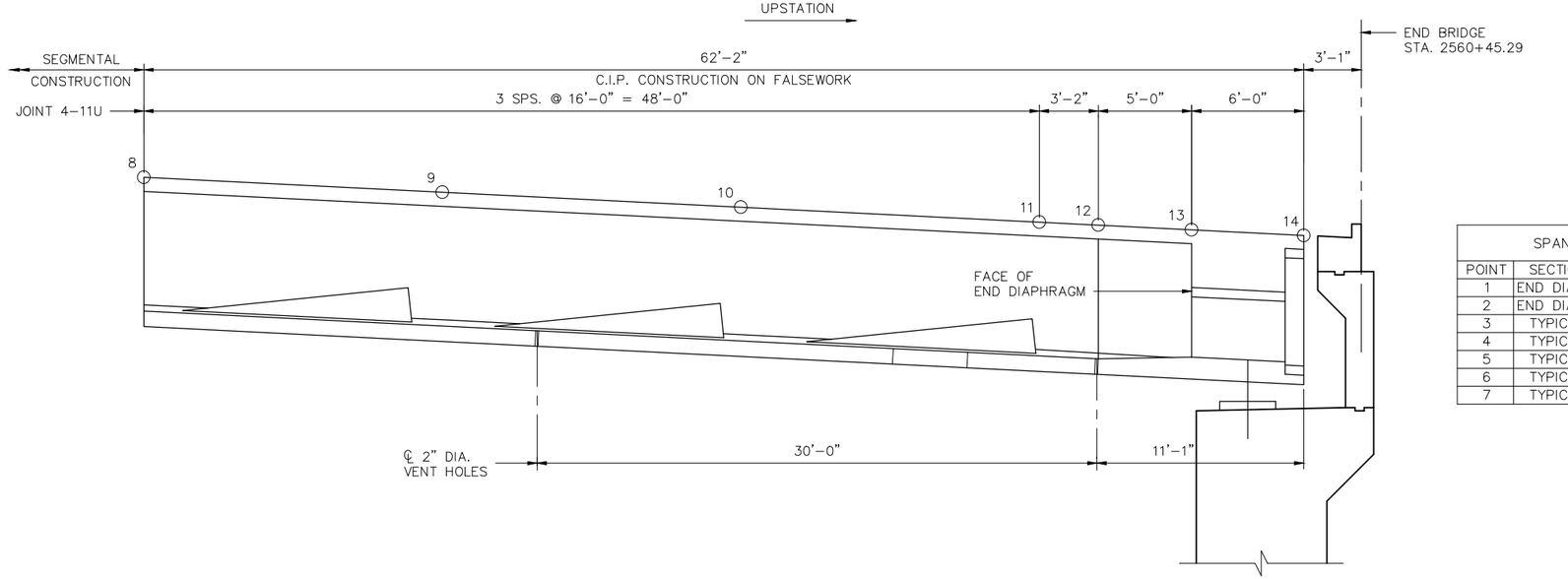

SPAN 5 - ELEVATION

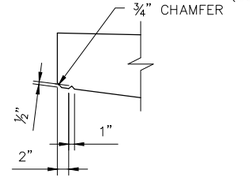

DETAIL 1

SPAN 1 C.I.P. DECK ELEVATIONS				
POINT	SECTION	STATION	ELEV. "A"	ELEV. "B"
1	END DIAPH.	2544+28.37	935.90	935.67
2	END DIAPH.	2544+34.37	936.20	935.97
3	TYPICAL	2544+39.37	936.45	936.22
4	TYPICAL	2544+42.54	936.61	936.38
5	TYPICAL	2544+58.54	937.41	937.18
6	TYPICAL	2544+74.54	938.21	937.98
7	TYPICAL	2544+90.54	939.01	938.78

SPAN 5 C.I.P. DECK ELEVATIONS				
POINT	SECTION	STATION	ELEV. "A"	ELEV. "B"
8	TYPICAL	2559+80.04	949.81	949.58
9	TYPICAL	2559+96.04	949.01	948.78
10	TYPICAL	2560+12.04	948.21	947.98
11	TYPICAL	2560+28.04	947.41	947.18
12	TYPICAL	2560+31.21	947.25	947.02
13	END DIAPH.	2560+36.21	947.00	946.77
14	END DIAPH.	2560+42.21	946.70	946.47

NOTES:

LONGITUDINAL DIMENSIONS SHOWN ARE HORIZONTAL PROJECTIONS ALONG ℄ TRACK 2.

FOR END DIAPHRAGM DIMENSIONS, SEE "END DIAPHRAGM DETAILS" SHEET.

FOR TYPICAL DIMENSIONS NOT SHOWN, SEE "CANTILEVER SEGMENT DETAILS" SHEET.

FOR BOTTOM SLAB ACCESS HOLE DETAILS, SEE "MISC. SUPERSTRUCTURE DETAILS 1" SHEET.

FOR DRAIN INLET DETAILS, SEE "DRAINAGE DETAILS" SHEETS.

(1) PROVIDE VENT HOLES WITH VERMIN GUARDS, SEE "MISC. SUPERSTRUCTURE DETAILS 3" SHEET.

NO.	DATE	BY	CHECK	DESIGN	REVISION / SUBMITTAL

DESIGNED BY: ETN | CHECKED BY: JWJ
DRAWN BY: JWH | CHECKED BY: JWJ

AECOM

90% SUBMISSION - 01/22/16

METROPOLITAN COUNCIL

SOUTHWEST Green Line LRT Extension

CIVIL - VOLUME 4D
EXCELSIOR BLVD
BRIDGE 27C10
SPANS 1 & 5 C.I.P. SECTION DETAILS

DISCIPLINE: STRUCTURE
SHEET NAME: CBR27C10-BRG-SUP-010

SHEET 66 OF 174

Jan, 15 2016 01:15 pm V:\3400_ADC\CAD\SEGMENT E1\PLAN SHEETS\STRUCTURES\CBR27C10\CBR27C10-BRG-SUP-010.dwg By: hodgesj

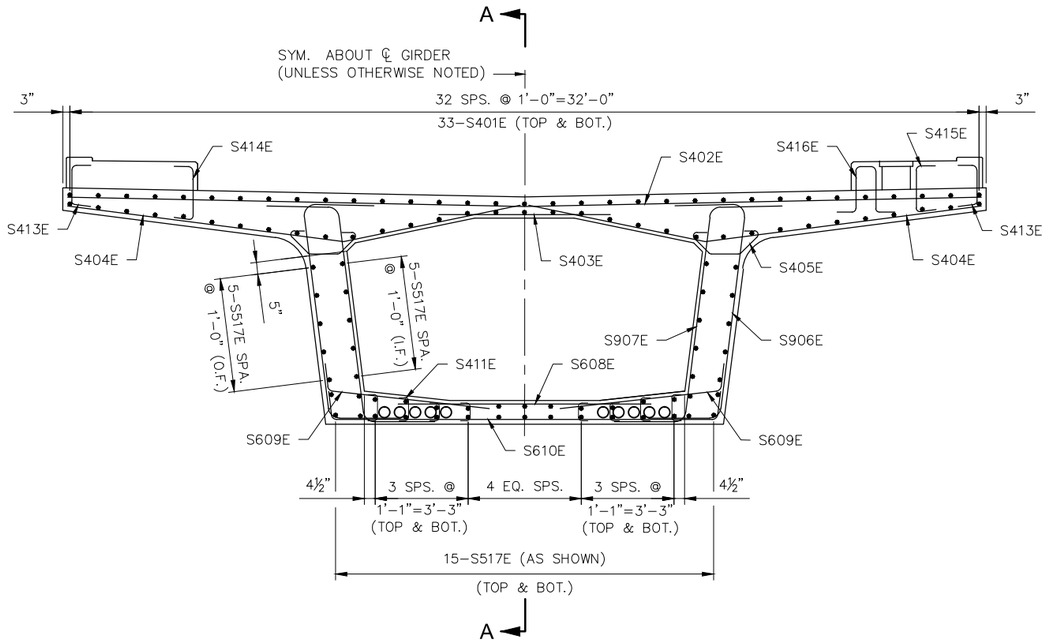

CROSS SECTION

NOTES:

MIN. CONCRETE COVER = 2" EXTERIOR, 1½" INTERIOR (UNLESS OTHERWISE NOTED).

SPACE ALL REINFORCING TO CLEAR POST-TENSIONING.

FOR BOTTOM SLAB ACCESS HOLE DETAILS, SEE "MISC. SUPERSTRUCTURE DETAILS 1" SHEET.

FOR DRAIN INLET DETAILS, SEE "DRAINAGE DETAILS" SHEETS.

FOR PLINTH REINF. DETAILS, SEE " MISC. SUPERSTRUCTURE DETAILS 3" SHEET.

I.F. DENOTES INSIDE FACE.
O.F. DENOTES OUTSIDE FACE.

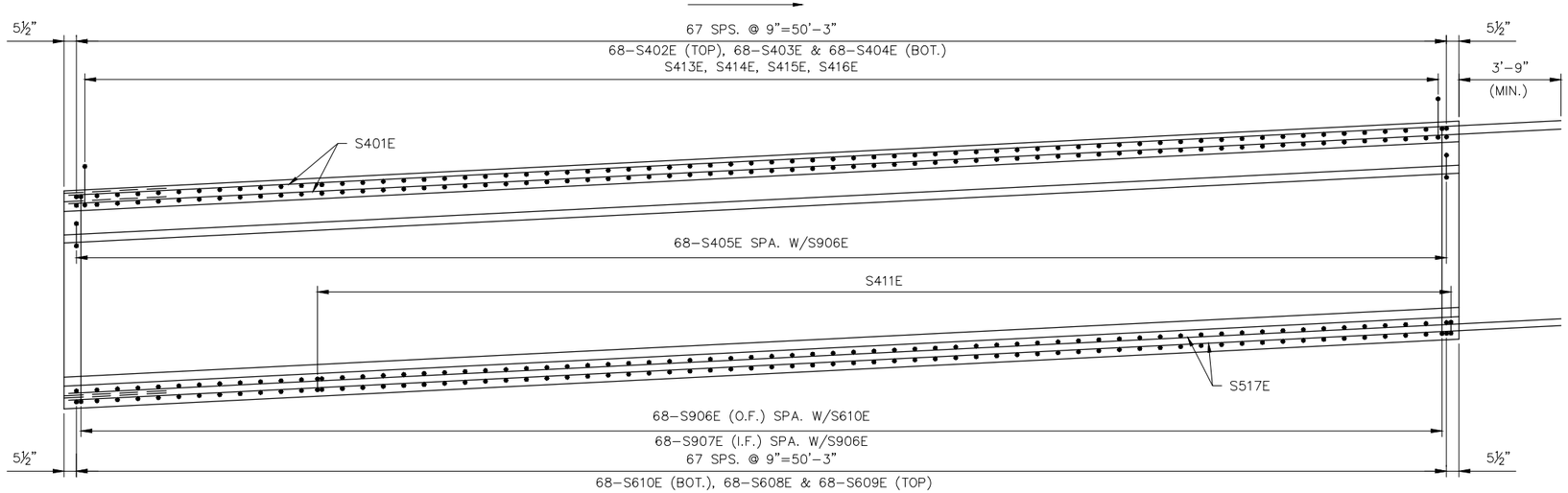

SECTION A-A

NO.	DATE	BY	CHECK	DESIGN	REVISION / SUBMITTAL

DESIGNED BY: ETN | CHECKED BY: NMP
DRAWN BY: JWH | CHECKED BY: JWJ

AECOM

90% SUBMISSION - 01/22/16

METROPOLITAN COUNCIL

SOUTHWEST Green Line LRT Extension

CIVIL - VOLUME 4D
EXCELSIOR BLVD
BRIDGE 27C10
SPAN 1 C.I.P. REINFORCEMENT 1

DISCIPLINE: STRUCTURE
SHEET NAME: CBR27C10-BRG-SUP-011

SHEET 67 OF 174

Jan, 15 2016 01:19 pm V:\3400_ADC\CAD\SEGMENT E1\PLAN SHEETS\STRUCTURES\CBR27C10\CBR27C10-BRG-SUP-011.dwg By: hodgesj

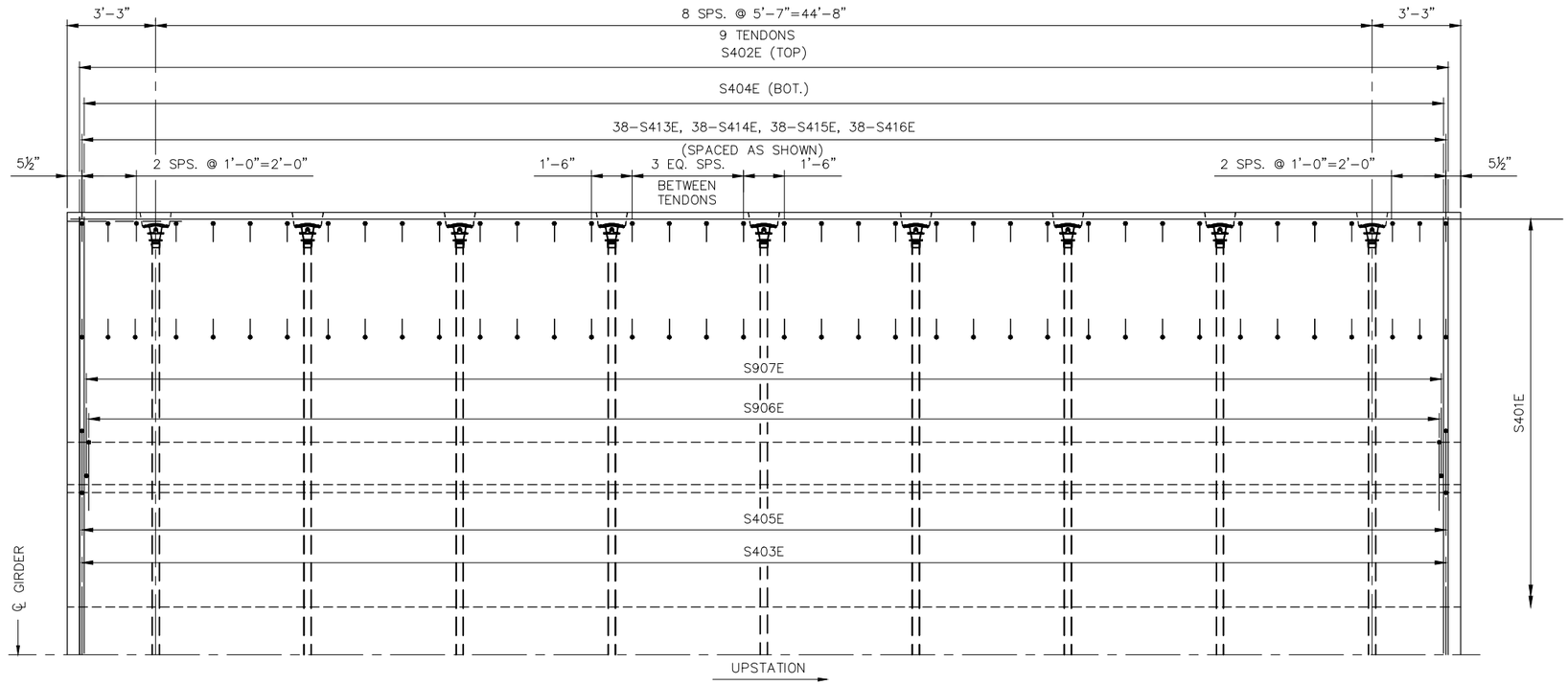

HALF PLAN-TOP SLAB

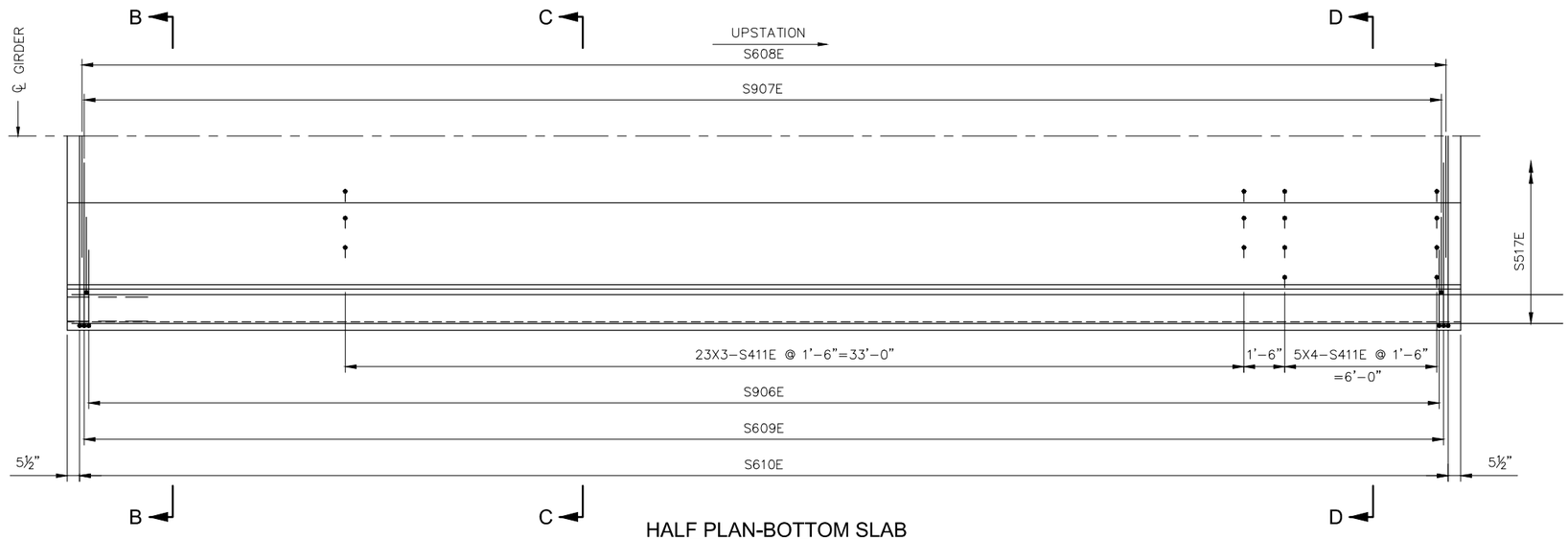

HALF PLAN-BOTTOM SLAB

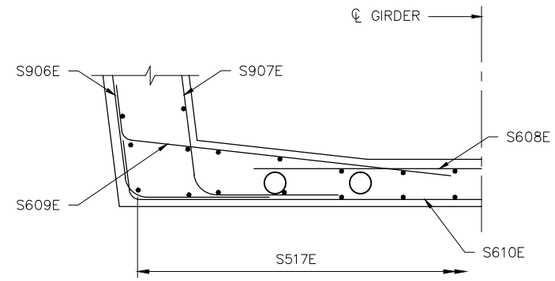

SECTION B-B

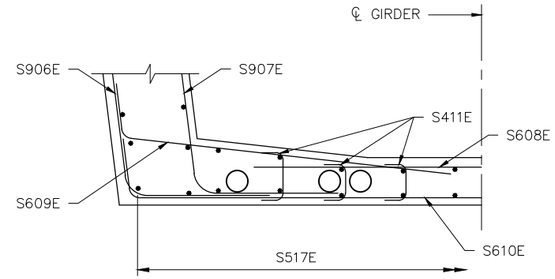

SECTION C-C

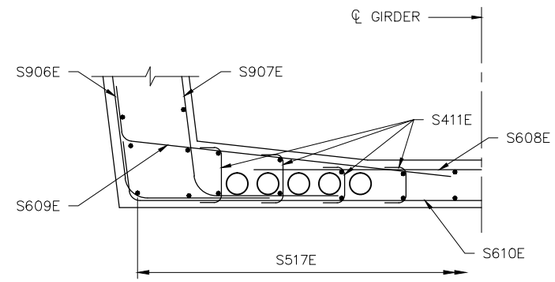

SECTION D-D

NO.	DATE	BY	CHECK	DESIGN	REVISION / SUBMITTAL

DESIGNED BY: ETN | CHECKED BY: NMP
DRAWN BY: JWH | CHECKED BY: JWJ

AECOM

90% SUBMISSION - 01/22/16

METROPOLITAN COUNCIL

SOUTHWEST Green Line LRT Extension

CIVIL - VOLUME 4D
EXCELSIOR BLVD
BRIDGE 27C10
SPAN 1 C.I.P. REINFORCEMENT 2

DISCIPLINE: STRUCTURE
SHEET NAME: CBR27C10-BRG-SUP-012

SHEET 68 OF 174

Jan, 15 2016 01:19 pm V:\3400_ADC\CAD\SEGMENT E1\PLAN SHEETS\STRUCTURES\CBR27C10\CBR27C10-BRG-SUP-011.dwg By: hodgesj

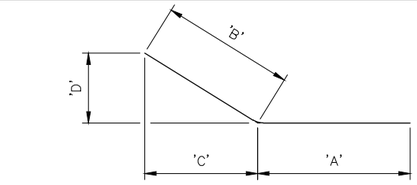

BAR	'A'	'B'	'C'	'D'
S402E	16'–1"	16'–1"	16'–0⅞"	7¾"
S404E	9'–9"	6'–0"	5'–8⅛"	1'–11⅜"
S609E	5'–9"	1'–0"	2¾"	11⅝"

S402E, S404E, S609E

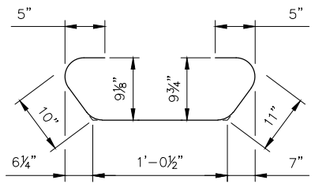

S405E

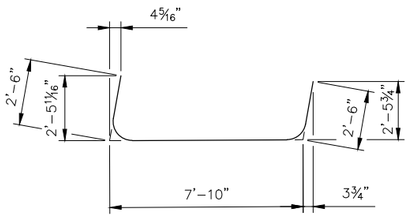

S906E

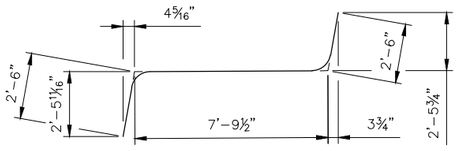

S907E

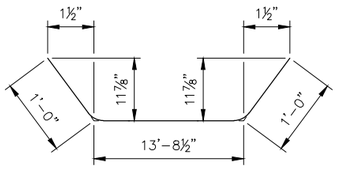

S610E

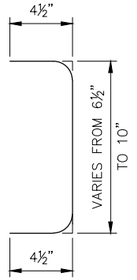

S411E

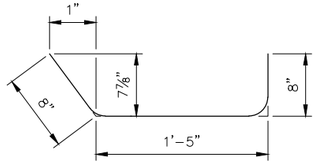

S413E

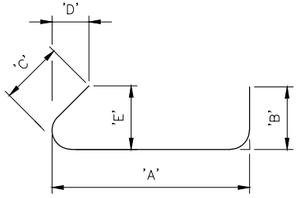

BAR	'A'	'B'	'C'	'D'	'E'
S414E	1'–11"	8"	8"	¾"	8⅛"
S415E	1'–8"	8"	8"	¾"	8⅛"

S414E, S415E

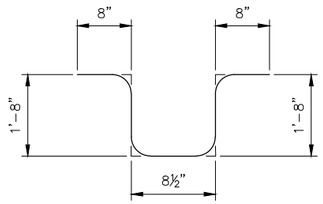

S416E

BILL OF REINFORCEMENT FOR SPAN 1
C.I.P. ON FALSEWORK SECTION

BAR	NO.	LENGTH	SHAPE	LOCATION
S401E	66	54'–10"	STR.	LONGITUDINAL
S402E	68	32'–2"		TOP SLAB
S403E	68	5'–0"	STR.	TOP SLAB
S404E	136	15'–9"		TOP SLAB
S405E	136	3'–9"		TOP SLAB
S906E	136	12'–10"		WEB
S907E	136	12'–10"		WEB
S608E	68	9'–7"	STR.	BOTTOM SLAB
S609E	136	6'–9"		BOTTOM SLAB
S610E	68	15'–9"		BOTTOM SLAB
S411E	178	1'–6" *		BOTTOM SLAB
S413E	76	2'–9"		WALKWAY
S414E	38	3'–2"		WALKWAY
S415E	38	2'–11"		WALKWAY
S416E	38	5'–5"		WALKWAY
S517E	50	54'–10"	STR.	LONGITUDINAL

* DENOTES AVERAGE LENGTH

LEGEND

S 4 07 E

- S — SUPERSTRUCTURE
- 4 — BAR SIZE
- 07 — BAR DESIGNATION
- E = EPOXY
- S = STAINLESS STEEL
- BLANK FOR BLACK BAR

NO.	DATE	BY	CHECK	DESIGN	REVISION / SUBMITTAL

DESIGNED BY: ETN | CHECKED BY: NMP
DRAWN BY: JWH | CHECKED BY: JWJ

AECOM

90% SUBMISSION - 01/22/16

METROPOLITAN COUNCIL

SOUTHWEST Green Line LRT Extension

CIVIL - VOLUME 4D
EXCELSIOR BLVD
BRIDGE 27C10
SPAN 1 C.I.P. REINFORCEMENT 3

DISCIPLINE: STRUCTURE
SHEET NAME: CBR27C10-BRG-SUP-013

SHEET 69 OF 174

Jan, 15 2016 01:20 pm V:\3400_ADC\CAD\SEGMENT E1\PLAN SHEETS\STRUCTURES\CBR27C10\CBR27C10-BRG-SUP-011.dwg By: hodgesj

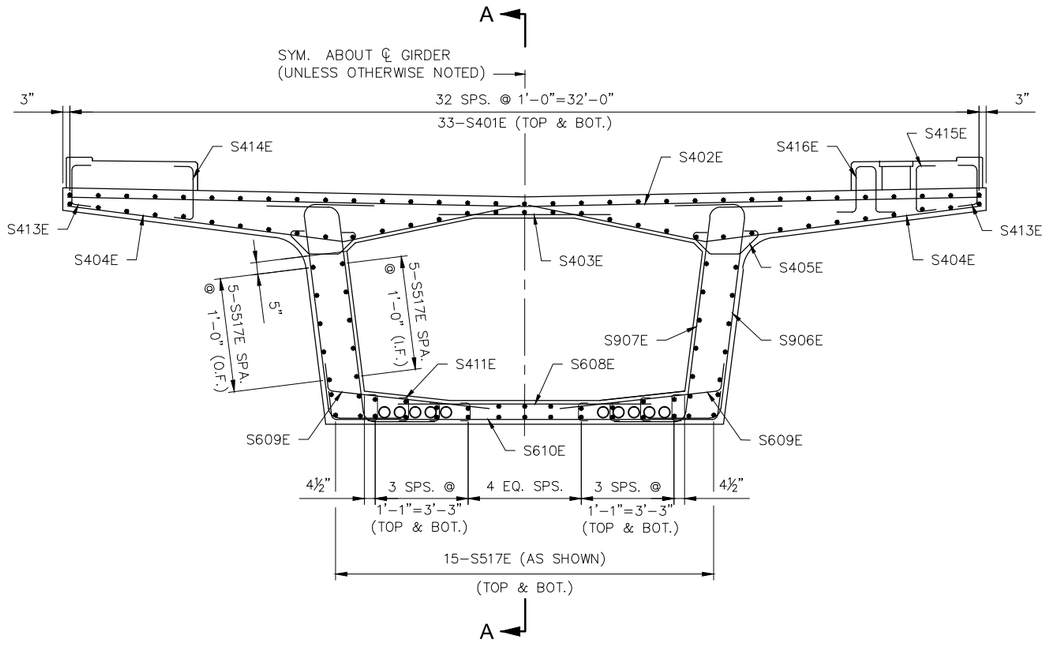

CROSS SECTION

NOTES:

MIN. CONCRETE COVER = 2" EXTERIOR, 1½" INTERIOR (UNLESS OTHERWISE NOTED).

SPACE ALL REINFORCING TO CLEAR POST-TENSIONING.

FOR BOTTOM SLAB ACCESS HOLE DETAILS, SEE "MISC. SUPERSTRUCTURE DETAILS 1" SHEET.

FOR DRAIN INLET DETAILS, SEE "DRAINAGE DETAILS" SHEETS.

FOR PLINTH REINF. DETAILS, SEE " MISC. SUPERSTRUCTURE DETAILS 3" SHEET.

I.F. DENOTES INSIDE FACE.
O.F. DENOTES OUTSIDE FACE.

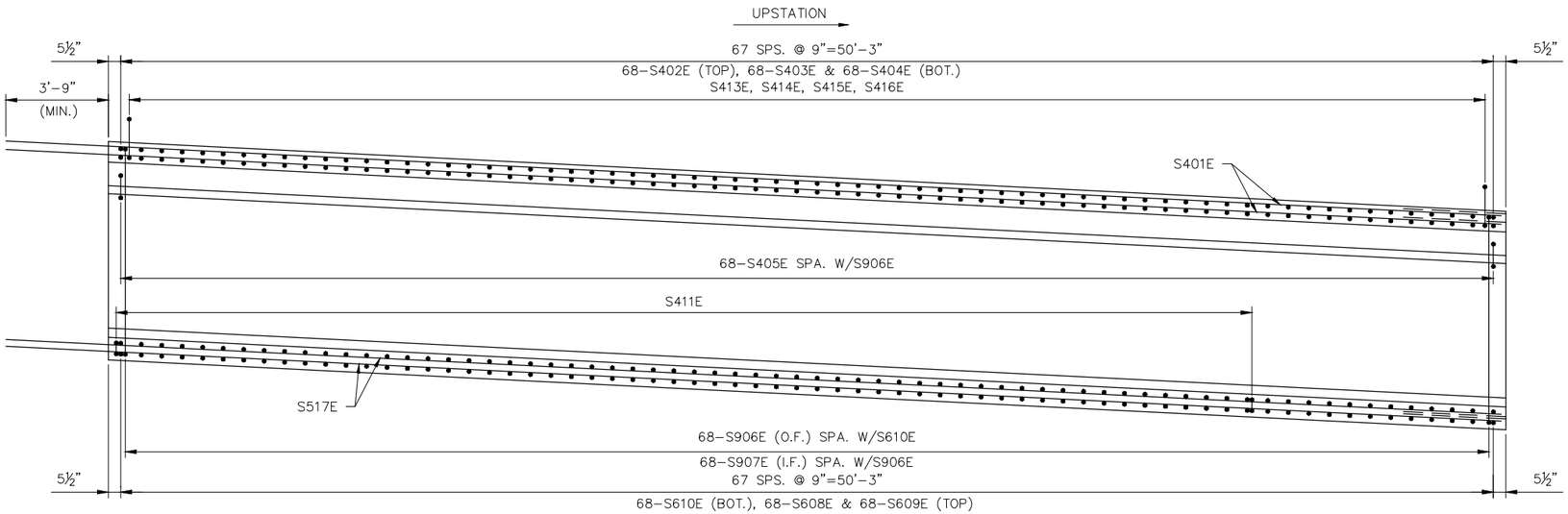

SECTION A-A

NO.	DATE	BY	CHECK	DESIGN	REVISION / SUBMITTAL

DESIGNED BY: ETN | CHECKED BY: NMP
DRAWN BY: JWH | CHECKED BY: JWJ

AECOM

90% SUBMISSION - 01/22/16

METROPOLITAN COUNCIL

SOUTHWEST Green Line LRT Extension

CIVIL - VOLUME 4D
EXCELSIOR BLVD
BRIDGE 27C10
SPAN 5 C.I.P. REINFORCEMENT 1

DISCIPLINE: STRUCTURE
SHEET NAME: CBR27C10-BRG-SUP-014

SHEET 70 OF 174

Jan, 15 2016 01:23 pm v:\3400_ADC\CAD\SEGMENT E1\PLAN SHEETS\STRUCTURES\CBR27C10\CBR27C10-BRG-SUP-014.dwg By: hodgesj

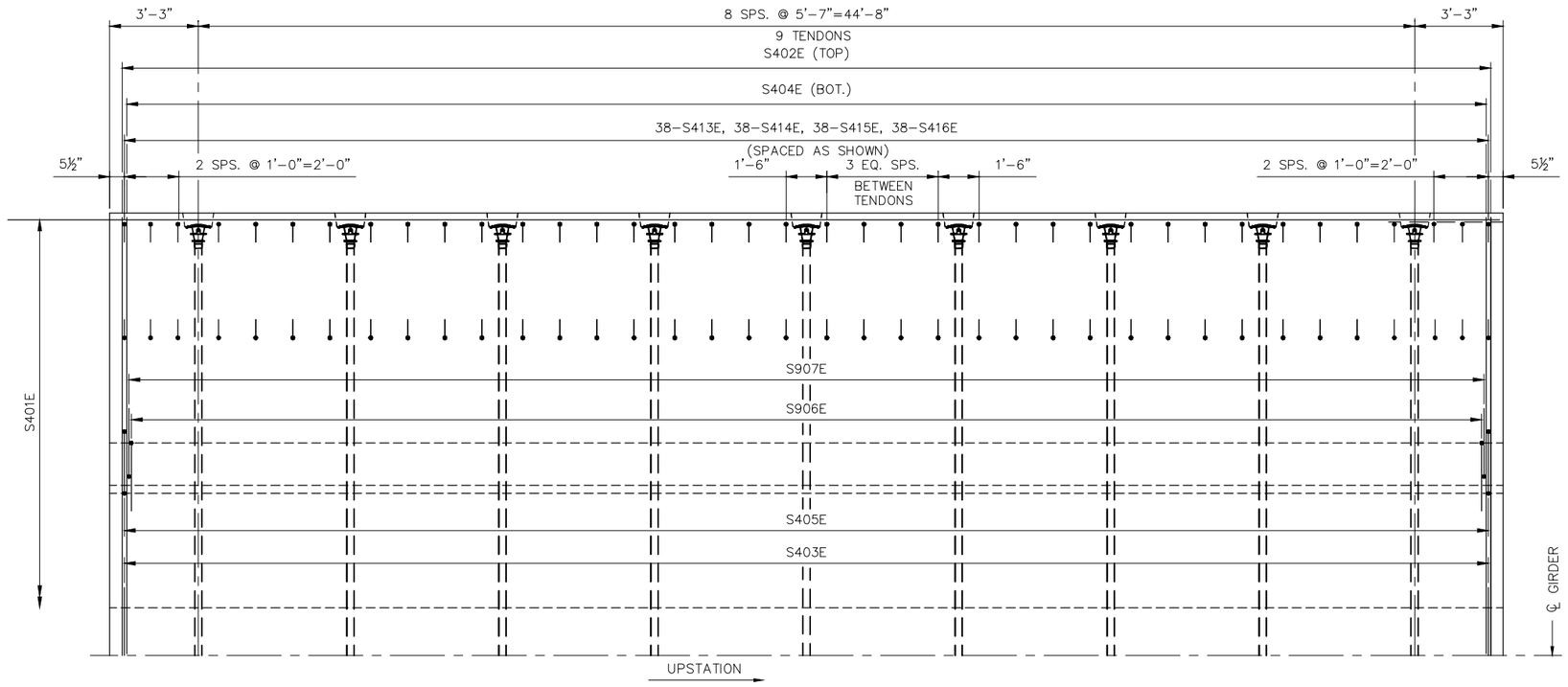

HALF PLAN-TOP SLAB

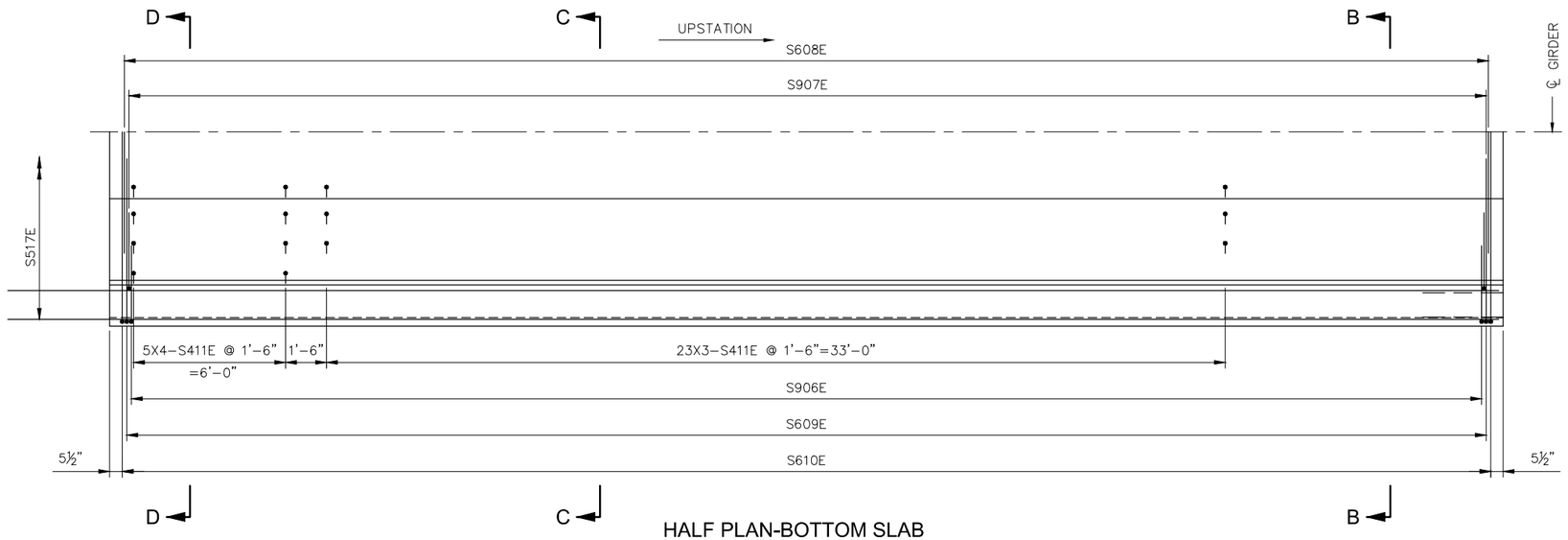

HALF PLAN-BOTTOM SLAB

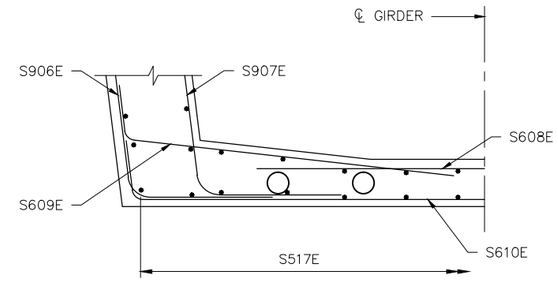

SECTION B-B

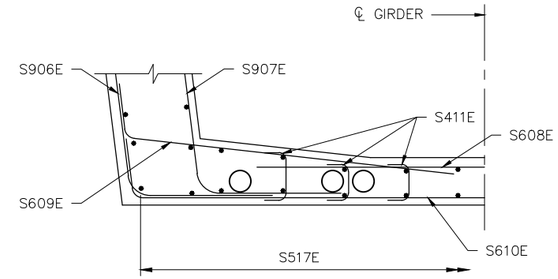

SECTION C-C

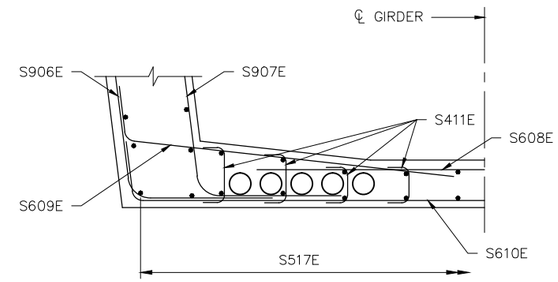

SECTION D-D

NO.	DATE	BY	CHECK	DESIGN	REVISION / SUBMITTAL

DESIGNED BY: ETN | CHECKED BY: NMP
DRAWN BY: JWH | CHECKED BY: JWJ

AECOM

90% SUBMISSION - 01/22/16

METROPOLITAN COUNCIL

SOUTHWEST Green Line LRT Extension

CIVIL - VOLUME 4D
EXCELSIOR BLVD
BRIDGE 27C10
SPAN 5 C.I.P. REINFORCEMENT 2

DISCIPLINE: STRUCTURE
SHEET NAME: CBR27C10-BRG-SUP-015

SHEET 71 OF 174

Jan, 15 2016 01:23 pm V:\3400_ADC\CAD\SEGMENT E1\PLAN SHEETS\STRUCTURES\CBR27C10\CBR27C10-BRG-SUP-014.dwg By: hodgesj

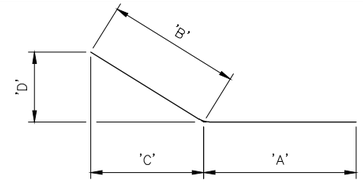

BAR	'A'	'B'	'C'	'D'
S402E	16'–1"	16'–1"	16'–0⅞"	7¾"
S404E	9'–9"	6'–0"	5'–8⅛"	1'–11⅜"
S609E	5'–9"	1'–0"	2¾"	11⅝"

S402E, S404E, S609E

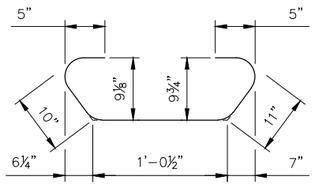

S405E

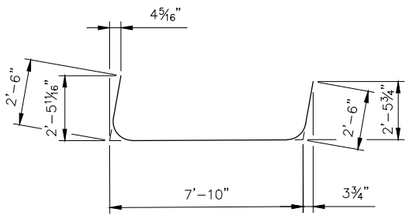

S906E

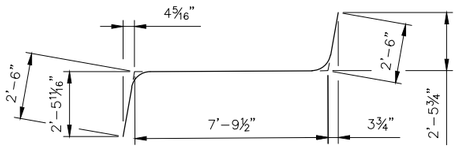

S907E

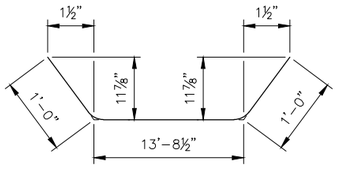

S610E

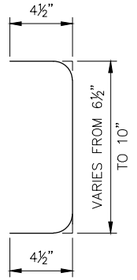

S411E

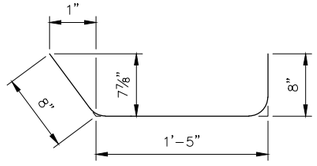

S413E

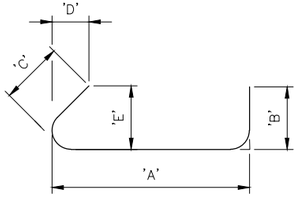

BAR	'A'	'B'	'C'	'D'	'E'
S414E	1'–11"	8"	8"	¾"	8⅛"
S415E	1'–8"	8"	8"	¾"	8⅛"

S414E, S415E

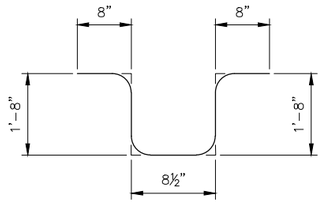

S416E

BILL OF REINFORCEMENT FOR SPAN 5 C.I.P. ON FALSEWORK SECTION

BAR	NO.	LENGTH	SHAPE	LOCATION
S401E	66	54'–10"	STR.	LONGITUDINAL
S402E	68	32'–2"		TOP SLAB
S403E	68	5'–0"	STR.	TOP SLAB
S404E	136	15'–9"		TOP SLAB
S405E	136	3'–9"		TOP SLAB
S906E	136	12'–10"		WEB
S907E	136	12'–10"		WEB
S608E	68	9'–7"	STR.	BOTTOM SLAB
S609E	136	6'–9"		BOTTOM SLAB
S610E	68	15'–9"		BOTTOM SLAB
S411E	178	1'–6" *		BOTTOM SLAB
S413E	76	2'–9"		WALKWAY
S414E	38	3'–2"		WALKWAY
S415E	38	2'–11"		WALKWAY
S416E	38	5'–5"		WALKWAY
S517E	50	54'–10"	STR.	LONGITUDINAL

* DENOTES AVERAGE LENGTH

LEGEND

S 4 07 E

- S — SUPERSTRUCTURE
- 4 — BAR SIZE
- 07 — BAR DESIGNATION
- E — E = EPOXY; S = STAINLESS STEEL; BLANK FOR BLACK BAR

NO.	DATE	BY	CHECK	DESIGN	REVISION / SUBMITTAL

DESIGNED BY: ETN | CHECKED BY: NMP
DRAWN BY: JWH | CHECKED BY: JWJ

AECOM

90% SUBMISSION - 01/22/16

METROPOLITAN COUNCIL

SOUTHWEST Green Line LRT Extension

CIVIL - VOLUME 4D
EXCELSIOR BLVD
BRIDGE 27C10
SPAN 5 C.I.P. REINFORCEMENT 3

DISCIPLINE: STRUCTURE
SHEET NAME: CBR27C10-BRG-SUP-016

SHEET 72 OF 174

Jan, 15 2016 01:23 pm V:\3400_ADC\CAD\SEGMENT E1\PLAN SHEETS\STRUCTURES\CBR27C10\CBR27C10-BRG-SUP-014.dwg By: hodgesj

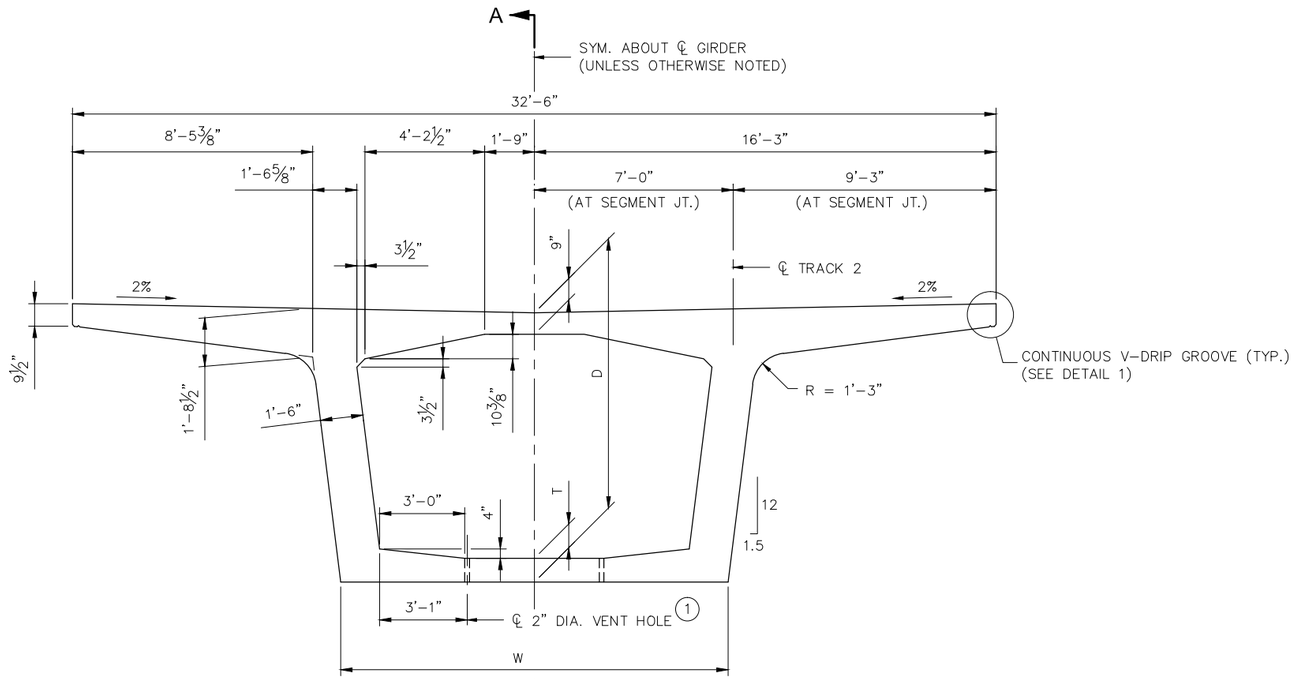

CROSS SECTION

(LOOKING UPSTATION)

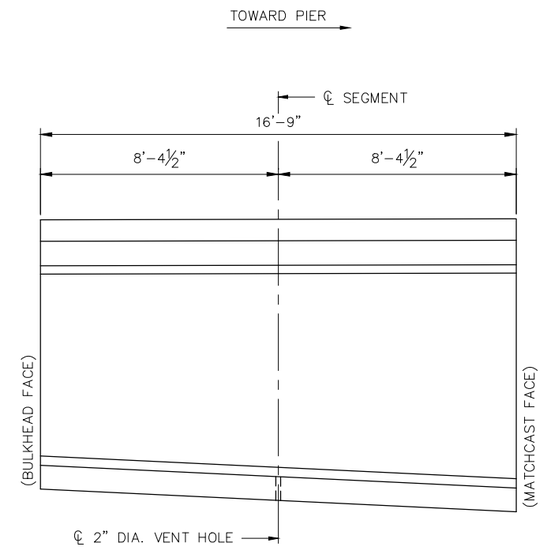

SECTION A-A

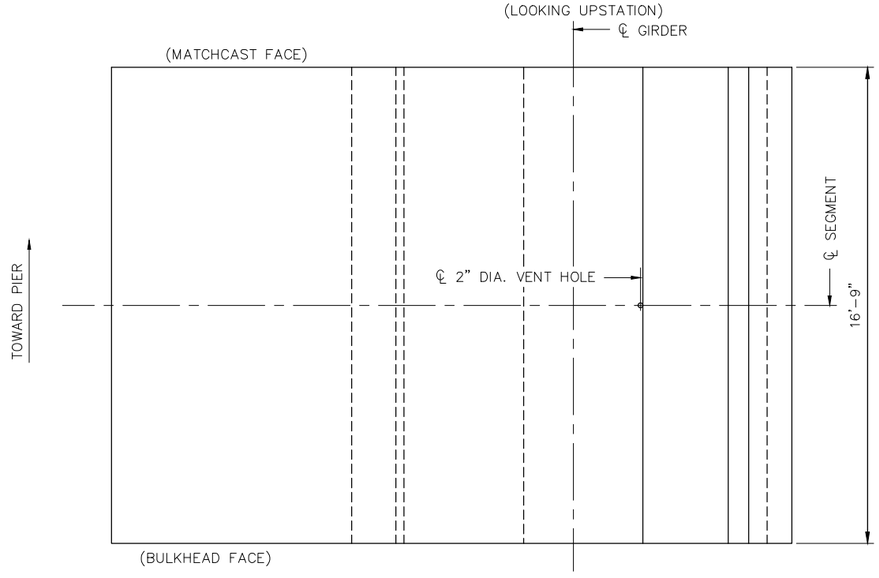

HALF PLAN-TOP SLAB

HALF PLAN-BOTTOM SLAB

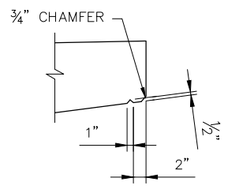

DETAIL 1

NOTES:

FOR VARYING DIMENSIONS D, T, AND W SEE "SEGMENT DESIGNATION" SHEETS, SEGMENT JOINTS ARE TRUE VERTICAL.

ALL TRANSVERSE DIMENSIONS ARE MEASURED PERPENDICULAR TO ℄ GIRDER.

LONGITUDINAL SEGMENT DIMENSIONS ARE HORIZONTAL PROJECTIONS ALONG ℄ TRACK 2.

FOR SHEAR KEY DETAILS, SEE "BULKHEAD DETAILS" SHEET.

FOR DRAIN INLET DETAILS, SEE "DRAINAGE DETAILS" SHEETS.

(1) PROVIDE VENT HOLES WITH VERMIN GUARDS, SEE "MISC. SUPERSTRUCTURE DETAILS 3" SHEET.

NO.	DATE	BY	CHECK	DESIGN	REVISION / SUBMITTAL

DESIGNED BY: ETN CHECKED BY: JWJ

DRAWN BY: JWH CHECKED BY: JWJ

AECOM

90% SUBMISSION - 01/22/16

METROPOLITAN COUNCIL

SOUTHWEST Green Line LRT Extension

CIVIL - VOLUME 4D
EXCELSIOR BLVD
BRIDGE 27C10
CANTILEVER SEGMENT DETAILS

DISCIPLINE: STRUCTURE

SHEET NAME: CBR27C10-BRG-SUP-017

SHEET 73 OF 174

Jan, 15 2016 01:26 pm V:\3400_ADC\CAD\SEGMENT E1\PLAN SHEETS\STRUCTURES\CBR27C10\CBR27C10-BRG-SUP-017.dwg By: hodgesj

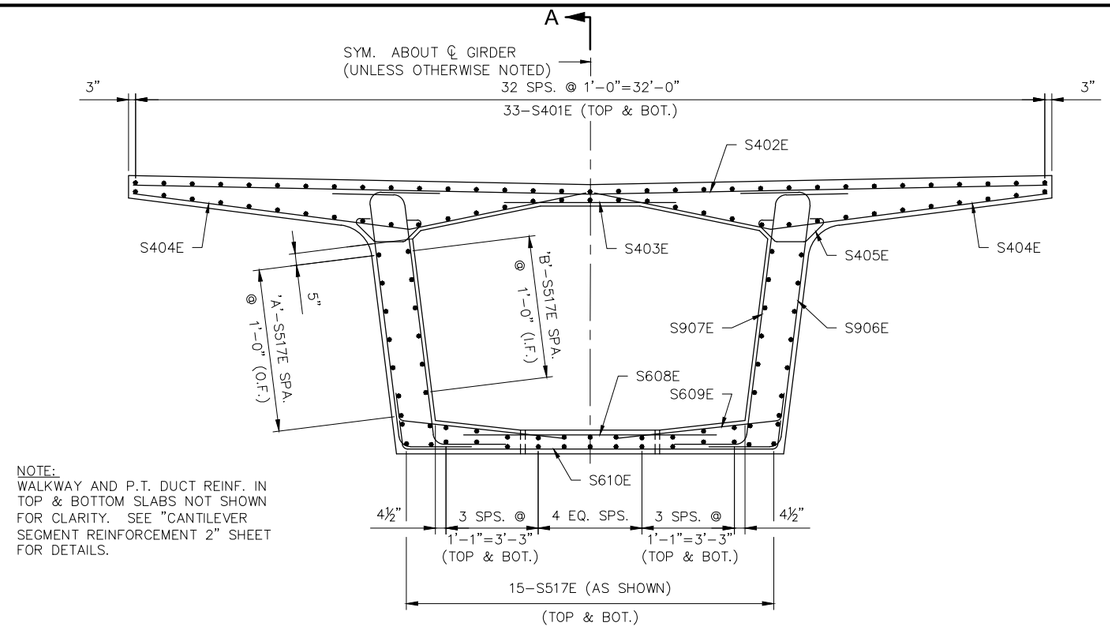

NOTE:
WALKWAY AND P.T. DUCT REINF. IN TOP & BOTTOM SLABS NOT SHOWN FOR CLARITY. SEE "CANTILEVER SEGMENT REINFORCEMENT 2" SHEET FOR DETAILS.

CROSS SECTION
(TYPICAL SEGMENT REINFORCEMENT ONLY)

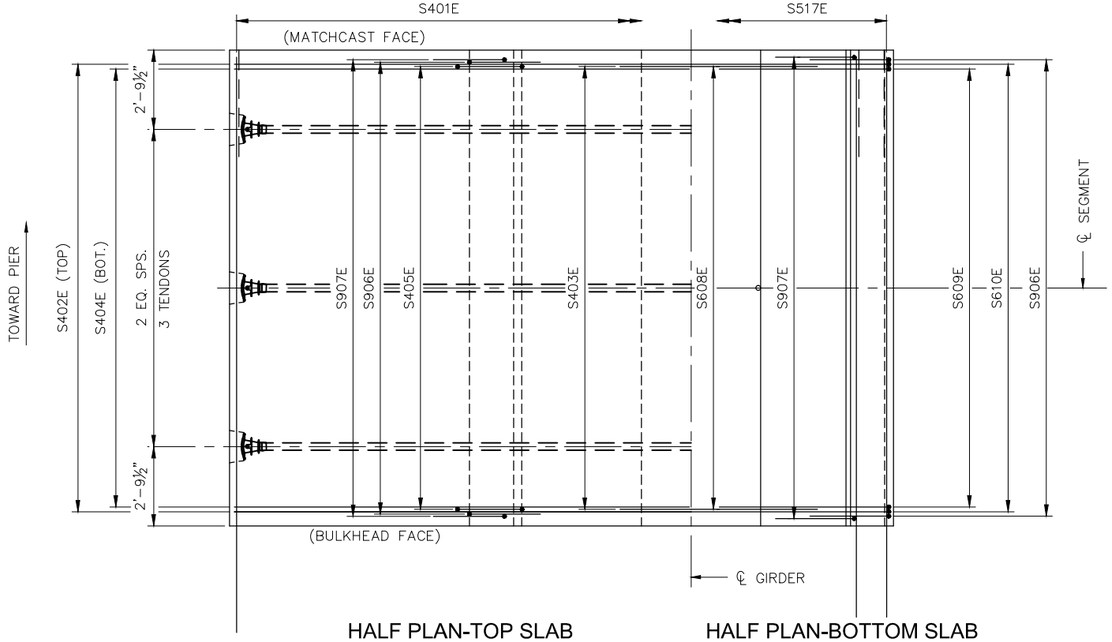

HALF PLAN-TOP SLAB
(TYPICAL SEGMENT REINFORCEMENT ONLY)

HALF PLAN-BOTTOM SLAB
(TYPICAL SEGMENT REINFORCEMENT ONLY)

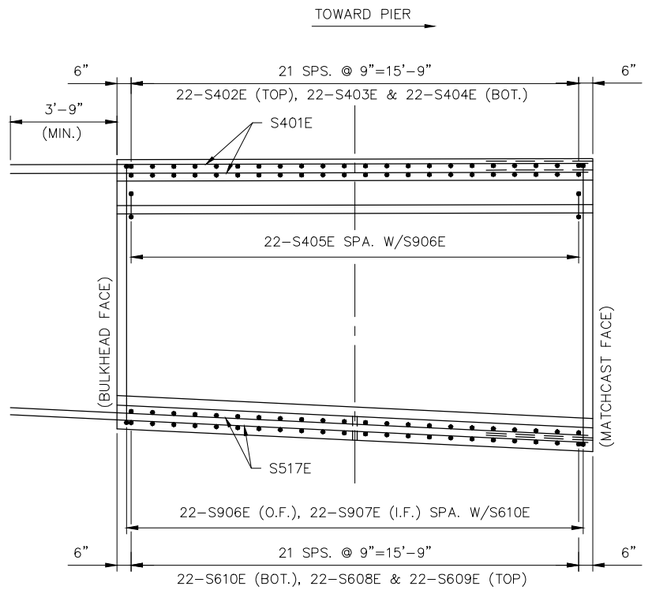

SECTION A-A
(TYPICAL SEGMENT REINFORCEMENT ONLY)

NOTES:

MIN. CONCRETE COVER = 2" EXTERIOR, 1½" INTERIOR (UNLESS OTHERWISE NOTED).

SPACE ALL REINFORCING TO CLEAR POST-TENSIONING.

FOR REINFORCING VARIABLES, SEE "CANTILEVER SEGMENT REINFORCEMENT 3" SHEET.

FOR DRAIN INLET DETAILS, SEE "DRAINAGE DETAILS" SHEETS.

FOR PLINTH REINF. DETAILS, SEE "MISC. SUPERSTRUCTURE DETAILS 3" SHEET.

I.F. DENOTES INSIDE FACE.
O.F. DENOTES OUTSIDE FACE.

NO.	DATE	BY	CHECK	DESIGN	REVISION / SUBMITTAL

DESIGNED BY: ETN | CHECKED BY: NMP
DRAWN BY: JWH | CHECKED BY: JWJ

AECOM

90% SUBMISSION - 01/22/16

METROPOLITAN COUNCIL

SOUTHWEST Green Line LRT Extension

CIVIL - VOLUME 4D
EXCELSIOR BLVD
BRIDGE 27C10
CANTILEVER SEGMENT REINFORCEMENT 1

DISCIPLINE: STRUCTURE
SHEET NAME: CBR27C10-BRG-SUP-018

SHEET 74 OF 174

Jan, 15 2016 01:28 pm v:\3400_ADC\CAD\SEGMENT E1\PLAN SHEETS\STRUCTURES\CBR27C10\CBR27C10-BRG-SUP-018.dwg By: hodgesj

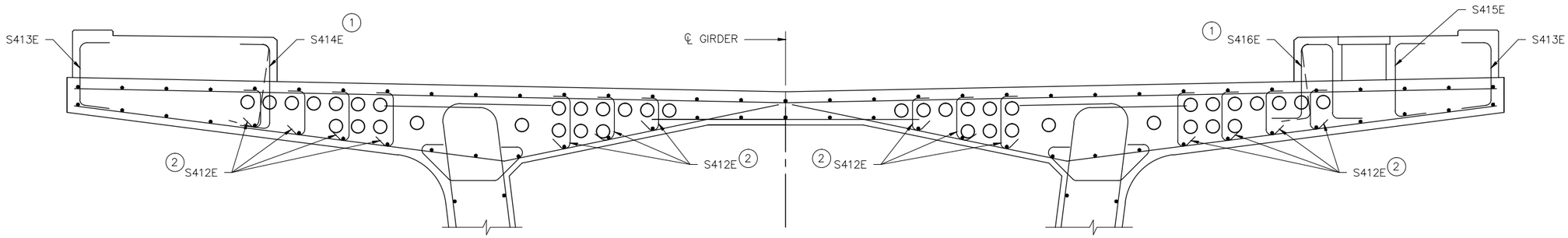

NOTES:

FOR REINFORCING VARIABLES, SEE "CANTILEVER SEGMENT REINFORCEMENT 3" SHEET.

(1) FIELD BEND S414E & S416E BARS AS NEEDED TO CLEAR POST-TENSIONING.

(2) S411E & S412E BARS SHALL BE PLACED NEAREST THE WEB FIRST, WITH ADDITIONAL BARS SPACED AWAY FROM THE WEB AS SHOWN. SPACE BARS TO AVOID DEVIATING TENDON DUCTS.

(3) S411E BARS LOCATED BELOW BOTTOM SLAB ANCHOR BLOCKS MAY BE OMITTED. TIE S411E BARS AROUND LONGITUDINAL BARS WHERE AVAILABLE, AS SHOWN.

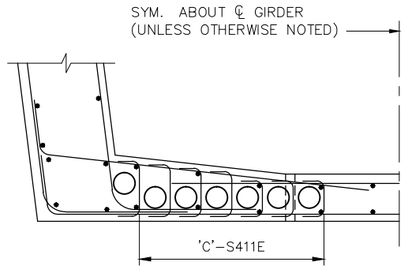

SECTION B-B

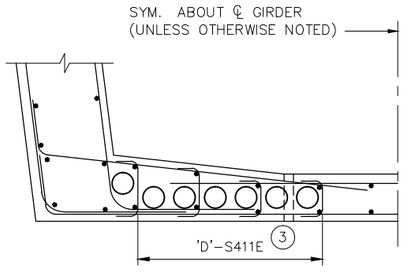

SECTION C-C

PARTIAL CROSS SECTION

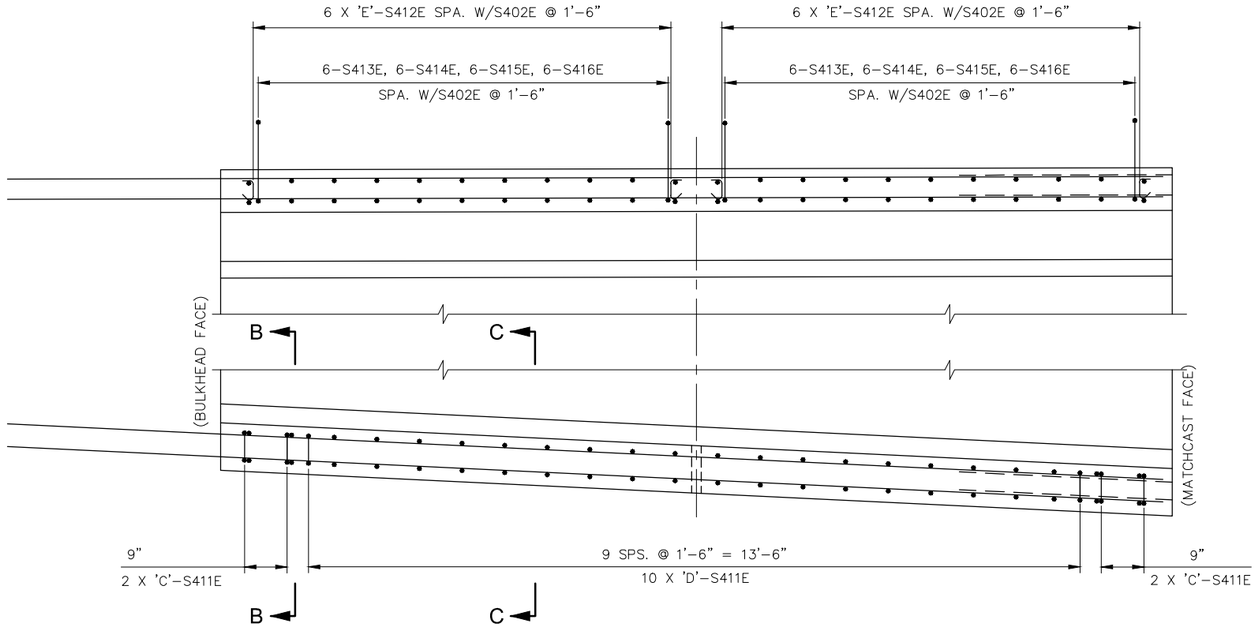

PARTIAL SECTION A-A

NO.	DATE	BY	CHECK	DESIGN	REVISION / SUBMITTAL

DESIGNED BY: ETN | CHECKED BY: NMP
DRAWN BY: JWH | CHECKED BY: JWJ

AECOM

90% SUBMISSION - 01/22/16

METROPOLITAN COUNCIL

SOUTHWEST Green Line LRT Extension

CIVIL - VOLUME 4D
EXCELSIOR BLVD
BRIDGE 27C10
CANTILEVER SEGMENT REINFORCEMENT 2

DISCIPLINE: STRUCTURE

SHEET NAME: CBR27C10-BRG-SUP-019

SHEET 75 OF 174

Jan, 15 2016 01:28 pm V:\3400_ADC\CAD\SEGMENT E1\PLAN SHEETS\STRUCTURES\CBR27C10\CBR27C10-BRG-SUP-018.dwg By: hodgesj

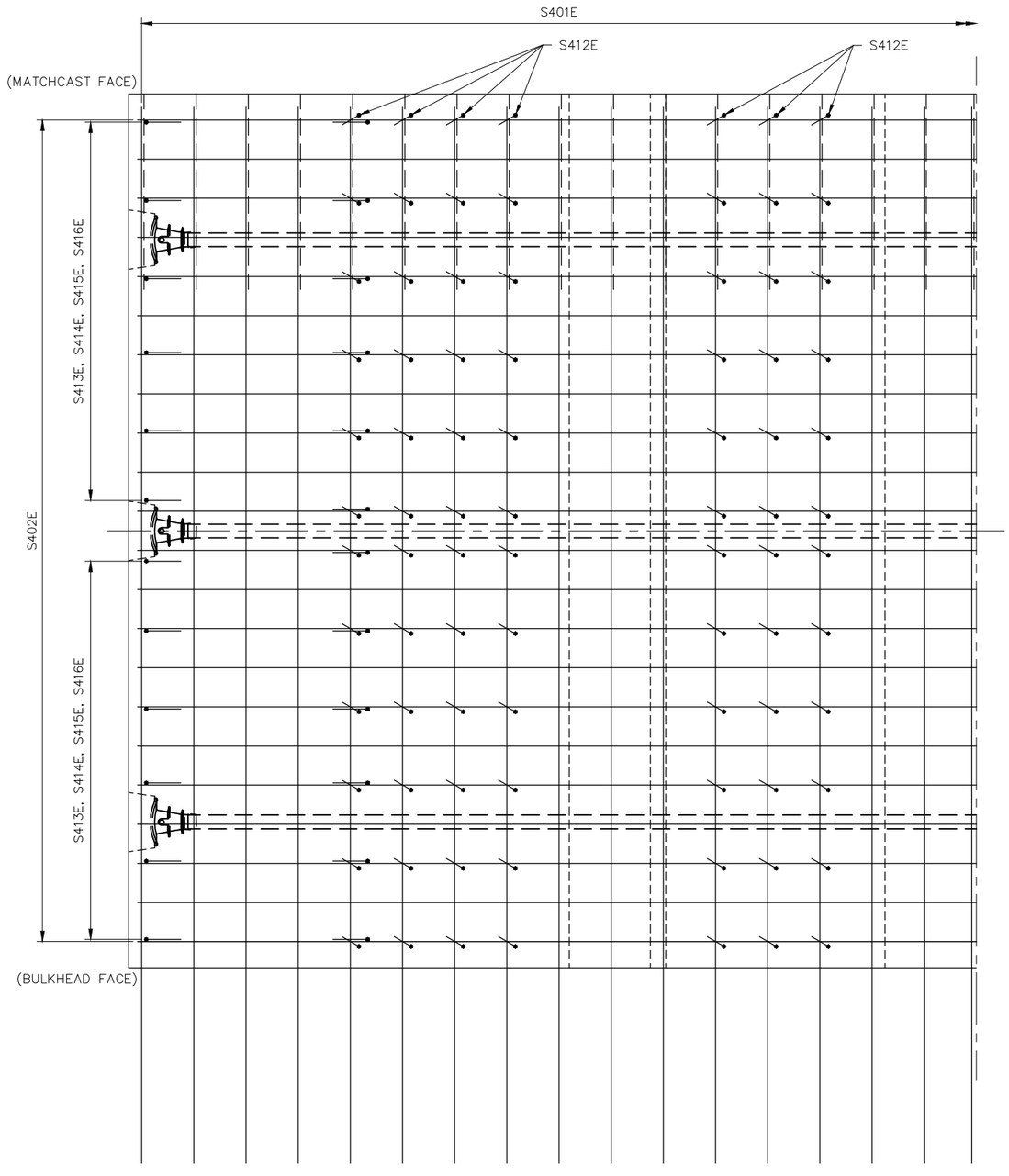

HALF PLAN - TOP SLAB

LEGEND:

2W — W=WEST CANTILEVER, E=EAST CANTILEVER; PIER NUMBER

NOTES:

WORK THIS SHEET WITH "CANTILEVER SEGMENT REINFORCEMENT 1 & 2" SHEETS.

CANTILEVER SEGMENTS REINFORCING VARIABLES

CANTILEVER 1W & 4E					
SEGMENT DESIGNATION	'A'	'B'	'C'	'D'	'E'*
1–1W, 4–1E	13	11	0	0	7
1–2W, 4–2E	11	10	0	0	7
1–3W, 4–3E	10	9	2	0	7
1–4W, 4–4E	9	7	3	2	7
1–5W, 4–5E	8	6	4	2	7
1–6W, 4–6E	7	6	5	3	5
1–7W, 4–7E	5	5	6	3	5
1–8W, 4–8E	5	5	6	3	3
1–9W, 4–9E	5	5	6	3	0

CANTILEVER 1E & 4W					
SEGMENT DESIGNATION	'A'	'B'	'C'	'D'	'E'*
1–1E, 4–1W	14	12	0	0	7
1–2E, 4–2W	12	10	0	0	7
1–3E, 4–3W	11	9	0	0	7
1–4E, 4–4W	9	8	0	0	7
1–5E, 4–5W	8	7	0	0	7
1–6E, 4–6W	7	6	2	0	5
1–7E, 4–7W	7	6	3	2	5
1–8E, 4–8W	5	5	4	2	5
1–9E, 4–9W	5	5	4	2	0

CANTILEVER 2W & 3E					
SEGMENT DESIGNATION	'A'	'B'	'C'	'D'	'E'*
2–1W, 3–1E	16	13	0	0	7
2–2W, 3–2E	14	12	0	0	7
2–3W, 3–3E	12	10	0	0	7
2–4W, 3–4E	10	9	0	0	7
2–5W, 3–5E	9	8	0	0	7
2–6W, 3–6E	8	7	0	0	7
2–7W, 3–7E	7	6	2	0	5
2–8W, 3–8E	5	5	3	2	5
2–9W, 3–9E	5	5	4	2	5
2–10W, 3–10E	5	5	4	2	0

CANTILEVER 2E & 3W					
SEGMENT DESIGNATION	'A'	'B'	'C'	'D'	'E'*
2–1E, 3–1W	15	13	0	0	7
2–2E, 3–2W	13	11	0	0	7
2–3E, 3–3W	12	10	0	0	7
2–4E, 3–4W	10	9	1	0	7
2–5E, 3–5W	9	8	2	2	7
2–6E, 3–6W	8	7	3	2	7
2–7E, 3–7W	7	6	5	3	5
2–8E, 3–8W	6	6	7	4	5
2–9E, 3–9W	5	5	7	4	3
2–10E, 3–10W	5	5	7	4	0

* REMOVE ONE S412E BAR EACH SIDE OF WEB WITH EACH REDUCTION IN QUANTITY VARIABLE 'E'.

NO.	DATE	BY	CHECK	DESIGN	REVISION / SUBMITTAL

DESIGNED BY: ETN | CHECKED BY: NMP
DRAWN BY: JWH | CHECKED BY: JWJ

AECOM

90% SUBMISSION - 01/22/16

METROPOLITAN COUNCIL

SOUTHWEST Green Line LRT Extension

CIVIL - VOLUME 4D
EXCELSIOR BLVD
BRIDGE 27C10
CANTILEVER SEGMENT REINFORCEMENT 3

DISCIPLINE: STRUCTURE

SHEET NAME: CBR27C10-BRG-SUP-020

SHEET 76 OF 174

Jan, 15 2016 01:28 pm v:\3400_ADC\CAD\SEGMENT E1\PLAN SHEETS\STRUCTURES\CBR27C10\CBR27C10-BRG-SUP-018.dwg By: hodgesj

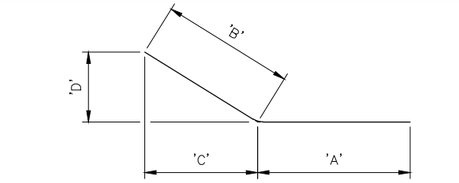

BAR	'A'	'B'	'C'	'D'
S402E	16'–1"	16'–1"	16'–0⅞"	7¾"
S404E	9'–9"	6'–0"	5'–8⅛"	1'–11⅜"
S609E	5'–9"	1'–0"	2¾"	11⅝"

S402E, S404E, S609E

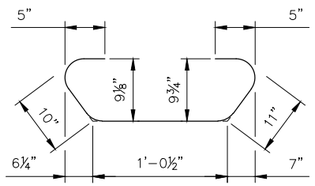

S405E

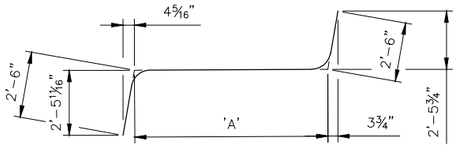

CANTILEVER 1W & 4E	
'A'	VARIES FROM 7'–9½" TO 15'–4½"
CANTILEVER 1E & 4W	
'A'	VARIES FROM 7'–9½" TO 16'–3"
CANTILEVER 2W & 3E	
'A'	VARIES FROM 7'–9½" TO 18'–1½"
CANTILEVER 2E & 3W	
'A'	VARIES FROM 7'–9½" TO 17'–4"

S907E

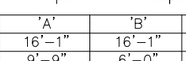

CANTILEVER 1W & 4E	
'A'	VARIES FROM 9'–7" TO 8'–1"
CANTILEVER 1E & 4W	
'A'	VARIES FROM 9'–7" TO 7'–11"
CANTILEVER 2W & 3E	
'A'	VARIES FROM 9'–7" TO 7'–6"
CANTILEVER 2E & 3W	
'A'	VARIES FROM 9'–7" TO 7'–7"

S608E

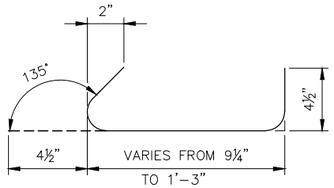

S412E

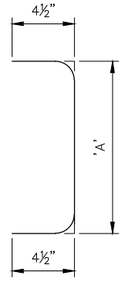

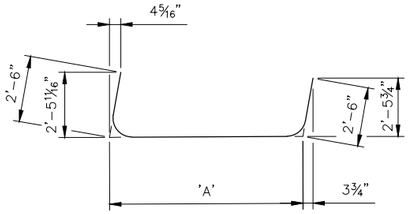

CANTILEVER 1W & 4E	
'A'	VARIES FROM 6½" TO 1'–6½"
CANTILEVER 1E & 4W	
'A'	VARIES FROM 8" TO 1'–0½"
CANTILEVER 2W & 3E	
'A'	VARIES FROM 8" TO 11"
CANTILEVER 2E & 3W	
'A'	VARIES FROM 6½" TO 1'–5"

S411E

CANTILEVER 1W & 4E	
'A'	VARIES FROM 7'–10" TO 15'–4½"
CANTILEVER 1E & 4W	
'A'	VARIES FROM 7'–10" TO 16'–3½"
CANTILEVER 2W & 3E	
'A'	VARIES FROM 7'–10" TO 18'–1½"
CANTILEVER 2E & 3W	
'A'	VARIES FROM 7'–10" TO 17'–4½"

S906E

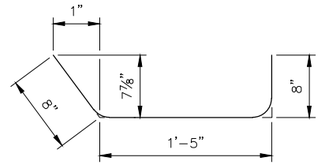

S413E

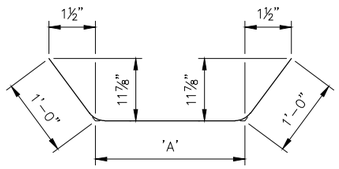

CANTILEVER 1W & 4E	
'A'	VARIES FROM 13'–8½" TO 11'–8½"
CANTILEVER 1E & 4W	
'A'	VARIES FROM 13'–8½" TO 11'–7"
CANTILEVER 2W & 3E	
'A'	VARIES FROM 13'–8½" TO 11'–1½"
CANTILEVER 2E & 3W	
'A'	VARIES FROM 13'–8½" TO 11'–4"

S610E

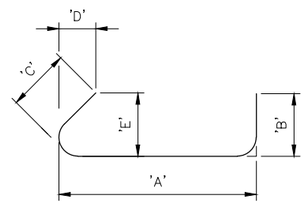

BAR	'A'	'B'	'C'	'D'	'E'
S414E	1'–11"	8"	8"	¾"	8⅛"
S415E	1'–8"	8"	8"	¾"	8⅛"

S414E, S415E

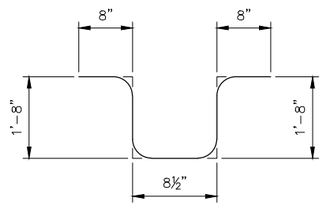

S416E

BILL OF REINFORCEMENT CANTILEVER 1W & 4E (ONE CANTILEVER ONLY)

BAR	NO.	LENGTH	SHAPE	LOCATION
S401E	594	20'–6"	STR.	LONGITUDINAL
S402E	198	32'–2"		TOP SLAB
S403E	198	5'–0"	STR.	TOP SLAB
S404E	396	15'–9"		TOP SLAB
S405E	396	3'–9"		TOP SLAB
S906E	396	16'–8" *		WEB
S907E	396	16'–7" *		WEB
S608E	198	8'–10" *	STR.	BOTTOM SLAB
S609E	396	6'–9"		BOTTOM SLAB
S610E	198	14'–9" *		BOTTOM SLAB
S411E	576	1'–10" *		BOTTOM SLAB
S412E	1152	1'–9" *		TOP SLAB
S413E	216	2'–9"		WALKWAY
S414E	108	3'–2"		WALKWAY
S415E	108	2'–11"		WALKWAY
S416E	108	5'–5"		WALKWAY
S517E	544	20'–6"	STR.	LONGITUDINAL

* DENOTES AVERAGE LENGTH.

BILL OF REINFORCEMENT CANTILEVER 2W & 3E (ONE CANTILEVER ONLY)

BAR	NO.	LENGTH	SHAPE	LOCATION
S401E	660	20'–6"	STR.	LONGITUDINAL
S402E	220	32'–2"		TOP SLAB
S403E	220	5'–0"	STR.	TOP SLAB
S404E	440	15'–9"		TOP SLAB
S405E	440	3'–9"		TOP SLAB
S906E	440	18'–0" *		WEB
S907E	440	18'–0" *		WEB
S608E	220	8'–7" *	STR.	BOTTOM SLAB
S609E	440	6'–9"		BOTTOM SLAB
S610E	220	14'–5" *		BOTTOM SLAB
S411E	224	1'–7" *		BOTTOM SLAB
S412E	1368	1'–9" *		TOP SLAB
S413E	240	2'–9"		WALKWAY
S414E	120	3'–2"		WALKWAY
S415E	120	2'–11"		WALKWAY
S416E	120	5'–5"		WALKWAY
S517E	642	20'–6"	STR.	LONGITUDINAL

* DENOTES AVERAGE LENGTH.

BILL OF REINFORCEMENT CANTILEVER 1E & 4W (ONE CANTILEVER ONLY)

BAR	NO.	LENGTH	SHAPE	LOCATION
S401E	594	20'–6"	STR.	LONGITUDINAL
S402E	198	32'–2"		TOP SLAB
S403E	198	5'–0"	STR.	TOP SLAB
S404E	396	15'–9"		TOP SLAB
S405E	396	3'–9"		TOP SLAB
S906E	396	17'–1" *		WEB
S907E	396	17'–1" *		WEB
S608E	198	8'–9" *	STR.	BOTTOM SLAB
S609E	396	6'–9"		BOTTOM SLAB
S610E	198	14'–8" *		BOTTOM SLAB
S411E	224	1'–8" *		BOTTOM SLAB
S412E	1200	1'–9" *		TOP SLAB
S413E	216	2'–9"		WALKWAY
S414E	108	3'–2"		WALKWAY
S415E	108	2'–11"		WALKWAY
S416E	108	5'–5"		WALKWAY
S517E	562	20'–6"	STR.	LONGITUDINAL

* DENOTES AVERAGE LENGTH.

BILL OF REINFORCEMENT CANTILEVER 2E & 3W (ONE CANTILEVER ONLY)

BAR	NO.	LENGTH	SHAPE	LOCATION
S401E	660	20'–6"	STR.	LONGITUDINAL
S402E	220	32'–2"		TOP SLAB
S403E	220	5'–0"	STR.	TOP SLAB
S404E	440	15'–9"		TOP SLAB
S405E	440	3'–9"		TOP SLAB
S906E	440	17'–8" *		WEB
S907E	440	17'–7" *		WEB
S608E	220	8'–7" *	STR.	BOTTOM SLAB
S609E	440	6'–9"		BOTTOM SLAB
S610E	220	14'–7" *		BOTTOM SLAB
S411E	636	1'–9" *		BOTTOM SLAB
S412E	1320	1'–9" *		TOP SLAB
S413E	240	2'–9"		WALKWAY
S414E	120	3'–2"		WALKWAY
S415E	120	2'–11"		WALKWAY
S416E	120	5'–5"		WALKWAY
S517E	640	20'–6"	STR.	LONGITUDINAL

* DENOTES AVERAGE LENGTH.

LEGEND

S 4 07 E

- S = SUPERSTRUCTURE
- 4 = BAR SIZE
- 07 = BAR DESIGNATION
- E = EPOXY
- S = STAINLESS STEEL
- BLANK FOR BLACK BAR

NO.	DATE	BY	CHECK	DESIGN	REVISION / SUBMITTAL

DESIGNED BY: ETN | CHECKED BY: NMP
DRAWN BY: JWH | CHECKED BY: JWJ

AECOM

90% SUBMISSION - 01/22/16

METROPOLITAN COUNCIL

SOUTHWEST Green Line LRT Extension

CIVIL - VOLUME 4D
EXCELSIOR BLVD
BRIDGE 27C10
CANTILEVER SEGMENT REINFORCEMENT 4

DISCIPLINE: STRUCTURE

SHEET NAME: CBR27C10-BRG-SUP-021

SHEET 77 OF 174

Jan, 15 2016 01:28 pm V:\3400_ADC\CAD\SEGMENT E1\PLAN SHEETS\STRUCTURES\CBR27C10\CBR27C10-BRG-SUP-018.dwg By: hodgesj

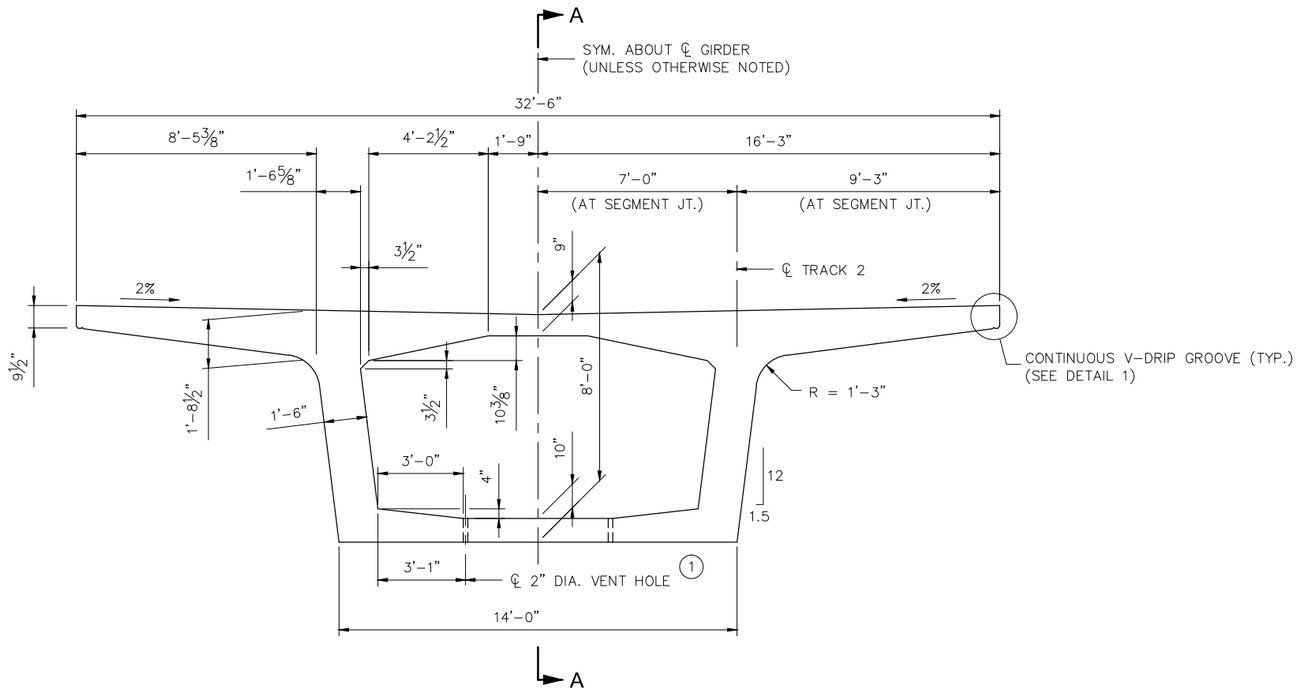

CROSS SECTION
(LOOKING UPSTATION)

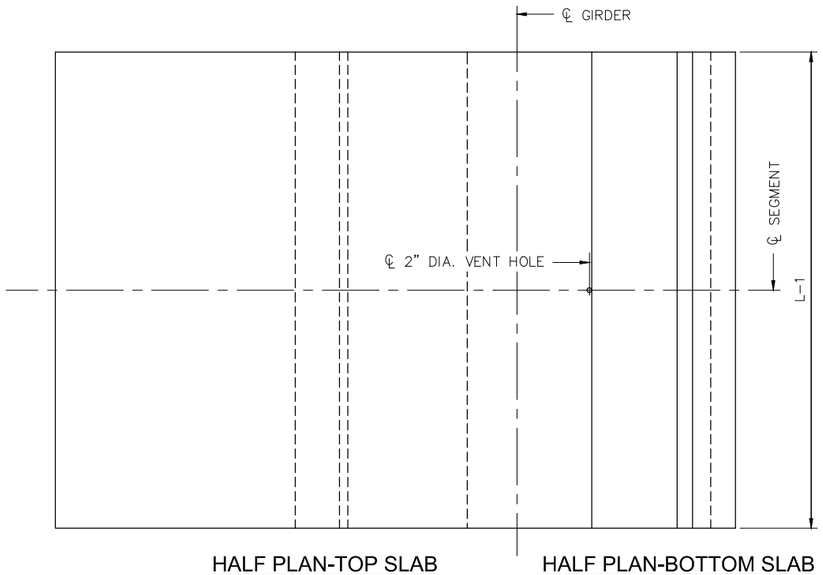

HALF PLAN-TOP SLAB HALF PLAN-BOTTOM SLAB

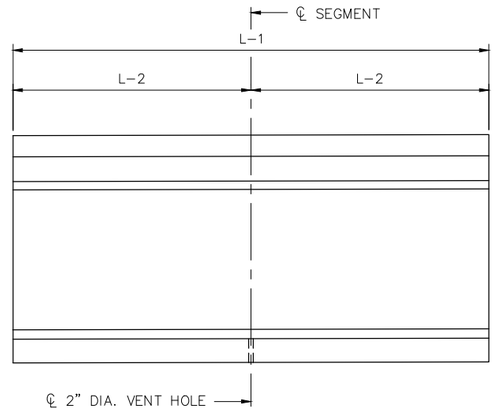

SECTION A-A

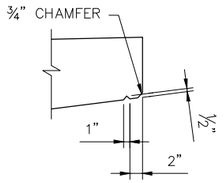

DETAIL 1

SEGMENT	L-1	L-2
1-CS & 5-CS	8'-0"	4'-0"
2-CS & 4-CS	5'-9"	2'-10½"
3-CS	13'-0"	6'-6"

NOTES:

SEGMENT JOINTS ARE TRUE VERTICAL.

ALL TRANSVERSE DIMENSIONS ARE MEASURED PERPENDICULAR TO ℄ GIRDER.

LONGITUDINAL SEGMENT DIMENSIONS ARE HORIZONTAL PROJECTIONS ALONG ℄ TRACK 2.

(1) PROVIDE VENT HOLES WITH VERMIN GUARDS, SEE "MISC. SUPERSTRUCTURE DETAILS 3" SHEET.

NO.	DATE	BY	CHECK	DESIGN	REVISION / SUBMITTAL

DESIGNED BY: ETN CHECKED BY: JWJ
DRAWN BY: JWH CHECKED BY: JWJ

AECOM

90% SUBMISSION - 01/22/16

METROPOLITAN COUNCIL

SOUTHWEST Green Line LRT Extension

CIVIL - VOLUME 4D
EXCELSIOR BLVD
BRIDGE 27C10
CLOSURE SEGMENT DETAILS

DISCIPLINE: STRUCTURE

SHEET NAME: CBR27C10-BRG-SUP-022

SHEET 78 OF 174

Jan, 15 2016 01:30 pm v:\3400_ADC\CAD\SEGMENT E1\PLAN SHEETS\STRUCTURES\CBR27C10\CBR27C10-BRG-SUP-022.dwg By: hodgesj

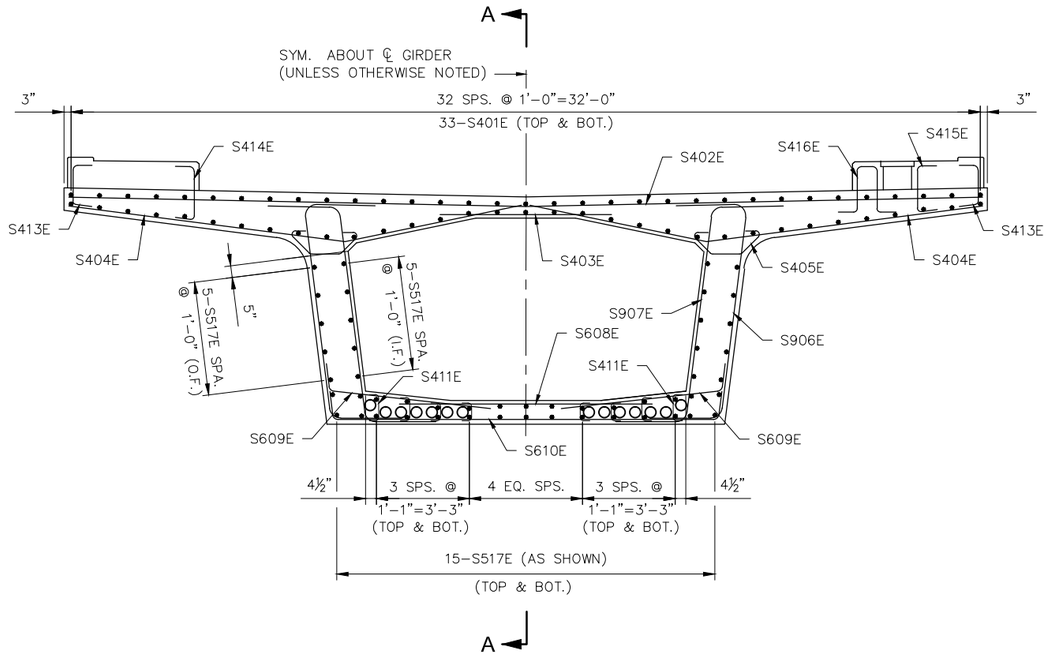

CROSS SECTION
(13'-0" SEGMENT SHOWN)

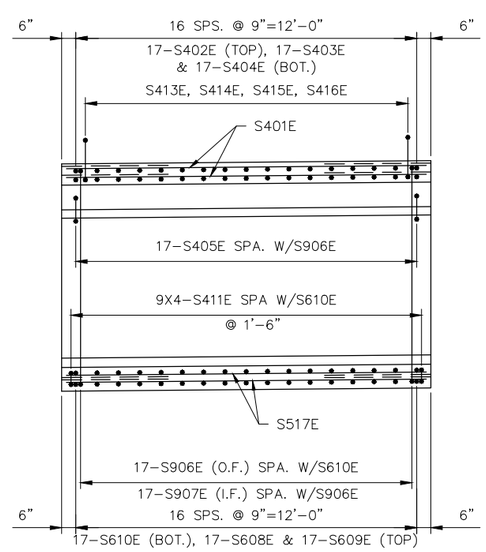

SECTION A-A
(13'-0" SEGMENT)

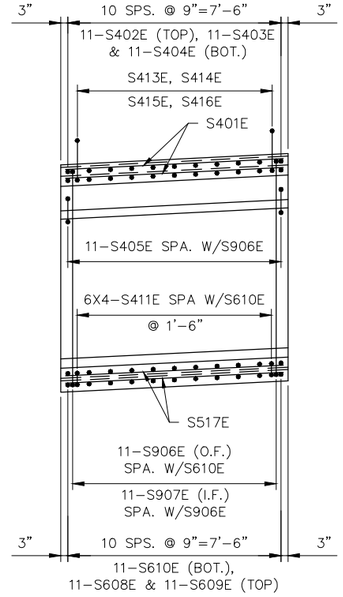

SECTION A-A
(8'-0" SEGMENT)

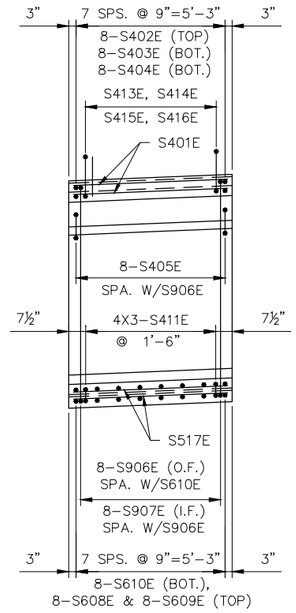

SECTION A-A
(5'-9" SEGMENT)

NOTES:

MIN. CONCRETE COVER = 2" EXTERIOR, 1½" INTERIOR (UNLESS OTHERWISE NOTED).

SPACE ALL REINFORCING TO CLEAR POST-TENSIONING.

FOR PLINTH REINF. DETAILS, SEE "MISC. SUPERSTRUCTURE DETAILS 3" SHEET.

I.F. DENOTES INSIDE FACE.
O.F. DENOTES OUTSIDE FACE.

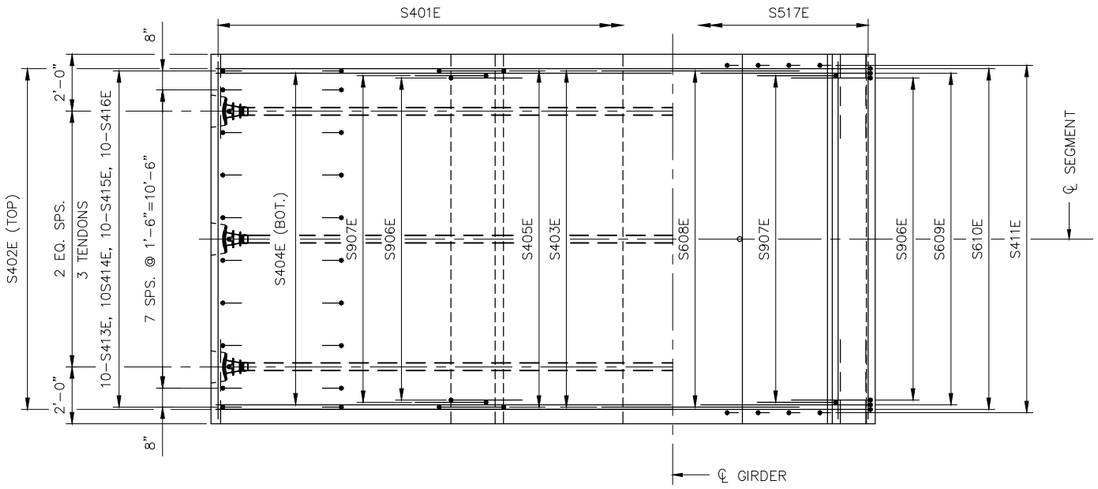

HALF PLAN-TOP SLAB
(13'-0" SEGMENT)

HALF PLAN-BOTTOM SLAB
(13'-0" SEGMENT)

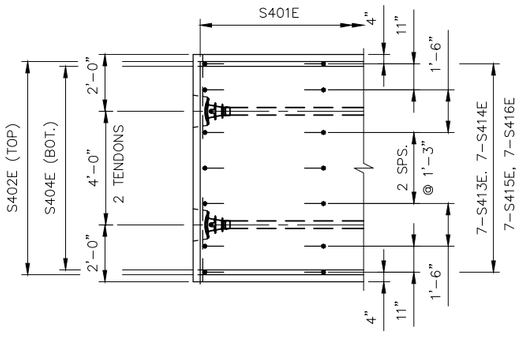

PARTIAL TOP SLAB
(8'-0" SEGMENT)

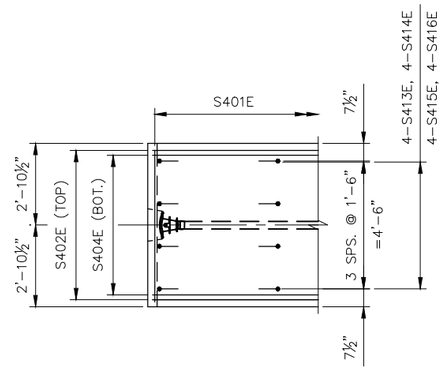

PARTIAL TOP SLAB
(5'-9" SEGMENT)

NO.	DATE	BY	CHECK	DESIGN	REVISION / SUBMITTAL

DESIGNED BY: ETN | CHECKED BY: NMP
DRAWN BY: JWH | CHECKED BY: JWJ

AECOM

90% SUBMISSION - 01/22/16

METROPOLITAN COUNCIL

SOUTHWEST Green Line LRT Extension

CIVIL - VOLUME 4D
EXCELSIOR BLVD
BRIDGE 27C10
CLOSURE SEGMENT REINFORCEMENT 1

DISCIPLINE: STRUCTURE
SHEET NAME: CBR27C10-BRG-SUP-023

SHEET 79 OF 174

Jan, 15 2016 01:33 pm V:\3400_ADC\CAD\SEGMENT E1\PLAN SHEETS\STRUCTURES\CBR27C10\CBR27C10-BRG-SUP-023.dwg By: hodgesj

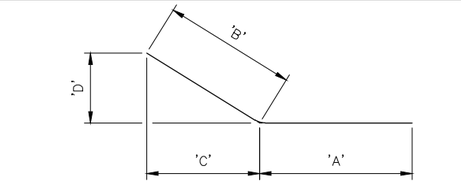

BAR	'A'	'B'	'C'	'D'
S402E	16'–1"	16'–1"	16'–0⅞"	7¾"
S404E	9'–9"	6'–0"	5'–8⅛"	1'–11⅜"
S609E	5'–9"	1'–0"	2¾"	11⅝"

S402E, S404E, S609E

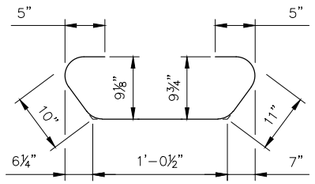

S405E

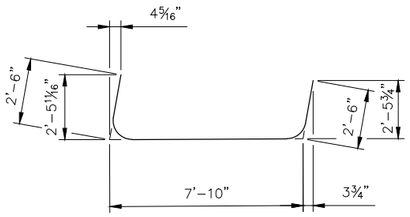

S906E

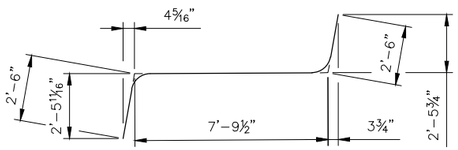

S907E

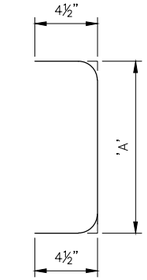

13'–0" SEGMENT	
'A'	VARIES FROM 6½" TO 10"
8'–0" SEGMENT	
'A'	VARIES FROM 6½" TO 10"
5'–9" SEGMENT	
'A'	VARIES FROM 6½" TO 10"

S411E

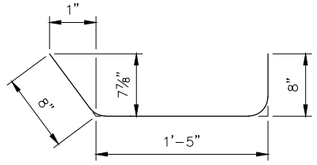

S413E

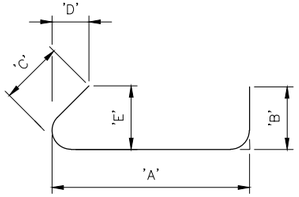

BAR	'A'	'B'	'C'	'D'	'E'
S414E	1'–11"	8"	8"	¾"	8⅛"
S415E	1'–8"	8"	8"	¾"	8⅛"

S414E, S415E

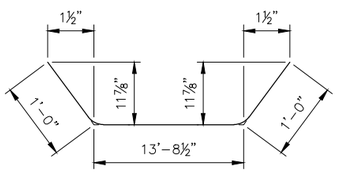

S610E

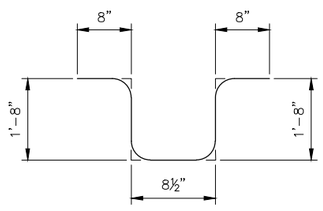

S416E

BILL OF REINFORCEMENT 13'-0" CLOSURE SEGMENT (ONE SEGMENT ONLY)

BAR	NO.	LENGTH	SHAPE	LOCATION
S401E	66	12'–6"	STR.	LONGITUDINAL
S402E	17	32'–2"		TOP SLAB
S403E	17	5'–0"	STR.	TOP SLAB
S404E	34	15'–9"		TOP SLAB
S405E	34	3'–9"		TOP SLAB
S906E	34	12'–10"		WEB
S907E	34	12'–10"		WEB
S608E	17	9'–7"	STR.	BOTTOM SLAB
S609E	34	6'–9"		BOTTOM SLAB
S610E	17	15'–9"		BOTTOM SLAB
S411E	72	1'–6" *		BOTTOM SLAB
S413E	20	2'–9"		WALKWAY
S414E	10	3'–2"		WALKWAY
S415E	10	2'–11"		WALKWAY
S416E	10	5'–5"		WALKWAY
S517E	50	12'–6"	STR.	LONGITUDINAL

* DENOTES AVERAGE LENGTH

BILL OF REINFORCEMENT 8'-0" CLOSURE SEGMENT (ONE SEGMENT ONLY)

BAR	NO.	LENGTH	SHAPE	LOCATION
S401E	66	7'–6"	STR.	LONGITUDINAL
S402E	11	32'–2"		TOP SLAB
S403E	11	5'–0"	STR.	TOP SLAB
S404E	22	15'–9"		TOP SLAB
S405E	22	3'–9"		TOP SLAB
S906E	22	12'–10"		WEB
S907E	22	12'–10"		WEB
S608E	11	9'–7"	STR.	BOTTOM SLAB
S609E	22	6'–9"		BOTTOM SLAB
S610E	11	15'–9"		BOTTOM SLAB
S411E	48	1'–6" *		BOTTOM SLAB
S413E	14	2'–9"		WALKWAY
S414E	7	3'–2"		WALKWAY
S415E	7	2'–11"		WALKWAY
S416E	7	5'–5"		WALKWAY
S517E	50	7'–6"	STR.	LONGITUDINAL

* DENOTES AVERAGE LENGTH

BILL OF REINFORCEMENT 5'-9" CLOSURE SEGMENT (ONE SEGMENT ONLY)

BAR	NO.	LENGTH	SHAPE	LOCATION
S401E	66	5'–3"	STR.	LONGITUDINAL
S402E	8	32'–2"		TOP SLAB
S403E	8	5'–0"	STR.	TOP SLAB
S404E	16	15'–9"		TOP SLAB
S405E	16	3'–9"		TOP SLAB
S906E	16	12'–10"		WEB
S907E	16	12'–10"		WEB
S608E	8	9'–7"	STR.	BOTTOM SLAB
S609E	16	6'–9"		BOTTOM SLAB
S610E	8	15'–9"		BOTTOM SLAB
S411E	24	1'–6" *		BOTTOM SLAB
S413E	8	2'–9"		WALKWAY
S414E	4	3'–2"		WALKWAY
S415E	4	2'–11"		WALKWAY
S416E	4	5'–5"		WALKWAY
S517E	50	5'–3"	STR.	LONGITUDINAL

* DENOTES AVERAGE LENGTH

LEGEND

S 4 07 E

SUPERSTRUCTURE

E = EPOXY
S = STAINLESS STEEL
BLANK FOR BLACK BAR

NO.	DATE	BY	CHECK	DESIGN	REVISION / SUBMITTAL

DESIGNED BY: ETN | CHECKED BY: NMP
DRAWN BY: JWH | CHECKED BY: JWJ

AECOM

90% SUBMISSION - 01/22/16

METROPOLITAN COUNCIL

SOUTHWEST Green Line LRT Extension

CIVIL - VOLUME 4D
EXCELSIOR BLVD
BRIDGE 27C10
CLOSURE SEGMENT REINFORCEMENT 2

DISCIPLINE: STRUCTURE
SHEET NAME: CBR27C10-BRG-SUP-024

SHEET 80 OF 174

Jan, 15 2016 01:33 pm V:\3400_ADC\CAD\SEGMENT E1\PLAN SHEETS\STRUCTURES\CBR27C10\CBR27C10-BRG-SUP-023.dwg By: hodgesj

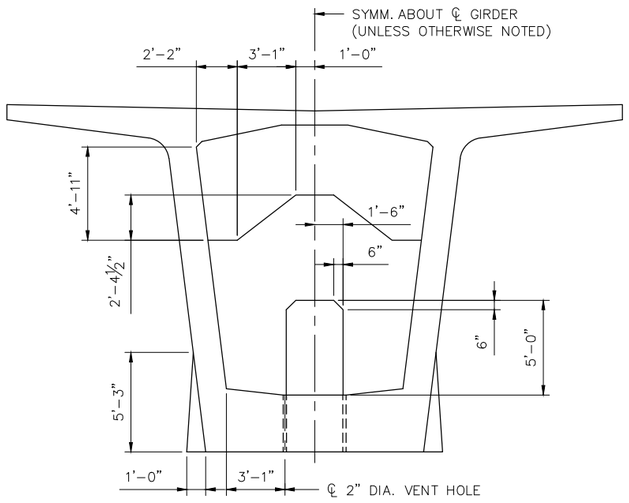

SECTION A-A

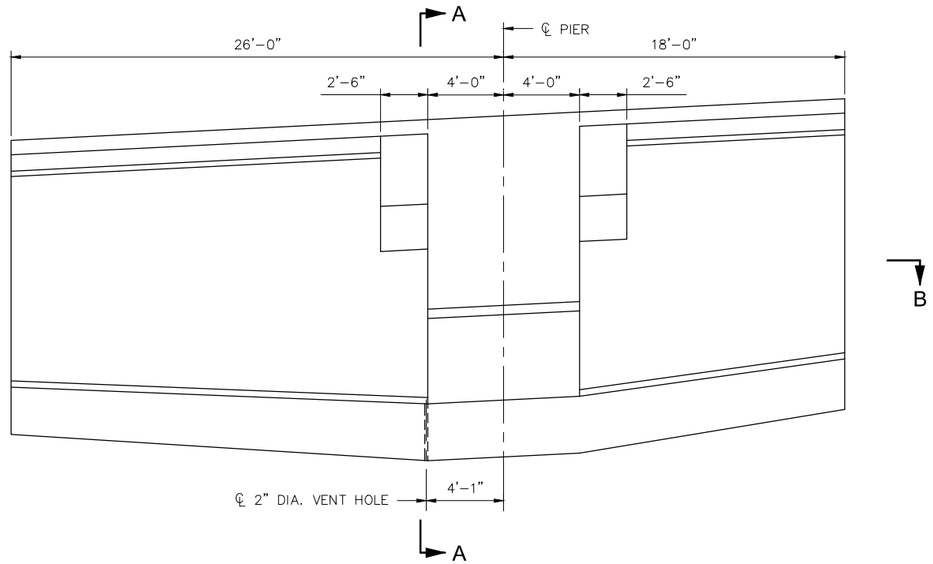

SECTION C-C

NOTES:

FOR TYPICAL DIMENSIONS NOT SHOWN SEE "CANTILEVER SEGMENT DETAILS" SHEET.

PIER TABLE 1 SHOWN, PIER TABLE 4 SIMILAR.

(1) 8"ø HOLE FOR DRAIN PIPE IS TO BE LOCATED ON THE LEFT SIDE OF THE GIRDER LOOKING UPSTATION & UPSTATION OF THE ℄ PIER FOR PIER TABLES 1 AND 4.

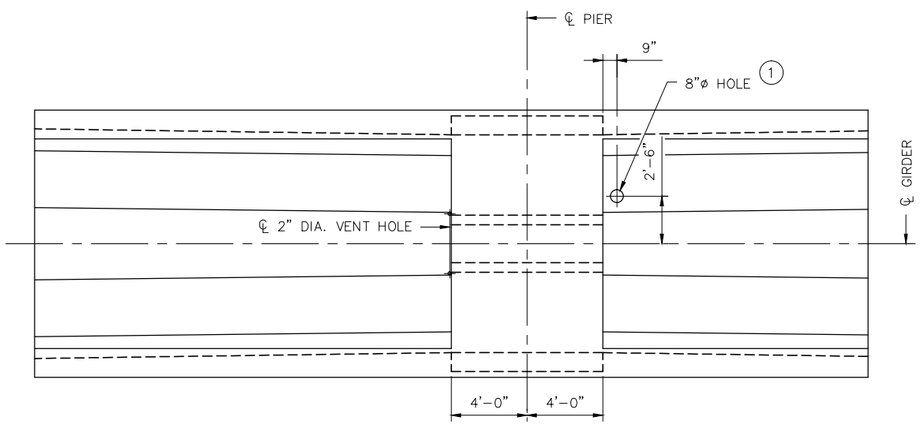

SECTION B-B

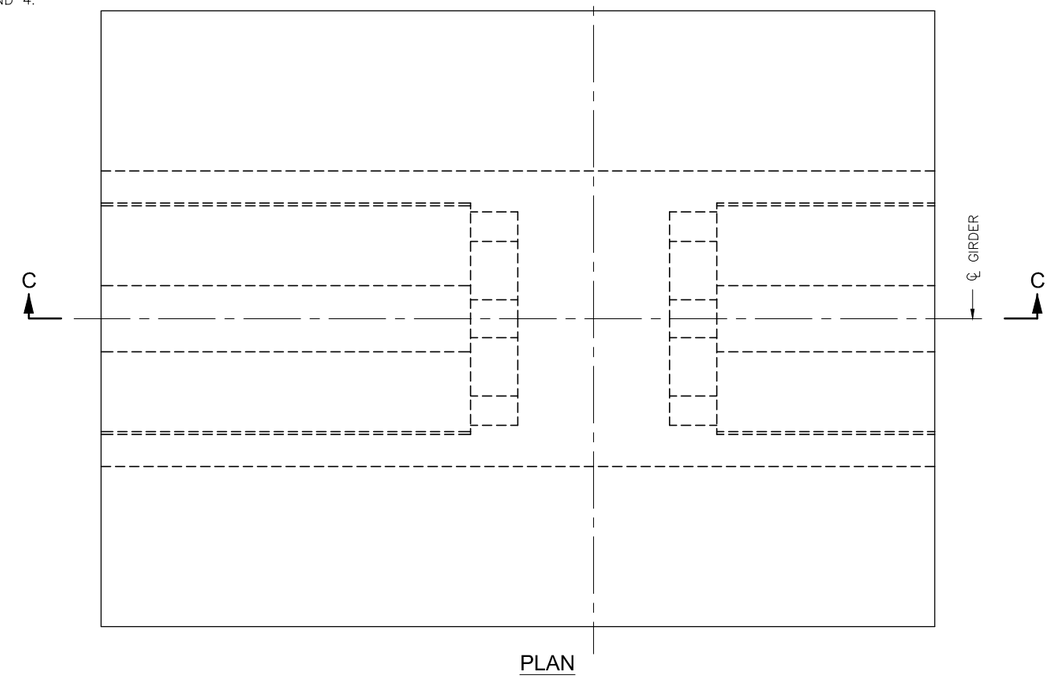

PLAN

NO.	DATE	BY	CHECK	DESIGN	REVISION / SUBMITTAL

DESIGNED BY: ETN CHECKED BY: JWJ
DRAWN BY: JWH CHECKED BY: JL

AECOM

90% SUBMISSION - 01/22/16

METROPOLITAN COUNCIL

SOUTHWEST Green Line LRT Extension

CIVIL - VOLUME 4D
EXCELSIOR BLVD
BRIDGE 27C10
PIER TABLES 1 & 4 DETAILS

DISCIPLINE: STRUCTURE

SHEET NAME: CBR27C10-BRG-SUP-025

SHEET 81 OF 174

Jan, 18 2016 01:35 pm C:\Users\Hodgesj\appdata\local\temp\AcPublish_3644\CBR27C10-BRG-SUP-025.dwg By: hodgesj

DETAILS REMAIN IN DEVELOPMENT

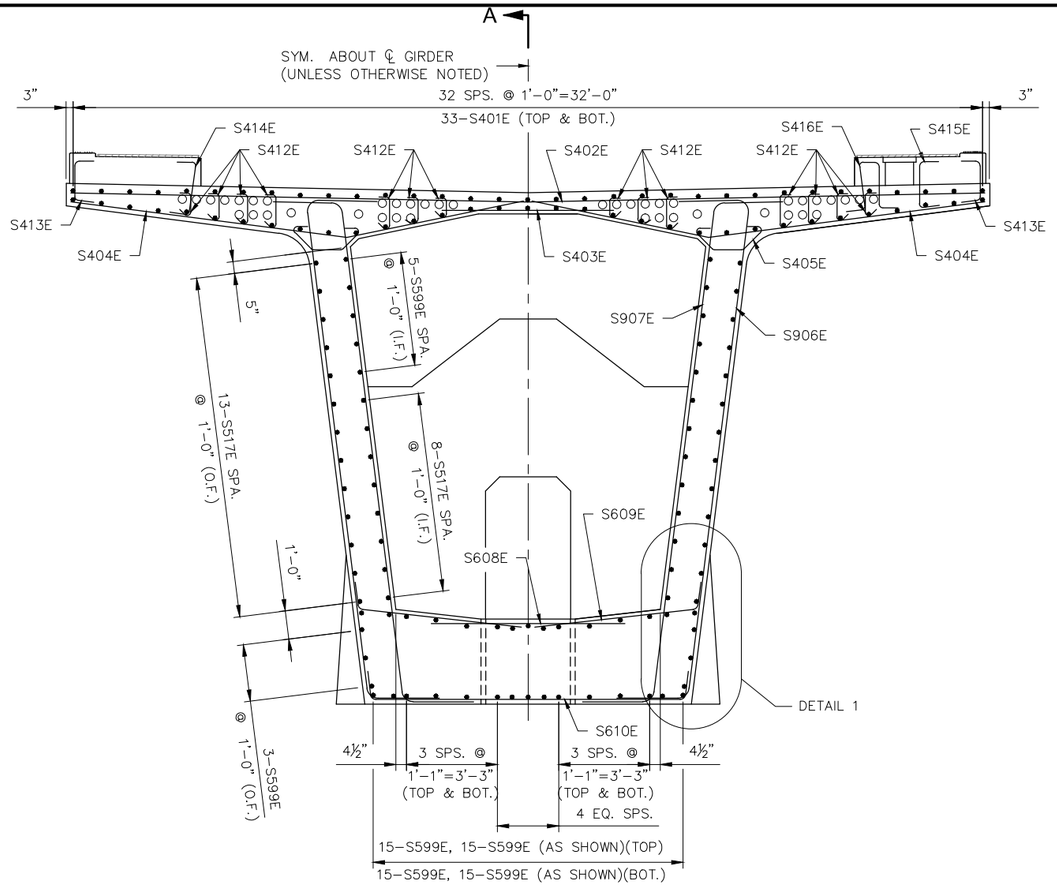

A

CROSS SECTION

(TYPICAL SEGMENT REINFORCEMENT ONLY)

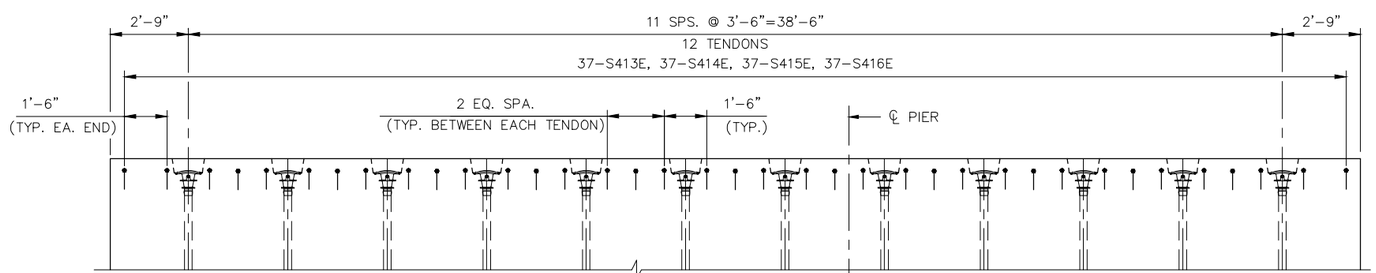

PARTIAL PLAN

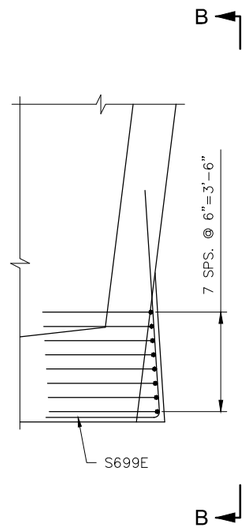

DETAIL 1

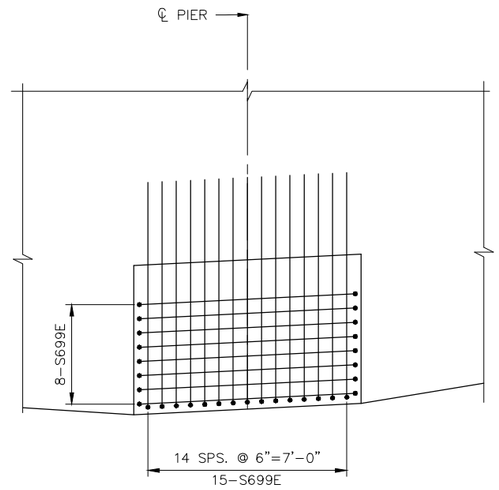

VIEW B-B

NO.	DATE	BY	CHECK	DESIGN	REVISION / SUBMITTAL

DESIGNED BY: BDS | CHECKED BY: JL
DRAWN BY: JWH | CHECKED BY: JL

AECOM

90% SUBMISSION - 01/22/16

METROPOLITAN COUNCIL

SOUTHWEST Green Line LRT Extension

CIVIL - VOLUME 4D
EXCELSIOR BLVD
BRIDGE 27C10
PIER TABLE 1 & 4 REINFORCEMENT 1

DISCIPLINE: STRUCTURE
SHEET NAME: CBR27C10-BRG-SUP-026

SHEET 82 OF 174

Jan, 18 2016 01:22 pm V:\3400_ADC\CAD\SEGMENT E1\PLAN SHEETS\STRUCTURES\CBR27C10\CBR27C10-BRG-SUP-026.dwg By: hodgesj

DETAILS REMAIN IN DEVELOPMENT

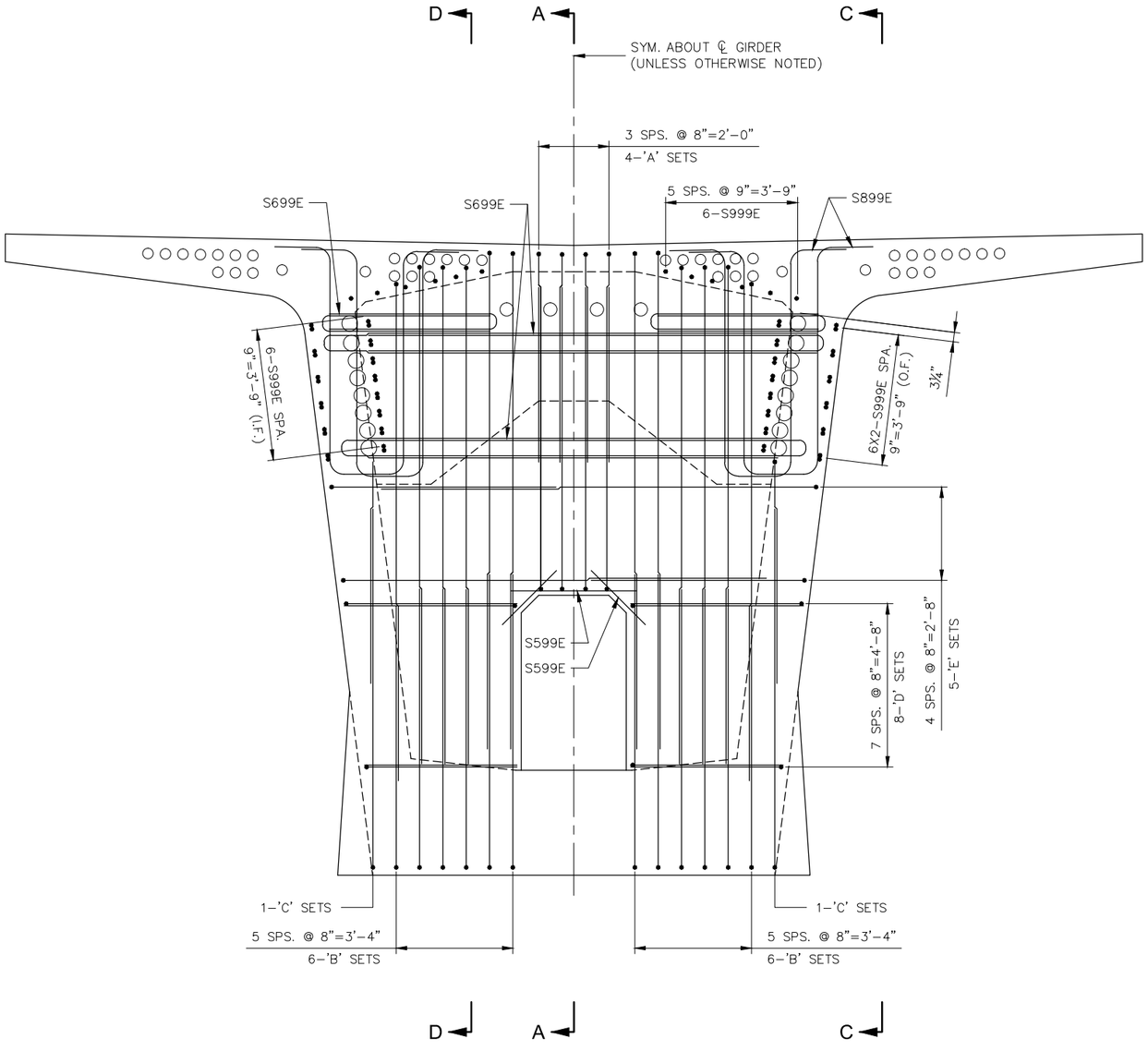

CROSS SECTION AT DIAPHRAGM
(DIAPHRAGM REINFORCEMENT ONLY)

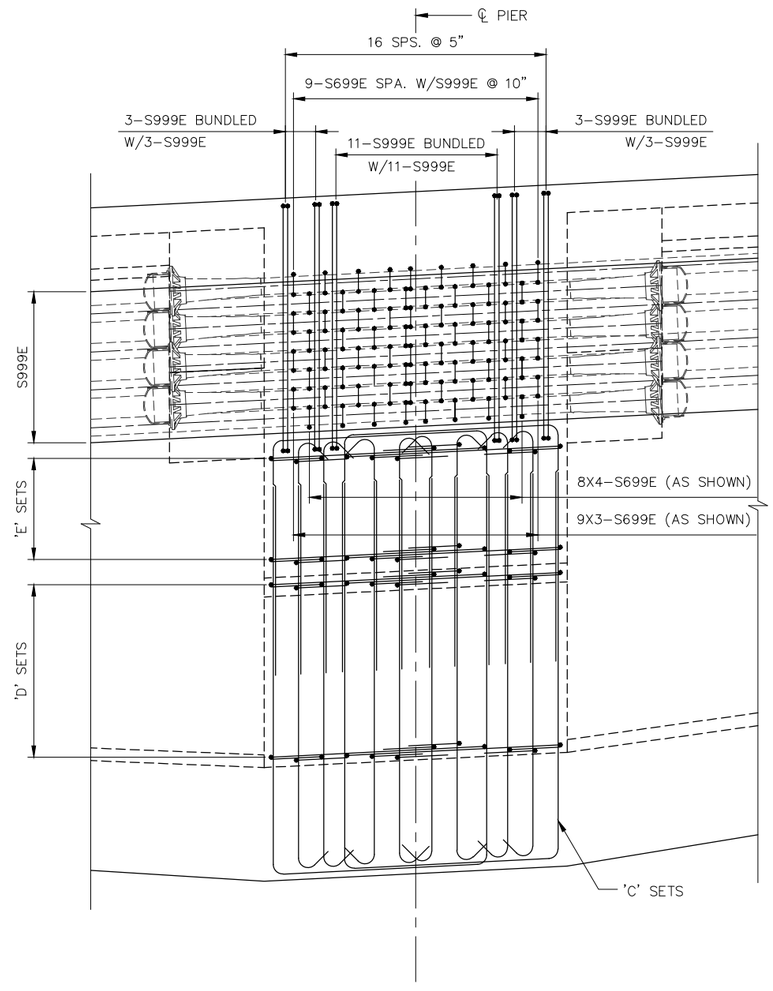

PARTIAL VIEW SECTION C-C
(DIAPHRAGM REINFORCEMENT ONLY)

NO.	DATE	BY	CHECK	DESIGN	REVISION / SUBMITTAL

DESIGNED BY: BDS CHECKED BY: JL
DRAWN BY: JWH CHECKED BY: JL

AECOM

90% SUBMISSION - 01/22/16

METROPOLITAN COUNCIL

SOUTHWEST Green Line LRT Extension

CIVIL - VOLUME 4D
EXCELSIOR BLVD
BRIDGE 27C10
PIER TABLE 1 & 4 REINFORCEMENT 2

DISCIPLINE: STRUCTURE
SHEET NAME: CBR27C10-BRG-SUP-027

SHEET 83 OF 174

Jan, 18 2016 01:22 pm v:\3400_ADC\CAD\SEGMENT E1\PLAN SHEETS\STRUCTURES\CBR27C10\CBR27C10-BRG-SUP-026.dwg By: hodgesj

DETAILS REMAIN IN DEVELOPMENT

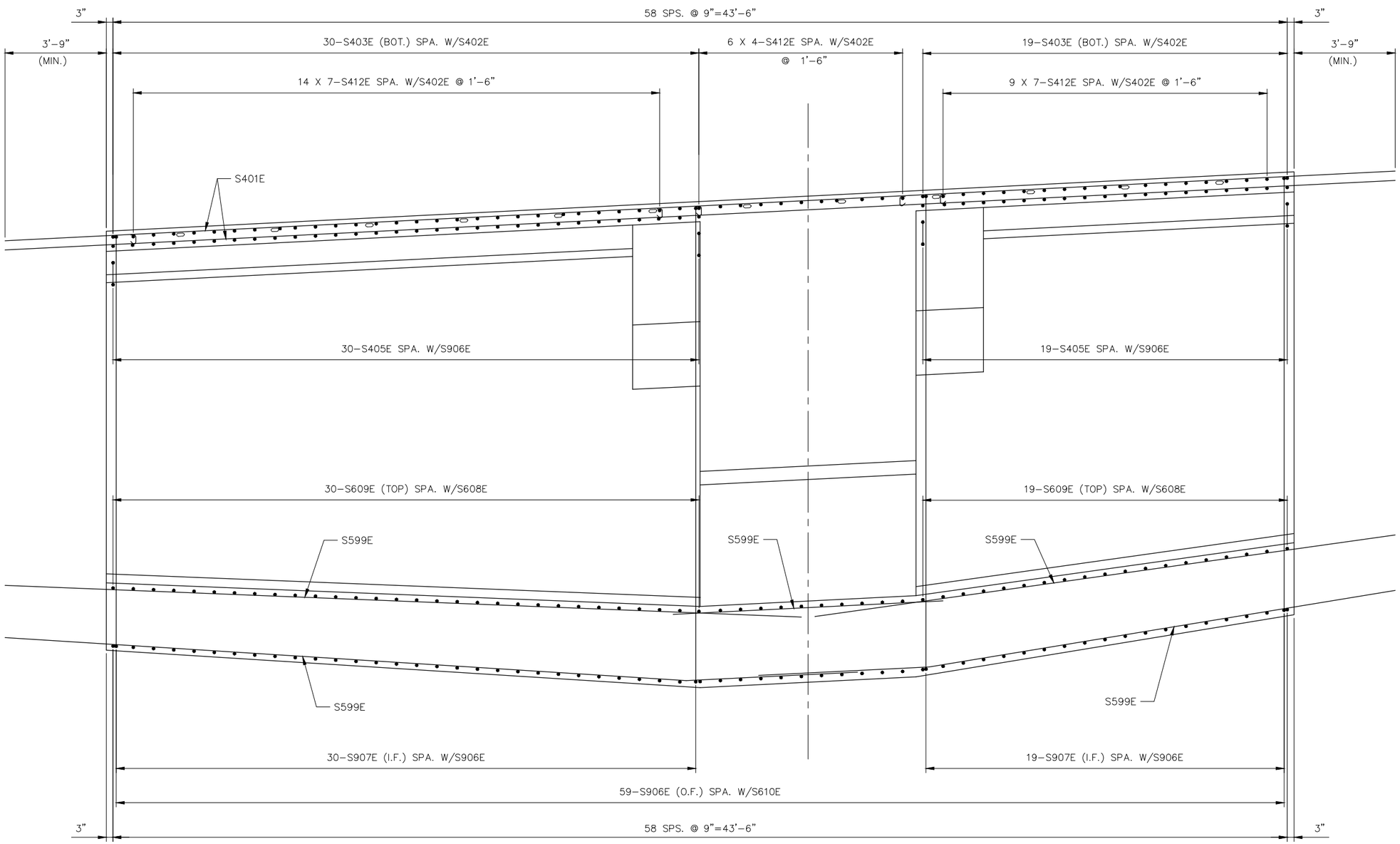

SECTION A-A

(TYPICAL SEGMENT REINFORCEMENT ONLY)

NO.	DATE	BY	CHECK	DESIGN	REVISION / SUBMITTAL

DESIGNED BY: BDS CHECKED BY: JL

DRAWN BY: JWH CHECKED BY: JL

AECOM

90% SUBMISSION - 01/22/16

METROPOLITAN COUNCIL

SOUTHWEST Green Line LRT Extension

CIVIL - VOLUME 4D
EXCELSIOR BLVD
BRIDGE 27C10
PIER TABLES 1 & 4 REINFORCEMENT 3

DISCIPLINE: STRUCTURE

SHEET NAME: CBR27C10-BRG-SUP-028

SHEET 84 OF 174

Jan, 18 2016 01:22 pm V:\3400_ADC\CAD\SEGMENT E1\PLAN SHEETS\STRUCTURES\CBR27C10\CBR27C10-BRG-SUP-026.dwg By: hodgesj

DETAILS REMAIN IN DEVELOPMENT

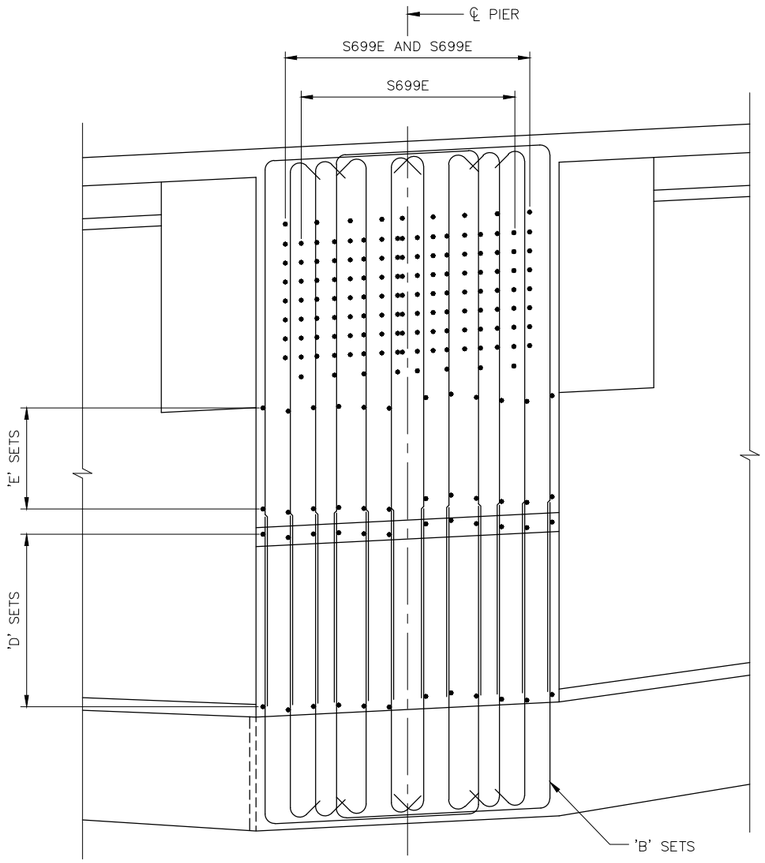

PARTIAL-SECTION D-D
(DIAPHRAGM REINFORCEMENT ONLY)

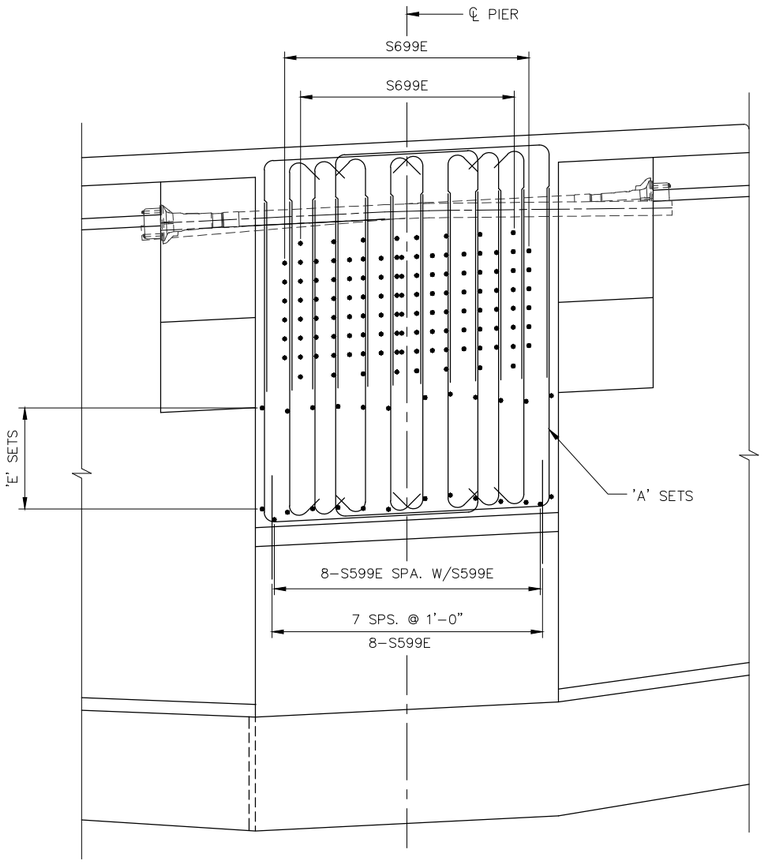

PARTIAL-SECTION A-A
(DIAPHRAGM REINFORCEMENT ONLY)

NO.	DATE	BY	CHECK	DESIGN	REVISION / SUBMITTAL

DESIGNED BY: BDS | CHECKED BY: JL
DRAWN BY: JWH | CHECKED BY: JL

AECOM

90% SUBMISSION - 01/22/16

METROPOLITAN COUNCIL

SOUTHWEST Green Line LRT Extension

CIVIL - VOLUME 4D
EXCELSIOR BLVD
BRIDGE 27C10
PIER TABLES 1 & 4 REINFORCEMENT 4

DISCIPLINE: STRUCTURE
SHEET NAME: CBR27C10-BRG-SUP-029

SHEET 85 OF 174

Jan, 18 2016 01:23 pm V:\3400_ADC\CAD\SEGMENT E1\PLAN SHEETS\STRUCTURES\CBR27C10\CBR27C10-BRG-SUP-026.dwg By: hodgesj

DETAILS REMAIN IN DEVELOPMENT

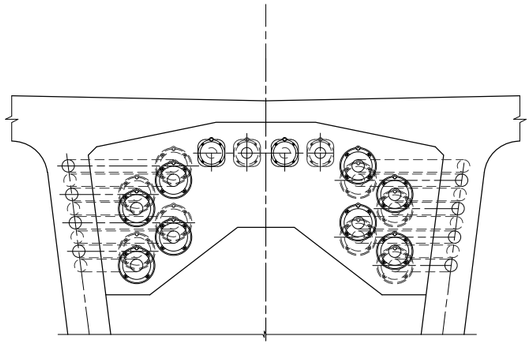

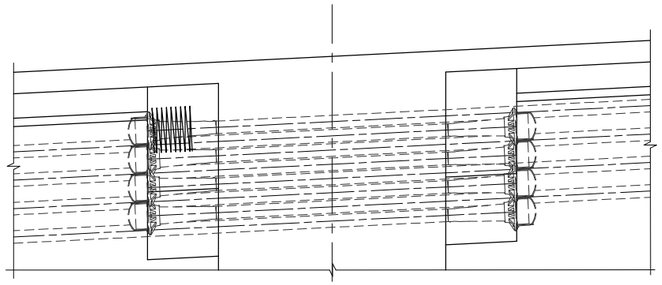

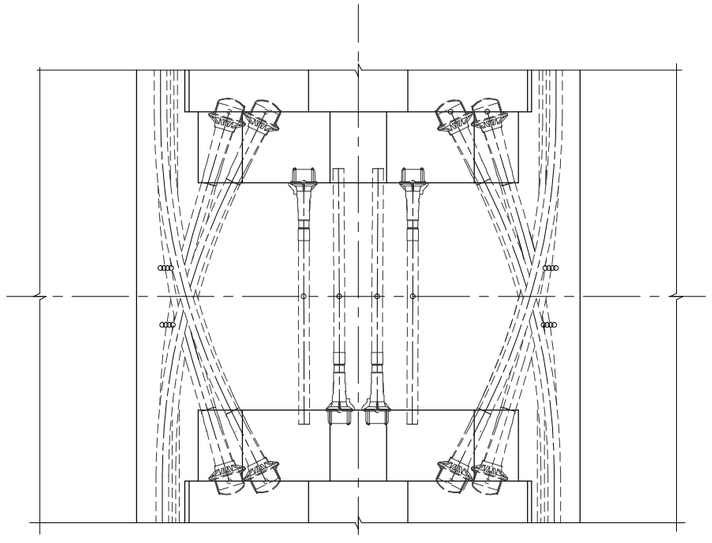

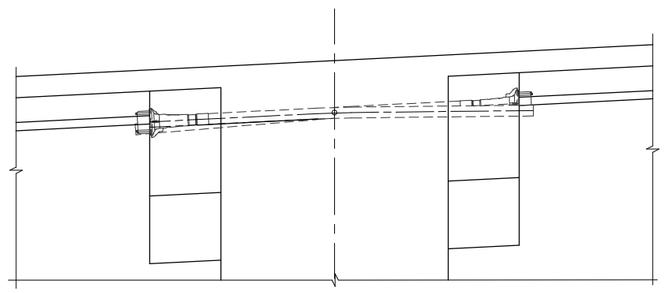

Jan, 18 2016 01:23 pm v:\3400_ADC\CAD\SEGMENT E1\PLAN SHEETS\STRUCTURES\CBR27C10\CBR27C10-BRG-SUP-026.dwg By: hodgesj

NO.	DATE	BY	CHECK	DESIGN	REVISION / SUBMITTAL

DESIGNED BY: BDS | CHECKED BY: JL
DRAWN BY: JWH | CHECKED BY: JL

AECOM

90% SUBMISSION - 01/22/16

METROPOLITAN COUNCIL

SOUTHWEST Green Line LRT Extension

CIVIL - VOLUME 4D
EXCELSIOR BLVD
BRIDGE 27C10
PIER TABLES 1 & 4 REINFORCEMENT 5

DISCIPLINE: STRUCTURE

SHEET NAME: CBR27C10-BRG-SUP-030

SHEET 86 OF 174

DETAILS REMAIN IN DEVELOPMENT

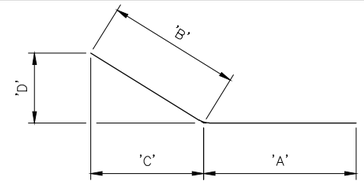

BAR	'A'	'B'	'C'	'D'
S402E	16'–1"	16'–1"	16'–0⅞"	7¾"
S404E	9'–9"	6'–0"	5'–8⅛"	1'–11⅜"
S609E	6'–0"	1'–0"	2¾"	11⅝"
S420E	4'–10"	8'–9"	8'–8¾"	7"
S427E	8'–6"	1'–9"	11⅝"	1'–5½"

S402E, S404E, S609E, S420E, S427E

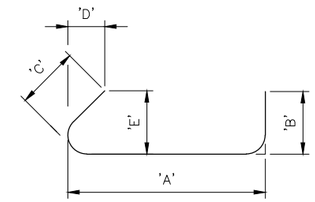

BAR	'A'	'B'	'C'	'D'	'E'
S414E	1'–11"	8"	8"	¾"	8⅛"
S415E	1'–8"	8"	8"	¾"	8⅛"

S414E, S415E

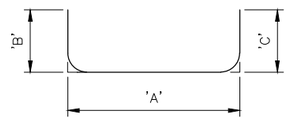

BAR	'A'	'B'	'C'
S919E	4'–6"	1'–7"	1'–7"
S421E	7½"	8"	8"
S426E	5"	2'–0"	2'–0"
S831E	VARIES FROM 5'–3½" TO 5'–9½"	1'–4"	1'–4"
S832E	VARIES FROM 13'–0" TO 13'–2"	1'–4"	1'–4"
S936E	7'–5"	1'–7"	1'–7"
S443E	7"	1'–6"	1'–6"

S919E, S421E, S426E, S831E, S832E, S936E, S443E

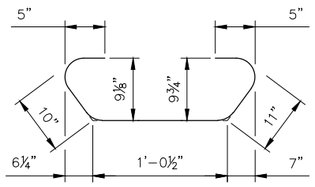

S405E

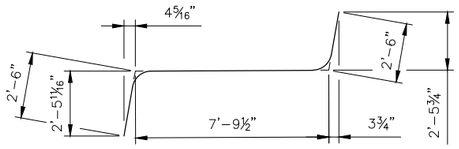

S907E

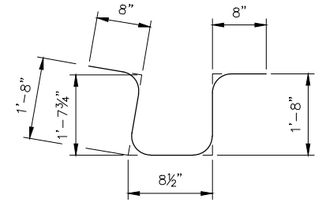

S416E

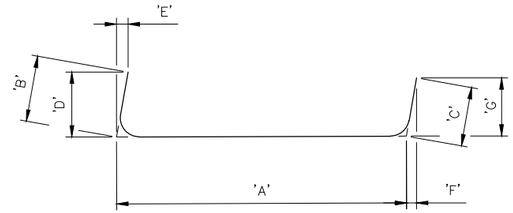

BAR	'A'	'B'	'C'	'D'	'E'	'F'	'G'
S906E	7'–10"	2'–6"	2'–6"	2'–5⁵⁄₁₆"	4⁵⁄₁₆"	3¾"	2'–5¾"
S828E	7'–2"	4'–0"	4'–0"	3'–11⁵⁄₁₆"	2⅜"	2⅜"	3'–11⁵⁄₁₆"
S540E	2'–4½"	3'–4"	3'–4"	3'–3⁵⁄₁₆"	2"	2"	3'–3⁵⁄₁₆"

S906E, S828E, S540E

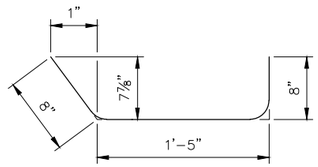

S413E

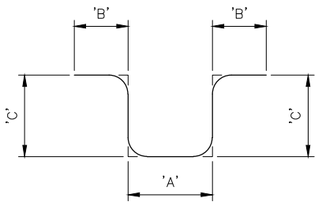

BAR	'A'	'B'	'C'
S538E	9"	10"	VARIES FROM 1'–1" TO 1'–5"
S539E	9"	10"	VARIES FROM 1'–2" TO 1'–9"

S538E, S539E

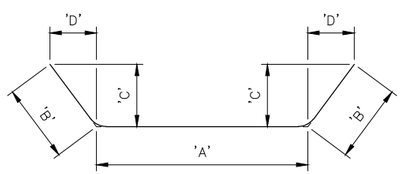

BAR	'A'	'B'	'C'	'D'
S918E	13'–6"	1'–7"	1'–6⅞"	2⅜"
S424E	1'–4½"	8"	5¼"	6"
S944E	13'–8½"	1'–7"	1'–6⅞"	2⅜"

S918E, S424E, S944E

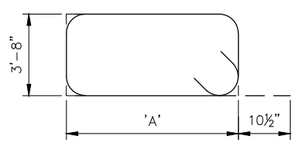

BAR	'A'
S829E	VARIES FROM 5'–3½" TO 5'–9½"
S830E	VARIES FROM 13'–0" TO 13'–2"
S833E	3'–2"
S834E	2'–1"
S835E	10'–6"

S829E, S830E, S833E, S834E, S835E

BILL OF REINFORCEMENT END DIAPHRAGM (ONE SEGMENT ONLY)

BAR	NO.	LENGTH	SHAPE	LOCATION
S401E	51	14'–8"	STR.	LONGITUDINAL TOP SLAB
S402E	15	32'–2"		TOP SLAB
S403E	7	5'–0"	STR.	TOP SLAB
S404E	14	15'–9"		TOP SLAB
S405E	14	3'–9"		TOP SLAB
S906E	30	12'–10"		WEB
S907E	14	12'–10"		WEB
S609E	14	7'–0"		BOTTOM SLAB
S413E	16	2'–9"		WALKWAY
S414E	8	3'–2"		WALKWAY
S415E	8	2'–11"		WALKWAY
S416E	8	5'–5"		WALKWAY
S517E	25	14'–8"	STR.	LONGITUDINAL
S918E	9	16'–8"		BOTTOM SLAB
S919E	5	7'–8"		BOTTOM SLAB
S420E	11	14'–9"–		BOTTOM SLAB

* DENOTES AVERAGE LENGTH.

LEGEND

S 4 07 E

- S: SUPERSTRUCTURE
- 4: BAR SIZE
- 07: BAR DESIGNATION
- E: E = EPOXY, S = STAINLESS STEEL, BLANK FOR BLACK BAR

NO.	DATE	BY	CHECK	DESIGN	REVISION / SUBMITTAL

DESIGNED BY: BDS | CHECKED BY: JL
DRAWN BY: JWH | CHECKED BY: JL

AECOM

90% SUBMISSION - 01/22/16

METROPOLITAN COUNCIL

SOUTHWEST Green Line LRT Extension

CIVIL - VOLUME 4D
EXCELSIOR BLVD
BRIDGE 27C10
PIER TABLES 1 & 4 REINFORCEMENT 6

DISCIPLINE: STRUCTURE

SHEET NAME: CBR27C10-BRG-SUP-031

SHEET 87 OF 174

Jan, 18 2016 01:23 pm v:\3400_ADC\CAD\SEGMENT E1\PLAN SHEETS\STRUCTURES\CBR27C10\CBR27C10-BRG-SUP-026.dwg By: hodgesj

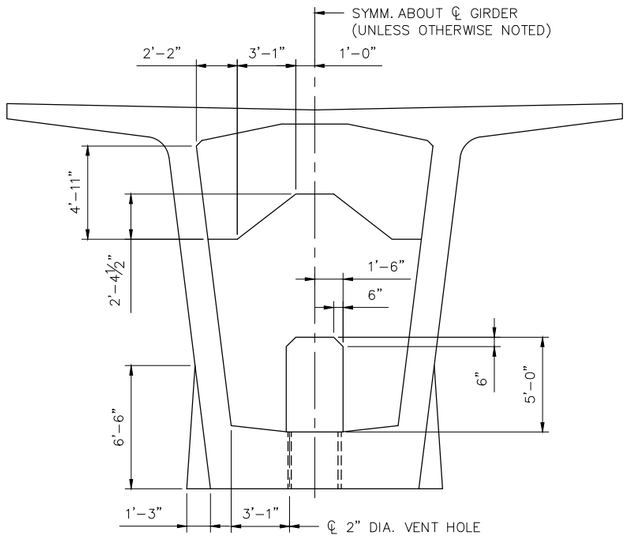

SECTION A-A

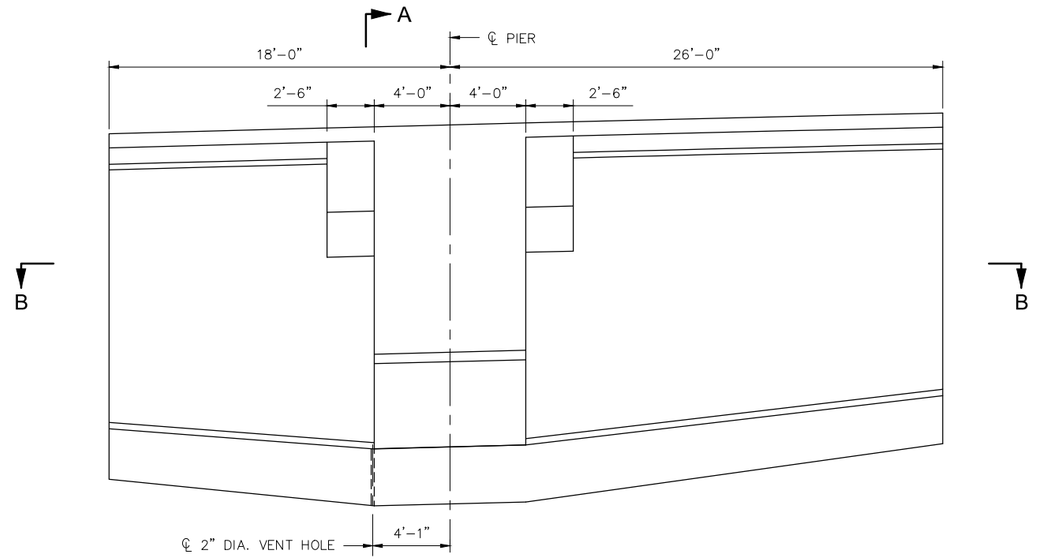

SECTION C-C

NOTES:

FOR TYPICAL DIMENSIONS NOT SHOWN SEE "CANTILEVER SEGMENT DETAILS" SHEET.

PIER TABLE 2 SHOWN, PIER TABLE 3 SIMILAR.

(1) 8"ø HOLE FOR DRAIN PIPE IS TO BE LOCATED ON THE LEFT SIDE OF THE GIRDER LOOKING UPSTATION & UPSTATION OF THE ℄ PIER FOR PIER TABLE 2 AND DOWNSTATION OF THE ℄ PIER FOR PIER TABLE 3.

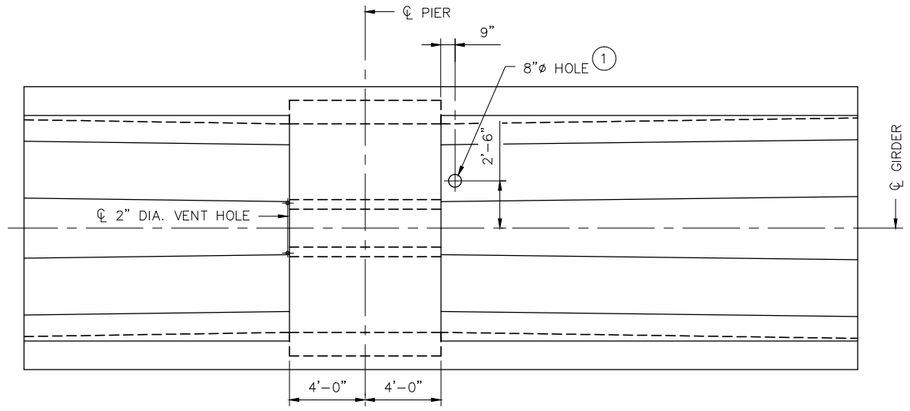

SECTION B-B

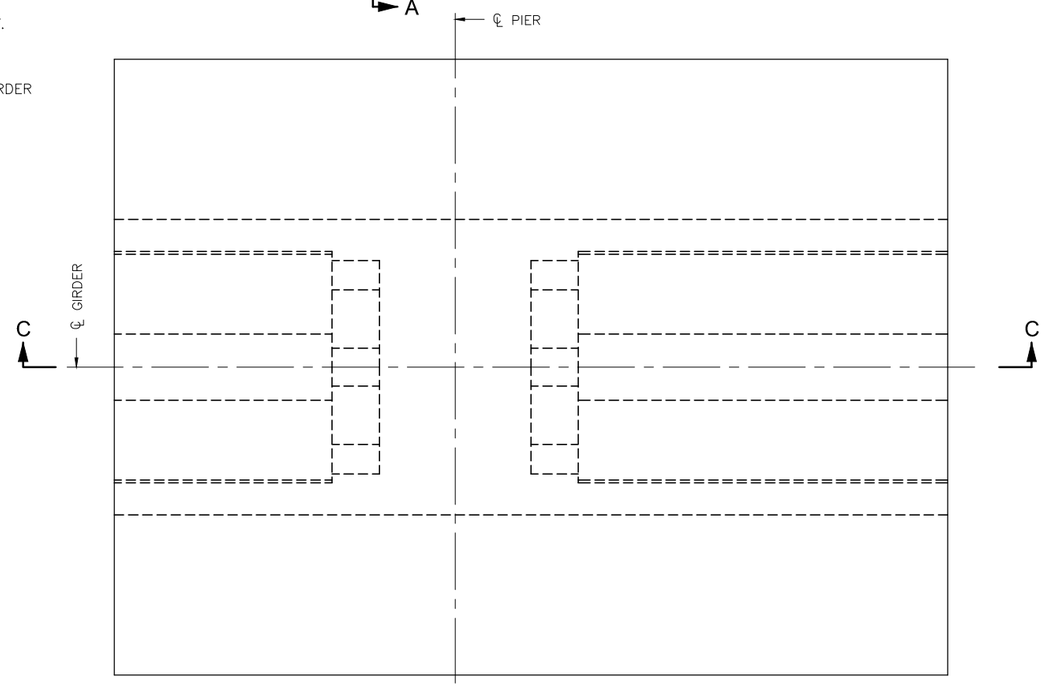

PLAN

NO.	DATE	BY	CHECK	DESIGN	REVISION / SUBMITTAL

DESIGNED BY: ETN | CHECKED BY: JWJ
DRAWN BY: JWH | CHECKED BY: JL

AECOM

90% SUBMISSION - 01/22/16

METROPOLITAN COUNCIL

SOUTHWEST Green Line LRT Extension

CIVIL - VOLUME 4D
EXCELSIOR BLVD
BRIDGE 27C10
PIER TABLES 2 & 3 DETAILS

DISCIPLINE: STRUCTURE

SHEET NAME: CBR27C10-BRG-SUP-032

SHEET 88 OF 174

Jan, 18 2016 01:25 pm C:\Users\Hodgesj\appdata\local\temp\AcPublish_3644\CBR27C10-BRG-SUP-032.dwg By: hodgesj

DETAILS REMAIN IN DEVELOPMENT

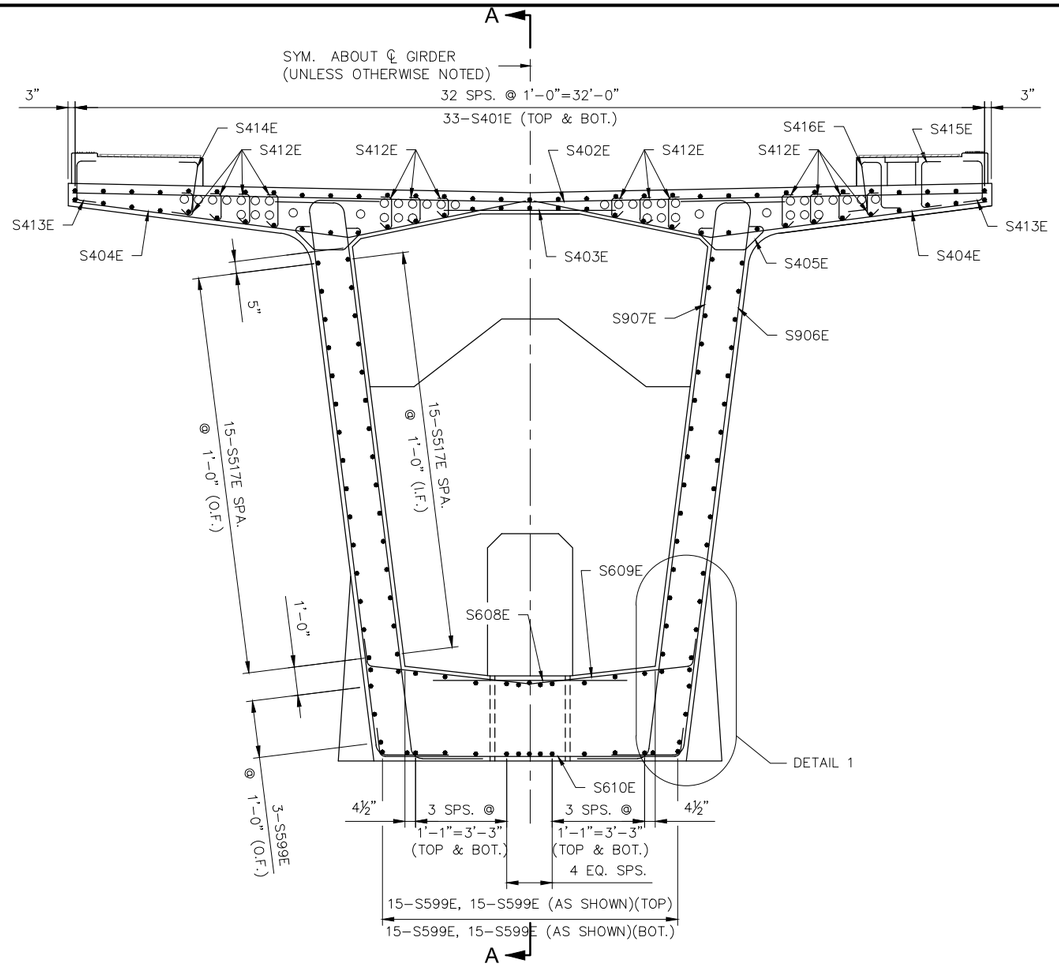

CROSS SECTION
(TYPICAL SEGMENT REINFORCEMENT ONLY)

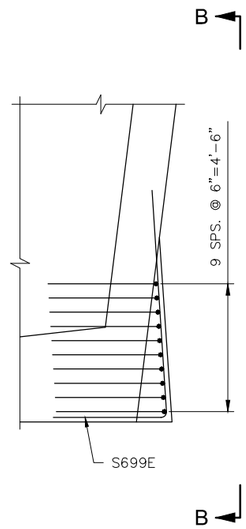

DETAIL 1

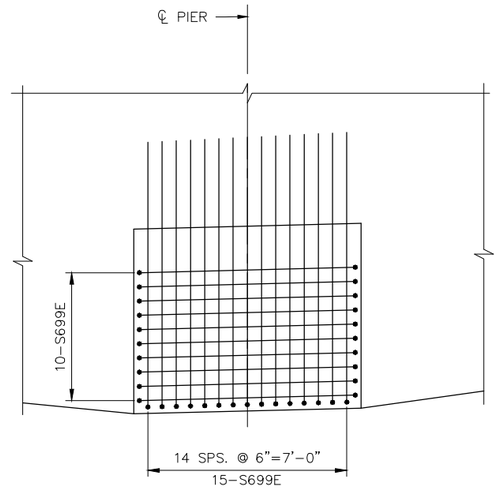

VIEW B-B

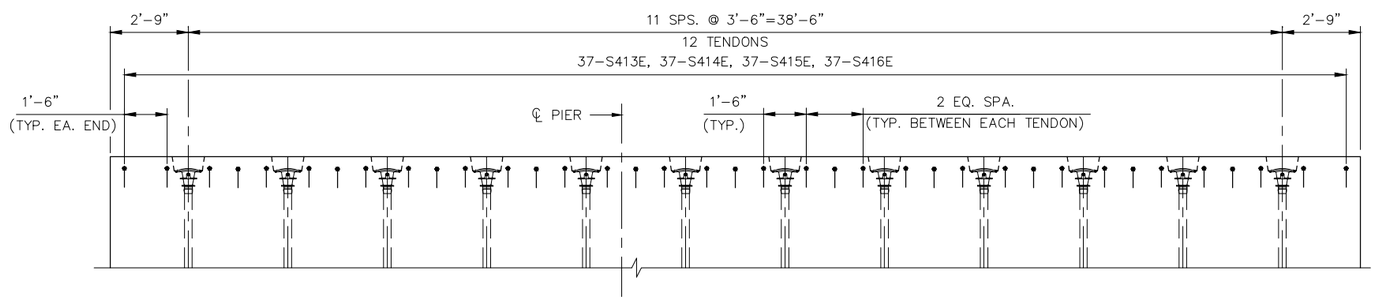

PARTIAL PLAN

NO.	DATE	BY	CHECK	DESIGN	REVISION / SUBMITTAL

DESIGNED BY: BDS | CHECKED BY: JL
DRAWN BY: JWH | CHECKED BY: JL

AECOM

90% SUBMISSION - 01/22/16

METROPOLITAN COUNCIL

SOUTHWEST Green Line LRT Extension

CIVIL - VOLUME 4D
EXCELSIOR BLVD
BRIDGE 27C10
PIER TABLES 2 & 3 REINFORCEMENT 1

DISCIPLINE: STRUCTURE
SHEET NAME: CBR27C10-BRG-SUP-033

SHEET 89 OF 174

Jan, 18 2016 01:27 pm V:\3400_ADC\CAD\SEGMENT E1\PLAN SHEETS\STRUCTURES\CBR27C10\CBR27C10-BRG-SUP-033.dwg By: hodgesj

DETAILS REMAIN IN DEVELOPMENT

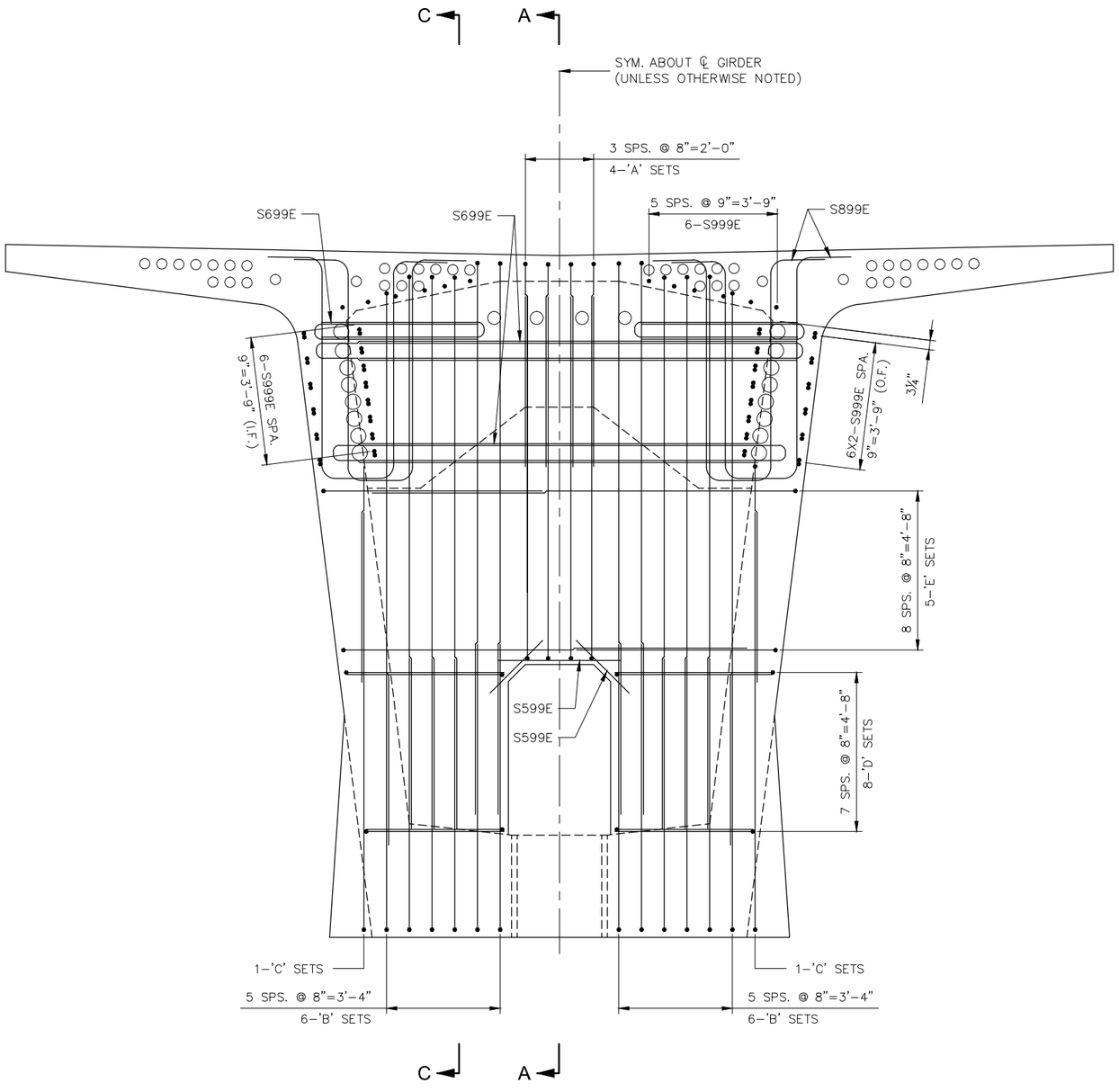

CROSS SECTION
(DIAPHRAGM REINFORCEMENT ONLY)

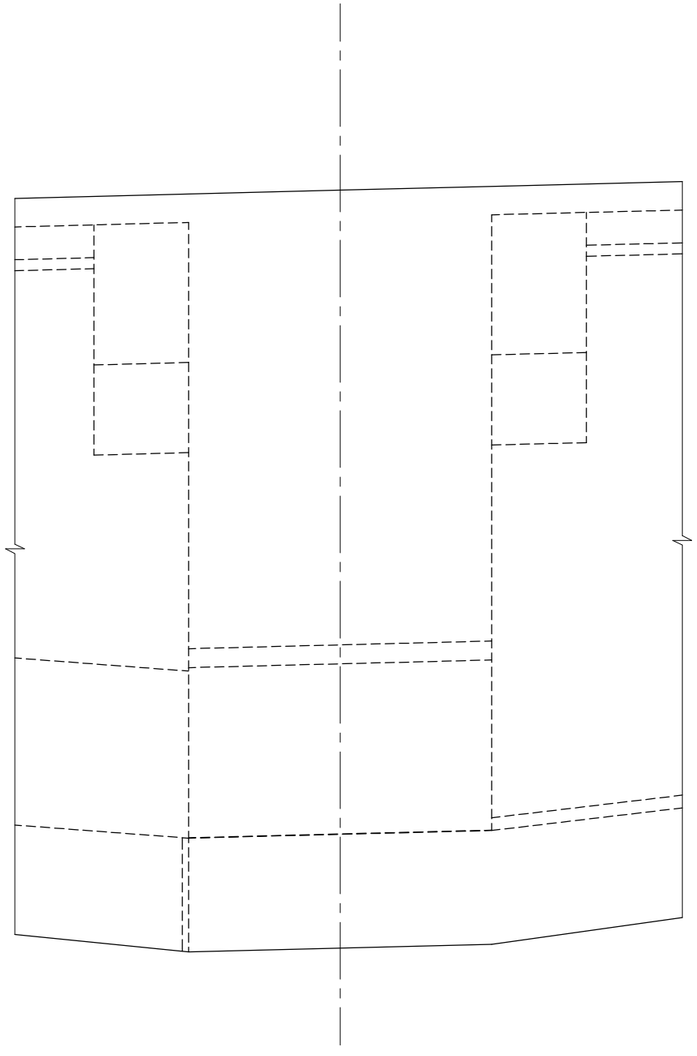

Jan, 18 2016 01:27 pm V:\3400_ADC\CAD\SEGMENT E1\PLAN SHEETS\STRUCTURES\CBR27C10\CBR27C10-BRG-SUP-033.dwg By: hodgesj

NO.	DATE	BY	CHECK	DESIGN	REVISION / SUBMITTAL

DESIGNED BY: BDS | CHECKED BY: JL
DRAWN BY: JWH | CHECKED BY: JL

AECOM

90% SUBMISSION - 01/22/16

METROPOLITAN COUNCIL

SOUTHWEST Green Line LRT Extension

CIVIL - VOLUME 4D
EXCELSIOR BLVD
BRIDGE 27C10
PIER TABLES 2 & 3 REINFORCEMENT 2

DISCIPLINE: STRUCTURE
SHEET NAME: CBR27C10-BRG-SUP-034

SHEET 90 OF 174

DETAILS REMAIN IN DEVELOPMENT

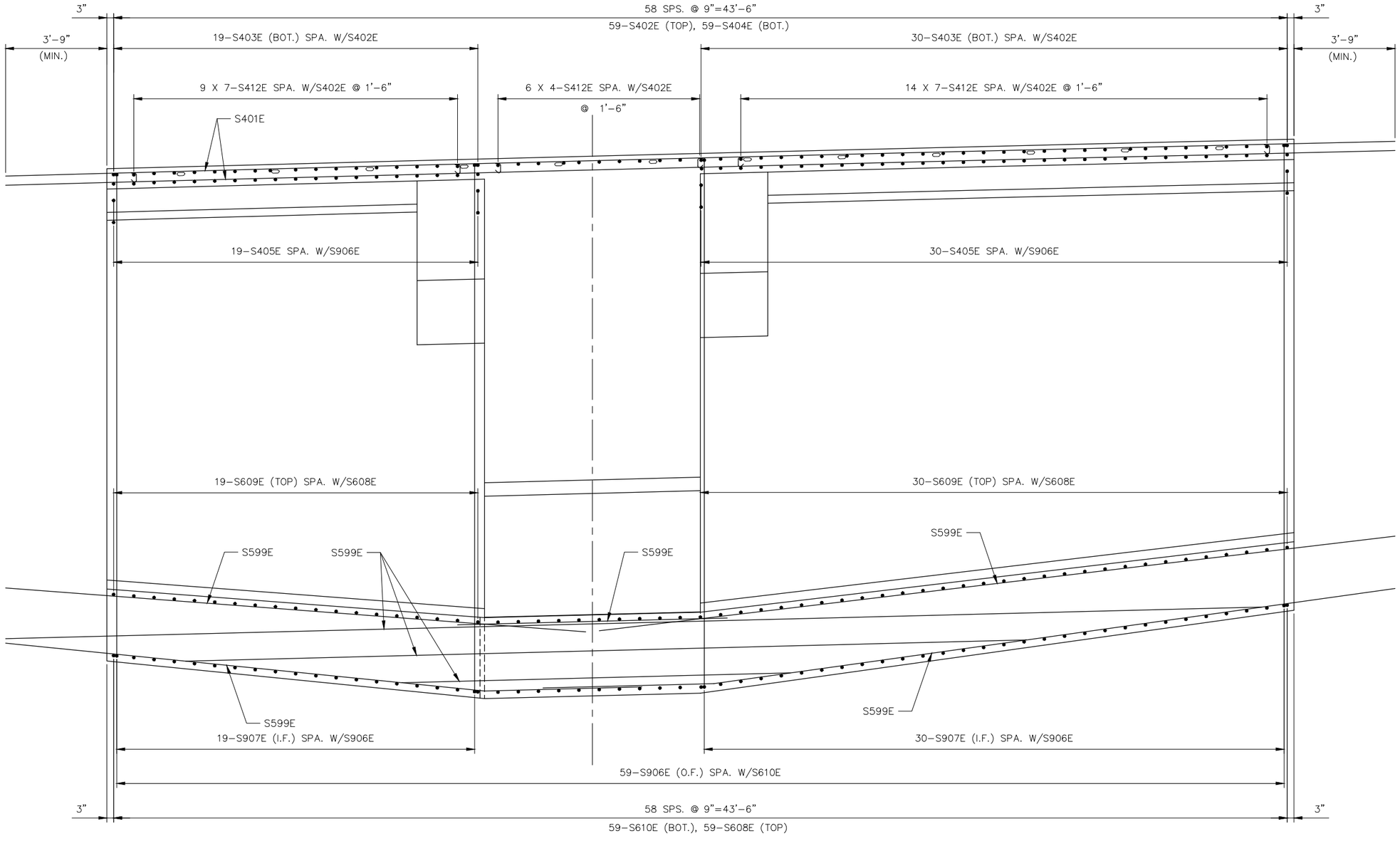

SECTION A-A

(TYPICAL SEGMENT REINFORCEMENT ONLY)

NO.	DATE	BY	CHECK	DESIGN	REVISION / SUBMITTAL

DESIGNED BY: BDS CHECKED BY: JL

DRAWN BY: JWH CHECKED BY: JL

AECOM

METROPOLITAN COUNCIL

SOUTHWEST Green Line LRT Extension

90% SUBMISSION - 01/22/16

CIVIL - VOLUME 4D
EXCELSIOR BLVD
BRIDGE 27C10
PIER TABLES 2 & 3 REINFORCEMENT 3

DISCIPLINE: STRUCTURE

SHEET NAME: CBR27C10-BRG-SUP-035

SHEET 91 OF 174

Jan, 18 2016 01:27 pm V:\3400_ADC\CAD\SEGMENT E1\PLAN SHEETS\STRUCTURES\CBR27C10\CBR27C10-BRG-SUP-033.dwg By: hodgesj

DETAILS REMAIN IN DEVELOPMENT

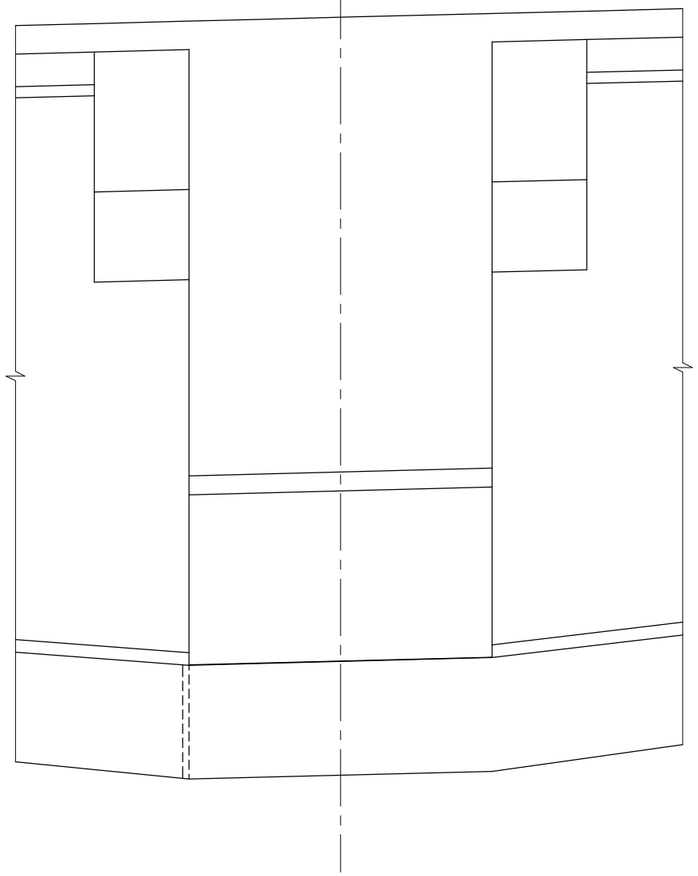

PARTIAL-SECTION A-A
(TYPICAL SEGMENT REINFORCEMENT ONLY)

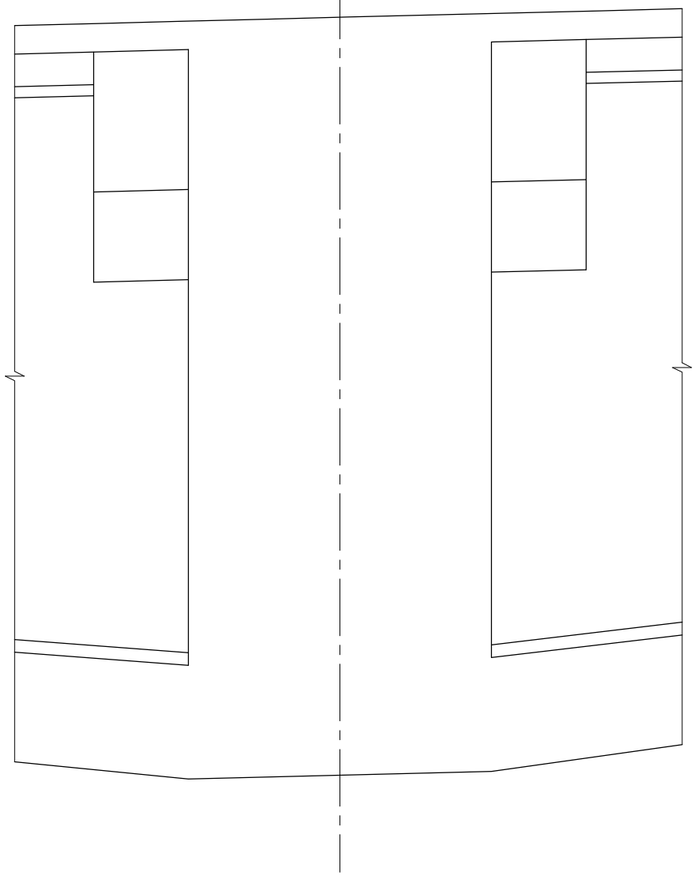

SECTION C-C

NO.	DATE	BY	CHECK	DESIGN	REVISION / SUBMITTAL

DESIGNED BY: BDS | CHECKED BY: JL
DRAWN BY: JWH | CHECKED BY: JL

AECOM

90% SUBMISSION - 01/22/16

METROPOLITAN COUNCIL

SOUTHWEST Green Line LRT Extension

CIVIL - VOLUME 4D
EXCELSIOR BLVD
BRIDGE 27C10
PIER TABLES 2 & 3 REINFORCEMENT 4

DISCIPLINE: STRUCTURE
SHEET NAME: CBR27C10-BRG-SUP-036

SHEET 92 OF 174

Jan, 18 2016 01:27 pm V:\3400_ADC\CAD\SEGMENT E1\PLAN SHEETS\STRUCTURES\CBR27C10\CBR27C10-BRG-SUP-033.dwg By: hodgesj

DETAILS REMAIN IN DEVELOPMENT

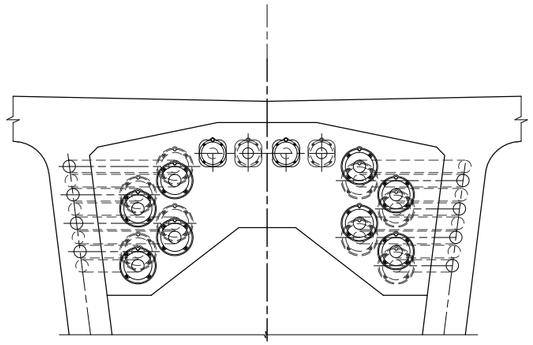

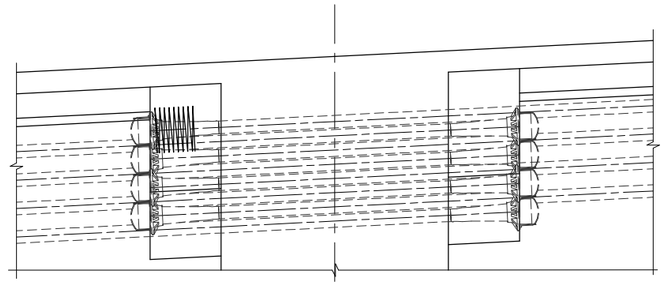

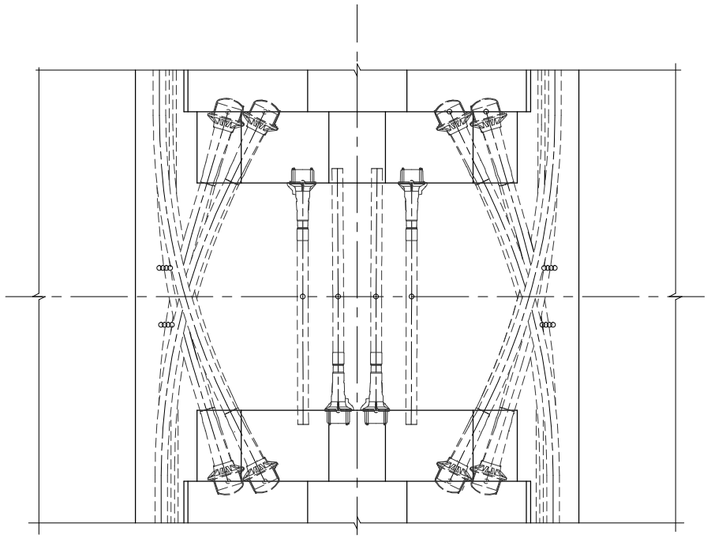

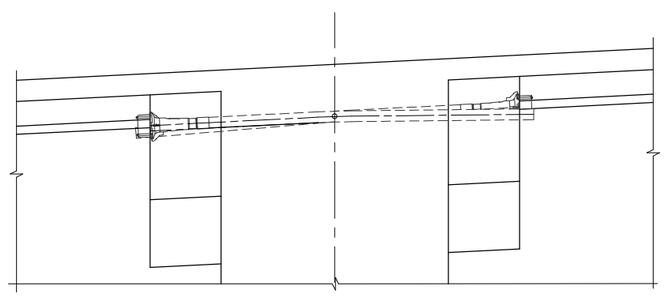

Jan, 18 2016 01:28 pm V:\3400_ADC\CAD\SEGMENT E1\PLAN SHEETS\STRUCTURES\CBR27C10\CBR27C10-BRG-SUP-033.dwg By: hodgesj

NO.	DATE	BY	CHECK	DESIGN	REVISION / SUBMITTAL

DESIGNED BY: BDS CHECKED BY: JL
DRAWN BY: JWH CHECKED BY: JL

AECOM

90% SUBMISSION - 01/22/16

METROPOLITAN COUNCIL

SOUTHWEST Green Line LRT Extension

CIVIL - VOLUME 4D
EXCELSIOR BLVD
BRIDGE 27C10
PIER TABLES 2 & 3 REINFORCEMENT 5

DISCIPLINE: STRUCTURE

SHEET NAME: CBR27C10-BRG-SUP-037

SHEET 93 OF 174

DETAILS REMAIN IN DEVELOPMENT

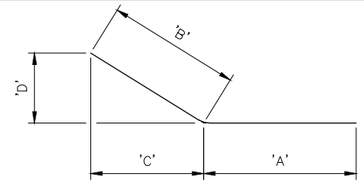

BAR	'A'	'B'	'C'	'D'
S402E	16'–1"	16'–1"	16'–0⅞"	7¾"
S404E	9'–9"	6'–0"	5'–8⅛"	1'–11⅜"
S609E	6'–0"	1'–0"	2¾"	11⅝"
S420E	4'–10"	8'–9"	8'–8¾"	7"
S427E	8'–6"	1'–9"	11⅝"	1'–5½"

S402E, S404E, S609E, S420E, S427E

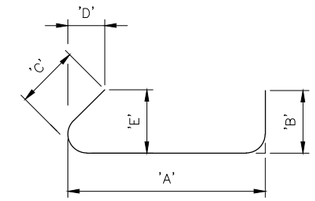

BAR	'A'	'B'	'C'	'D'	'E'
S414E	1'–11"	8"	8"	¾"	8⅛"
S415E	1'–8"	8"	8"	¾"	8⅛"

S414E, S415E

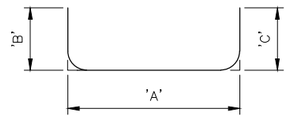

BAR	'A'	'B'	'C'
S919E	4'–6"	1'–7"	1'–7"
S421E	7½"	8"	8"
S426E	5"	2'–0"	2'–0"
S831E	VARIES FROM 5'–3½" TO 5'–9½"	1'–4"	1'–4"
S832E	VARIES FROM 13'–0" TO 13'–2"	1'–4"	1'–4"
S936E	7'–5"	1'–7"	1'–7"
S443E	7"	1'–6"	1'–6"

S919E, S421E, S426E, S831E, S832E, S936E, S443E

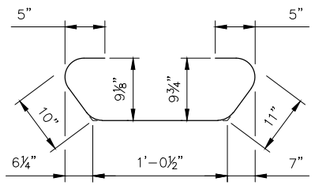

S405E

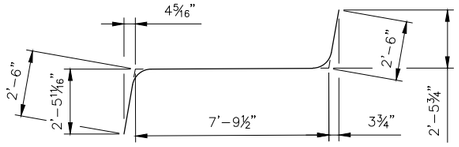

S907E

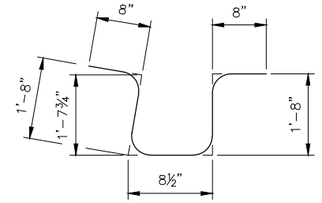

S416E

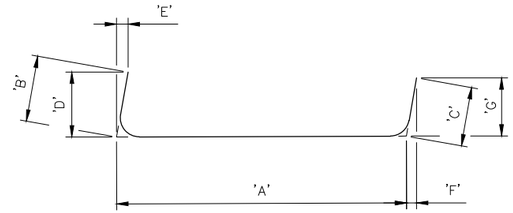

BAR	'A'	'B'	'C'	'D'	'E'	'F'	'G'
S906E	7'–10"	2'–6"	2'–6"	2'–5⁵⁄₁₆"	4⁵⁄₁₆"	3¾"	2'–5¾"
S828E	7'–2"	4'–0"	4'–0"	3'–11⁵⁄₁₆"	2⅜"	2⅜"	3'–11⁵⁄₁₆"
S540E	2'–4½"	3'–4"	3'–4"	3'–3¹⁵⁄₁₆"	2"	2"	3'–3¹⁵⁄₁₆"

S906E, S828E, S540E

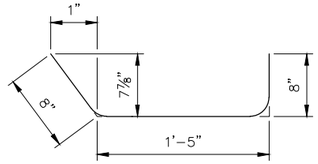

S413E

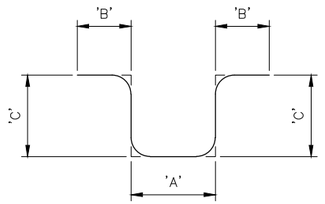

BAR	'A'	'B'	'C'
S538E	9"	10"	VARIES FROM 1'–1" TO 1'–5"
S539E	9"	10"	VARIES FROM 1'–2" TO 1'–9"

S538E, S539E

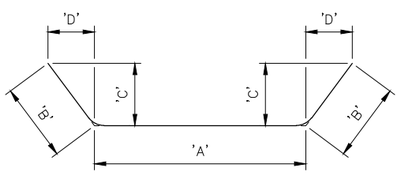

BAR	'A'	'B'	'C'	'D'
S918E	13'–6"	1'–7"	1'–6⅞"	2⅜"
S424E	1'–4½"	8"	5¼"	6"
S944E	13'–8½"	1'–7"	1'–6⅞"	2⅜"

S918E, S424E, S944E

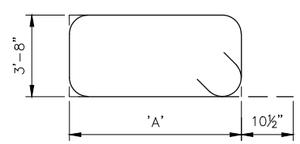

BAR	'A'
S829E	VARIES FROM 5'–3½" TO 5'–9½"
S830E	VARIES FROM 13'–0" TO 13'–2"
S833E	3'–2"
S834E	2'–1"
S835E	10'–6"

S829E, S830E, S833E, S834E, S835E

BILL OF REINFORCEMENT END DIAPHRAGM (ONE SEGMENT ONLY)

BAR	NO.	LENGTH	SHAPE	LOCATION
S401E	51	14'–8"	STR.	LONGITUDINAL TOP SLAB
S402E	15	32'–2"		TOP SLAB
S403E	7	5'–0"	STR.	TOP SLAB
S404E	14	15'–9"		TOP SLAB
S405E	14	3'–9"		TOP SLAB
S906E	30	12'–10"		WEB
S907E	14	12'–10"		WEB
S609E	14	7'–0"		BOTTOM SLAB
S413E	16	2'–9"		WALKWAY
S414E	8	3'–2"		WALKWAY
S415E	8	2'–11"		WALKWAY
S416E	8	5'–5"		WALKWAY
S517E	25	14'–8"	STR.	LONGITUDINAL
S918E	9	16'–8"		BOTTOM SLAB
S919E	5	7'–8"		BOTTOM SLAB
S420E	11	14'–9"–		BOTTOM SLAB

* DENOTES AVERAGE LENGTH.

LEGEND

S 4 07 E

- S: SUPERSTRUCTURE
- 4: BAR SIZE
- 07: BAR DESIGNATION
- E = EPOXY
- S = STAINLESS STEEL
- BLANK FOR BLACK BAR

NO.	DATE	BY	CHECK	DESIGN	REVISION / SUBMITTAL

DESIGNED BY: BDS | CHECKED BY: JL
DRAWN BY: JWH | CHECKED BY: JL

AECOM

90% SUBMISSION - 01/22/16

METROPOLITAN COUNCIL

SOUTHWEST Green Line LRT Extension

CIVIL - VOLUME 4D
EXCELSIOR BLVD
BRIDGE 27C10
PIER TABLES 2 & 3 REINFORCEMENT 6

DISCIPLINE: STRUCTURE

SHEET NAME: CBR27C10-BRG-SUP-038

SHEET 94 OF 174

Jan, 18 2016 01:28 pm v:\3400_ADC\CAD\SEGMENT E1\PLAN SHEETS\STRUCTURES\CBR27C10\CBR27C10-BRG-SUP-033.dwg By: hodgesj

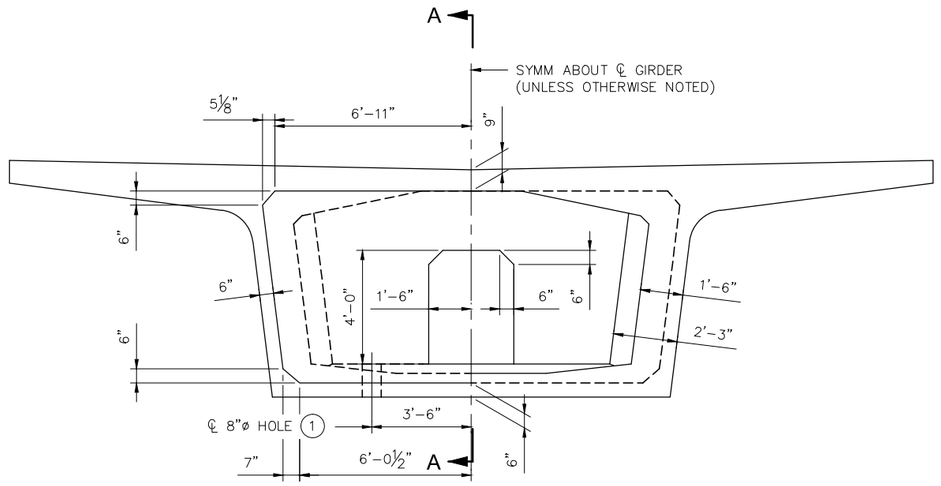

CROSS SECTION
EXPANSION JOINT FACE

CROSS SECTION
TYPICAL FACE

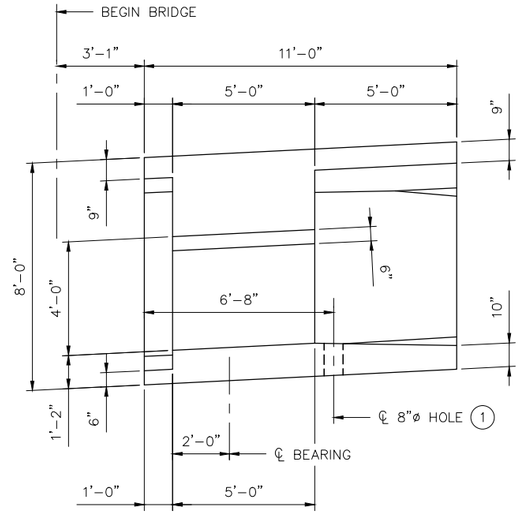

SECTION A-A

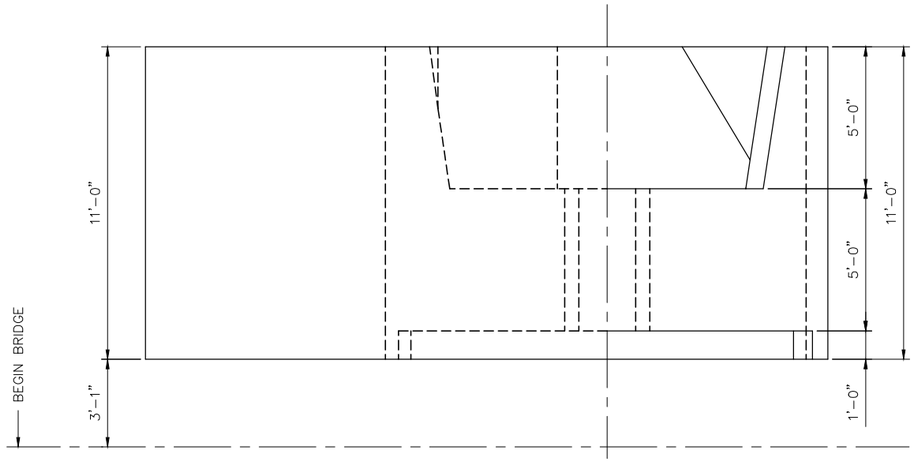

HALF PLAN TOP SLAB

HALF PLAN BOTTOM SLAB

NOTES:

FOR TYPICAL DIMENSIONS NOT SHOWN SEE "CANTILEVER SEGMENT DETAILS" SHEET.

END DIAPHRAGM AT WEST ABUTMENT SHOWN. DIAPHRAGM AT EAST ABUTMENT SIMILAR.

(1) 8"ø HOLE FOR DRAIN PIPE IS TO BE LOCATED ON THE LEFT SIDE OF THE GIRDER LOOKING UPSTATION FOR BOTH THE END DIAPHRAGM AT THE WEST ABUTMENT AND EAST ABUTMENT.

NO.	DATE	BY	CHECK	DESIGN	REVISION / SUBMITTAL

DESIGNED BY: ETN CHECKED BY: JWJ
DRAWN BY: JWH CHECKED BY: JL

AECOM

90% SUBMISSION - 01/22/16

METROPOLITAN COUNCIL

SOUTHWEST Green Line LRT Extension

CIVIL - VOLUME 4D
EXCELSIOR BLVD
BRIDGE 27C10
END DIAPHRAGM DETAILS

DISCIPLINE: STRUCTURE

SHEET NAME: CBR27C10-BRG-SUP-039

SHEET 95 OF 174

Jan, 18 2016 12:42 pm C:\Users\Hodgesj\appdata\local\temp\AcPublish_8104\CBR27C10-BRG-SUP-039.dwg By: hodgesj

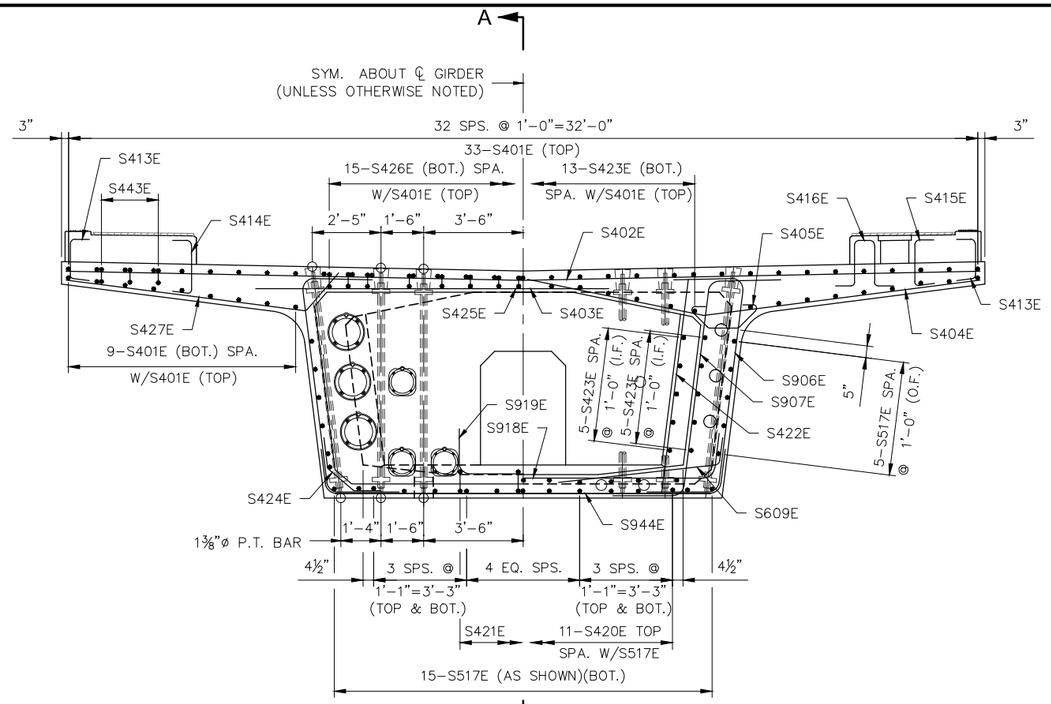

HALF SECTION-FRONT FACE
(TYPICAL SEGMENT REINFORCEMENT ONLY)

HALF SECTION-BACK FACE
(TYPICAL SEGMENT REINFORCEMENT ONLY)

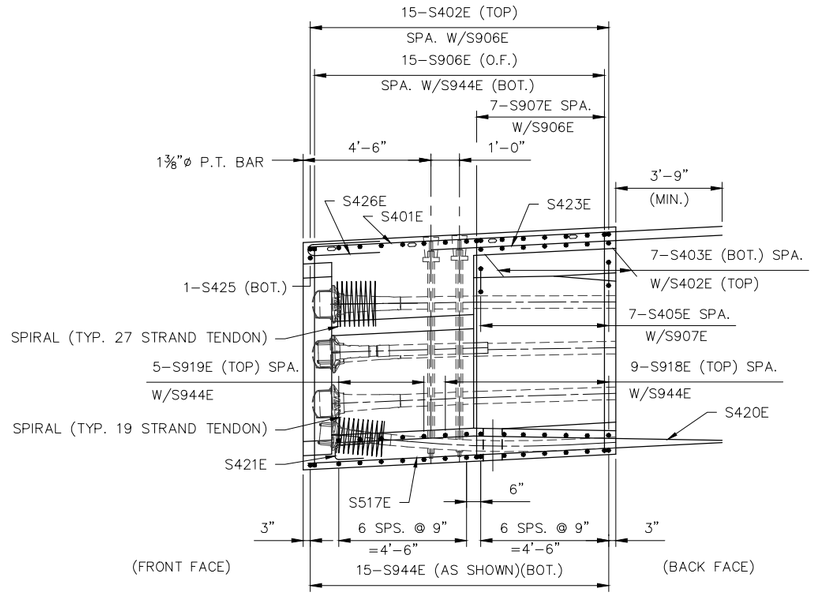

SECTION A-A
(TYPICAL SEGMENT REINFORCEMENT ONLY)

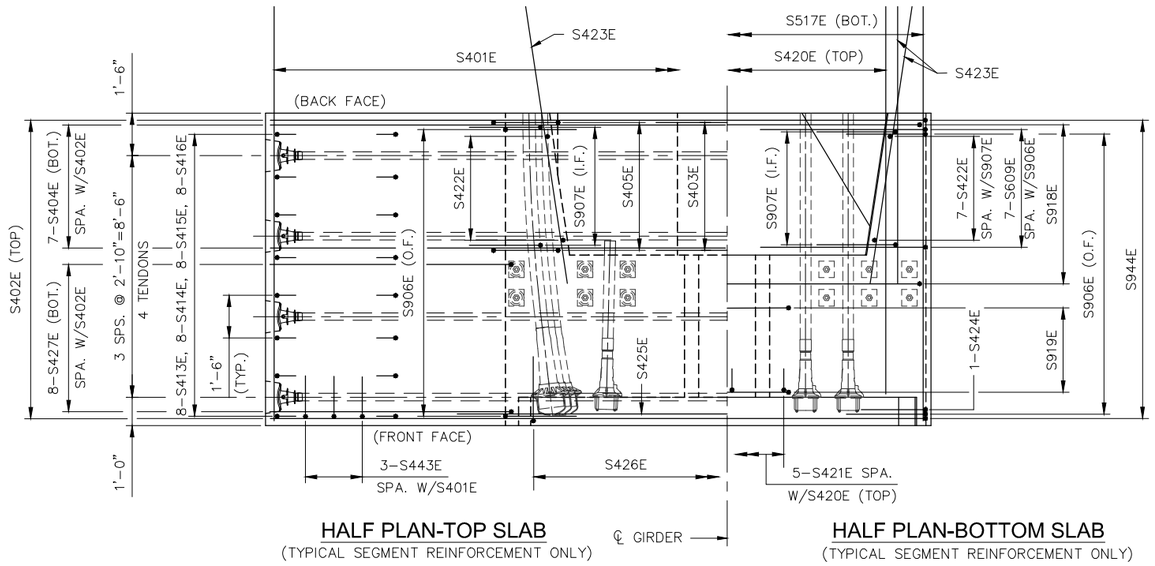

HALF PLAN-TOP SLAB
(TYPICAL SEGMENT REINFORCEMENT ONLY)

℄ GIRDER

HALF PLAN-BOTTOM SLAB
(TYPICAL SEGMENT REINFORCEMENT ONLY)

NOTES:

MIN. CONCRETE COVER = 2" EXTERIOR, 1½" INTERIOR (UNLESS OTHERWISE NOTED).

SPACE ALL REINFORCING TO CLEAR POST-TENSIONING AND DRAIN HOLE LOCATIONS.

SEE "END DIAPHRAGM P.T. DETAILS" FOR ANCHOR LOCATIONS.

SEE "CONTINUITY POST-TENSIONING LAYOUT" SHEETS FOR TENDON PATHS.

SEE "FUTURE POST-TENSIOINING LAYOUT" FOR FUTURE TENDON PATH.

I.F. DENOTES INSIDE FACE.
O.F. DENOTES OUTSIDE FACE.
F.F. DENOTES FRONT FACE.
B.F. DENOTES BACK FACE.

NO.	DATE	BY	CHECK	DESIGN	REVISION / SUBMITTAL

DESIGNED BY: NMP | CHECKED BY: JL
DRAWN BY: JWH | CHECKED BY: JL

AECOM

90% SUBMISSION - 01/22/16

METROPOLITAN COUNCIL

SOUTHWEST Green Line LRT Extension

CIVIL - VOLUME 4D
EXCELSIOR BLVD
BRIDGE 27C10
END DIAPHRAGM REINFORCEMENT 1

DISCIPLINE: STRUCTURE
SHEET NAME: CBR27C10-BRG-SUP-040

SHEET 96 OF 174

Jan, 18 2016 12:45 pm V:\3400_ADC\CAD\SEGMENT E1\PLAN SHEETS\STRUCTURES\CBR27C10\CBR27C10-BRG-SUP-040.dwg By: hodgesj

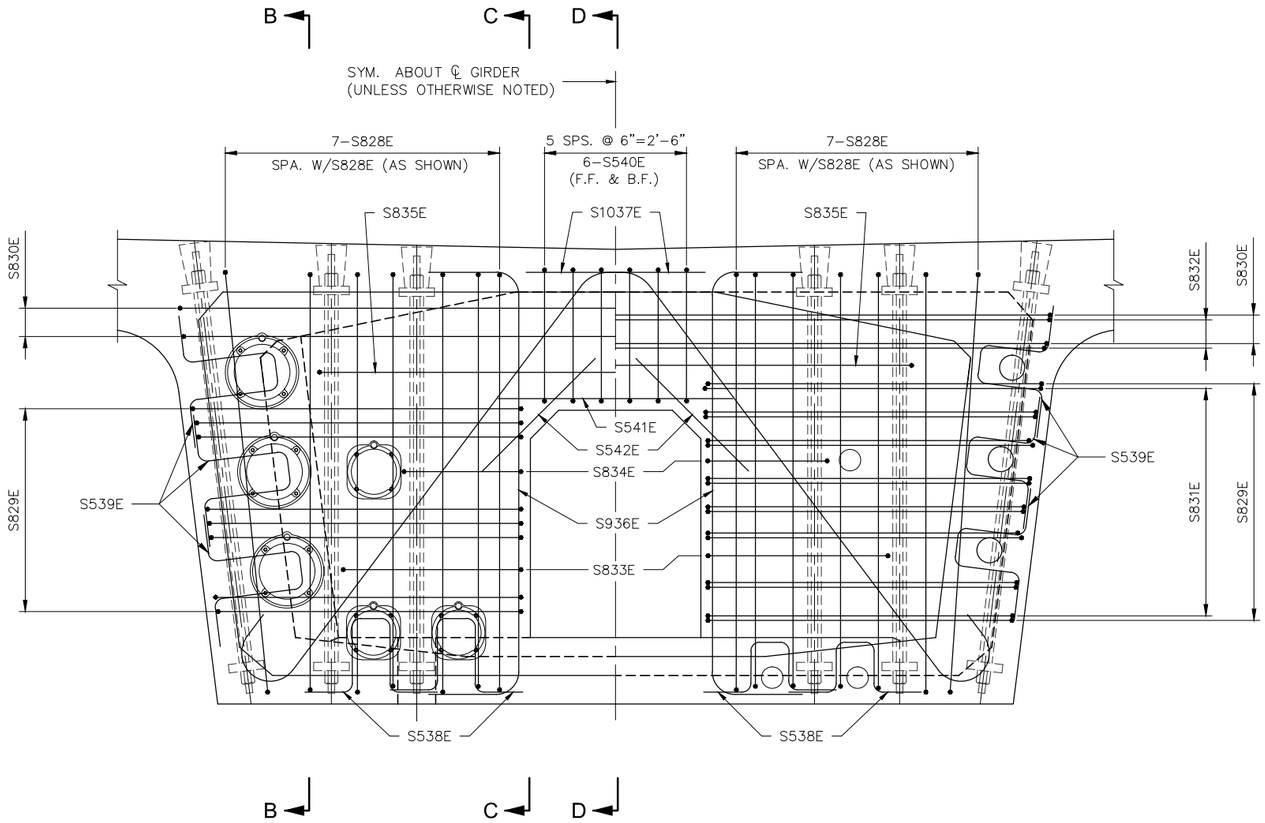

HALF SECTION-FRONT FACE
(TYPICAL SEGMENT REINFORCEMENT NOT SHOWN FOR CLARITY)

HALF SECTION-BACK FACE
(TYPICAL SEGMENT REINFORCEMENT NOT SHOWN FOR CLARITY)

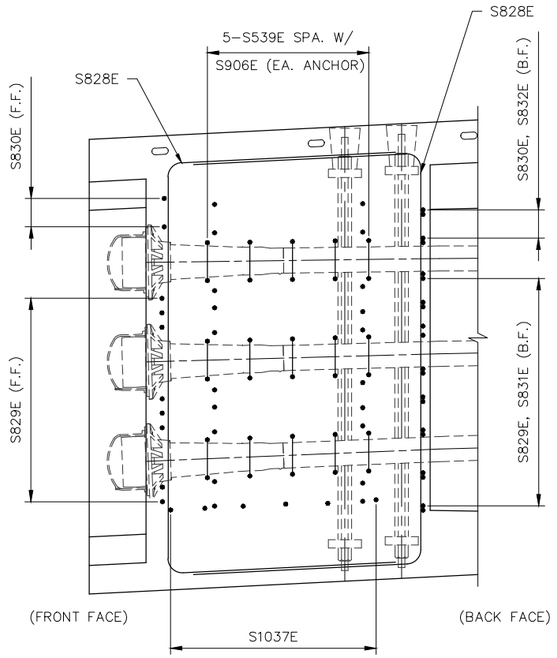

SECTION B-B
(TYPICAL SEGMENT REINFORCEMENT NOT SHOWN FOR CLARITY)

NOTES:

MIN. CONCRETE COVER = 2" EXTERIOR, 1½" INTERIOR (UNLESS OTHERWISE NOTED).

SPACE ALL REINFORCING TO CLEAR POST–TENSIONING AND DRAIN HOLE LOCATIONS.

SEE "END DIAPHRAGM P.T. DETAILS" FOR ANCHOR LOCATIONS.

SEE "CONTINUITY POST–TENSIONING LAYOUT" SHEETS FOR TENDON PATHS.

SEE "FUTURE POST–TENSIOINING LAYOUT" FOR FUTURE TENDON PATH.

I.F. DENOTES INSIDE FACE.
O.F. DENOTES OUTSIDE FACE.
F.F. DENOTES FRONT FACE.
B.F. DENOTES BACK FACE.

NO.	DATE	BY	CHECK	DESIGN	REVISION / SUBMITTAL

DESIGNED BY: NMP CHECKED BY: JL
DRAWN BY: JWH CHECKED BY: JL

AECOM

90% SUBMISSION - 01/22/16

METROPOLITAN COUNCIL

SOUTHWEST Green Line LRT Extension

CIVIL - VOLUME 4D
EXCELSIOR BLVD
BRIDGE 27C10
END DIAPHRAGM REINFORCEMENT 2

DISCIPLINE: STRUCTURE
SHEET NAME: CBR27C10-BRG-SUP-041

SHEET 97 OF 174

Jan, 18 2016 12:45 pm V:\3400_ADC\CAD\SEGMENT E1\PLAN SHEETS\STRUCTURES\CBR27C10\CBR27C10-BRG-SUP-041.dwg By: hodgesj

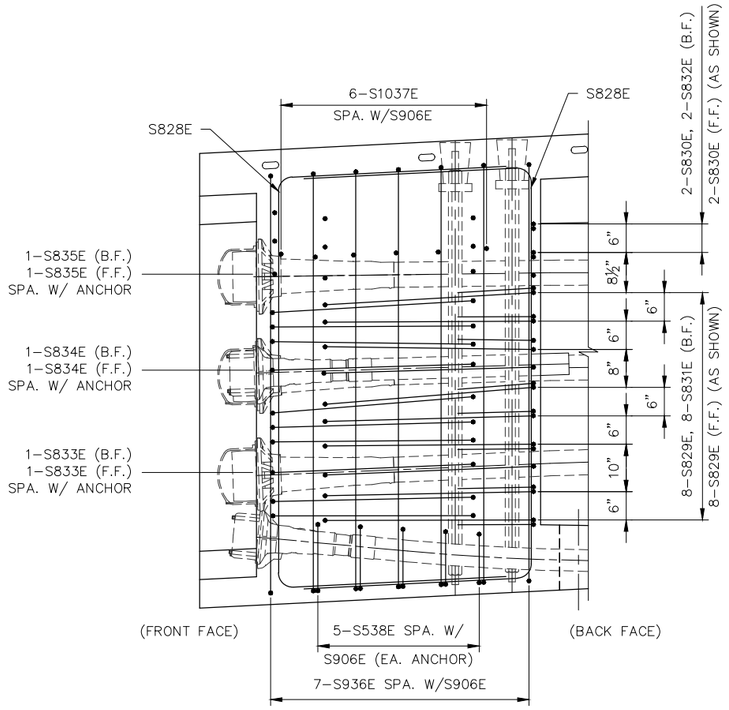

SECTION C-C
(TYPICAL SEGMENT REINFORCEMENT NOT SHOWN FOR CLARITY)

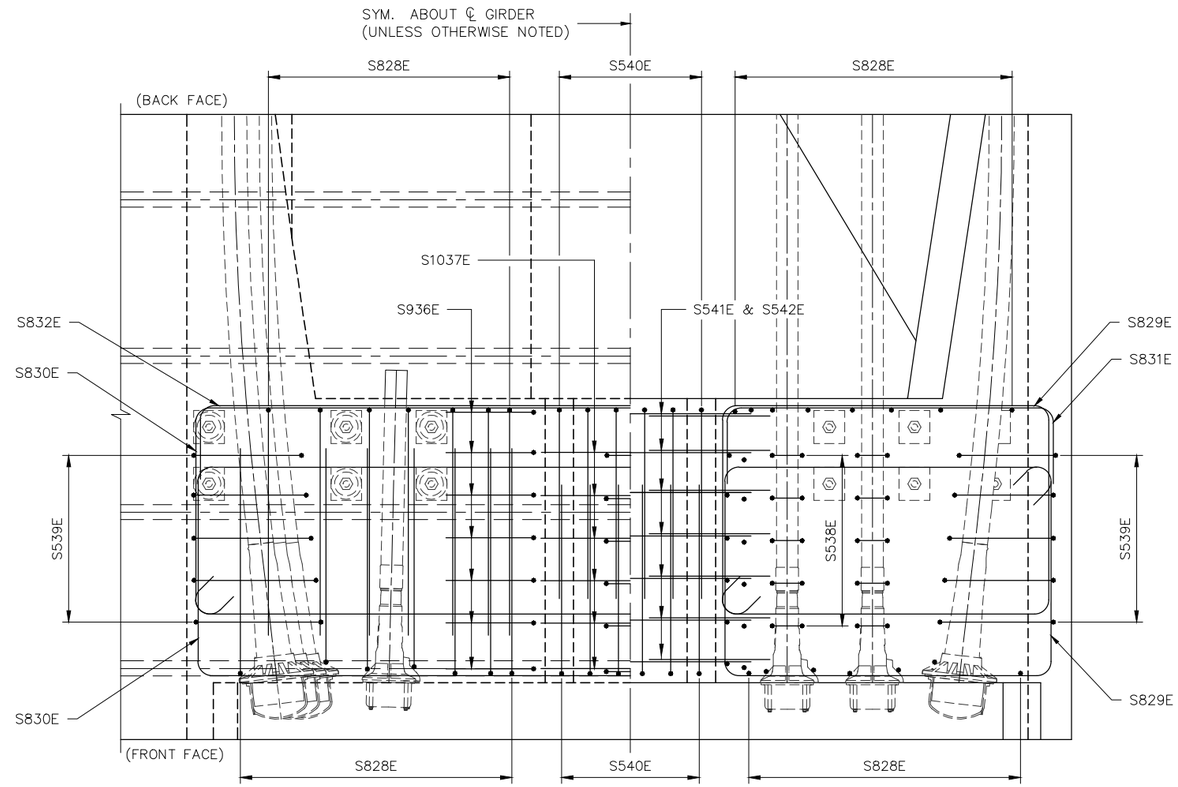

HALF PLAN-TOP SLAB
(TYPICAL SEGMENT REINFORCEMENT NOT SHOWN FOR CLARITY)

HALF PLAN-BOTTOM SLAB
(TYPICAL SEGMENT REINFORCEMENT NOT SHOWN FOR CLARITY)

NOTES:

MIN. CONCRETE COVER = 2" EXTERIOR, 1½" INTERIOR (UNLESS OTHERWISE NOTED).

SPACE ALL REINFORCING TO CLEAR POST–TENSIONING AND DRAIN HOLE LOCATIONS.

SEE "END DIAPHRAGM P.T. DETAILS" FOR ANCHOR LOCATIONS.

SEE "CONTINUITY POST–TENSIONING LAYOUT" SHEETS FOR TENDON PATHS.

SEE "FUTURE POST–TENSIOINING LAYOUT" FOR FUTURE TENDON PATH.

I.F. DENOTES INSIDE FACE.
O.F. DENOTES OUTSIDE FACE.
F.F. DENOTES FRONT FACE.
B.F. DENOTES BACK FACE.

NO.	DATE	BY	CHECK	DESIGN	REVISION / SUBMITTAL

DESIGNED BY: NMP CHECKED BY: JL
DRAWN BY: JWH CHECKED BY: JL

AECOM

90% SUBMISSION - 01/22/16

METROPOLITAN COUNCIL

SOUTHWEST
Green Line LRT Extension

CIVIL - VOLUME 4D
EXCELSIOR BLVD
BRIDGE 27C10
END DIAPHRAGM REINFORCEMENT 3

DISCIPLINE: STRUCTURE
SHEET NAME: CBR27C10-BRG-SUP-042

SHEET 98 OF 174

Jan, 18 2016 12:45 pm v:\3400_ADC\CAD\SEGMENT E1\PLAN SHEETS\STRUCTURES\CBR27C10\CBR27C10-BRG-SUP-040.dwg By: hodgesj

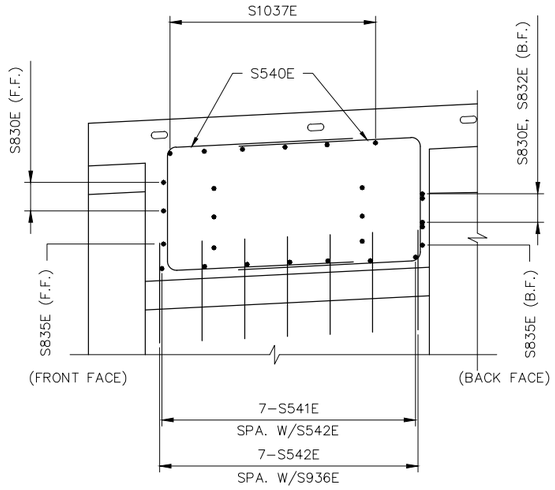

SECTION D-D

(TYPICAL SEGMENT REINFORCEMENT NOT SHOWN FOR CLARITY)

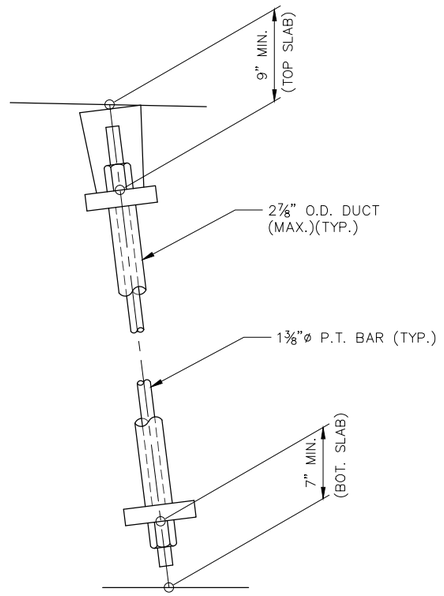

P.T. BAR DETAIL

NOTES:

MIN. CONCRETE COVER = 2" EXTERIOR, 1½" INTERIOR (UNLESS OTHERWISE NOTED).

SPACE ALL REINFORCING TO CLEAR POST–TENSIONING AND DRAIN HOLE LOCATIONS.

SEE "END DIAPHRAGM P.T. DETAILS" FOR ANCHOR LOCATIONS.

SEE "CONTINUITY POST–TENSIONING LAYOUT" SHEETS FOR TENDON PATHS.

SEE "FUTURE POST–TENSIOINING LAYOUT" FOR FUTURE TENDON PATH.

I.F. DENOTES INSIDE FACE.
O.F. DENOTES OUTSIDE FACE.
F.F. DENOTES FRONT FACE.
B.F. DENOTES BACK FACE.

NO.	DATE	BY	CHECK	DESIGN	REVISION / SUBMITTAL

DESIGNED BY: NMP CHECKED BY: JL
DRAWN BY: JWH CHECKED BY: JL

AECOM

90% SUBMISSION - 01/22/16

METROPOLITAN COUNCIL

SOUTHWEST Green Line LRT Extension

CIVIL - VOLUME 4D
EXCELSIOR BLVD
BRIDGE 27C10
END DIAPHRAGM REINFORCEMENT 4

DISCIPLINE: STRUCTURE
SHEET NAME: CBR27C10-BRG-SUP-043

SHEET 99 OF 174

Jan, 18 2016 12:46 pm V:\3400_ADC\CAD\SEGMENT E1\PLAN SHEETS\STRUCTURES\CBR27C10\CBR27C10-BRG-SUP-040.dwg By: hodgesj

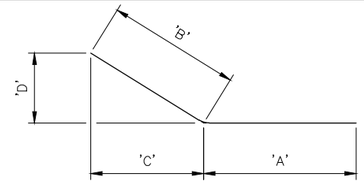

BAR	'A'	'B'	'C'	'D'
S402E	16'–1"	16'–1"	16'–0⅞"	7¾"
S404E	9'–9"	6'–0"	5'–8⅛"	1'–11⅜"
S609E	6'–0"	1'–0"	2¾"	11⅝"
S420E	4'–10"	8'–9"	8'–8¾"	7"
S427E	8'–6"	1'–9"	11⅝"	1'–5½"

S402E, S404E, S609E, S420E, S427E

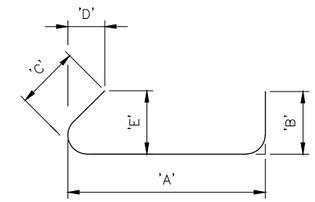

BAR	'A'	'B'	'C'	'D'	'E'
S414E	1'–11"	8"	8"	¾"	8⅛"
S415E	1'–8"	8"	8"	¾"	8⅛"

S414E, S415E

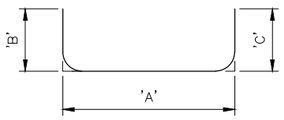

BAR	'A'	'B'	'C'
S919E	4'–6"	1'–7"	1'–7"
S421E	7½"	8"	8"
S426E	5"	2'–0"	2'–0"
S831E	VARIES FROM 5'–3½" TO 5'–9½"	1'–4"	1'–4"
S832E	VARIES FROM 13'–0" TO 13'–2"	1'–4"	1'–4"
S936E	7'–5"	1'–7"	1'–7"
S443E	7"	1'–6"	1'–6"

S919E, S421E, S426E, S831E, S832E, S936E, S443E

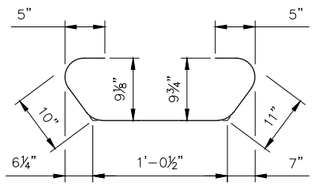

S405E

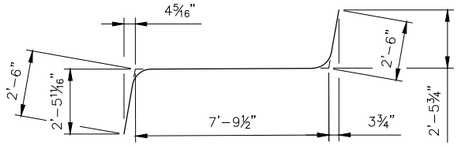

S907E

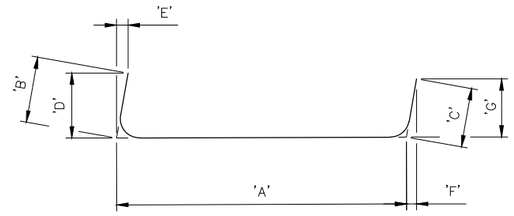

BAR	'A'	'B'	'C'	'D'	'E'	'F'	'G'
S906E	7'–10"	2'–6"	2'–6"	2'–5¹¹⁄₁₆"	4⅝"	3¾"	2'–5¾"
S828E	7'–2"	4'–0"	4'–0"	3'–11¹¹⁄₁₆"	2⅜"	2⅜"	3'–11¹¹⁄₁₆"
S540E	2'–4½"	3'–4"	3'–4"	3'–3¹⁵⁄₁₆"	2"	2"	3'–3¹⁵⁄₁₆"

S906E, S828E, S540E

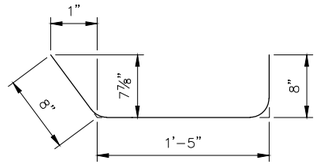

S413E

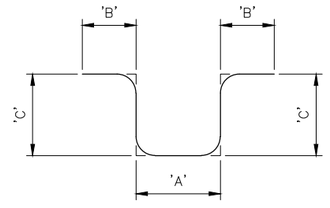

BAR	'A'	'B'	'C'
S416E	8½"	8"	1'–8"
S538E	9"	10"	VARIES FROM 1'–1" TO 1'–5"
S539E	9"	10"	VARIES FROM 1'–2" TO 1'–9"

S416E, S538E, S539E

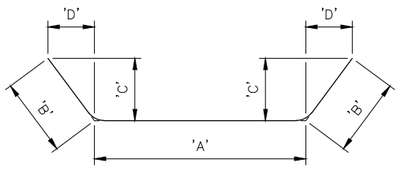

BAR	'A'	'B'	'C'	'D'
S918E	13'–6"	1'–7"	1'–6⅞"	2⅜"
S424E	1'–4½"	8"	5¼"	6"
S944E	13'–8½"	1'–7"	1'–6⅞"	2⅜"

S918E, S424E, S944E

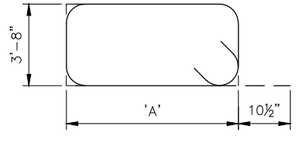

BAR	'A'
S829E	VARIES FROM 5'–3½" TO 5'–9½"
S830E	VARIES FROM 13'–0" TO 13'–2"
S833E	3'–2"
S834E	2'–1"
S835E	10'–6"

S829E, S830E, S833E, S834E, S835E

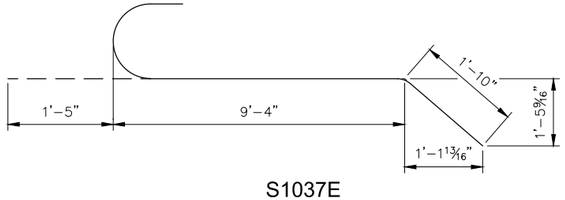

S1037E

BILL OF REINFORCEMENT END DIAPHRAGM (ONE SEGMENT ONLY)

BAR	NO.	LENGTH	SHAPE	LOCATION
S401E	51	14'–8"	STR.	LONGITUDINAL TOP SLAB
S402E	15	32'–2"		TOP SLAB
S403E	7	5'–0"	STR.	TOP SLAB
S404E	14	15'–9"		TOP SLAB
S405E	14	3'–9"		TOP SLAB
S906E	30	12'–10"		WEB
S907E	14	12'–10"		WEB
S609E	14	7'–0"		BOTTOM SLAB
S413E	16	2'–9"		WALKWAY
S414E	8	3'–2"		WALKWAY
S415E	8	2'–11"		WALKWAY
S416E	8	5'–5"		WALKWAY
S517E	25	14'–8"	STR.	LONGITUDINAL
S918E	9	16'–8"		BOTTOM SLAB
S919E	5	7'–8"		BOTTOM SLAB
S420E	11	14'–9"–		BOTTOM SLAB
S421E	5	2'–0"		BOTTOM SLAB
S422E	14	7'–7"	STR.	WEB
S423E	33	10'–3"	STR.	WEB/TOP SLAB
S424E	2	2'–9"		BOTTOM SLAB
S425E	1	17'–6"	STR.	TOP SLAB
S426E	15	4'–5"		TOP SLAB
S427E	16	10'–3"		TOP SLAB
S828E	28	15'–2"		DIAPHRAGM VERTICAL
S829E	32	20'–2" *		DIAPHRAGM HORIZONTAL
S830E	4	35'–3" *		DIAPHRAGM HORIZONTAL
S831E	16	8'–3" *		DIAPHRAGM HORIZONTAL
S832E	2	15'–9" *		DIAPHRAGM HORIZONTAL
S833E	4	15'–5"		DIAPHRAGM HORIZONTAL
S834E	4	13'–3"		DIAPHRAGM HORIZONTAL
S835E	2	30'–1"		DIAPHRAGM HORIZONTAL
S936E	14	10'–7"		DIAPHRAGM VERTICAL
S1037E	12	12'–7"		DIAPHRAGM VERTICAL
S538E	20	4'–11" *		DIAPHRAGM
S539E	30	5'–4" *		DIAPHRAGM
S540E	12	9'–1"		DIAPHRAGM VERTICAL
S541E	7	4'–2"	STR.	DIAPHRAGM
S542E	14	2'–9"	STR.	DIAPHRAGM
S443E	6	3'–7"		TOP SLAB
S944E	15	16'–11"		BOTTOM SLAB

* DENOTES AVERAGE LENGTH.

LEGEND

S 4 07 E

SUPERSTRUCTURE

BAR SIZE

BAR DESIGNATION

E = EPOXY
S = STAINLESS STEEL
BLANK FOR BLACK BAR

NO.	DATE	BY	CHECK	DESIGN	REVISION / SUBMITTAL

DESIGNED BY: NMP CHECKED BY: JL
DRAWN BY: JWH CHECKED BY: JL

AECOM

90% SUBMISSION - 01/22/16

METROPOLITAN COUNCIL

SOUTHWEST Green Line LRT Extension

CIVIL - VOLUME 4D
EXCELSIOR BLVD
BRIDGE 27C10
END DIAPHRAGM REINFORCEMENT 5

DISCIPLINE: STRUCTURE

SHEET NAME: CBR27C10-BRG-SUP-044

SHEET 100 OF 174

Jan, 18 2016 12:46 pm V:\3400_ADC\CAD\SEGMENT E1\PLAN SHEETS\STRUCTURES\CBR27C10\CBR27C10-BRG-SUP-040.dwg By: hodgesj

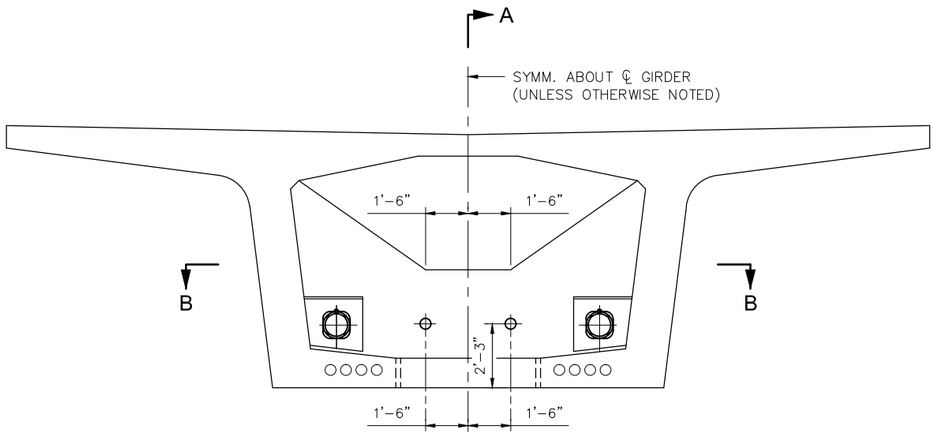

CROSS SECTION

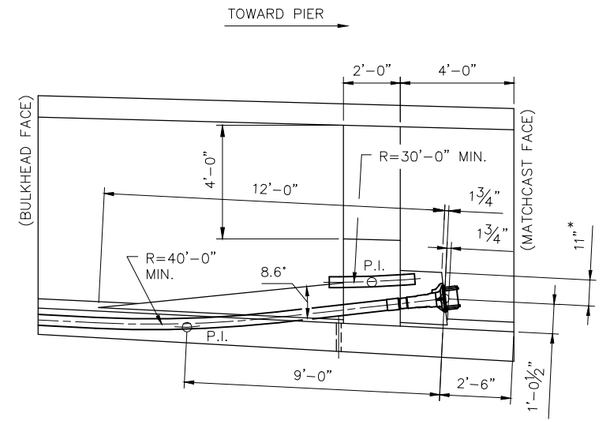

* TOP OF BLISTER TO BE PARALLEL TO THE TOP OF BOTTOM SLAB.

SECTION A-A

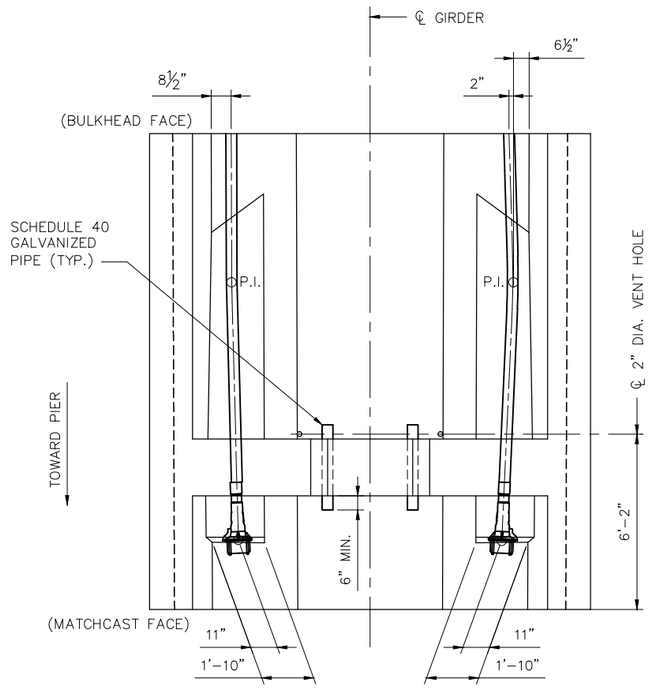

HALF SECTION B-B
(DEVIATION D–IB)

HALF SECTION B-B
(DEVIATION D–IA)

NOTES:

FOR TYPICAL DIMENSIONS NOT SHOWN, SEE "CANTILEVER SEGMENT DETAILS" SHEET.

FOR LOCATION OF TYPE I DEVIATION RIBS, SEE "CONTINUITY POST–TENSIONING LAYOUT" SHEETS.

NO.	DATE	BY	CHECK	DESIGN	REVISION / SUBMITTAL

DESIGNED BY: ETN CHECKED BY: JWJ
DRAWN BY: JWH CHECKED BY: JL

AECOM

90% SUBMISSION - 01/22/16

METROPOLITAN COUNCIL

SOUTHWEST Green Line LRT Extension

CIVIL - VOLUME 4D
EXCELSIOR BLVD
BRIDGE 27C10
TYPE I DEVIATION RIB DETAILS

DISCIPLINE: STRUCTURE
SHEET NAME: CBR27C10-BRG-SUP-045

SHEET 101 OF 174

Jan, 18 2016 03:38 pm v:\3400_ADC\CAD\SEGMENT E1\PLAN SHEETS\STRUCTURES\CBR27C10\CBR27C10-BRG-SUP-045.dwg By: songers

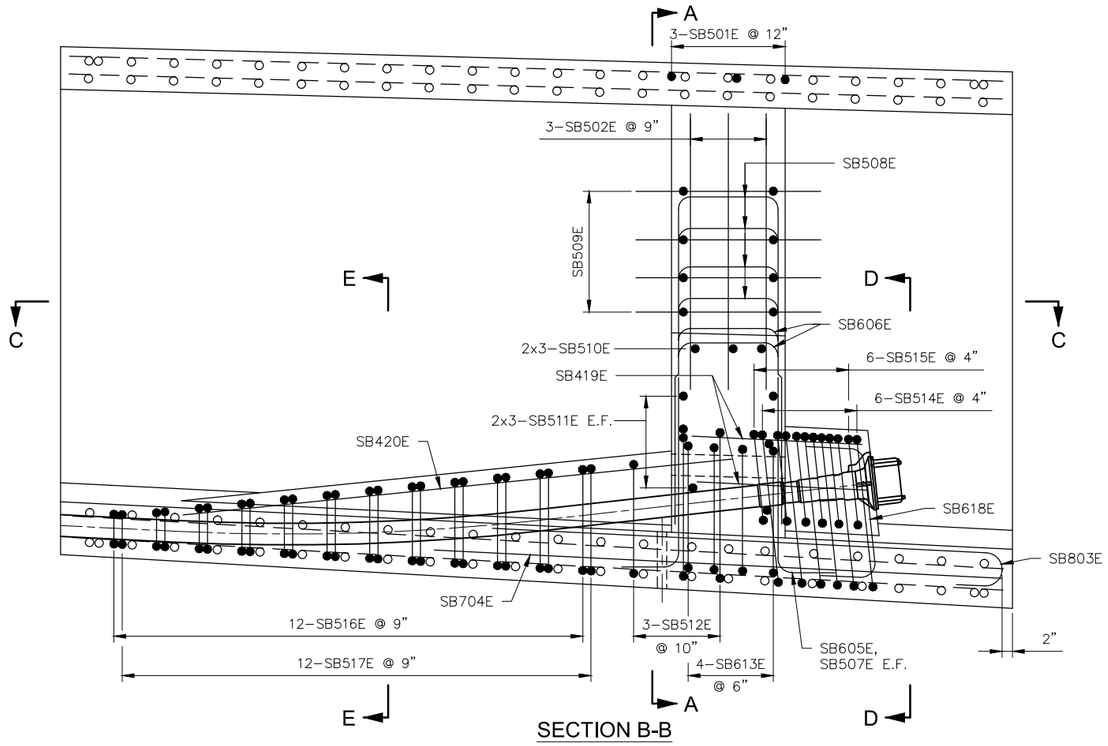

SECTION B-B

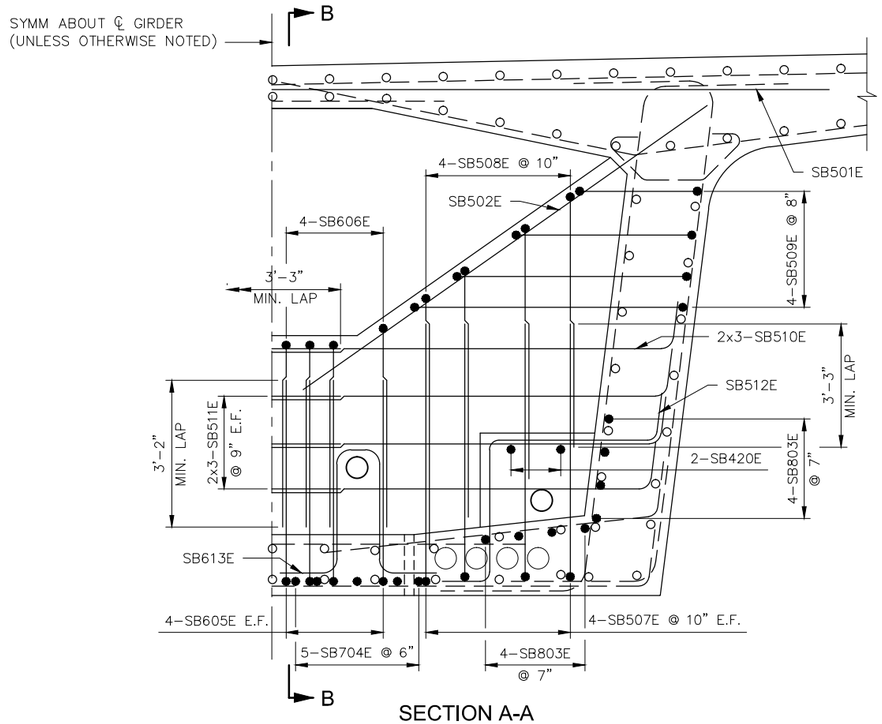

SECTION A-A

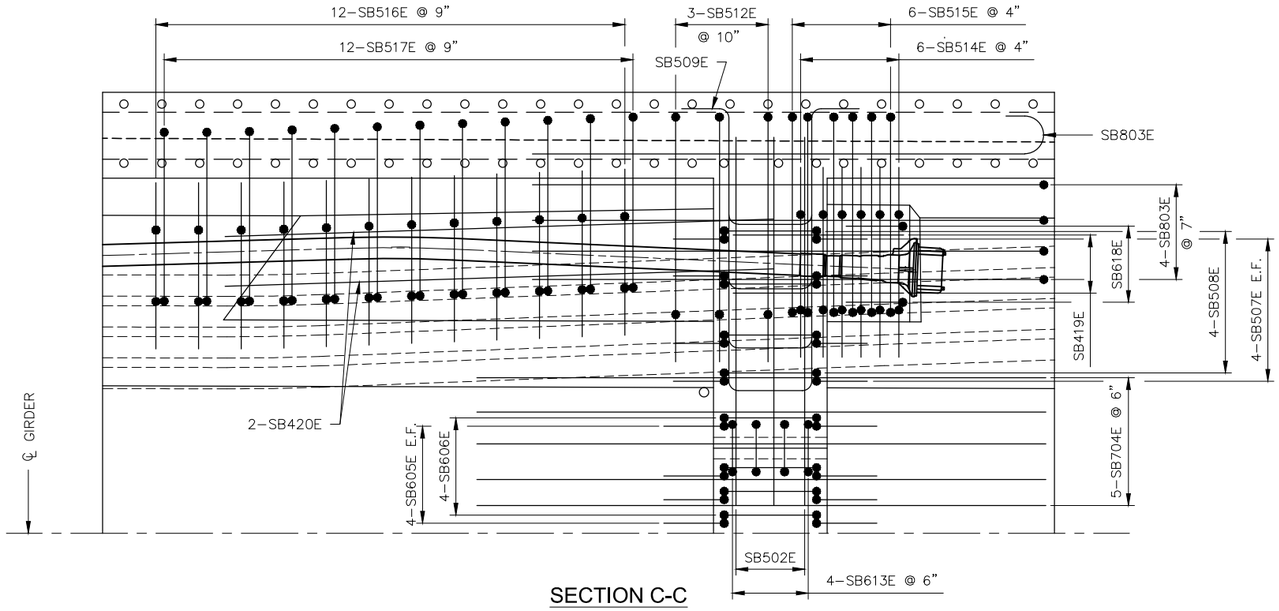

SECTION C-C

NOTES:

SPIRAL REINFORCEMENT, OMITTED FOR CLARITY, SHALL BE DETERMINED BY THE POST–TENSIONING SUPPLIER.

FOR LOCATION OF TYPE I DEVIATION RIBS SEE "CONTINUITY POST–TENSIONING LAYOUT" SHEETS.

NO.	DATE	BY	CHECK	DESIGN	REVISION / SUBMITTAL

DESIGNED BY: DST CHECKED BY: JL
DRAWN BY: SGS CHECKED BY: JL

AECOM

90% SUBMISSION - 01/22/16

METROPOLITAN COUNCIL

SOUTHWEST Green Line LRT Extension

CIVIL - VOLUME 4D
EXCELSIOR BLVD
BRIDGE 27C10
TYPE I DEVIATION RIB REINFORCEMENT 1

DISCIPLINE: STRUCTURE
SHEET NAME: CBR27C10-BRG-SUP-046

SHEET 102 OF 174

Jan, 18 2016 03:40 pm v:\3400_ADC\CAD\SEGMENT E1\PLAN SHEETS\STRUCTURES\CBR27C10\CBR27C10-BRG-SUP-046.dwg By: songers

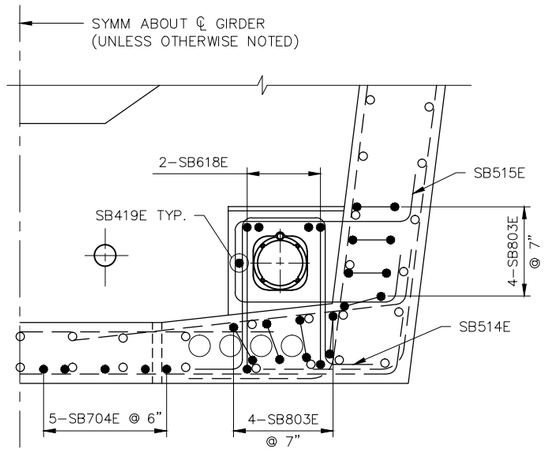

SECTION D-D

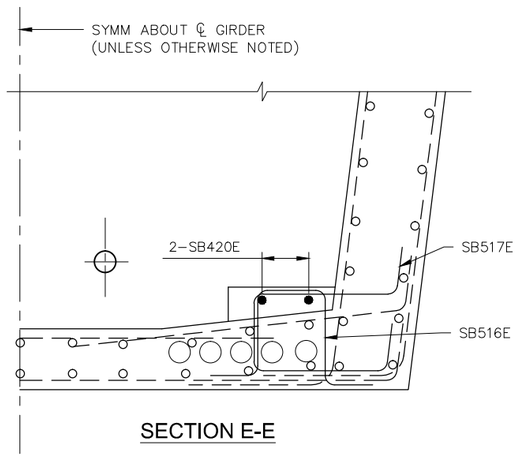

SECTION E-E

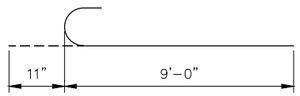

SB803E

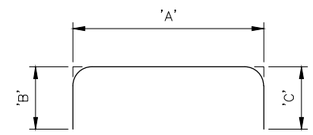

BAR	'A'	'B'	'C'
SB606E	1'–9"	* 3'–6"	* 3'–6"
SB508E	1'–9"	* 4'–10½"	* 4'–10½"
SB618E	* 2'–6"	1'–0"	1'–0"

SB606E, SB508E, SB618E

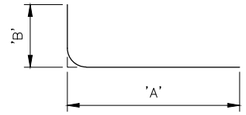

BAR	'A'	'B'
SB605E	* 3'–7"	1'–0"
SB507E	* 4'–8"	10"
SB510E	8'–8"	10"
SB511E	8'–5"	10"

SB605E, SB507E,
SB510E, SB511E

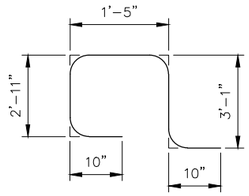

SB515E

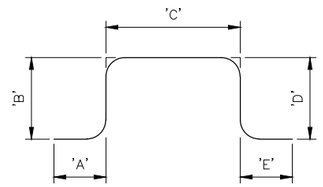

BAR	'A'	'B'	'C'	'D'	'E'
SB509E	10"	VAR. FROM 2'–0" TO 4'–8"	1'–7"	VAR. FROM 2'–0" TO 4'–8"	10"
SB613E	1'–0"	2'–6"	11"	2'–6"	1'–0"
SB514E	10"	* 2'–8½"	* 1'–5"	* 2'–8½"	10"
SB516E	10"	VAR. FROM 8¾" * TO 1'–10¾"	* 1'–2½"	VAR. FROM 8¾" * TO 1'–10¾"	10"

SB509E, SB613E, SB514E, SB516E

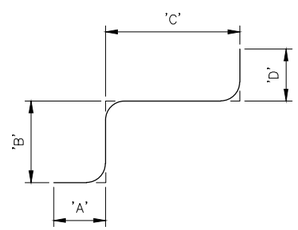

BAR	'A'	'B'	'C'	'D'
SB512E	10"	VAR. FROM 2'–0" * TO 2'–7½"	* 3'–1"	10"
SB517E	10"	VAR. FROM 8¾" * TO 1'–10¾"	* 2'–6"	10"

SB512E, SB517E

BILL OF REINFORCEMENT
TYPE I DEVIATION RIB - ONE LOCATION

BAR	NO.	LENGTH	SHAPE	LOCATION
SB501E	3	20'–0"	———	TOP SLAB
SB502E	6	9'–6"	———	RIB
SB803E	16	9'–11"	———	WEB AND BOTTOM SLAB
SB704E	10	10'–0"	———	BOTTOM SLAB
SB605E	16	4'–7"	———	RIB
SB606E	8	8'–9"	———	RIB
SB507E	16	5'–6"	———	RIB
SB508E	8	11'–6"	———	RIB
SB509E	8	* 9'–11"	———	RIB
SB510E	6	9'–6"	———	RIB
SB511E	12	9'–3"	———	RIB
SB512E	6	* 7'–1"	———	ANCHOR BLOCK
SB613E	8	7'–11"	———	RIB
SB514E	12	8'–6"	———	ANCHOR BLOCK
SB515E	12	9'–1"	———	ANCHOR BLOCK
SB516E	24	* 5'–6"	———	ANCHOR BLOCK
SB517E	24	* 5'–6"	———	ANCHOR BLOCK
SB618E	4	4'–6"	———	ANCHOR BLOCK
SB419E	6	3'–0"	———	ANCHOR BLOCK
SB420E	4	9'–9"	———	ANCHOR BLOCK

NOTES:

* DENOTES A DIMENSION THAT VARIES AT EACH DEVIATION RIB LOCATION.
** DENOTES AVERAGE LENGTH.

LEGEND

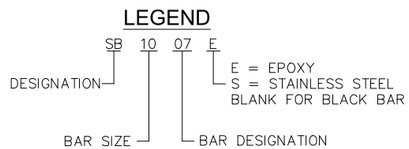

NO.	DATE	BY	CHECK	DESIGN	REVISION / SUBMITTAL

DESIGNED BY: DST CHECKED BY: JL
DRAWN BY: SGS CHECKED BY: JL

AECOM

90% SUBMISSION - 01/22/16

METROPOLITAN COUNCIL

SOUTHWEST Green Line LRT Extension

CIVIL - VOLUME 4D
EXCELSIOR BLVD
BRIDGE 27C10
TYPE I DEVIATION RIB REINFORCEMENT 2

DISCIPLINE: STRUCTURE
SHEET NAME: CBR27C10-BRG-SUP-047

SHEET 103 OF 174

Jan. 18 2016 03:40 pm v:\3400_ADC\CAD\SEGMENT E1\PLAN SHEETS\STRUCTURES\CBR27C10\CBR27C10-BRG-SUP-046.dwg By: songers

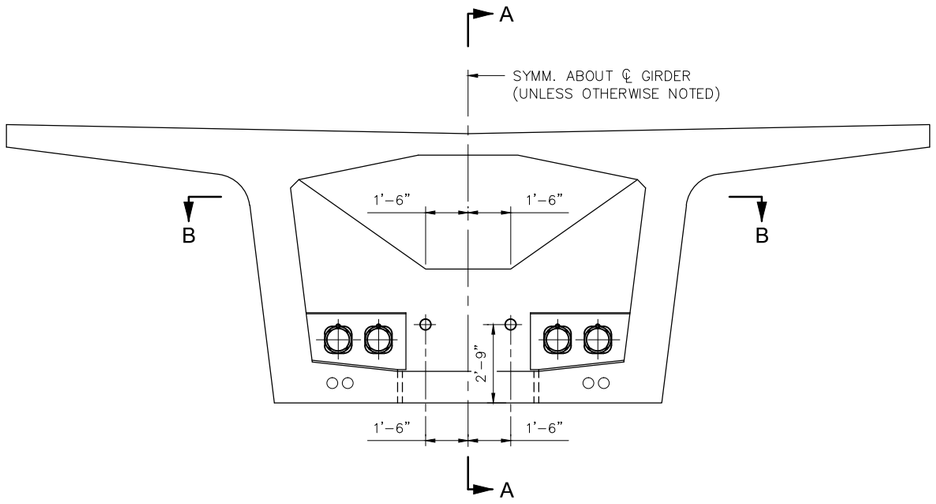

CROSS SECTION

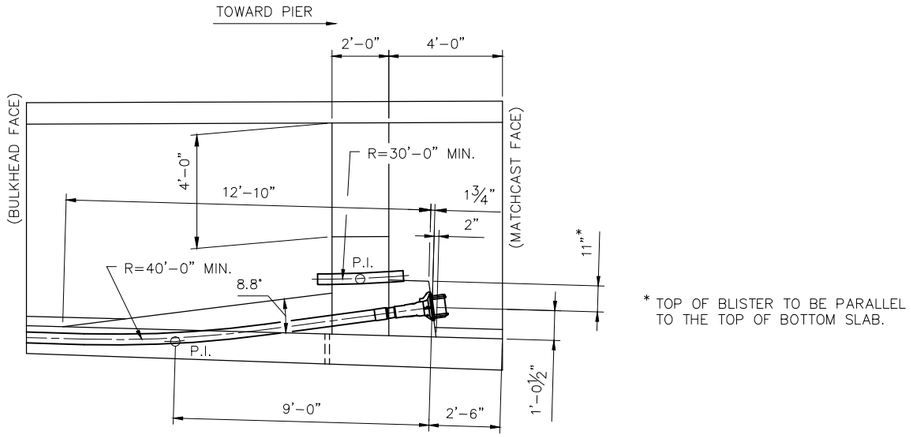

* TOP OF BLISTER TO BE PARALLEL TO THE TOP OF BOTTOM SLAB.

SECTION A-A

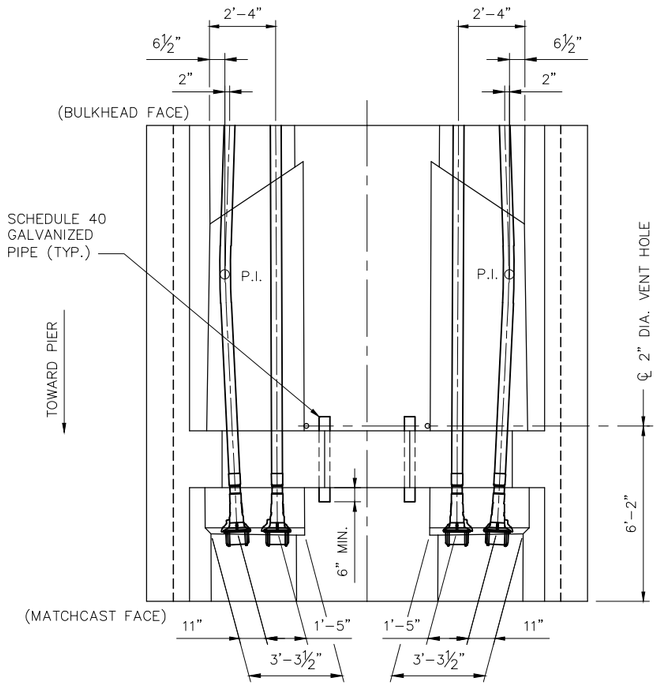

SECTION B-B

NOTES:

FOR TYPICAL DIMENSIONS NOT SHOWN, SEE "CANTILEVER SEGMENT DETAILS" SHEET.

FOR LOCATION OF TYPE II DEVIATION RIBS, SEE "CONTINUITY POST–TENSIONING LAYOUT" SHEETS.

NO.	DATE	BY	CHECK	DESIGN	REVISION / SUBMITTAL

DESIGNED BY: ETN | CHECKED BY: JWJ
DRAWN BY: JWH | CHECKED BY: JL

AECOM

90% SUBMISSION - 01/22/16

METROPOLITAN COUNCIL

SOUTHWEST Green Line LRT Extension

CIVIL - VOLUME 4D
EXCELSIOR BLVD
BRIDGE 27C10
TYPE II DEVIATION RIB DETAILS

DISCIPLINE: STRUCTURE

SHEET NAME: CBR27C10-BRG-SUP-048

SHEET 104 OF 174

Jan, 18 2016 03:43 pm V:\3400_ADC\CAD\SEGMENT E1\PLAN SHEETS\STRUCTURES\CBR27C10\CBR27C10-BRG-SUP-048.dwg By: songers

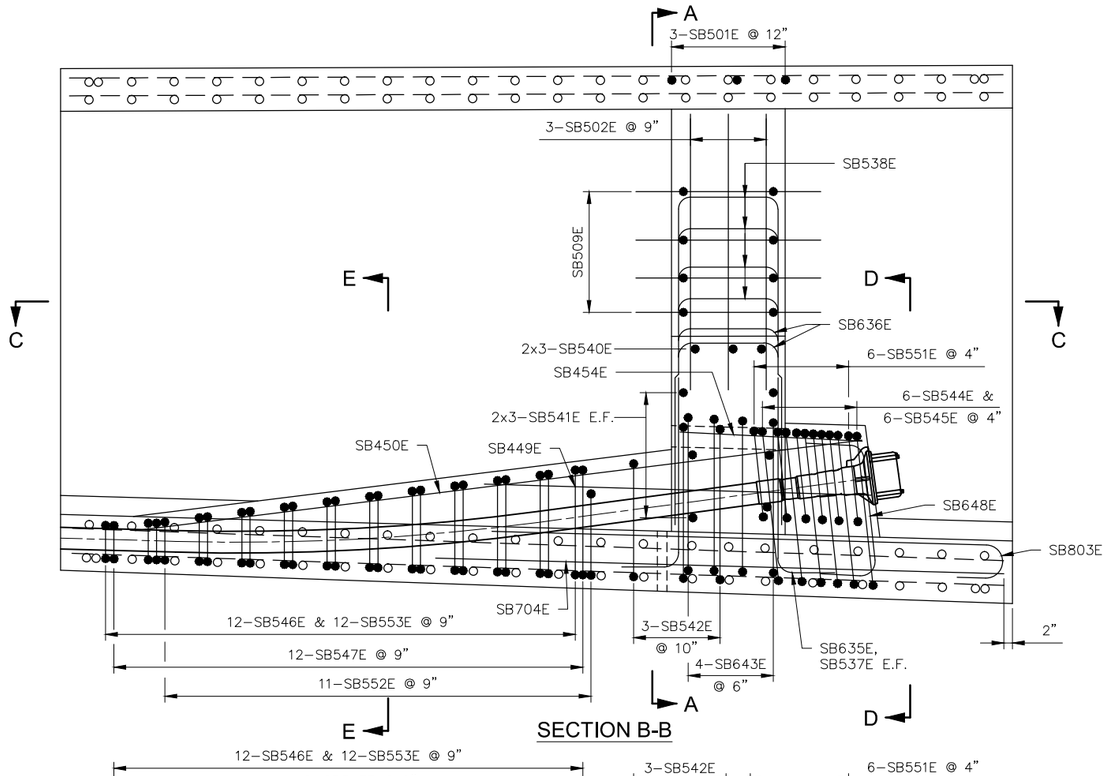

SECTION B-B

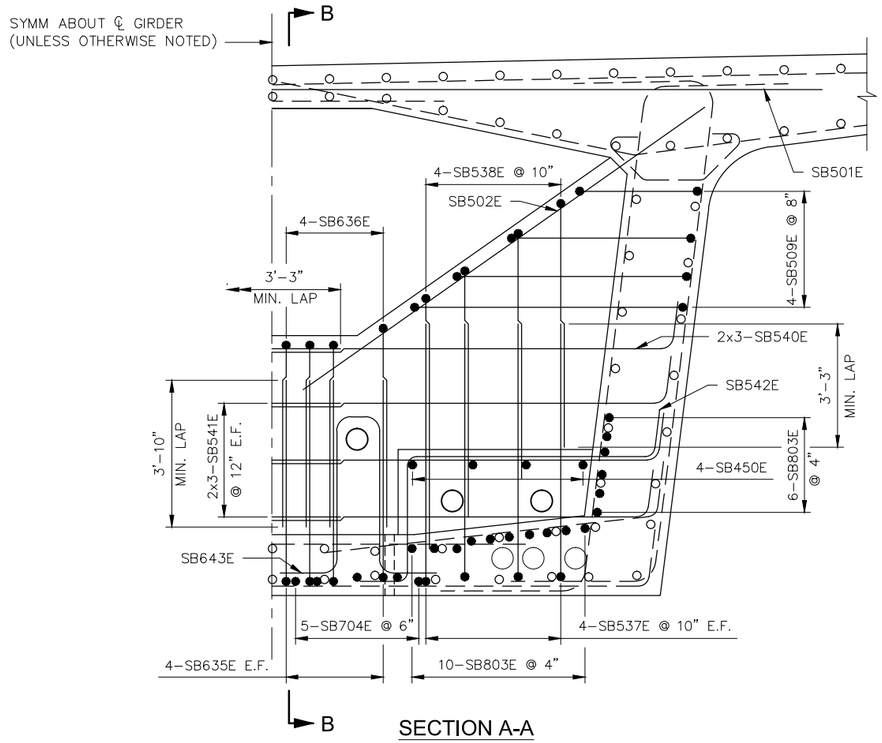

SECTION A-A

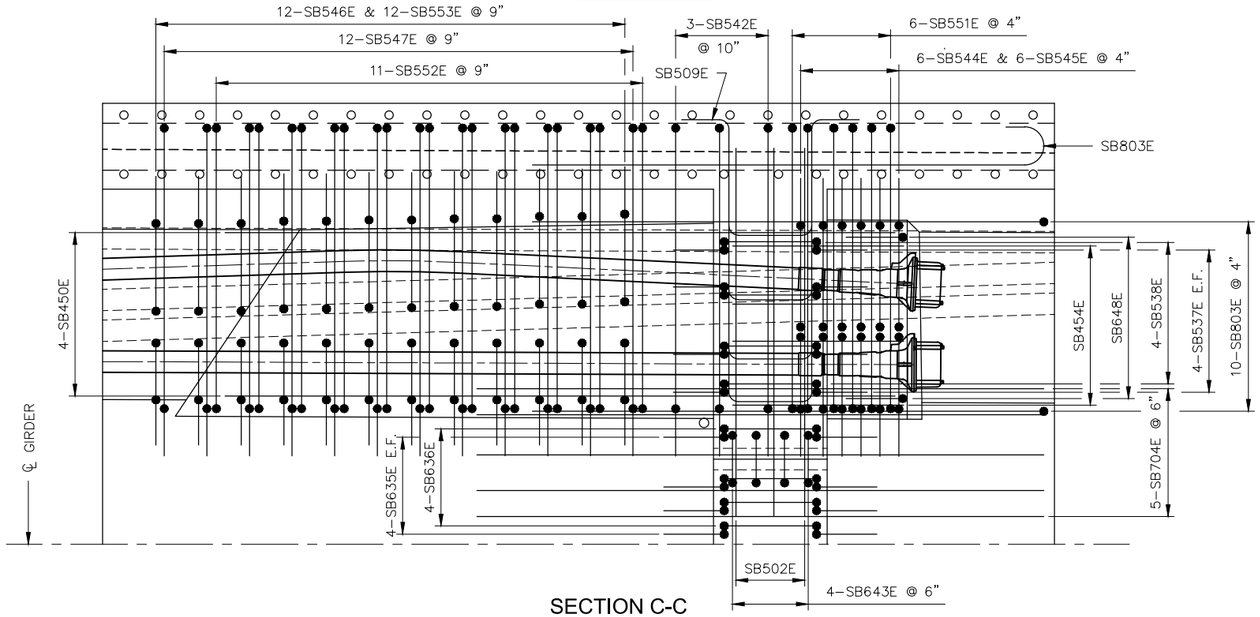

SECTION C-C

NOTES:

SPIRAL REINFORCEMENT, OMITTED FOR CLARITY, SHALL BE DETERMINED BY THE POST–TENSIONING SUPPLIER.

FOR LOCATION OF TYPE II DEVIATION RIBS SEE "CONTINUITY POST–TENSIONING LAYOUT" SHEETS.

NO.	DATE	BY	CHECK	DESIGN	REVISION / SUBMITTAL

DESIGNED BY: DST | CHECKED BY: JL
DRAWN BY: SGS | CHECKED BY: JL

AECOM

90% SUBMISSION - 01/22/16

METROPOLITAN COUNCIL

SOUTHWEST Green Line LRT Extension

CIVIL - VOLUME 4D
EXCELSIOR BLVD
BRIDGE 27C10
TYPE II DEVIATION RIB REINFORCEMENT 1

DISCIPLINE: STRUCTURE
SHEET NAME: CBR27C10-BRG-SUP-049

SHEET 105 OF 174

Jan. 18 2016 03:45 pm v:\3400_ADC\CAD\SEGMENT E1\PLAN SHEETS\STRUCTURES\CBR27C10\CBR27C10-BRG-SUP-049.dwg By: songers

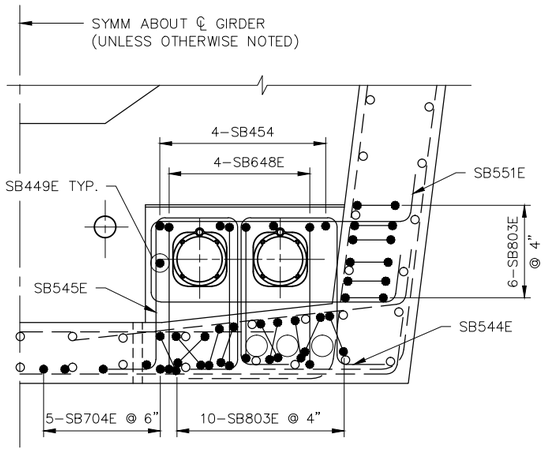

SECTION D-D

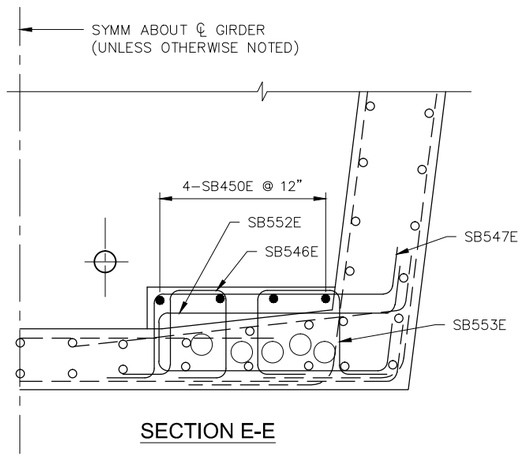

SECTION E-E

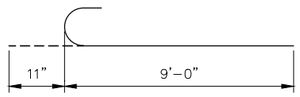

SB803E

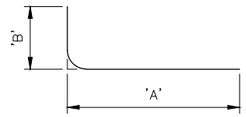

BAR	'A'	'B'
SB635E	* 4'–2"	1'–0"
SB537E	* 4'–11"	10"
SB540E	8'–9"	10"
SB541E	8'–7"	10"

SB635E, SB537E,
SB540E, SB541E

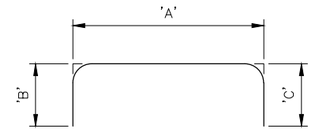

BAR	'A'	'B'	'C'
SB636E	1'–9"	* 4'–2"	* 4'–2"
SB538E	1'–9"	* 4'–11"	* 4'–11"
SB648E	* 2'–6"	1'–0"	1'–0"

SB636E, SB538E, SB648E

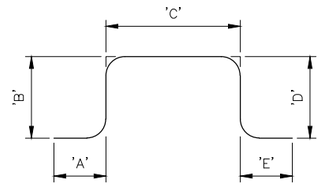

BAR	'A'	'B'	'C'	'D'	'E'
SB509E	10"	VAR. FROM 2'–0" TO 4'–8"	1'–7"	VAR. FROM 2'–0" TO 4'–8"	10"
SB643E	1'–0"	3'–0"	11"	3'–0"	1'–0"

SB509E, SB643E

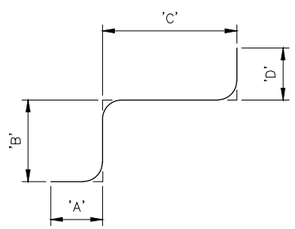

BAR	'A'	'B'	'C'	'D'
SB542E	10"	VAR. FROM 2'–1" * TO 2'–9"	* 4'–5"	10"
SB547E	10"	VAR. FROM 9" * TO 1'–11½"	* 4'–4"	10"

SB542E, SB547E

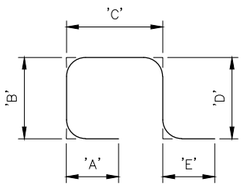

BAR	'A'	'B'	'C'	'D'	'E'
SB544E	10"	* 2'–8½"	1'–9½"	* 2'–8½"	10"
SB545E	10"	* 2'–8½"	1'–5"	* 2'–8½"	10"
SB546E	10"	VAR. FROM 9" * TO 1'–11½"	1'–0½"	VAR. FROM 9" * TO 1'–11½"	10"
SB551E	10"	4'–4½"	1'–5"	4'–6½"	10"
SB552E	10"	4'–1"	VAR. FROM *9" TO 1'–6"	4'–1"	10"
SB553E	10"	VAR. FROM 9" * TO 1'–11½"	1'–7"	VAR. FROM 9" * TO 1'–11½"	10"

SB544E, SB545E, SB546E,
SB551E, SB552E, SB553

BILL OF REINFORCEMENT
TYPE II DEVIATION RIB - ONE LOCATION

BAR	NO.	LENGTH	SHAPE	LOCATION
SB501E	3	20'–0"	———	TOP SLAB
SB502E	6	9'–6"	———	RIB
SB803E	32	9'–11"	⊂——	WEB AND BOTTOM SLAB
SB704E	10	10'–0"	———	BOTTOM SLAB
SB635E	16	5'–2"	⌐——	RIB
SB636E	8	10'–1"	⌐—⌐	RIB
SB537E	16	5'–9"	⌐——	RIB
SB538E	8	11'–7"	⌐—⌐	RIB
SB509E	8	** 9'–11"	⌐⌐	RIB
SB540E	6	9'–7"	⌐—⌐	RIB
SB541E	12	9'–5"	⌐—⌐	RIB
SB542E	6	** 8'–6"	⌐⌐	ANCHOR BLOCK
SB643E	8	8'–11"	⌐⌐	RIB
SB544E	12	8'–11"	⌐⌐	ANCHOR BLOCK
SB545E	12	8'–6"	⌐⌐	ANCHOR BLOCK
SB546E	24	** 5'–5"	⌐⌐	ANCHOR BLOCK
SB547E	24	** 7'–4"	⌐⌐	ANCHOR BLOCK
SB648E	8	4'–6"	⌐	ANCHOR BLOCK
SB449E	2	6'–7"	———	ANCHOR BLOCK
SB450E	8	12'–9"	———	ANCHOR BLOCK
SB551E	12	12'–0"	⌐⌐	ANCHOR BLOCK
SB552E	22	** 11'–0"	⌐⌐	ANCHOR BLOCK
SB553E	24	** 6'–0"	⌐⌐	ANCHOR BLOCK
SB454E	8	3'–0"	———	ANCHOR BLOCK

NOTES:
* DENOTES A DIMENSION THAT VARIES AT EACH DEVIATION RIB LOCATION.
** DENOTES AVERAGE LENGTH.

LEGEND

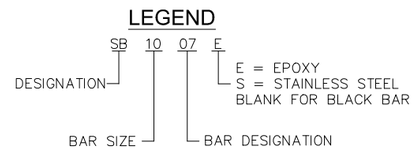

NO.	DATE	BY	CHECK	DESIGN	REVISION / SUBMITTAL

DESIGNED BY: DST CHECKED BY: JL
DRAWN BY: SGS CHECKED BY: JL

AECOM

90% SUBMISSION - 01/22/16

METROPOLITAN COUNCIL

SOUTHWEST Green Line LRT Extension

CIVIL - VOLUME 4D
EXCELSIOR BLVD
BRIDGE 27C10
TYPE II DEVIATION RIB REINFORCEMENT 2

DISCIPLINE: STRUCTURE
SHEET NAME: CBR27C10-BRG-SUP-050

SHEET 106 OF 174

Jan. 18 2016 03:45 pm v:\3400_ADC\CAD\SEGMENT E1\PLAN SHEETS\STRUCTURES\CBR27C10\CBR27C10-BRG-SUP-049.dwg By: songers

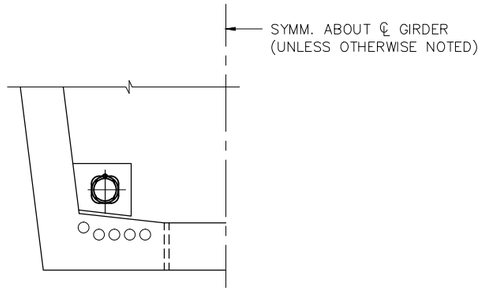

PARTIAL CROSS SECTION

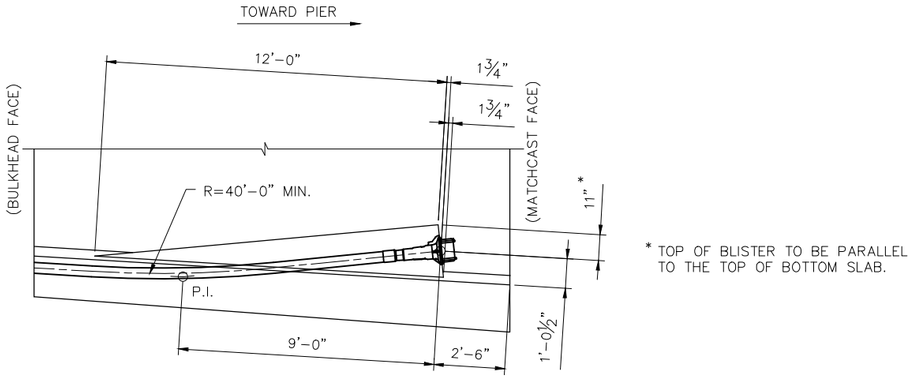

* TOP OF BLISTER TO BE PARALLEL TO THE TOP OF BOTTOM SLAB.

SECTION A-A

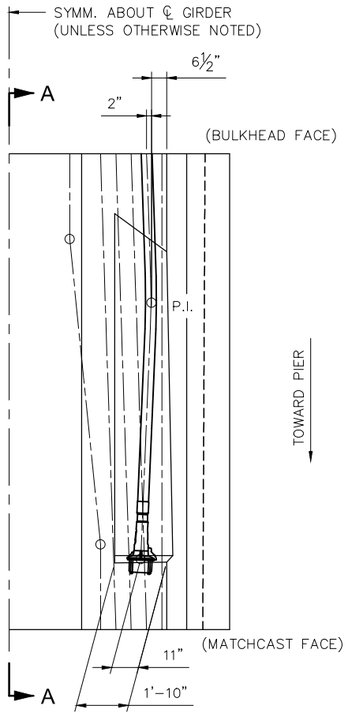

PARTIAL PLAN
(ANCHOR A-IA)

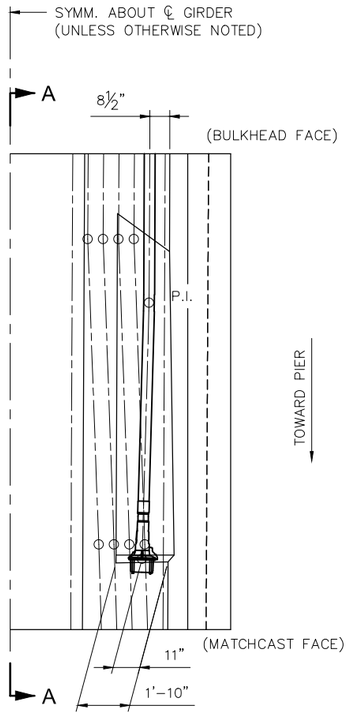

PARTIAL PLAN
(ANCHOR A-IB)

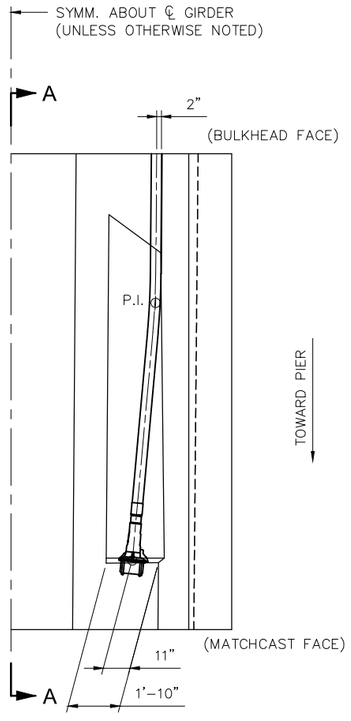

PARTIAL PLAN
(ANCHOR A-IC)

NOTES:

FOR TYPICAL DIMENSIONS NOT SHOWN, SEE "CANTILEVER SEGMENT DETAILS" SHEET.

FOR LOCATION OF BOTTOM SLAB ANCHOR BLOCKS, SEE "CONTINUITY POST-TENSIONING LAYOUT" SHEETS.

NO.	DATE	BY	CHECK	DESIGN	REVISION / SUBMITTAL

DESIGNED BY: DST CHECKED BY: JL
DRAWN BY: SGS CHECKED BY: JL

AECOM

90% SUBMISSION - 01/22/16

METROPOLITAN COUNCIL

SOUTHWEST Green Line LRT Extension

CIVIL - VOLUME 4D
EXCELSIOR BLVD
BRIDGE 27C10
BOTTOM SLAB ANCHOR BLOCK DETAILS 1

DISCIPLINE: STRUCTURE
SHEET NAME: CBR27C10-BRG-SUP-051

SHEET 107 OF 174

Jan, 18 2016 03:48 pm v:\3400_ADC\CAD\SEGMENT E1\PLAN SHEETS\STRUCTURES\CBR27C10\CBR27C10-BRG-SUP-051.dwg By: songers

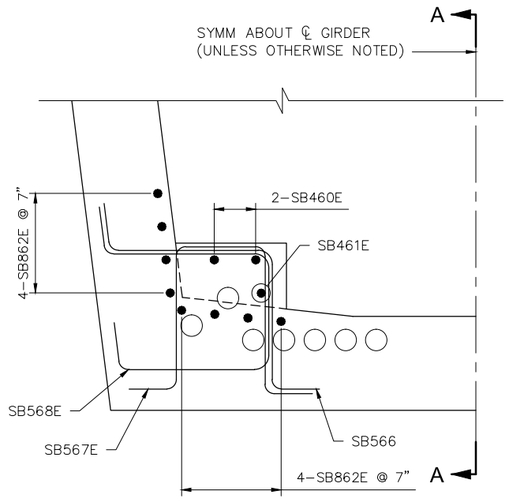

SECTION B-B

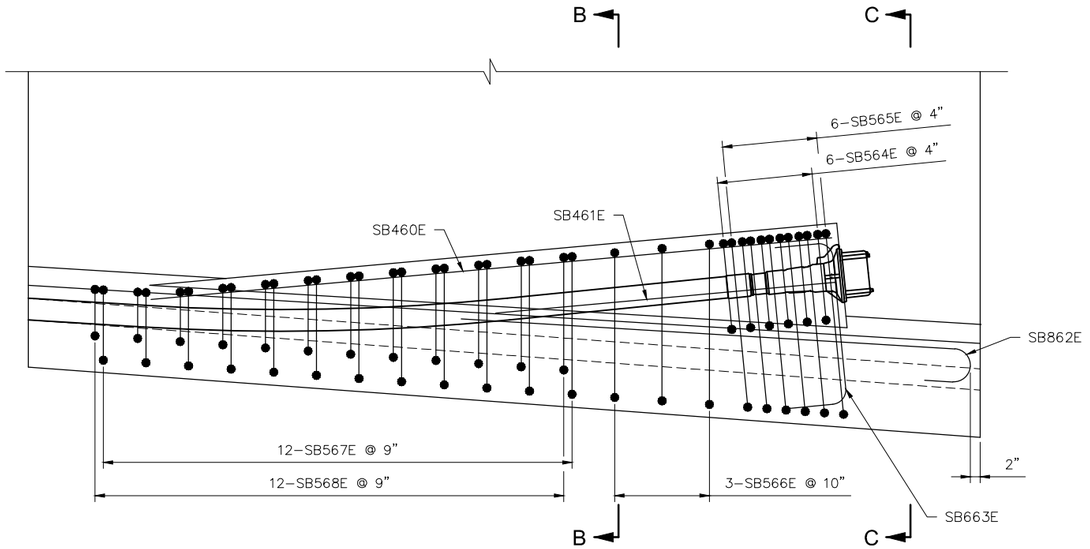

SECTION A-A

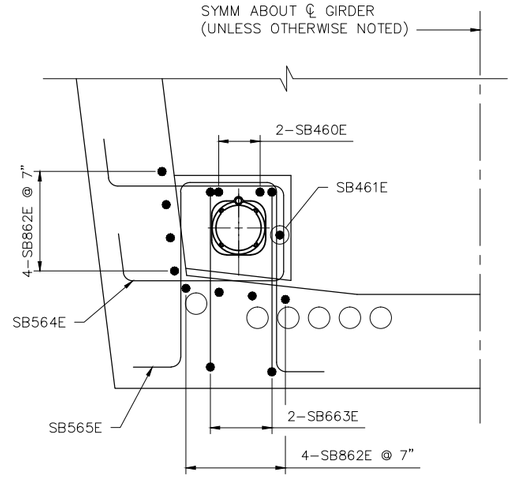

SECTION C-C

NOTES:

SPIRAL REINFORCEMENT, NOT SHOWN FOR CLARITY, SHALL BE DETERMINED BY THE POST–TENSIONING SUPPLIER.

FOR LOCATION OF BOTTOM SLAB ANCHOR BLOCKS SEE "CONTINUITY POST–TENSIONING LAYOUT" SHEETS.

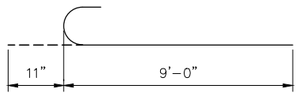

SB862E

SB663E

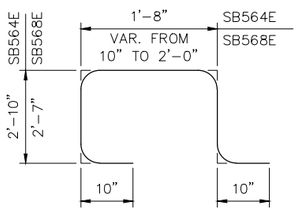

SB564E, SB568E

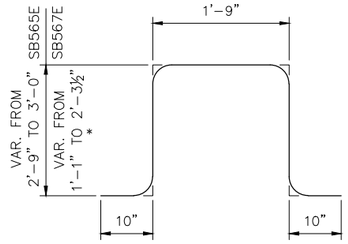

SB565E, SB567E

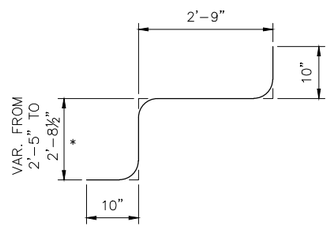

SB566E

BILL OF REINFORCEMENT
ONE ANCHOR BLOCK

BAR	NO.	LENGTH	SHAPE	LOCATION
SB460E	2	12'–0"	——	ANCHOR BLOCK
SB461E	1	6'–0"	——	ANCHOR BLOCK
SB862E	8	9'–11"	⊂——	WEB AND BOTTOM SLAB
SB663E	2	4'–11"	⌋	ANCHOR BLOCK
SB564E	6	9'–0"	⌋⌊	ANCHOR BLOCK
SB565E	6	** 9'–2"	⌋⌊⌋	ANCHOR BLOCK
SB566E	3	** 7'–0"	⌋⌊	ANCHOR BLOCK
SB567E	12	** 6'–10"	⌋⌊⌋	ANCHOR BLOCK
SB568E	12	** 8'–5"	⌋⌊	ANCHOR BLOCK

NOTES:

* DENOTES A DIMENSION THAT VARIES AT EACH ANCHOR BLOCK LOCATION.
** DENOTES AVERAGE LENGTH.

LEGEND

SB 10 07 E
- SB — DESIGNATION
- 10 — BAR SIZE
- 07 — BAR DESIGNATION
- E = EPOXY; S = STAINLESS STEEL; BLANK FOR BLACK BAR

NO.	DATE	BY	CHECK	DESIGN	REVISION / SUBMITTAL

DESIGNED BY: DST CHECKED BY: JL
DRAWN BY: SGS CHECKED BY: JL

AECOM

90% SUBMISSION - 01/22/16

METROPOLITAN COUNCIL

SOUTHWEST Green Line LRT Extension

CIVIL - VOLUME 4D
EXCELSIOR BLVD
BRIDGE 27C10
BOTTOM SLAB ANCHOR BLOCK DETAILS 2

DISCIPLINE: STRUCTURE
SHEET NAME: CBR27C10-BRG-SUP-052

SHEET 108 OF 174

Jan, 18 2016 03:50 pm v:\3400_ADC\CAD\SEGMENT E1\PLAN SHEETS\STRUCTURES\CBR27C10\CBR27C10-BRG-SUP-052.dwg By: songers

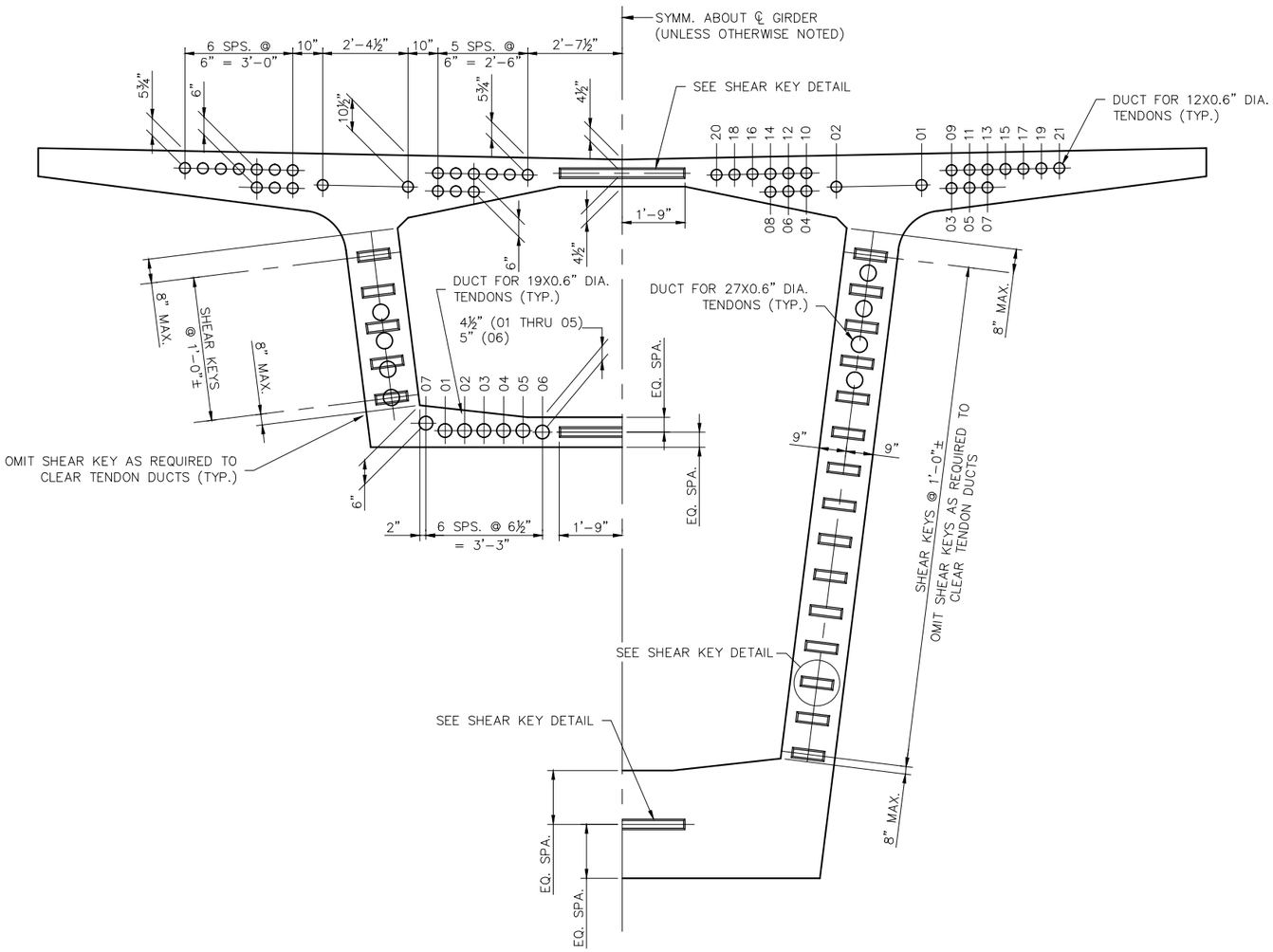

MINIMUM DEPTH SECTION

TYPICAL SECTION

MAXIMUM DEPTH SECTION

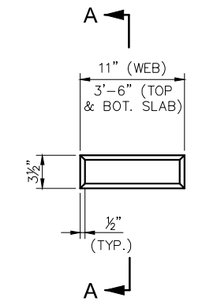

SHEAR KEY DETAIL

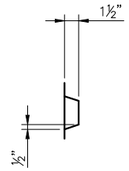

SECTION A-A

NOTES:

FOR SEGMENT DIMENSIONS, SEE "CANTILEVER SEGMENT DETAILS" SHEET.

NO.	DATE	BY	CHECK	DESIGN	REVISION / SUBMITTAL

DESIGNED BY: ETN CHECKED BY: JWJ
DRAWN BY: JWH CHECKED BY: JWJ

AECOM

90% SUBMISSION - 01/22/16

METROPOLITAN COUNCIL

SOUTHWEST Green Line LRT Extension

CIVIL - VOLUME 4D
EXCELSIOR BLVD
BRIDGE 27C10
BULKHEAD DETAILS

DISCIPLINE: STRUCTURE

SHEET NAME: CBR27C10-BRG-SUP-053

SHEET 109 OF 174

Jan, 15 2016 12:38 pm V:\3400_ADC\CAD\SEGMENT E1\PLAN SHEETS\STRUCTURES\CBR27C10\CBR27C10-BRG-SUP-053.dwg By: hodgesj

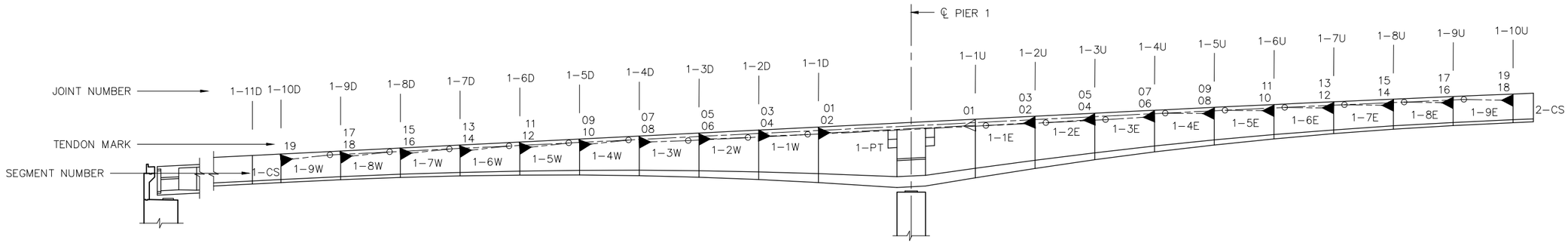

SECTION A-A

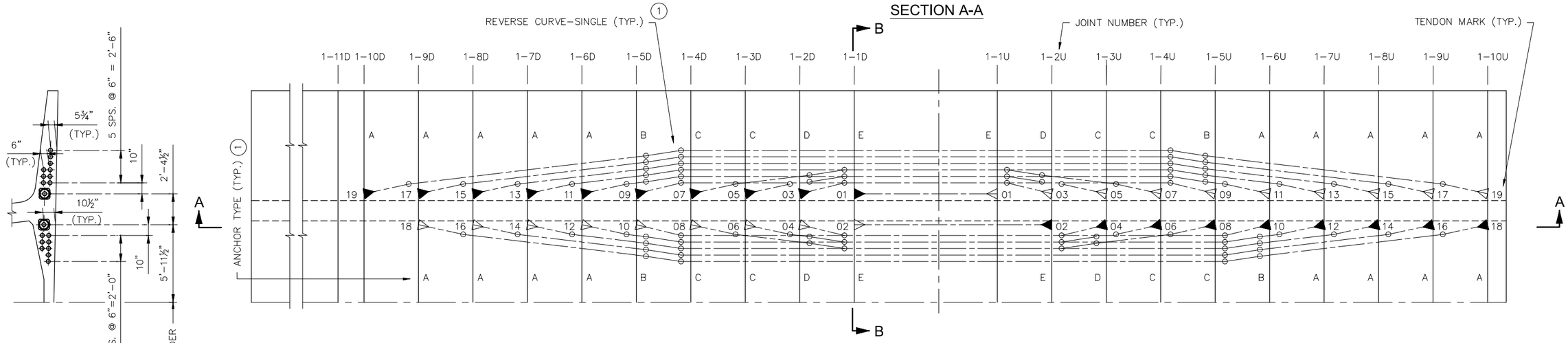

PARTIAL PLAN VIEW - TOP SLAB

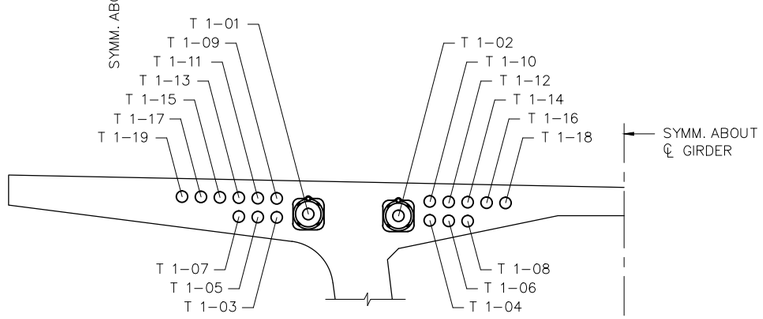

SECTION B-B

LEGEND:

PIER NUMBER — TENDON MARK
TOP SLAB CANTILEVER TENDON
T 1-15

NOTES:

◀ DENOTES STRESSING END OF TENDON.

◁ DENOTES NON-STRESSING END OF TENDON.

TENDONS ARE SYMMETRICAL ABOUT ℄ GIRDER.

FOR TENDON STRESSING FORCES SEE "LONGITUDINAL P.T. QUANTITIES AND STRESSING SCHEDULE" SHEET.

ALL ANCHORAGE AND DUCT HARDWARE FOR TOP SLAB CANTILEVER TENDONS SHALL ACCOMMODATE 12 X 0.6" DIA. STRAND TENDONS, WITH A MINIMUM BENDING RADIUS OF 30'-0".

FOR POST-TENSIONING ANCHORAGE PROTECTION, SEE "P.T. GROUTING & ANCHORAGE PROTECTION DETAILS" SHEETS.

(1) FOR DETAILS OF ANCHORAGE TYPES AND DEVIATION CURVES, SEE "CANTILEVER POST-TENSIONING DETAILS" SHEET.

NO.	DATE	BY	CHECK	DESIGN	REVISION / SUBMITTAL

DESIGNED BY: ETN | CHECKED BY: NMP
DRAWN BY: JWH | CHECKED BY: JWJ

AECOM

90% SUBMISSION - 01/22/16

METROPOLITAN COUNCIL

SOUTHWEST Green Line LRT Extension

CIVIL - VOLUME 4D
EXCELSIOR BLVD
BRIDGE 27C10
CANTILEVER POST-TENSIONING LAYOUT 1

DISCIPLINE: STRUCTURE

SHEET NAME: CBR27C10-BRG-SUP-054

SHEET 110 OF 174

Jan, 15 2016 12:40 pm V:\3400_ADC\CAD\SEGMENT E1\PLAN SHEETS\STRUCTURES\CBR27C10\CBR27C10-BRG-SUP-054.dwg By: hodgesj

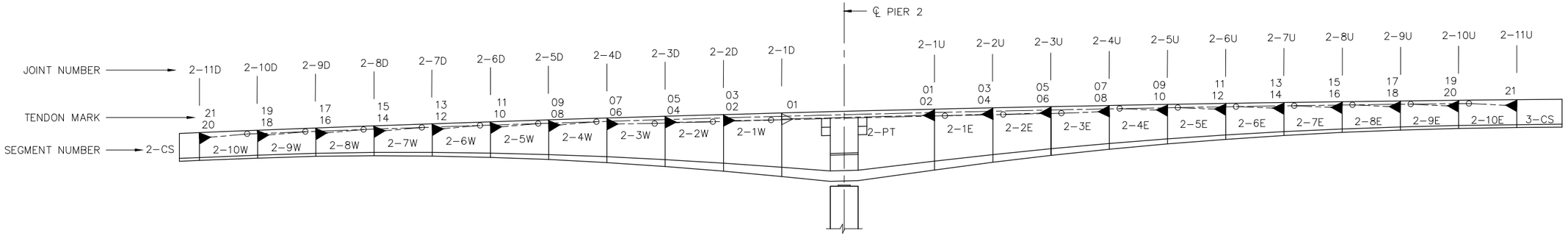

SECTION A-A

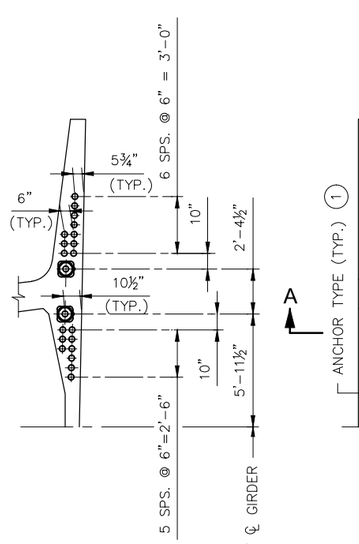

PARTIAL PLAN VIEW - TOP SLAB

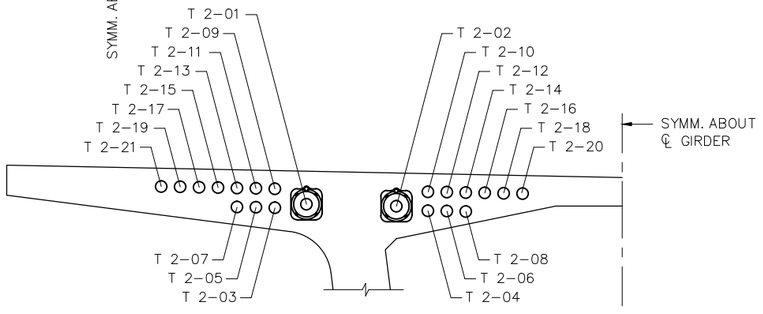

SECTION B-B

LEGEND:

PIER NUMBER — TENDON MARK
TOP SLAB CANTILEVER TENDON
T 2-15

NOTES:

◀ DENOTES STRESSING END OF TENDON.

◁ DENOTES NON-STRESSING END OF TENDON.

TENDONS ARE SYMMETRICAL ABOUT ℄ GIRDER.

FOR TENDON STRESSING FORCES SEE "LONGITUDINAL P.T. QUANTITIES AND STRESSING SCHEDULE" SHEET.

ALL ANCHORAGE AND DUCT HARDWARE FOR TOP SLAB CANTILEVER TENDONS SHALL ACCOMMODATE 12 X 0.6" DIA. STRAND TENDONS, WITH A MINIMUM BENDING RADIUS OF 30'-0".

FOR POST-TENSIONING ANCHORAGE PROTECTION, SEE "P.T. GROUTING & ANCHORAGE PROTECTION DETAILS" SHEETS.

(1) FOR DETAILS OF ANCHORAGE TYPES AND DEVIATION CURVES, SEE "CANTILEVER POST-TENSIONING DETAILS" SHEET.

NO.	DATE	BY	CHECK	DESIGN	REVISION / SUBMITTAL

DESIGNED BY: ETN | CHECKED BY: NMP
DRAWN BY: JWH | CHECKED BY: JWJ

AECOM

90% SUBMISSION - 01/22/16

METROPOLITAN COUNCIL

SOUTHWEST Green Line LRT Extension

CIVIL - VOLUME 4D
EXCELSIOR BLVD
BRIDGE 27C10
CANTILEVER POST-TENSIONING LAYOUT 2

DISCIPLINE: STRUCTURE
SHEET NAME: CBR27C10-BRG-SUP-055

SHEET 111 OF 174

Jan, 15 2016 12:40 pm V:\3400_ADC\CAD\SEGMENT E1\PLAN SHEETS\STRUCTURES\CBR27C10\CBR27C10-BRG-SUP-054.dwg By: hodgesj

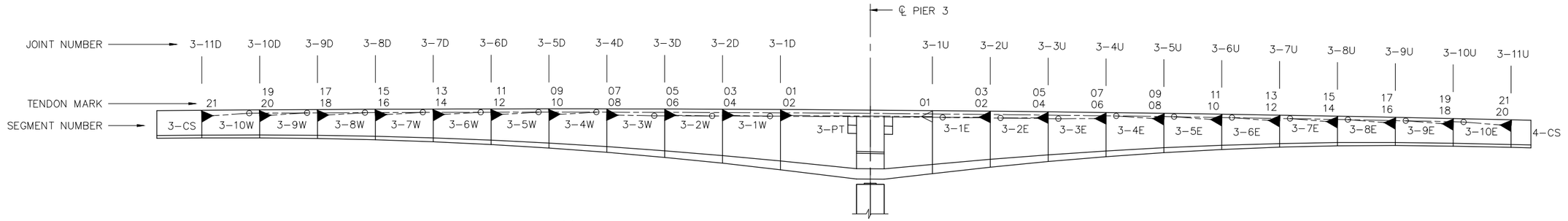

SECTION A-A

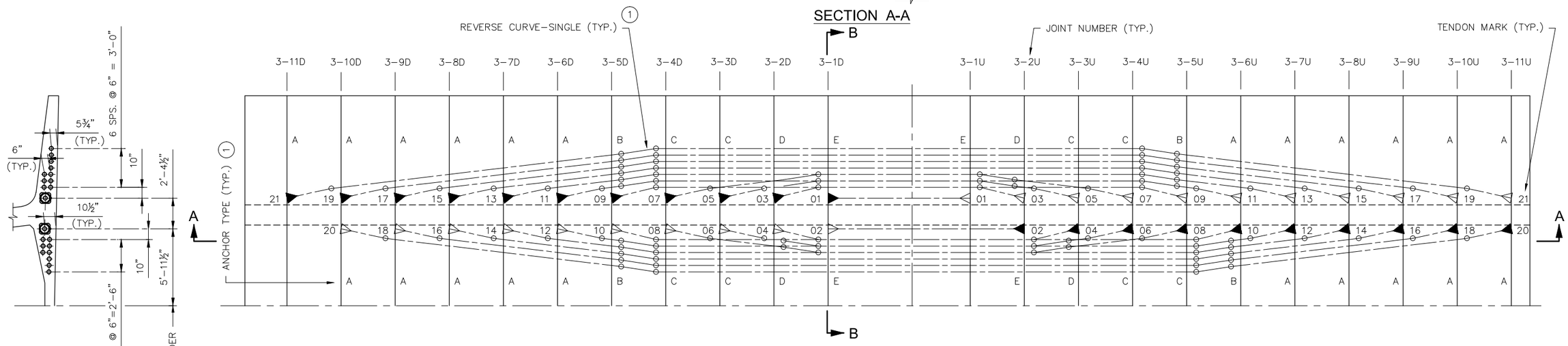

PARTIAL PLAN VIEW - TOP SLAB

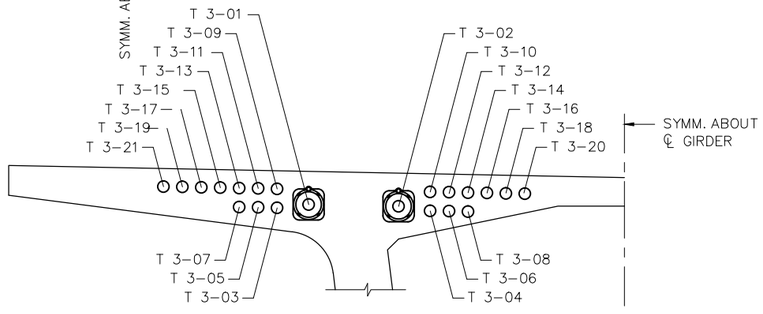

SECTION B-B

LEGEND:

PIER NUMBER — TENDON MARK
TOP SLAB CANTILEVER TENDON
T 3-15

NOTES:

◀ DENOTES STRESSING END OF TENDON.

◁ DENOTES NON-STRESSING END OF TENDON.

TENDONS ARE SYMMETRICAL ABOUT ℄ GIRDER.

FOR TENDON STRESSING FORCES SEE "LONGITUDINAL P.T. QUANTITIES AND STRESSING SCHEDULE" SHEET.

ALL ANCHORAGE AND DUCT HARDWARE FOR TOP SLAB CANTILEVER TENDONS SHALL ACCOMMODATE 12 X 0.6" DIA. STRAND TENDONS, WITH A MINIMUM BENDING RADIUS OF 30'-0".

FOR POST-TENSIONING ANCHORAGE PROTECTION, SEE "P.T. GROUTING & ANCHORAGE PROTECTION DETAILS" SHEETS.

(1) FOR DETAILS OF ANCHORAGE TYPES AND DEVIATION CURVES, SEE "CANTILEVER POST-TENSIONING DETAILS" SHEET.

NO.	DATE	BY	CHECK	DESIGN	REVISION / SUBMITTAL

DESIGNED BY: ETN CHECKED BY: NMP
DRAWN BY: JWH CHECKED BY: JWJ

AECOM

90% SUBMISSION - 01/22/16

METROPOLITAN COUNCIL

SOUTHWEST Green Line LRT Extension

CIVIL - VOLUME 4D
EXCELSIOR BLVD
BRIDGE 27C10
CANTILEVER POST-TENSIONING LAYOUT 3

DISCIPLINE: STRUCTURE

SHEET NAME: CBR27C10-BRG-SUP-056

SHEET 112 OF 174

Jan, 15 2016 12:40 pm V:\3400_ADC\CAD\SEGMENT E1\PLAN SHEETS\STRUCTURES\CBR27C10\CBR27C10-BRG-SUP-054.dwg By: hodgesj

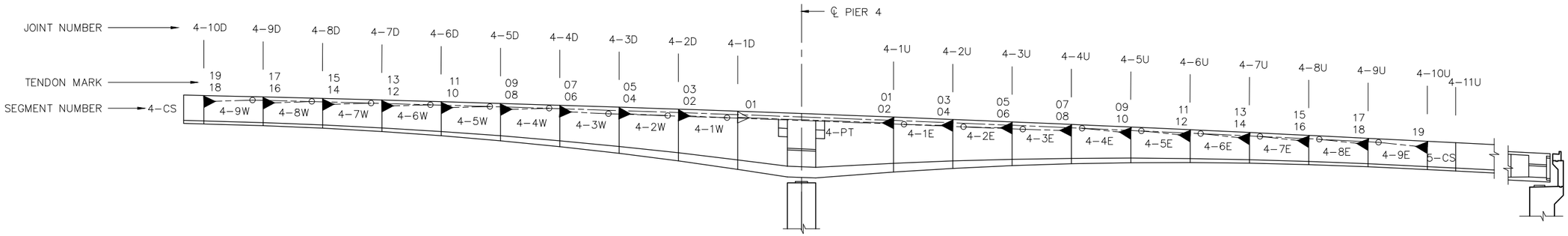

SECTION A-A

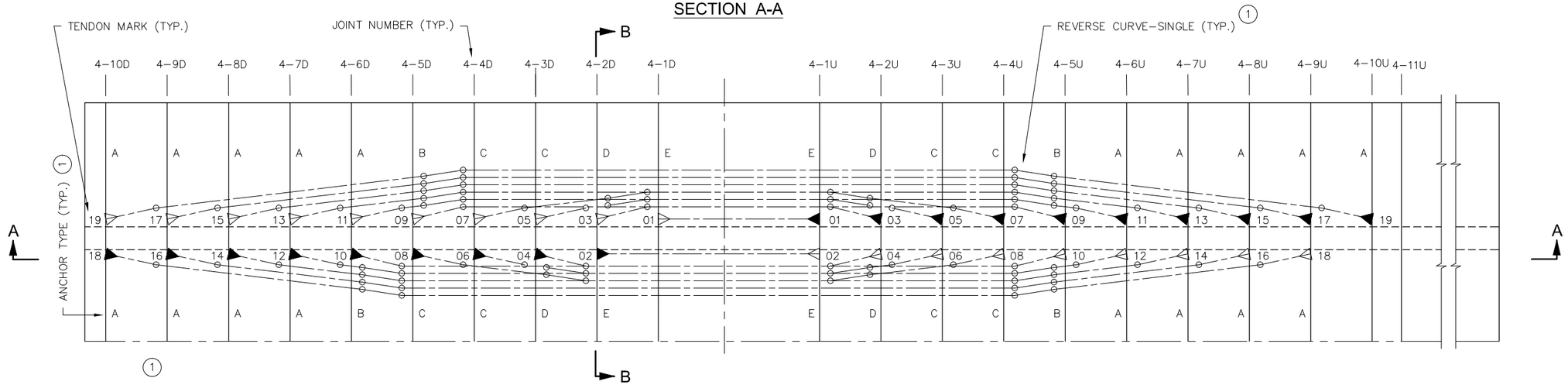

PARTIAL PLAN VIEW - TOP SLAB

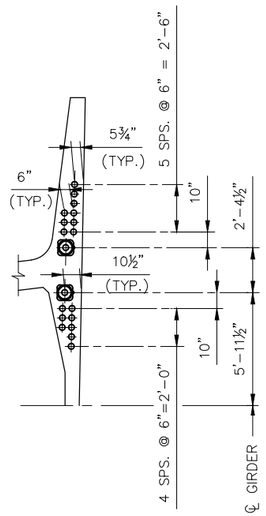

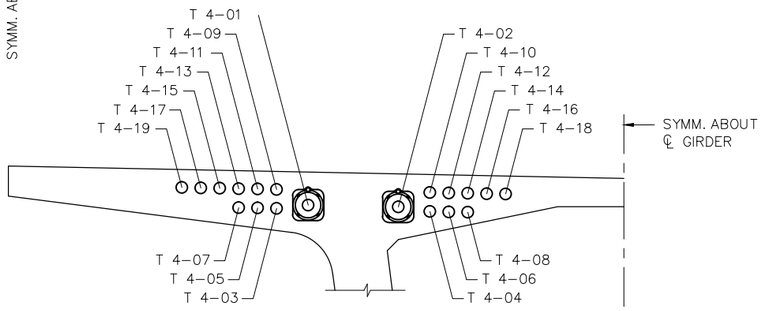

SECTION B-B

LEGEND:

PIER NUMBER
TOP SLAB CANTILEVER TENDON
TENDON MARK
T 4-15

NOTES:

◀ DENOTES STRESSING END OF TENDON.

◁ DENOTES NON-STRESSING END OF TENDON.

TENDONS ARE SYMMETRICAL ABOUT ℄ GIRDER.

FOR TENDON STRESSING FORCES SEE "LONGITUDINAL P.T. QUANTITIES AND STRESSING SCHEDULE" SHEET.

ALL ANCHORAGE AND DUCT HARDWARE FOR TOP SLAB CANTILEVER TENDONS SHALL ACCOMMODATE 12 X 0.6" DIA. STRAND TENDONS, WITH A MINIMUM BENDING RADIUS OF 30'-0".

FOR POST-TENSIONING ANCHORAGE PROTECTION, SEE "P.T. GROUTING & ANCHORAGE PROTECTION DETAILS" SHEETS.

(1) FOR DETAILS OF ANCHORAGE TYPES AND DEVIATION CURVES, SEE "CANTILEVER POST-TENSIONING DETAILS" SHEET.

NO.	DATE	BY	CHECK	DESIGN	REVISION / SUBMITTAL

DESIGNED BY: ETN | CHECKED BY: NMP
DRAWN BY: JWH | CHECKED BY: JWJ

AECOM

90% SUBMISSION - 01/22/16

METROPOLITAN COUNCIL

SOUTHWEST Green Line LRT Extension

CIVIL - VOLUME 4D
EXCELSIOR BLVD
BRIDGE 27C10
CANTILEVER POST-TENSIONING LAYOUT 4

DISCIPLINE: STRUCTURE
SHEET NAME: CBR27C10-BRG-SUP-057

SHEET 113 OF 174

Jan, 15 2016 12:40 pm V:\3400_ADC\CAD\SEGMENT E1\PLAN SHEETS\STRUCTURES\CBR27C10\CBR27C10-BRG-SUP-054.dwg By: hodgesj

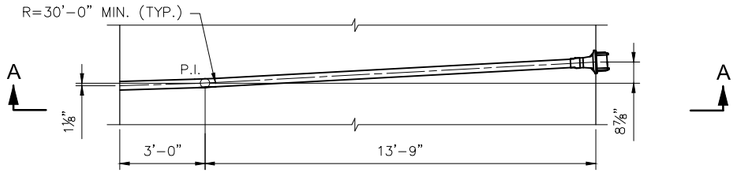

PARTIAL PLAN - TYPE A ANCHORAGE

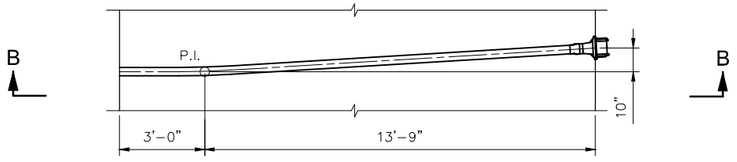

PARTIAL PLAN - TYPE D ANCHORAGE

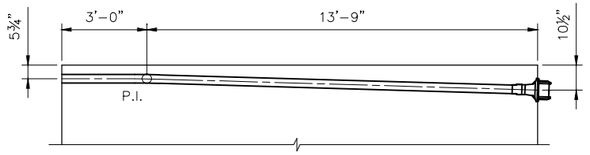

SECTION A-A

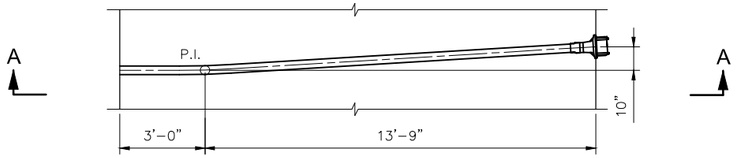

PARTIAL PLAN - TYPE B ANCHORAGE

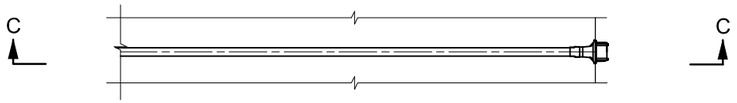

PARTIAL PLAN - TYPE E ANCHORAGE

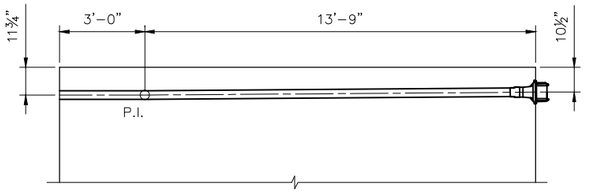

SECTION B-B

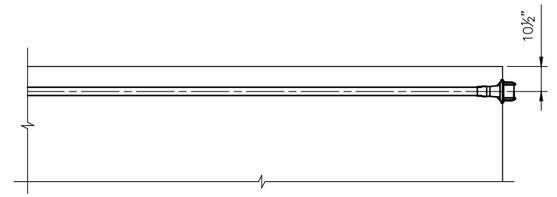

SECTION C-C

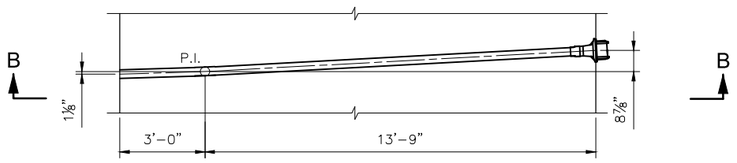

PARTIAL PLAN - TYPE C ANCHORAGE

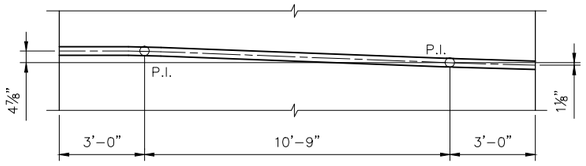

PARTIAL PLAN - REVERSE CURVE - SINGLE

NOTES:

ALL ANCHORAGE AND DUCT HARDWARE FOR TOP SLAB CANTILEVER TENDONS SHALL ACCOMMODATE 12 X 0.6" DIA. STRAND TENDONS, WITH A MINIMUM BENDING RADIUS OF 30'-0".

FOR THE LOCATION OF ANCHORAGE TYPES AND DEVIATION CURVES, SEE "CANTILEVER POST-TENSIONING LAYOUT" SHEETS.

FOR POST-TENSIONING ANCHORAGE PROTECTION, SEE "P.T. GROUTING & ANCHORAGE PROTECTION DETAILS" SHEETS.

NO.	DATE	BY	CHECK	DESIGN	REVISION / SUBMITTAL

DESIGNED BY: ETN | CHECKED BY: NMP
DRAWN BY: JWH | CHECKED BY: JWJ

AECOM

90% SUBMISSION - 01/22/16

METROPOLITAN COUNCIL

SOUTHWEST Green Line LRT Extension

CIVIL - VOLUME 4D
EXCELSIOR BLVD
BRIDGE 27C10
CANTILEVER POST-TENSIONING DETAILS

DISCIPLINE: STRUCTURE

SHEET NAME: CBR27C10-BRG-SUP-058

SHEET 114 OF 174

Jan, 15 2016 12:43 pm v:\3400_ADC\CAD\SEGMENT E1\PLAN SHEETS\STRUCTURES\CBR27C10\CBR27C10-BRG-SUP-058.dwg By: hodgesj

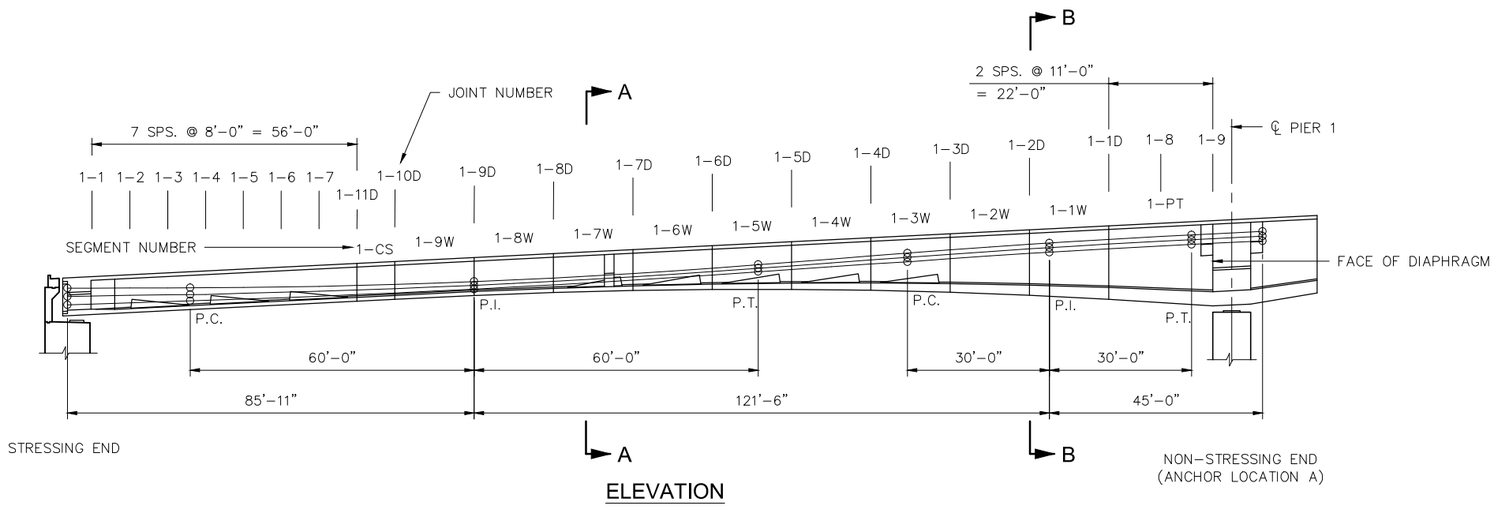

ELEVATION

	ANCHOR	1-1	1-2	1-3	1-4	1-5	1-6	1-7	1-11D	1-10D	MID. SEGM.	1-9D	MID. SEGM.	1-8D	MID. SEGM.	1-7D	MID. SEGM.	1-6D	MID. SEGM.	1-5D	MID. SEGM.	1-4D	MID. SEGM.	1-3D	MID. SEGM.	1-2D
W 1-01	5'-10"	5'-7⅛"	5'-2⅝"	4'-10⅛"	4'-5⅝"	4'-1½"	3'-10"	3'-6⅞"	3'-4¼"	3'-2⅛"	3'-0½"	2'-11½"	3'-0⅛"	3'-1⅛"	3'-3⅞"	3'-7³⁄₁₆"	4'-0⁵⁄₁₆"	4'-5⅞"	5'-1¼"	5'-8⅞"	6'-6"	7'-3⅛"	8'-1⁵⁄₁₆"	8'-11⅜"	9'-10⁷⁄₁₆"	10'-9⅛"
W 1-02	4'-1"	3'-11"	3'-7⅞"	3'-4¾"	3'-1¹¹⁄₁₆"	2'-10⅞"	2'-8⅞"	2'-6⅜"	2'-4¹¹⁄₁₆"	2'-3⁵⁄₁₆"	2'-2½"	2'-2"	2'-3"	2'-4⅜"	2'-7⅜"	2'-10¾"	3'-3¹³⁄₁₆"	3'-9¼"	4'-4¼"	4'-11½"	5'-8¼"	6'-4⅞"	7'-2¾"	8'-0⅜"	8'-11⅛"	9'-9½"
W 1-03	2'-4"	2'-2⅞"	2'-1⅛"	1'-11⅜"	1'-9¹⁵⁄₁₆"	1'-8⅛"	1'-6⅞"	1'-5⅞"	1'-5¹¹⁄₁₆"	1'-4½"	1'-4½"	1'-4½"	1'-5⅞"	1'-7⅝"	1'-10⅞"	2'-2⁵⁄₁₆"	2'-7⁵⁄₁₆"	3'-0½"	3'-7¼"	4'-2⅛"	4'-10⁷⁄₁₆"	5'-6¹⁄₁₆"	6'-4⅛"	7'-1⁷⁄₁₆"	7'-11⅞"	8'-10"

	MID. SEGM.	1-1D	1-8	1-9	ANCHOR
W 1-01	11'-8⅝"	12'-7¾"	13'-11⁷⁄₁₆"	15'-2½"	14'-11⅛"
W 1-02	10'-8⅞"	11'-7⅞"	12'-11⁷⁄₁₆"	14'-2½"	13'-11⅛"
W 1-03	9'-9³⁄₁₆"	10'-8"	11'-11½"	13'-2½"	12'-11⅛"

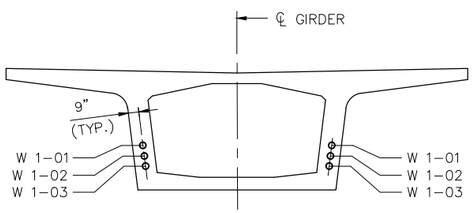

SECTION A-A

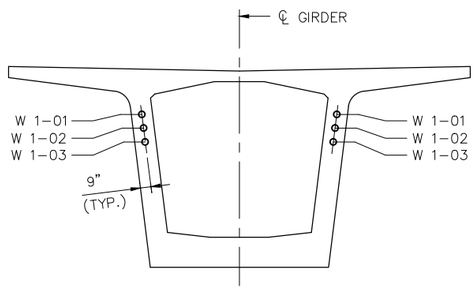

SECTION B-B

LEGEND:

SPAN NUMBER
WEB CONTINUITY TENDON
TENDON MARK
W 1-03

NOTES:

DIMENSIONS IN TABLE ARE VERTICAL DISTANCES FROM BOTTOM OF GIRDER TO ℄ OF TENDON DUCTS AT SECTION JOINTS, MID-POINTS BETWEEN SECTIONS AND DIMENSIONED LOCATIONS.

ALL ANCHORAGE AND DUCT HARDWARE FOR WEB CONTINUITY TENDONS SHALL ACCOMMODATE 27 X 0.6" DIA. STRAND TENDONS.

FOR DETAILS OF ANCHORAGES AT END DIAPHRAGM, SEE "END DIAPHRAGM P.T. DETAILS" SHEETS.

FOR DETAILS OF ANCHORAGES AT PIER TABLE, SEE "PIER TABLE POST-TENSIONING DETAILS" SHEETS.

FOR TENDON STRESSING FORCES, SEE "LONGITUDINAL P.T. QUANTITIES AND STRESSING SCHEDULE" SHEET.

FOR POST-TENSIONING ANCHORAGE PROTECTION, SEE "P.T. GROUTING & ANCHORAGE PROTECTION DETAILS" SHEETS.

FOR FUTURE POST-TENSIONING LAYOUT, SEE "FUTURE POST-TENSIOINING LAYOUT" SHEETS.

NO.	DATE	BY	CHECK	DESIGN	REVISION / SUBMITTAL

DESIGNED BY: ETN | CHECKED BY: NMP
DRAWN BY: JWH | CHECKED BY: JWJ

AECOM

90% SUBMISSION - 01/22/16

METROPOLITAN COUNCIL

SOUTHWEST Green Line LRT Extension

CIVIL - VOLUME 4D
EXCELSIOR BLVD
BRIDGE 27C10
CONTINUITY WEB P.T. LAYOUT 1

DISCIPLINE: STRUCTURE

SHEET NAME: CBR27C10-BRG-SUP-059

SHEET 115 OF 174

Jan, 15 2016 12:46 pm v:\3400_ADC\CAD\SEGMENT E1\PLAN SHEETS\STRUCTURES\CBR27C10\CBR27C10-BRG-SUP-059.dwg By: hodgesj

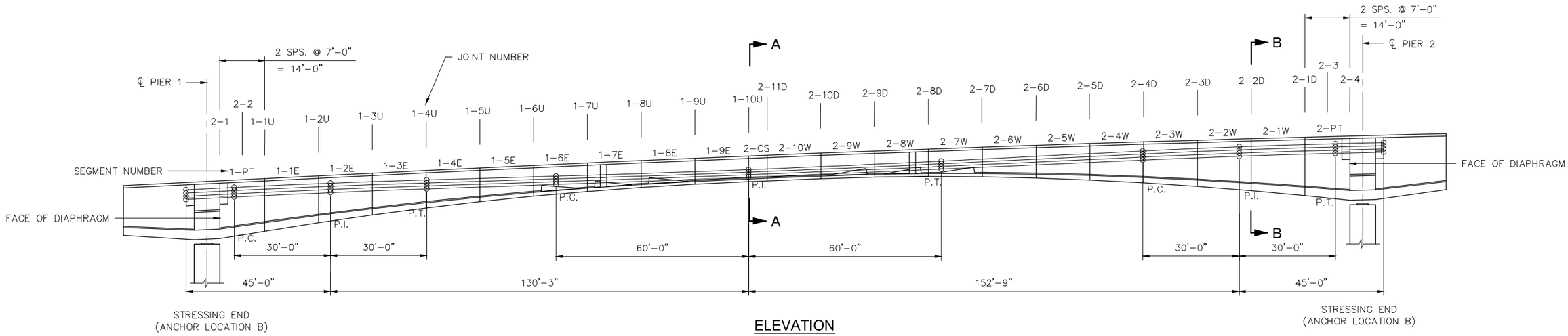

ELEVATION

	ANCHOR	2-1	2-2	1-1U	MID. SEGM.	1-2U	MID. SEGM.	1-3U	MID. SEGM.	1-4U	MID. SEGM.	1-5U	MID. SEGM.	1-6U	MID. SEGM.	1-7U	MID. SEGM.	1-8U	MID. SEGM.	1-9U	MID. SEGM.	1-10U	2-11D	MID. SEGM.	2-10D	MID. SEGM.
W 2-01	15'-5⅛"	15'-8½"	14'-10⅞"	14'-1⅛"	13'-1¾"	12'-2⅛"	11'-3⅝"	10'-4¹³⁄₁₆"	9'-7"	8'-8⅞"	8'-0¹⁄₁₆"	7'-3⁵⁄₁₆"	6'-7⅞"	6'-0⅝"	5'-6⅝"	5'-0¹³⁄₁₆"	4'-8⅜"	4'-4⅛"	4'-1½"	3'-11"	3'-9⅞"	3'-9"	3'-9"	3'-9¹⁄₁₆"	3'-9⅜"	3'-10¾"
W 2-02	14'-5⅛"	14'-8½"	13'-10⅞"	13'-1⅛"	12'-11³⁄₁₆"	11'-2⅝"	10'-3⅞"	9'-5³⁄₁₆"	8'-7½"	7'-9¹³⁄₁₆"	7'-1"	6'-4⁷⁄₁₆"	5'-9¼"	5'-2³⁄₁₆"	4'-8⅜"	4'-2¾"	3'-10⅞"	3'-6⅜"	3'-3¹³⁄₁₆"	3'-1⅞"	3'-0⅜"	2'-11½"	2'-11½"	2'-11½"	2'-11³⁄₁₆"	3'-1⅛"
W 2-03	13'-5⅛"	13'-8½"	12'-10⅞"	12'-1⅛"	11'-1⅞"	10'-2⅞"	9'-4⅛"	8'-5½"	7'-8⅛"	6'-10⅜"	6'-1⅞"	5'-5⅝"	4'-10⅝"	4'-3¹⁄₁₆"	3'-10⅛"	3'-4⅝"	3'-0½"	2'-8⅝"	2'-6⅛"	2'-3⅞"	2'-2¹³⁄₁₆"	2'-2"	2'-2"	2'-2"	2'-2¼"	2'-3½"
W 2-04	12'-5⅛"	12'-8½"	11'-10⅞"	11'-1⅛"	10'-1⅞"	9'-2½"	8'-4⅜"	7'-5⅞"	6'-8⅝"	5'-11⅛"	5'-2⅞"	4'-6¾"	3'-11⅞"	3'-5¼"	2'-11⅞"	2'-6½"	2'-2⅝"	1'-10¹³⁄₁₆"	1'-8½"	1'-6¼"	1'-5⁵⁄₁₆"	1'-4½"	1'-4½"	1'-4½"	1'-4¹⁄₁₆"	1'-5⅞"

	2-9D	MID. SEGM.	2-8D	MID. SEGM.	2-7D	MID. SEGM.	2-6D	MID. SEGM.	2-5D	MID. SEGM.	2-4D	MID. SEGM.	2-3D	MID. SEGM.	2-2D	MID. SEGM.	2-1D	2-3	2-4	ANCHOR
W 2-01	4'-0⅜"	4'-3⅞"	4'-7⅝"	5'-1¼"	5'-6⅞"	6'-2⅛"	6'-9⁵⁄₁₆"	7'-6"	8'-2¹³⁄₁₆"	9'-1⅛"	9'-11⅜"	10'-10⅞"	11'-10¹⁄₁₆"	12'-10³⁄₁₆"	13'-10¹⁄₁₆"	14'-10¹³⁄₁₆"	15'-11¼"	16'-9⅞"	17'-8½"	17'-5"
W 2-02	3'-2¹¹⁄₁₆"	3'-6⅛"	3'-9¹¹⁄₁₆"	4'-3⅛"	4'-8½"	5'-3½"	5'-10⅝"	6'-7³⁄₁₆"	7'-3¹³⁄₁₆"	8'-1⅞"	9'-0"	9'-11⁵⁄₁₆"	10'-10⅜"	11'-10⅞"	12'-10³⁄₁₆"	13'-10⅞"	14'-11¼"	15'-9⅞"	16'-8½"	16'-5"
W 2-03	2'-4⅞"	2'-8¼"	2'-11⅛"	3'-4⅞"	3'-10³⁄₁₆"	4'-5"	4'-11⅞"	5'-8⅝"	6'-4¾"	7'-2⅛"	8'-0⅝"	8'-11¾"	9'-10⅛"	10'-10⅝"	11'-10⅝"	12'-10⅞"	13'-11⅝"	14'-9⅞"	15'-8½"	15'-5"
W 2-04	1'-7¼"	1'-10⅜"	2'-1⅛"	2'-6¾"	2'-11⅞"	3'-6½"	4'-1¼"	4'-9⁷⁄₁₆"	5'-5¾"	6'-3⅞"	7'-1¼"	8'-0¼"	8'-11"	9'-10¹³⁄₁₆"	10'-10⅞"	11'-11"	12'-11⅝"	13'-9⅞"	14'-8½"	14'-5"

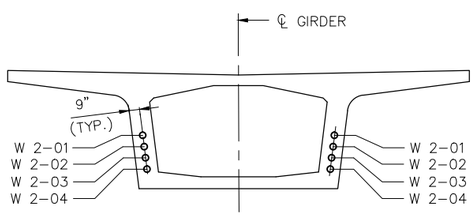

SECTION A-A

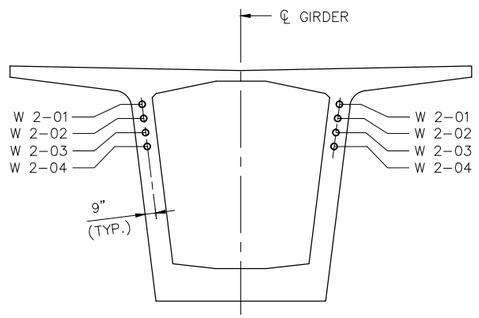

SECTION B-B

LEGEND:

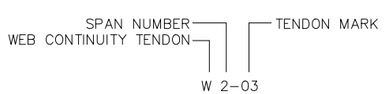

NOTES:

DIMENSIONS IN TABLE ARE VERTICAL DISTANCES FROM BOTTOM OF GIRDER TO ℄ OF TENDON DUCTS AT SECTION JOINTS, MID-POINTS BETWEEN SECTIONS AND DIMENSIONED LOCATIONS.

ALL ANCHORAGE AND DUCT HARDWARE FOR WEB CONTINUITY TENDONS SHALL ACCOMMODATE 27 X 0.6" DIA. STRAND TENDONS.

FOR DETAILS OF ANCHORAGES AT PIER TABLES, SEE "PIER TABLE POST-TENSIONING DETAILS" SHEETS.

FOR TENDON STRESSING FORCES, SEE "LONGITUDINAL P.T. QUANTITIES AND STRESSING SCHEDULE" SHEET.

FOR POST-TENSIONING ANCHORAGE PROTECTION, SEE "P.T. GROUTING & ANCHORAGE PROTECTION DETAILS" SHEETS.

FOR FUTURE POST-TENSIONING LAYOUT, SEE "FUTURE POST-TENSIOINING LAYOUT" SHEETS.

NO.	DATE	BY	CHECK	DESIGN	REVISION / SUBMITTAL

DESIGNED BY: ETN | CHECKED BY: NMP
DRAWN BY: JWH | CHECKED BY: JWJ

AECOM

90% SUBMISSION - 01/22/16

METROPOLITAN COUNCIL

SOUTHWEST Green Line LRT Extension

CIVIL - VOLUME 4D
EXCELSIOR BLVD
BRIDGE 27C10
CONTINUITY WEB P.T. LAYOUT 2

DISCIPLINE: STRUCTURE

SHEET NAME: CBR27C10-BRG-SUP-060

SHEET 116 OF 174

Jan, 15 2016 12:47 pm V:\3400_ADC\CAD\SEGMENT E1\PLAN SHEETS\STRUCTURES\CBR27C10\CBR27C10-BRG-SUP-059.dwg By: hodgesj

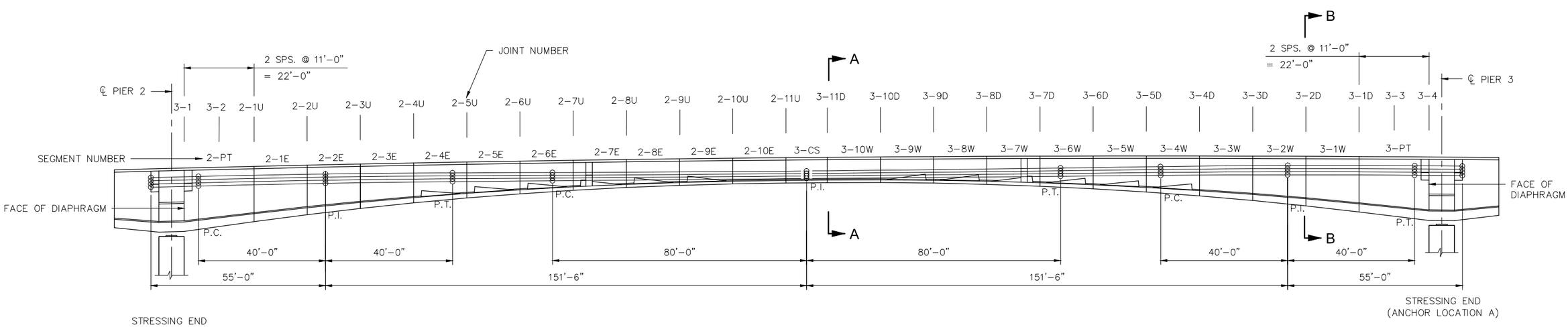

ELEVATION

	ANCHOR	3-1	3-2	2-1U	MID. SEGM.	2-2U	MID. SEGM.	2-3U	MID. SEGM.	2-4U	MID. SEGM.	2-5U	MID. SEGM.	2-6U	MID. SEGM.	2-7U	MID. SEGM.	2-8U	MID. SEGM.	2-9U	MID. SEGM.	2-10U	MID. SEGM.	2-11U	MID. SEGM.	3-11D
W 3-01	16'-10¾"	17'-2½"	15'-11¼"	14'-7¾"	13'-8 7/16"	12'-8⅞"	11'-10½"	10'-11⅞"	10'-2⅜"	9'-4⅝"	8'-7⅞"	7'-11⅛"	7'-3½"	6'-8 1/16"	6'-1¾"	5'-7½"	5'-2½"	4'-9¾"	4'-6¼"	4'-2 13/16"	4'-0⅝"	3'-10⅝"	3'-9¾"	3'-9 1/16"	3'-9"	3'-9 1/16"
W 3-02	15'-10¾"	16'-2½"	14'-11¼"	13'-7 13/16"	12'-8½"	11'-9 1/16"	10'-10¾"	10'-0¼"	9'-2⅞"	8'-5¼"	7'-8¾"	7'-0⅛"	6'-4¾"	5'-9 7/16"	5'-3 5/16"	4'-9¼"	4'-4½"	3'-11 13/16"	3'-8⅜"	3'-5 1/16"	3'-3"	3'-1 1/16"	3'-0¼"	2'-11½"	2'-11½"	2'-11½"
W 3-03	14'-10¾"	15'-2½"	13'-11¼"	12'-7⅞"	11'-8⅝"	10'-9¼"	9'-11"	9'-0 5/8"	8'-3 5/16"	7'-5⅞"	6'-9½"	6'-1⅜"	5'-5⅞"	4'-10 13/16"	4'-4⅞"	3'-11"	3'-6⅜"	3'-1⅞"	2'-10½"	2'-7⅜"	2'-5⅜"	2'-3 1/16"	2'-2 1/16"	2'-2"	2'-2"	2'-2 1/16"
W 3-04	13'-10¾"	14'-2½"	12'-11¼"	11'-7⅞"	10'-8 1/16"	9'-9⅜"	8'-11¼"	8'-1"	7'-3 13/16"	6'-6½"	5'-10⅜"	5'-2⅛"	4'-7 1/16"	4'-0⅛"	3'-6⅜"	3'-0 1/16"	2'-8¼"	2'-3⅜"	2'-0 1/16"	1'-9½"	1'-7 1/16"	1'-5 3/16"	1'-5⅛"	1'-4½"	1'-4½"	1'-4½"

	MID. SEGM.	3-10D	MID. SEGM.	3-9D	MID. SEGM.	3-8D	MID. SEGM.	3-7D	MID. SEGM.	3-6D	MID. SEGM.	3-5D	MID. SEGM.	3-4D	MID. SEGM.	3-3D	MID. SEGM.	3-2D	MID. SEGM.	3-1D	3-3	3-4	ANCHOR
W 3-01	3'-9¾"	3'-10⅝"	4'-0⅝"	4'-2 13/16"	4'-6¼"	4'-9¾"	5'-2½"	5'-7½"	6'-1¾"	6'-8 1/16"	7'-3½"	7'-11⅛"	8'-7⅞"	9'-4⅝"	10'-2⅜"	10'-11⅞"	11'-10½"	12'-8⅞"	13'-8 1/16"	14'-7¾"	15'-11¼"	17'-2½"	16'-10¾"
W 3-02	3'-0¼"	3'-1 1/16"	3'-3"	3'-5 1/16"	3'-8⅜"	3'-11 13/16"	4'-4½"	4'-9¼"	5'-3 5/16"	5'-9 7/16"	6'-4¾"	7'-0⅛"	7'-8¾"	8'-5 5/16"	9'-2⅞"	10'-0¼"	10'-10¾"	11'-9 1/16"	12'-8½"	13'-7 13/16"	14'-11¼"	16'-2½"	15'-10¾"
W 3-03	2'-2 11/16"	2'-3½"	2'-5⅜"	2'-7⅜"	2'-10½"	3'-1 7/8"	3'-6⅜"	3'-11"	4'-4 7/8"	4'-10 13/16"	5'-5 7/8"	6'-1⅛"	6'-9½"	7'-5 7/8"	8'-3⅜"	9'-0 5/8"	9'-11"	10'-9¼"	11'-8⅝"	12'-7⅞"	13'-11¼"	15'-2½"	14'-10¾"
W 3-04	1'-5⅛"	1'-5 13/16"	1'-7 1/16"	1'-9½"	2'-0 1/16"	2'-3⅞"	2'-8¼"	3'-0 1/16"	3'-6⅜"	4'-0⅛"	4'-7 1/16"	5'-2⅛"	5'-10⅜"	6'-6½"	7'-3 13/16"	8'-1"	8'-11¼"	9'-9⅜"	10'-8 1/16"	11'-7⅞"	12'-11¼"	14'-2½"	13'-10¾"

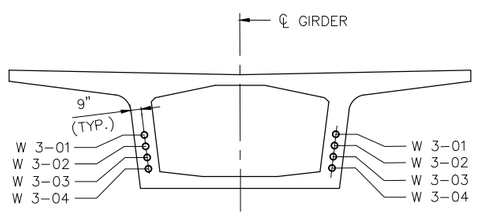

SECTION A-A

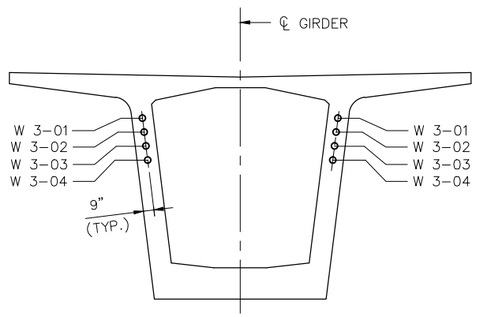

SECTION B-B

LEGEND:

SPAN NUMBER — TENDON MARK
WEB CONTINUITY TENDON
W 3-03

NOTES:

DIMENSIONS IN TABLE ARE VERTICAL DISTANCES FROM BOTTOM OF GIRDER TO ℄ OF TENDON DUCTS AT SECTION JOINTS, MID-POINTS BETWEEN SECTIONS AND DIMENSIONED LOCATIONS.

ALL ANCHORAGE AND DUCT HARDWARE FOR WEB CONTINUITY TENDONS SHALL ACCOMMODATE 27 X 0.6" DIA. STRAND TENDONS.

FOR DETAILS OF ANCHORAGES AT PIER TABLES, SEE "PIER TABLE POST-TENSIONING DETAILS" SHEETS.

FOR TENDON STRESSING FORCES, SEE "LONGITUDINAL P.T. QUANTITIES AND STRESSING SCHEDULE" SHEET.

FOR POST-TENSIONING ANCHORAGE PROTECTION, SEE "P.T. GROUTING & ANCHORAGE PROTECTION DETAILS" SHEETS.

FOR FUTURE POST-TENSIONING LAYOUT, SEE "FUTURE POST-TENSIOINING LAYOUT" SHEETS.

NO.	DATE	BY	CHECK	DESIGN	REVISION / SUBMITTAL

DESIGNED BY: ETN | CHECKED BY: NMP
DRAWN BY: JWH | CHECKED BY: JWJ

AECOM

90% SUBMISSION - 01/22/16

METROPOLITAN COUNCIL

SOUTHWEST Green Line LRT Extension

CIVIL - VOLUME 4D
EXCELSIOR BLVD
BRIDGE 27C10
CONTINUITY WEB P.T. LAYOUT 3

DISCIPLINE: STRUCTURE

SHEET NAME: CBR27C10-BRG-SUP-061

SHEET 117 OF 174

Jan, 15 2016 12:47 pm V:\3400_ADC\CAD\SEGMENT E1\PLAN SHEETS\STRUCTURES\CBR27C10\CBR27C10-BRG-SUP-059.dwg By: hodgesj

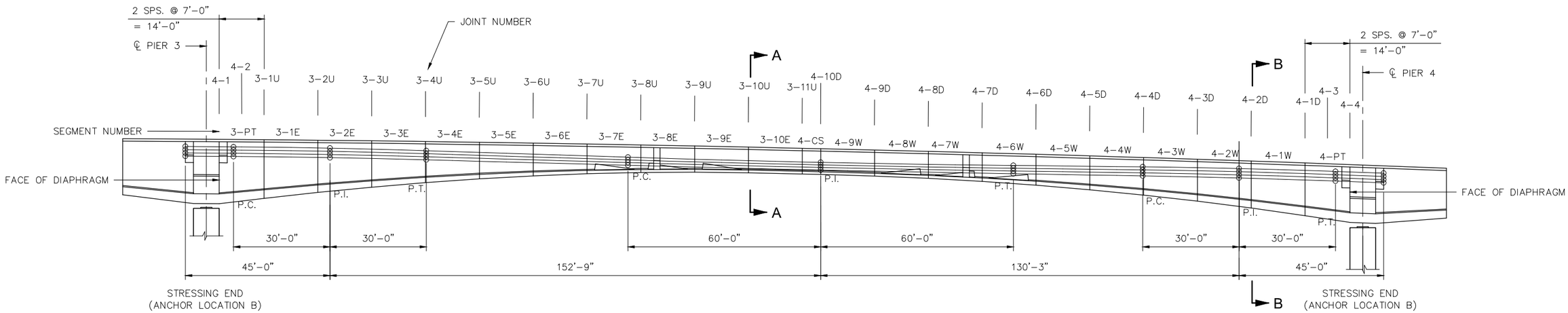

ELEVATION

	ANCHOR	4–1	4–2	3–1U	MID. SEGM.	3–2U	MID. SEGM.	3–3U	MID. SEGM.	3–4U	MID. SEGM.	3–5U	MID. SEGM.	3–6U	MID. SEGM.	3–7U	MID. SEGM.	3–8U	MID. SEGM.	3–9U	MID. SEGM.	3–10U	MID. SEGM.	3–11U	4–10D	MID. SEGM.
W 4–01	17'–5"	17'–8 7/16"	16'–9 7/8"	15'–11 1/4"	14'–10 13/16"	13'–10 1/16"	12'–10 3/16"	11'–10 1/16"	10'–10 7/8"	9'–11 3/8"	9'–1 1/16"	8'–2 13/16"	7'–6"	6'–9 1/4"	6'–2"	5'–6 7/8'	5'–1 3/16"	4'–7 5/8"	4'–3 7/8"	4'–0 5/16"	3'–10 1/16"	3'–9 5/16"	3'–9"	3'–9"	3'–9"	3'–9 7/8"
W 4–02	16'–5"	16'–8 7/16"	15'–9 7/8"	14'–11 1/4"	13'–10 7/8"	12'–10 3/16"	11'–10 3/8"	10'–10 3/8"	9'–11 5/16"	9'–0"	8'–1 7/8"	7'–3 3/4"	6'–7 7/8"	5'–10 1/2"	5'–3 1/2"	4'–8 1/2"	4'–3"	3'–9 5/8"	3'–6"	3'–2 5/8"	3'–1 1/16"	2'–11 3/4"	2'–11 1/2"	2'–11 1/2"	2'–11 1/2"	3'–0 3/8"
W 4–03	15'–5"	15'–8 7/16"	14'–9 7/8"	13'–11 5/16"	12'–10 7/8"	11'–10 5/16"	10'–10 5/8"	9'–10 1/16"	8'–11 3/4"	8'–0 5/8"	7'–2 5/8"	6'–4 3/4"	5'–8 5/16"	4'–11 7/8"	4'–5"	3'–10 3/16"	3'–4 7/8"	2'–11 5/8"	2'–8 3/16"	2'–4 7/8"	2'–3 1/16"	2'–2 3/16"	2'–2"	2'–2"	2'–2"	2'–2 7/8"
W 4–04	14'–5"	14'–8 7/16"	13'–9 7/8"	12'–11 5/16"	11'–11"	10'–10 7/16"	9'–10 13/16"	8'–11"	8'–0 1/4"	7'–1 1/4"	6'–3 7/16"	5'–5 1/16"	4'–9 7/16"	4'–1 3/16"	3'–6 1/2"	2'–11 7/8"	2'–6 1/16"	2'–1 5/8"	1'–10 5/16"	1'–7 3/16"	1'–5 7/8"	1'–4 5/8"	1'–4 1/2"	1'–4 1/2"	1'–4 1/2"	1'–5 5/16"

	4–9D	MID. SEGM.	4–8D	MID. SEGM.	4–7D	MID. SEGM.	4–6D	MID. SEGM.	4–5D	MID. SEGM.	4–4D	MID. SEGM.	4–3D	MID. SEGM.	4–2D	MID. SEGM.	4–1D	4–3	4–4	ANCHOR
W 4–01	3'–11 1/16"	4'–1 1/2"	4'–4 1/4"	4'–8 7/16"	5'–0 7/8"	5'–6 13/16"	6'–0 13/16"	6'–8 3/16"	7'–3 5/8"	8'–0 3/8"	8'–9 1/4"	9'–7 5/16"	10'–5 1/8"	11'–3 7/8"	12'–2 5/16"	13'–1 7/8"	14'–1 1/8"	14'–10 7/8"	15'–8 1/2"	15'–5 1/8"
W 4–02	3'–11 7/16"	3'–3 7/8"	3'–6 7/16"	3'–10 1/2"	4'–2 7/8"	4'–8 1/2"	5'–2 3/8"	5'–9 1/2"	6'–4 3/4"	7'–1 5/16"	7'–10"	8'–7 7/8"	9'–5 1/2"	10'–4 1/8"	11'–2 1/2"	12'–1 7/8"	13'–1 1/8"	13'–10 7/8"	14'–8 1/2"	14'–5 1/8"
W 4–03	2'–3 7/8"	2'–6 3/16"	2'–8 11/16"	3'–0 11/16"	3'–4 13/16"	3'–10 5/16"	4'–3 7/8"	4'–10 7/8"	5'–5 7/8"	6'–2 1/4"	6'–10 3/4"	7'–8 7/16"	8'–5 7/8"	9'–4 3/8"	10'–2 5/8"	11'–2"	12'–1 3/16"	12'–10 7/8"	13'–8 1/2"	13'–5 1/8"
W 4–04	1'–6 5/16"	1'–8 1/2"	1'–10 7/8"	2'–2 3/4"	2'–6 3/4"	3'–0 1/16"	3'–5 7/16"	4'–0 3/16"	4'–7"	5'–3 3/16"	5'–11 7/16"	6'–8 7/8"	7'–6 1/4"	8'–4 5/8"	9'–2 3/4"	10'–2 1/16"	11'–1 3/16"	11'–10 7/8"	12'–8 1/2"	12'–5 1/8"

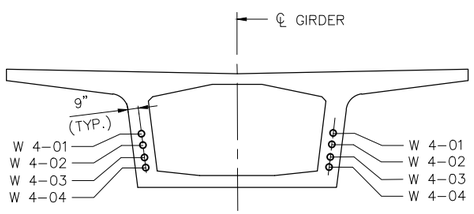

SECTION A-A

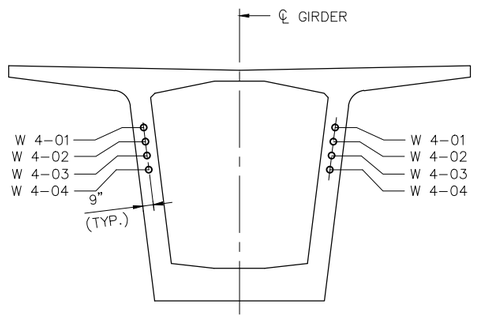

SECTION B-B

LEGEND:

SPAN NUMBER — TENDON MARK
WEB CONTINUITY TENDON
W 4–03

NOTES:

DIMENSIONS IN TABLE ARE VERTICAL DISTANCES FROM BOTTOM OF GIRDER TO ℄ OF TENDON DUCTS AT SECTION JOINTS, MID–POINTS BETWEEN SECTIONS AND DIMENSIONED LOCATIONS.

ALL ANCHORAGE AND DUCT HARDWARE FOR WEB CONTINUITY TENDONS SHALL ACCOMMODATE 27 X 0.6" DIA. STRAND TENDONS.

FOR DETAILS OF ANCHORAGES AT PIER TABLES, SEE "PIER TABLE POST–TENSIONING DETAILS" SHEETS.

FOR TENDON STRESSING FORCES, SEE "LONGITUDINAL P.T. QUANTITIES AND STRESSING SCHEDULE" SHEET.

FOR POST–TENSIONING ANCHORAGE PROTECTION, SEE "P.T. GROUTING & ANCHORAGE PROTECTION DETAILS" SHEETS.

FOR FUTURE POST–TENSIONING LAYOUT, SEE "FUTURE POST–TENSIOINING LAYOUT" SHEETS.

NO.	DATE	BY	CHECK	DESIGN	REVISION / SUBMITTAL

DESIGNED BY: ETN | CHECKED BY: NMP
DRAWN BY: JWH | CHECKED BY: JWJ

AECOM

90% SUBMISSION - 01/22/16

METROPOLITAN COUNCIL

SOUTHWEST Green Line LRT Extension

CIVIL - VOLUME 4D
EXCELSIOR BLVD
BRIDGE 27C10
CONTINUITY WEB P.T. LAYOUT 4

DISCIPLINE: STRUCTURE

SHEET NAME: CBR27C10-BRG-SUP-062

SHEET 118 OF 174

Jan, 15 2016 12:47 pm V:\3400_ADC\CAD\SEGMENT E1\PLAN SHEETS\STRUCTURES\CBR27C10\CBR27C10-BRG-SUP-059.dwg By: hodgesj

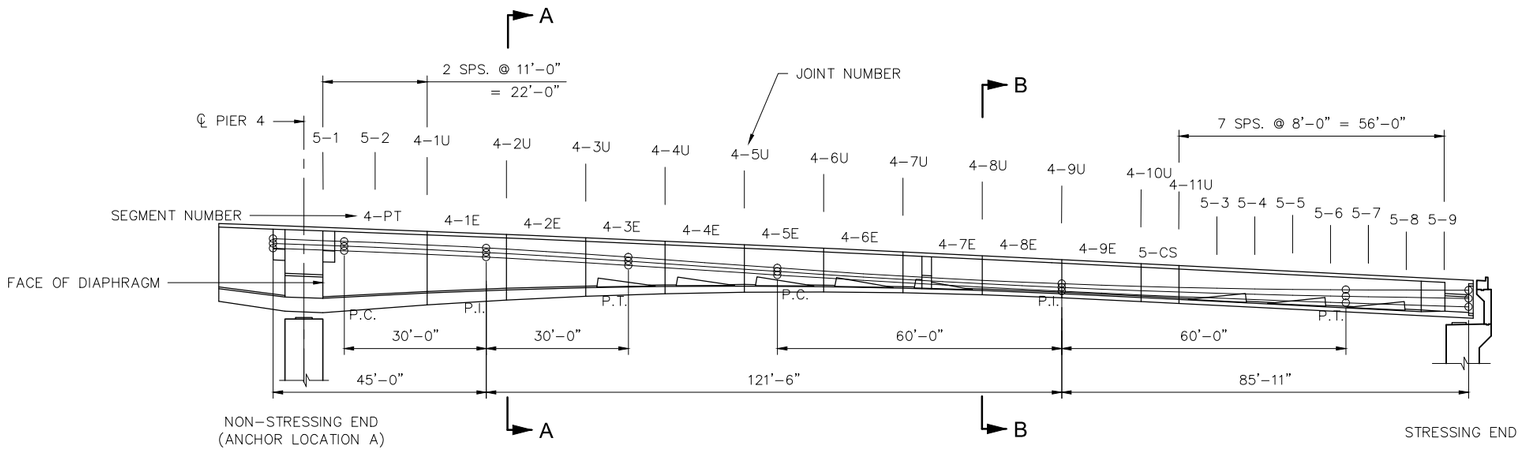

ELEVATION

	ANCHOR	5-1	5-2	4-1U	MID. SEGM.	4-2U	MID. SEGM.	4-3U	MID. SEGM.	4-4U	MID. SEGM.	4-5U	MID. SEGM.	4-6U	MID. SEGM.	4-7U	MID. SEGM.	4-8U	MID. SEGM.	4-9U	MID. SEGM.	4-10U	4-11U	5-3	5-4	5-5
W 5-01	14'-11 1/16"	15'-2 7/16"	13'-11 1/2"	12'-7 13/16"	11'-8 5/8"	10'-9"	9'-10 3/16"	8'-11"	8'-0 3/4"	7'-2 5/16"	6'-5 1/8"	5'-8"	5'-0 3/8"	4'-5 1/16"	3'-11 1/2"	3'-6 1/2"	3'-3 5/16"	3'-0 1/16"	2'-11 7/8"	2'-11 1/2"	3'-0 3/4"	3'-2 7/16"	3'-4 1/16"	3'-7 3/8"	3'-10 7/16"	4'-2"
W 5-02	13'-11 1/16"	14'-2 7/16"	12'-11 1/2"	11'-7 7/8"	10'-8 7/8"	9'-9 1/2"	8'-10 7/8"	8'-0"	7'-2 3/16"	6'-4 1/8"	5'-7 5/16"	4'-10 5/8"	4'-3 3/8"	3'-8 3/8"	3'-3 1/16"	2'-10 1/8"	2'-6 13/16"	2'-4"	2'-2 13/16"	2'-2"	2'-2 1/16"	2'-3 5/8"	2'-5 1/16"	2'-6 13/16"	2'-8 7/8"	2'-11 5/16"
W 5-03	12'-11 1/16"	13'-2 7/16"	11'-11 1/2"	10'-8 1/16"	9'-9 1/8"	8'-9 7/8"	7'-11 11/16"	7'-1 1/16"	6'-3 1/2"	5'-5 7/8"	4'-9 1/2"	4'-1 1/4"	3'-6 7/8"	2'-11 11/16"	2'-6 1/2"	2'-1 5/8"	1'-10 5/16"	1'-7 1/4"	1'-5 3/4"	1'-4 1/2"	1'-4 1/2"	1'-4 13/16"	1'-5 1/2"	1'-6 5/16"	1'-7 3/8"	1'-8 5/8"

	5-6	5-7	5-8	5-9	ANCHOR
W 5-01	4'-6"	4'-10 3/8"	5'-2 3/4"	5'-7 3/16"	5'-10"
W 5-02	3'-2 1/16"	3'-5"	3'-8 1/16"	3'-11 1/16"	4'-1"
W 5-03	1'-10 3/16"	1'-11 11/16"	2'-1 5/16"	2'-2 7/8"	2'-4"

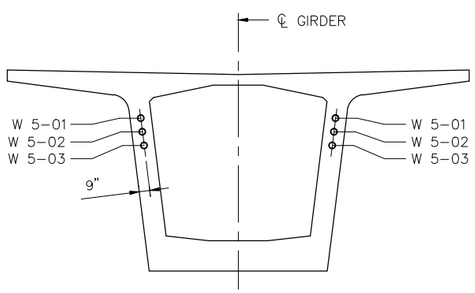

SECTION A-A

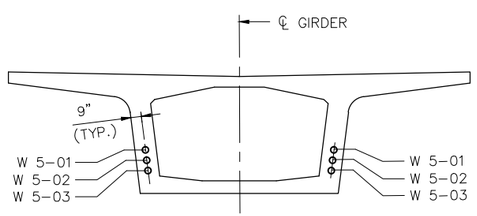

SECTION B-B

LEGEND:

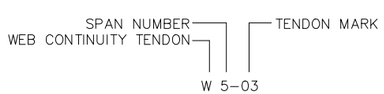

NOTES:

DIMENSIONS IN TABLE ARE VERTICAL DISTANCES FROM BOTTOM OF GIRDER TO ℄ OF TENDON DUCTS AT SECTION JOINTS, MID-POINTS BETWEEN SECTIONS AND DIMENSIONED LOCATIONS.

ALL ANCHORAGE AND DUCT HARDWARE FOR WEB CONTINUITY TENDONS SHALL ACCOMMODATE 27 X 0.6" DIA. STRAND TENDONS.

FOR DETAILS OF ANCHORAGES AT END DIAPHRAGM, SEE "END DIAPHRAGM P.T. DETAILS" SHEETS.

FOR DETAILS OF ANCHORAGES AT PIER TABLE, SEE "PIER TABLE POST-TENSIONING DETAILS" SHEETS.

FOR TENDON STRESSING FORCES, SEE "LONGITUDINAL P.T. QUANTITIES AND STRESSING SCHEDULE" SHEET.

FOR POST-TENSIONING ANCHORAGE PROTECTION, SEE "P.T. GROUTING & ANCHORAGE PROTECTION DETAILS" SHEETS.

FOR FUTURE POST-TENSIONING LAYOUT, SEE "FUTURE POST-TENSIOINING LAYOUT" SHEETS.

NO.	DATE	BY	CHECK	DESIGN	REVISION / SUBMITTAL

DESIGNED BY: ETN | CHECKED BY: NMP
DRAWN BY: JWH | CHECKED BY: JWJ

AECOM

90% SUBMISSION - 01/22/16

METROPOLITAN COUNCIL

SOUTHWEST Green Line LRT Extension

CIVIL - VOLUME 4D
EXCELSIOR BLVD
BRIDGE 27C10
CONTINUITY WEB P.T. LAYOUT 5

DISCIPLINE: STRUCTURE

SHEET NAME: CBR27C10-BRG-SUP-063

SHEET 119 OF 174

Jan, 15 2016 12:48 pm v:\3400_ADC\CAD\SEGMENT E1\PLAN SHEETS\STRUCTURES\CBR27C10\CBR27C10-BRG-SUP-059.dwg By: hodgesj

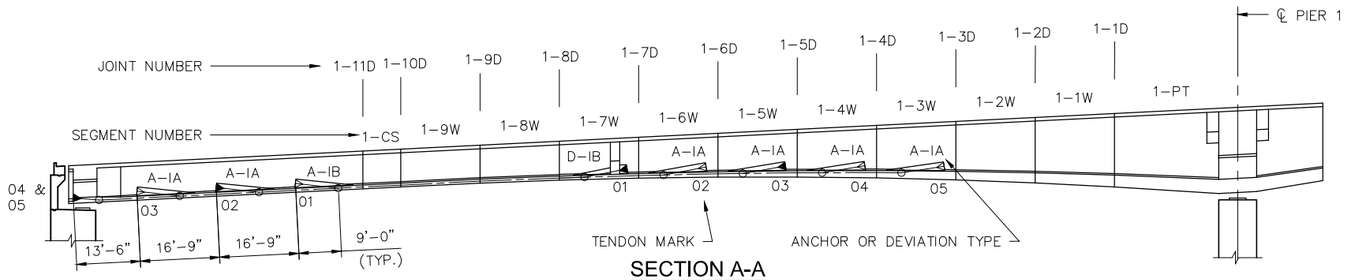

SECTION A-A

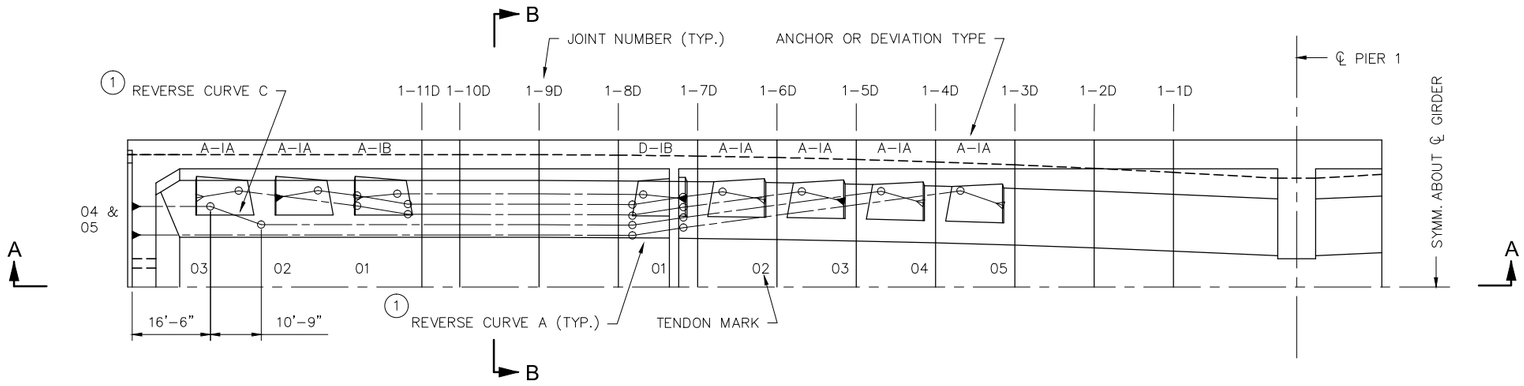

PARTIAL PLAN VIEW - BOTTOM SLAB

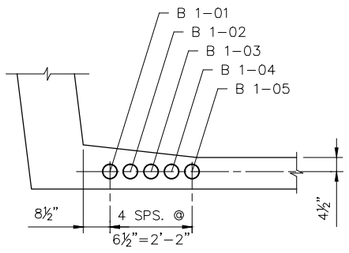

SECTION B-B

LEGEND:

SPAN NUMBER — TENDON MARK
BOTTOM SLAB CONTINUITY TENDON
B 1-03

NOTES:

◄ DENOTES STRESSING END OF TENDON.

◁ DENOTES NON-STRESSING END OF TENDON.

TENDONS ARE SYMMETRICAL ABOUT ℄ GIRDER.

FOR TENDON STRESSING FORCES SEE "LONGITUDINAL P.T. QUANTITIES AND STRESSING SCHEDULE" SHEET.

ALL ANCHORAGE AND DUCT HARDWARE FOR BOTTOM SLAB CONTINUITY TENDONS SHALL ACCOMMODATE 19 X 0.6" DIA. STRAND TENDONS, WITH A MINIMUM BENDING RADIUS OF 40'-0".

FOR POST-TENSIONING ANCHORAGE PROTECTION SEE "P.T. GROUTING & ANCHORAGE PROTECTION DETAILS" SHEETS.

FOR ANCHOR BLOCK DETAILS, SEE "BOTTOM SLAB ANCHOR BLOCK DETAILS 1" SHEET.

FOR DEVIATION RIB DETAILS, SEE "TYPE I DEVIATION RIB DETAILS" SHEET.

(1) FOR DETAILS OF REVERSE CURVES, SEE "CONTINUITY POST-TENSIONING LAYOUT 5" SHEET.

NO.	DATE	BY	CHECK	DESIGN	REVISION / SUBMITTAL

DESIGNED BY: ETN | CHECKED BY: NMP
DRAWN BY: JWH | CHECKED BY: JWJ

AECOM

90% SUBMISSION - 01/22/16

METROPOLITAN COUNCIL

SOUTHWEST Green Line LRT Extension

CIVIL - VOLUME 4D
EXCELSIOR BLVD
BRIDGE 27C10
CONTINUITY POST-TENSIONING LAYOUT 1

DISCIPLINE: STRUCTURE
SHEET NAME: CBR27C10-BRG-SUP-064

SHEET 120 OF 174

Jan, 15 2016 12:51 pm V:\3400_ADC\CAD\SEGMENT E1\PLAN SHEETS\STRUCTURES\CBR27C10\CBR27C10-BRG-SUP-064.dwg By: hodgesj

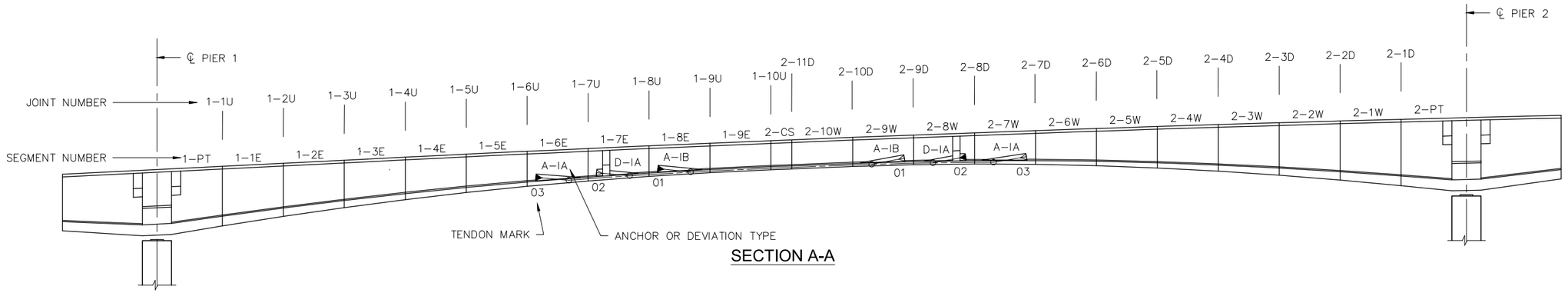

SECTION A-A

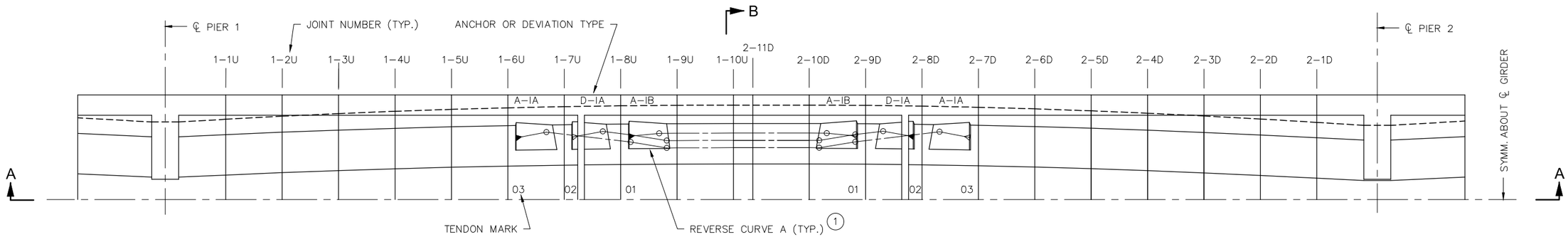

PARTIAL PLAN VIEW - BOTTOM SLAB

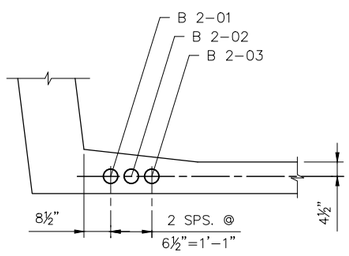

SECTION B-B

LEGEND:

SPAN NUMBER
BOTTOM SLAB CONTINUITY TENDON
TENDON MARK
B 2-03

NOTES:

◄ DENOTES STRESSING END OF TENDON.

◅ DENOTES NON-STRESSING END OF TENDON.

TENDONS ARE SYMMETRICAL ABOUT ℄ GIRDER.

FOR TENDON STRESSING FORCES SEE "LONGITUDINAL P.T. QUANTITIES AND STRESSING SCHEDULE" SHEET.

ALL ANCHORAGE AND DUCT HARDWARE FOR BOTTOM SLAB CONTINUITY TENDONS SHALL ACCOMMODATE 19 X 0.6" DIA. STRAND TENDONS, WITH A MINIMUM BENDING RADIUS OF 40'-0".

FOR POST-TENSIONING ANCHORAGE PROTECTION SEE "P.T. GROUTING & ANCHORAGE PROTECTION DETAILS" SHEETS.

FOR ANCHOR BLOCK DETAILS, SEE "BOTTOM SLAB ANCHOR BLOCK DETAILS 1" SHEET.

FOR DEVIATION RIB DETAILS, SEE "TYPE I DEVIATION RIB DETAILS" SHEET.

(1) FOR DETAILS OF REVERSE CURVES, SEE "CONTINUITY POST-TENSIONING LAYOUT 5" SHEET.

NO.	DATE	BY	CHECK	DESIGN	REVISION / SUBMITTAL

DESIGNED BY: ETN CHECKED BY: NMP
DRAWN BY: JWH CHECKED BY: JWJ

AECOM

90% SUBMISSION - 01/22/16

METROPOLITAN COUNCIL

SOUTHWEST Green Line LRT Extension

CIVIL - VOLUME 4D
EXCELSIOR BLVD
BRIDGE 27C10
CONTINUITY POST-TENSIONING LAYOUT 2

DISCIPLINE: STRUCTURE

SHEET NAME: CBR27C10-BRG-SUP-065

SHEET 121 OF 174

Jan. 15 2016 12:51 pm V:\3400_ADC\CAD\SEGMENT E1\PLAN SHEETS\STRUCTURES\CBR27C10\CBR27C10-BRG-SUP-064.dwg By: hodgesj

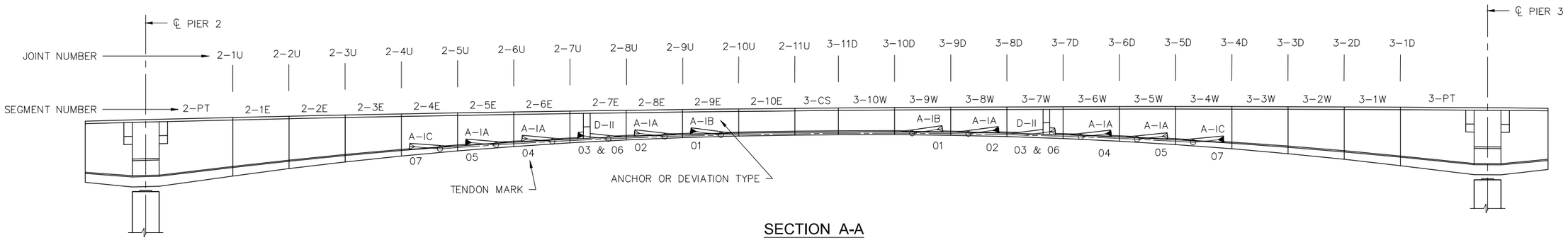

SECTION A-A

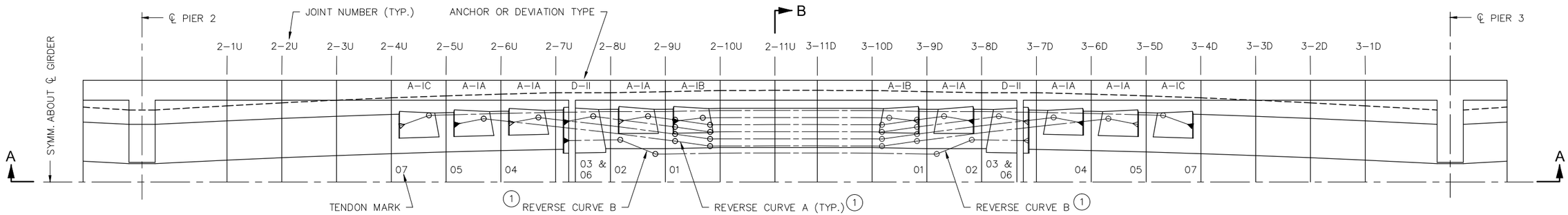

PARTIAL PLAN VIEW - BOTTOM SLAB

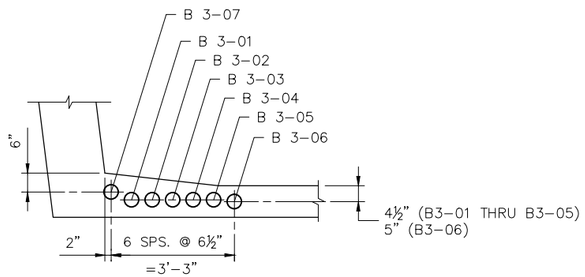

SECTION B-B

LEGEND:

SPAN NUMBER — TENDON MARK
BOTTOM SLAB CONTINUITY TENDON
B 3-07

NOTES:

◄ DENOTES STRESSING END OF TENDON.

◁ DENOTES NON-STRESSING END OF TENDON.

TENDONS ARE SYMMETRICAL ABOUT ℄ GIRDER.

FOR TENDON STRESSING FORCES SEE "LONGITUDINAL P.T. QUANTITIES AND STRESSING SCHEDULE" SHEET.

ALL ANCHORAGE AND DUCT HARDWARE FOR BOTTOM SLAB CONTINUITY TENDONS SHALL ACCOMMODATE 19 X 0.6" DIA. STRAND TENDONS, WITH A MINIMUM BENDING RADIUS OF 40'-0".

FOR POST-TENSIONING ANCHORAGE PROTECTION SEE "P.T. GROUTING & ANCHORAGE PROTECTION DETAILS" SHEETS.

FOR ANCHOR BLOCK DETAILS, SEE "BOTTOM SLAB ANCHOR BLOCK DETAILS 1" SHEET.

FOR DEVIATION RIB DETAILS, SEE "TYPE II DEVIATION RIB DETAILS" SHEET.

(1) FOR DETAILS OF REVERSE CURVES, SEE "CONTINUITY POST-TENSIONING LAYOUT 5" SHEET.

NO.	DATE	BY	CHECK	DESIGN	REVISION / SUBMITTAL

DESIGNED BY: ETN | CHECKED BY: NMP
DRAWN BY: JWH | CHECKED BY: JWJ

AECOM

90% SUBMISSION - 01/22/16

METROPOLITAN COUNCIL

SOUTHWEST Green Line LRT Extension

CIVIL - VOLUME 4D
EXCELSIOR BLVD
BRIDGE 27C10
CONTINUITY POST-TENSIONING LAYOUT 3

DISCIPLINE: STRUCTURE

SHEET NAME: CBR27C10-BRG-SUP-066

SHEET 122 OF 174

Jan, 15 2016 12:52 pm V:\3400_ADC\CAD\SEGMENT E1\PLAN SHEETS\STRUCTURES\CBR27C10\CBR27C10-BRG-SUP-064.dwg By: hodgesj

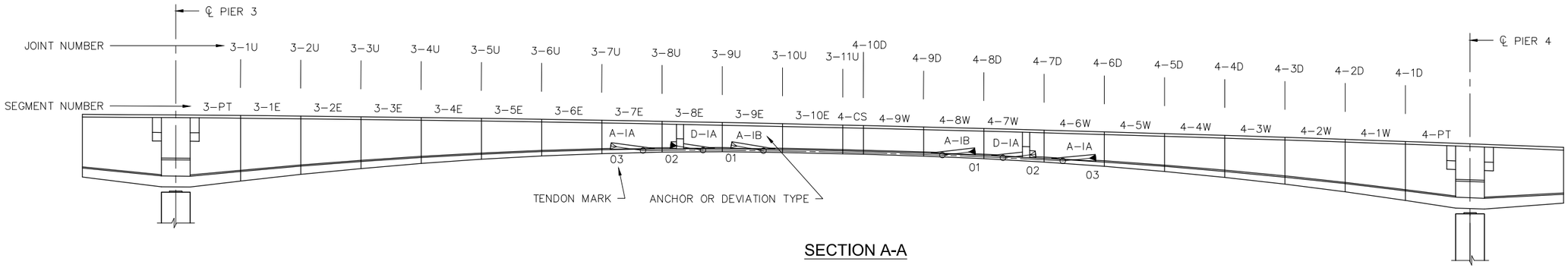

SECTION A-A

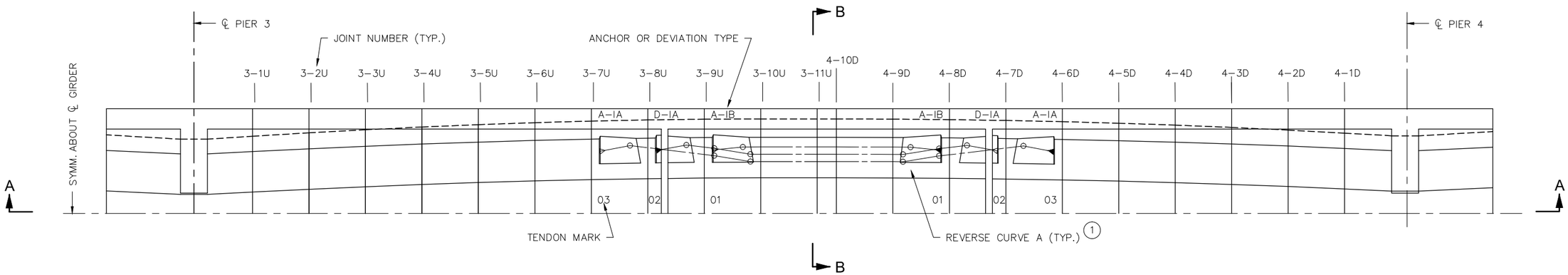

PARTIAL PLAN VIEW - BOTTOM SLAB

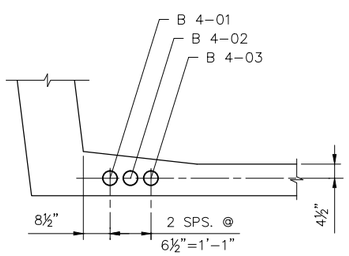

SECTION B-B

LEGEND:

SPAN NUMBER — TENDON MARK
BOTTOM SLAB CONTINUITY TENDON
B 4-03

NOTES:

◄ DENOTES STRESSING END OF TENDON.

◁ DENOTES NON-STRESSING END OF TENDON.

TENDONS ARE SYMMETRICAL ABOUT ℄ GIRDER.

FOR TENDON STRESSING FORCES SEE "LONGITUDINAL P.T. QUANTITIES AND STRESSING SCHEDULE" SHEET.

ALL ANCHORAGE AND DUCT HARDWARE FOR BOTTOM SLAB CONTINUITY TENDONS SHALL ACCOMMODATE 19 X 0.6" DIA. STRAND TENDONS, WITH A MINIMUM BENDING RADIUS OF 40'-0".

FOR POST-TENSIONING ANCHORAGE PROTECTION SEE "P.T. GROUTING & ANCHORAGE PROTECTION DETAILS" SHEETS.

FOR ANCHOR BLOCK DETAILS, SEE "BOTTOM SLAB ANCHOR BLOCK DETAILS 1" SHEET.

FOR DEVIATION RIB DETAILS, SEE "TYPE I DEVIATION RIB DETAILS" SHEET.

(1) FOR DETAILS OF REVERSE CURVES, SEE "CONTINUITY POST-TENSIONING LAYOUT 5" SHEET.

NO.	DATE	BY	CHECK	DESIGN	REVISION / SUBMITTAL

DESIGNED BY: ETN | CHECKED BY: NMP
DRAWN BY: JWH | CHECKED BY: JWJ

AECOM

90% SUBMISSION - 01/22/16

METROPOLITAN COUNCIL

SOUTHWEST Green Line LRT Extension

CIVIL - VOLUME 4D
EXCELSIOR BLVD
BRIDGE 27C10
CONTINUITY POST-TENSIONING LAYOUT 4

DISCIPLINE: STRUCTURE
SHEET NAME: CBR27C10-BRG-SUP-067

SHEET 123 OF 174

Jan, 15 2016 12:52 pm V:\3400_ADC\CAD\SEGMENT E1\PLAN SHEETS\STRUCTURES\CBR27C10\CBR27C10-BRG-SUP-064.dwg By: hodgesj

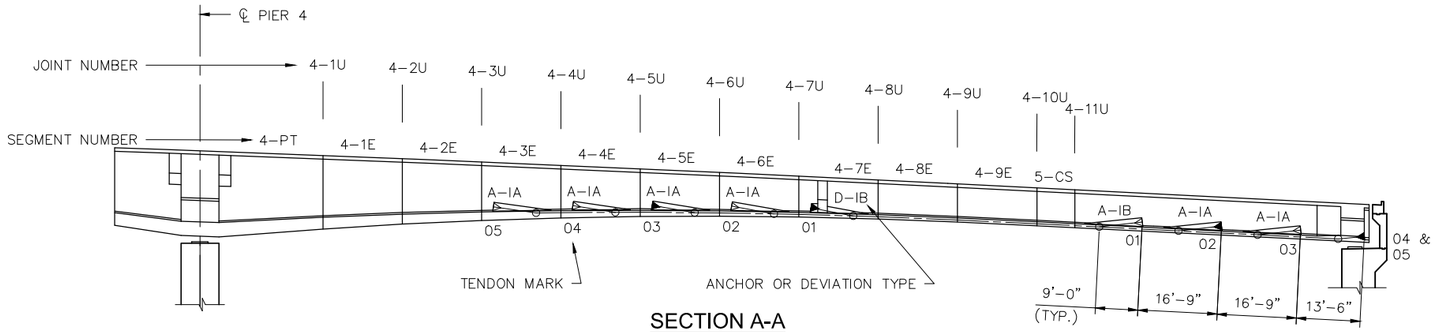

SECTION A-A

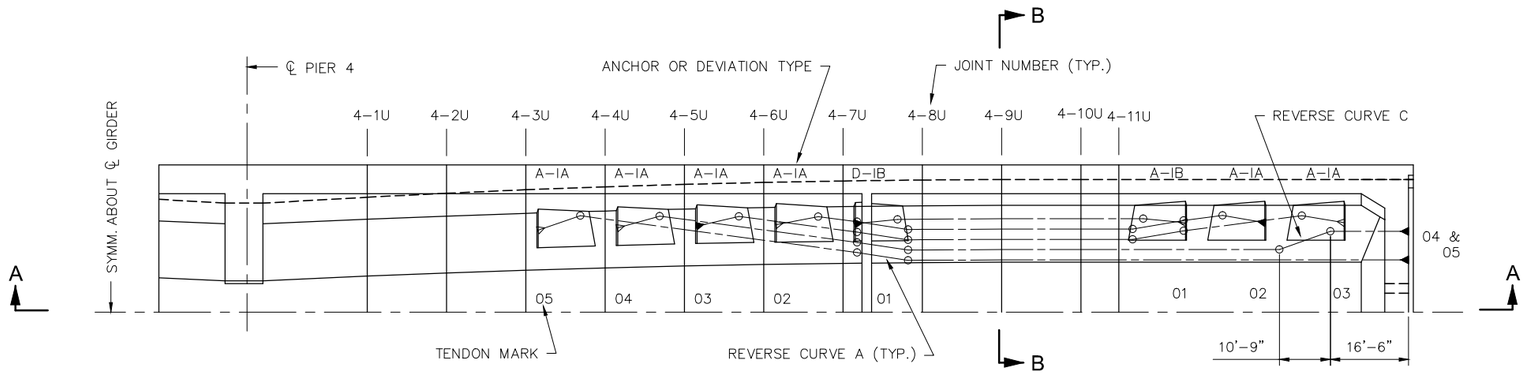

PARTIAL PLAN VIEW - BOTTOM SLAB

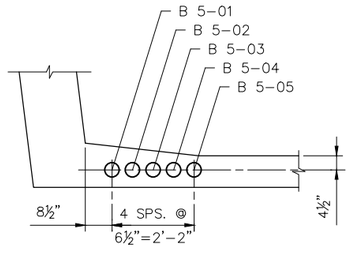

SECTION B-B

NOTES:

◄ DENOTES STRESSING END OF TENDON.

◅ DENOTES NON-STRESSING END OF TENDON.

TENDONS ARE SYMMETRICAL ABOUT ℄ GIRDER.

FOR TENDON STRESSING FORCES SEE "LONGITUDINAL P.T. QUANTITIES AND STRESSING SCHEDULE" SHEET.

ALL ANCHORAGE AND DUCT HARDWARE FOR BOTTOM SLAB CONTINUITY TENDONS SHALL ACCOMMODATE 19 X 0.6" DIA. STRAND TENDONS, WITH A MINIMUM BENDING RADIUS OF 40'-0".

FOR POST-TENSIONING ANCHORAGE PROTECTION SEE "P.T. GROUTING & ANCHORAGE PROTECTION DETAILS" SHEETS.

FOR ANCHOR BLOCK DETAILS, SEE "BOTTOM SLAB ANCHOR BLOCK DETAILS 1" SHEET.

FOR DEVIATION RIB DETAILS, SEE "TYPE I DEVIATION RIB DETAILS" SHEET.

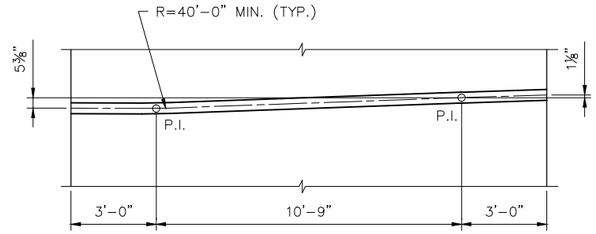

REVERSE CURVE A

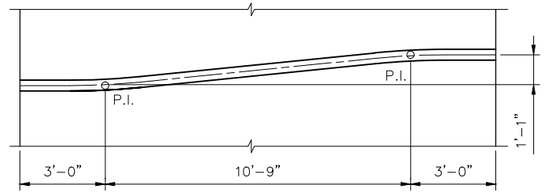

REVERSE CURVE B

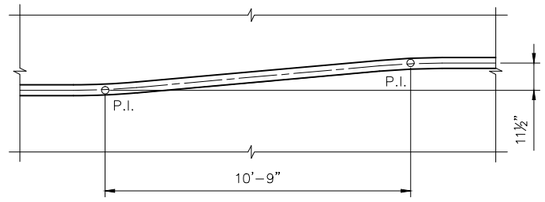

REVERSE CURVE C

LEGEND:

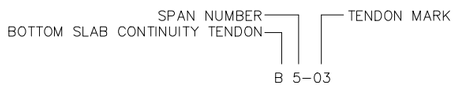

NO.	DATE	BY	CHECK	DESIGN	REVISION / SUBMITTAL

DESIGNED BY: ETN | CHECKED BY: NMP
DRAWN BY: JWH | CHECKED BY: JWJ

AECOM

90% SUBMISSION - 01/22/16

METROPOLITAN COUNCIL

SOUTHWEST Green Line LRT Extension

CIVIL - VOLUME 4D
EXCELSIOR BLVD
BRIDGE 27C10
CONTINUITY POST-TENSIONING LAYOUT 5

DISCIPLINE: STRUCTURE
SHEET NAME: CBR27C10-BRG-SUP-068

SHEET 124 OF 174

Jan, 15 2016 12:52 pm V:\3400_ADC\CAD\SEGMENT E1\PLAN SHEETS\STRUCTURES\CBR27C10\CBR27C10-BRG-SUP-064.dwg By: hodgesj

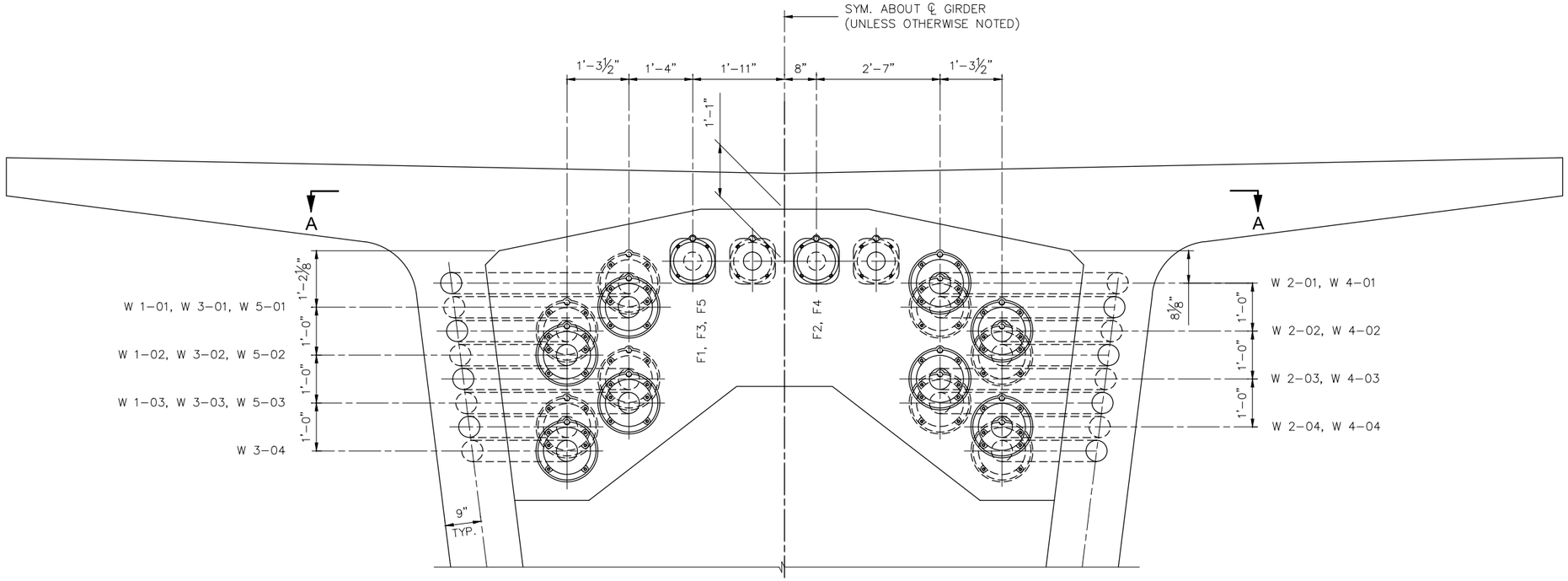

ANCHOR LOCATION A
(SPANS 1, 3 AND 5)

ANCHOR LOCATION B
(SPANS 2 AND 4)

PIER TABLE

LEGEND:

SPAN NUMBER — TENDON MARK
WEB CONTINUITY TENDON

W 1-03

FUTURE TENDON — F 1 — TENDON MARK

NOTES:

WORK THIS SHEET WITH "CONTINUITY WEB P.T. LAYOUT" SHEETS.

NO.	DATE	BY	CHECK	DESIGN	REVISION / SUBMITTAL

DESIGNED BY: ETN | CHECKED BY: NMP
DRAWN BY: JWH | CHECKED BY: JWJ

AECOM

90% SUBMISSION - 01/22/16

METROPOLITAN COUNCIL

SOUTHWEST
Green Line LRT Extension

CIVIL - VOLUME 4D
EXCELSIOR BLVD
BRIDGE 27C10
PIER TABLE POST-TENSIONING DETAILS 1

DISCIPLINE: STRUCTURE
SHEET NAME: CBR27C10-BRG-SUP-069

SHEET 125 OF 174

Jan, 15 2016 12:55 pm V:\3400_ADC\CAD\SEGMENT E1\PLAN SHEETS\STRUCTURES\CBR27C10\CBR27C10-BRG-SUP-069.dwg By: hodgesj

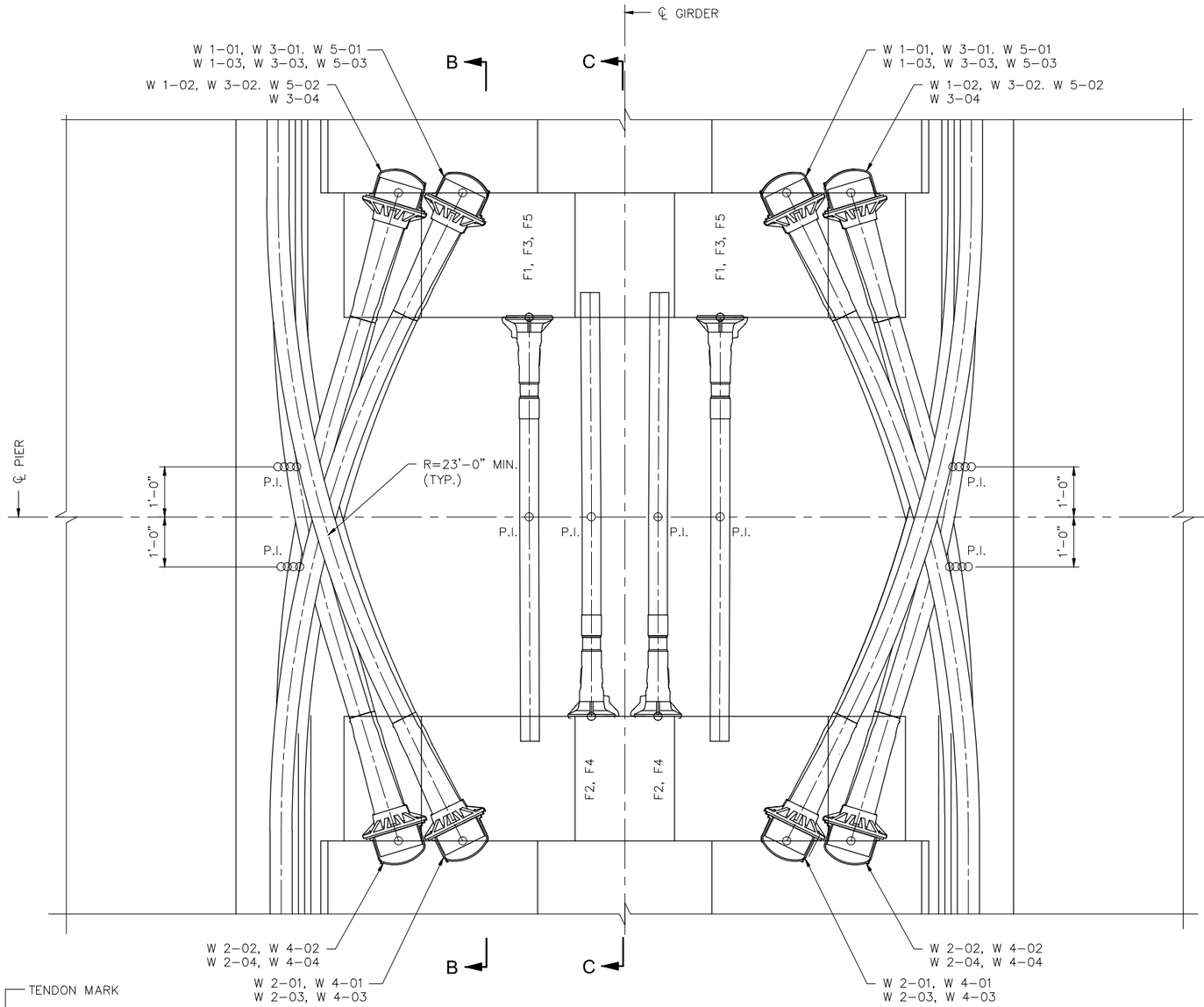

ANCHOR LOCATION A
(SPANS 1, 3 AND 5)

ANCHOR LOCATION B
(SPANS 2 AND 4)

LEGEND:

SPAN NUMBER — TENDON MARK
WEB CONTINUITY TENDON

W 1–03
FUTURE TENDON — F 1 — TENDON MARK

SECTION A-A

NOTES:
WORK THIS SHEET WITH "CONTINUITY WEB P.T. LAYOUT" SHEETS.

NO.	DATE	BY	CHECK	DESIGN	REVISION / SUBMITTAL

DESIGNED BY: ETN | CHECKED BY: NMP
DRAWN BY: JWH | CHECKED BY: JWJ

AECOM

90% SUBMISSION - 01/22/16

METROPOLITAN COUNCIL

SOUTHWEST Green Line LRT Extension

CIVIL - VOLUME 4D
EXCELSIOR BLVD
BRIDGE 27C10
PIER TABLE POST-TENSIONING DETAILS 2

DISCIPLINE: STRUCTURE
SHEET NAME: CBR27C10-BRG-SUP-070

SHEET 126 OF 174

Jan. 15 2016 12:55 pm v:\3400_ADC\CAD\SEGMENT E1\PLAN SHEETS\STRUCTURES\CBR27C10\CBR27C10-BRG-SUP-069.dwg By: hodgesj

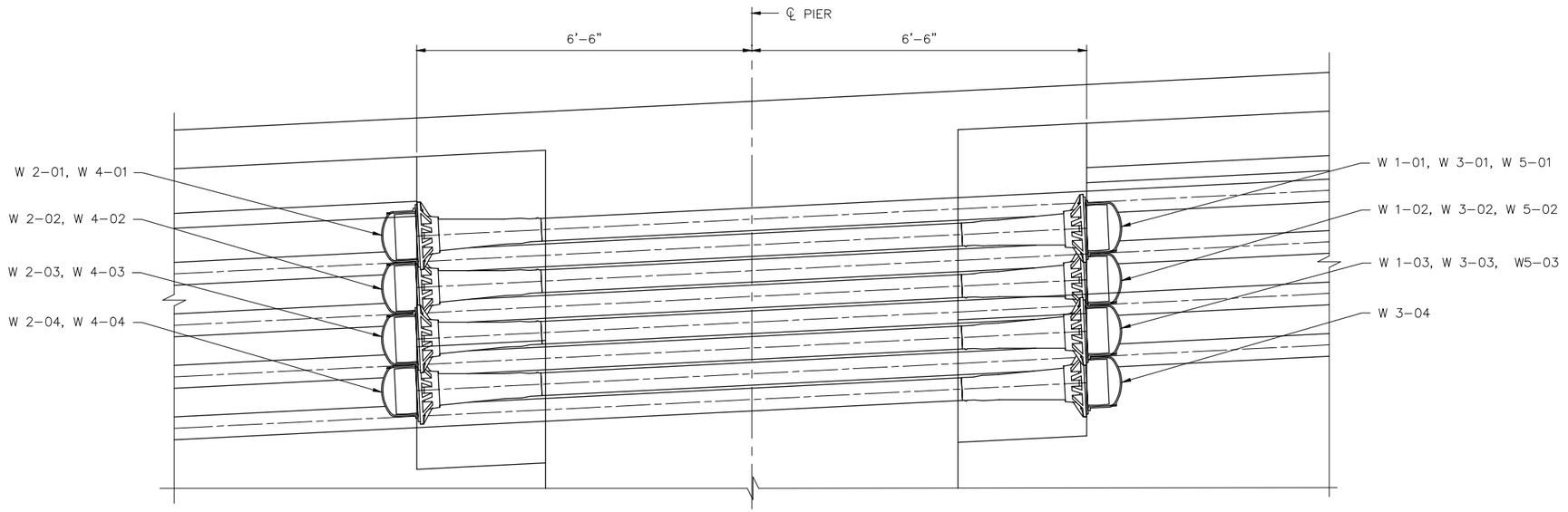

ANCHOR LOCATION B
(SPANS 2 AND 4)

ANCHOR LOCATION A
(SPANS 1, 3 AND 5)

SECTION B-B

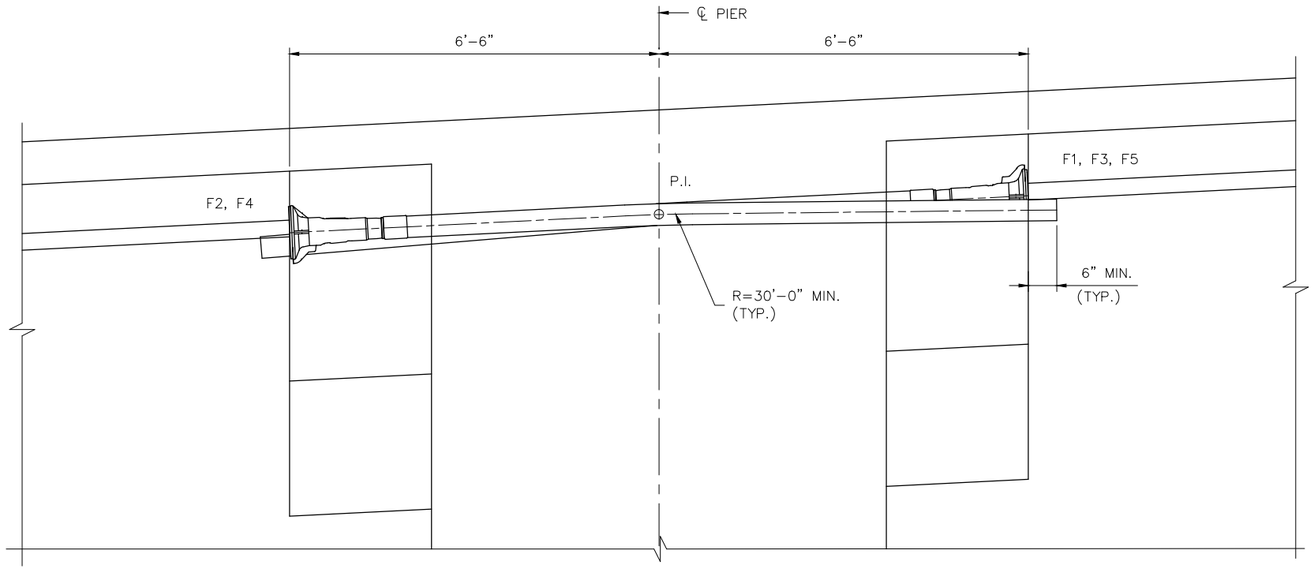

ANCHOR LOCATION B
(SPANS 2 AND 4)

ANCHOR LOCATION A
(SPANS 1, 3 AND 5)

SECTION C-C

LEGEND:

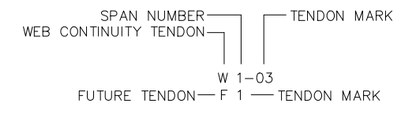

NOTES:

WORK THIS SHEET WITH "CONTINUITY WEB P.T. LAYOUT" SHEETS.

NO.	DATE	BY	CHECK	DESIGN	REVISION / SUBMITTAL

DESIGNED BY: ETN | CHECKED BY: NMP
DRAWN BY: JWH | CHECKED BY: JWJ

AECOM

90% SUBMISSION - 01/22/16

METROPOLITAN COUNCIL

SOUTHWEST Green Line LRT Extension

CIVIL - VOLUME 4D
EXCELSIOR BLVD
BRIDGE 27C10
PIER TABLE POST-TENSIONING DETAILS 3

DISCIPLINE: STRUCTURE

SHEET NAME: CBR27C10-BRG-SUP-071

SHEET 127 OF 174

Jan, 15 2016 12:55 pm V:\3400_ADC\CAD\SEGMENT E1\PLAN SHEETS\STRUCTURES\CBR27C10\CBR27C10-BRG-SUP-069.dwg By: hodgesj

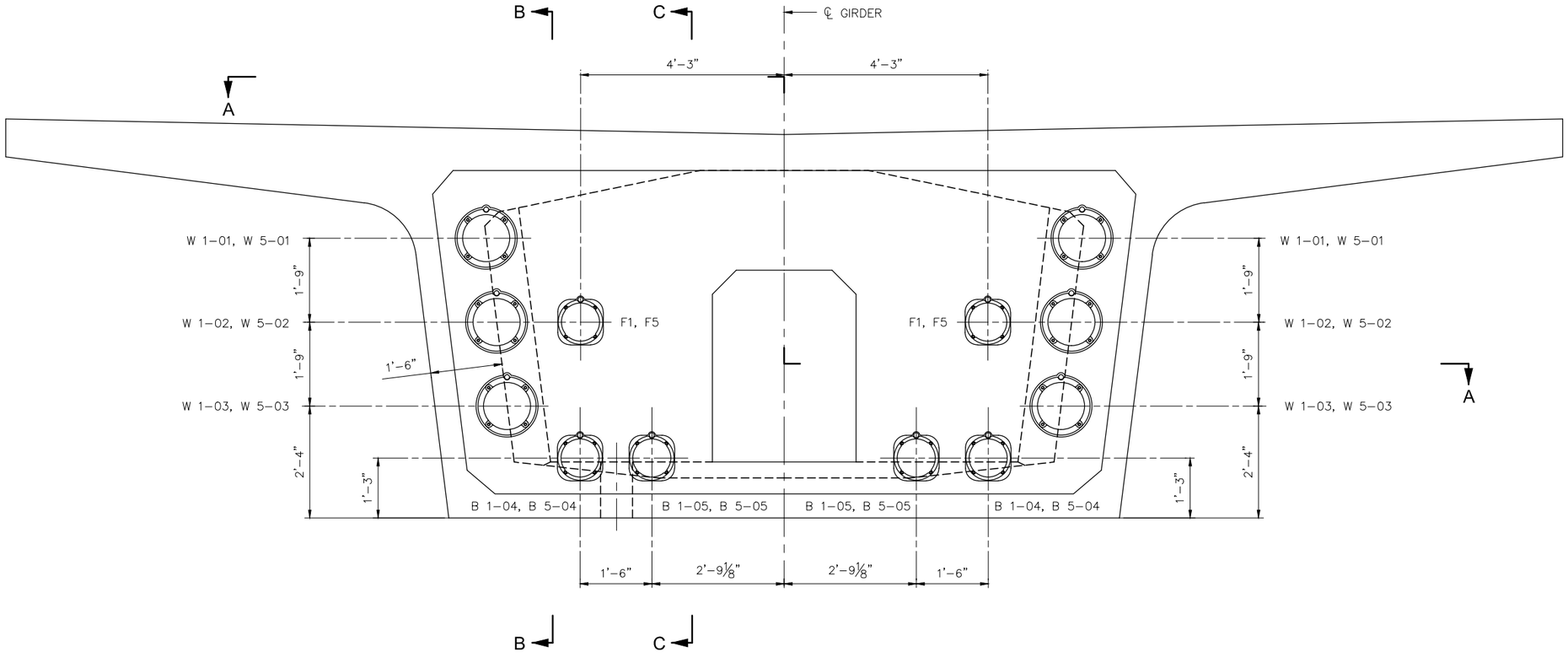

END DIAPHRAGM CROSS SECTION - EXPANSION JOINT FACE

LEGEND:

SPAN NUMBER — TENDON MARK
WEB/BOTTOM SLAB CONTINUITY TENDON — W 1–03
FUTURE TENDON — F 1 — TENDON MARK

NOTES:

WORK THIS SHEET WITH "CONTINUITY WEB P.T. LAYOUT" SHEETS.

NO.	DATE	BY	CHECK	DESIGN	REVISION / SUBMITTAL

DESIGNED BY: ETN | CHECKED BY: NMP
DRAWN BY: JWH | CHECKED BY: JWJ

AECOM

90% SUBMISSION - 01/22/16

METROPOLITAN COUNCIL

SOUTHWEST Green Line LRT Extension

CIVIL - VOLUME 4D
EXCELSIOR BLVD
BRIDGE 27C10
END DIAPHRAGM P.T. DETAILS 1

DISCIPLINE: STRUCTURE
SHEET NAME: CBR27C10-BRG-SUP-072

SHEET 128 OF 174

Jan, 15 2016 12:58 pm V:\3400_ADC\CAD\SEGMENT E1\PLAN SHEETS\STRUCTURES\CBR27C10\CBR27C10-BRG-SUP-072.dwg By: hodgesj

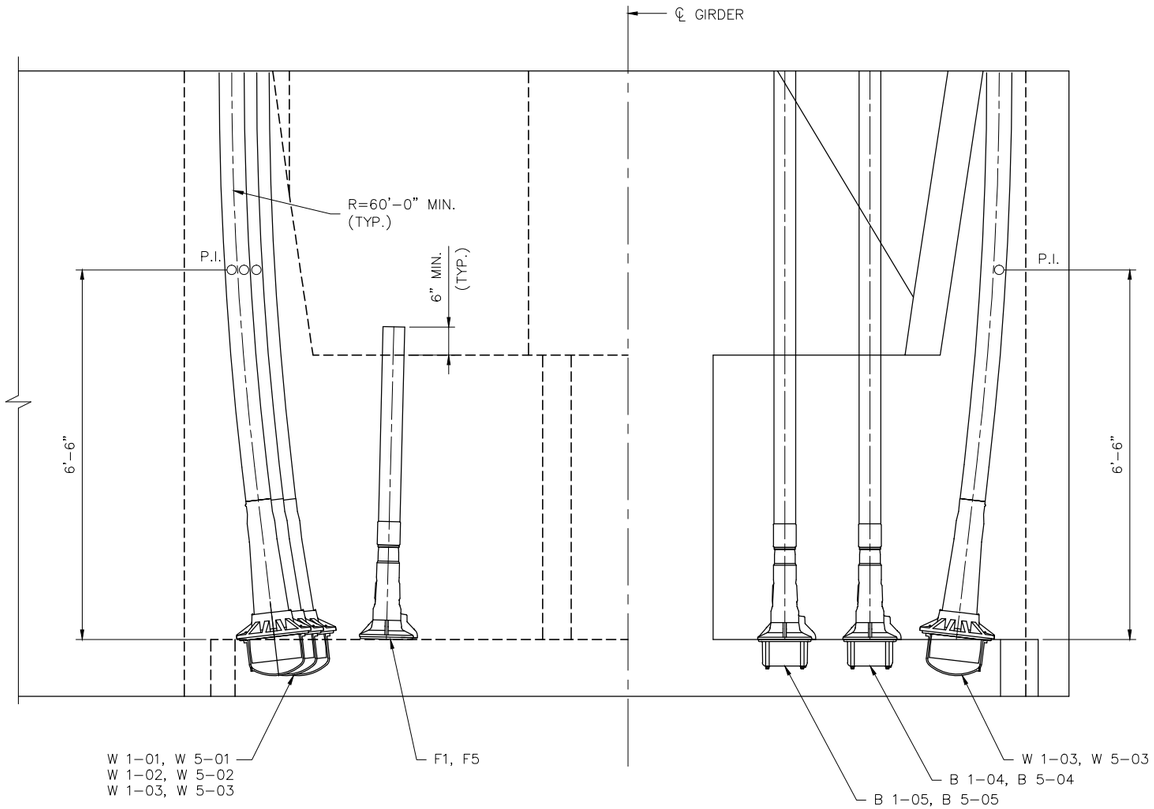

SECTION A-A

LEGEND:

SPAN NUMBER — TENDON MARK
WEB/BOTTOM SLAB CONTINUITY TENDON — W 1-03
FUTURE TENDON — F 1 — TENDON MARK

NOTES:

WORK THIS SHEET WITH "CONTINUITY WEB P.T. LAYOUT" SHEETS.

NO.	DATE	BY	CHECK	DESIGN	REVISION / SUBMITTAL

DESIGNED BY: ETN | CHECKED BY: NMP
DRAWN BY: JWH | CHECKED BY: JWJ

AECOM

90% SUBMISSION - 01/22/16

METROPOLITAN COUNCIL

SOUTHWEST Green Line LRT Extension

CIVIL - VOLUME 4D
EXCELSIOR BLVD
BRIDGE 27C10
END DIAPHRAGM P.T. DETAILS 2

DISCIPLINE: STRUCTURE

SHEET NAME: CBR27C10-BRG-SUP-073

SHEET 129 OF 174

Jan, 15 2016 12:58 pm V:\3400_ADC\CAD\SEGMENT E1\PLAN SHEETS\STRUCTURES\CBR27C10\CBR27C10-BRG-SUP-072.dwg By: hodgesj

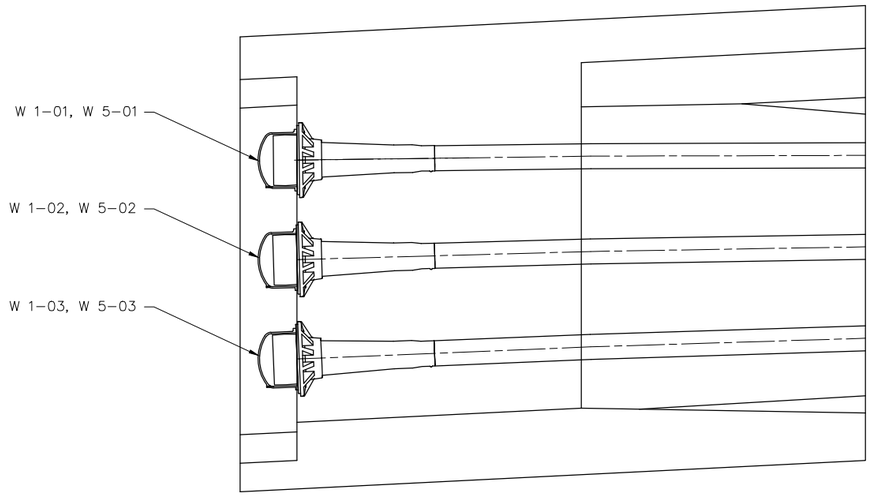

SECTION B-B

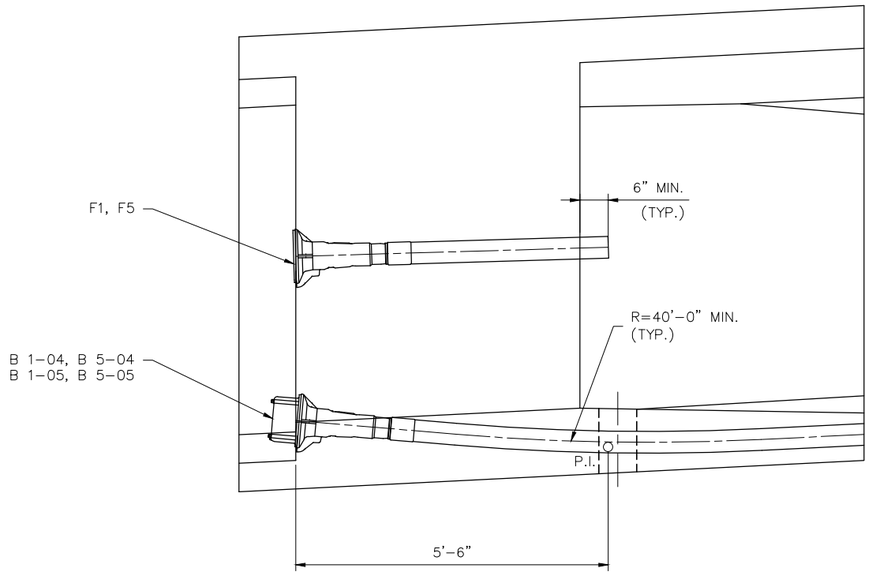

SECTION C-C

LEGEND:

SPAN NUMBER — TENDON MARK
WEB/BOTTOM SLAB CONTINUITY TENDON — W 1–03
FUTURE TENDON — F 1 — TENDON MARK

NOTES:

WORK THIS SHEET WITH "CONTINUITY WEB P.T. LAYOUT" SHEETS.

NO.	DATE	BY	CHECK	DESIGN	REVISION / SUBMITTAL

DESIGNED BY: ETN | CHECKED BY: NMP
DRAWN BY: JWH | CHECKED BY: JWJ

AECOM

90% SUBMISSION - 01/22/16

METROPOLITAN COUNCIL

SOUTHWEST Green Line LRT Extension

CIVIL - VOLUME 4D
EXCELSIOR BLVD
BRIDGE 27C10
END DIAPHRAGM P.T. DETAILS 3

DISCIPLINE: STRUCTURE
SHEET NAME: CBR27C10-BRG-SUP-074

SHEET 130 OF 174

Jan, 15 2016 12:58 pm V:\3400_ADC\CAD\SEGMENT E1\PLAN SHEETS\STRUCTURES\CBR27C10\CBR27C10-BRG-SUP-072.dwg By: hodgesj

NOTES:

ALL ANCHORAGE AND DUCT HARDWARE FOR FUTURE TENDONS SHALL ACCOMMODATE 19 X 0.6" DIA. STRAND TENDONS, WITH A MINIMUM BENDING RADIUS OF 30'-0".

FOR DETAILS OF ANCHORAGES AT END DIAPHRAGM, SEE "END DIAPHRAGM P.T. DETAILS" SHEETS.

FOR DETAILS OF ANCHORAGES AT PIER TABLES, SEE "PIER TABLE POST-TENSIOINING DETAILS" SHEETS.

FOR DEVIATION DETAILS, SEE "TYPE I & II DEVIATION RIB DETAILS" SHEETS.

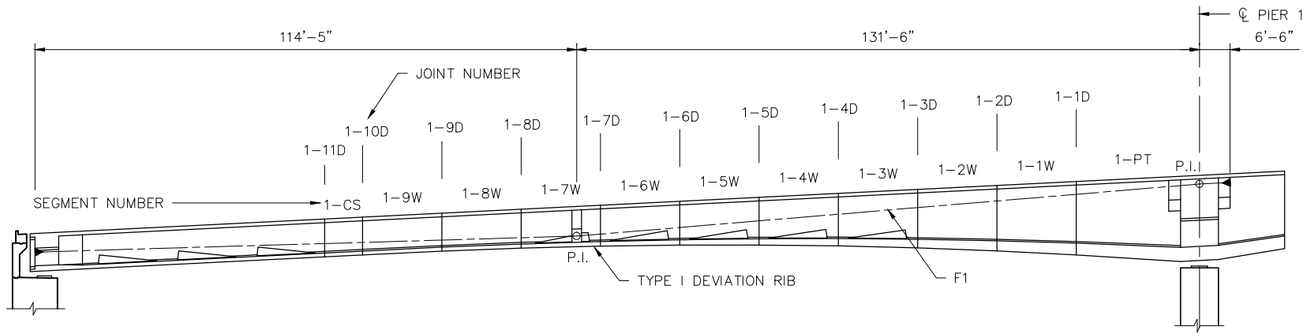

ELEVATION

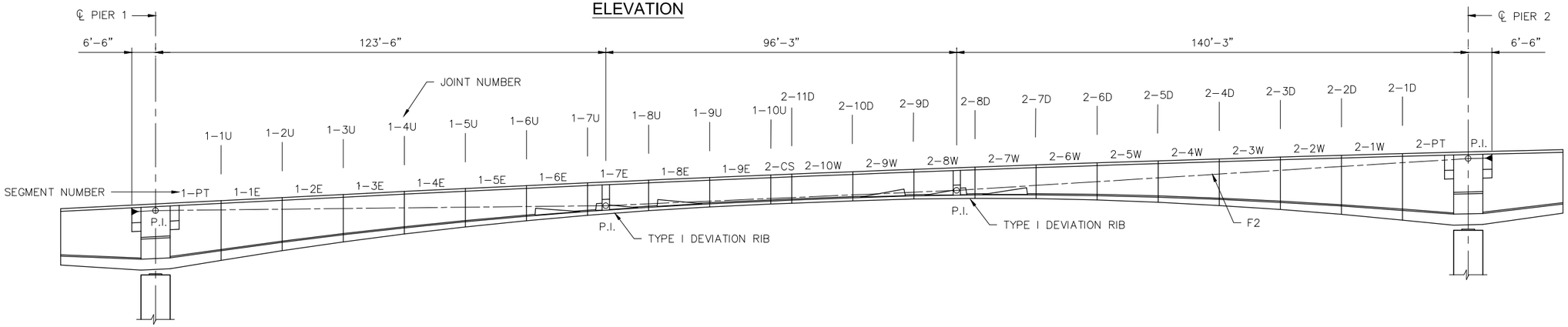

ELEVATION

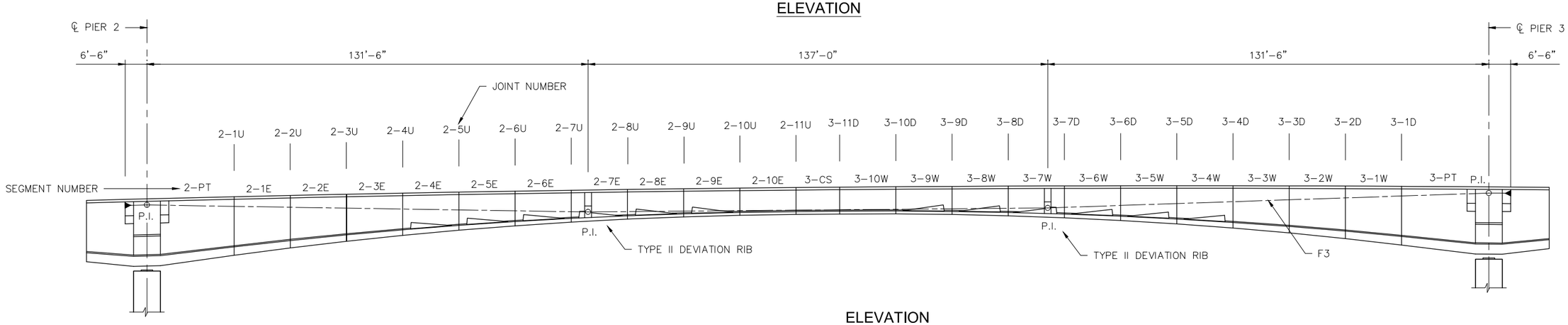

ELEVATION

NO.	DATE	BY	CHECK	DESIGN	REVISION / SUBMITTAL

DESIGNED BY: ETN | CHECKED BY: NMP
DRAWN BY: JWH | CHECKED BY: JWJ

AECOM

90% SUBMISSION - 01/22/16

METROPOLITAN COUNCIL

SOUTHWEST Green Line LRT Extension

CIVIL - VOLUME 4D
EXCELSIOR BLVD
BRIDGE 27C10
FUTURE POST-TENSIONING LAYOUT 1

DISCIPLINE: STRUCTURE

SHEET NAME: CBR27C10-BRG-SUP-075

SHEET 131 OF 174

Jan, 15 2016 01:01 pm V:\3400_ADC\CAD\SEGMENT E1\PLAN SHEETS\STRUCTURES\CBR27C10\CBR27C10-BRG-SUP-075.dwg By: hodgesj

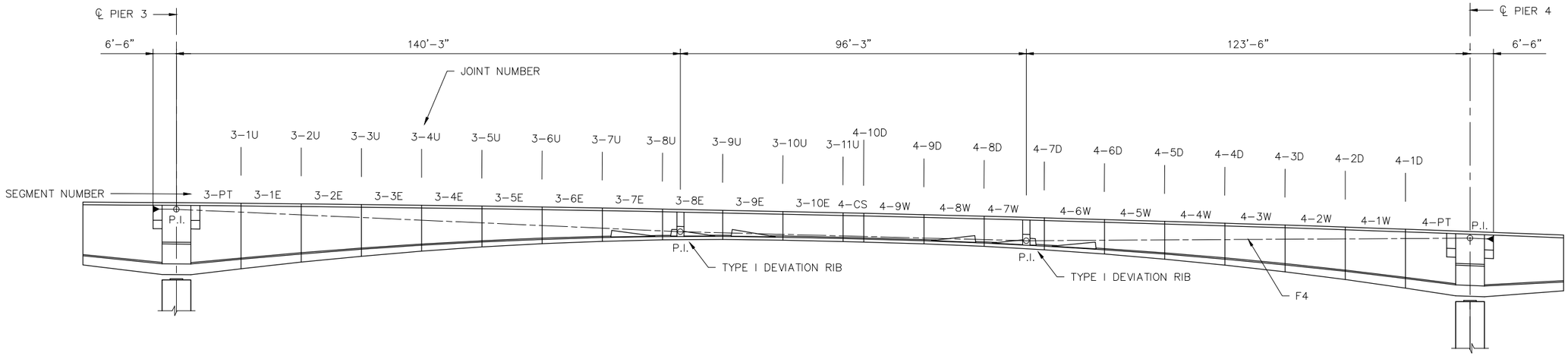

ELEVATION

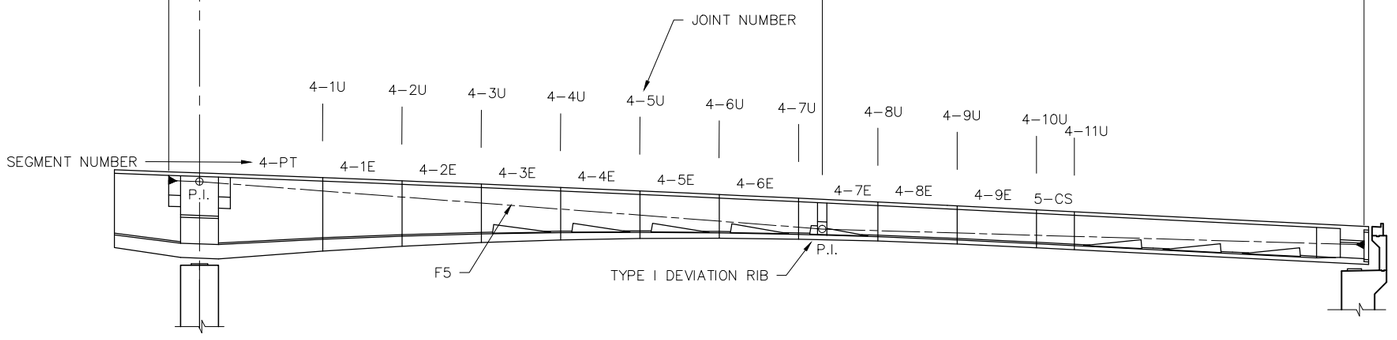

ELEVATION

NOTES:

ALL ANCHORAGE AND DUCT HARDWARE FOR FUTURE TENDONS SHALL ACCOMMODATE 19 X 0.6" DIA. STRAND TENDONS, WITH A MINIMUM BENDING RADIUS OF 30'–0".

FOR DETAILS OF ANCHORAGES AT END DIAPHRAGM, SEE "END DIAPHRAGM P.T. DETAILS" SHEETS.

FOR DETAILS OF ANCHORAGES AT PIER TABLES, SEE "PIER TABLE POST–TENSIOINING DETAILS" SHEETS.

FOR DEVIATION DETAILS, SEE "TYPE I & II DEVIATION RIB DETAILS" SHEETS.

NO.	DATE	BY	CHECK	DESIGN	REVISION / SUBMITTAL

DESIGNED BY: ETN | CHECKED BY: NMP
DRAWN BY: JWH | CHECKED BY: JWJ

AECOM

90% SUBMISSION - 01/22/16

METROPOLITAN COUNCIL

SOUTHWEST Green Line LRT Extension

CIVIL - VOLUME 4D
EXCELSIOR BLVD
BRIDGE 27C10
FUTURE POST-TENSIONING LAYOUT 2

DISCIPLINE: STRUCTURE

SHEET NAME: CBR27C10-BRG-SUP-076

SHEET 132 OF 174

Jan, 15 2016 01:01 pm V:\3400_ADC\CAD\SEGMENT E1\PLAN SHEETS\STRUCTURES\CBR27C10\CBR27C10-BRG-SUP-075.dwg By: hodgesj

LONGITUDINAL POST-TENSIONING STRAND QUANTITIES

PIER / SPAN NUMBER	TENDON DESCRIPTION	TENDON NUMBER	TENDON SIZE	TENDON LENGTH (FT)		NUMBER OF TENDONS	TOTAL TENDON WEIGHT (LBS)	STRESSING FORCE (KIPS)
				LEFT WEB	RIGHT WEB			
PIER 1	CANTILEVER	T 1-01	11 x 0.6" Ø	43.99	44.06	2	717	485
	↑	T 1-02	11 x 0.6" Ø	60.75	60.82	2	990	485
		T 1-03	11 x 0.6" Ø	77.51	77.64	2	1263	485
		T 1-04	11 x 0.6" Ø	94.29	94.38	2	1536	485
		T 1-05	11 x 0.6" Ø	111.01	111.21	2	1809	485
		T 1-06	11 x 0.6" Ø	127.81	127.93	2	2082	485
		T 1-07	11 x 0.6" Ø	144.53	144.79	2	2355	485
		T 1-08	11 x 0.6" Ø	161.35	161.49	2	2628	485
		T 1-09	11 x 0.6" Ø	178.00	178.30	2	2900	485
		T 1-10	11 x 0.6" Ø	194.83	195.00	2	3173	485
		T 1-11	11 x 0.6" Ø	211.51	211.85	2	3446	485
		T 1-12	11 x 0.6" Ø	228.36	228.54	2	3719	485
		T 1-13	11 x 0.6" Ø	245.05	245.44	2	3993	485
		T 1-14	11 x 0.6" Ø	261.92	262.09	2	4265	485
		T 1-15	11 x 0.6" Ø	278.57	279.00	2	4539	485
		T 1-16	11 x 0.6" Ø	295.47	295.63	2	4812	485
		T 1-17	11 x 0.6" Ø	312.10	312.56	2	5085	485
	↓	T 1-18	11 x 0.6" Ø	329.02	329.18	2	5358	485
	CANTILEVER	T 1-19	11 x 0.6" Ø	345.62	346.13	2	5631	485
PIER 2	CANTILEVER	T 2-01	11 x 0.6" Ø	44.01	44.01	2	716	485
	↑	T 2-02	11 x 0.6" Ø	60.77	60.77	2	989	485
		T 2-03	11 x 0.6" Ø	77.55	77.55	2	1263	485
		T 2-04	11 x 0.6" Ø	94.30	94.30	2	1535	485
		T 2-05	11 x 0.6" Ø	111.07	111.07	2	1808	485
		T 2-06	11 x 0.6" Ø	127.83	127.83	2	2081	485
		T 2-07	11 x 0.6" Ø	144.61	144.61	2	2354	485
		T 2-08	11 x 0.6" Ø	161.37	161.36	2	2627	485
		T 2-09	11 x 0.6" Ø	178.12	178.08	2	2899	485
		T 2-10	11 x 0.6" Ø	194.87	194.85	2	3172	485
		T 2-11	11 x 0.6" Ø	211.67	211.60	2	3445	485
		T 2-12	11 x 0.6" Ø	228.42	228.38	2	3718	485
		T 2-13	11 x 0.6" Ø	245.25	245.15	2	3992	485
		T 2-14	11 x 0.6" Ø	261.99	261.93	2	4265	485
		T 2-15	11 x 0.6" Ø	278.83	278.67	2	4538	485
		T 2-16	11 x 0.6" Ø	295.55	295.47	2	4811	485
		T 2-17	11 x 0.6" Ø	312.41	312.18	2	5084	485
		T 2-18	11 x 0.6" Ø	329.11	329.00	2	5357	485
		T 2-19	11 x 0.6" Ø	346.00	345.69	2	5630	485
	↓	T 2-20	11 x 0.6" Ø	362.69	362.54	2	5903	485
	CANTILEVER	T 2-21	11 x 0.6" Ø	379.63	379.22	2	6177	485

LONGITUDINAL POST-TENSIONING STRAND QUANTITIES

PIER / SPAN NUMBER	TENDON DESCRIPTION	TENDON NUMBER	TENDON SIZE	TENDON LENGTH (FT)		NUMBER OF TENDONS	TOTAL TENDON WEIGHT (LBS)	STRESSING FORCE (KIPS)
				LEFT WEB	RIGHT WEB			
PIER 3	CANTILEVER	T 3-01	11 x 0.6" Ø	44.12	43.98	2	717	485
	↑	T 3-02	11 x 0.6" Ø	60.87	60.75	2	990	485
		T 3-03	11 x 0.6" Ø	77.74	77.49	2	1264	485
		T 3-04	11 x 0.6" Ø	94.47	94.30	2	1537	485
		T 3-05	11 x 0.6" Ø	111.36	111.00	2	1810	485
		T 3-06	11 x 0.6" Ø	128.04	127.82	2	2083	485
		T 3-07	11 x 0.6" Ø	144.99	144.49	2	2356	485
		T 3-08	11 x 0.6" Ø	161.61	161.37	2	2629	485
		T 3-09	11 x 0.6" Ø	178.51	177.97	2	2902	485
		T 3-10	11 x 0.6" Ø	195.15	194.84	2	3175	485
		T 3-11	11 x 0.6" Ø	212.11	211.46	2	3448	485
		T 3-12	11 x 0.6" Ø	228.70	228.37	2	3721	485
		T 3-13	11 x 0.6" Ø	245.73	244.97	2	3994	485
		T 3-14	11 x 0.6" Ø	262.27	261.93	2	4267	485
		T 3-15	11 x 0.6" Ø	279.33	278.46	2	4540	485
		T 3-16	11 x 0.6" Ø	295.82	295.48	2	4813	485
		T 3-17	11 x 0.6" Ø	312.94	311.95	2	5087	485
		T 3-18	11 x 0.6" Ø	329.37	329.03	2	5359	485
		T 3-19	11 x 0.6" Ø	346.55	345.44	2	5633	485
	↓	T 3-20	11 x 0.6" Ø	362.92	362.57	2	5905	485
	CANTILEVER	T 3-21	11 x 0.6" Ø	380.18	378.94	2	6179	485
PIER 4	CANTILEVER	T 4-01	11 x 0.6" Ø	43.92	44.04	2	716	485
	↑	T 4-02	11 x 0.6" Ø	60.66	60.77	2	988	485
		T 4-03	11 x 0.6" Ø	77.38	77.60	2	1262	485
		T 4-04	11 x 0.6" Ø	94.16	94.31	2	1534	485
		T 4-05	11 x 0.6" Ø	110.83	111.15	2	1807	485
		T 4-06	11 x 0.6" Ø	127.65	127.83	2	2080	485
		T 4-07	11 x 0.6" Ø	144.31	144.72	2	2353	485
		T 4-08	11 x 0.6" Ø	161.17	161.37	2	2625	485
		T 4-09	11 x 0.6" Ø	177.77	178.21	2	2898	485
		T 4-10	11 x 0.6" Ø	194.62	194.88	2	3171	485
		T 4-11	11 x 0.6" Ø	211.25	211.77	2	3443	485
		T 4-12	11 x 0.6" Ø	228.13	228.40	2	3716	485
		T 4-13	11 x 0.6" Ø	244.74	245.34	2	3989	485
		T 4-14	11 x 0.6" Ø	261.67	261.93	2	4262	485
		T 4-15	11 x 0.6" Ø	278.23	278.91	2	4535	485
		T 4-16	11 x 0.6" Ø	295.19	295.45	2	4808	485
		T 4-17	11 x 0.6" Ø	311.70	312.47	2	5081	485
	↓	T 4-18	11 x 0.6" Ø	328.71	328.97	2	5354	485
	CANTILEVER	T 4-19	11 x 0.6" Ø	345.18	346.03	2	5626	485

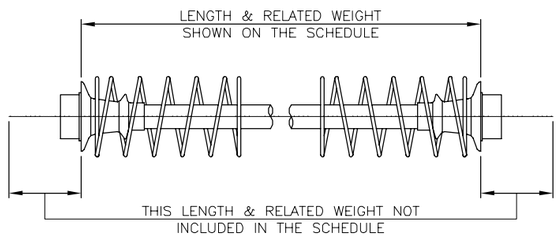

NOTES:

FOR TOP SLAB TRANSVERSE POST-TENSIONING DETAILS & QUANTITIES, SEE "TRANSVERSE POST-TENSIONING DETAILS" SHEET.

NO.	DATE	BY	CHECK	DESIGN	REVISION / SUBMITTAL

DESIGNED BY: ETN | CHECKED BY: NMP
DRAWN BY: TMW | CHECKED BY: JWJ

AECOM

90% SUBMISSION - 01/22/16

METROPOLITAN COUNCIL

SOUTHWEST Green Line LRT

CIVIL - VOLUME 4D
EXCELSIOR BLVD
BRIDGE 27C10
LONGITUDINAL P.T. STRESSING SCHEDULE 1

DISCIPLINE: STRUCTURE

SHEET NAME: CBR27C10-BRG-SUP-077

SHEET 133 OF 174

Jan, 15 2016 04:04 pm \\Nadtc2fp001\SWLRT\3400_ADC\CAD\SEGMENT E1\PLAN SHEETS\STRUCTURES\CBR27C10\CBR27C10-BRG-SUP-077.dwg By: WaltzT

LONGITUDINAL POST-TENSIONING STRAND QUANTITIES

PIER / SPAN NUMBER	TENDON DESCRIPTION	TENDON NUMBER	TENDON SIZE	TENDON LENGTH (FT)		NUMBER OF TENDONS	TOTAL TENDON WEIGHT (LBS)	STRESSING FORCE (KIPS)
				LEFT WEB	RIGHT WEB			
SPAN 1	CONTINUITY	W 1-01	25 x 0.6" Ø	253.27	253.49	2	9375	1145
	↑	W 1-02	25 x 0.6" Ø	252.87	253.09	2	9360	1145
		W 1-03	27 x 0.6" Ø	253.14	253.35	2	10120	1235
		B 1-01	19 x 0.6" Ø	70.19	70.22	2	1974	870
		B 1-02	19 x 0.6" Ø	103.72	103.76	2	2917	870
		B 1-03	19 x 0.6" Ø	137.25	137.30	2	3860	870
	↓	B 1-04	17 x 0.6" Ø	167.50	167.56	2	4215	780
	CONTINUITY	B 1-05	17 x 0.6" Ø	184.24	184.30	2	4636	780
SPAN 2	CONTINUITY	W 2-01	25 x 0.6" Ø	374.43	374.53	2	13856	1170
	↑	W 2-02	25 x 0.6" Ø	373.67	373.77	2	13828	1170
		W 2-03	27 x 0.6" Ø	374.22	374.33	2	14956	1265
		W 2-04	27 x 0.6" Ø	373.51	373.61	2	14927	1265
		B 2-01	17 x 0.6" Ø	67.98	67.98	2	1710	780
	↓	B 2-02	17 x 0.6" Ø	101.47	101.47	2	2553	780
	CONTINUITY	B 2-03	19 x 0.6" Ø	134.98	134.98	2	3796	870
SPAN 3	CONTINUITY	W 3-01	25 x 0.6" Ø	415.16	414.18	2	15343	1170
	↑	W 3-02	25 x 0.6" Ø	414.40	413.43	2	15315	1170
		W 3-03	27 x 0.6" Ø	414.93	413.98	2	16562	1265
		W 3-04	27 x 0.6" Ø	414.21	413.28	2	16533	1265
		B 3-01	19 x 0.6" Ø	75.39	75.21	2	2117	870
		B 3-02	19 x 0.6" Ø	108.95	108.71	2	3060	870
		B 3-03	19 x 0.6" Ø	142.50	142.22	2	4003	870
		B 3-04	19 x 0.6" Ø	176.05	175.75	2	4946	870
		B 3-05	19 x 0.6" Ø	209.60	209.28	2	5889	870
	↓	B 3-06	17 x 0.6" Ø	142.52	142.35	2	3584	780
	CONTINUITY	B 3-07	15 x 0.6" Ø	243.27	242.73	2	5395	685
SPAN 4	CONTINUITY	W 4-01	25 x 0.6" Ø	374.30	374.32	2	13849	1170
	↑	W 4-02	25 x 0.6" Ø	373.54	373.56	2	13821	1170
		W 4-03	27 x 0.6" Ø	374.08	374.10	2	14949	1265
		W 4-04	27 x 0.6" Ø	373.37	373.39	2	14920	1265
		B 4-01	17 x 0.6" Ø	67.94	67.94	2	1709	780
	↓	B 4-02	17 x 0.6" Ø	101.42	101.42	2	2552	780
	CONTINUITY	B 4-03	19 x 0.6" Ø	134.90	134.90	2	3793	870
SPAN 5	CONTINUITY	W 5-01	25 x 0.6" Ø	252.83	253.39	2	9365	1145
	↑	W 5-02	25 x 0.6" Ø	252.43	252.98	2	9350	1145
		W 5-03	27 x 0.6" Ø	252.69	253.22	2	10108	1235
		B 5-01	19 x 0.6" Ø	70.03	70.14	2	1971	870
		B 5-02	19 x 0.6" Ø	103.52	103.68	2	2913	870
		B 5-03	19 x 0.6" Ø	137.02	137.21	2	3856	870
	↓	B 5-04	17 x 0.6" Ø	167.25	167.45	2	4211	780
	CONTINUITY	B 5-05	17 x 0.6" Ø	183.96	184.15	2	4631	780

Jan, 15 2016 04:04 pm \\Madtc2fp001\SWLRT\3400_ADC\CAD\SEGMENT E1\PLAN SHEETS\STRUCTURES\CBR27C10\CBR27C10-BRG-SUP-077.dwg By: WaltzT

NO.	DATE	BY	CHECK	DESIGN	REVISION / SUBMITTAL

DESIGNED BY: ETN | CHECKED BY: NMP
DRAWN BY: TMW | CHECKED BY: JWJ

AECOM

90% SUBMISSION - 01/22/16

METROPOLITAN COUNCIL

SOUTHWEST Green Line LRT

CIVIL - VOLUME 4D
EXCELSIOR BLVD
BRIDGE 27C10
LONGITUDINAL P.T. STRESSING SCHEDULE 2

DISCIPLINE: STRUCTURE
SHEET NAME: CBR27C10-BRG-SUP-078

SHEET 134 OF 174

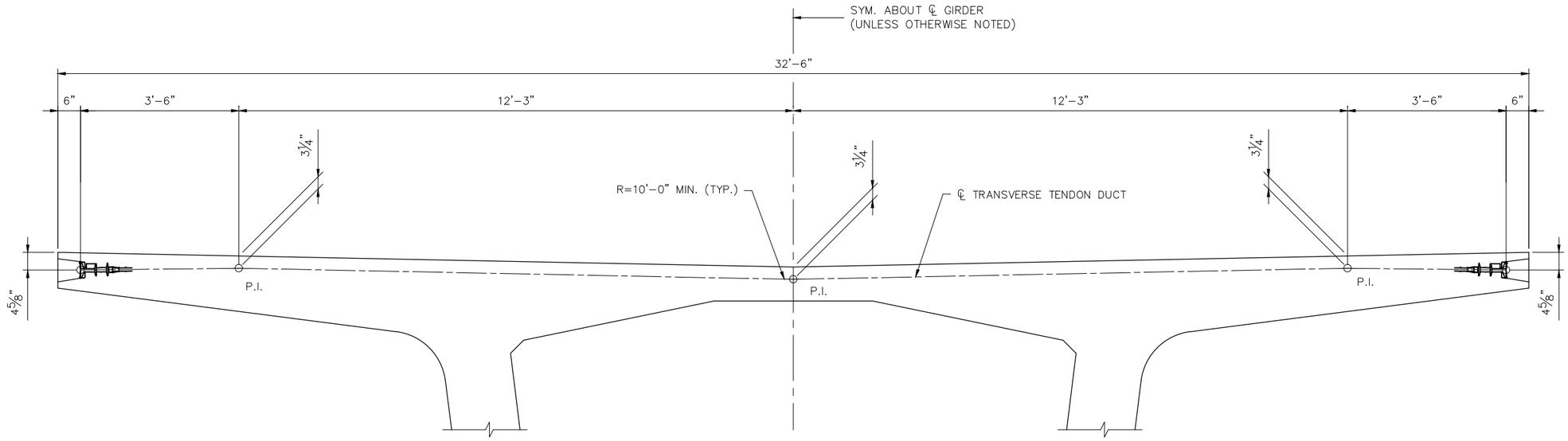

PARTIAL SECTION

TENDON SCHEDULE

SEGMENT TYPE	TENDON SIZE	NUMBER OF TENDONS	TENDON LENGTH (FT)	TENDON WEIGHT (LBS)	NUMBER OF SEGMENTS	TOTAL WEIGHT (LBS)
CANTILEVER SEGMENT	4X0.6" DIA.	3	31.51'	93.3	76	21,272
PIER TABLE SEGMENT	4X0.6" DIA.	12	31.51'	93.3	4	4,478
END DIAPHRAGM SEGMENT	4X0.6" DIA.	4	31.51'	93.3	2	746
5'-9" CLOSURE SEGMENT	4X0.6" DIA.	1	31.51'	93.3	2	187
8'-0" CLOSURE SEGMENT	4X0.6" DIA.	2	31.51'	93.3	2	373
13'-0" CLOSURE SEGMENT	4X0.6" DIA.	3	31.51'	93.3	1	280
C.I.P. ON FALSEWORK	4X0.6" DIA.	9	31.51'	93.3	2	1,679

BILL OF REINFORCEMENT TRANSVERSE TENDON (ONE TENDON ONLY)

BAR	NO.	LENGTH	SHAPE	LOCATION
ST401E	8	3'-0"	STR.	TOP SLAB
ST402E	8	3'-1"		TOP SLAB

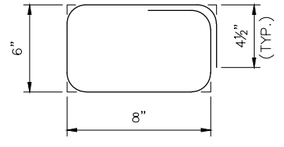

ST402E

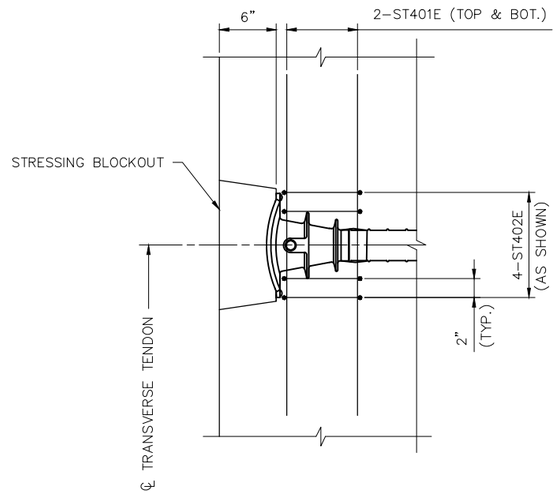

ANCHORAGE DETAIL

NOTES:

ALL TENDONS SHALL BE SINGLE-END STRESSED.

ADJACENT TRANSVERSE TENDONS SHALL BE STRESSED FROM ALTERNATE SIDES.

TENDON STRESSING FORCE SHALL BE 47 KIPS PER STRAND.

TRANSVERSE TENDONS SHALL BE STRESSED PRIOR TO STRIPPING FORMS.

DIMENSIONS SHOWN FOR ANCHORAGE RECESS MAY VARY DEPENDING UPON THE POST-TENSIONING SYSTEM USED.

TENDON WEIGHTS SHOWN IN QUANTITY TABLE ARE MEASURED FROM ANCHOR PLATE TO ANCHOR PLATE. ADDITIONAL STRAND BEYOND THE PLATES FOR JACKING AND WEIGHT OF ANY ANCHORAGE HARDWARE ARE NOT INCLUDED.

FOR POST-TENSIONING ANCHORAGE PROTECTION, SEE "P.T. GROUTING & ANCHORAGE PROTECTION DETAILS" SHEETS.

NO.	DATE	BY	CHECK	DESIGN	REVISION / SUBMITTAL

DESIGNED BY: NMP CHECKED BY: JWJ
DRAWN BY: JWH CHECKED BY: JWJ

AECOM

90% SUBMISSION - 01/22/16

METROPOLITAN COUNCIL

SOUTHWEST Green Line LRT Extension

CIVIL - VOLUME 4D
EXCELSIOR BLVD
BRIDGE 27C10
TRANSVERSE POST-TENSIONING DETAILS

DISCIPLINE: STRUCTURE
SHEET NAME: CBR27C10-BRG-SUP-079

SHEET 135 OF 174

Jan, 18 2016 03:37 pm C:\Users\HodgesJ\appdata\local\temp\AcPublish_7448\CBR27C10-BRG-SUP-079.dwg By: hodgesj

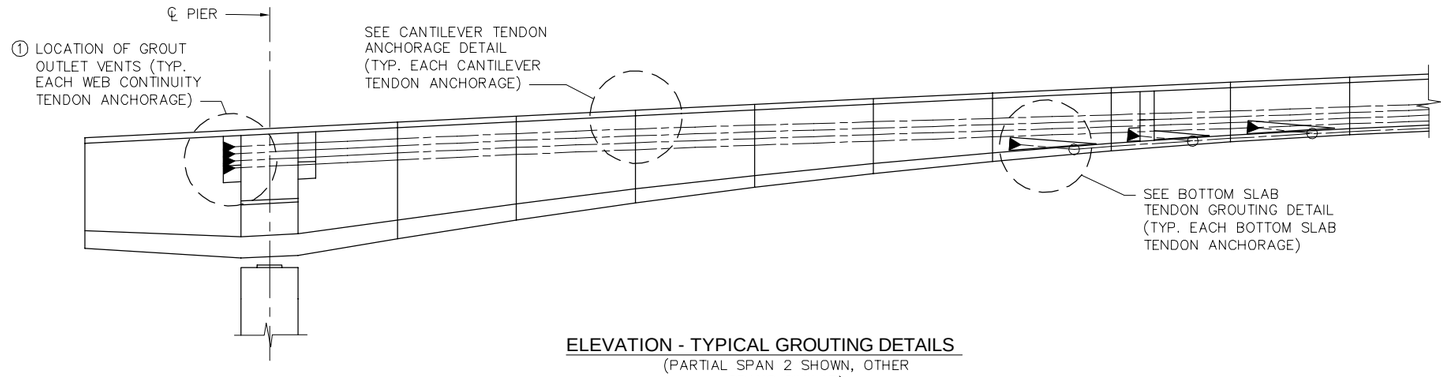

ELEVATION - TYPICAL GROUTING DETAILS

(PARTIAL SPAN 2 SHOWN, OTHER SPANS SIMILAR)

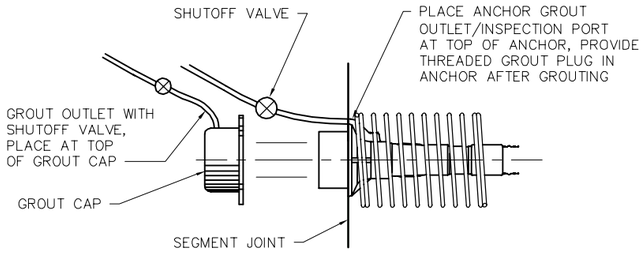

CANTILEVER TENDON ANCHORAGE DETAIL

(FACE INSPECTED ANCHOR)

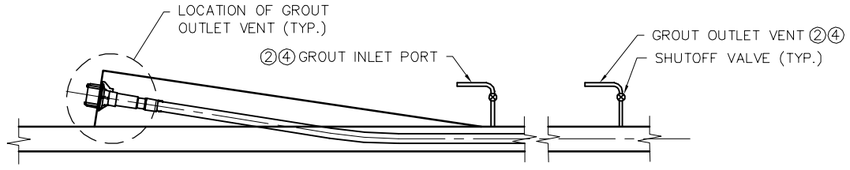

BOTTOM SLAB TENDON GROUTING DETAIL

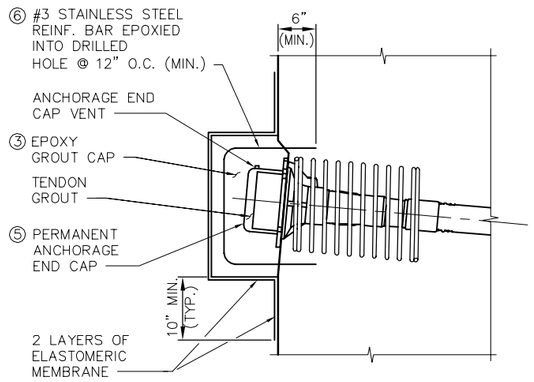

WEB CONTINUITY AND BOTTOM SLAB TENDON ANCHORAGE PROTECTION

(VALID FOR ALL WEB CONTINUITY AND BOTTOM SLAB TENDONS)
(EPOXY GROUT CAPS MAY BE FOR INDIVIDUAL TENDONS OR GROUPS OF TENDONS)

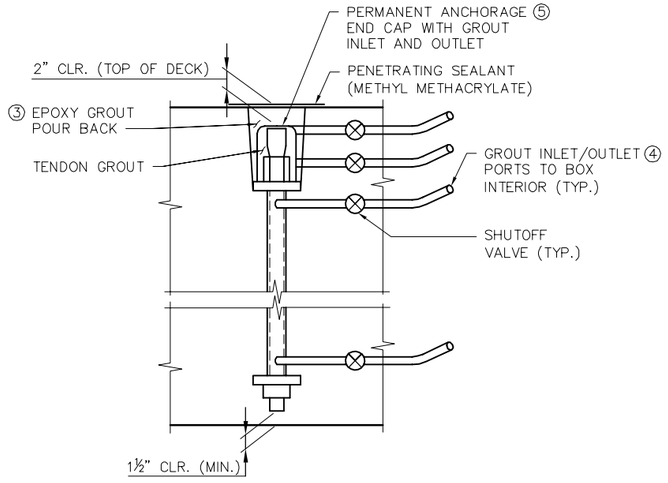

POST-TENSIONING BARS

NOTES:

THIS DRAWING IS A SCHEMATIC OF THE GROUTING AND ANCHORAGE PROTECTION DETAILS REQUIRED FOR THIS PROJECT. SEE THE PROJECT SPECIAL PROVISIONS FOR ADDITIONAL REQUIREMENTS.

GROUT INLET PORTS AND OUTLET VENTS FOR THE CANTILEVER TENDONS AND TRANSVERSE TENDONS SHALL BE LOCATED AT EACH ANCHORAGE.

POSITIVE MECHANICAL SHUT–OFF VALVES ARE REQUIRED AT ALL GROUT INLET PORTS AND OUTLET VENTS.

ELASTOMERIC WATERPROOFING MEMBRANE SHALL BE IN ACCORDANCE WITH THE PROJECT SPECIAL PROVISIONS.

① THE GROUT INLET PORT FOR THE WEB CONTINUITY TENDONS SHALL BE LOCATED BETWEEN THE TWO DEVIATION RIBS IN A GIVEN SPAN AT THE LOW POINT OF THE TENDONS ACCOUNTING FOR THE GLOBAL BRIDGE GEOMETRY. GROUT OUTLET VENTS SHALL BE LOCATED AT EACH ANCHORAGE.

② THE GROUT INLET PORT FOR THE BOTTOM SLAB TENDONS SHALL BE LOCATED JUST OUTSIDE OF THE ANCHOR BLOCK AT THE LOW END OF THE TENDONS ACCOUNTING FOR THE GLOBAL BRIDGE GEOMETRY. GROUT OUTLET VENTS SHALL BE LOCATED AT EACH ANCHORAGE AND THE TENDON HIGH POINT ACCOUNTING FOR THE GLOBAL BRIDGE GEOMETRY.

③ EPOXY GROUT CAPS AND POUR BACKS AT ANCHORAGES SHALL BE A MIX APPROVED BY THE ENGINEER PRIOR TO USE. CONCRETE BLOCKS SHALL PROVIDE 2" MIN. COVER OVER THE END CAPS.

④ CUT OFF GROUT TUBES FLUSH AND COVER TUBE AND 2" BEYOND WITH TWO LAYERS OF ELASTOMERIC MEMBRANE.

⑤ PERMANENT ANCHORAGE END CAPS SHALL BE MADE OF A MATERIAL IN ACCORDANCE WITH THE PROJECT SPECIAL PROVISIONS. CAPS SHALL COMPLETELY ENCAPSULATE THE STRAND TAILS AND, WHERE APPLICABLE, THE WEDGE PLATE CAPS SHALL PROVIDE 1" MIN. CLEARANCE FROM THE CAP TO THE P.T. STRAND TAILS AND BE COMPLETELY FILLED WITH GROUT. END CAP VENTS SHALL BE CUT OFF AND THE EXPOSED GROUT THOROUGHLY COATED WITH AN ELASTOMERIC MEMBRANE PRIOR TO POURING THE BLOCK OR POUR BACK. PERMANENT ANCHORAGE END CAPS SHALL BE FASTENED WITH A MINIMUM OF THREE STAINLESS STEEL BOLTS IN A TRIANGULAR PATTERN. ALL BOLT HOLES (3 MIN.) FOR SUPPLIED ANCHORAGES SHALL BE UTILIZED.

⑥ ALL HOLES FOR THE #3 BARS SHALL BE DRILLED PRIOR TO STRESSING ANY TENDONS. DRILLED HOLES SHALL CLEAR LOCAL ZONE REINFORCING BY AT LEAST 1". THE BARS SHALL BE EPOXIED INTO THE HOLES USING AN EPOXY APPROVED BY THE ENGINEER AND USED IN STRICT ACCORDANCE WITH THE MANUFACTURER'S RECOMMENDATIONS. THE ANNULAR SPACE BETWEEN THE BARS AND THE HOLE SHALL BE COMPLETELY FILLED WITH NO VOIDS.

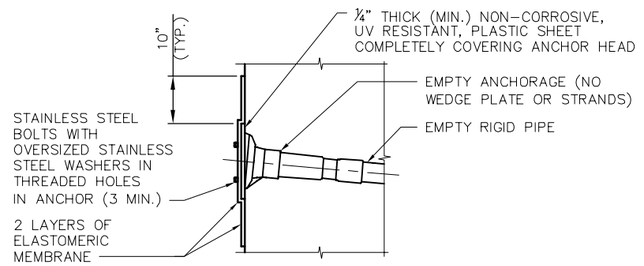

FUTURE TENDON ANCHORAGE PROTECTION DETAIL

(VALID FOR FUTURE POST–TENSIONING ANCHORS ANCHORING ON THE FACE OF THE END DIAPHRAGMS)

NO.	DATE	BY	CHECK	DESIGN	REVISION / SUBMITTAL

DESIGNED BY: JWJ CHECKED BY: ETN
DRAWN BY: TMW CHECKED BY: ETN

AECOM

90% SUBMISSION - 01/22/16

METROPOLITAN COUNCIL

SOUTHWEST Green Line LRT

CIVIL - VOLUME 4D
EXCELSIOR BLVD
BRIDGE 27C10
P.T. GROUTING & PROTECTION DETAILS 1

DISCIPLINE: STRUCTURE
SHEET NAME: CBR27C10-BRG-SUP-080

SHEET 136 OF 174

Jan, 18 2016 08:47 am \\Mndtc2fp001\SWLRT\3400_ADC\CAD\SEGMENT E1\PLAN SHEETS\STRUCTURES\CBR27C10\CBR27C10-BRG-SUP-079.dwg By: WaltzT

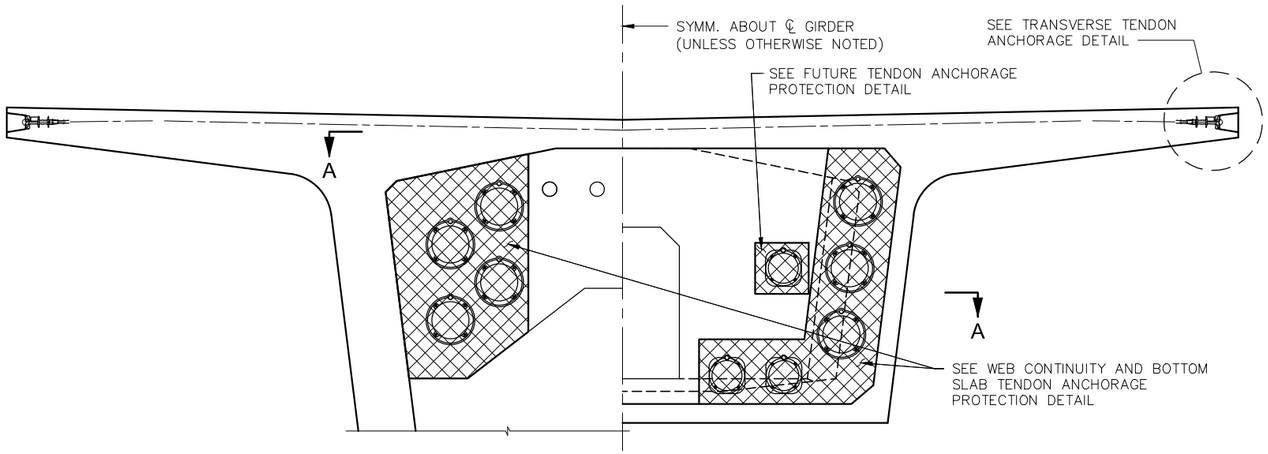

HALF CROSS SECTION
PIER TABLE

HALF CROSS SECTION
END DIAPHRAGM AT EXPANSION JOINT FACE

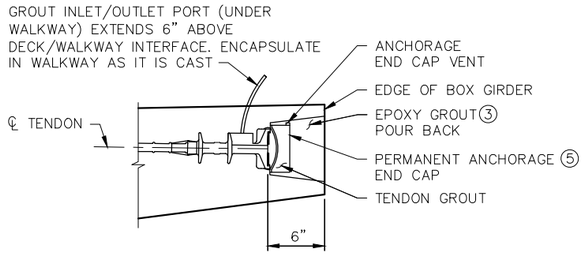

TRANSVERSE TENDON ANCHORAGE DETAIL

TRANSVERSE TENDON NOTES:

DIMENSIONS SHOWN FOR ANCHORAGE RECESS MAY VARY DEPENDING UPON THE POST-TENSIONING SYSTEM USED.

PERMANENT PLASTIC END CAPS SHALL BE USED AT ANCHORAGS, END CAPS SHALL BE FILLED WITH GROUT DURING TENDON GROUTING.

INTENTIONALLY ROUGHEN ANCHORAGE BLOCKOUT TO AN AMPLITUDE OF 1/4". BLOCKOUT SHALL BE FILLED WITH NON-SHRINK EPOXY GROUT AND FINISHED TO MEET LINES OF THE STRUCTURAL ELEMENT.

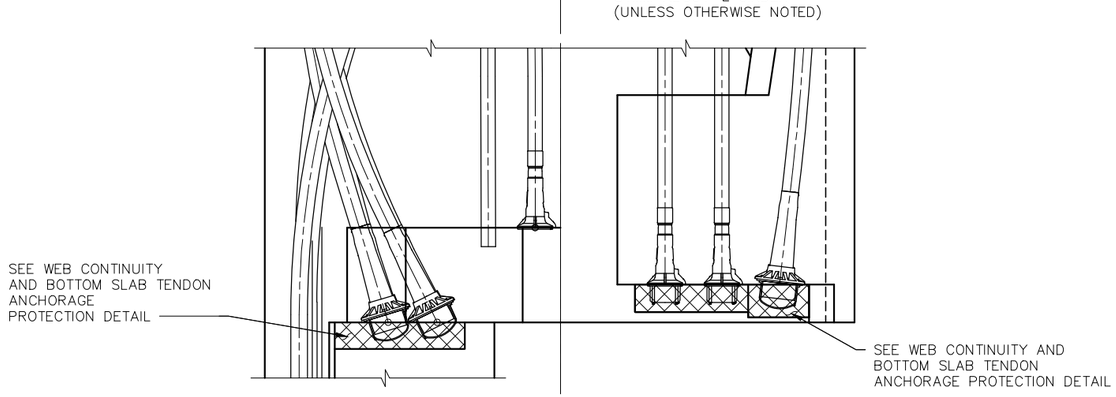

PIER TABLE

END DIAPHRAGM

SECTION A-A

NOTES:

WORK THIS SHEET WITH "P.T. GROUTING AND PROTECTION DETAILS 1" SHEET.

NO.	DATE	BY	CHECK	DESIGN	REVISION / SUBMITTAL

DESIGNED BY: JWJ | CHECKED BY: ETN
DRAWN BY: TMW | CHECKED BY: ETN

AECOM

90% SUBMISSION - 01/22/16

METROPOLITAN COUNCIL

SOUTHWEST Green Line LRT Extension

CIVIL - VOLUME 4D
EXCELSIOR BLVD
BRIDGE 27C10
P.T. GROUTING & PROTECTION DETAILS 2

DISCIPLINE: STRUCTURE
SHEET NAME: CBR27C10-BRG-SUP-081

SHEET 137 OF 174

Jan, 18 2016 03:46 pm C:\Users\Hodgesj\appdata\local\temp\AcPublish_7448\CBR27C10-BRG-SUP-081.dwg By: hodgesj

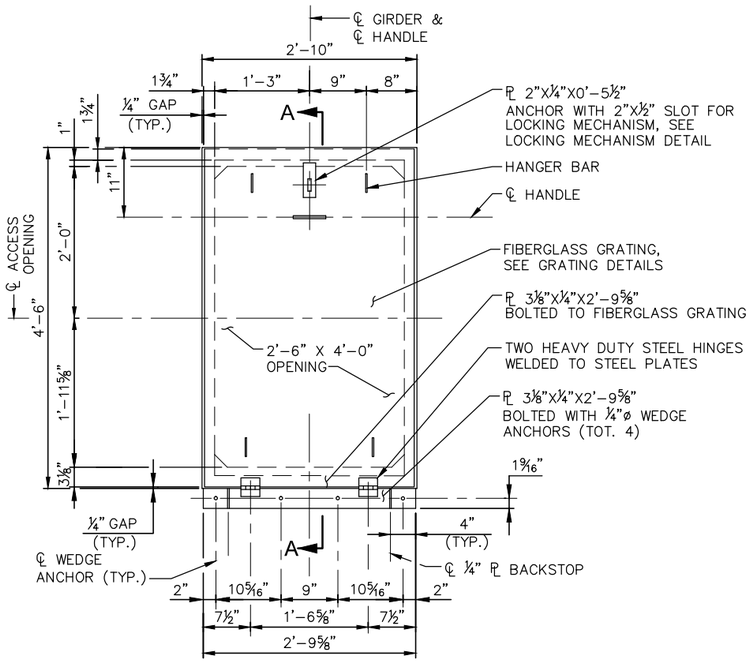

PLAN - ACCESS HOLE HATCH DOOR

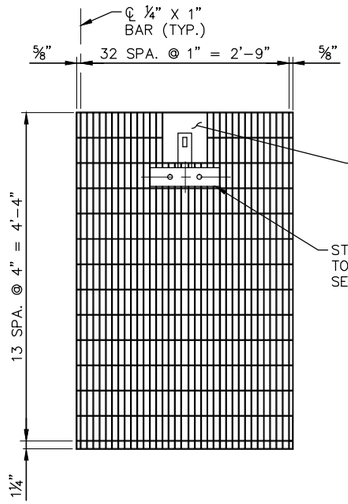

GRATING DETAIL - INSIDE FACE

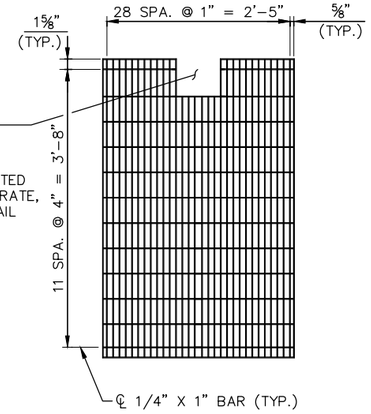

GRATING DETAIL - OUTSIDE FACE

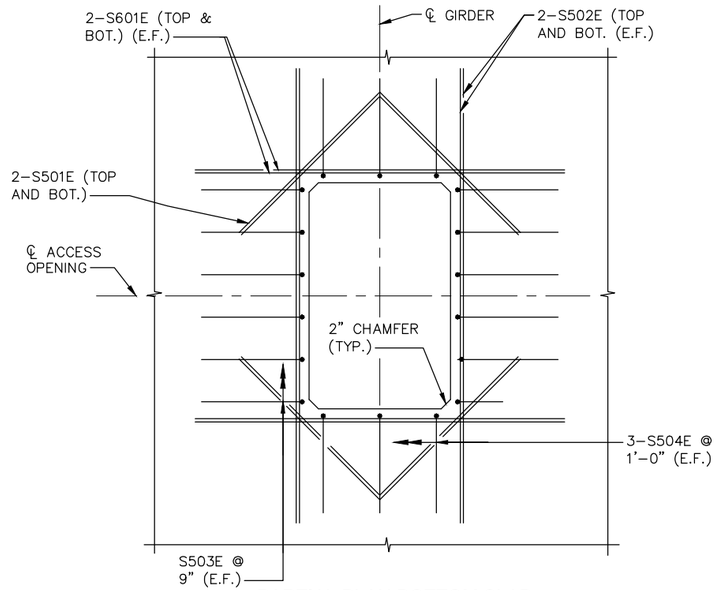

PARTIAL PLAN BOTTOM SLAB
ACCESS HOLE REINFORCING

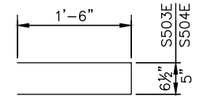

S503E, S504E

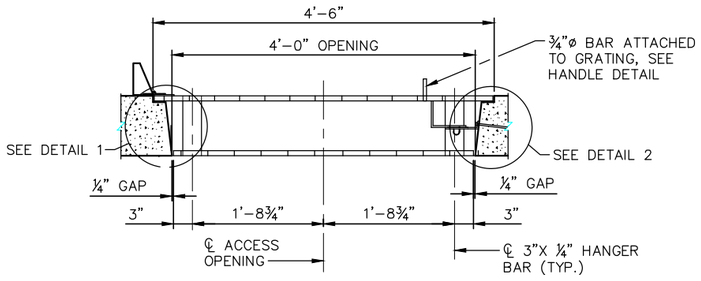

SECTION A-A

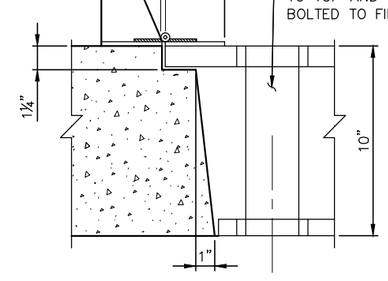

DETAIL 1

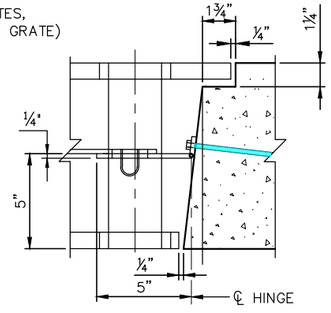

DETAIL 2

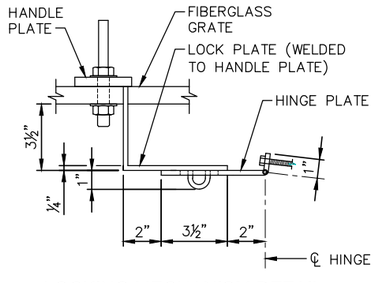

LOCKING MECHANISM DETAIL

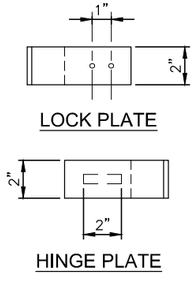

LOCKING MECHANISM
DETAIL NOTES:

HINGE PLATE TO BE HINGED ALONG CONCRETE FACE AS SHOWN.

¼" DIA. STEEL U–BEND TO BE WELDED TO L–BRACKET LOCK PLATE AS SHOWN.

HANDLE DETAIL NOTES:

BOLT HANDLE TO FIBERGLASS GRATE WITH 9⁄16"ø BOLTS (TOT. 2) WITH NUTS AND LOCK WASHERS.

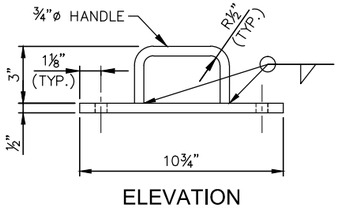

ELEVATION

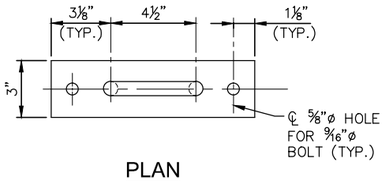

PLAN

HANDLE DETAIL

BILL OF REINFORCEMENT (ONE ACCESS HOLE)				
BAR	NO.	LENGTH	SHAPE	LOCATION
S501E	16	3'–6"	STR.	ACCESS HOLE
S502E	8	8'–0"	STR.	ACCESS HOLE
S503E	12	3'–6½"	⊐	ACCESS HOLE
S504E	6	3'–5"	⊐	ACCESS HOLE
S601E	8	6'–6"	STR.	ACCESS HOLE

NOTES:

FOR LOCATION OF ACCESS OPENINGS, SEE "SPANS 1 & 5 C.I.P. FRAMING PLAN" SHEET.

CUT AND ADJUST TYPICAL REINFORCEMENT IN BOTTOM SLAB OF SEGMENT TO PROVIDE 2" CLEAR AROUND ACCESS HOLE.

FIBERGLASS GRATING MANUFACTURER TO BE SELECTED BY THE CONTRACTOR. CONTRACTOR SHALL SUBMIT SHOP DRAWINGS OF THE ACCESS DOOR TO THE ENGINEER FOR APPROVAL.

ALL STEEL ELEMENTS SHALL BE HOT–DIPPED GALVANIZED IN ACCORDANCE WITH MnDOT SPEC. 3394.

ALL HATCHES TO BE SECURED THROUGH U–CLAMP BY A HEAVY–DUTY PADLOCK. KEYS ARE TO BE FURNISHED TO THE OWNER UPON ACCEPTANCE OF THE PROJECT.

(E.F.) DENOTES EACH FACE.

NO.	DATE	BY	CHECK	DESIGN	REVISION / SUBMITTAL

DESIGNED BY: ETN CHECKED BY: JWJ
DRAWN BY: TMW CHECKED BY: JWJ

AECOM

90% SUBMISSION - 01/22/16

METROPOLITAN COUNCIL

SOUTHWEST Green Line LRT Extension

CIVIL - VOLUME 4D
EXCELSIOR BLVD
BRIDGE 27C10
MISC. SUPERSTRUCTURE DETAILS 1

DISCIPLINE: STRUCTURE

SHEET NAME: CBR27C10-BRG-SUP-082

SHEET 138 OF 174

Jan, 18 2016 03:47 pm C:\Users\HodgesJ\appdata\local\temp\AcPublish_7448\CBR27C10-BRG-SUP-082.dwg By: hodgesj

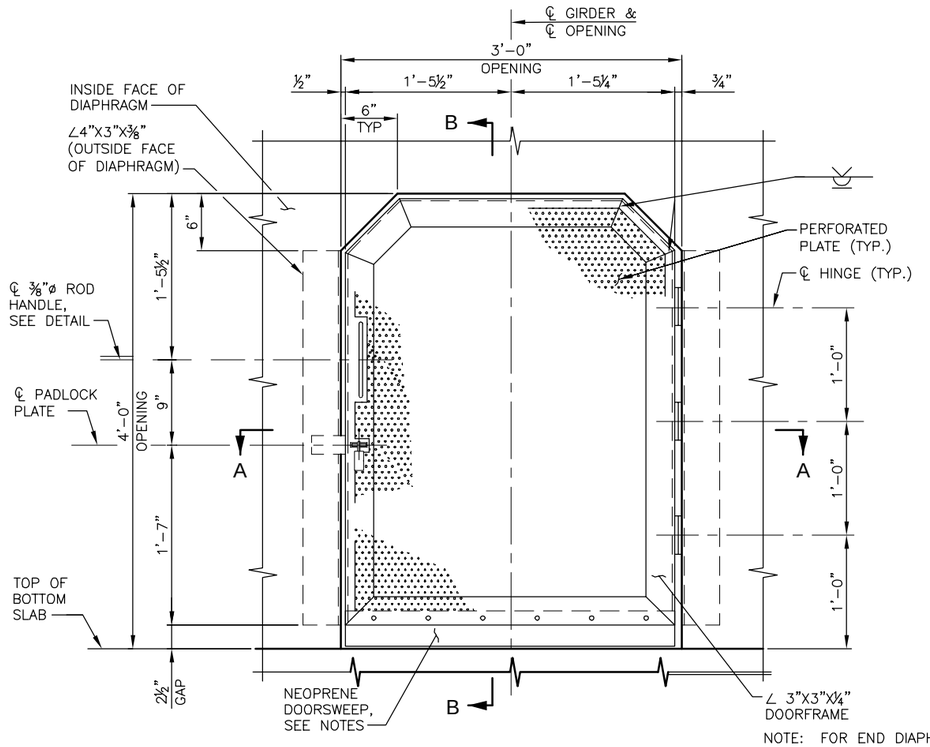

ACCESS OPENING DOOR DETAIL

NOTE: FOR END DIAPHRAGM AND ACCESS OPENING DETAILS, SEE "END DIAPHRAGM DETAIL 1" SHEET.

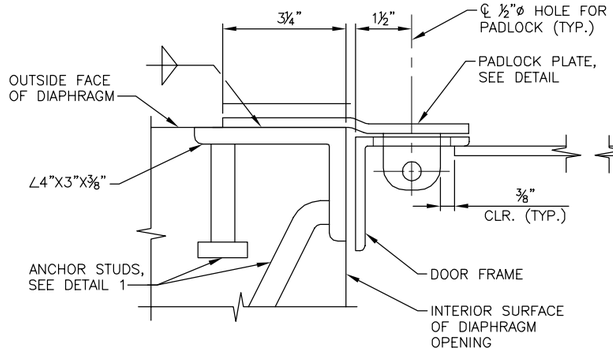

AT PADLOCK

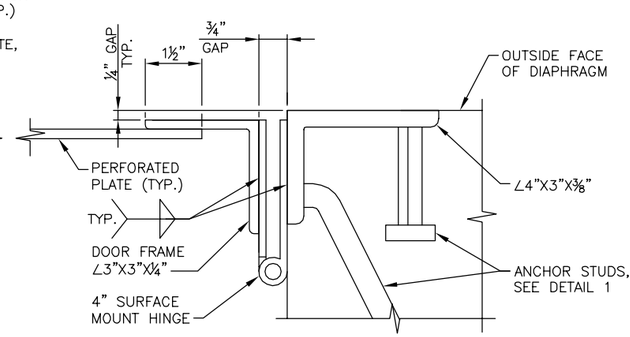

AT HINGE

SECTION A-A

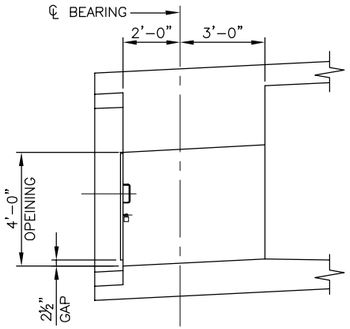

SECTION B-B

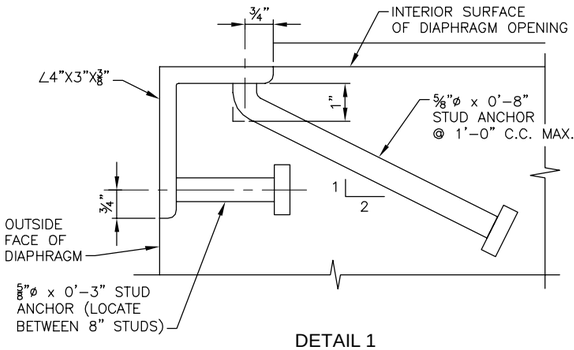

DETAIL 1

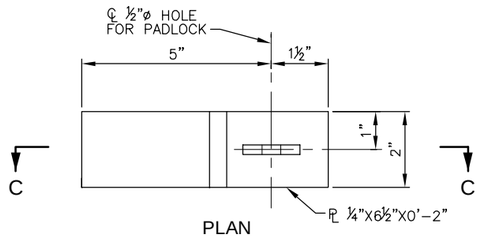

PLAN

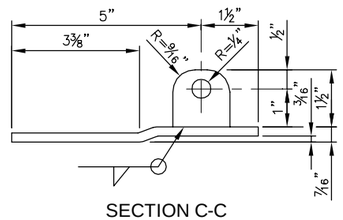

SECTION C-C

PADLOCK PLATE DETAIL

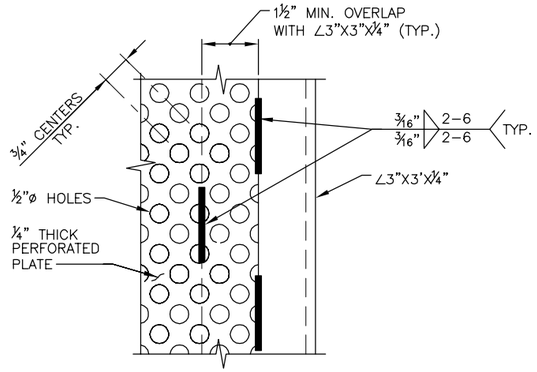

PERFORATED PLATE DETAIL

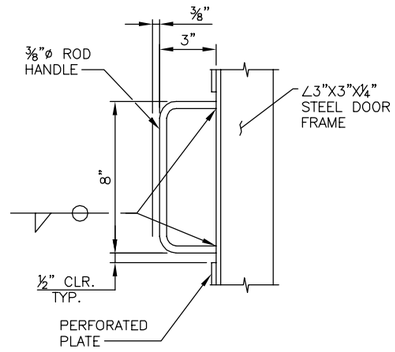

HANDLE DETAIL

NOTES:

FIELD MEASURE AND VERIFY ALL DIMENSIONS PRIOR TO FABRICATION OF BRIDGE SCREEN AND DOOR FRAMES. HOT–DIP GALVANIZE ALL SCREEN THAT IS NOT STAINLESS STEEL AFTER FABRICATION PER MnDOT SPECIFICATIONS 3394. TOUCH UP GALVANIZATION AFTER WELDING PER MnDOT SPECIFICATION.

WELDING ELECTRODES SHALL BE E70XX, WELDING SHALL BE IN ACCORDANCE WITH AWS D1.1 LATEST EDITION.

ALL ANGLES AND PLATES SHALL BE A36 GALVANIZED OR BETTER.
ANY MODIFICATIONS TO THE PLANS BY THE CONTRACTOR SHALL BE APPROVED BY THE ENGINEER.

PERFORATED PLATE SHALL BE ¼" THICK WITH ½" DIAMETER HOLES STAGGERED ON ¾" CENTERS.

WELD PERFORATED PLATE TO DOOR FRAME. PERFORATED PLATE SHALL OVERLAP WITH DOOR FRAME WITH 1½" OVERLAP (MIN.).

LOCKS FOR THE ACCESS HATCHES AND ACCESS DOORS SHALL BE KEYED ALIKE AND KEYS SHALL BE FURNISHED TO THE OWNER UPON ACCEPTANCE OF THE JOB.

INSTALL NEOPRENE DOORSWEEP TO SEAL GAP AT BOTTOM OF DOOR. PREDRILLED WITH 6–#10 SELF–TAPPING SCREWS AND WASHERS. GRIND PROTRUDING END OF SCREWS.

NO.	DATE	BY	CHECK	DESIGN	REVISION / SUBMITTAL

DESIGNED BY: JWJ | CHECKED BY: ETN
DRAWN BY: TMW | CHECKED BY: ETN

AECOM

90% SUBMISSION - 01/22/16

METROPOLITAN COUNCIL

SOUTHWEST Green Line LRT

CIVIL - VOLUME 4D
EXCELSIOR BLVD
BRIDGE 27C10
MISC. SUPERSTRUCTURE DETAILS 2

DISCIPLINE: STRUCTURE
SHEET NAME: CBR27C10-BRG-SUP-083

SHEET 139 OF 174

Jan. 18 2016 10:03 am \\Mndtc2fp001\swlrt\3400_ADC\CAD\SEGMENT E1\PLAN SHEETS\STRUCTURES\CBR27C10\CBR27C10_CBR-SUP-083.dwg By: WaltzT

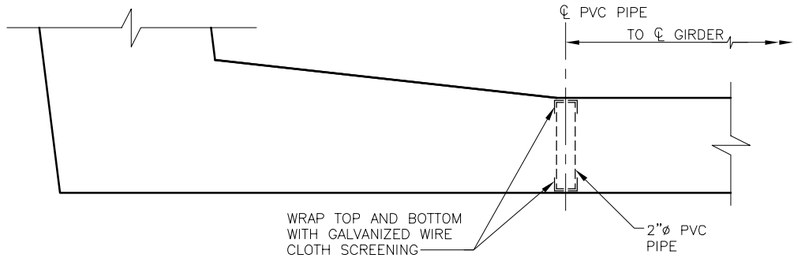

VENT HOLE DETAIL

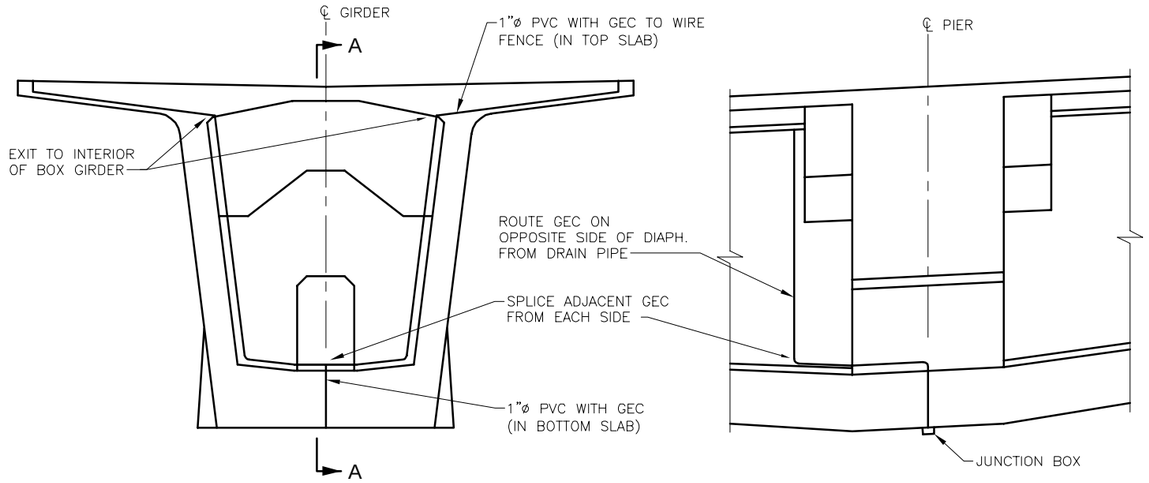

CROSS SECTION

SECTION A-A

GEC ROUTING AT PIERS
(SEE FENCE GROUNDING PLANS IN CIVIL VOLUME 12 FOR DETAILS)

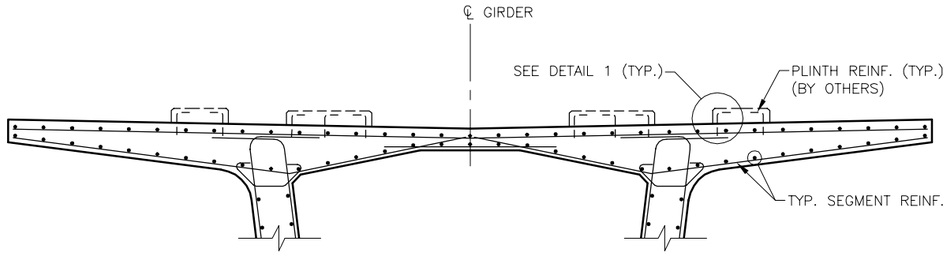

PARTIAL CROSS SECTION

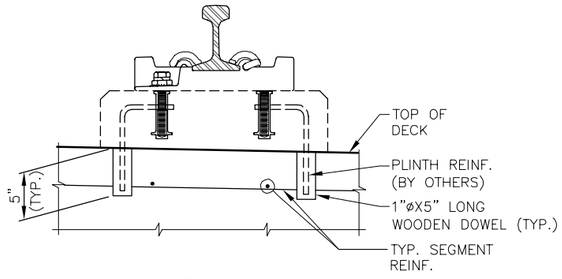

DETAIL 1

PLINTH REINF. DETAIL

NOTES:

CONTRACTOR SHALL LOCATE ALL PLINTH DOWEL REINF. AND ADJUST IF REQUIRED TO AVOID CONFLICT WITH SEGMENT REINF. OR POST-TENSIONING. SEE DIRECT FIXATION PLINTH DETAILS IN CIVIL VOLUME 4 FOR PLINTH REINF. DETAILS.

WOODEN DOWELS SHALL BE PLACED AT LOCATIONS OF PLINTH DOWEL REINF. PRIOR TO PLACEMENT OF CONCRETE.

WOOD DOWELS SHALL BE DRILLED OUT BY OTHERS FOR PLACEMENT OF PLINTH REINF.

NO.	DATE	BY	CHECK	DESIGN	REVISION / SUBMITTAL

DESIGNED BY: ETN | CHECKED BY: JWJ
DRAWN BY: TMW | CHECKED BY: JWJ

AECOM

90% SUBMISSION - 01/22/16

METROPOLITAN COUNCIL

SOUTHWEST Green Line LRT

CIVIL - VOLUME 4D
EXCELSIOR BLVD
BRIDGE 27C10
MISC. SUPERSTRUCTURE DETAILS 3

DISCIPLINE: STRUCTURE

SHEET NAME: CBR27C10-BRG-SUP-084

SHEET 140 OF 174

Jan. 15 2016 04:15 pm \\Mndtc2fp001\swlrt\3400_ADC\CAD\SEGMENT E1\PLAN SHEETS\STRUCTURES\CBR27C10\CBR27C10-BRG-SUP-084.dwg By: WaltzT

GENERAL CONSTRUCTION NOTES

THE INFORMATION SHOWN IN THESE NOTES AND FOLLOWING SUPERSTRUCTURE CONSTRUCTION SCHEME DRAWINGS IS NOT REPRESENTED AS BEING THE COMPLETE STEP-BY-STEP CONSTRUCTION PROCEDURE AND IS INCLUDED FOR INFORMATION ONLY TO CONVEY THE ASSUMPTIONS MADE BY THE DESIGNER IN DESIGNING THE STRUCTURE. THE CONTRACTOR IS RESPONSIBLE TO DETERMINE THE COMPLETE ERECTION SEQUENCE AND FOR SELECTING THE MEANS AND METHODS USED TO CONSTRUCT THE STRUCTURE.

WHETHER THE CONTRACTOR PROPOSES AN ALTERNATE SEQUENCE OR ONE SIMILAR TO THAT SHOWN ON THESE DRAWINGS, THE CONTRACTOR SHALL PREPARE A DETAILED ERECTION SEQUENCE, INCLUDING CALCULATIONS AND DETAILED DRAWINGS TO BE SUBMITTED TO THE ENGINEER FOR REVIEW AND APPROVAL IN ACCORDANCE WITH THE PROJECT SPECIAL PROVISIONS.

THE CONTRACTOR SHALL BE RESPONSIBLE FOR THE ERECTION SEQUENCE IN ITS ENTIRETY AND FOR VERIFYING THE ADEQUACY OF THE STRUCTURE FOR THEIR SELECTED CONSTRUCTION SEQUENCE AND MEANS AND METHODS. CONTRACTOR SHALL ALSO BE RESPONSIBLE FOR PROVIDING ANY ADDITIONAL REINFORCING AND/OR OTHER MODIFICATIONS TO THE STRUCTURE REQUIRED FOR ACCOMMODATING THEIR MEANS AND METHODS. CONTRACTOR'S BID SHALL BE BASED SOLELY UPON THE ERECTION SEQUENCE PROPOSED BY THE CONTRACTOR AND SHALL BE INCLUSIVE OF ANY ADDITIONAL REINFORCING AND/OR OTHER MODIFICATIONS NEEDED TO ACCOMMODATE THE CONTRACTOR'S SELECTED MEANS AND METHODS.

THE DESIGN OF THE TEMPORARY WORKS AND THE STABILITY OF THE STRUCTURE DURING ALL PHASES OF CONSTRUCTION IS THE RESPONSIBILITY OF THE CONTRACTOR. DESIGN OF TEMPORARY WORKS SHALL BE IN CONFORMANCE WITH AASHTO AND THE REQUIREMENTS OF THE PROJECT SPECIAL PROVISIONS.

THE PERMANENT BRIDGE PIERS AND FOUNDATIONS HAVE NOT BEEN DESIGNED TO RESIST THE OUT-OF-BALANCE LOADS DURING CANTILEVER CONSTRUCTION. THEREFORE, A STABILITY PROP(S) AND COUNTERWEIGHT(S) ARE REQUIRED TO MAINTAIN STABILITY OF THE CANTILEVERS DURING CONSTRUCTION AS DEPICTED IN THESE DRAWINGS. THE CONTRACTOR IS RESPONSIBLE FOR DETERMINING THE LOCATION AND LOADS ACTING ON THE PROP(S) BASED ON THEIR SELECTED MEANS AND METHODS, FOR THE DESIGN OF THE PROP(S) AND FOUNDATION(S), FOR ANY ADDITIONAL REINFORCING NEEDED IN THE SUPERSTRUCTURE AT THE PROP(S) LOCATION(S), AND FOR ALL OTHER DETAILS ASSOCIATED WITH USE OF THE PROP(S) IN CONSTRUCTION. IN ADDITION, THE CONTRACTOR IS RESPONSIBLE FOR DETERMINING THE SIZE AND LOCATION(S) OF ANY COUNTERWEIGHT REQUIREMENTS BASED ON THEIR SELECTED MEANS AND METHODS AT ALL STAGES AND PHASES OF CONSTRUCTION.

THE ASSUMED CONSTRUCTION SEQUENCE SHOWN IN THESE SUPERSTRUCTURE CONSTRUCTION SCHEME DRAWINGS SHOWS THE CONSTRUCTION OF THE CANTILEVERS PROGRESSING IN A LINEAR FASHION SO THAT A SINGLE PAIR OF FORM TRAVELERS MAY BE USED. CAST-IN-PLACE FALSEWORK SECTIONS IN SPANS 1 & 5 MAY BE CONSTRUCTED SIMULTANEOUSLY. IF THE CONTRACTOR CHOOSES TO USE TWO PAIRS OF FORM TRAVELERS, CONSTRUCTION OF CANTILEVERS 1 & 4 AND CANTILEVERS 2 & 3 MAY PROGRESS SIMULTANEOUSLY. THE CLOSURE JOINT SEGMENT IN ALL SIDE SPANS MUST BE PLACED PRIOR TO POURING THE MAIN SPAN CLOSURE IN SPAN 3 IN ACCORDANCE WITH THESE DRAWINGS. CLOSURE SEQUENCE AS ASSUMED IN DESIGN: SPAN 1, SPAN 2, SPAN 5, SPAN 4, & SPAN 3.

POST-TENSIONING TENDONS SHALL BE STRESSED IN THE SEQUENCE AND CONSTRUCTION STEP SHOWN IN THESE SUPERSTRUCTURE CONSTRUCTION SCHEME DRAWINGS. CONTRACTOR SHALL STRESS EACH PAIR OF TENDONS TO EITHER SIDE OF THE CENTERLINE GIRDER PRIOR TO MOVING TO THE NEXT PAIR OF TENDONS. FOR EXAMPLE, TENDONS W 1-01 (LEFT) AND W 1-01 (RIGHT) SHALL BE STRESSED PRIOR TO STRESSING TENDONS W 1-02, WHERE LEFT AND RIGHT DENOTE THE TENDONS TO EITHER SIDE OF THE CENTERLINE GIRDER LOOKING UPSTATION. TENDON STRESSING SHALL OCCUR IN A BALANCED FASHION ABOUT THE CENTERLINE OF GIRDER, NEVER HAVING MORE THAN ONE STRESSED TENDON OUT OF BALANCE.

IN THE FINAL CONFIGURATION, PERMANENT BEARINGS AT PIERS 1, 3, & 4 ALLOW LONGITUDINAL TRANSLATION OF THE SUPERSTRUCTURE. THEREFORE, DURING CONSTRUCTION THESE BEARINGS MUST BE TEMPORARILY FIXED TO PREVENT TRANSLATION DURING CANTILEVER CONSTRUCTION, THE CONTRACTOR SHALL BE RESPONSIBLE FOR DETERMINING THE METHOD BY WHICH THE BEARINGS WILL BE TEMPORARILY FIXED AND SHALL SUBMIT DETAILS TO THE ENGINEER FOR REVIEW AND APPROVAL.

TEMPORARY VERTICAL CLEARANCE OF 14'-6" OVER EXCELSIOR BOULEVARD DURING CONSTRUCTION WITH THE FORM TRAVELER SHALL BE MET. FORM TRAVELER DESIGN SHALL PROVIDE AT LEAST THIS MINIMUM TEMPORARY VERTICAL CLEARANCE OR CONTRACTOR SHALL DEVELOP A TRAFFIC CONTROL PLAN TO BE SUBMITTED TO THE ENGINEER FOR REVIEW AND APPROVAL SUCH THAT NO MORE THAN ONE PARTIAL LANE CLOSURE IN EACH DIRECTION OF TRAFFIC IS REQUIRED DURING CONSTRUCTION.

CANADIAN PACIFIC FREIGHT RAIL TRAFFIC IS TO BE DIVERTED ON TO TEMPORARY CP BASS LAKE SPUR SHOOFLY TRACK DURING ENTIRE CONSTRUCTION OF BRIDGE. PERMANENT CP BASS LAKE SPUR TRACK IS NOT TO BE PLACED UNTIL AFTER CONSTRUCTION OF BRIDGE IS COMPLETED. SEE CIVIL PLANS AND PROJECT SPECIAL PROVISIONS FOR OVERALL PROJECT STAGING REQUIREMENTS AND FOR ADDITIONAL INFORMATION RELATED TO CONSTRUCTION NEAR RAILROAD TRACKS.

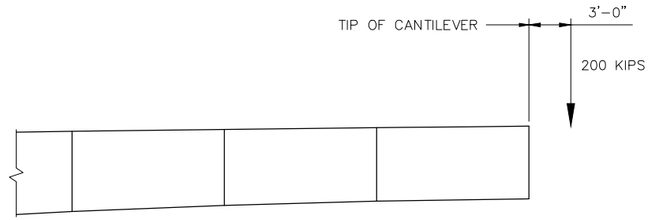

ASSUMED FORM TRAVELER LOAD DURING CONSTRUCTION

(FORM TRAVELER ONLY, DOES NOT INCLUDE WET CONCRETE WEIGHT)

Jan, 14 2016 05:41 pm V:\3400_ADC\CAD\SEGMENT E1\PLAN SHEETS\STRUCTURES\CBR27C10\CBR27C10-BRG-SUP-085.dwg By: songers

NO.	DATE	BY	CHECK	DESIGN	REVISION / SUBMITTAL

DESIGNED BY: ETN CHECKED BY: JWJ
DRAWN BY: LSS CHECKED BY: JWJ

AECOM

90% SUBMISSION - 01/22/16

METROPOLITAN COUNCIL

SOUTHWEST Green Line LRT Extension

CIVIL - VOLUME 4D
EXCELSIOR BLVD
BRIDGE 27C10
SUPERSTRUCTURE CONST. SCHEME 1

DISCIPLINE: STRUCTURE
SHEET NAME: CBR27C10-BRG-SUP-085

SHEET 141 OF 174

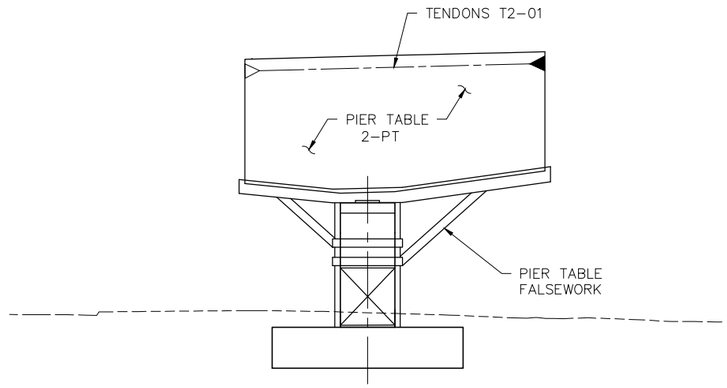

STEP 1

1. CONSTRUCT PERMANENT PIER WITH PERMANENT BEARINGS AND TEMPORARY STABILITY PROP(S) WITH TEMPORARY BEARINGS. LOCK SUPERSTRUCTURE TO SUBSTRUCTURE AT PERMANENT BEARINGS FOR TRANSLATION (REQUIRED AT PIERS 1, 3, AND 4).
2. CONSTRUCT THE PIER TABLE ON FALSEWORK.
3. AFTER PIER TABLE ACHIEVES A MINIMUM CONCRETE COMPRESSIVE STRENGTH OF 4000 PSI, STRESS TRANSVERSE POST-TENSIONING TENDONS IN PIER TABLE FOLLOWED BY CANTILEVER TENDONS T 2-01.
4. REMOVE PIER TABLE FALSEWORK.

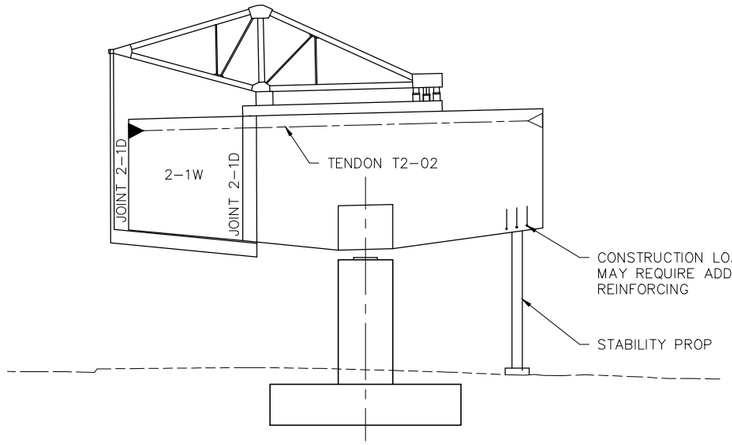

STEP 2

1. ERECT FIRST FORM TRAVELER.
2. CAST SEGMENT 2-1W.
3. AFTER SEGMENT 2-1W ACHIEVES A MINIMUM CONCRETE COMPRESSIVE STRENGTH OF 4000 PSI, STRESS TRANSVERSE POST-TENSIONING TENDONS FOLLOWED BY CANTILEVER TENDONS T 2-02.
4. ADVANCE FORM TRAVELER INTO POSITION TO CAST SEGMENT 2-2W.

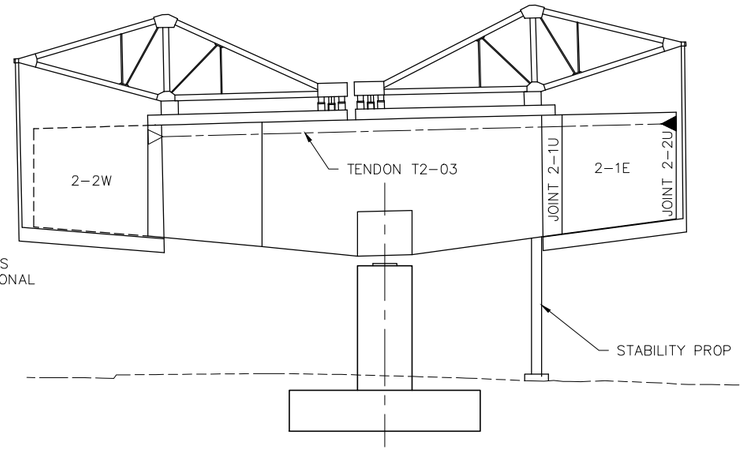

STEP 3

1. ERECT SECOND FORM TRAVELER.
2. CAST SEGMENT 2-1E.
3. AFTER SEGMENT 2-1E ACHIEVES A MINIMUM CONCRETE COMPRESSIVE STRENGTH OF 4000 PSI, STRESS TRANSVERSE POST-TENSIONING TENDONS FOLLOWED BY CANTILEVER TENDONS T 2-03.
4. ADVANCE FORM TRAVELER INTO POSITION TO CAST SEGMENT 2-2E.

STEP 4

1. CONTINUE CASTING SEGMENT PAIRS ALWAYS CASTING THE SEGMENT ON THE SHORTER SIDE OF THE PIER TABLE FIRST SUCH THAT THE CANTILEVER IS NEVER MORE THAN ONE-HALF OF A SEGMENT OUT OF BALANCE. CANTILEVER TENDONS ARE STRESSED IN SEQUENCE AS CASTING PROCEEDS OUTWARD.
2. PLACE TEMPORARY COUNTERWEIGHT(S) ON SIDE OF STABILITY PROP(S) AND ADVANCE WITH FORM TRAVELER AS CASTING PROCEEDS. IN DESIGN, ASSUMED 45 TON COUNTERWEIGHT PLACED IN THIRD SEGMENT BACK FROM LEADING EDGE OF ERECTION INITIALLY PLACED PRIOR TO CASTING SEGMENT 2-3E.

NOTES

THIS DRAWING IS A SCHEMATIC FOR CAST-IN-PLACE SEGMENTAL CONSTRUCTION OF THE CANTILEVERS (CANTILEVER 2 SHOWN, OTHERS SIMILAR). SEE "SUPERSTRUCTURE CONST. SCHEME 3 & 4" SHEETS FOR ADDITIONAL INFORMATION ON THE OVERALL CONSTRUCTION SEQUENCE.

UNLESS NOTED OTHERWISE, CONCRETE SHALL ACHIEVE A MINIMUM COMPRESSIVE STRENGTH OF 4000 PSI PRIOR TO STRESSING ANY POST-TENSIONING ANCHORING IN THAT ELEMENT OR SEGMENT. THE TRANSVERSE TENDONS IN A SEGMENT SHALL BE STRESSED FIRST, FOLLOWED BY THE CANTILEVER TENDONS. ALL TENDONS ANCHORING IN A SEGMENT SHALL BE STRESSED PRIOR TO LOWERING THE FORMS AND ADVANCING THE FORM TRAVELER.

FOR ADDITIONAL INFORMATION, SEE "SUPERSTRUCTURE CONST. SCHEME 1" SHEET.

NO.	DATE	BY	CHECK	DESIGN	REVISION / SUBMITTAL

DESIGNED BY: ETN | CHECKED BY: JWJ
DRAWN BY: LSS | CHECKED BY: JWJ

AECOM

90% SUBMISSION - 01/22/16

METROPOLITAN COUNCIL

SOUTHWEST Green Line LRT Extension

CIVIL - VOLUME 4D
EXCELSIOR BLVD
BRIDGE 27C10
SUPERSTRUCTURE CONST. SCHEME 2

DISCIPLINE: STRUCTURE
SHEET NAME: CBR27C10-BRG-SUP-086

SHEET 142 OF 174

Jan, 14 2016 05:41 pm V:\3400_ADC\CAD\SEGMENT E1\PLAN SHEETS\STRUCTURES\CBR27C10\CBR27C10-BRG-SUP-085.dwg By: songers

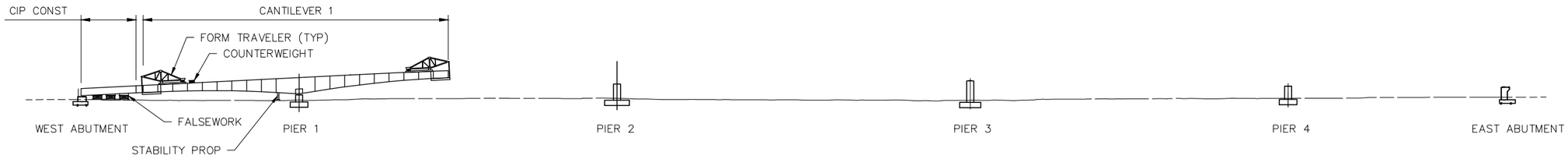

MAX. REACTION AT TOP OF STABILITY PROP (KIPS)		
	COMPRESSION	TENSION
UNFACTORED WORKING LOAD	−1240	545
FACTORED EXTREME CASE DUE TO LOSS OF TRAVELER (WITH IMPACT)	−4225	3145

PHASE 1

PHASE 1

1. CONSTRUCT WEST & EAST ABUTMENTS TO BASE OF BACKWALL AND PIERS 1 THRU 4.
2. CONSTRUCT CANTILEVER 1 PER SEQUENCE GIVEN ON "SUPERSTRUCTURE CONST. SCHEME 2" SHEET. TEMPORARILY LOCK SUPERSTRUCTURE TO SUBSTRUCTURE AT PERMANENT BEARINGS FOR TRANSLATION AT PIER 1.
3. CONSTRUCT C.I.P. PORTION OF SPAN 1 ON FALSEWORK. STRESS TRANSVERSE TENDONS IN C.I.P. PORTION AFTER CONCRETE ACHIEVES A MINIMUM COMPRESSIVE STRENGTH OF 4000 PSI.
4. AFTER CASTING SEGMENT 1−9E AND STRESSING CANTILEVER TENDONS T 1−18, THE UPSTATION FORM TRAVELER IS NOT ADVANCED TO THE NEXT POSITION BUT SHALL REMAIN IN PLACE UNTIL STEP 8 BELOW.
5. AFTER CASTING SEGMENT 1−9W AND STRESSING CANTILEVER TENDONS T 1−19, THE DOWNSTATION FORM TRAVELER IS ADVANCED AND USED TO ALIGN THE CANTILEVER TIP AND CAST THE SPAN 1 CLOSURE SEGMENT 1−CS. REMOVE COUNTERWEIGHT(S) AND JACK UP ON FORM TRAVELER (REACTS DOWN ON C.I.P. FALSEWORK) TO ALIGN THE CANTILEVER TIP (IF REQUIRED). MAGNITUDE OF FORCE TO ALIGN CANTILEVER IS DEPENDENT UPON THE DEGREE OF MISALIGNMENT (230 KIPS ASSUMED IN DESIGN).
6. AFTER CLOSURE SEGMENT ACHIEVES A MINIMUM CONCRETE COMPRESSIVE STRENGTH OF 1500 PSI AND NOT MORE THAN 8 HOURS AFTER POURING CONCRETE, STRESS WEB CONTINUITY TENDONS W 1−01.
7. AFTER CLOSURE SEGMENT ACHIEVES A MINIMUM CONCRETE COMPRESSIVE STRENGTH OF 2500 PSI, STRESS REMAINING WEB CONTINUITY TENDONS W 1−02 & W 1−03 IN ORDER. FORM TRAVELER ALIGNMENT FORCE MAY NOW BE REMOVED.
8. AFTER CLOSURE SEGMENT ACHIEVES A MINIMUM CONCRETE COMPRESSIVE STRENGTH OF 4000 PSI, STRESS TRANSVERSE TENDONS IN CLOSURE SEGMENT. BOTH FORM TRAVELERS AND STABILITY PROP(S) MAY BE REMOVED FROM CANTILEVER 1 AND MOVED TO CANTILEVER 2.
9. AFTER CLOSURE SEGMENT ACHIEVES A MINIMUM CONCRETE COMPRESSIVE STRENGTH OF 7500 PSI, STRESS BOTTOM SLAB CONTINUITY TENDONS B 1−01, B 1−02, B 1−03, B 1−04, & B 1−05 IN ORDER. FALSEWORK MAY BE REMOVED FROM C.I.P. PORTION OF SPAN 1. CONSTRUCT WEST ABUTMENT BACKWALL.

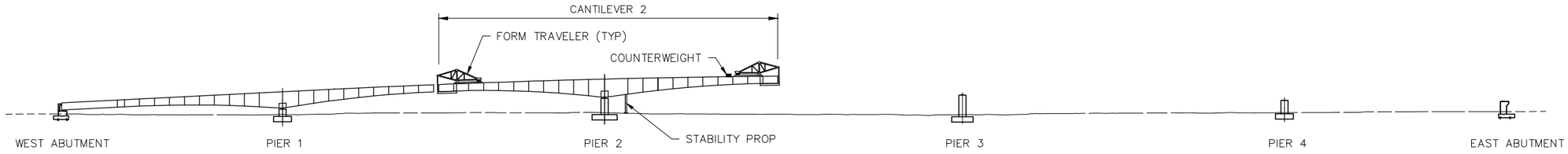

MAX. REACTION AT TOP OF STABILITY PROP (KIPS)		
	COMPRESSION	TENSION
UNFACTORED WORKING LOAD	−1820	375
FACTORED EXTREME CASE DUE TO LOSS OF TRAVELER (WITH IMPACT)	−5165	3040

PHASE 2

PHASE 2

1. CONSTRUCT CANTILEVER 2 PER SEQUENCE GIVEN ON "SUPERSTRUCTURE CONST. SCHEME 2" SHEET. PERMANENT BEARINGS AT PIER 2 ARE FIXED FOR LONGITUDINAL TRANSLATION AND THUS DO NOT NEED TO BE TEMPORARILY LOCKED.
2. AFTER CASTING SEGMENT 2−10E AND STRESSING CANTILEVER TENDONS T 2−21, THE UPSTATION FORM TRAVELER & COUNTERWEIGHT(S) IS NOT ADVANCED TO THE NEXT POSITION BUT SHALL REMAIN IN PLACE UNTIL STEP 6 BELOW. THE DOWNSTATION FORM TRAVELER IS ADVANCED AND USED TO ALIGN THE CANTILEVER TIPS AND CAST THE SPAN 2 CLOSURE SEGMENT 2−CS. JACK DOWN ON FORM TRAVELER (REACTS UP ON CANTILEVER 1 TIP) TO ALIGN THE CANTILEVER TIPS (IF REQUIRED). MAGNITUDE OF FORCE TO ALIGN THE CANTILEVER TIPS IS DEPENDENT UPON THE DEGREE OF MISALIGNMENT (90 KIPS ASSUMED IN DESIGN).
3. AFTER CLOSURE SEGMENT ACHIEVES A MINIMUM CONCRETE COMPRESSIVE STRENGTH OF 1500 PSI AND NOT MORE THAN 8 HOURS AFTER POURING CONCRETE, RELEASE SUPERSTRUCTURE FROM SUBSTRUCTURE TO PERMANENT BEARINGS FOR TRANSLATION AT PIER 1 AND STRESS WEB CONTINUITY TENDONS W 2−01.
4. AFTER CLOSURE SEGMENT ACHIEVES A MINIMUM CONCRETE COMPRESSIVE STRENGTH OF 2500 PSI, STRESS REMAINING WEB CONTINUITY TENDONS W 2−02, W 2−03, & W 2−04 IN ORDER. FORM TRAVELER ALIGNMENT FORCE MAY NOW BE REMOVED.
5. AFTER CLOSURE SEGMENT ACHIEVES A MINIMUM CONCRETE COMPRESSIVE STRENGTH OF 4000 PSI, STRESS TRANSVERSE TENDONS IN CLOSURE SEGMENT.
6. AFTER CLOSURE SEGMENT ACHIEVES A MINIMUM CONCRETE COMPRESSIVE STRENGTH OF 7500 PSI, STRESS BOTTOM SLAB CONTINUITY TENDONS B 2−01, B 2−02, & B 2−03 IN ORDER. BOTH FORM TRAVELERS, COUNTERWEIGHT(S), AND STABILITY PROP(S) MAY BE REMOVED FROM CANTILEVER 2 AND MOVED TO CANTILEVER 4.

NOTES

THIS DRAWING IS A SCHEMATIC FOR THE OVERALL CONSTRUCTION SEQUENCE. FOR A SCHEMATIC OF CAST−IN−PLACE SEGMENTAL CONSTRUCTION OF THE CANTILEVERS, SEE "SUPERSTRUCTURE CONST. SCHEME 2" SHEET.

UNLESS NOTED OTHERWISE, CONCRETE SHALL ACHIEVE A MINIMUM COMPRESSIVE STRENGTH OF 4000 PSI PRIOR TO STRESSING ANY POST−TENSIONING ANCHORING IN THAT ELEMENT OR SEGMENT. THE TRANSVERSE TENDONS IN A SEGMENT SHALL BE STRESSED FIRST, FOLLOWED BY THE CANTILEVER TENDONS. ALL TENDONS ANCHORING IN A SEGMENT SHALL BE STRESSED PRIOR TO LOWERING THE FORMS AND ADVANCING THE FORM TRAVELER.

FOR ADDITIONAL INFORMATION, SEE "SUPERSTRUCTURE CONST. SCHEME 1" SHEET.

NO.	DATE	BY	CHECK	DESIGN	REVISION / SUBMITTAL

DESIGNED BY: ETN CHECKED BY: JWJ
DRAWN BY: LSS CHECKED BY: JWJ

AECOM

90% SUBMISSION - 01/22/16

METROPOLITAN COUNCIL

SOUTHWEST Green Line LRT Extension

CIVIL - VOLUME 4D
EXCELSIOR BLVD
BRIDGE 27C10
SUPERSTRUCTURE CONST. SCHEME 3

DISCIPLINE: STRUCTURE
SHEET NAME: CBR27C10-BRG-SUP-087

SHEET 143 OF 174

Jan. 14 2016 05:41 pm V:\3400_ADC\CAD\SEGMENT E1\PLAN SHEETS\STRUCTURES\CBR27C10\CBR27C10-BRG-SUP-085.dwg By: songers

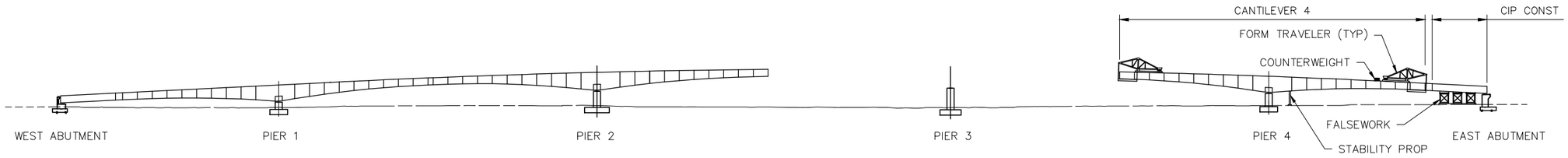

PHASE 3

MAX. REACTION AT TOP OF STABILITY PROP (KIPS)		
	COMPRESSION	TENSION
UNFACTORED WORKING LOAD	−1240	545
FACTORED EXTREME CASE DUE TO LOSS OF TRAVELER (WITH IMPACT)	−4225	3145

PHASE 3

1. CONSTRUCT CANTILEVER 4 PER SEQUENCE GIVEN ON "SUPERSTRUCTURE CONST. SCHEME 2" SHEET. LOCK SUPERSTRUCTURE TO SUBSTRUCTURE AT PERMANENT BEARINGS FOR TRANSLATION AT PIER 4.
2. CONSTRUCT C.I.P. PORTION OF SPAN 5 ON FALSEWORK. STRESS TRANSVERSE TENDONS IN C.I.P. PORTION AFTER CONCRETE ACHIEVES A MINIMUM COMPRESSIVE STRENGTH OF 4000 PSI.
3. AFTER CASTING SEGMENT 4−9W AND STRESSING CANTILEVER TENDONS T 4−18, THE DOWNSTATION FORM TRAVELER IS NOT ADVANCED TO THE NEXT POSITION BUT SHALL REMAIN IN PLACE UNTIL STEP 7 BELOW.
4. AFTER CASTING SEGMENT 4−9E AND STRESSING CANTILEVER TENDONS T 4−19, THE UPSTATION FORM TRAVELER IS ADVANCED AND USED TO ALIGN THE CANTILEVER TIP AND CAST THE SPAN 5 CLOSURE SEGMENT 5−CS. REMOVE COUNTERWEIGHT(S) AND JACK UP ON FORM TRAVELER (REACTS DOWN ON C.I.P. FALSEWORK) TO ALIGN THE CANTILEVER TIP (IF REQUIRED). MAGNITUDE OF FORCE TO ALIGN CANTILEVER IS DEPENDENT UPON THE DEGREE OF MISALIGNMENT (230 KIPS ASSUMED IN DESIGN).
5. AFTER CLOSURE SEGMENT ACHIEVES A MINIMUM CONCRETE COMPRESSIVE STRENGTH OF 1500 PSI AND NOT MORE THAN 8 HOURS AFTER POURING CONCRETE, STRESS WEB CONTINUITY TENDONS W 5−01.
6. AFTER CLOSURE SEGMENT ACHIEVES A MINIMUM CONCRETE COMPRESSIVE STRENGTH OF 2500 PSI, STRESS REMAINING WEB CONTINUITY TENDONS W 5−02 & W 5−03 IN ORDER. FORM TRAVELER ALIGNMENT FORCE MAY NOW BE REMOVED.
7. AFTER CLOSURE SEGMENT ACHIEVES A MINIMUM CONCRETE COMPRESSIVE STRENGTH OF 4000 PSI, STRESS TRANSVERSE TENDONS IN CLOSURE SEGMENT. BOTH FORM TRAVELERS AND STABILITY PROP(S) MAY BE REMOVED FROM CANTILEVER 4 AND MOVED TO CANTILEVER 3.
8. AFTER CLOSURE SEGMENT ACHIEVES A MINIMUM CONCRETE COMPRESSIVE STRENGTH OF 7500 PSI, STRESS BOTTOM SLAB CONTINUITY TENDONS B 5−01, B 5−02, B 5−03, B 5−04, & B 5−05 IN ORDER. FALSEWORK MAY BE REMOVED FROM C.I.P. PORTION OF SPAN 5. CONSTRUCT EAST ABUTMENT BACKWALL.

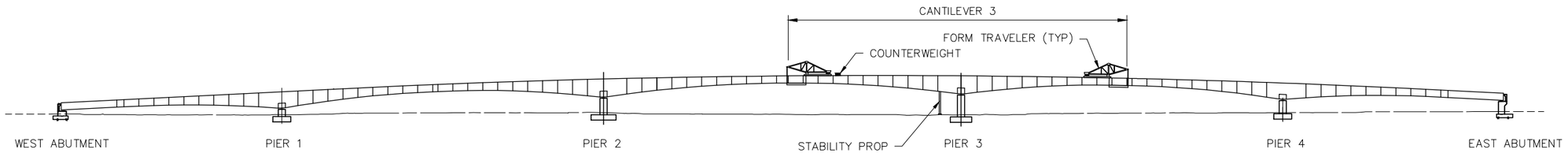

PHASE 4

MAX. REACTION AT TOP OF STABILITY PROP (KIPS)		
	COMPRESSION	TENSION
UNFACTORED WORKING LOAD	−1820	375
FACTORED EXTREME CASE DUE TO LOSS OF TRAVELER (WITH IMPACT)	−5165	3040

PHASE 4

1. CONSTRUCT CANTILEVER 3 PER SEQUENCE GIVEN ON "SUPERSTRUCTURE CONST. SCHEME 2" SHEET. LOCK SUPERSTRUCTURE TO SUBSTRUCTURE AT PERMANENT BEARINGS FOR TRANSLATION AT PIER 3.
2. AFTER CASTING SEGMENT 3−10W AND STRESSING CANTILEVER TENDONS T 3−21, THE DOWNSTATION FORM TRAVELER & COUNTERWEIGHT(S) IS NOT ADVANCED TO THE NEXT POSITION BUT SHALL REMAIN IN PLACE UNTIL STEP 7 BELOW. THE UPSTATION FORM TRAVELER IS ADVANCED AND USED TO ALIGN THE CANTILEVER TIPS AND CAST THE SPAN 4 CLOSURE SEGMENT 4−CS. JACK DOWN ON FORM TRAVELER (REACTS UP ON CANTILEVER 4 TIP) TO ALIGN THE CANTILEVER TIPS (IF REQUIRED). MAGNITUDE OF FORCE TO ALIGN THE CANTILEVER TIPS IS DEPENDENT UPON THE DEGREE OF MISALIGNMENT (90 KIPS ASSUMED IN DESIGN).
3. AFTER CLOSURE SEGMENT 4−CS ACHIEVES A MINIMUM CONCRETE COMPRESSIVE STRENGTH OF 1500 PSI AND NOT MORE THAN 8 HOURS AFTER POURING CONCRETE, RELEASE SUPERSTRUCTURE FROM SUBSTRUCTURE TO PERMANENT BEARINGS FOR TRANSLATION AT PIER 4 AND STRESS WEB CONTINUITY TENDONS W 4−01.
4. AFTER CLOSURE SEGMENT 4−CS ACHIEVES A MINIMUM CONCRETE COMPRESSIVE STRENGTH OF 2500 PSI, STRESS REMAINING WEB CONTINUITY TENDONS W 4−02, W 4−03, & W 4−04 IN ORDER. FORM TRAVELER ALIGNMENT FORCE MAY NOW BE REMOVED. UPSTATION FORM TRAVELER REMAINS IN PLACE UNTIL STEP 10 BELOW.
5. AFTER CLOSURE SEGMENT 4−CS ACHIEVES A MINIMUM CONCRETE COMPRESSIVE STRENGTH OF 4000 PSI, STRESS TRANSVERSE TENDONS IN CLOSURE SEGMENT.
6. AFTER CLOSURE SEGMENT 4−CS ACHIEVES A MINIMUM CONCRETE COMPRESSIVE STRENGTH OF 7500 PSI, STRESS BOTTOM SLAB CONTINUITY TENDONS B 4−01, B 4−02, & B 4−03 IN ORDER.
7. AFTER STRESSING CONTINUITY TENDONS IN SPAN 4 IS COMPLETED, THE DOWNSTATION FORM TRAVELER IS ADVANCED AND USED TO ALIGN THE CANTILEVER TIPS AND CAST THE SPAN 3 CLOSURE SEGMENT 3−CS. REMOVE COUNTERWEIGHT(S) AND JACK DOWN ON FORM TRAVELER (REACTS UP ON CANTILEVER 2 TIP) TO ALIGN THE CANTILEVER TIPS (IF REQUIRED). MAGNITUDE OF FORCE TO ALIGN CANTILEVER IS DEPENDENT UPON THE DEGREE OF MISALIGNMENT (70 KIPS ASSUMED IN DESIGN).
8. AFTER CLOSURE SEGMENT 3−CS ACHIEVES A MINIMUM CONCRETE COMPRESSIVE STRENGTH OF 1500 PSI AND NOT MORE THAN 8 HOURS AFTER POURING CONCRETE, RELEASE SUPERSTRUCTURE FROM SUBSTRUCTURE TO PERMANENT BEARINGS FOR TRANSLATION AT PIER 3 AND STRESS WEB CONTINUITY TENDONS W 3−01.
9. AFTER CLOSURE SEGMENT 3−CS ACHIEVES A MINIMUM CONCRETE COMPRESSIVE STRENGTH OF 2500 PSI, STRESS REMAINING WEB CONTINUITY TENDONS W 3−02, W 3−03, & W 3−04 IN ORDER. FORM TRAVELER ALIGNMENT FORCE MAY NOW BE REMOVED.
10. AFTER CLOSURE SEGMENT 3−CS ACHIEVES A MINIMUM CONCRETE COMPRESSIVE STRENGTH OF 4000 PSI, STRESS TRANSVERSE TENDONS IN CLOSURE SEGMENT. BOTH FORM TRAVELERS AND STABILITY PROP(S) MAY BE REMOVED.
11. AFTER CLOSURE SEGMENT ACHIEVES A MINIMUM CONCRETE COMPRESSIVE STRENGTH OF 7500 PSI, STRESS BOTTOM SLAB CONTINUITY TENDONS B 3−01, B 3−02, B 3−03, B 3−06, B 3−04, B 3−05, & B 3−07 IN ORDER.
12. CONSTRUCT RETAINING WALLS FOR APPROACHES AT WEST & EAST ABUTMENTS.
13. INSTALL EXPANSION JOINT DEVICES AND DRAINAGE SYSTEM. CONSTRUCT WALKWAYS, RAILINGS, AND TRACK WORK.

NOTES

THIS DRAWING IS A SCHEMATIC FOR THE OVERALL CONSTRUCTION SEQUENCE. FOR A SCHEMATIC OF CAST−IN−PLACE SEGMENTAL CONSTRUCTION OF THE CANTILEVERS, SEE "SUPERSTRUCTURE CONST. SCHEME 2" SHEET.

UNLESS NOTED OTHERWISE, CONCRETE SHALL ACHIEVE A MINIMUM COMPRESSIVE STRENGTH OF 4000 PSI PRIOR TO STRESSING ANY POST−TENSIONING ANCHORING IN THAT ELEMENT OR SEGMENT. THE TRANSVERSE TENDONS IN A SEGMENT SHALL BE STRESSED FIRST, FOLLOWED BY THE CANTILEVER TENDONS. ALL TENDONS ANCHORING IN A SEGMENT SHALL BE STRESSED PRIOR TO LOWERING THE FORMS AND ADVANCING THE FORM TRAVELER.

FOR ADDITIONAL INFORMATION, SEE "SUPERSTRUCTURE CONST. SCHEME 1" SHEET.

NO.	DATE	BY	CHECK	DESIGN	REVISION / SUBMITTAL

DESIGNED BY: ETN CHECKED BY: JWJ
DRAWN BY: LSS CHECKED BY: JWJ

AECOM

90% SUBMISSION - 01/22/16

METROPOLITAN COUNCIL

SOUTHWEST Green Line LRT Extension

CIVIL - VOLUME 4D
EXCELSIOR BLVD
BRIDGE 27C10
SUPERSTRUCTURE CONST. SCHEME 4

DISCIPLINE: STRUCTURE
SHEET NAME: CBR27C10-BRG-SUP-088

SHEET 144 OF 174

Jan, 14 2016 05:41 pm v:\3400_ADC\CAD\SEGMENT E1\PLAN SHEETS\STRUCTURES\CBR27C10\CBR27C10-BRG-SUP-085.dwg By: songers

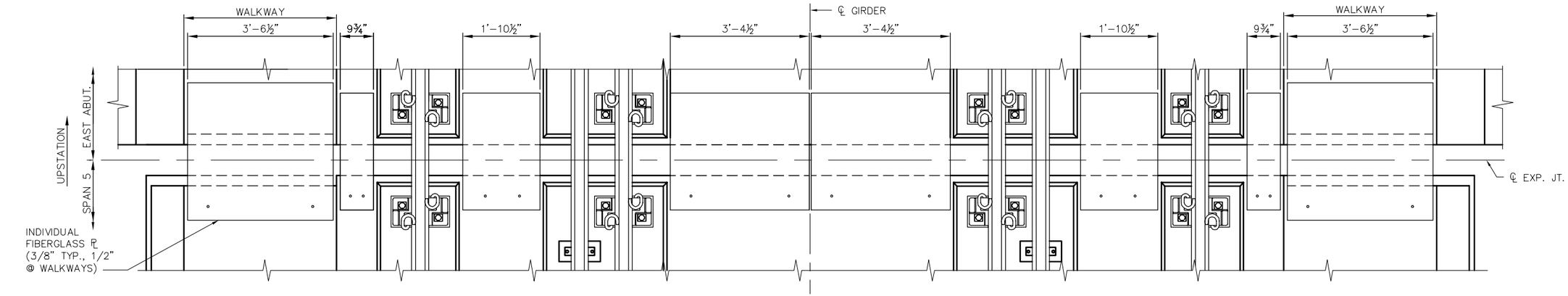

PLAN VIEW
(EAST ABUTMENT SHOWN, WEST ABUTMENT SIMILAR)

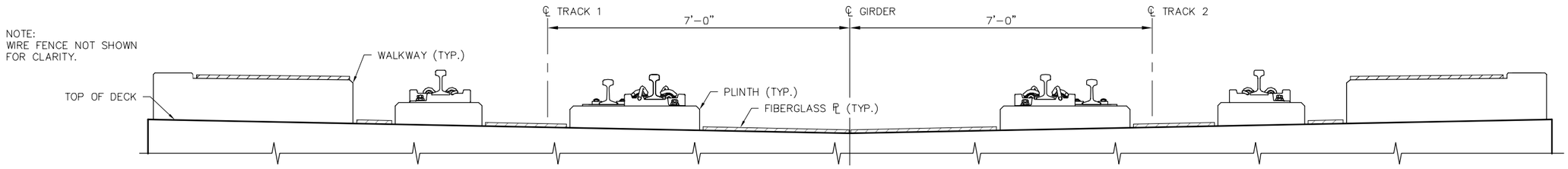

SECTION AT EXPANSION JOINT
(EAST ABUTMENT SHOWN, WEST ABUTMENT SIMILAR)

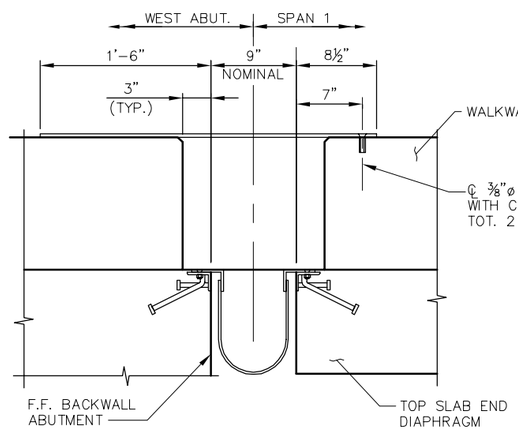

CROSS SECTION - EXPANSION JOINT DEVICE (TYP.)
(@ WALKWAY, WEST ABUTMENT SHOWN,
EAST ABUTMENT SIMILAR)

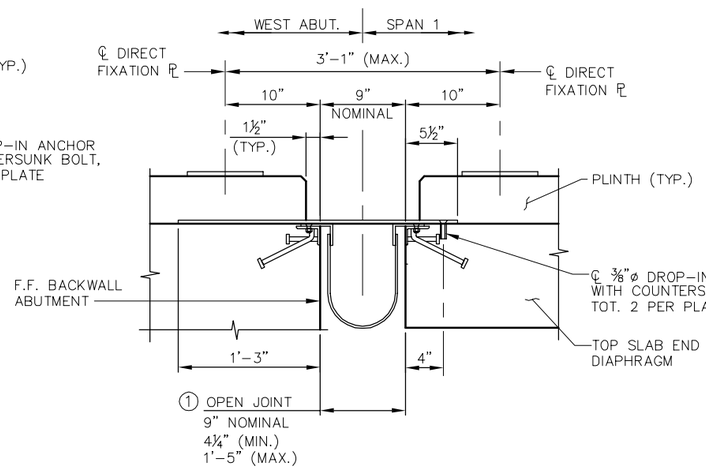

CROSS SECTION - EXPANSION JOINT DEVICE (TYP.)
(WEST ABUTMENT)

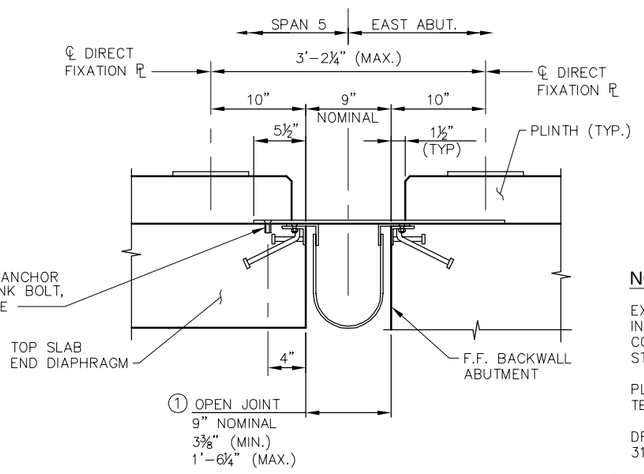

CROSS SECTION - EXPANSION JOINT DEVICE (TYP.)
(EAST ABUTMENT)

NOTES:

EXPANSION JOINT DEVICES SHALL NOT BE INSTALLED UNTIL THE ENTIRE STRUCTURE IS CONSTRUCTED AND ALL LONGITUDINAL TENDONS STRESSED.

PLATES SHALL BE FIBERGLASS WITH A COARSE TEXTURED SLIP RESISTANT SURFACE.

DROP-IN ANCHORS AND BOLTS SHALL BE TYPE 316 STAINLESS STEEL.

① NOMINAL JOINT DIMENSION IS AT A TEMPERATURE OF 45°F AT THE END OF CONSTRUCTION BEFORE CREEP AND SHRINKAGE HAVE OCCURRED.

NO.	DATE	BY	CHECK	DESIGN	REVISION / SUBMITTAL

DESIGNED BY: ETN CHECKED BY: JWJ
DRAWN BY: TMW CHECKED BY: JWJ

AECOM

90% SUBMISSION - 01/22/16

METROPOLITAN COUNCIL

SOUTHWEST Green Line LRT

CIVIL - VOLUME 4D
EXCELSIOR BLVD
BRIDGE 27C10
EXPANSION JOINT DEVICE DETAILS 1

DISCIPLINE: STRUCTURE
SHEET NAME: CBR27C10-BRG-EXP-001

SHEET 145 OF 174

Jan, 18 2016 01:20 pm \\Wadtc2fp001\SWLRT\3400_ADC\CAD\SEGMENT E1\PLAN SHEETS\STRUCTURES\CBR27C10\CBR27C10-BRG-EXP-001.dwg By: WaltzT

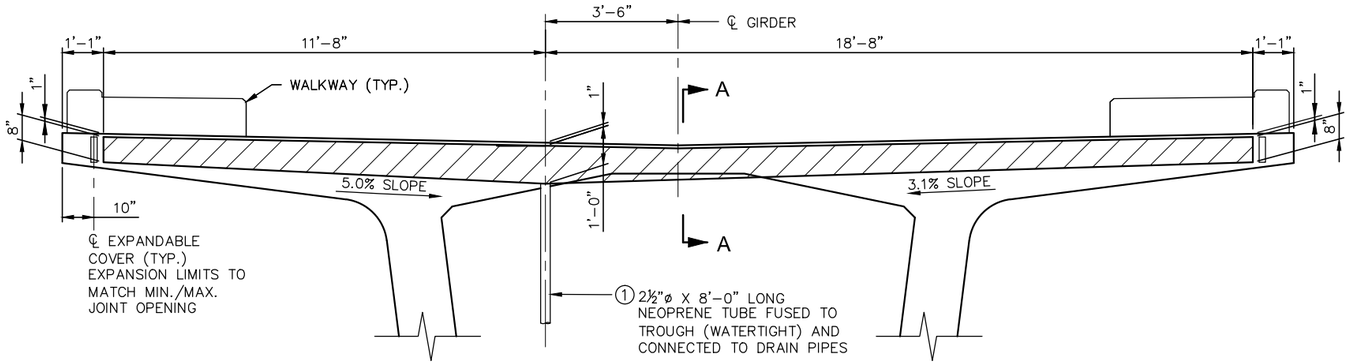

CROSS SECTION
DRAINAGE TROUGH AT ABUTMENT

(EAST ABUTMENT SHOWN LOOKING UPSTATION, WEST ABUTMENT SIMILAR)

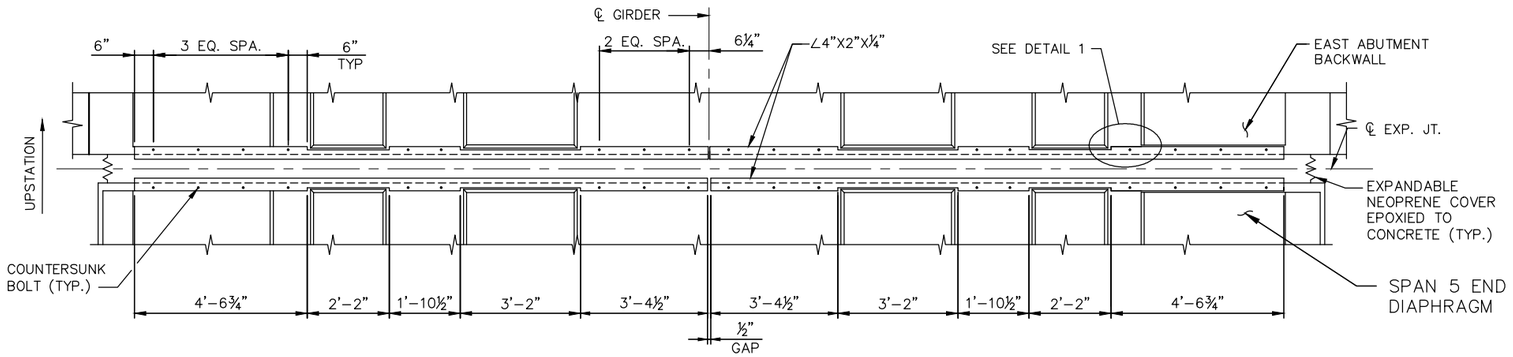

PLAN - TOP SLAB
DRAINAGE TROUGH AT ABUTMENT

(EAST ABUTMENT SHOWN, WEST ABUTMENT SIMILAR)
(FIBERGLASS PLATES NOT SHOWN FOR CLARITY)

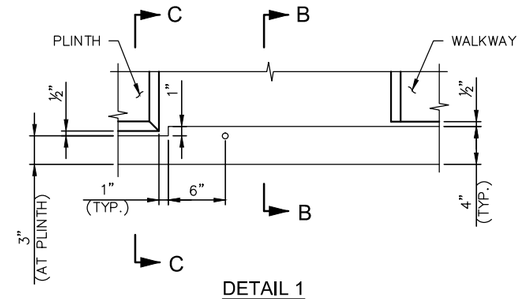

DETAIL 1

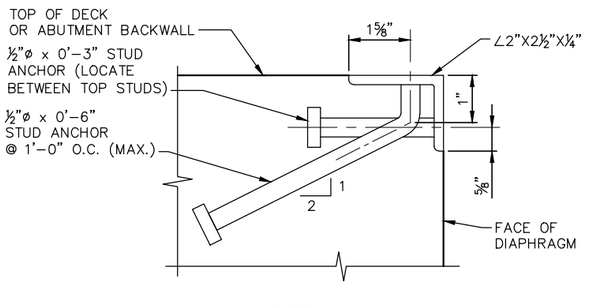

DETAIL 2

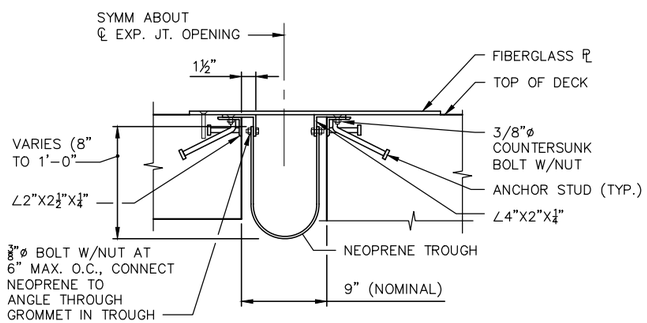

SECTION A-A

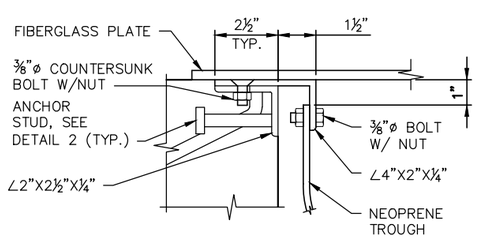

SECTION B-B

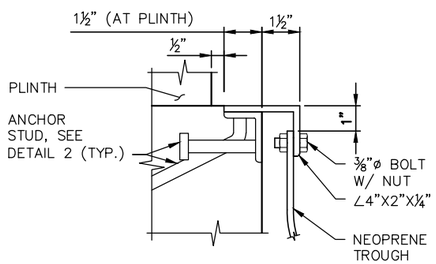

SECTION C-C

NOTES:

ALL STEEL ANGLES SHALL CONFORM TO ASTM A36 OR BETTER. BOLTS FOR ANGLES SHALL CONFORM TO ASTM A307.

ALL ANGLES, BOLTS, AND ASSOCIATED HARDWARE SHALL BE HOT DIP GALVANIZED IN ACCORDANCE WITH MnDOT SPEC 3394.

∠2"X2½"X¼" TO BE CAST WITH END DIAPHRAGM SEGMENT AND ABUT. BACKWALL SO THAT WHEN THE ∠4"X2"X¼" IS INSTALLED, THE TOP ANGLE IS FLUSH WITH THE TOP OF THE DECK.

NEOPRENE TROUGH SHALL BE 60 DUROMETER.

CONTRACTOR SHALL SUBMIT SHOP PLANS OF THE EXPANSION JOINT DEVICE TO THE ENGINEER FOR APPROVAL.

① SEE "DRAINAGE DETAILS" SHEETS FOR ROUTING AND CONNECTION OF 2½"ø NEOPRENE TUBE TO DRAIN PIPES.

NO.	DATE	BY	CHECK	DESIGN	REVISION / SUBMITTAL

DESIGNED BY: ETN | CHECKED BY: JWJ
DRAWN BY: TMW | CHECKED BY: JWJ

AECOM

90% SUBMISSION - 01/22/16

METROPOLITAN COUNCIL

SOUTHWEST Green Line LRT Extension

CIVIL - VOLUME 4D
EXCELSIOR BLVD
BRIDGE 27C10
EXPANSION JOINT DEVICE DETAILS 2

DISCIPLINE: STRUCTURE
SHEET NAME: CBR27C10-BRG-EXP-002

SHEET 146 OF 174

Jan, 18 2016 04:03 pm v:\3400_ADC\CAD\SEGMENT E1\PLAN SHEETS\STRUCTURES\CBR27C10\CBR27C10-BRG-EXP-002.dwg By: songers

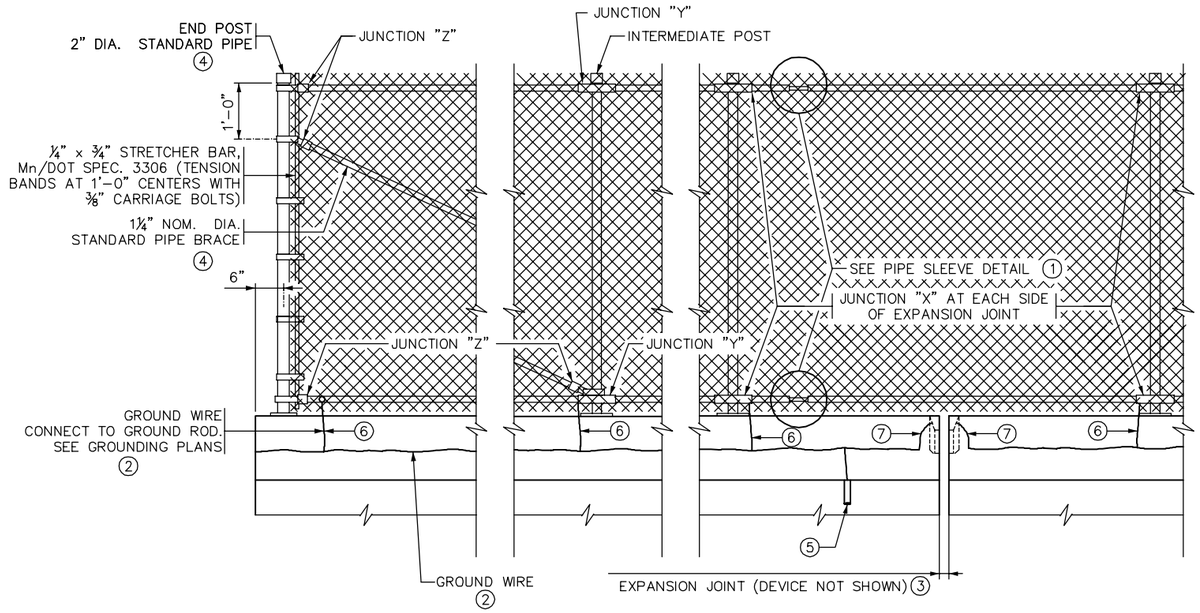

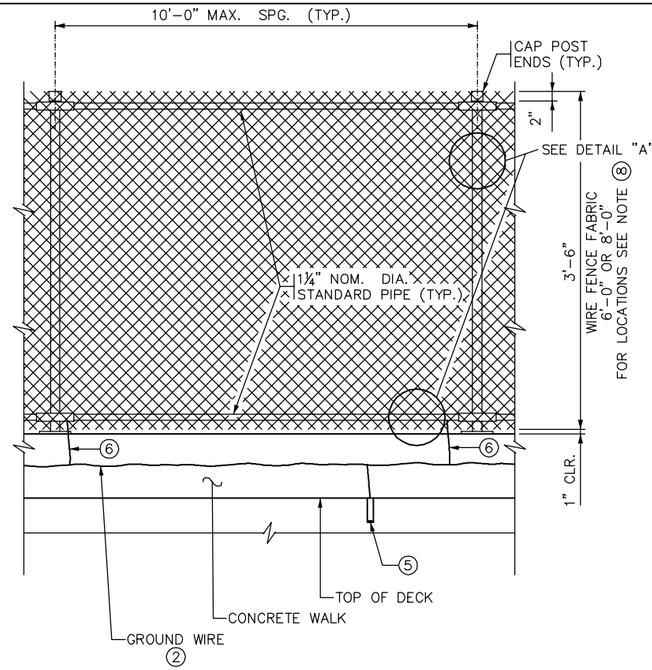

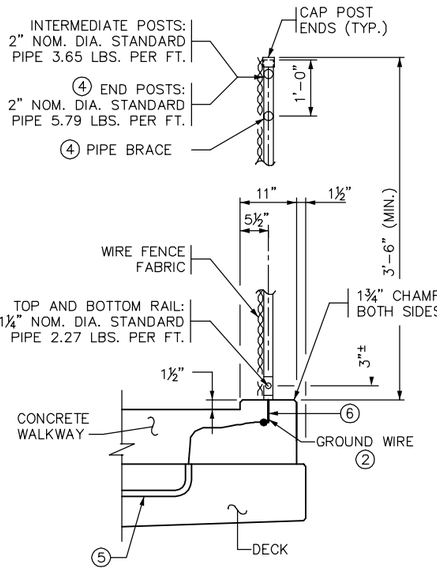

TYPICAL SECTION THROUGH FENCE

INTERMEDIATE POST SHOWN

MODIFICATIONS
REMOVED/REPLACED REFERENCES TO P-1 RAILING WITH SIDEWALK DETAILS.
ADDED TOP PIPE RAIL.
ADDED NOTATIONS OF REQUIRED FENCE GROUNDING.
ADDED STATION LOCATIONS FOR INCREASED FENCE HEIGHT.

INSIDE ELEVATION OF RAILING

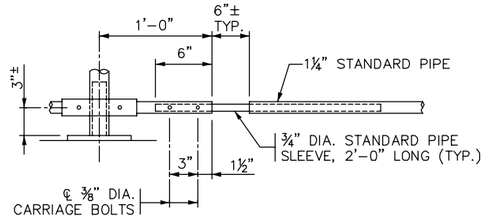

PIPE SLEEVE DETAIL ①

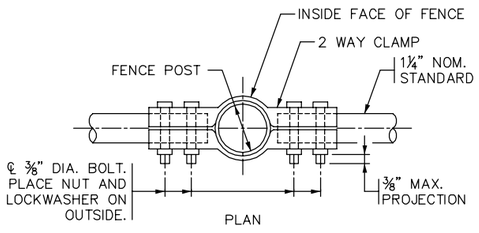

2 WAY CLAMP BENDING TABLE	
GRADE OF FENCE	Ø
0° TO 2°	0°
2° TO 6°	4°
6° TO 10°	8°

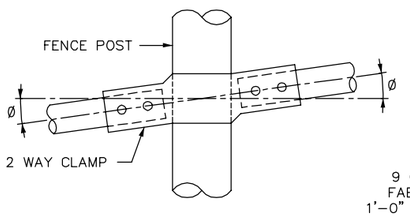

JUNCTION "X"

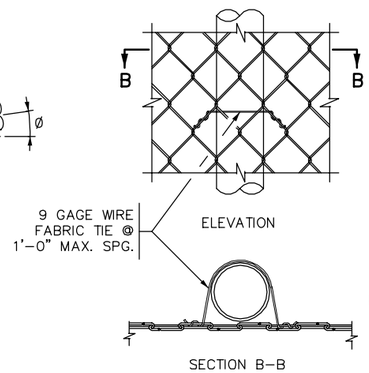

DETAIL "A"

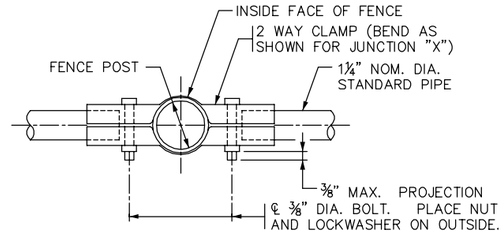

JUNCTION "Y"

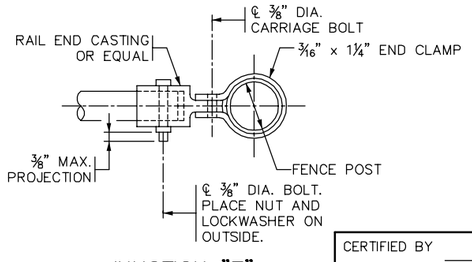

JUNCTION "Z"

GENERAL NOTES

~~LENGTH OF "WIRE FENCE" FOR PAYMENT SHALL BE MEASURED BETWEEN THE CENTERS OF END RAILPOSTS.~~

FENCE POST ANCHORAGES SHALL BE TYPE A. SEE DETAIL B905 "FENCE POST ANCHORAGE".

FENCE POSTS AND FENCE POST ANCHORAGES SHALL BE SET VERTICAL, UNLESS OTHERWISE NOTED.

℄ OF FENCE POST ANCHORAGE SHALL BE A MINIMUM OF 6" FROM JOINTS.

~~ALL POSTS SHALL HAVE A MEANS TO SECURELY HOLD THE TOP TENSION WIRE IN POSITION AND ALLOW FOR THE REMOVAL AND REPLACEMENT OF A POST WITHOUT DAMAGING THE TOP WIRE.~~

WIRE TIES MAY BE 9 GAGE GALVANIZED STEEL OR 0.179" MIN. ALUMINUM ALLOY CONFORMING TO A.S.T.M. B211, ALLOY 1100-H18. ~~USE 12½" GAGE GALVANIZED HOG RINGS FOR TENSION WIRE TIES.~~

SEE SPECIAL PROVISIONS FOR REQUIREMENTS NOT INCLUDED ON THIS SHEET ~~AND FOR BASIS OF PAYMENT.~~

(1) PROVIDE PIPE SLEEVE IN SPAN BETWEEN THE VERTICAL POSTS AT EXPANSION JOINT. SEE SUPERSTRUCTURE SHEETS FOR LOCATION.

(2) LONGITUDINAL COLLECTOR GROUND WIRE CONTINUOUS BETWEEN EXPANSION JOINTS

(3) SEE SUPERSTRUCTURE PLANS FOR JOINT OPENINGS.

(4) END POSTS AND BRACING SHALL BE AT 500 FT. MAXIMUM INTERVALS.

(5) GROUND WIRE PLACED IN 1" PVC CONDUIT AT PIERS 1-4. SEE "MISC. SUPERSTRUCTURE DETAILS 3" SHEET FOR ROUTING OF CONDUIT.

(6) GROUND WIRE PIGTAIL PLACED WITHIN 6" OF EACH FENCE POST ANCHORAGE. CONTRACTOR SHALL COORDINATE LOCATIONS WITH FENCE SUB CONTRACTOR.

(7) GROUND WIRE PIGTAIL CONNECTION TO EXPANSION JOINT DEVICE.

(8) TYPICAL WIRE FENCE HEIGHT IS 3'-6". THE HEIGHT INCREASES TO 6'-0" ON THE SOUTH SIDE OF BRIDGE FROM STATION 2553+60 TO 2554+20 AND 2555+40 TO 2556+00 AND ON THE NORTH SIDE FROM STATION 2556+20 TO 2556+80 AND 2558+00 TO 2558+60. AN 8'-0" HEIGHT IS REQUIRED ON THE SOUTH SIDE FROM STATION 2554+20 TO 2555+40 AND ON THE NORTH FROM STATION 2556+80 TO 2558+00. A 3'-6" HIGH ABSORPTIVE SOUND BARRIER IS REQUIRED ON THE SOUTH SIDE FROM STATION 2547+00 TO 2552+00. (SEE "SOUND BARRIER DETAILS" SHEET)

REVISED: 04-17-2013

APPROVED: DECEMBER 18, 2003
Daniel L. Hoogyan
STATE BRIDGE ENGINEER

CERTIFIED BY _____ LICENSED PROFESSIONAL ENGINEER _____ DATE

NAME: LIC. NO.

TITLE: WIRE FENCE (DESIGN W-1) ~~AND CONCRETE PARAPET (TYPE P-1) (WITH INTEGRAL END POST)~~

DES: JWJ	DR: EAN	APPROVED:
CHK: ETN	CHK: ETN	

SHEET NO. 147 OF 174 SHEETS

FIG. 5-397.119 (MOD.)

BRIDGE NO. 27C10

Jan. 18 2016 08:59 am \\Wadtc2fp001\SWLRT\3400_ADC\CAD\SEGMENT E1\PLAN SHEETS\STRUCTURES\CBR27C10-BRG-RAL-001.dwg By: WaltzT

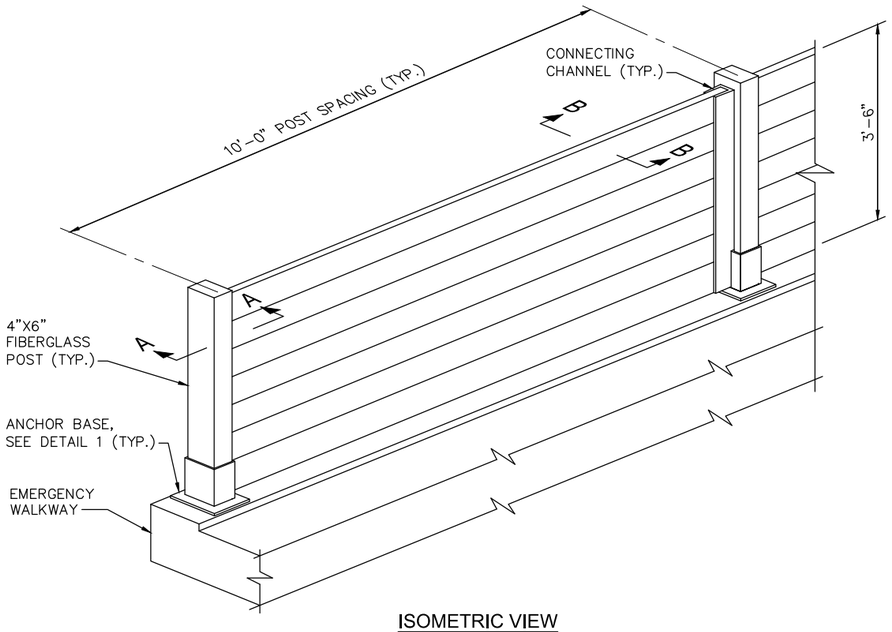

ISOMETRIC VIEW

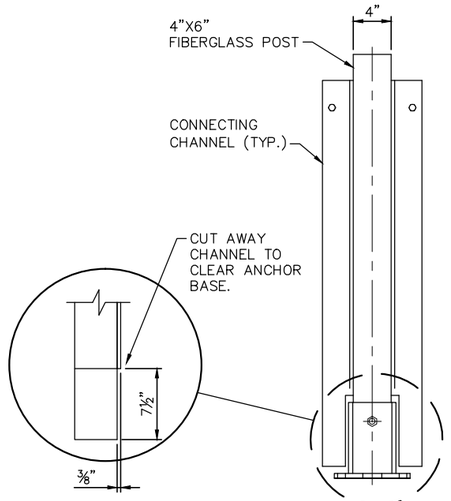

SECTION A-A

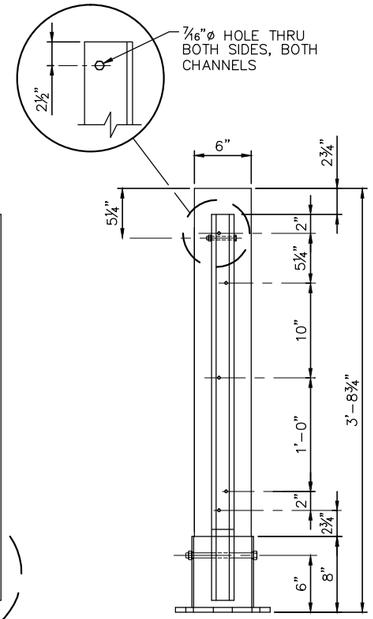

SECTION B-B

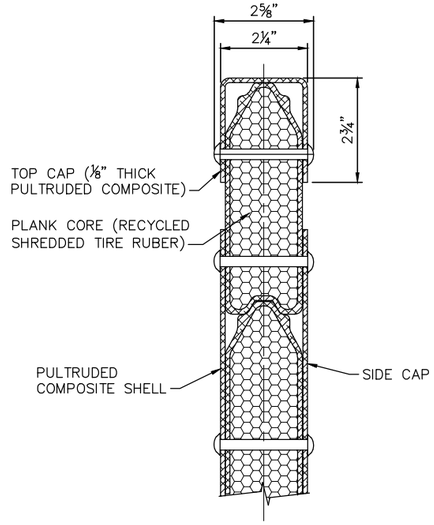

TYPICAL PANEL SECTION

NOTES:

SOUND BARRIER SHALL BE INSTALLED BETWEEN STA. 2547+00 AND STA. 2552+00 ON SOUTH SIDE ONLY.

CARSONITE ACOUSTASHIELD SOUND BARRIER SHOWN. AN EQUIVALENT ALTERNATIVE MAY BE PROPOSED BY THE CONTRACTOR FOR APPROVAL BY THE ENGINEER. WEIGHT OF BARRIER MAY NOT EXCEED 40 PLF (INCLUDING 1½"TALL CURB).

SOUND BARRIER PANEL IS PREFABRICATED TO DESIRED DIMENSION BY STACKING INDIVIDUAL 6 INCH BARRIER PLANKS. PLANKS ARE STACKED AND ASSEMBLED WITH CHANNELS WHICH ENCAPSULATE THE SIDES OF EACH PANEL. EACH PANEL HAS TONGUE AND GROOVE TOP AND BOTTOM EDGES TO PREVENT GAPS. EACH PANEL HAS A TOP CAP AND TWO SIDE CAPS. THE FINISHED LENGTH OF A PANEL IS DETERMINED BY POST SPACING.

PLANKS ARE CLOSED FIBERGLASS REINFORCEMENT THERMOSET STRUCTURAL COMPOSITE SHELLS. THE COMPOSITE IS MANUFACTURED WITH COLORED PIGMENTATION THROUGHOUT WITH FLAME RETARDENT COMPOUNDS FOR DURABILITY AND FIRE RESISTANCE WITH FLAME SPREAD INDEX PER ASTM E84 OF 20. THE PANEL SURFACE IS COATED WITH UV RESISTANT CHEMICALS TO MAINTAIN COLOR AND APPEARANCE. COLOR SPECIFIED BY OWNER IN ACCORDANCE WITH FEDERAL STANDARD 595B

SOUND TRANSMISSION CLASS PER ASTM E 90.E413 > 30.

PANELS SHALL BE CUT ON A MITER TO MATCH THE SLOPE OF THE BRIDGE.

POST SHALL BE INSTALLED PLUMB

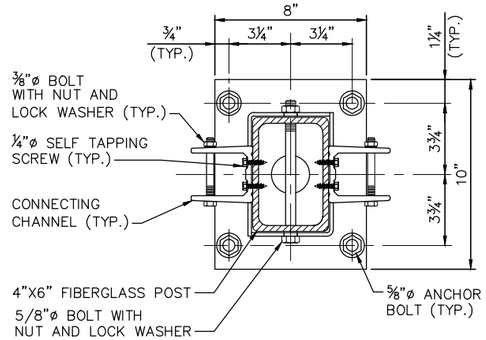

DETAIL 1 - ANCHOR BASE ℙ
(PART NO. 37-65-0119-34 SHOWN)

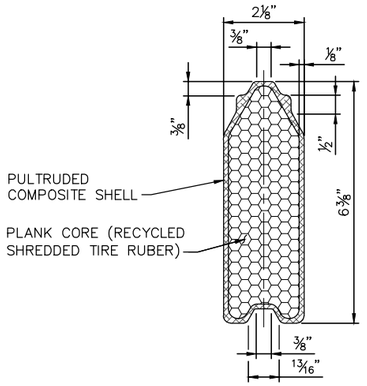

PLANK DETAIL

NO.	DATE	BY	CHECK	DESIGN	REVISION / SUBMITTAL

DESIGNED BY: JWJ | CHECKED BY: ETN
DRAWN BY: TMW | CHECKED BY: Value

AECOM

90% SUBMISSION - 01/22/16

METROPOLITAN COUNCIL

SOUTHWEST Green Line LRT Extension

CIVIL - VOLUME 4D
EXCELSIOR BLVD
BRIDGE 27C10
SOUND BARRIER DETAILS

DISCIPLINE: STRUCTURE

SHEET NAME: CBR27C10-BRG-RAL-002

SHEET 148 OF 174

Jan, 18 2016 04:10 pm V:\3400_ADC\CAD\SEGMENT E1\PLAN SHEETS\STRUCTURES\CBR27C10\CBR27C10-BRG-RAL-002.dwg By: hodgesj

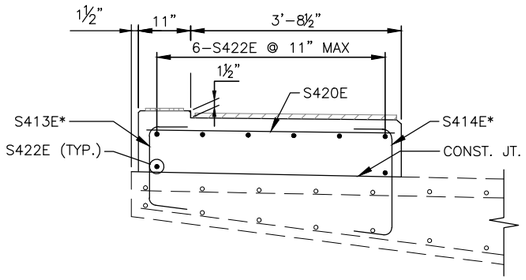

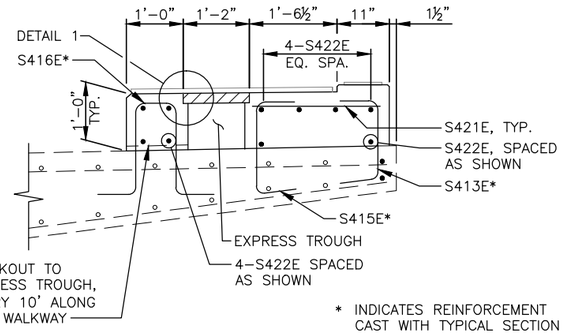

* INDICATES REINFORCEMENT CAST WITH TYPICAL SECTION

WALKWAY ELEVATION

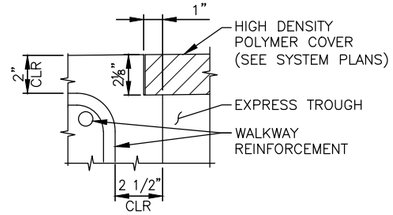

DETAIL 1

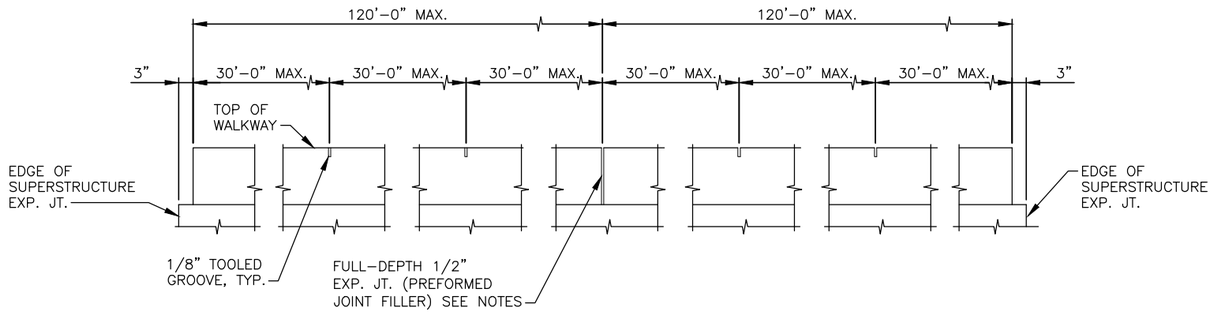

WALKWAY JOINT SPACING

BILL OF REINFORCEMENT (BOTH WALKWAYS)			
BAR	NO.	LENGTH	SHAPE
S420E	1080	4' 5½"	STR
S421E	1080	2'–3½"	STR
S422E	846	40'–0"	STR

NOTES:

FOR SEGMENT REINFORCEMENT, SEE SPAN 1 CIP, SPAN 5 CIP, CANTILEVER SEGMENT, AND PIER TABLE REINFORCEMENT SHEETS.

FOR THE EXPRESS TROUGH DETAILS, SEE SYSTEMWIDE ELECTRICAL DETAILS.

BOND BREAKER MATERIAL CAN BE ANY IMPERMEABLE COATED OR SHEET MEMBRANE OR PREFORMED MATERIAL HAVING A THICKNESS NOT LESS THAN 6 MILS NOR MORE THAN 1/2"

FOR S422E BARS PROVIDED IN 40 FT LENGTHS, MINIMUM LAP SPLICE LENGTH IS 30".

NO.	DATE	BY	CHECK	DESIGN	REVISION / SUBMITTAL

DESIGNED BY: JWJ CHECKED BY: ETN
DRAWN BY: TMW CHECKED BY: ETN

AECOM

90% SUBMISSION - 01/22/16

METROPOLITAN COUNCIL

SOUTHWEST Green Line LRT Extension

CIVIL - VOLUME 4D
EXCELSIOR BLVD
BRIDGE 27C10
EMERGENCY WALKWAY DETAILS

DISCIPLINE: STRUCTURE

SHEET NAME: CBR27C10-BRG-RAL-003

SHEET 149 OF 174

Jan, 18 2016 04:07 pm V:\3400_ADC\CAD\SEGMENT E1\PLAN SHEETS\STRUCTURES\CBR27C10\CBR27C10-BRG-RAL-003.dwg By: hodgesj

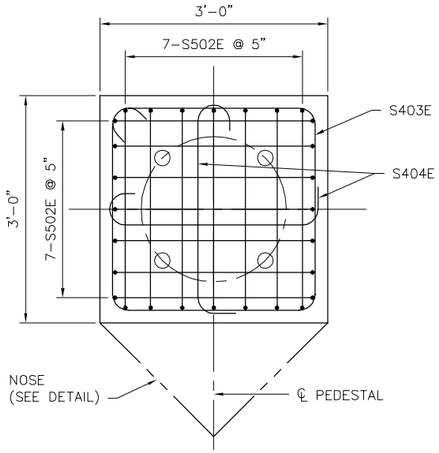

PEDESTAL REINF. PLAN

BILL OF REINFORCEMENT - ONE PEDESTAL				
BAR	NO.	LENGTH	SHAPE	LOCATION
S501E	40	7'-0"	STR.	DECK SLAB
S502E	14	7'-10½"		PEDESTAL
S403E	4	11'-5"		PEDESTAL
S404E	8	3'-7"		PEDESTAL
S405E	4	4'-0"		NOSE
S406E	6	2'-8"		NOSE

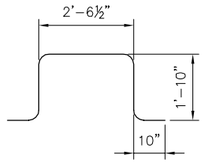

S502E

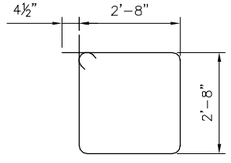

S403E

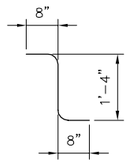

S406E

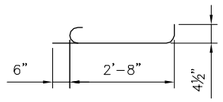

S404E

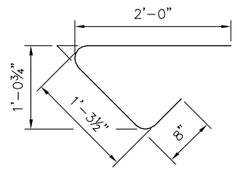

S405E

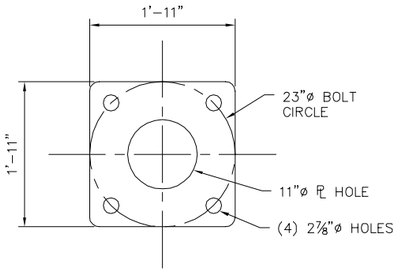

② BOTTOM BEARING PLATE PLAN
(POLE TYPE TT3 SHOWN)

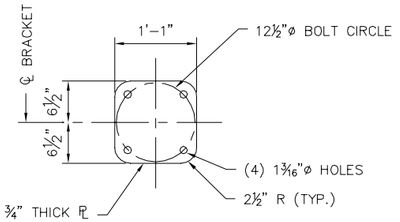

② DOWN GUY BOTTOM BEARING PLATE PLAN

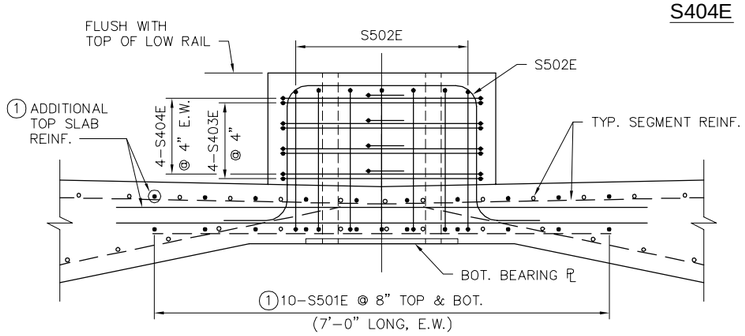

PEDESTAL REINF. ELEVATION

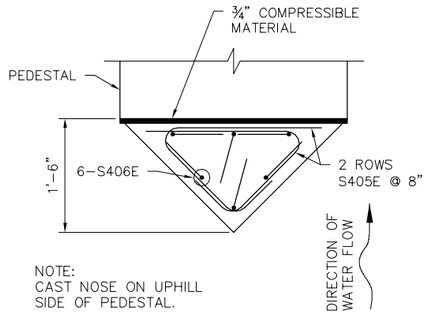

NOTE:
CAST NOSE ON UPHILL
SIDE OF PEDESTAL.

NOSE DETAIL

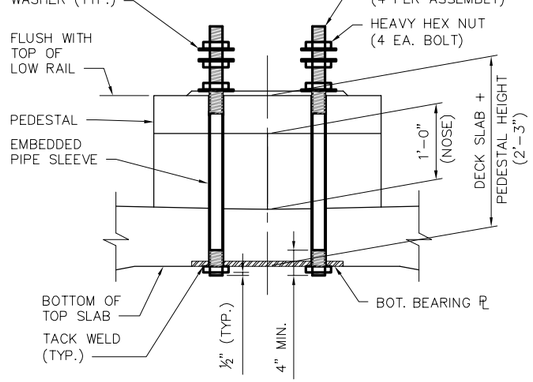

② OCS POLE PEDESTAL ELEVATION
(POLE TYPE TT3 SHOWN)

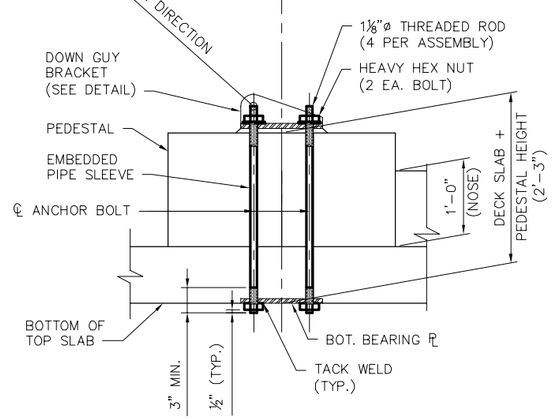

DOWN GUY BRACKET ELEVATION

NOTES:

CONCRETE COVER FOR PEDESTAL SHALL BE 2" UNLESS OTHERWISE NOTED.

USE EMBEDDED SLEEVE THROUGH PEDESTAL AND DECK SLAB WITH A BOTTOM BEARING PLATE EQUAL IN PLAN SIZE TO THE TOP OCS POLE BEARING PLATE. SEE OCS POLE ANCHORAGE ASSEMBLY DETAILS AND FOUNDATION SCHEDULES IN CIVIL VOLUME 12 FOR ADDITIONAL OCS PLATE DETAILS.

STRUCTURAL STEEL ELEMENTS SHALL CONFORM TO THE FOLLOWING ASTM SPECIFICATIONS:

- BEARING PLATES A572 GRADE 50
- ANCHOR BOLTS (THREADED RODS) F1554 GRADE 55
- HEXAGONAL NUTS A563, AND
- WASHERS F436

ALL STEEL SHALL BE HOT-DIPPED GALVANIZED IN ACCORDANCE WITH ASTM A123 AND A153.

CONTRACTOR MAY PROVIDE FULLY THREADED ROD IF DESIRED.

ONCE OCS POLE BEARING PLATE AND ANCHOR BOLTS HAVE BEEN INSTALLED AND TIGHTENED, INTERSTITIAL SPACE BETWEEN SLEEVE AND BOLT SHALL BE FILLED WITH AN EPOXY GROUT.

NOTES (CONT.):

EPOXY GROUT SHALL HAVE THE FOLLOWING PROPERTIES:

- MINIMUM COMPRESSIVE STRENGTH OF 5000 PSI
- NON-SHRINK
- NON-METALLIC
- NON-CONDUCTIVE TO ELECTRICITY, AND
- SUITABLE FOR ADHESION TO GALVANIZED ANCHOR BOLTS.

E.W. DENOTES EACH WAY.

① ADDITIONAL TOP SLAB REINF. SHALL BE PLACED IN SAME PLANE AS AND BETWEEN TYP. SEGMENT REINF. AND IS SYM. ABOUT ℄ POLE.

② PLATE SIZE, THICKNESS AND ANCHOR BOLT LAYOUT SHALL MATCH OCS POLE ASSEMBLY DRAWINGS, SEE CIVIL VOLUME 12.

NO.	DATE	BY	CHECK	DESIGN	REVISION / SUBMITTAL

DESIGNED BY: JWJ | CHECKED BY: JL
DRAWN BY: SGS | CHECKED BY: ETN

AECOM

90% SUBMISSION - 01/22/16

METROPOLITAN COUNCIL

SOUTHWEST Green Line LRT

CIVIL - VOLUME 4D
EXCELSIOR BLVD
BRIDGE 27C10
O.C.S. POLE SUPPORT DETAILS

DISCIPLINE: STRUCTURE
SHEET NAME: CBR27C10-BRG-RAL-004

SHEET 150 OF 174

Jan, 15 2016 02:55 pm \\Nadtc2fp001\SWLRT\3400_ADC\CAD\SEGMENT E1\PLAN SHEETS\STRUCTURES\CBR27C10\CBR27C10-BRG

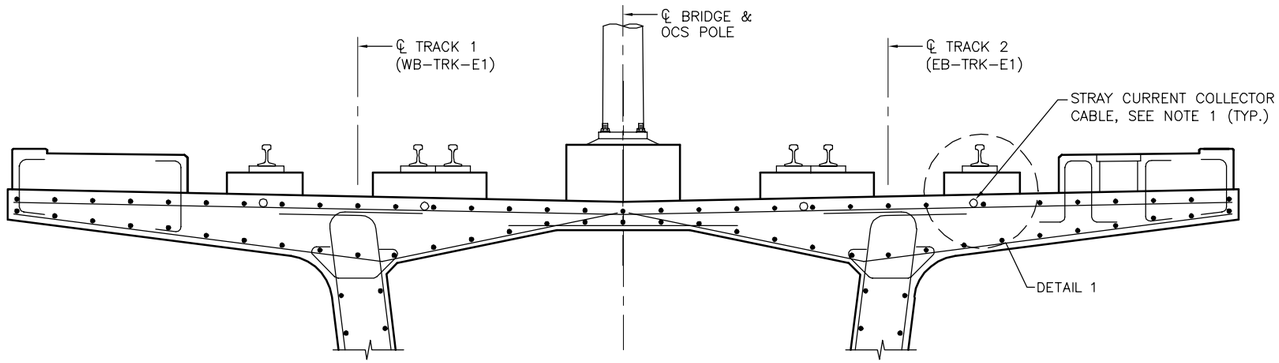

TYPICAL SECTION

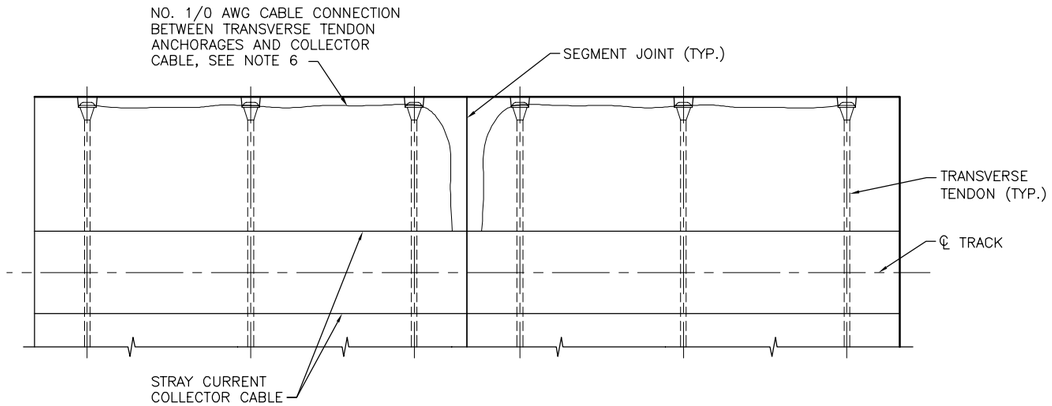

TYPICAL DECK PLAN

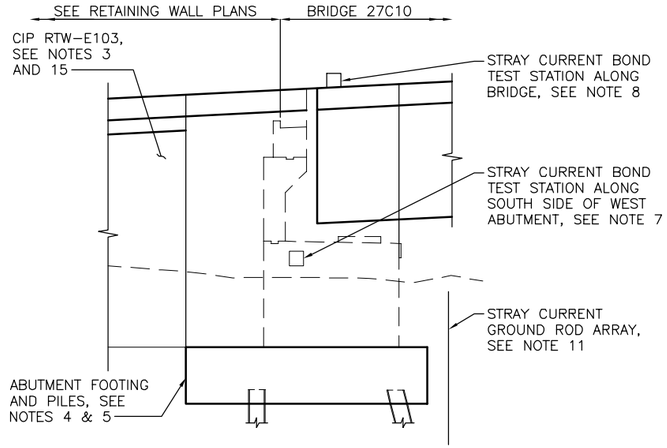

GENERAL ELEVATION
(WEST ABUTMENT SHOWN, EAST ABUTMENT SIMILAR)

NOTES:

WORK THIS SHEET WITH "STRAY CURRENT DETAILS 2" SHEET.

NO.	DATE	BY	CHECK	DESIGN	REVISION / SUBMITTAL

DESIGNED BY: JPJ | CHECKED BY: IKS
DRAWN BY: TMW | CHECKED BY: ETN

AECOM

90% SUBMISSION - 01/22/16

METROPOLITAN COUNCIL

SOUTHWEST Green Line LRT

CIVIL - VOLUME 4D
EXCELSIOR BLVD
BRIDGE 27C10
STRAY CURRENT DETAILS 1

DISCIPLINE: STRUCTURE
SHEET NAME: CBR27C10-BRG-DTL-001

SHEET 151 OF 174

Jan, 15 2016 04:01 pm \\Nadtc2fp001\SWLRT\3400_ADC\CAD\SEGMENT E1\PLAN SHEETS\STRUCTURES\CBR27C10\CBR27C10-BRG-DTL-001.dwg By: Waltzt

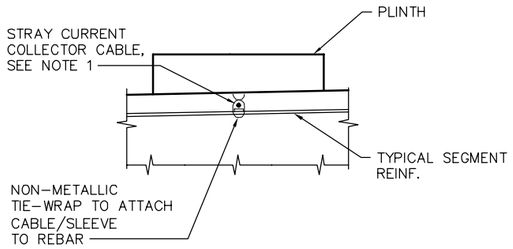

DETAIL 1

(LONGITUDINAL REINFORCEMENT NOT SHOWN FOR CLARITY)

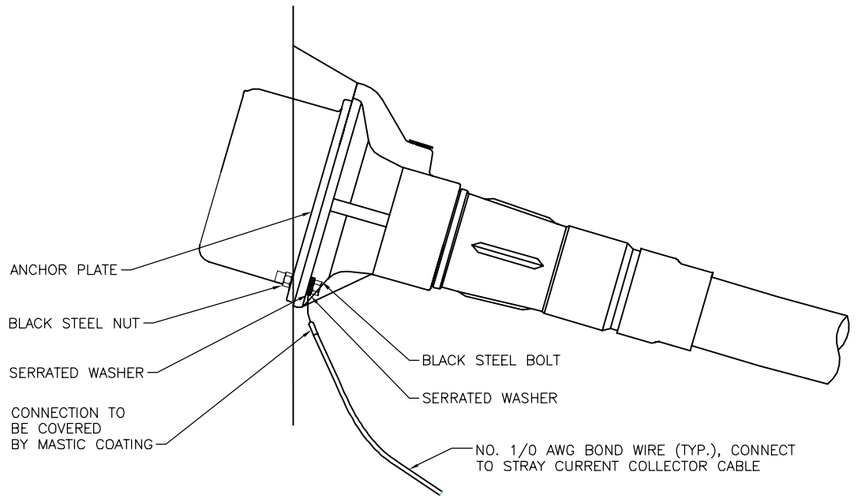

POST-TENSIONING ANCHOR
STRAY CURRENT DETAILS

NOTES:

1. AN UNCOATED, GALVANIZED 3/8" STEEL COLLECTOR CABLE SHALL BE INSTALLED INTO THE TOP OF EACH DECK SEGMENT DIRECTLY BENEATH THE LOCATION OF THE PLINTH BLOCKS ALONG THE ENTIRE LENGTH OF THE BRIDGE DECK. THE 3/8" STEEL COLLECTOR SHALL BE CONTINUOUS FOR THE LENGTH OF THE BRIDGE. AT EACH CIP SEGMENT JOINT 3/8" CABLE MAY BE THERMITE WELDED ONTO THE GALVANIZED 3/8" CABLE USING A BUTT SPLICE. SEE BUTT SPLICE DETAIL ON SHEET E0-SYS-CORR-DTL-010.
2. THWN INSULATED #1/0 AWG TEST WIRES SHALL BE PLACED RUNNING TRANSVERSELY FROM THE LONGITUDINAL COLLECTOR CABLE IN THE TOP SLAB OF THE FOUR DECK SEGMENTS AT THE LOCATIONS OF THE FOUR STRAY CURRENT TEST STATIONS SHOWN ON SHEET E0-SYS-CORR-DTL-027. THE INSULATED TEST WIRES SHALL BE BUTT OR TEE SPLICED ONTO THE COLLECTOR CABLE AS REQUIRED AND TIED TO THE EPOXY COATED REBAR USING NON-METALLIC TIES.
3. ALL EPOXY COATED REBAR SHALL BE TIED TOGETHER USING NON-METALLIC OR NON-METALLIC COATED TIES. ALL EPOXY COATED REBAR SHALL BE ISOLATED FROM BLACK BARS. EPOXY COATED DOWELS SHOULD EXTEND OUT OF THE ABUTMENT FOOTINGS INTO THE ABUTMENTS AND EXTEND OUT OF THE FOOTINGS FOR PIERS 1 THROUGH 4 INTO THE PIER COLUMNS. ALL EPOXY COATED REBAR IN ABUTMENT WINGWALLS SHALL BE ISOLATED FROM BLACK REBAR IN FOOTING AND STEM WALLS FOR RTW E102, E103, E104 AND E105.
4. BLACK REBAR IN ABUTMENT FOOTINGS SHALL BE MADE ELECTRICALLY CONTINUOUS WITHIN FOOTINGS. SEE DETAIL 5 ON SHEET E0-SYS-CORR-DTL-001.
5. H-PILES IN ABUTMENT FOOTINGS SHALL BE MADE ELECTRICALLY CONTINUOUS WITH WELDED REBAR IN FOOTINGS. SEE DETAILS ON SHEET E0-SYS-CORR-DTL-008 AND DETAIL 2 ON SHEET E0-SYS-CORR-DTL-013.
6. ALL TRANSVERSE AND LONGITUDINAL POST-TENSIONING SHALL BE MADE ELECTRICALLY CONTINUOUS WITHIN THE SLAB USING #1/0 AWG CABLES. SPLICE #1/0 AWG CABLES FROM THE TENDON ANCHORAGES TO THE 3/8" STEEL CABLES IN THE DECK SLAB AS SHOWN IN THE TYPICAL DECK PLAN USING A THERMITE WELD TEE SPLICE.
7. INSTALL STRAY CURRENT BOND TEST STATION ALONG NORTH AND SOUTH SIDES OF EAST AND WEST ABUTMENTS HOUSING TWO #1/0 AWG CABLES FROM PILES IN ABUTMENT FOOTING, ONE #14 HMWPE CABLE FROM REFERENCE CELL UNDER ABUTMENT FOOTING, TWO #1/0 AWG CABLES FROM WELDED REBAR IN RETAINING WALL FOOTING AND A PAIR OF #22 WIRES FROM REFERENCE CELL ASSEMBLY EMBEDDED IN RETAINING WALL FOOTING. SEE DETAIL 3 ON SHEET E0-SYS-CORR-DTL-003, DETAIL 2 ON SHEET E0-SYS-CORR-DTL-017. SEE NOTE 13.
8. INSTALL STRAY CURRENT BOND TEST STATION ALONG BRIDGE HOUSING TWO INSULATED THWN #1/0 AWG CABLES THAT HAVE BEEN BUTT SPLICED ONTO THE 3/8" STEEL CABLES IN THE DECK SLAB, TWO #1/0 AWG CABLES FROM WELDED REBAR IN TRANSITION SLAB AND 250 MCM CABLE TO GROUND ROD(S) AT BASE OF ABUTMENT. SEE DETAIL 2 ON E0-SYS-CORR-DTL-003, DETAILS 2 THROUGH 4 ON SHEET E0-SYS-CORR-DTL-013 AND SHEET E0-SYS-CORR-DTL-027. SEE NOTES 12 AND 13. NO REFERENCE ELECTRODE IS TO BE INSTALLED IN THE AERIAL DECK SINCE THERE IS NO BLACK REBAR IN THE DECK. SUFFICIENT SLACK SHALL BE AVAILABLE IN THE CABLES THAT SPAN THE EXPANSION JOINT TO ACCOUNT FOR MOVEMENT OF THE JOINT.
9. INSTALL STRAY CURRENT TEST STATION ALONG BRIDGE HOUSING TWO INSULATED THWN #1/0 AWG CABLES THAT HAVE BEEN TEE SPLICED ONTO 3/8" STEEL CABLES IN DECK SLAB. SEE SHEET E0-SYS-CORR-DTL-027. SEE NOTES 11 AND 12. NO REFERENCE ELECTRODE IS TO BE INSTALLED IN THE AERIAL DECK SINCE THERE IS NO BLACK REBAR IN THE DECK.
10. LONGITUDINAL REBAR IN TRANSITION SLAB SHALL BE MADE ELECTRICALLY CONTINUOUS WITHIN SLAB. END TRANSVERSE COLLECTOR BARS SHALL BE WELDED TO ALL LONGITUDINAL REBARS AT EACH END AND IN EACH REBAR LAYER OF THE TRANSITION SLAB. TOP AND BOTTOM REBAR LAYERS SHALL BE WELDED TOGETHER USING 1/2" X 2" STEEL STRAPS INSTALLED 2 PER TRACK AT EACH END OF SLAB. #1/0 AWG CABLES (2 PER TRACK) SHALL BE WELDED TO END TRANSVERSE COLLECTOR BAR NEAREST ABUTMENT AND TERMINATED IN JUNCTION BOX ALONG BRIDGE THAT HOUSES WIRES FROM BRIDGE PLINTH BLOCKS AND GROUND ROD(S). BLACK REBAR IN TRANSITION SLABS SHALL BE ISOLATED FROM EPOXY COATED REBAR IN ABUTMENT. SEE DETAILS 2 THROUGH 4 ON SHEET E0-SYS-CORR-DTL-013.

NOTES (CONTINUED):

11. INSTALL STRAY CURRENT GROUND ROD ARRAY NEAR BASE OF ABUTMENT. GROUND ROD ARRAY SHOULD EXHIBIT A MAXIMUM RESISTANCE TO EARTH OF 25 OHMS. USE 250 MCM THWN CABLE TO INTERCONNECT GROUND RODS AND AS GROUND CABLE BETWEEN STRAY CURRENT TEST STATIONS AT ENDS OF BRIDGE STRUCTURE. 250 MCM CABLE SHALL RUN INSIDE 2" SCH 80 PVC CONDUIT THAT IS EMBEDDED WITHIN ABUTMENT. SEE DETAILS 3 AND 4 ON SHEET E0-SYS-CORR-DTL-013.
12. AT THE TEST STATION LOCATIONS INSULATED THWN #1/0 AWG CABLE SHALL BE THERMITE WELDED ONTO THE GALVANIZED 3/8" CABLE USING A BUTT OR TEE SPLICE. SEE BUTT SPLICE DETAIL ON SHEET E0-SYS-CORR-DTL-010.
13. ALL STRAY CURRENT TEST STATIONS SHALL BE INSTALLED AT LOCATIONS WHERE THEY WILL BE ACCESSIBLE AFTER COMPLETION OF ALL CONSTRUCTION ACTIVITIES AND DURING REVENUE LRT OPERATIONS.
14. THE BEARINGS AT ALL PIERS SHALL PROVIDE ELECTRICAL ISOLATION OF THE STEEL ELEMENTS IN THE DECK SEGMENTS FROM STEEL ELEMENTS IN THE PIER COLUMNS.
15. ELECTRICAL ISOLATION SHALL BE MAINTAINED BETWEEN BLACK REBAR IN THE ABUTMENT FOOTINGS AND BLACK REBAR IN THE FOOTINGS AND STEM WALLS OF RTWS E102, E103, E104 AND E105.
16. NO SPECIAL STRAY CURRENT CORROSION CONTROL MEASURES ARE REQUIRED IN REGARD TO THE COLUMNS, FOOTINGS OR PILES AT PIERS 1 THROUGH 4, EXCEPT AS NOTED IN NOTE 3 WITH REGARD TO ISOLATION OF EPOXY COATED AND BLACK REBARS.

NO.	DATE	BY	CHECK	DESIGN	REVISION / SUBMITTAL

DESIGNED BY: JPJ | CHECKED BY: IKS
DRAWN BY: TMW | CHECKED BY: ETN

AECOM

90% SUBMISSION - 01/22/16

METROPOLITAN COUNCIL

SOUTHWEST Green Line LRT

CIVIL - VOLUME 4D
EXCELSIOR BLVD
BRIDGE 27C10
STRAY CURRENT DETAILS 2

DISCIPLINE: STRUCTURE
SHEET NAME: CBR27C10-BRG-DTL-002

SHEET 152 OF 174

Jan, 15 2016 04:25 pm \\Nadtc2fp001\SWLRT\3400_ADC\CAD\SEGMENT E1\PLAN SHEETS\STRUCTURES\CBR27C10\CBR27C10-BRG-DTL-002.dwg By: WaltzT

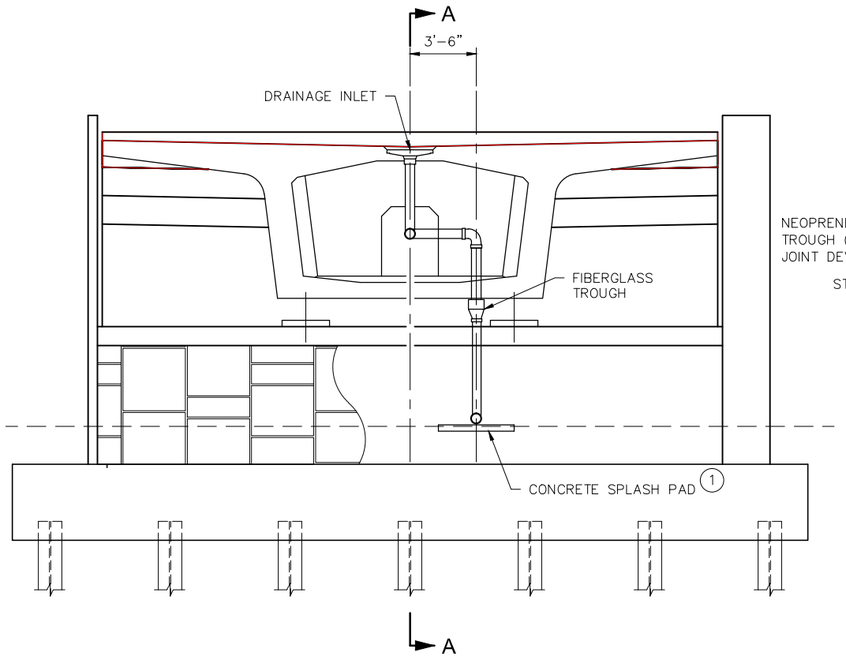

ELEVATION
(LOOKING DOWNSTATION)

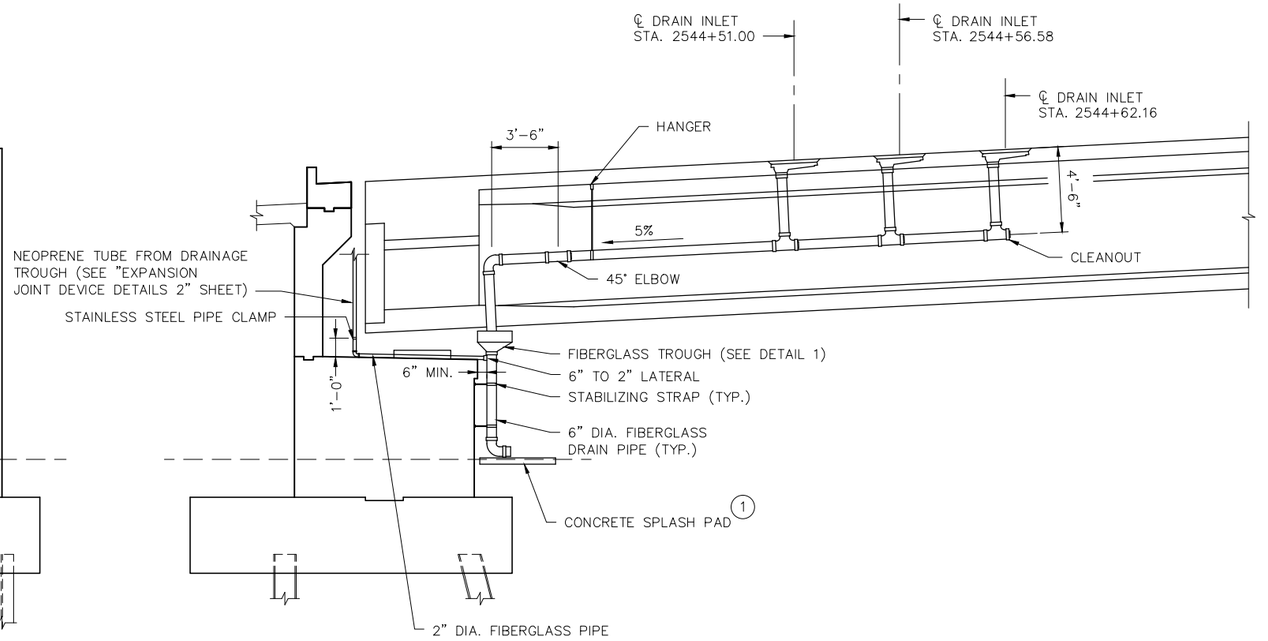

SECTION A-A

DRAIN INLETS AT WEST ABUTMENT

NOTES:

ALL DRAINAGE PIPES AND FITTINGS SHALL BE SCHEDULE 40 PIGMENTED FIBERGLASS REINFORCED THERMOSETTING RESIN PIPE, SEE SPECIAL PROVISIONS.

DRAIN INLETS SHALL BE NEENAH TYPE R-3956 WITH TYPE C GRATE OR APPROVED EQUAL. FOR DRAIN INLET DETAIL AND ADDITIONAL REINFORCING IN TOP SLAB AT EACH INLET, SEE "DRAINAGE DETAILS 6" SHEET. ALTERNATE INLET DESIGNS MUST HAVE EQUAL OR GREATER FREE OPEN AREA AND BE SUBMITTED TO THE ENGINEER FOR REVIEW AND APPROVAL.

DRAIN INLETS SHALL BE PLACED AT LOCATIONS SHOWN, CENTERED BETWEEN ADJACENT TRANSVERSE POST-TENSIONING TENDONS.

ALL BOLTS, NUTS, WASHERS, RODS, AND INSERTS FOR PIPE HANGERS AND STABILIZING STRAPS SHALL BE GALVANIZED STEEL PER MnDOT SPEC. 3392. WORKMANSHIP AND FABRICATION OF COMPONENTS SHALL BE PER MnDOT SPEC. 2471.

CONTRACTOR SHALL SUBMIT ALL SHOP DRAWINGS OF DRAINAGE SYSTEM TO THE ENGINEER FOR REVIEW AND APPROVAL. SHOP DRAWINGS SHALL SHOW COMPLETE DETAILS OF THE DRAINAGE SYSTEM INCLUDING, BUT NOT LIMITED TO, ALL ITEMS DETAILED ON THESE DRAINAGE DETAIL SHEETS.

(1) SEE CIVIL PLANS FOR DETAILS OF CONCRETE SPLASH PAD.

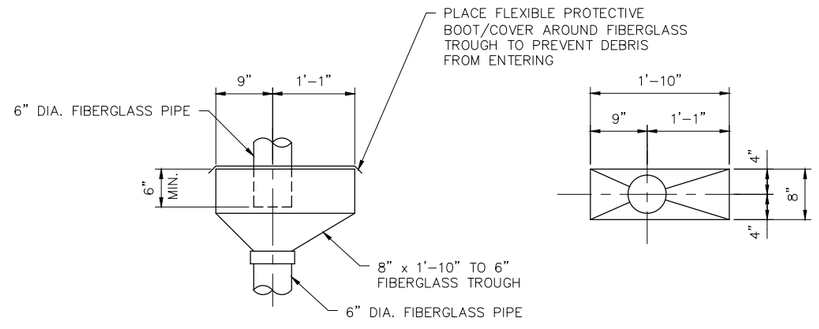

ELEVATION PLAN

DETAIL 1

NOTE:

FREE-FLOATING CONNECTION SHALL ALLOW LATERAL MOVEMENT BETWEEN THE UPPER PIPE AND THE TROUGH. PIPES SHOULD BE CENTERED AT 45° F.

NO.	DATE	BY	CHECK	DESIGN	REVISION / SUBMITTAL

DESIGNED BY: ETN CHECKED BY: JWJ
DRAWN BY: LSS CHECKED BY: JWJ

AECOM

90% SUBMISSION - 01/22/16

METROPOLITAN COUNCIL

SOUTHWEST Green Line LRT Extension

CIVIL - VOLUME 4D
EXCELSIOR BLVD
BRIDGE 27C10
DRAINAGE DETAILS 1

DISCIPLINE: STRUCTURE
SHEET NAME: CBR27C10-BRG-DTL-003

SHEET 153 OF 174

Jan, 15 2016 12:21 pm V:\3400_ADC\CAD\SEGMENT E1\PLAN SHEETS\STRUCTURES\CBR27C10\CBR27C10-BRG-DTL-003.dwg By: songers

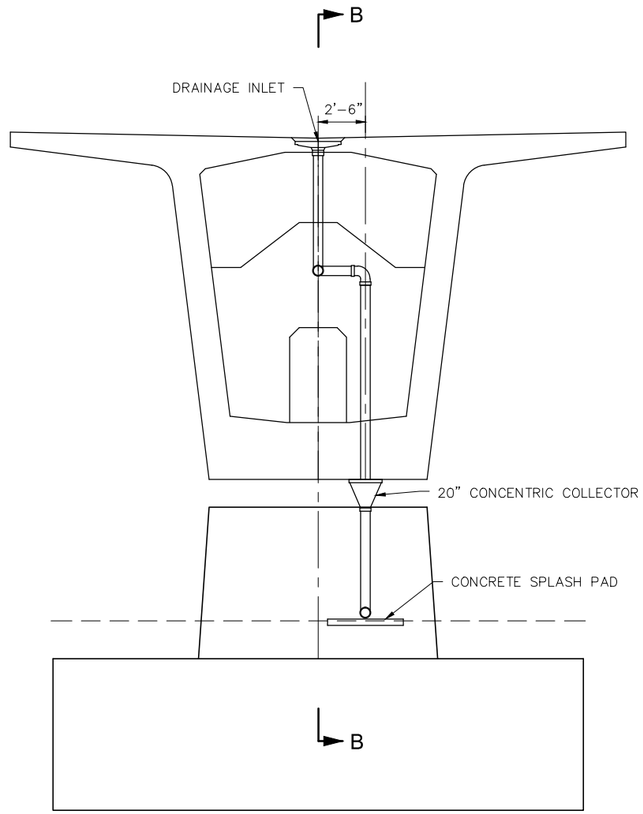

ELEVATION
(LOOKING DOWNSTATION)

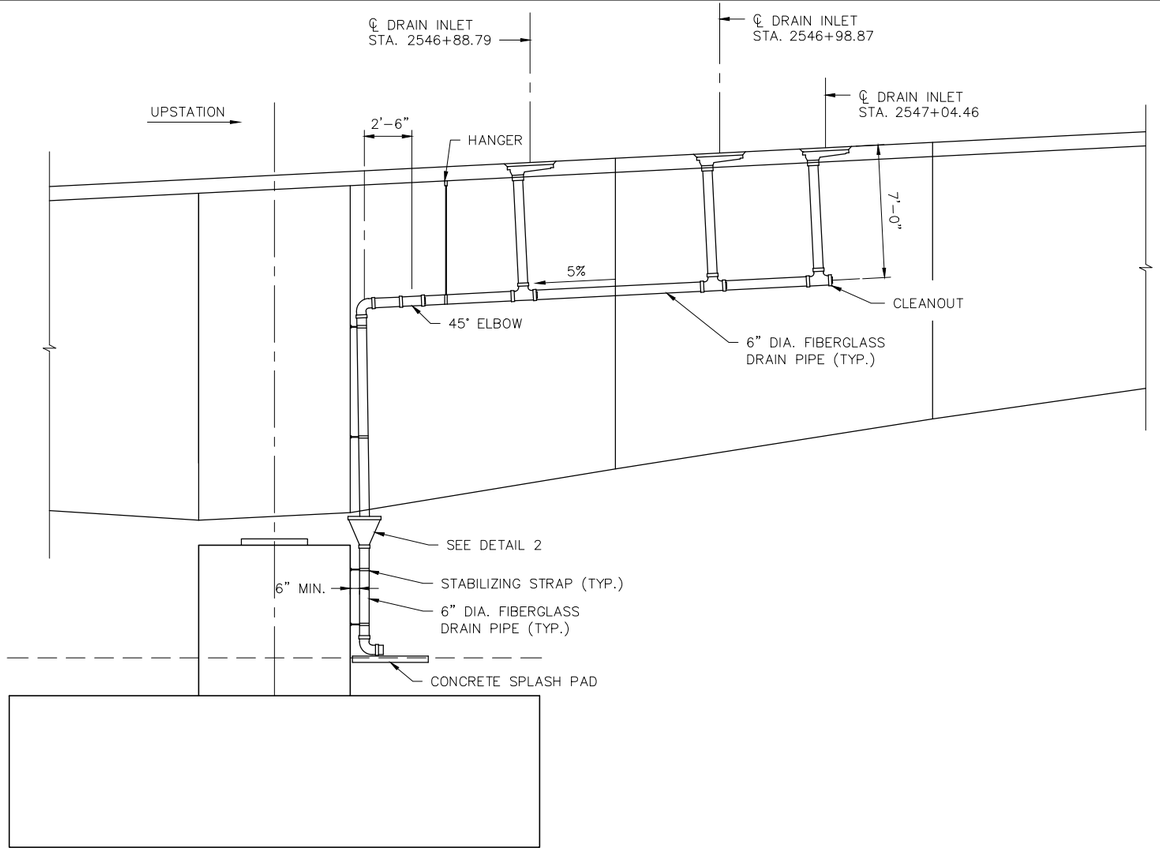

SECTION B-B

DRAIN INLETS AT PIER 1

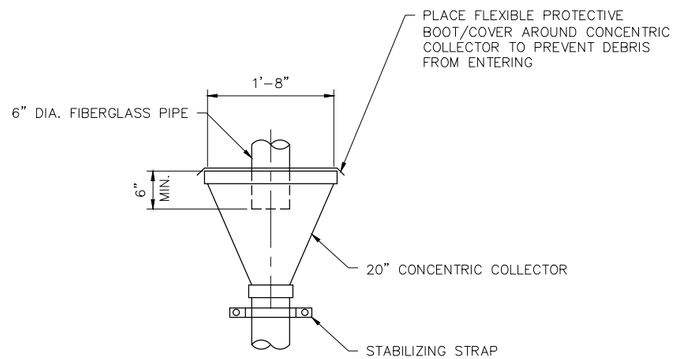

DETAIL 2

NOTE:

FREE-FLOATING CONNECTION SHALL ALLOW LATERAL MOVEMENT BETWEEN THE UPPER PIPE AND THE COLLECTOR. PIPES SHOULD BE CENTERED AT 45° F.

NO.	DATE	BY	CHECK	DESIGN	REVISION / SUBMITTAL

DESIGNED BY: ETN CHECKED BY: JWJ
DRAWN BY: LSS CHECKED BY: JWJ

AECOM

90% SUBMISSION - 01/22/16

METROPOLITAN COUNCIL

SOUTHWEST Green Line LRT Extension

CIVIL - VOLUME 4D
EXCELSIOR BLVD
BRIDGE 27C10
DRAINAGE DETAILS 2

DISCIPLINE: STRUCTURE

SHEET NAME: CBR27C10-BRG-DTL-004

SHEET 154 OF 174

Jan. 15 2016 11:46 am V:\3400_ADC\CAD\SEGMENT E1\PLAN SHEETS\STRUCTURES\CBR27C10\CBR27C10-BRG-DTL-004.dwg By: songers

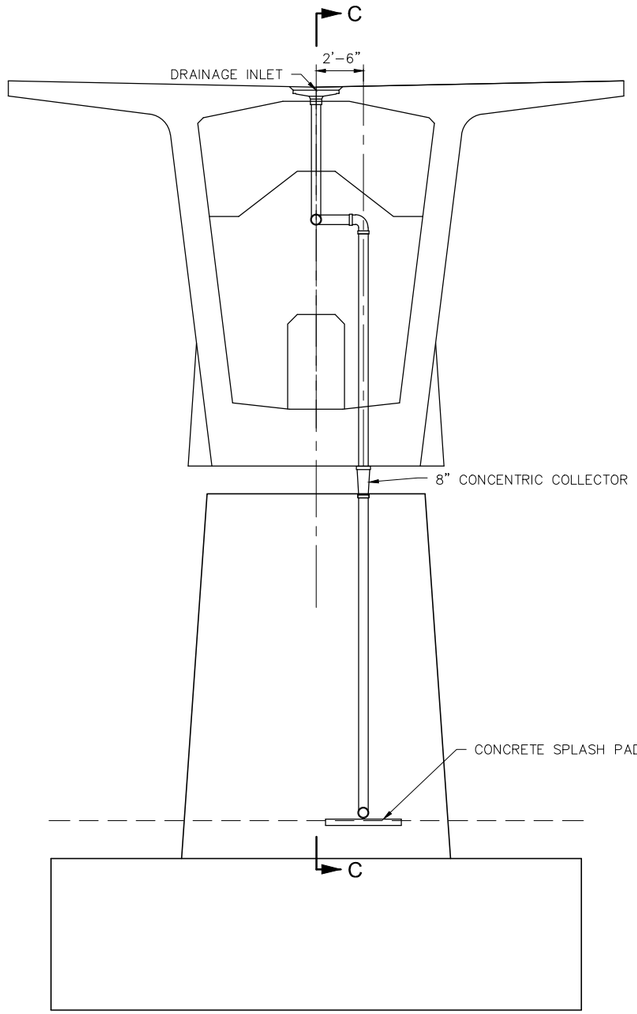

ELEVATION
(LOOKING DOWNSTATION)

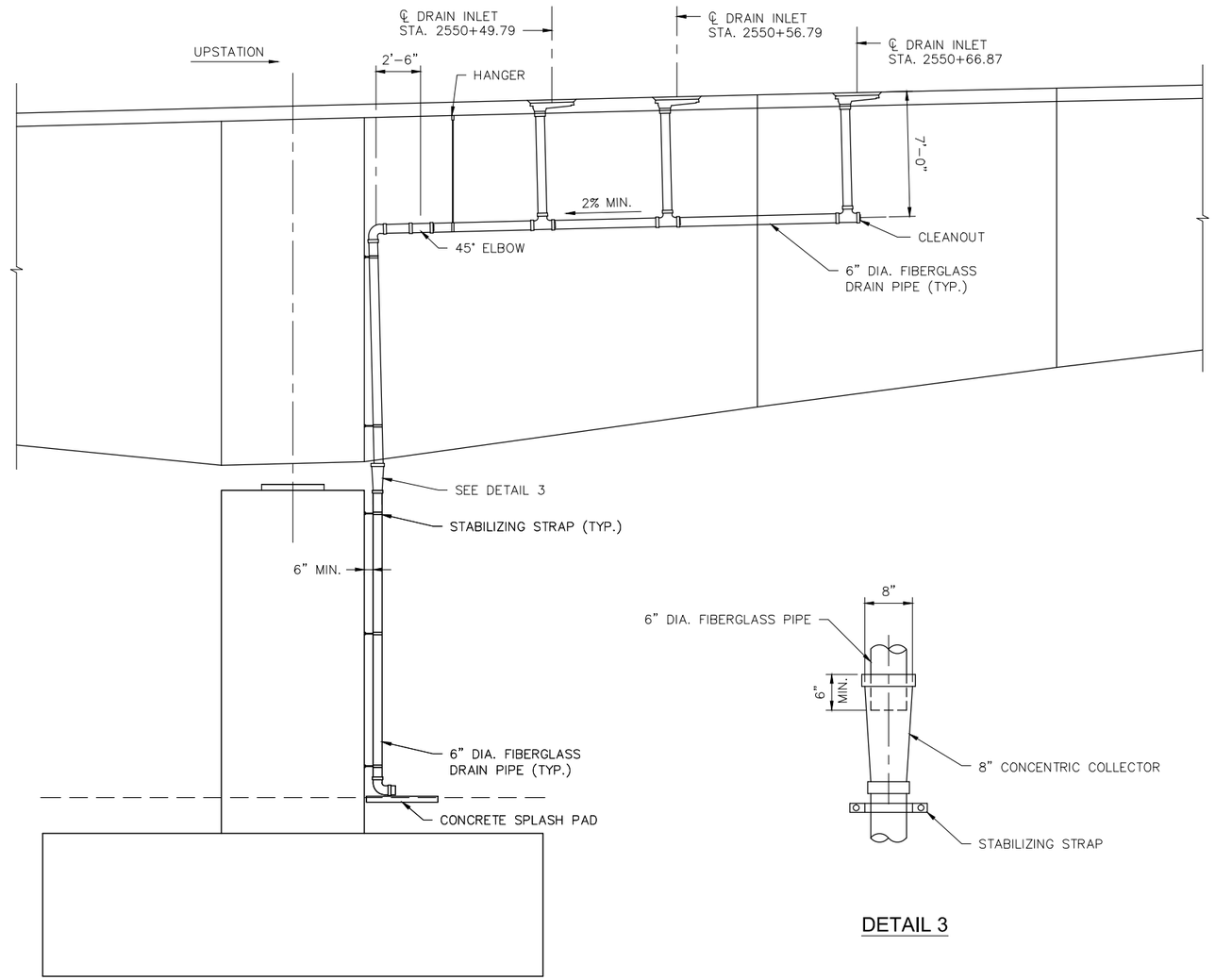

SECTION C-C

DETAIL 3

DRAIN INLETS AT PIER 2

NO.	DATE	BY	CHECK	DESIGN	REVISION / SUBMITTAL

DESIGNED BY: ETN CHECKED BY: JWJ
DRAWN BY: LSS CHECKED BY: JWJ

AECOM

90% SUBMISSION - 01/22/16

METROPOLITAN COUNCIL

SOUTHWEST
Green Line LRT Extension

CIVIL - VOLUME 4D
EXCELSIOR BLVD
BRIDGE 27C10
DRAINAGE DETAILS 3

DISCIPLINE: STRUCTURE
SHEET NAME: CBR27C10-BRG-DTL-005

SHEET 155 OF 174

Jan, 15 2016 11:48 am V:\3400_ADC\CAD\SEGMENT E1\PLAN SHEETS\STRUCTURES\CBR27C10\CBR27C10-BRG-DTL-005.dwg By: songers

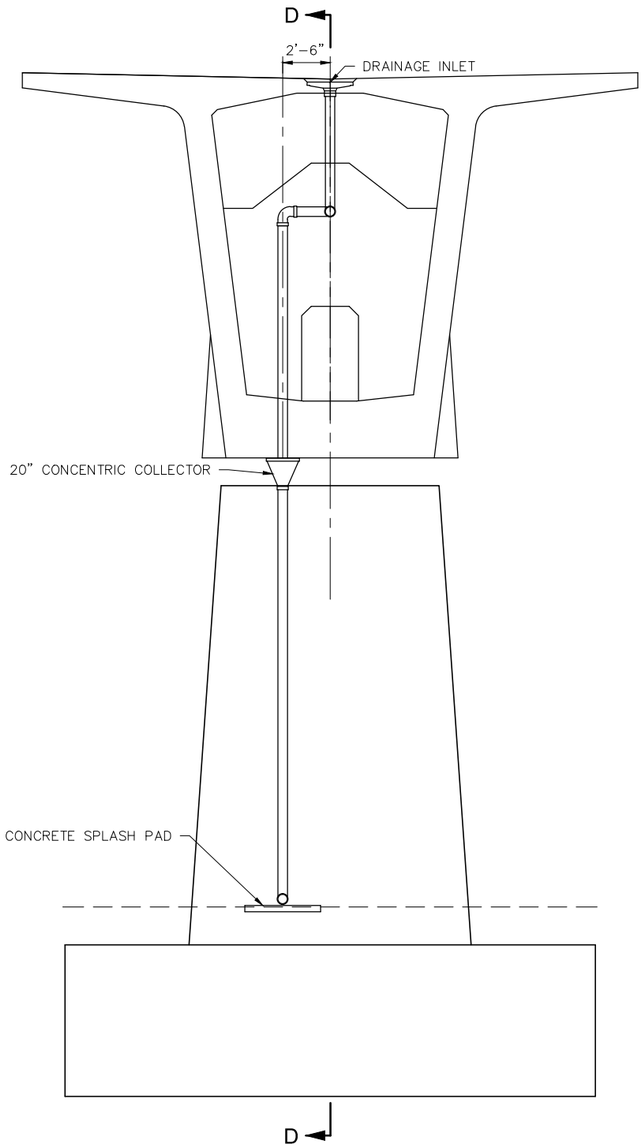

ELEVATION
(LOOKING UPSTATION)

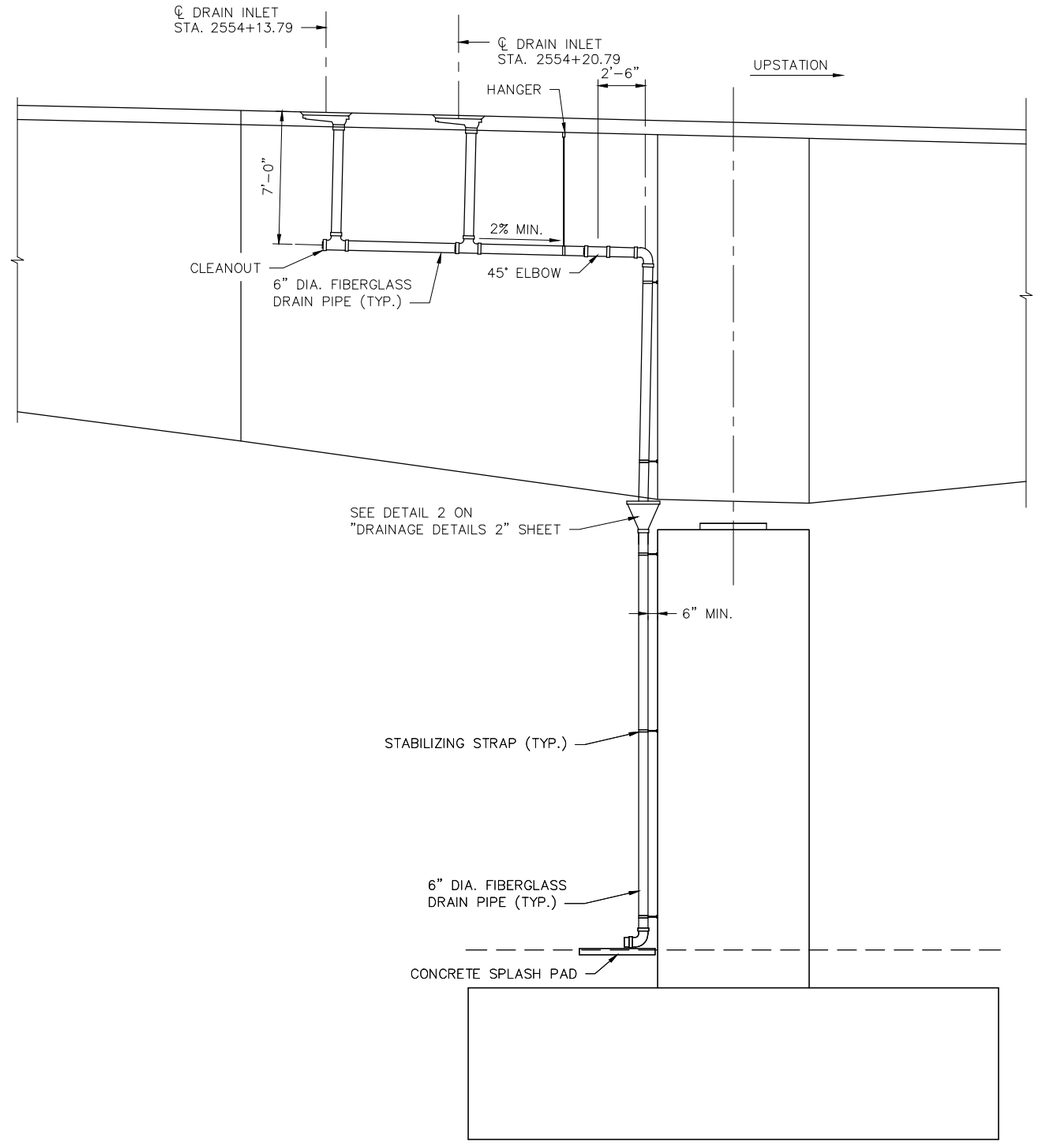

SECTION D-D

DRAIN INLETS AT PIER 3

NO.	DATE	BY	CHECK	DESIGN	REVISION / SUBMITTAL

DESIGNED BY: ETN CHECKED BY: JWJ
DRAWN BY: LSS CHECKED BY: JWJ

AECOM

90% SUBMISSION - 01/22/16

METROPOLITAN COUNCIL

SOUTHWEST Green Line LRT Extension

CIVIL - VOLUME 4D
EXCELSIOR BLVD
BRIDGE 27C10
DRAINAGE DETAILS 4

DISCIPLINE: STRUCTURE

SHEET NAME: CBR27C10-BRG-DTL-006

SHEET 156 OF 174

Jan. 15 2016 11:50 am V:\3400_ADC\CAD\SEGMENT E1\PLAN SHEETS\STRUCTURES\CBR27C10\CBR27C10-BRG-DTL-006.dwg By: songers

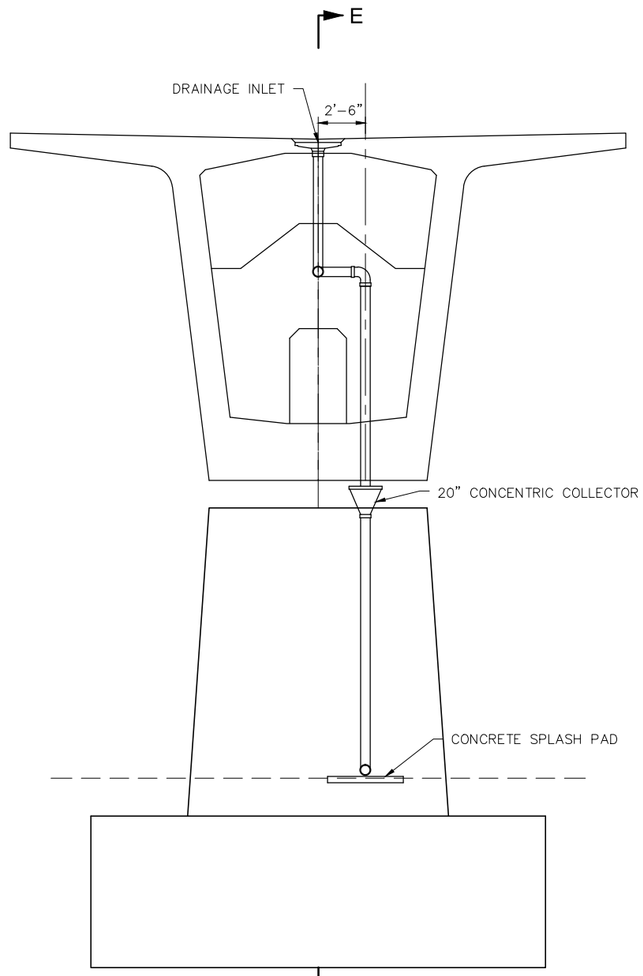

ELEVATION
(LOOKING DOWNSTATION)

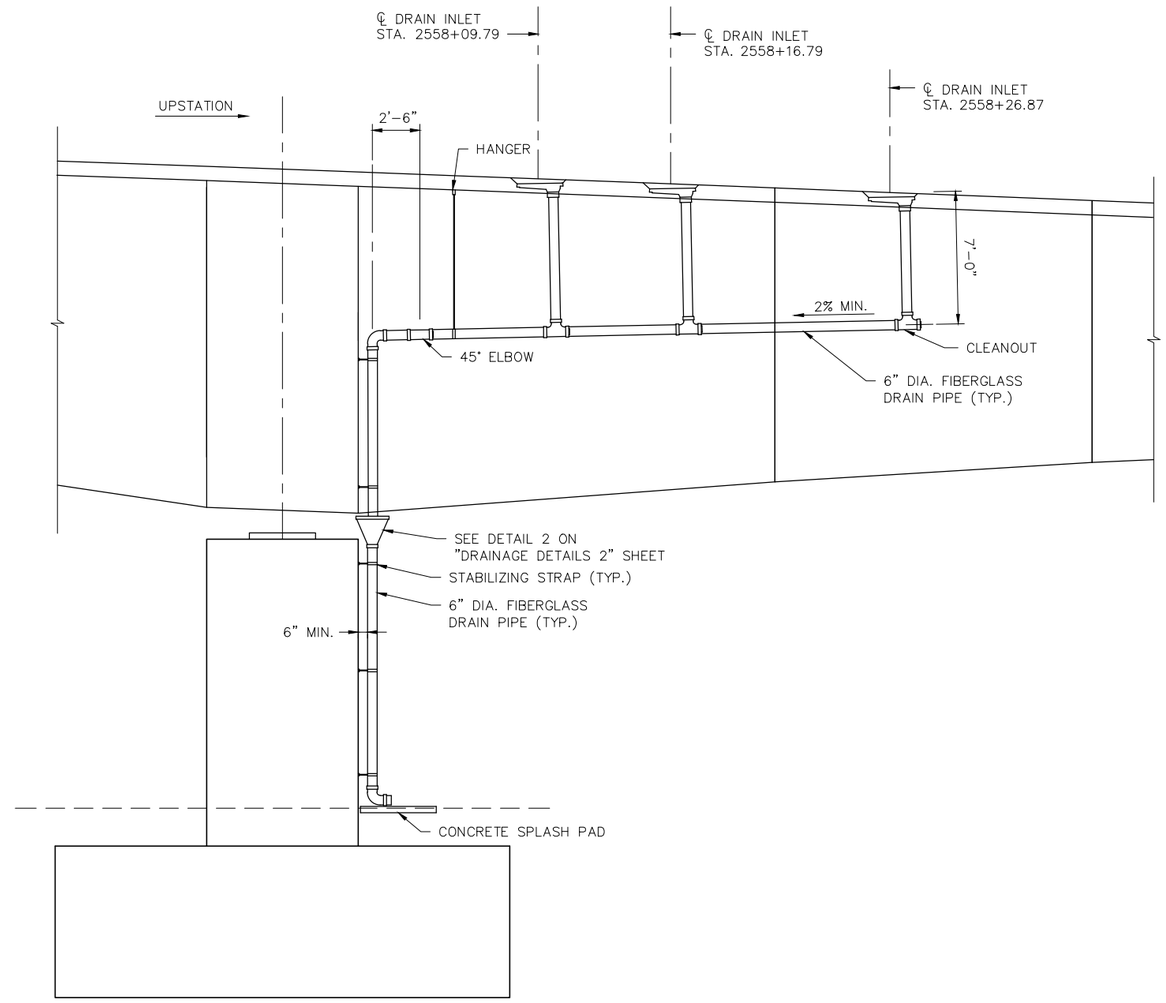

SECTION E-E

DRAIN INLETS AT PIER 4

NO.	DATE	BY	CHECK	DESIGN	REVISION / SUBMITTAL

DESIGNED BY: ETN CHECKED BY: JWJ
DRAWN BY: LSS CHECKED BY: JWJ

AECOM

90% SUBMISSION - 01/22/16

METROPOLITAN COUNCIL

SOUTHWEST Green Line LRT Extension

CIVIL - VOLUME 4D
EXCELSIOR BLVD
BRIDGE 27C10
DRAINAGE DETAILS 5

DISCIPLINE: STRUCTURE
SHEET NAME: CBR27C10-BRG-DTL-007

SHEET 157 OF 174

Jan. 15 2016 11:52 am V:\3400_ADC\CAD\SEGMENT E1\PLAN SHEETS\STRUCTURES\CBR27C10\CBR27C10-BRG-DTL-007.dwg By: songers

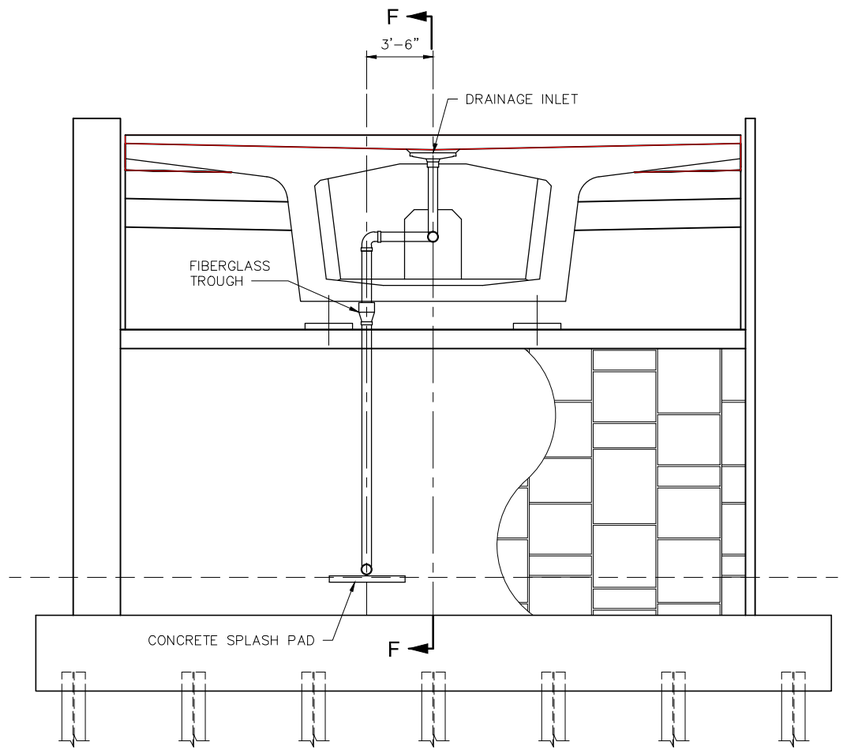

ELEVATION
(LOOKING UPSTATION)

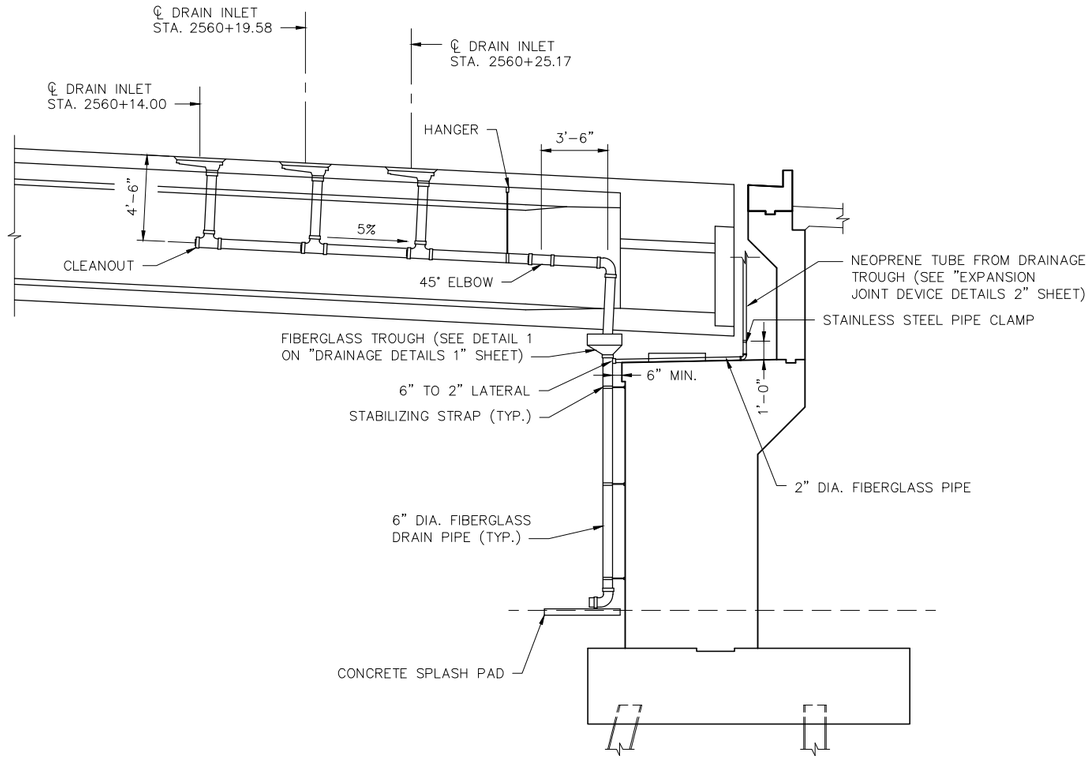

SECTION F-F

DRAIN INLETS AT EAST ABUTMENT

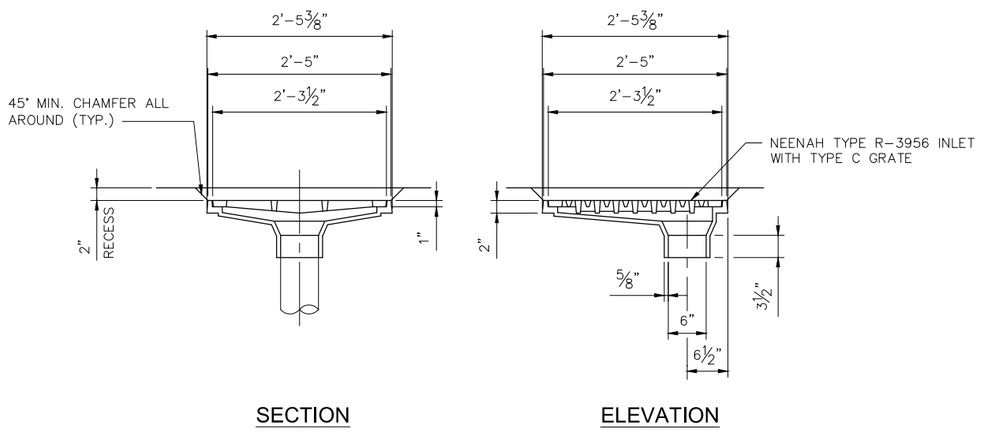

SECTION ELEVATION

DRAIN INLET DETAIL

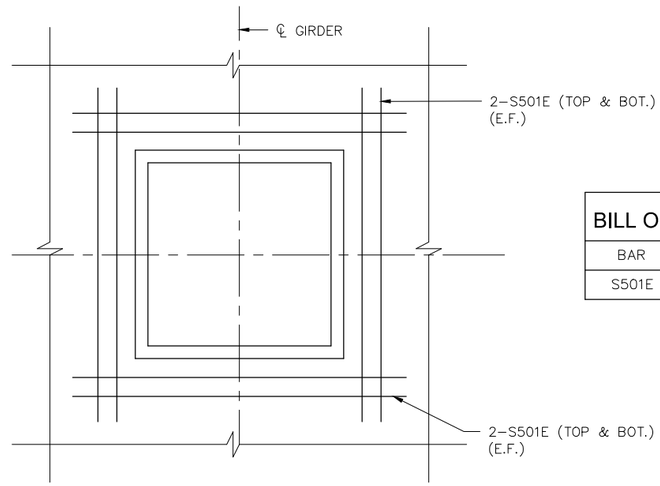

PARTIAL PLAN - TOP SLAB DRAIN INLET REINF.
(TYP. SEGMENT REINF. NOT SHOWN FOR CLARITY)

BILL OF REINFORCEMENT - ONE DRAIN INLET				
BAR	NO.	LENGTH	SHAPE	LOCATION
S501E	16	6'-0"	STR.	TOP SLAB

NOTE:

CUT AND ADJUST TYPICAL REINFORCEMENT IN TOP SLAB OF SEGMENT TO PROVIDE 2" CLEAR COVER AROUND INLET.

NO.	DATE	BY	CHECK	DESIGN	REVISION / SUBMITTAL

DESIGNED BY: ETN CHECKED BY: JWJ
DRAWN BY: LSS CHECKED BY: JWJ

AECOM

90% SUBMISSION - 01/22/16

METROPOLITAN COUNCIL

SOUTHWEST Green Line LRT Extension

CIVIL - VOLUME 4D
EXCELSIOR BLVD
BRIDGE 27C10
DRAINAGE DETAILS 6

DISCIPLINE: STRUCTURE
SHEET NAME: CBR27C10-BRG-DTL-008

SHEET 158 OF 174

Jan, 15 2016 11:54 am V:\3400_ADC\CAD\SEGMENT E1\PLAN SHEETS\STRUCTURES\CBR27C10\CBR27C10-BRG-DTL-008.dwg By: songers

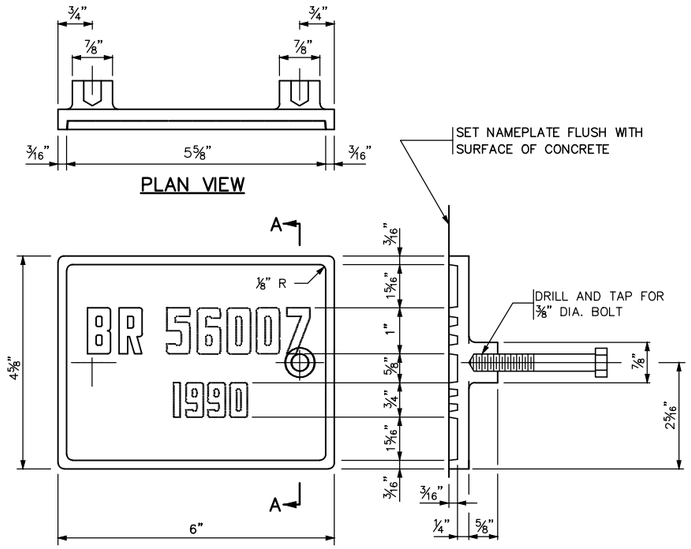

THE DASHED NUMBERS SHOWN ABOVE ARE FOR ILLUSTRATION.
DATA TO BE SHOWN ON NAMEPLATE IS AS FOLLOWS:

BRIDGE 27C10

YEAR 2019



NUMBERS FOR NAMEPLATE

NOTES:

MATERIAL SHALL COMPLY WITH SPEC. 3327.

LETTERS AND NUMBERS SHALL CONFORM TO THOSE SHOWN.

DRAFT ON LETTERS AND NUMBERS SHALL NOT BE MORE THAN 3" IN 12".

HORIZONTAL SPACING OF LETTERS AND NUMBERS SHALL PRODUCE A BALANCED LAYOUT IN PROPORTION TO SPACING SHOWN.

TOP SURFACE OF LETTERS, NUMBERS AND FRAMES SHALL BE BURNISHED.

FURNISH 2 STEEL BOLTS 3/8" DIA. x 3" LONG WITH EACH PLATE.

ALL DIMENSIONS FOR 3/4" HIGH LETTERS AND NUMBERS SHALL BE IN DIRECT PROPORTION TO THOSE SHOWN FOR THE 1" HIGH LETTERS AND NUMBERS.

Daniel L Dorgan STATE BRIDGE ENGINEER	STATE OF MINNESOTA DEPARTMENT OF TRANSPORTATION BRIDGE NAMEPLATE (FOR NEW BRIDGES)	REVISION 09–11–2014	DETAIL NO. B101

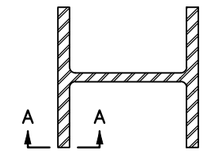

SECTION AT SPLICE

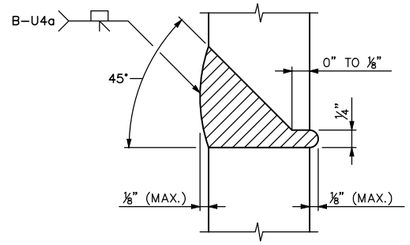

SECTION A–A

100% BUTT WELDED PILE SPLICE

NOTES:

CELLULOSIC TYPE ELECTRODES E–6010 OR E–6011 SHALL BE USED FOR 100% BUTT WELDED SPLICES.

ELECTRODES WHICH HAVE BECOME WET, SOILED OR DAMAGED SHALL NOT BE USED.

WELDING SHALL NOT BE DONE WHEN THE AMBIENT TEMPERATURE IS LOWER THAN 0° F. OR WHEN THE PILE IS WET OR EXPOSED TO FALLING RAIN OR SNOW. WHEN THE PILE METAL TEMPERATURE IS BELOW 32° F., THE PILE METAL IN THE AREA OF THE WELD SHALL BE HEATED TO A MINIMUM TEMPERATURE OF 70° F. AND MAINTAINED AT THIS TEMPERATURE DURING WELDING.

Daniel L Dorgan STATE BRIDGE ENGINEER	STATE OF MINNESOTA DEPARTMENT OF TRANSPORTATION PILE SPLICE (STEEL H BEARING PILES 10" TO 14")	REVISION: 11–06–2013	DETAIL NO. B202

NO.	DATE	BY	CHECK	DESIGN	REVISION / SUBMITTAL

DESIGNED BY: ETN CHECKED BY: JWJ
DRAWN BY: EAN CHECKED BY: JWJ

AECOM

90% SUBMISSION - 01/22/16

METROPOLITAN COUNCIL

SOUTHWEST Green Line LRT Extension

CIVIL - VOLUME 4D
EXCELSIOR BLVD
BRIDGE 27C10
BRIDGE DETAILS 1

DISCIPLINE: STRUCTURE

SHEET NAME: CBR27C10-BRG-DTL-009

Jan, 18 2016 02:52 pm V:\3400_ADC\CAD\SEGMENT E1\PLAN SHEETS\STRUCTURES\CBR27C10\CBR27C10-BRG-DTL-009.dwg By: songers

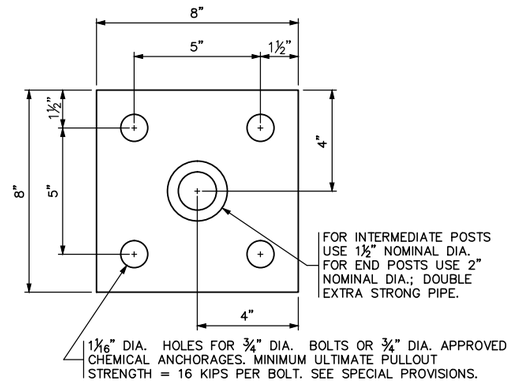

PLAN VIEW – TYPE A

ESTIMATED WEIGHT = 12 OR 14 LBS.

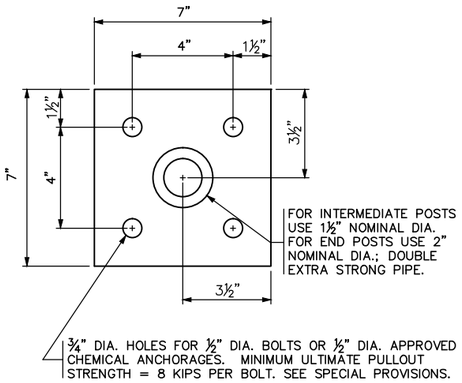

PLAN VIEW – TYPE B

ESTIMATED WEIGHT = 10 OR 12 LBS.

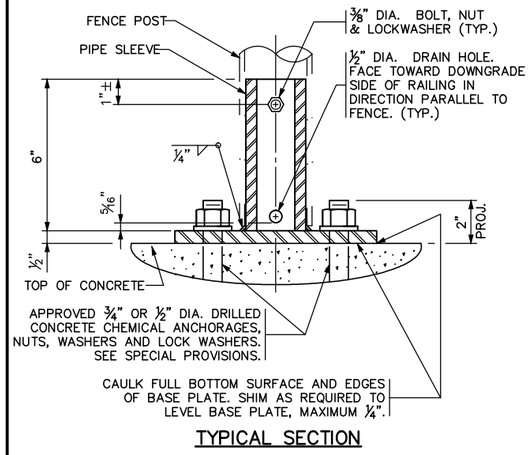

TYPICAL SECTION

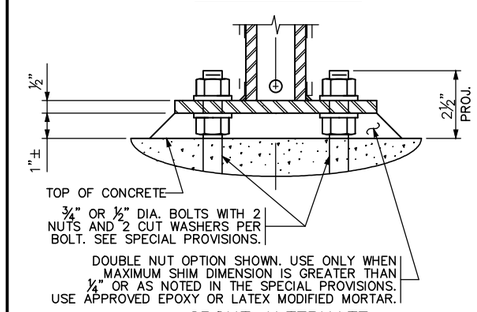

GROUT ALTERNATE

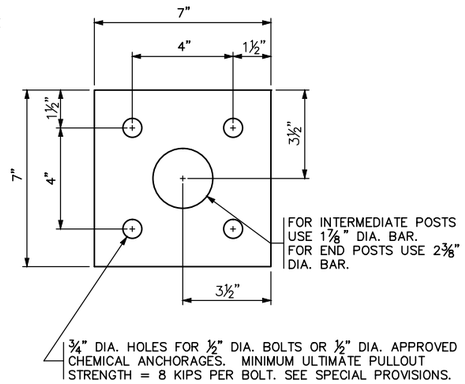

PLAN VIEW – TYPE C

ESTIMATED WEIGHT = 12 OR 15 LBS.

NOTES:

STRUCTURAL STEEL PER Mn/DOT SPEC. 3306

STRUCTURAL PIPE PER Mn/DOT SPEC. 3362

GALVANIZE THE FENCE POST ANCHORAGE AFTER FABRICATION PER Mn/DOT SPEC. 3394. GALVANIZE THE FASTENERS PER Mn/DOT SPEC. 3392.

DOUBLE EXTRA STRONG PIPE WEIGHTS:
1" NOMINAL DIA. = 6.41 LBS./FT.
2" NOMINAL DIA. = 9.03 LBS./FT.

APPROVED: NOVEMBER 22, 2002	STATE OF MINNESOTA DEPARTMENT OF TRANSPORTATION	REVISION	DETAIL NO.
Daniel J. Wogsyan STATE BRIDGE ENGINEER	FENCE POST ANCHORAGE		B905

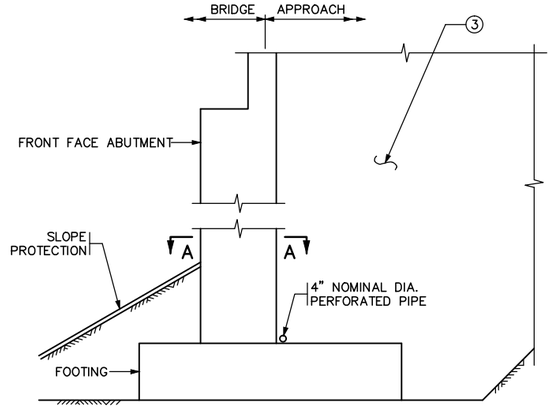

SECTION THROUGH PARAPET AND SEMI–INTEGRAL ABUTMENTS

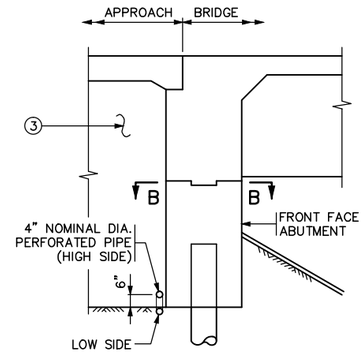

SECTION THROUGH INTEGRAL ABUTMENT

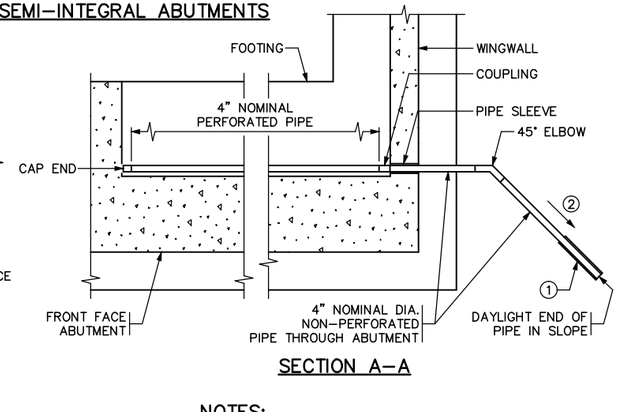

SECTION A–A

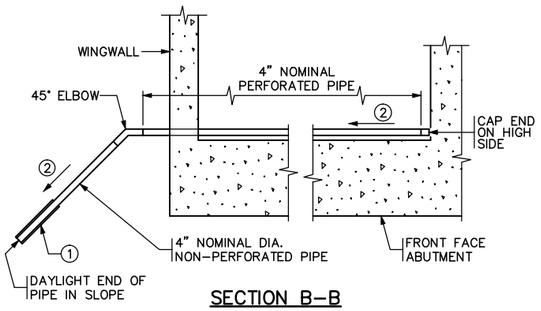

SECTION B–B

NOTES:

PAYMENT WILL BE INCLUDED IN THE SINGLE LUMP SUM PRICE FOR "DRAINAGE SYSTEM TYPE (B910)", INCLUDES BUT IS NOT LIMITED TO 4" DIAMETER PERFORATED AND NON–PERFORATED PIPE, ELBOWS, END CAPS, COUPLINGS, SLEEVES AND PRECAST CONCRETE HEADWALLS.

ALL PIPE TO COMPLY WITH SPEC. 3245.

WRAP PERFORATED PIPE WITH GEOTEXTILE PER SPEC. 3733, TYPE 1. ATTACH TO PIPE PER SPEC. 2502.

① AT CONTRACTOR'S OPTION, MAY TIE APPROACH PANEL DRAINAGE SYSTEM AND ABUTMENT DRAINAGE SYSTEM INTO A SINGLE PRECAST CONCRETE HEADWALL OR INTO A CATCH BASIN AS LONG AS A MINIMUM OF 1% POSITIVE SLOPE CAN BE MAINTAINED.

USE PRECAST CONCRETE HEADWALL WITH RODENT SCREEN. SEE STANDARD PLATE 3131 FOR DETAILS.

② ." PER FT. MINIMUM SLOPE.

③ REFER TO GRADING PLANS FOR ABUTMENT BACKFILL REQUIREMENTS.

APPROVED: JANUARY 13, 2015	STATE OF MINNESOTA DEPARTMENT OF TRANSPORTATION	REVISED 12–02–2015	DETAIL NO.
Nancy Daubenberger STATE BRIDGE ENGINEER	DRAINAGE SYSTEM		B910

NO.	DATE	BY	CHECK	DESIGN	REVISION / SUBMITTAL

DESIGNED BY: ETN CHECKED BY: JWJ
DRAWN BY: EAN CHECKED BY: JWJ

AECOM

90% SUBMISSION - 01/22/16

METROPOLITAN COUNCIL

SOUTHWEST Green Line LRT Extension

CIVIL - VOLUME 4D
EXCELSIOR BLVD
BRIDGE 27C10
BRIDGE DETAILS 2

DISCIPLINE: STRUCTURE
SHEET NAME: CBR27C10-BRG-DTL-010

SHEET 160 OF 174

Jan, 18 2016 02:53 pm V:\3400_ADC\CAD\SEGMENT E1\PLAN SHEETS\STRUCTURES\CBR27C10\CBR27C10-BRG-DTL-010.dwg By: songers

CONCRETE WEARING COURSE

☐ LOW SLUMP

☐ OTHER _____
TYPE OR MANUFACTURER

EXPANSION JOINTS

JOINT MANUFACTURER

MANUFACTURER'S IDENTIFICATION _____
MFR'S No. AND/OR LETTER DESIGNATION FOR JOINT USED

GLAND MANUFACTURER _____
NAME AND ADDRESS (CITY, STATE)

SIZE OF GLAND _____

MANUFACTURER'S IDENTIFICATION _____
MFR'S No. AND/OR LETTER DESIGNATION FOR GLAND USED

ELASTOMERIC BEARING PADS

PAD MANUFACTURER _____
NAME AND ADDRESS (CITY, STATE)

SPECIAL SURFACE FINISH

SYSTEM: _____ COLOR: _____

FINISHING ROADWAY FACES OF BARRIER RAILING

TYPE: _____ COLOR: _____

ANTI–GRAFFITI COATING

MANUFACTURER _____
NAME AND ADDRESS (CITY, STATE)

PRODUCT NAME: _____ LOCATION: _____

PAINT SYSTEM

Mn/DOT SPECIFICATION NUMBER _____
2478 OR 2479 OR OTHER

MANUFACTURER _____
NAME AND ADDRESS (CITY, STATE)

PRIME COAT _____
Mn/DOT MATERIAL SPECIFICATION NUMBER

INTERMEDIATE COAT _____
Mn/DOT MATERIAL SPECIFICATION NUMBER

FINISH COAT _____ _____
Mn/DOT MATERIAL SPECIFICATION NUMBER COLOR

PLAN QUALITY

RATE 1 (AGREE), 2 (NEUTRAL), OR 3 (DISAGREE, PLEASE COMMENT BELOW)

DIMENSIONING AND DETAILING ADEQUATELY DESCRIBED REQUIRED CONSTRUCTION. _____
BAR LISTS AND QUANTITIES WERE TYPICALLY COMPLETE AND FREE OF ERRORS. _____
SCALE OF DRAWINGS AND OVERALL LEGIBILITY OF LINES AND TEXT WAS GOOD. _____
(SB) SPECIAL PROVISIONS ADEQUATELY DESCRIBED SPECIAL WORK AND PAYMENT. _____

COMMENTS: _____

NUMBER OF BRIDGE
SUPPLEMENTAL AGREEMENTS: _____ COST: $ _____

LIST SIGNIFICANT ERRORS OR OMISSIONS IN PLAN DETAILS OR PAY QUANTITIES IN THE SPACE PROVIDED AT RIGHT.

BRIDGE REMOVAL / BRIDGE OPENING

NUMBER OF AND DATE OLD BRIDGE WAS REMOVED (IF APPLICABLE):

BRIDGE NUMBER _____ DATE REMOVED _____

DATE NEW BRIDGE WAS OPENED TO TRAFFIC _____

NOTIFY THE BRIDGE OFFICE BRIDGE MANAGEMENT UNIT WITH THIS INFORMATION AS SOON AS POSSIBLE. (651) 366-4557

OTHER ITEMS ①

① UTILITIES ADDED DURING CONSTRUCTION AND SPECIALTY ITEMS.

FINAL QUANTITIES ENTERED ON SCHEDULE OF QUANTITIES: YES ☐ NO ☐

SUMMARY OF SIGNIFICANT AS–BUILT CHANGES

THE AS–BUILT INFORMATION WAS ADDED TO THE PLAN BY:

_____ _____
INSPECTOR(S) SIGNATURE DATE

CHECKED BY: _____ _____
PROJECT ENGINEER/SUPERVISOR SIGNATURE DATE

AT THE TIME OF THE FINAL, THIS COMPLETED AS-BUILT BRIDGE DATA SHEET MUST BE SUBMITTED TO THE BRIDGE OFFICE - ATTN: REGIONAL CONSTRUCTION ENGINEER (MS610).

REVISION: 10–28–2008

APPROVED: SEPTEMBER 26, 2003
STATE BRIDGE ENGINEER

AS–BUILT DETAILS
(AS NEEDED)

FIG. 5–397.900

TITLE:					
AS–BUILT BRIDGE DATA	DES: ETN	DR: EAN	APPROVED:	BRIDGE NO. 27C10
	CHK: JWJ	CHK: JWJ		
	SHEET NO. 161 OF 174 SHEETS			

CONTRACTED PROFILE

SCALE HOR: 0 100' 200'

SCALE VER: 0 20' 40'

PROFILE GRADE @ ℄ TRACK 2 (FG–EB–TRK–E1)

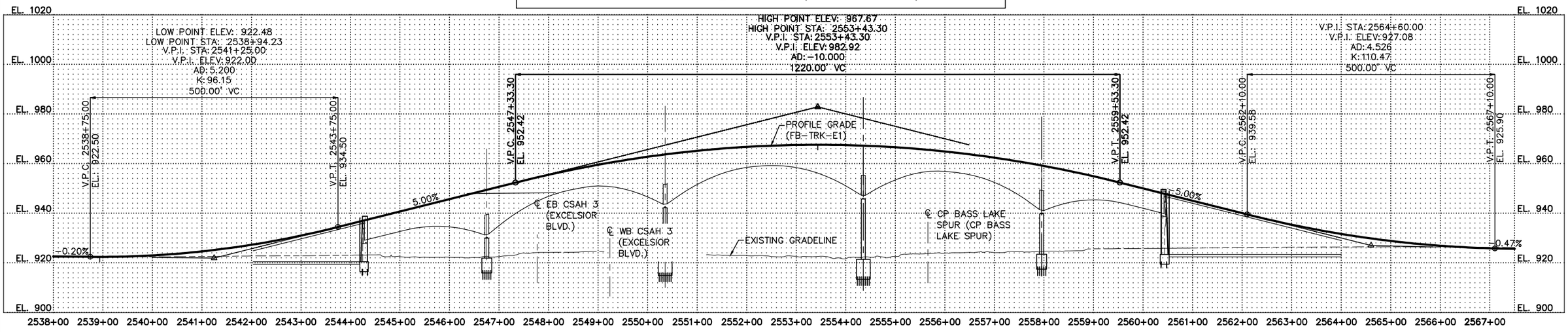

PLAT

SCALE HOR: 0 200'

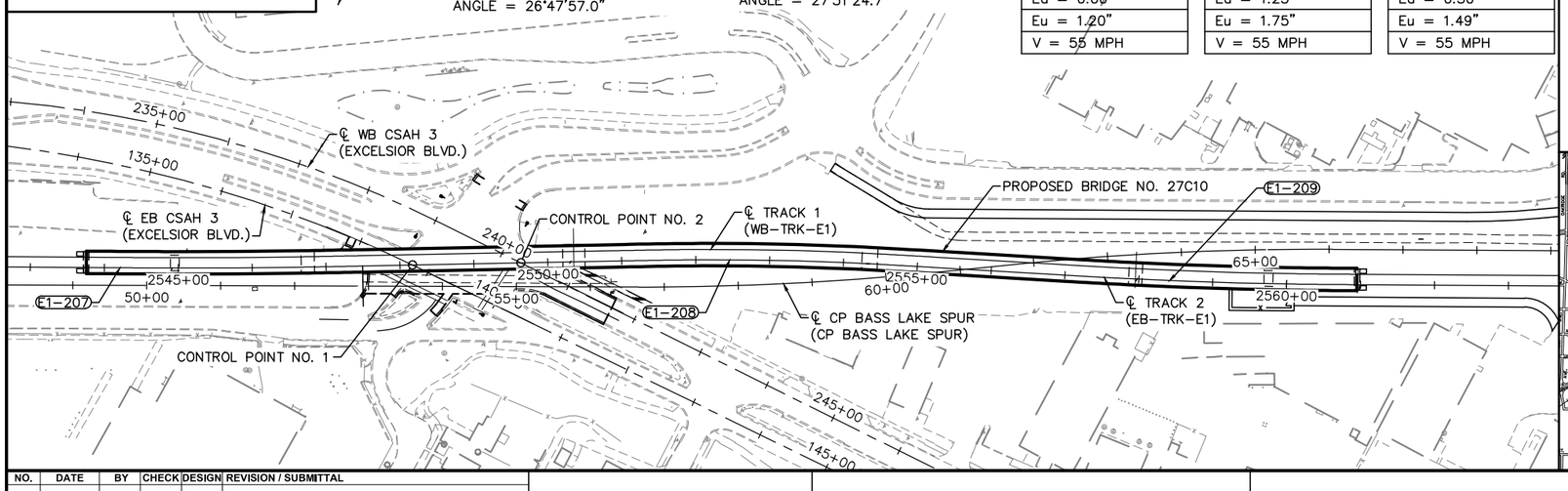

CURVE NO. E1–207	
R	10,014.00'
Lc	150.74'
Ls	80.00'
Ea	0.00"
Eu	1.20"
V	55 MPH

CURVE NO. E1–208	
R	4,000.00'
Lc	194.16'
Ls	120.00'
Ea	1.25"
Eu	1.75"
V	55 MPH

CURVE NO. E1–209	
R	6,014.00'
Lc	224.89'
Ls	90.00'
Ea	0.50"
Eu	1.49"
V	55 MPH

INDEX MAP

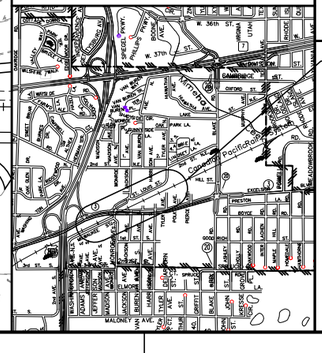

BRIDGE SURVEY SHEETS MADE FROM 2014 MFRA SURVEYS

1ST BENCHMARK (NAVD 88)
BENCHMARK ID PT. 99
ELEVATION = 920.01'
NORTHING = 148504.575'
EASTING = 496237.409'
DESCRIPTION = MAG NAIL IN BIT.

2ND BENCHMARK (NAVD 88)
BENCHMARK ID PT. 100
ELEVATION = 921.79'
NORTHING = 148866.378'
EASTING = 496673.898'
DESCRIPTION = MAG NAIL IN BIT. PATH

BRIDGE SURVEY

SOUTHWEST LRT OVER CSAH 3 (EXCELSIOR BLVD)
0.2 MI N.E. OF JCT. OF COUNTY ROAD 3 AND US–169
IN HOPKINS, MN.

250'+360'+400'+360'+250'=1,620'
PRESTRESSED CONCRETE
BOX GIRDER CONTINUOUS SPANS
32'–6" RAILWAY

SEC 20 T 117N R 21W

CITY OF HOPKINS HENNEPIN COUNTY

BRIDGE 27C10

NO.	DATE	BY	CHECK	DESIGN	REVISION / SUBMITTAL

DESIGNED BY: ETN CHECKED BY: JWJ

DRAWN BY: JAS CHECKED BY: JWJ

AECOM

90% SUBMISSION - 01/22/16

METROPOLITAN COUNCIL

SOUTHWEST Green Line LRT Extension

CIVIL - VOLUME 4D
EXCELSIOR BLVD
BRIDGE 27C10
BRIDGE SURVEY 1

DISCIPLINE: STRUCTURE

SHEET NAME: CBR27C10-BRG-SUR-001

SHEET 162 OF 174

Jan, 15 2016 10:55 am C:\Users\Hodges\appdata\local\temp\AcPublish_8972\CBR27C10-BRG-SUR-001.dwg By: hodgesj

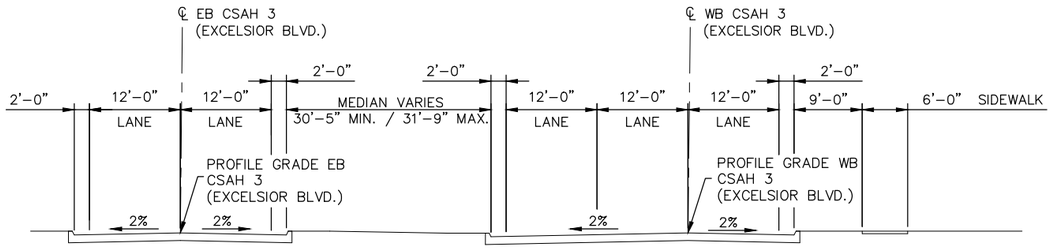

TYPICAL SECTION EXCELSIOR BLVD

(EXCELSIOR BLVD.)

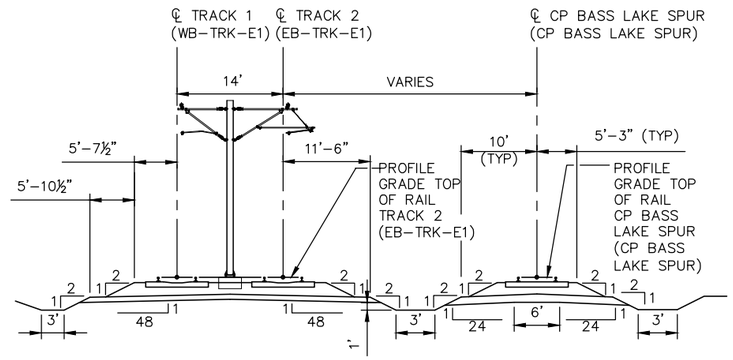

TYPICAL APPROACH SECTION CP BASS LAKE SPUR

LOCATION ENGINEER'S OBSERVATIONS AT BRIDGE SITE

1. SPECIAL FEATURES: WATERFALLS, DAMS, FLOODS, ICE, DEBRIS SLIDING BANKS, RECREATIONAL BOATING.
2. OTHER BRIDGES OR CULVERTS OVER THE SAME STREAM (PARTICULARY STRUCTURES WHICH CARRY HIGH WATER WITHOUT OVERFLOW OF ROADWAY): GIVEN LOCATION, TYPE, LENGTH, HEIGHT ABOVE HIGH WATER, CROSS–SECTIONAL AREA ETC.
3. APPARENT HIGHWATER ELEVATION OBTAINED FROM:
4. OTHER DATA: APPROX. VELOCITY OF WATER AT TIME OF SURVEY.

HYDRAULIC ENGINEER'S RECOMMENDATION

DATE:

STREAM OR DITCH DESIGNATION

DRAINAGE AREA

MAX FLOOD ON RECORD

DESIGN FLOOD (YR. FREQ.): C.F.S.
HEADWATER ELEVATION: FT.
DESIGN MEAN VELOCITY THROUGH STRUCTURE F.P.S.
TOTAL STAGE INCREASE FT.
LOW MEMBER AT OR ABOVE ELEVATION FT.

WATERWAY AREA REQUIRED BELOW ELEV. = SQ. FT.
AT RIGHT ANGLES TO CHANNEL

BASIC FLOOD (100 YR. FREQ.) C.F.S.
HEADWATER ELEVATION: FT.
TOTAL STAGE INCREASE FT.
MEAN VELOCITY THROUGH STRUCTURE

FLOWLINE ELEVATION: FT. SKEW ANGLE:

ESTIMATED PRLIMINARY TOTAL SCOUR AT PIER EL.
(500 OR OT YR. FREQ.)

CONTRACTED PROFILE

SCALE HOR: 0 100' 200'

SCALE VER: 0 20' 40'

PROFILE GRADE @ ℄ CP BASS LAKE SPUR (FG–CP BASS LAKE SPUR)

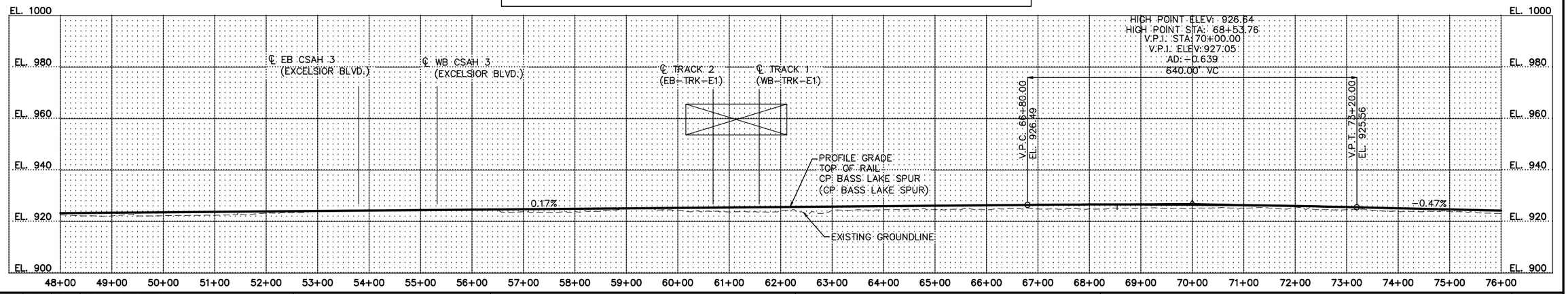

NO.	DATE	BY	CHECK	DESIGN	REVISION / SUBMITTAL

DESIGNED BY: ETN CHECKED BY: JWJ
DRAWN BY: JAS CHECKED BY: JWJ

AECOM

90% SUBMISSION - 01/22/16

METROPOLITAN COUNCIL

SOUTHWEST Green Line LRT Extension

CIVIL - VOLUME 4D
EXCELSIOR BLVD
BRIDGE 27C10
BRIDGE SURVEY 2

DISCIPLINE: STRUCTURE

SHEET NAME: CBR27C10-BRG-SUR-002

SHEET 163 OF 174

Jan, 15 2016 11:22 am V:\3400_ADC\CAD\SEGMENT E1\PLAN SHEETS\STRUCTURES\CBR27C10\CBR27C10-BRG-SUR-002.dwg By: hodgesj

GUTTER LINE @ EB CSAH 3 AND MILWAUKEE ST.

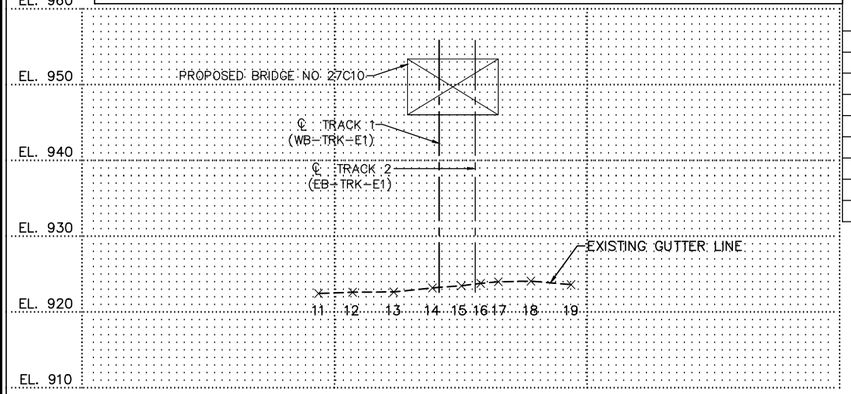

SURVEY POINTS

POINT	COORDINATES		ELEVATIONS
	X	Y	
#11	496514.683	148614.036	922.52
#12	496529.627	148615.086	922.68
#13	496547.766	148615.714	922.72
#14	496564.566	148613.517	923.25
#15	496575.401	148606.790	923.53
#16	496582.813	148602.789	923.85
#17	496585.278	148595.428	924.06
#18	496590.854	148582.342	924.15
#19	496590.797	148564.712	923.68

GUTTER LINE @ WB CSAH 3 AND ACCESS ROAD

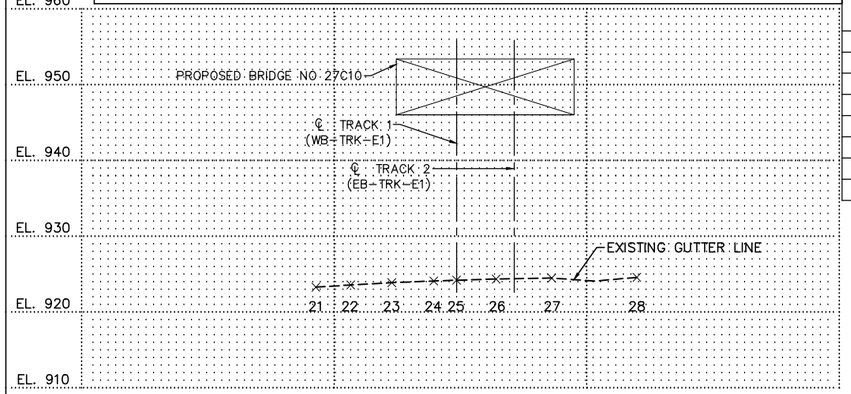

SURVEY POINTS

POINT	COORDINATES		ELEVATIONS
	X	Y	
#21	496738.969	148747.510	923.34
#22	496745.751	148733.778	923.63
#23	496758.693	148721.167	923.94
#24	496775.597	148713.706	924.15
#25	496785.401	148712.548	924.26
#26	496802.778	148712.399	924.41
#27	496827.269	148712.373	924.54
#28	496864.667	148711.804	924.63

℄ EB CSAH 3 (EXCELSIOR BLVD)

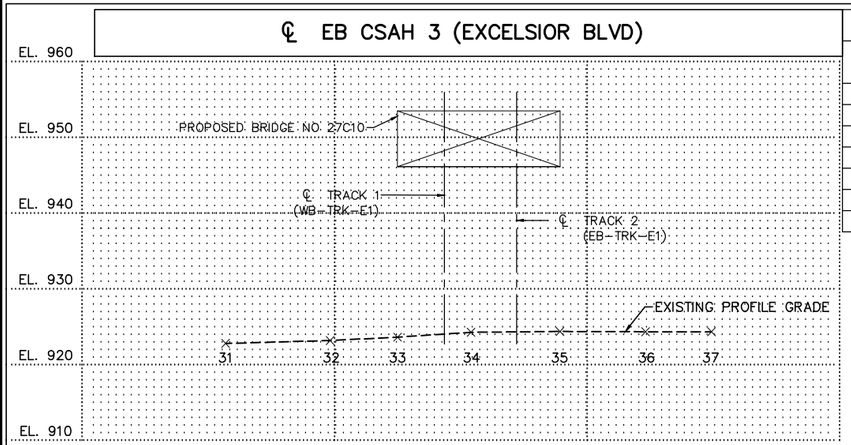

SURVEY POINTS

POINT	COORDINATES		ELEVATIONS
	X	Y	
#31	496507.136	148626.672	922.80
#32	496553.035	148629.080	923.18
#33	496582.614	148630.554	923.63
#34	496615.033	148630.792	924.27
#35	496654.154	148631.060	924.36
#36	496691.750	148630.828	924.32
#37	496720.780	148631.384	924.32

℄ WB CSAH 3 (EXCELSIOR BLVD)

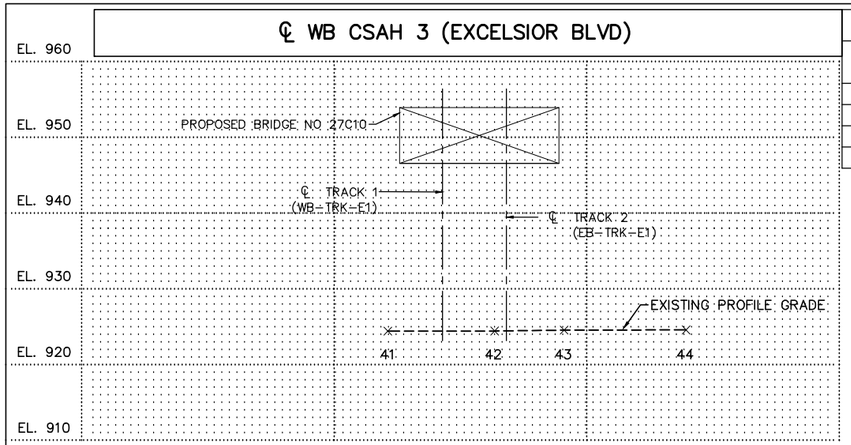

SURVEY POINTS

POINT	COORDINATES		ELEVATIONS
	X	Y	
#41	496710.836	148699.074	924.46
#42	496757.785	148698.841	924.47
#43	496788.410	148698.213	924.59
#44	496842.030	148697.851	924.62

CONTRACTED PROFILE

SCALE HOR: 0 100' 200'

SCALE VER: 0 10' 20'

NO.	DATE	BY	CHECK	DESIGN	REVISION / SUBMITTAL

DESIGNED BY: ETN | CHECKED BY: JWJ

DRAWN BY: JAS | CHECKED BY: JWJ

AECOM

90% SUBMISSION - 01/22/16

METROPOLITAN COUNCIL

SOUTHWEST Green Line LRT Extension

CIVIL - VOLUME 4D
EXCELSIOR BLVD
BRIDGE 27C10
BRIDGE SURVEY 3

DISCIPLINE: STRUCTURE

SHEET NAME: CBR27C10-BRG-SUR-003

SHEET 164 OF 174

Jan, 15 2016 11:33 am V:\3400_ADC\CAD\SEGMENT E1\PLAN SHEETS\STRUCTURES\CBR27C10\CBR27C10-BRG-SUR-003.dwg By: hodgesj

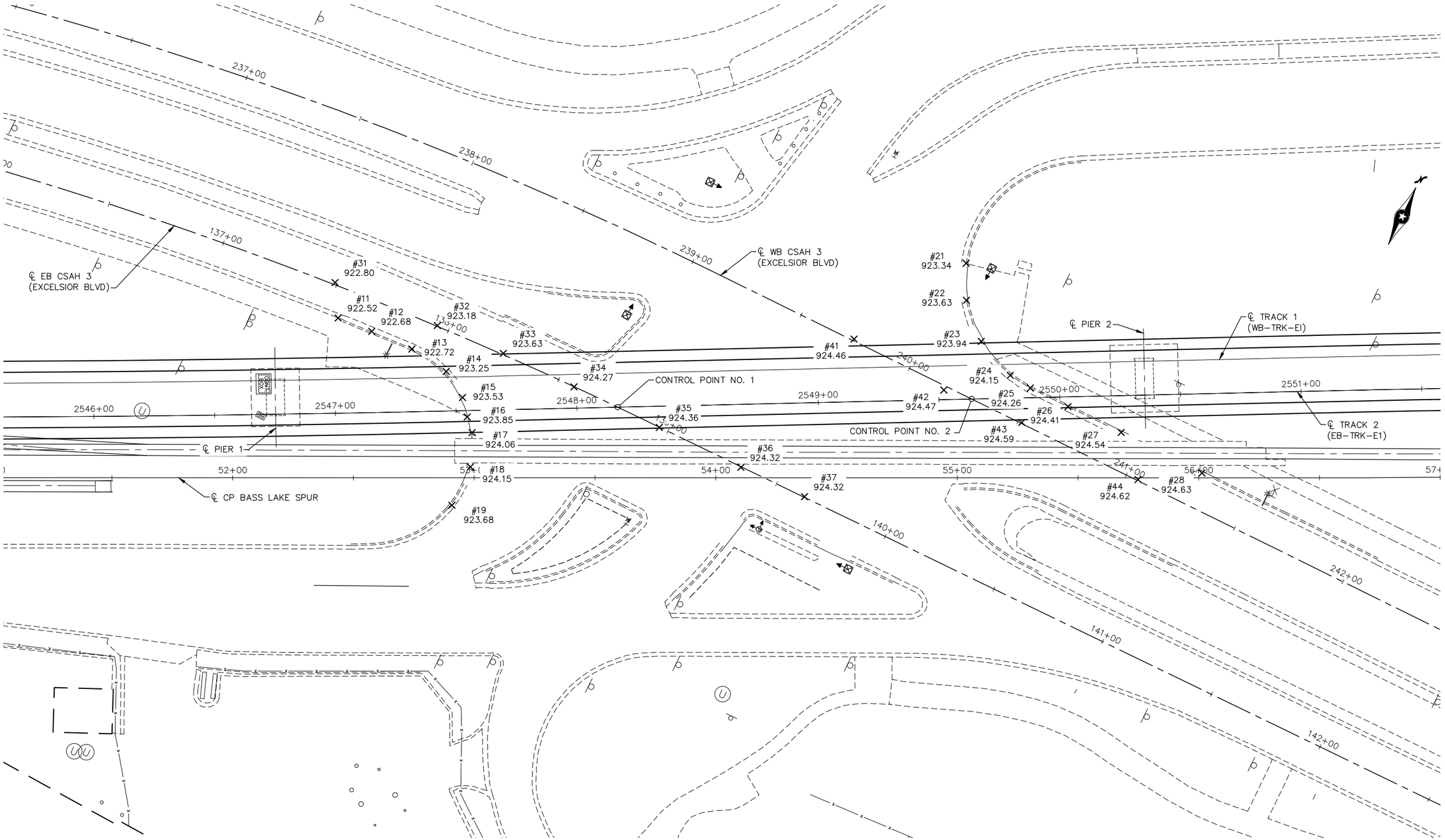

NO.	DATE	BY	CHECK	DESIGN	REVISION / SUBMITTAL

DESIGNED BY: ETN | CHECKED BY: JWJ
DRAWN BY: JAS | CHECKED BY: JWJ

AECOM

90% SUBMISSION - 01/22/16

METROPOLITAN COUNCIL

SOUTHWEST Green Line LRT Extension

CIVIL - VOLUME 4D
EXCELSIOR BLVD
BRIDGE 27C10
BRIDGE SURVEY PLAN 1

DISCIPLINE: STRUCTURE

SHEET NAME: CBR27C10-BRG-SUR-004

SHEET 165 OF 174

Jan, 15 2016 11:11 am V:\3400_ADC\CAD\SEGMENT E1\PLAN SHEETS\STRUCTURES\CBR27C10\CBR27C10-BRG-SUR-004.dwg By: hodgesj

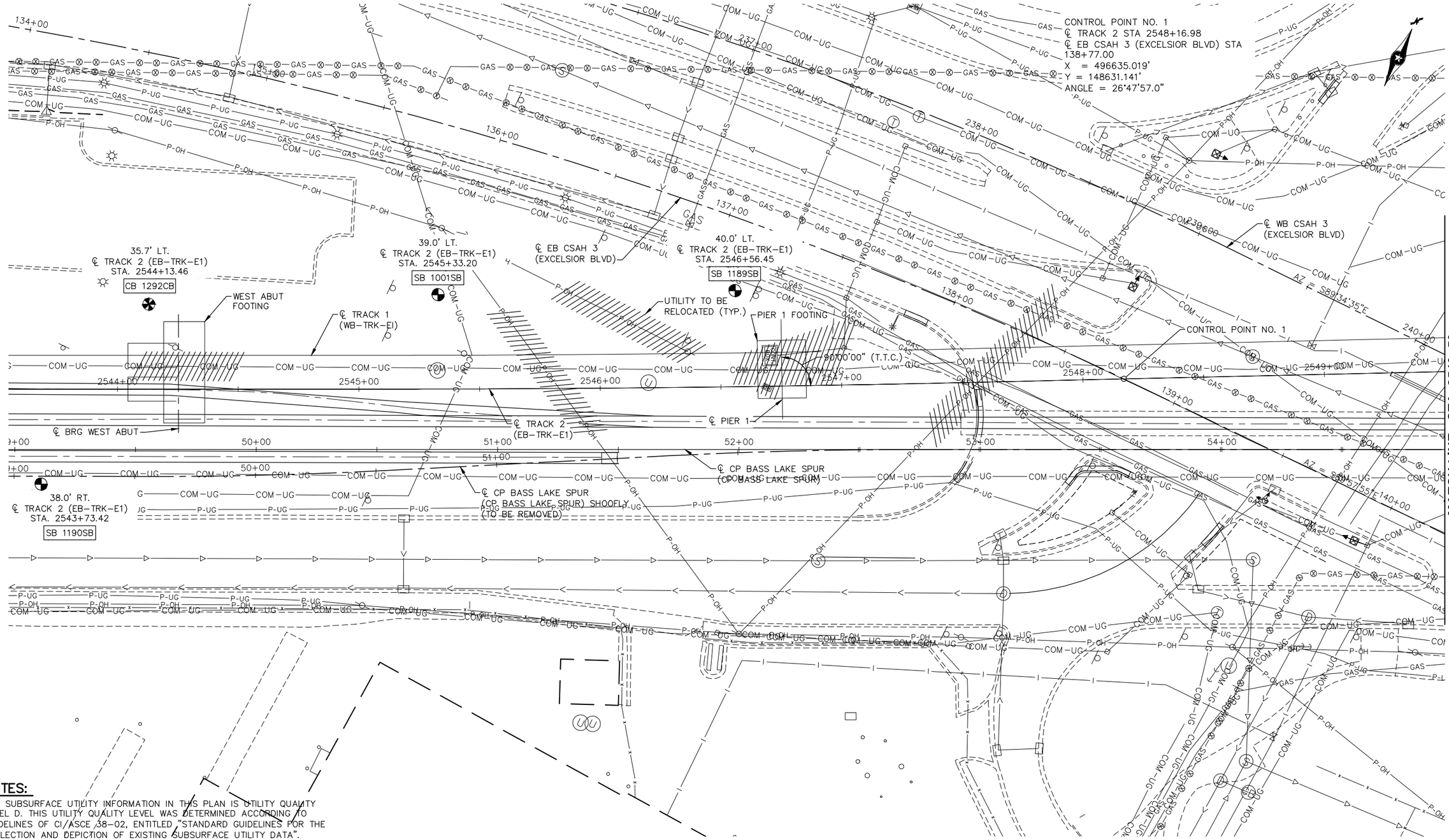

NOTES:

THE SUBSURFACE UTILITY INFORMATION IN THIS PLAN IS UTILITY QUALITY LEVEL D. THIS UTILITY QUALITY LEVEL WAS DETERMINED ACCORDING TO GUIDELINES OF CI/ASCE 38-02, ENTITLED "STANDARD GUIDELINES FOR THE COLLECTION AND DEPICTION OF EXISTING SUBSURFACE UTILITY DATA".

NO.	DATE	BY	CHECK	DESIGN	REVISION / SUBMITTAL

DESIGNED BY: ETN | CHECKED BY: JWJ
DRAWN BY: JAS | CHECKED BY: JWJ

AECOM

90% SUBMISSION - 01/22/16

METROPOLITAN COUNCIL

SOUTHWEST Green Line LRT Extension

CIVIL - VOLUME 4D
EXCELSIOR BLVD
BRIDGE 27C10
BRIDGE SURVEY PLAN 2

DISCIPLINE: STRUCTURE

SHEET NAME: CBR27C10-BRG-BOR-001

SHEET 166 OF 174

Jan, 15 2016 11:58 am V:\3400_ADC\CAD\SEGMENT E1\PLAN SHEETS\STRUCTURES\CBR27C10\CBR27C10-BRG-BOR.dwg By: hodgesj

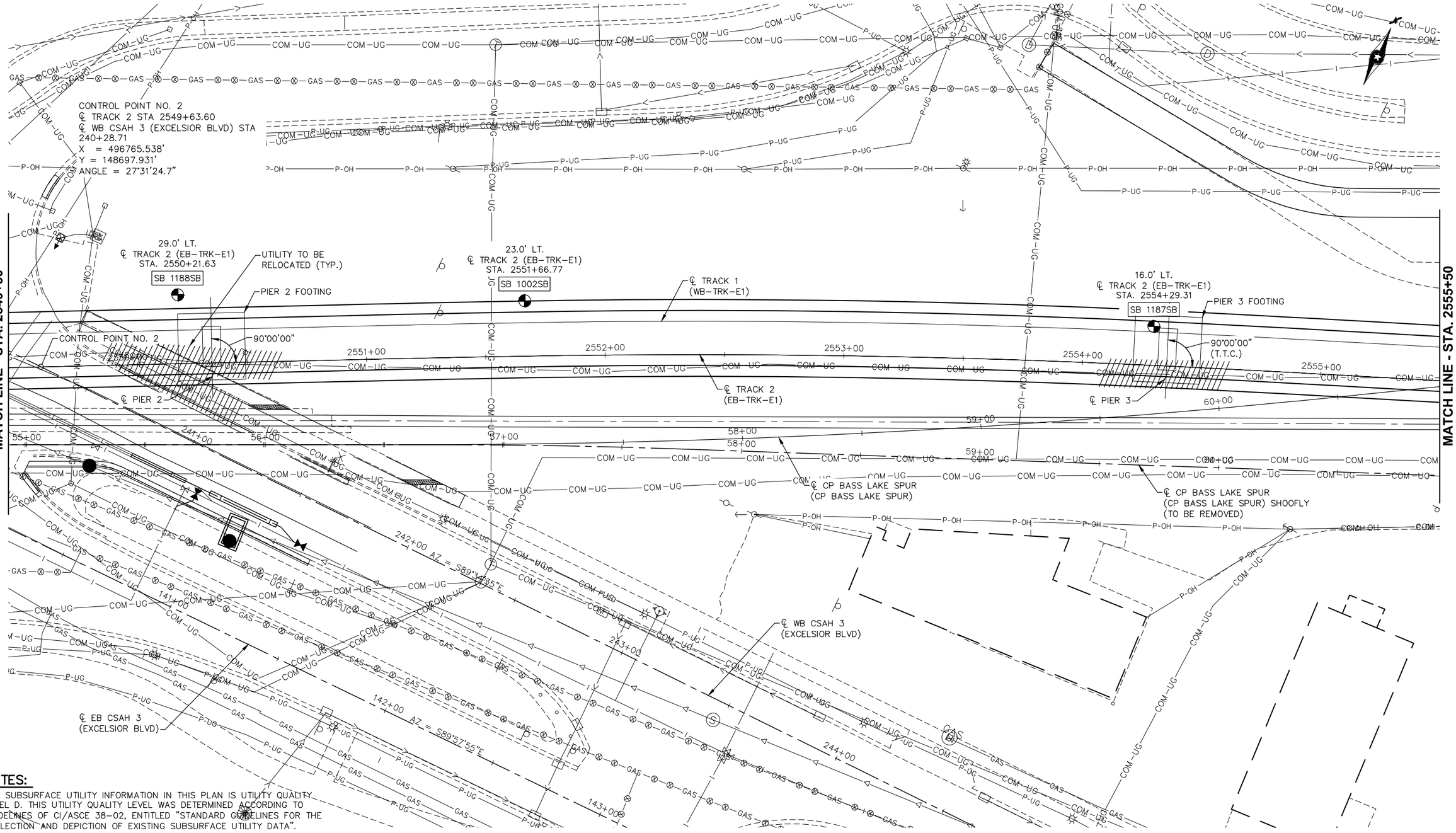

NOTES:

THE SUBSURFACE UTILITY INFORMATION IN THIS PLAN IS UTILITY QUALITY LEVEL D. THIS UTILITY QUALITY LEVEL WAS DETERMINED ACCORDING TO GUIDELINES OF CI/ASCE 38–02, ENTITLED "STANDARD GUIDELINES FOR THE COLLECTION AND DEPICTION OF EXISTING SUBSURFACE UTILITY DATA".

NO.	DATE	BY	CHECK	DESIGN	REVISION / SUBMITTAL

DESIGNED BY: ETN CHECKED BY: JWJ
DRAWN BY: JAS CHECKED BY: JWJ

AECOM

90% SUBMISSION - 01/22/16

METROPOLITAN COUNCIL

SOUTHWEST Green Line LRT Extension

CIVIL - VOLUME 4D
EXCELSIOR BLVD
BRIDGE 27C10
BRIDGE SURVEY PLAN 3

DISCIPLINE: STRUCTURE

SHEET NAME: CBR27C10-BRG-BOR-002

SHEET 167 OF 174

Jan, 15 2016 11:59 am V:\3400_ADC\CAD\SEGMENT E1\PLAN SHEETS\STRUCTURES\CBR27C10\CBR27C10-BRG-BOR.dwg By: hodgesj

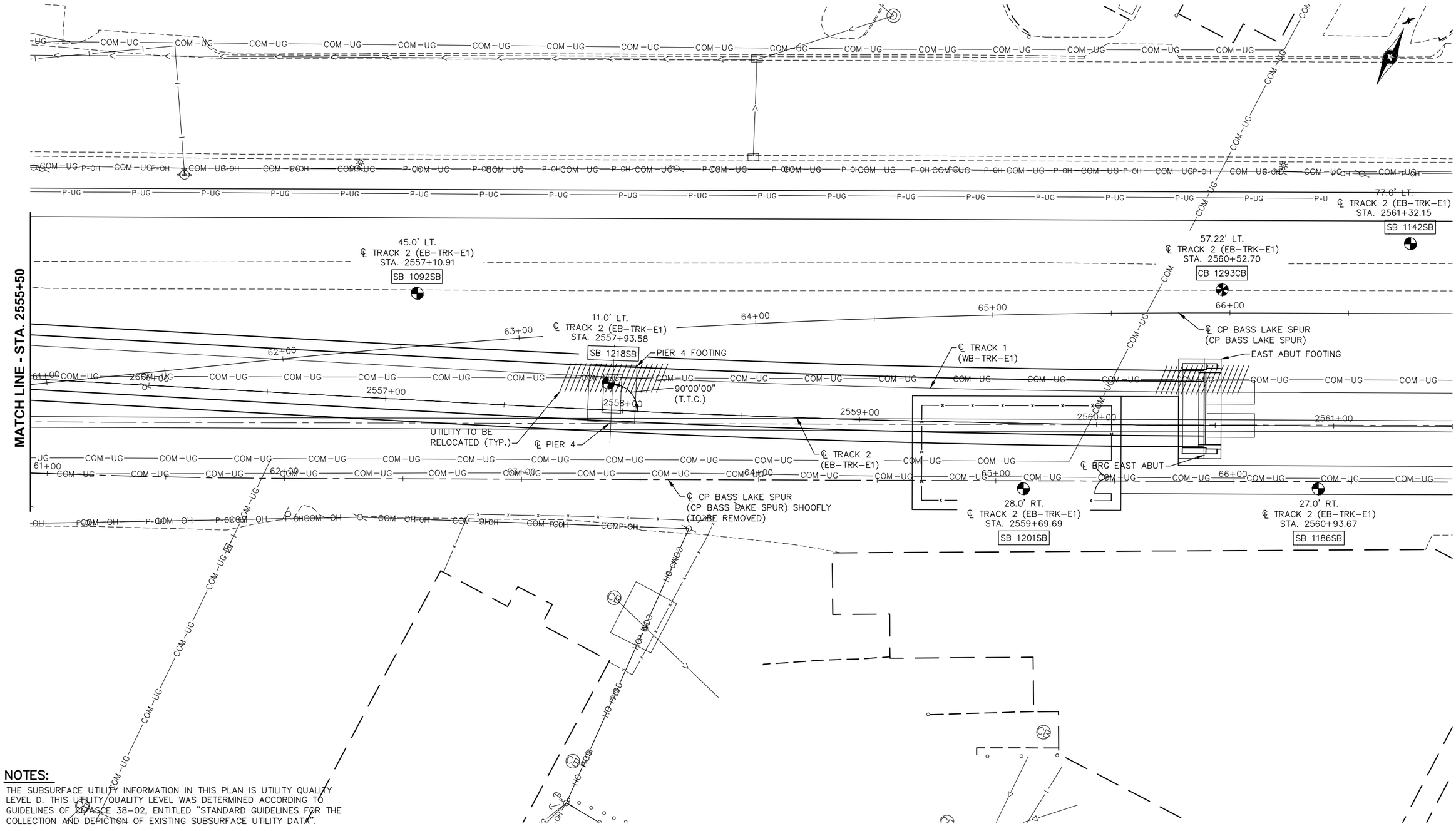

NOTES:

THE SUBSURFACE UTILITY INFORMATION IN THIS PLAN IS UTILITY QUALITY LEVEL D. THIS UTILITY QUALITY LEVEL WAS DETERMINED ACCORDING TO GUIDELINES OF CI/ASCE 38-02, ENTITLED "STANDARD GUIDELINES FOR THE COLLECTION AND DEPICTION OF EXISTING SUBSURFACE UTILITY DATA".

NO.	DATE	BY	CHECK	DESIGN	REVISION / SUBMITTAL

DESIGNED BY: ETN CHECKED BY: JWJ
DRAWN BY: JAS CHECKED BY: JWJ

AECOM

90% SUBMISSION - 01/22/16

METROPOLITAN COUNCIL

SOUTHWEST Green Line LRT Extension

CIVIL - VOLUME 4D
EXCELSIOR BLVD
BRIDGE 27C10
BRIDGE SURVEY PLAN 4

DISCIPLINE: STRUCTURE

SHEET NAME: CBR27C10-BRG-BOR-003

SHEET 168 OF 174

Jan, 15 2016 12:01 pm V:\3400_ADC\CAD\SEGMENT E1\PLAN SHEETS\STRUCTURES\CBR27C10\CBR27C10-BRG-BOR.dwg By: hodgej

EXISTING GROUNDLINE PROFILE
-20' LT.
TRACK 2 C/L
10' RT.

V.P.I. STA 2543+75.00
EL. 934.50

1292 CB
Elevation 921.8

1190 SB
Elevation 922.7

℄ BRG. WEST ABUT.

PROFILE GRADE (FG-EB-TRK-E1)

+5.00%

1001 SB
Elevation 921.5

Pore Water Pressure (psi)
60 48 36 24 12 0

Tip Stress (psi)
1600 3200 4800 6400 8000

FR (%)
0 10

21		Silty sand with gravel, trace roots, brown (A-2-4) fill
6		Gravelly silty sand with organic fines, black (A-2-4) fill
4		Sand with gravel, a little clayey sand with organic fines, brown, a little black (A-1-b) fill
13		SAND WITH GRAVEL, medium grained, light brown, moist, medium dense (SP) (A-1-b) alluvium
19		
26		GRAVELLY SAND, medium to fine grained, light brown, moist, medium dense (SP) (A-1-b) alluvium
23	▼	
13		SAND WITH GRAVEL, medium grained, light brown, waterbearing, medium dense (SP) (A-1-b) alluvium
25		GRAVEL WITH SILT AND SAND, brown, waterbearing, medium dense (GP) (A-1-b) alluvium
14		
18		
15		CLAYEY SAND, a little gravel, brown to grayish brown, very stiff to stiff (SC/SM) (A-2-4) till
21		
23		
15		
19		CLAYEY SAND, a little gravel, grayish brown, very stiff, a lens of waterbearing sand (SC/SM) (A-2-4) till
23		CLAYEY SAND WITH GRAVEL, grayish brown, very stiff (SC) (A-6) till
22		
18		
17		CLAYEY SAND, a little gravel, brownish gray to brown, very stiff, a lens of waterbearing sand at 45½' (SC/SM) (A-2-4) till
26		
32		
37		CLAYEY SAND WITH GRAVEL, brown, a little light grayish brown, hard, a lens of sand at 60' (SC/SM) (A-2-4) till
34		
16		
22		CLAYEY SAND WITH GRAVEL, brown, very stiff (SC/SM) (A-2-4) till
*		*8/.5 + 10/.5 + 50/.4 Top of Bedrock
50/.3		LIMESTONE, weathered, light brown
80		LIMESTONE, highly weathered, gray END OF BORING

26		Mixture of silty sand and sand with silt, with gravel and organic fines, a little clayey sand, trace roots, dark brown, frozen (A-2-4, A-1-b) fill
43		
5		ORGANIC CLAY, black, firm (OL/OH) (A-7-6) topsoil
15		SANDY LEAN CLAY, a little gravel, brown, lenses of silty sand (CL) (A-6) alluvium
8		SAND WITH SILT AND GRAVEL, fine to medium grained, brown (SP-SM) alluvium
10	▼	SAND, a little gravel, medium to fine grained, brown, moist, medium dense to loose, laminations of sandy lean clay (SP) (A-1-b) alluvium
16		
16		GRAVELLY SAND WITH SILT, medium to fine grained, waterbearing, loose (SP-SM) (A-1-b) alluvium
26		SAND WITH SILT, a little gravel, medium to fine grained, brown, waterbearing, medium dense (SP-SM) (A-1-b) alluvium
13		
10		CLAYEY SAND, a little gravel, grayish brown, very stiff (SC/SM) (A-2-4) till
7		
6		
5		
6		
6		
6		SILTY SAND, a little gravel, brown to grayish brown, medium dense to loose, lenses of clayey sand (SM/SC) (A-2-4) till
11		
22		
9		
20		
24		
32		SILTY SAND WITH GRAVEL, grayish brown, dense, lenses of clayey sand (SM/SC) till
18		
33		CLAYEY SAND WITH GRAVEL, possible cobble at 86', brown, very stiff to hard (SC) (A-6) till
100/.1		Top of Bedrock LIMESTONE, weathered, gray END OF BORING

Bottom of Hole 85.41

NOTES:

THE MATERIAL DESCRIPTIONS ARE CLASSIFIED ACCORDING TO THE UNIFIED SOIL CLASSIFICATION SYSTEM. DETAILS ON THE SYSTEM CAN BE FOUND IN THE FADR AND IN ASTM: D2488.

960 950 940 930 920 910 900 890 880 870 860 850 840 830 820 810 800 790

2544+00 2545+00 2546+00

NO.	DATE	BY	CHECK	DESIGN	REVISION / SUBMITTAL

DESIGNED BY: ETN CHECKED BY: JWJ
DRAWN BY: JAS CHECKED BY: JWJ

AECOM

90% SUBMISSION - 01/22/16

METROPOLITAN COUNCIL

SOUTHWEST Green Line LRT Extension

CIVIL - VOLUME 4D
EXCELSIOR BLVD
BRIDGE 27C10
BRIDGE SURVEY PROFILE 1

DISCIPLINE: STRUCTURE

SHEET NAME: CBR27C10-BRG-BOR-004

SHEET 169 OF 174

Jan, 15 2016 12:01 pm V:\3400_ADC\CAD\SEGMENT E1\PLAN SHEETS\STRUCTURES\CBR27C10\CBR27C10-BRG-BOR.dwg By: hodgesj

EXISTING GROUNDLINE PROFILE
-20' LT.
TRACK 2 C/L
10' RT.

℄ PIER 1

V.P.C. STA 2547+33.30
EL. 952.42

PROFILE GRADE (FG-EB-TRK-E1)

℄ EB CSAH 3 (EXCELSIOR BLVD)

1189 SB
Elevation 922.3

25	18	Mixture of silty sand and sand, a little gravel, trace roots, pieces of brick, ash/cinders, dark brown, a little brown (A-2-4) fill
12	5	Mixture of clayey sand and silty sand, a little gravel, dark brown and brown (A-6) fill
6	8	LEAN CLAY WITH SAND, black and dark brown, a little brown, firm, laminations of sand (CL) (A-6) alluvium
7	3	LEAN CLAY, grayish brown, a little brown, firm, laminations of sandy silt (CL) (A-6) alluvium
16	12	SAND, a little gravel, medium to fine grained, brown, moist, loose (SP) (A-1-b) alluvium
13	17	SAND, fine to medium grained, light grayish brown, moist to waterbearing, loose to waterbearing (SP) (A-3) alluvium
14	7	SAND WITH SILT AND GRAVEL, medium grained, dark brown, waterbearing, very loose (SP-SM) (A-1-b) alluvium
5	7	GRAVEL WITH SILT AND SAND, brown, waterbearing, medium dense (GP-GM) (A-1-b) alluvium
5	4	CLAYEY SAND, a little gravel, brown, stiff to very stiff to firm, laminations of waterbearing sand (SC/SM) (A-2-4) till
7	8	
8	9	
20	35	SAND, a little gravel, medium grained, grayish brown, waterbearing, dense (SP) (A-1-b) alluvium
18	20	CLAYEY SAND, a little gravel, brown, very stiff, laminations of waterbearing sand (SC/SM) (A-2-4) till
11	33	CLAYEY SAND WITH GRAVEL, brown, hard (SC/SM) (A-2-4) till
		Top of Bedrock
47	31	LIMESTONE, highly weathered, gray
100/0	100/0	LIMESTONE, generally fresh, gray END OF BORING

970 960 950 940 930 920 910 900 890 880 870 860 850 840 830 820 810 800

2547+00 2548+00 2549+00

NOTES:

THE MATERIAL DESCRIPTIONS ARE CLASSIFIED ACCORDING TO THE UNIFIED SOIL CLASSIFICATION SYSTEM. DETAILS ON THE SYSTEM CAN BE FOUND IN THE FADR AND IN ASTM: D2488.

NO.	DATE	BY	CHECK	DESIGN	REVISION / SUBMITTAL

DESIGNED BY: ETN CHECKED BY: JWJ
DRAWN BY: JAS CHECKED BY: JWJ

AECOM

90% SUBMISSION - 01/22/16

METROPOLITAN COUNCIL
SOUTHWEST Green Line LRT Extension

CIVIL - VOLUME 4D
EXCELSIOR BLVD
BRIDGE 27C10
BRIDGE SURVEY PROFILE 2

DISCIPLINE: STRUCTURE
SHEET NAME: CBR27C10-BRG-BOR-005

SHEET 170 OF 174

Jan. 15 2016 12:01 pm V:\3400_ADC\CAD\SEGMENT E1\PLAN SHEETS\STRUCTURES\CBR27C10\CBR27C10-BRG-BOR.dwg By: hodges

EXISTING GROUNDLINE PROFILE
-20' LT.
TRACK 2 C/L
10' RT.

℄ PIER 2

PROFILE GRADE (FG-EB-TRK-E1)

℄ WB CSAH 3 (EXCELSIOR BLVD)

1188 SB
Elevation 923.4

40	Clayey sand, with organic fines, a little gravel, trace roots, dark brown (A-6) fill
19	Mixture of silty sand with gravel and sand with silt, a little clayey sand with organic fines, brown, a little black and dark brown (A-1-b) fill
10	SANDY LEAN CLAY, dark brown, a little black, stiff, laminations of silty sand (CL) (A-6) weathered till
11	LEAN CLAY, dark brown to brown, stiff to very stiff, laminations of silt (CL) alluvium
19	SAND WITH SILT AND GRAVEL, medium to fine grained, brown, moist, medium dense (SP-SM) (A-1-b) alluvium
12	SAND WITH SILT, fine grained, brown, moist, medium dense (SP-SM) (A-3) alluvium
▼ 8	
3	
5	
12	SAND WITH SILT AND GRAVEL, medium to fine grained, brown, moist, loose, laminations of silty sand (SP-SM) (A-1-b) alluvium
12	SAND WITH SILT, a little gravel, medium to fine grained, brown, waterbearing, very loose to loose (SP-SM) alluvium
16	CLAYEY SAND, a little gravel, brown, stiff (SC/SM) (A-2-4) till
12	CLAYEY SAND WITH GRAVEL, brown, very stiff (SC/SM) (A-2-4) till
16	SAND WITH GRAVEL, medium grained, brown to light brownish gray, waterbearing, very loose (SP) (A-1-b) alluvium
1	SAND, a little gravel, medium grained, light grayish brown, a little gray, waterbearing, medium dense, lenses of lean clay (SP) (A-1-b) alluvium
18	SAND WITH GRAVEL, medium to coarse grained, light grayish brown, waterbearing, medium dense (SP) (A-1-b) alluvium
17	SAND, a little gravel, medium grained, light grayish brown, a little brown, waterbearing, medium dense, a lens of clayey sand (SP) (A-1-b) alluvium
15	
13	CLAYEY SAND, a little gravel, brown, stiff (SC/SM) (A-2-4) till
16	SAND WITH SILT, medium to fine grained, grayish brown, waterbearing, medium dense (SP-SM) (A-1-b) alluvium
15	SAND, a little gravel, medium grained, brown, waterbearing, medium dense (SP) (A-1-b) alluvium
12	SAND WITH SILT, fine to medium grained, brown, waterbearing, medium dense (SP-SM) (A-3) alluvium
19	
20	No recovery. Driller described as gravelly.
21	
22	
47	
25	
76	SILTY SAND, brown, very dense, laminations of sand (SM) (A-2-4) till
*	*52/.5 + 100/.1
	Top of Bedrock
138/.1	LIMESTONE, weathered, gray
100/0	LIMESTONE, generally fresh
100/0	END OF BORING

1002 SB
Elevation 923.8

45	Mixture of sandy lean clay and silty sand, with gravel, trace roots, brown and dark brown, frozen (A-6, A-4) fill
33	Sand with silt and gravel, brown (A-2-4/A-1-b) fill
36	SAND WITH GRAVEL, fine to medium grained, light brown, moist, dense (SP) (A-1-b) alluvium or fill
22	GRAVELLY SAND WITH SILT, apparent cobble at 8', fine to medium grained, brown, moist, dense to medium dense (SP-SM) (A-1-b) alluvium or fill
23	
22	
16	
▼ 12	
20	GRAVELLY SAND, medium to fine grained, light brown, moist, medium dense (SP) (A-1-b) alluvium
8	CLAYEY SAND, a little gravel, brown, very stiff (SC) (A-2-4) till
9	SILTY SAND, a little gravel, brown, medium dense (SM/SC) (A-2-4) till
9	
3	
20	SILTY SAND, a little gravel, brown, medium dense to loose, lenses of clayey sand (SM/SC) (A-2-4) till
22	
28	SAND, a little gravel, medium to fine grained, brown, waterbearing, very loose to medium dense (SP) (A-1-b) alluvium
30	
35	SAND WITH SILT, fine grained, brown, waterbearing, medium dense (SP-SM) (A-3) alluvium
40	
40	SAND, fine to medium grained, brown, waterbearing, medium dense to dense (SP) (A-3) alluvium
54	
43	SAND WITH SILT, fine grained, brown, waterbearing, dense (SP-SM) (A-3) alluvium
50	SAND, fine to medium grained, brown, waterbearing, very dense to dense (SP) (A-3) alluvium
30	SAND, medium to fine grained, brown, waterbearing, dense (SP) (A-1-b) alluvium
40	SAND, medium grained, brown, waterbearing, medium dense (SP) (A-1-b) alluvium
7	LEAN CLAY, brownish gray mottled, hard, laminations of fat clay (CL/CH) (A-7-6) alluvium
100	SILTY SAND, grayish brown, loose (SM/SC) (A-2-4) alluvium
90	GRAVELLY SILTY SAND, brown, very dense, lenses of lean clay and sand with silt (SM) (A-2-4) alluvium
35	SILTY SAND, a little gravel, brown, dense, a lens of clayey sand (SM/SC) (A-2-4) alluvium
	Top of Bedrock
100/.1	LIMESTONE, weathered, gray
	END OF BORING

NOTES:

THE MATERIAL DESCRIPTIONS ARE CLASSIFIED ACCORDING TO THE UNIFIED SOIL CLASSIFICATION SYSTEM. DETAILS ON THE SYSTEM CAN BE FOUND IN THE FADR AND IN ASTM:D2488.

970 960 950 940 930 920 910 900 890 880 870 860 850 840 830 820 810 800

2550+00 2551+00 2552+00

Jan. 15 2016 12:02 pm V:\3400_ADC\CAD\SEGMENT E1\PLAN SHEETS\STRUCTURES\CBR27C10\CBR27C10-BRG-BOR.dwg By: hodgesj

NO.	DATE	BY	CHECK	DESIGN	REVISION / SUBMITTAL

DESIGNED BY: ETN CHECKED BY: JWJ
DRAWN BY: JAS CHECKED BY: JWJ

AECOM

90% SUBMISSION - 01/22/16

METROPOLITAN COUNCIL

SOUTHWEST Green Line LRT Extension

CIVIL - VOLUME 4D
EXCELSIOR BLVD
BRIDGE 27C10
BRIDGE SURVEY PROFILE 3

DISCIPLINE: STRUCTURE
SHEET NAME: CBR27C10-BRG-BOR-006

SHEET 171 OF 174

EXISTING GROUNDLINE PROFILE
-20' LT.
TRACK 2 C/L
10' RT.

PROFILE GRADE (FG-EB-TRK-E1)

℄ PIER 3

PVI STA: 2553+43.30
PVI ELEV: 982.92
1220.00' VC
G1: +5.00%
G2: -5.00%
M: -15.250

1187 SB
Elevation 923.2

23 21	Silty sand with gravel, pieces of glass, trace roots, dark brown to brown (A-1-b) fill
7 11 12	LEAN CLAY, dark brown, a little brown, firm to stiff (CL) (A-6) alluvium or fill
22	SAND WITH SILT, a little gravel, fine to medium grained, brown, medium dense (SP-SM) (A-1-b) alluvium
▼20 27	SAND WITH GRAVEL, medium to fine grained, light brown, moist, medium dense (SP) (A-1-b) alluvium
16	GRAVELLY SILTY SAND, medium to fine grained, brown, wet, medium dense (SM) (A-1-b) alluvium
25	SAND WITH SILT AND GRAVEL, medium grained, brown, waterbearing, medium dense (SP-SM) (A-1-b) alluvium
29	SAND, a little gravel, medium grained, brown, waterbearing,
34	medium dense (SP) (A-1-b) alluvium
36	SAND, a little gravel, medium to fine grained, brown,
53	waterbearing, medium dense (SP) (A-1-b) alluvium
7	SAND WITH GRAVEL, medium to fine grained, brown,
	waterbearing, dense (SP) (A-1-b) alluvium
7	SAND, fine to medium grained, brown, waterbearing, medium
	dense (SP) (A-3) alluvium
7	SAND WITH GRAVEL, medium to fine grained, brown,
	waterbearing, very dense (SP) (A-1-b) alluvium
5	No samples recovered (gravelly)
3 3 12	GRAVELLY CLAYEY SAND, brown, firm (SC/SM) (A-2-4/A-1-b) till
27	No samples recovered (gravelly)
8 10 21	CLAYEY SAND, a little gravel, brownish gray, firm to very stiff, laminations of sand at 80' (SC/SM) (A-2-4) till
11 20 22	
100/.1	GRAVEL, grayish brown, waterbearing, very dense (GP) (A-1-a) alluvium or colluvium
100/.1	Top of Bedrock
100/.1	LIMESTONE, weathered, gray and grayish brown END OF BORING

970 960 950 940 930 920 910 900 890 880 870 860 850 840 830 820 810 800

2553+00 2554+00 2555+00

NOTES:

THE MATERIAL DESCRIPTIONS ARE CLASSIFIED ACCORDING TO THE UNIFIED SOIL CLASSIFICATION SYSTEM. DETAILS ON THE SYSTEM CAN BE FOUND IN THE FADR AND IN ASTM:D2488.

NO.	DATE	BY	CHECK	DESIGN	REVISION / SUBMITTAL

DESIGNED BY: ETN CHECKED BY: JWJ
DRAWN BY: JAS CHECKED BY: JWJ

AECOM

90% SUBMISSION - 01/22/16

METROPOLITAN COUNCIL

SOUTHWEST Green Line LRT Extension

CIVIL - VOLUME 4D
EXCELSIOR BLVD
BRIDGE 27C10
BRIDGE SURVEY PROFILE 4

DISCIPLINE: STRUCTURE
SHEET NAME: CBR27C10-BRG-BOR-007

SHEET 172 OF 174

Jan. 15 2016 12:02 pm V:\3400_ADC\CAD\SEGMENT E1\PLAN SHEETS\STRUCTURES\CBR27C10\CBR27C10-BRG-BOR.dwg By: hodgesj

EXISTING GROUNDLINE PROFILE
-20' LT.
TRACK 2 C/L
10' RT.

PROFILE GRADE (FG-EB-TRK-E1)

℄ PIER 4

℄ CP BASS LAKE SPUR (CP BASS LAKE SPUR)

1092 SB
Elevation 925.1

FILL, mixture of sand with silt and silty sand, with gravel, a little organic fines, trace roots, brown, a little dark brown (A-2-4)	15	
FILL, mostly sand with silt and gravel, possible cobble at 5', a little silty sand, trace roots, light grayish brown, a little dark brown (A-1-b)	17	
GRAVELLY SAND WITH SILT, medium to fine grained, grayish brown, moist, very dense to medium dense (SP-SM) (A-1-b)	70	
SAND, a little gravel, medium to fine grained, brown, moist, medium dense (SP) (A-1-b)	28	
GRAVELLY SAND WITH SILT, medium grained, brown, moist, very dense (SP-SM) (A-1-b)	20	
SAND WITH GRAVEL, medium grained, brown, moist, medium dense, a lens of fine to medium grained sand at 18' (SP) (A-1-b)	53	
SAND WITH GRAVEL, medium to coarse grained, brown,waterbearing, medium dense (SP) (A-1-b)	29	
END OF BORING	29	
	27	

1218 SB
Elevation 924.2

Silty sand with organic fines, a little gravel, trace roots, dark brown (A-1-b) fill	15	
Clayey sand with organic fines, a little gravel, dark brown (A-2-6) fill	11	
SAND WITH GRAVEL, medium to fine grained, light brown, moist, medium dense to dense (SP) (A-1-b) alluvium	30	
	24	
	29	
	25	
SAND, a little gravel, medium grained, brown, waterbearing, medium dense (SP) (A-1-b) alluvium	46	
	14	
SAND WITH SILT AND GRAVEL, medium to fine grained, brown, waterbearing, medium dense (SP-SM) (A-1-b) alluvium	14	
GRAVEL WITH SAND, brown, waterbearing, medium dense (GP) (A-1-b) alluvium	17	
SILTY SAND, a little gravel, brown, medium dense to loose (SM/SC) (A-2-4) till	24	
CLAYEY SAND, a little gravel, brown, firm (SC) (A-2-6) till	21	
SILTY SAND, a little gravel, brown, loose (SM) (A-2-4) till	8	
CLAYEY SAND, a little gravel, brown to brownish gray, firm to stiff (SC) (A-2-6) till	7	
SANDY LEAN CLAY, a little gravel, brownish gray, very stiff, laminations of silty sand (CL) (A-6) till	8	
CLAYEY SAND, a little gravel, grayish brown, very stiff (SC) (A-6) till	9	
CLAYEY SAND, a little gravel, gray, very stiff, laminations of silty sand (SC) (A-2-6) till	7	
SAND WITH SILT AND GRAVEL, medium to fine grained, light brown, waterbearing, medium dense (SP-SM) (A-1-b) alluvium	13	
CLAYEY SAND WITH GRAVEL, gray, hard (SC) (A-6) till	22	
	22	
	21	
	24	
	71	
	35	
CLAYEY SAND, a little gravel, gray, hard (SC) (A-2-6) till	50/5	
	50/3	
CLAYEY SAND WITH GRAVEL, grayish brown, hard (SC/SM) (A-2-4) till	91/9	
Top of Bedrock	84	
LIMESTONE, generally fresh, grey	100/0	
END OF BORING		

970 960 950 940 930 920 910 900 890 880 870 860 850 840 830 820 810 800

2556+00 2557+00 2558+00

NOTES:

THE MATERIAL DESCRIPTIONS ARE CLASSIFIED ACCORDING TO THE UNIFIED SOIL CLASSIFICATION SYSTEM. DETAILS ON THE SYSTEM CAN BE FOUND IN THE FADR AND IN ASTM:D2488.

NO.	DATE	BY	CHECK	DESIGN	REVISION / SUBMITTAL

DESIGNED BY: ETN CHECKED BY: JWJ
DRAWN BY: JAS CHECKED BY: JWJ

AECOM

90% SUBMISSION - 01/22/16

METROPOLITAN COUNCIL

SOUTHWEST Green Line LRT Extension

CIVIL - VOLUME 4D
EXCELSIOR BLVD
BRIDGE 27C10
BRIDGE SURVEY PROFILE 5

DISCIPLINE: STRUCTURE
SHEET NAME: CBR27C10-BRG-BOR-008

SHEET 173 OF 174

Jan, 15 2016 12:03 pm V:\3400_ADC\CAD\SEGMENT E1\PLAN SHEETS\STRUCTURES\CBR27C10\CBR27C10-BRG-BOR.dwg By: hodgesj

EXISTING GROUNDLINE PROFILE
-20' LT.
TRACK 2 C/L
10' RT.

V.P.T. STA. 2559+53.30
EL. 952.42

℄ BRG. EAST ABUT.

-5.00%

PROFILE GRADE (FG-EB-TRK-E1)

1201 SB
Elevation 924.5

1293 CB
Elevation 925.3

1186 SB
Elevation 924.7

Pore Water Pressure (psi)
60 48 36 24 12 0

Tip Stress (tsi)
1600 3200 4800 6400 8000 0

FR (%)
10

970 960 950 940 930 920 910 900 890 880 870 860 850 840 830 820 810 800

2559+00 2560+00 2561+00

13		Wood chips, dark brown, fill
13		Silty sand with gravel, dark brown (A-1-b) fill
10		Sand with silt, a little gravel, brown (A-1-b) fill
3		Silty sand, a little gravel, zones with organic fines, pieces of wood, trace roots, brown and dark brown (A-2-4) fill
7		Silty sand with gravel, brown (A-1-b) fill
28		SAND WITH SILT AND GRAVEL, medium to fine grained, brown, moist, medium dense (SP-SM) (A-1-b) alluvium
29		
22		
19		GRAVELLY SAND, medium to coarse grained, brown, waterbearing, medium dense (SP) (A-1-a) alluvium
16		
17		SAND WITH GRAVEL, medium grained, grayish brown, waterbearing, medium dense (SP) (A-1-b) alluvium
24		
27		GRAVELLY SAND WITH SILT, medium to coarse grained, brown, waterbearing (SP-SM) alluvium
15		
11		
9		CLAYEY SAND, a little gravel, brown, stiff (SC) (A-2-6) till
13		
8		
11		SILTY SAND, a little gravel, brown to grayish brown, very stiff (SM/SC) (A-2-4) till
18		
21		
14		
32		
36		CLAYEY SAND, a little gravel, grayish brown, medium dense to dense (SC) (A-2-6) till
23		
19		
58		GRAVELLY SILTY SAND, brownish gray, very dense (SM) (A-1-b) colluvium
145		
100/.05		Top of Bedrock
100/0		LIMESTONE, weathered, light brown
		END OF BORING

Bottom of Hole 61.83

20		Silty sand with gravel, brown (A-1-b) fill
10		
4		LEAN CLAY WITH SAND, trace roots, brown, a little dark brown, soft (CL) (A-6) alluvium or fill
19		SAND WITH SILT AND GRAVEL, medium to fine grained, brown, moist, medium dense (SP-SM) (A-1-b) alluvium
26		
27		
24		SAND WITH SILT, a little gravel, fine to medium grained, brown, waterbearing, medium dense, lens of clayey sand at 18' (SP-SM) (A-3) alluvium
23		
30		GRAVELLY SAND, medium to coarse grained, brown, waterbearing, medium dense (SP) (A-1-b) alluvium
27		SAND WITH SILT AND GRAVEL, medium to fine grained, brown, waterbearing, medium dense to loose (SP-SM) (A-1-b) alluvium
26		
10		
6		
10		CLAYEY SAND, a little gravel, brown to gray, firm to hard (SC/SM) (A-2-4) till
8		
16		
34		CLAYEY SAND, a little gravel, brown, hard (SC) (A-6) till
33		SILTY SAND, a little gravel, brown, dense (SM/SC) (A-2-4) till
16		CLAYEY SAND, a little gravel, brown, very stiff to stiff (SC/SM) (A-2-4) till
15		
41		
49		SILTY SAND WITH GRAVEL, gray, wet, dense (SM/SC) (A-2-4/A-1-b) till
37		SANDY LEAN CLAY, a little gravel, gray, hard, laminations of silty sand (CL) (A-6) till
21		SAND WITH SILT, a little gravel, fine to medium grained, brownish gray, waterbearing, medium dense (SP-SM) (A-2-4) alluvium
31		SANDY LEAN CLAY, a little gravel, gray, hard (CL) (A-6) till
32		SILTY SAND, a little gravel, brown, gray, dense (SM) (A-2-4) till
54		
46		SAND WITH SILT, a little gravel, fine grained, gray, waterbearing, dense (SP-SM) alluvium
100/.1		Top of Bedrock
100/.1		LIMESTONE, weathered, light brown to gray
		END OF BORING

NOTES:

THE MATERIAL DESCRIPTIONS ARE CLASSIFIED ACCORDING TO THE UNIFIED SOIL CLASSIFICATION SYSTEM. DETAILS ON THE SYSTEM CAN BE FOUND IN THE FADR AND IN ASTM:D2488.

Jan, 15 2016 12:03 pm V:\3400_ADC\CAD\SEGMENT E1\PLAN SHEETS\STRUCTURES\CBR27C10\CBR27C10-BRG-BOR.dwg By: hodgesj

NO.	DATE	BY	CHECK	DESIGN	REVISION / SUBMITTAL

DESIGNED BY: ETN CHECKED BY: JWJ
DRAWN BY: JAS CHECKED BY: JWJ

AECOM

90% SUBMISSION - 01/22/16

METROPOLITAN COUNCIL

SOUTHWEST Green Line LRT Extension

CIVIL - VOLUME 4D
EXCELSIOR BLVD
BRIDGE 27C10
BRIDGE SURVEY PROFILE 6

DISCIPLINE: STRUCTURE
SHEET NAME: CBR27C10-BRG-BOR-009

SHEET 174 OF 174

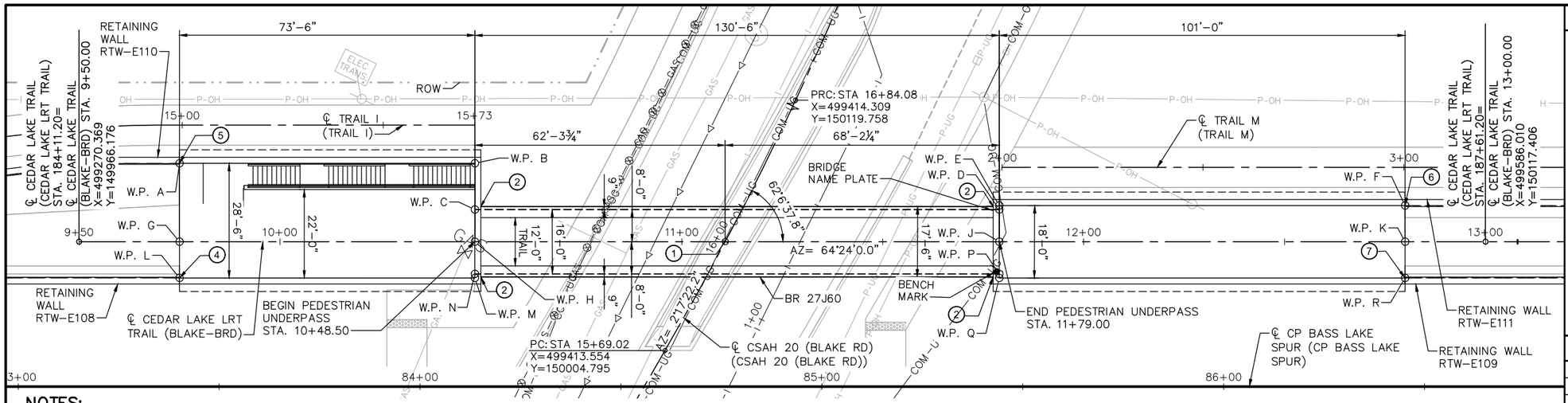

NOTES:

1. CONTROL POINT
   ℄ CEDAR LAKE LRT TRAIL (BLAKE–BRD) STA. 11+10.81
   ℄ CSAH 20 (BLAKE RD) (CSAH 20 (BLAKE RD)) STA. 15+99.94
   X = 499415.390
   Y = 150035.659
   ANGLE = 62°6'37.8"
2. EDGE OF UNDERPASS STRUCTURE AT FACE OF HEADWALL
3. SEE BORING SURVEY SHEET FOR IN PLACE UTILITIES
4. END RTW–E108 AND BEGIN SW APPROACH AT F.F. HEADWALL
   ℄ CEDAR LAKE LRT TRAIL (BLAKE–BRD) STA. 9+75.00
   X = 499296.805
   Y = 149968.862
5. END RTW–E110 AND BEGIN NW APPROACH AT F.F. HEADWALL
   ℄ CEDAR LAKE LRT TRAIL (BLAKE–BRD) STA. 9+75.00
   X = 499284.493
   Y = 149994.559
6. END RTW–E111 AND BEGIN NE APPROACH AT F.F. HEADWALL
   ℄ CEDAR LAKE LRT TRAIL (BLAKE–BRD) STA. 12+80.00
   X = 499564.086
   Y = 150116.881
7. END RTW–E109 AND BEGIN SE APPROACH AT F.F. HEADWALL
   ℄ CEDAR LAKE LRT TRAIL (BLAKE–BRD) STA. 12+80.00
   X = 499571.863
   Y = 150100.648
8. VERTICAL CURVE STATIONS AND ELEVATIONS ARE ALONG THE CEDAR LAKE LRT TRAIL ALIGNMENT

GENERAL PLAN

0 7.5 15 30
SCALE IN FEET

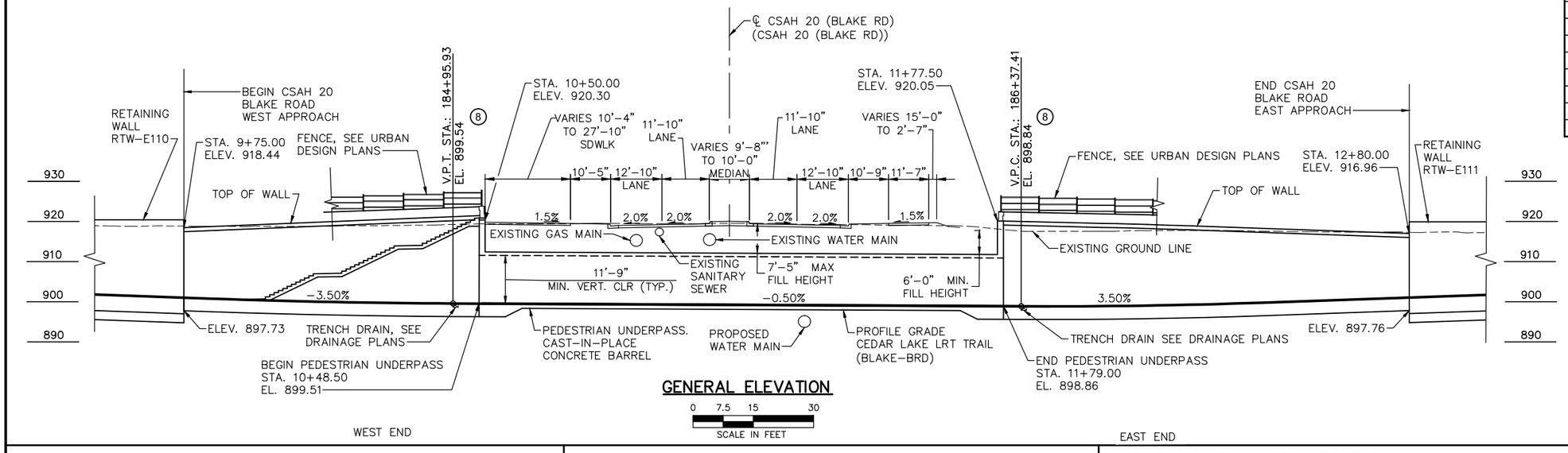

GENERAL ELEVATION

0 7.5 15 30
SCALE IN FEET

DESIGN DATA

AASHTO LRFD BRIDGE DESIGN SPECIFICATIONS, 7TH EDITION, 2014 WITH 2015 INTERIM REVISIONS

SOUTHWEST LIGHT RAIL TRANSIT DESIGN CRITERIA (REVISION 4.0)

LOAD AND RESISTANCE FACTOR DESIGN METHOD

HL–93 LIVE LOAD

MATERIAL DESIGN PROPERTIES:
REINFORCED CONCRETE:
f'c = 4500 PSI n = 8
fy = 60000 PSI REINFORCEMENT

DESIGN FILL HEIGHT = 6'–0" (MIN.) (7'–4" MAX)
UNIT WEIGHT OF FILL = 120 PCF

INSIDE HEIGHT = 11'–9" (10'–0" MIN. VERT. CLR.)
INSIDE WIDTH = 15'–10"

DESIGN SPEED: 35 MPH (CSAH 20)
30 MPH (CEDAR LAKE LRT TRAIL)

LIST OF SHEETS

NO.	DESCRIPTION
1	GENERAL PLAN AND ELEVATION
2	TRANSVERSE SECTIONS & QUANTITIES
3	UNDERPASS LAYOUT
4–5	UNDERPASS DETAILS AND REINF. 1 & 2
6–7	HEADWALL DETAILS 1 & 2
8–9	HEADWALL REINFORCEMENT 1 & 2
10–11	WEST APPROACH DETAILS 1 & 2
12	WEST APPROACH WALL DETAILS
13–14	WEST APPROACH REINFORCEMENT 1 & 2
15	WEST APPROACH WALL REINFORCEMENT
16–17	WEST APPROACH STAIR DETAILS 1 & 2
18–19	EAST APPROACH DETAILS 1 & 2
20	EAST APPROACH WALL DETAILS
21–22	EAST APPROACH REINFORCEMENT 1 & 2
23	EAST APPROACH WALL REINFORCEMENT
24–25	REINFORCING BAR LIST 1 & 2
26	BRIDGE DETAILS
27	CONCRETE PARAPET (TYPE P–1)
28	MODIFIED CONCRETE PARAPET (TYPE P–1)
29	AS–BUILT BRIDGE DATA
30–31	BRIDGE SURVEY 1 & 2
32–35	BORINGS 1–4
36–37	STAGING PLAN 1–2

BRIDGE NO. 27J60

CSAH20 OVER CEDAR LAKE LRT TRAIL 0.7 MI S OF JCT. OF T.H.7 & CSAH 20

130'–6" SINGLE BARREL CONCRETE CULVERT
12'–0" TRAIL

27° 53' 22.2" SKEW

CONCRETE BOX CULVERT ID. No 113

GENERAL PLAN

SEC 19 T 117N R 21W
CITY OF HOPKINS HENNEPIN COUNTY

APPROVED: _____
STATE BRIDGE ENGINEER DATE

JOB NO. T9N635 | STATE PROJECT NO. 9909–01 | MNDOT REVIEW: JOE NIETFELD

NO.	DATE	BY	CHECK	DESIGN	REVISION / SUBMITTAL

DESIGNED BY: AMC CHECKED BY: MTC
DRAWN BY: EBM CHECKED BY: LKZ

AECOM Kimley»Horn

90% SUBMISSION - 01/22/16

METROPOLITAN COUNCIL

SOUTHWEST Green Line LRT Extension

CIVIL - VOLUME 4D
BLAKE RD PEDESTRIAN UNDERPASS
BRIDGE 27J60
GENERAL PLAN AND ELEVATION

DISCIPLINE: STRUCTURES
SHEET NAME: CBR27J60-GPE-001

SHEET 1 OF 37

Jan, 13 2016 04:31 pm V:\3400_ADC\CAD\SEGMENT E1\PLAN SHEETS\STRUCTURES\27J60\CBR27J60-GPE-001.dwg By: Edgar.McKoy

CONSTRUCTION NOTES:

THE 2016 EDITION OF THE MINNESOTA DEPARTMENT OF TRANSPORTATION "STANDARD SPECIFICATIONS FOR CONSTRUCTION" SHALL GOVERN.

THE BAR SIZES SHOWN IN THE PLAN ARE IN U.S. CUSTOMARY DESIGNATIONS. THE FIRST DIGIT OR THE FIRST TWO DIGITS OF EACH BAR MARK INDICATE THE BAR SIZE.

BARS MARKED WITH THE SUFFIX "E" SHALL BE EPOXY COATED IN ACCORDANCE WITH SPEC. 3301.

THE SUBSURFACE UTILITY INFORMATION IN THIS PLAN IS UTILITY QUALITY LEVEL D. THIS UTILITY QUALITY LEVEL WAS DETERMINED ACCORDING TO THE GUIDELINES OF CI/ASCE 38-02, ENTITLED "STANDARD GUIDELINES FOR THE COLLECTION AND DEPICTION OF EXISTING SUBSURFACE UTILITY DATA."

CONCRETE MATERIALS, MIX DESIGN, TESTING AND CONSTRUCTION SHALL BE IN ACCORDANCE WITH CHAPTER 8, PART 1 OF THE 2014 A.R.E.M.A MANUAL; MnDOT 2461 AND THE SPECIAL PROVISIONS.

CONCRETE SHALL BE MADE WITH A LOW ALKALI PORTLAND CEMENT (TYPE I OR TYPE I/II) IN ACCORDANCE WITH ASTM C 150, LATEST EDITION, WITH LESS THAN 0.6% SODIUM EQUIVALENTS.

MAXIMUM CONCRETE WATER/CEMENT RATIO SHALL BE IN ACCORDANCE WITH CHAPTER 8, SECTION 1.11 OF THE 2014 A.R.E.M.A MANUAL AND MnDOT 2461.

CONCRETE SHALL BE MIX NO. 3G52 WITH NO CALCIUM CHLORIDE ALLOWED.

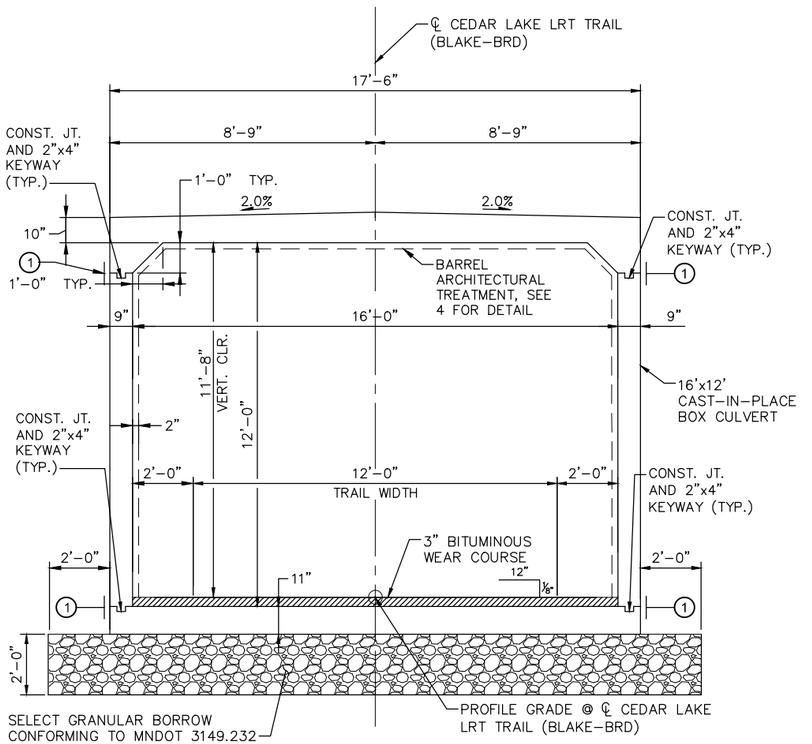

TRANSVERSE SECTION - UNDERPASS

(STA. 10+48.50 TO STA. 11+79.00)

0 1.25' 2.5' 5'

HORIZONTAL SCALE IN FEET

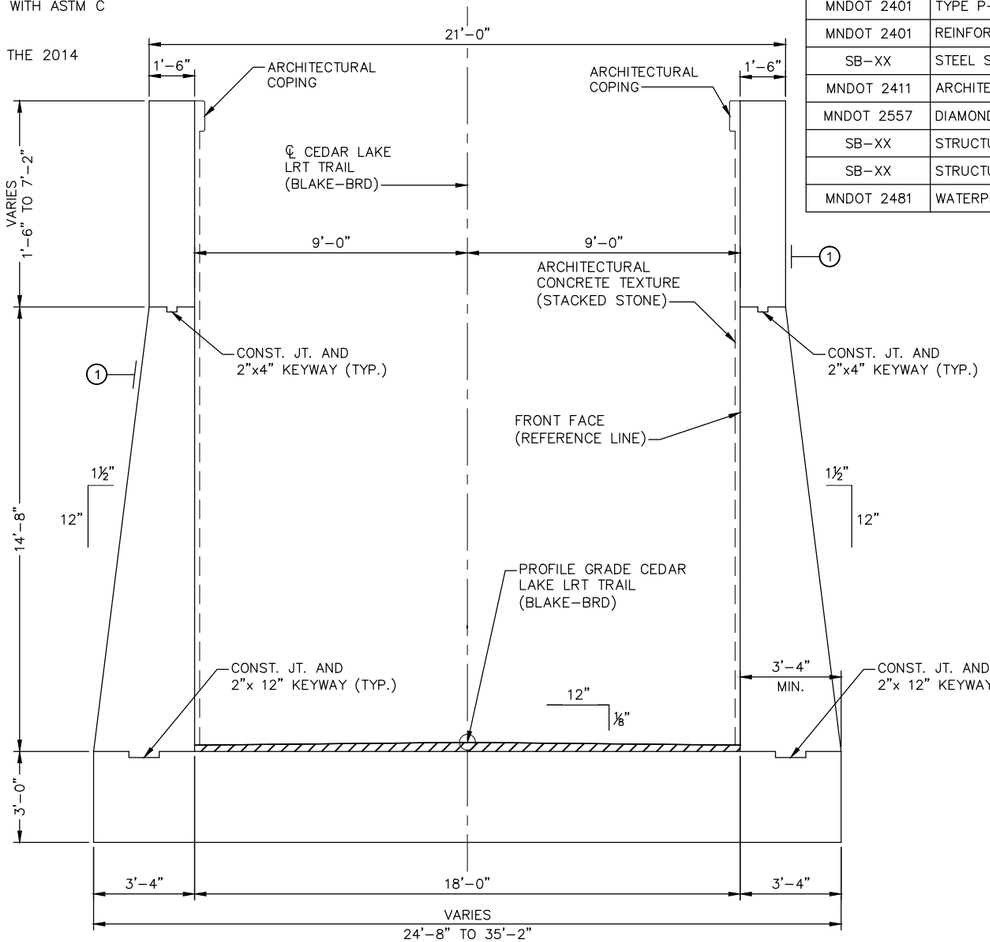

TRANSVERSE SECTION - APPROACH

(STA. 9+75.00 TO STA. 10+48.50 & STA. 11+79.00 TO STA. 12+80.00)

0 1.25' 2.5' 5'

HORIZONTAL SCALE IN FEET

SCHEDULE OF QUANTITIES			
SPEC. SECTION	COMPONENT ITEM SUMMARY	UNIT	QUANTITY
-	CONSTRUCT CSAH20 BLAKE ROAD UNDERPASS	LUMP SUM	LS

SUMMARY OF ESTIMATED QUANTITIES FOR ENTIRE UNDERPASS			
SPEC. SECTION	COMPONENT ITEM SUMMARY	UNIT (3)	QUANTITY (3)
MNDOT 2401	STRUCTURAL CONCRETE (1G52)	CU. YD.	
MNDOT 2401	STRUCTURAL CONCRETE (3B52)	CU. YD.	
MNDOT 2401	REINFORCEMENT BARS	POUND	
MNDOT 2401	TYPE P-1 BARRIER CONCRETE	LIN. FT.	
MNDOT 2401	REINFORCEMENT BARS (EPOXY COATED)	POUND	
SB-XX	STEEL SHEET PILING (TEMPORARY)	LUMP SUM	
MNDOT 2411	ARCHITECTURAL CONCRETE TEXTURE (BASKET WEAVE)	SQ. FT.	
MNDOT 2557	DIAMOND MESH SAFETY RAIL	LIN. FT.	
SB-XX	STRUCTURE EXCAVATION	LUMP SUM	
SB-XX	STRUCTURAL BACKFILL	CU. YD.	
MNDOT 2481	WATERPROOFING	SQ. FT.	

NOTES:

(1) MEMBRANE WATERPROOFING SYSTEM PER SPEC. 2481.3B.

(2) A BENCHMARK IS REQUIRED. LOCATED AT THE SOUTH EAST CORNER OF THE BRIDGE. STATE WILL FURNISH DISK BEND PRONGS OUTWARD TO ANCHOR DISK IN CONCRETE. BOTTOM OF DISK TOP TO BE PLACED FLUSH WITH CONCRETE.

(3) QUANTITIES LISTED FOR THE COMPONENT ITEMS OF THE LUMP SUM BRIDGE 27J60 ITEM ARE FOR INFORMATIONAL PURPOSES. ANY ADDITIONAL ITEMS OR CHANGED IN QUANTITIES REQUIRED SHALL BE PROVIDED BY THE CONTRACTOR WITH NO ADDITIONAL COMPENSATION.

(4) ELECTRICAL CONDUIT FOR LIGHTING. SEE ELECTRICAL PLANS FOR DETAILS.

(5) UNDERPASS LIGHTING FIXTURE. SEE ELECTRICAL PLANS FOR LAYOUT AND DETAILS.

(6) THE THICKNESS OF ARCHITECTURAL CONCRETE TEXTURE VARIES WITH THE TEXTURE RELIEF. THE STRUCTURAL CONCRETE 3G52 QUANTITIES DO NOT INCLUDE THE MATERIAL WITHIN THE ARCHITECTURAL CONCRETE TEXTURE. MATERIAL NEEDED FOR THE TEXTURING SHALL BE INCIDENTAL.

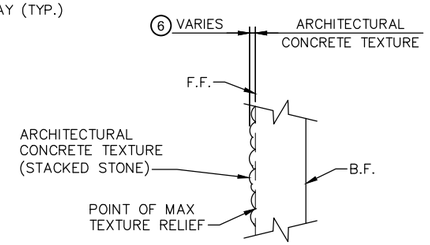

ARCHITECTURAL DETAIL

FROM MNDOT STANDARD SHEET 5-297.624
REBAR NOT SHOWN FOR CLARITY

NO.	DATE	BY	CHECK	DESIGN	REVISION / SUBMITTAL

DESIGNED BY: SMY | CHECKED BY: MTC
DRAWN BY: EBM | CHECKED BY: LKZ

AECOM Kimley»Horn

90% SUBMISSION - 01/22/16

METROPOLITAN COUNCIL

SOUTHWEST Green Line LRT Extension

CIVIL - VOLUME 4D
BLAKE RD PEDESTRIAN UNDERPASS
BRIDGE 27J60
TRANSVERSE SECTIONS AND QUANTITIES

DISCIPLINE: STRUCTURES
SHEET NAME: CBR27J60-TRN-001

SHEET 2 OF 37

Jan, 13 2016 04:32 pm V:\3400_ADC\CAD\SEGMENT E1\PLAN SHEETS\STRUCTURES\27J60\CBR27J60-TRN-001.dwg By: Edgar.McKoy

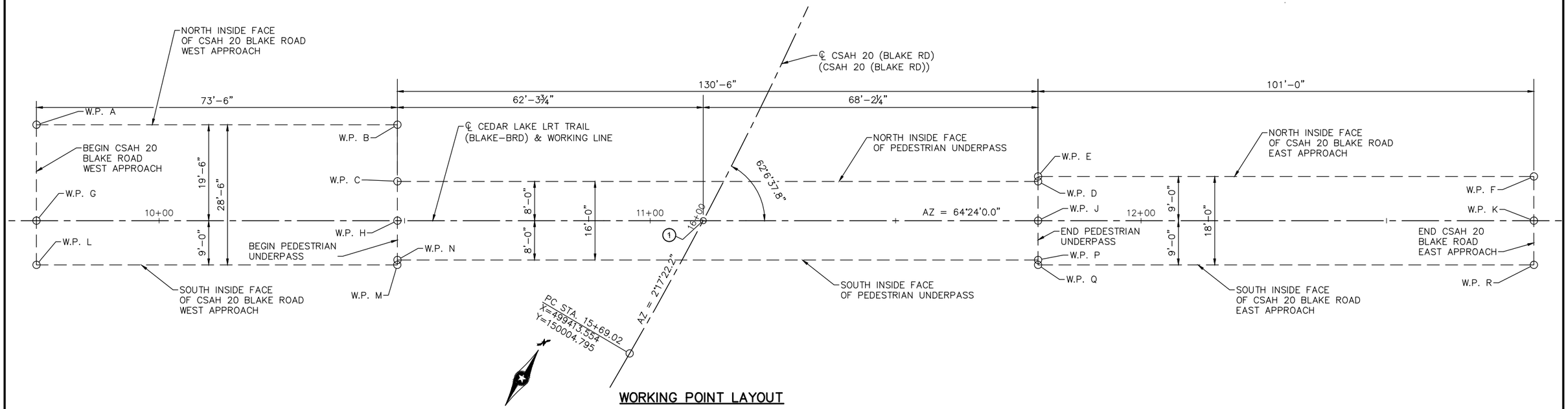

WORKING POINT LAYOUT

NOTES:

1. CONTROL POINT
   ℄ CEDAR LAKE LRT TRAIL (BLAKE-BRD) STA. 11+10.81
   ℄ CSAH 20 (BLAKE RD) (CSAH 20 (BLAKE RD)) STA. 15+99.94
   X = 499415.390
   Y = 150035.659
   ANGLE = 62°6'37.8"

DIMENSIONS BETWEEN WORKING POINTS																		COORDINATES		ELEVATION	
POINT	STATION	A	B	C	D	E	F	G	H	J	K	L	M	N	P	Q	R	X	Y	TOP OF BOTTOM SLAB	POINT
A	9+75.00		73.50					19.50	76.04				78.83					499284.487	149994.563	900.98	A
B	10+48.50								19.50			78.83						499350.776	150026.324	899.51	B
C	10+48.50				130.50				8.00	130.74					131.48			499355.745	150015.953	899.51	C
D	11+79.00									8.00				131.48				499473.433	150072.339	898.86	D
E	11+79.00						101.00			9.00	101.40						102.59	499473.001	150073.241	898.86	E
F	12+80.00										9.00					102.59		499564.086	150116.881	901.02	F
G	9+75.00								73.50			9.00	74.05					499292.913	149976.977	900.98	G
H	10+48.50									130.50			9.00	8.00	130.74	130.81		499359.201	150008.737	899.51	H
J	11+79.00										101.00				8.00	9.00	101.40	499476.889	150065.124	898.86	J
K	12+80.00																9.00	499567.975	150108.765	901.02	K
L	9+75.00												73.50	73.51				499296.803	149968.859	900.98	L
M	10+48.50													1.00	130.51	130.50		499363.090	150000.621	899.51	M
N	10+48.50														130.50			499362.656	150001.522	899.51	N
P	11+79.00																	499480.346	150057.909	898.86	P
Q	11+79.00																101.00	499480.778	150057.008	898.86	Q
R	12+80.00																	499571.863	150100.648	901.02	R

NO.	DATE	BY	CHECK	DESIGN	REVISION / SUBMITTAL

DESIGNED BY: AMC | CHECKED BY: MTC
DRAWN BY: EBM | CHECKED BY: LKZ

AECOM Kimley»Horn

90% SUBMISSION - 01/22/16

METROPOLITAN COUNCIL

SOUTHWEST Green Line LRT Extension

CIVIL - VOLUME 4D
BLAKE RD PEDESTRIAN UNDERPASS
BRIDGE 27J60
UNDERPASS LAYOUT

DISCIPLINE: STRUCTURES
SHEET NAME: CBR27J60-LYT-001

SHEET 3 OF 37

Jan. 13 2016 04:33 pm V:\3400_ADC\CAD\SEGMENT E1\PLAN SHEETS\STRUCTURES\27J60\CBR27J60-LYT-001.dwg By: Edgar.McKoy

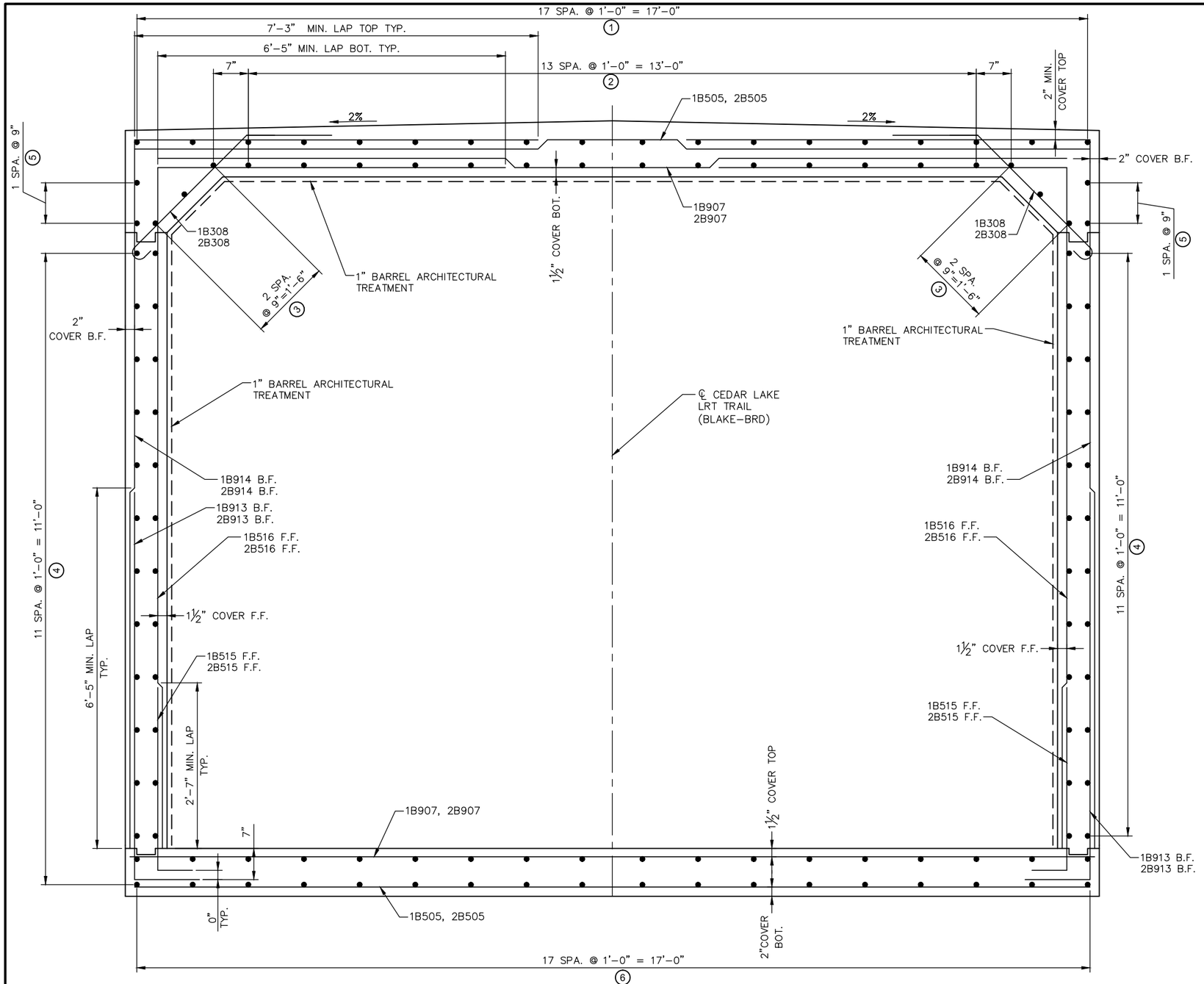

TRANSVERSE BARREL SECTION

CONSTRUCTION NOTES:

ANY REINFORCEMENT BARS SHALL CONFORM TO APPLICABLE REQUIREMENTS OF AASHTO M259.

1½" MIN. AND 2" MAX. CONCRETE COVER ON ALL REINFORCEMENT, INCLUDING SHEAR REINFORCEMENT.

WHEN REINFORCEMENT IS CUT, ADDITIONAL REINFORCEMENT SHALL BE ADDED ON BOTH SIDES OF THE CUT MEMBER TO REPLACE OR EXCEED THE CUT STEEL.

CONCRETE SHALL BE MIX NO. 3G52 WITH NO CALCIUM CHLORIDE ALLOWED.

BACKFILL SHALL NOT BE PLACED UNTIL TOP SOFFIT IS FORMED OR THE WALLS ARE SUPPORTED BY TEMPORARY HORIZONTAL STRUT.

COMPACT THE FIRST 1.5' (LOOSE) OF FILL ABOVE THE BOX WITH LIGHT COMPACTION EQUIPMENT SUCH AS PLATE COMPACTORS OR WALK BEHIND ROLLERS.

TRANSVERSE REINFORCEMENT IS PARALLEL TO THE CULVERT SPAN. LONGITUDINAL REINFORCEMENT IS PERPENDICULAR TO THE CULVERT SPAN.

NOTES:

1. 18-1B401 TOP, 1B402 TOP LONG.
   18-2B401 TOP, 2B402 TOP LONG.
2. 14-1B401 BOT., 1B403 BOT. LONG.
   14-2B401 BOT., 2B403 BOT. LONG.
3. 3-1B401 TOP, 1B402 TOP LONG. F.F.
   3-2B401 TOP, 2B402 TOP LONG. F.F.
4. 12-1B401 WALL, 1B403 WALL LONG. E.F.
   12-2B401 WALL, 2B403 WALL LONG. E.F.
5. 2-1B401 WALL, 1B403 WALL LONG. B.F.
   2-2B401 WALL, 2B403 WALL LONG. B.F.
6. 18-1B401, 1B410 TOP OF SLAB LONG
   18-1B401, 1B411 BOT. OF SLAB LONG
   18-2B401, 2B410 TOP OF SLAB LONG
   18-2B401, 2B411 BOT. OF SLAB LONG

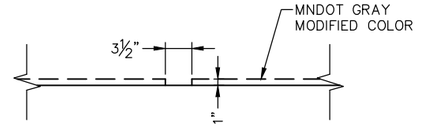

BARREL ARCHITECTURAL TREATMENT DETAIL
SPACED AT 5'-0" O.C.

NO.	DATE	BY	CHECK	DESIGN	REVISION / SUBMITTAL

DESIGNED BY: SMY | CHECKED BY: MTC
DRAWN BY: EBM | CHECKED BY: LKZ

AECOM Kimley»Horn

90% SUBMISSION - 01/22/16

METROPOLITAN COUNCIL

SOUTHWEST Green Line LRT Extension

CIVIL - VOLUME 4D
BLAKE RD PEDESTRIAN UNDERPASS
BRIDGE 27J60
UNDERPASS DETAILS AND REINF. 1

DISCIPLINE: STRUCTURES
SHEET NAME: CBR27J60-DTL-001

SHEET 4 OF 37

Jan. 13 2016 04:34 pm V:\3400_ADC\CAD\SEGMENT E1\PLAN SHEETS\STRUCTURES\27J60\CBR27J60-DTL-001.dwg By: Edgar.McKoy

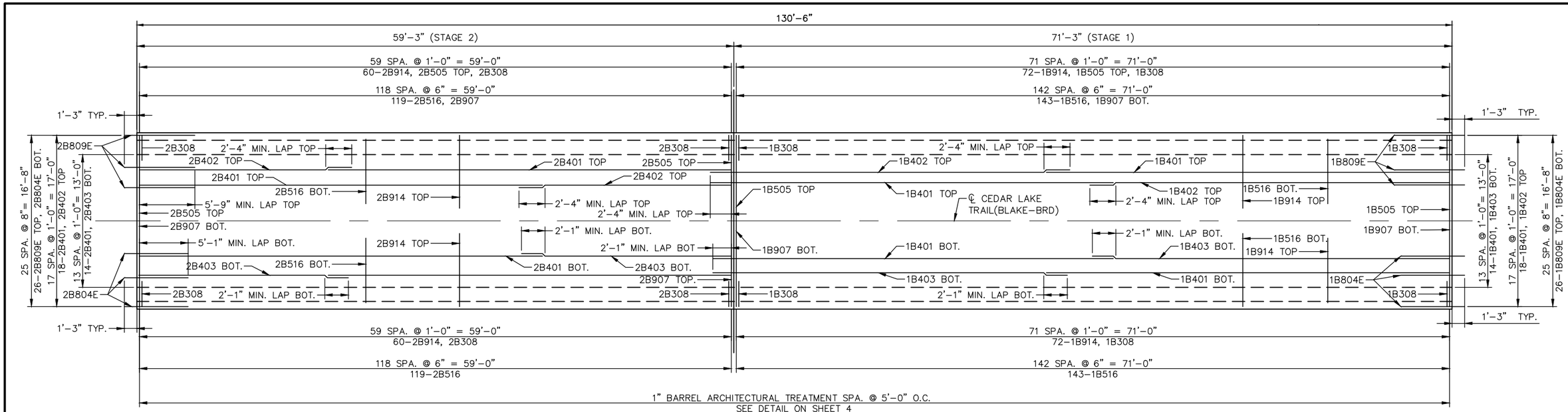

TOP OF TUNNEL REINFORCEMENT

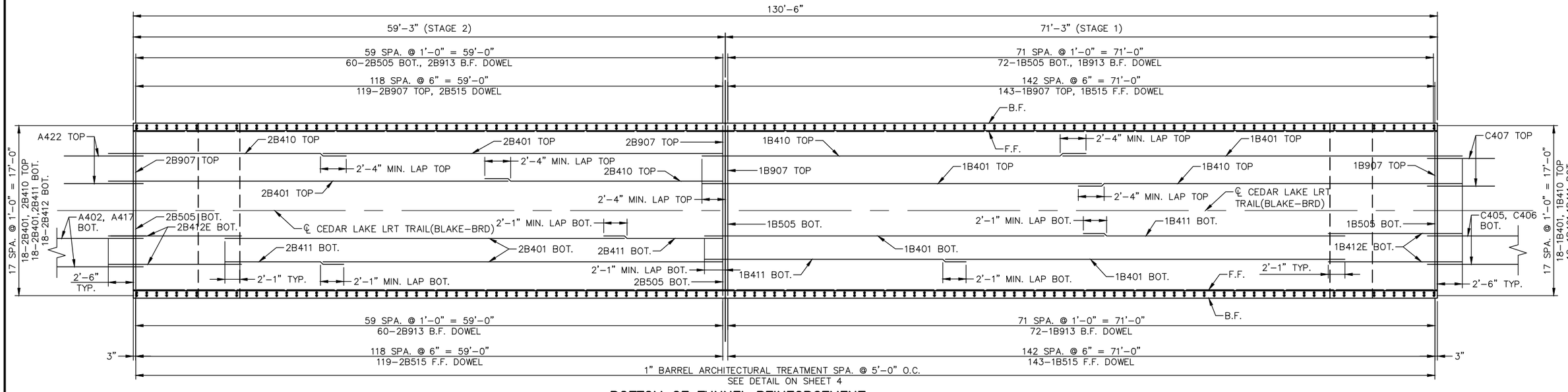

BOTTOM OF TUNNEL REINFORCEMENT

NO.	DATE	BY	CHECK	DESIGN	REVISION / SUBMITTAL

DESIGNED BY: SMY | CHECKED BY: MTC
DRAWN BY: EBM | CHECKED BY: LKZ

AECOM Kimley»Horn

90% SUBMISSION - 01/22/16

METROPOLITAN COUNCIL

SOUTHWEST Green Line LRT Extension

CIVIL - VOLUME 4D
BLAKE RD PEDESTRIAN UNDERPASS BRIDGE 27J60
UNDERPASS DETAILS AND REINF. 2

DISCIPLINE: STRUCTURES

SHEET NAME: CBR27J60-DTL-002

SHEET 5 OF 37

Jan, 13 2016 04:35 pm V:\3400_ADC\CAD\SEGMENT E1\PLAN SHEETS\STRUCTURES\27J60\CBR27J60-DTL-002.dwg By: Edgar.McKoy

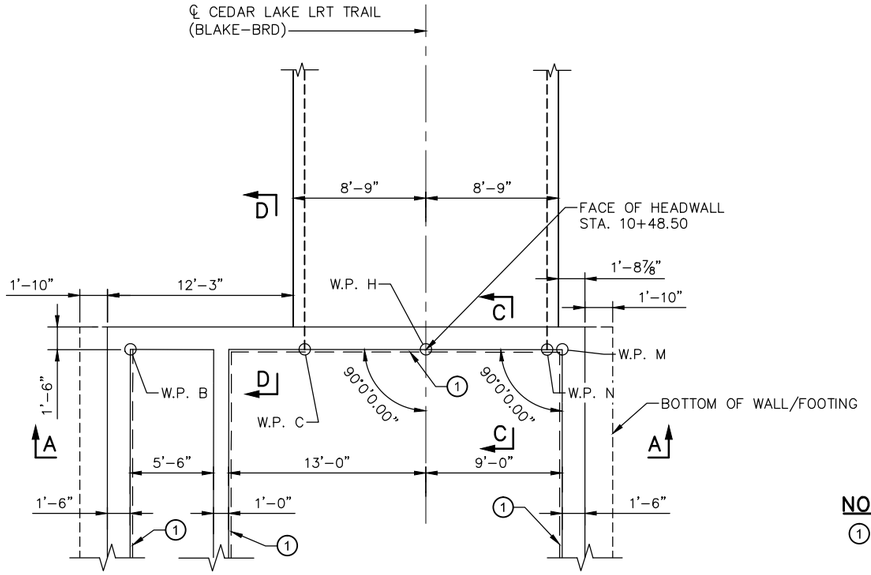

HEADWALL PLAN – WEST END

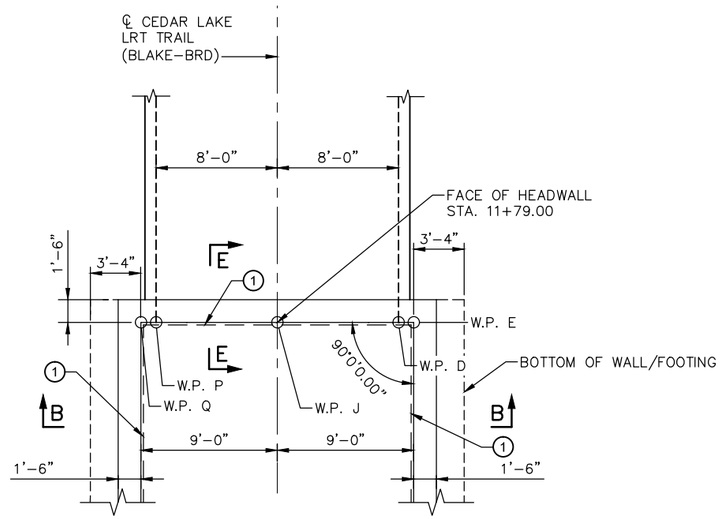

HEADWALL PLAN – EAST END

NOTES:

1. ARCHITECTURAL CONCRETE TEXTURE (STACKED STONE) WITH ARCHITECTURAL SURFACE FINISH (SINGLE COLOR). PATTERN SHALL EXTEND CONTINUOUSLY FROM RETAINING WALLS THROUGH HEADWALLS UNINTERRUPTED. ADJUST LENGTH OF STONE UNITS AS NEEDED.

   PIPE SLEEVE. SEE WIRE FENCE SHEET FOR DETAILS.

   MEMBRANE WATERPROOFING SYSTEM PER SPEC 2481.3.B.

   ATTACH FENCE ANCHORAGES TO PILE WITH SOLD NO. 6 GAGE COPPER WIRE WITH AN APPROVED TYPE CLAMP OR BRAZING (ONE ANCHORAGE PER END OF RAIL).

   ALL EXPOSED CONCRETE SURFACES TO BE COLORED MNDOT GRAY MODIFIED COLOR.

2. SEE SHEET 27 FOR P–1 PARAPET DETAILS
3. SEE SHEET 28 FOR MODIFIED P–1 PARAPET DETAILS
4. CENTER 10" LETTERS. ¾" RECESSED CAST INTO CONCRETE. PAINT ALL LETTER SURFACES BLACK. FONT: CENTURY GOTHIC

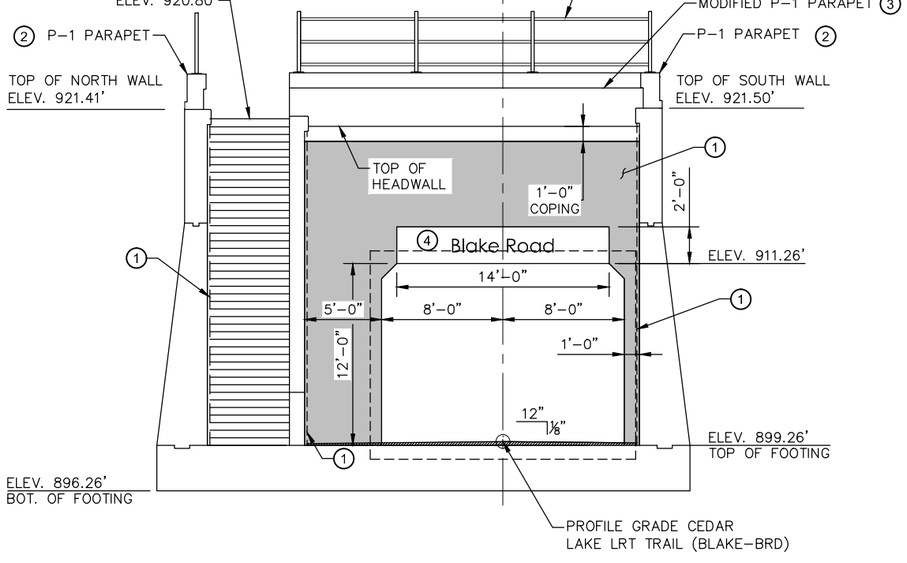

SECTION A–A

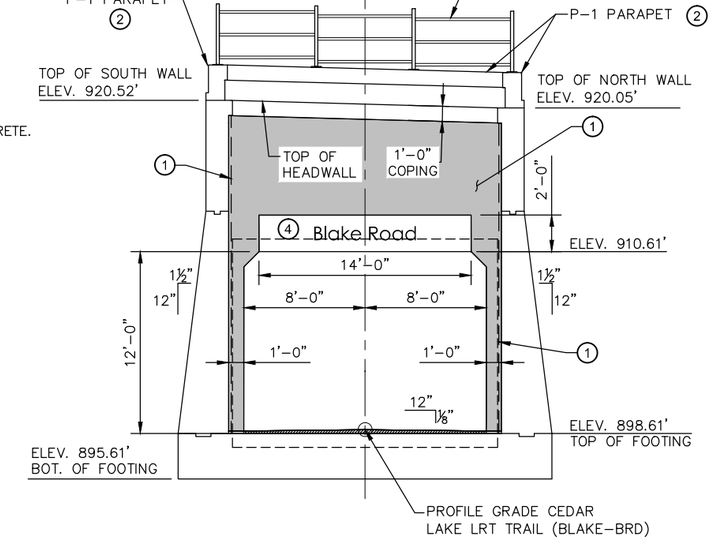

SECTION B–B

NO.	DATE	BY	CHECK	DESIGN	REVISION / SUBMITTAL

DESIGNED BY: SMY | CHECKED BY: MTC
DRAWN BY: AMC | CHECKED BY: LKZ

AECOM Kimley»Horn

90% SUBMISSION - 01/22/16

METROPOLITAN COUNCIL

SOUTHWEST Green Line LRT Extension

CIVIL - VOLUME 4D
BLAKE RD PEDESTRIAN UNDERPASS
BRIDGE 27J60
HEADWALL DETAILS 1

DISCIPLINE: STRUCTURES
SHEET NAME: CBR27J60-TRN-002

SHEET 6 OF 37

Jan, 13 2016 04:36 pm V:\3400_ADC\CAD\SEGMENT E1\PLAN SHEETS\STRUCTURES\27J60\CBR27J60-TRN-002.dwg By: Edgar.McKoy

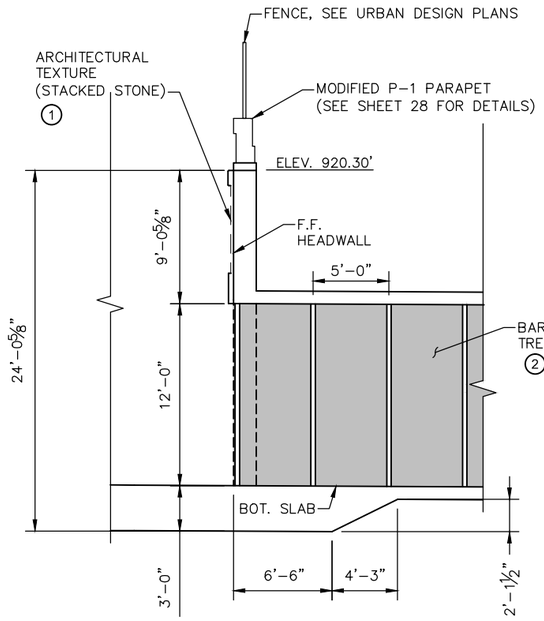

SECTION C–C

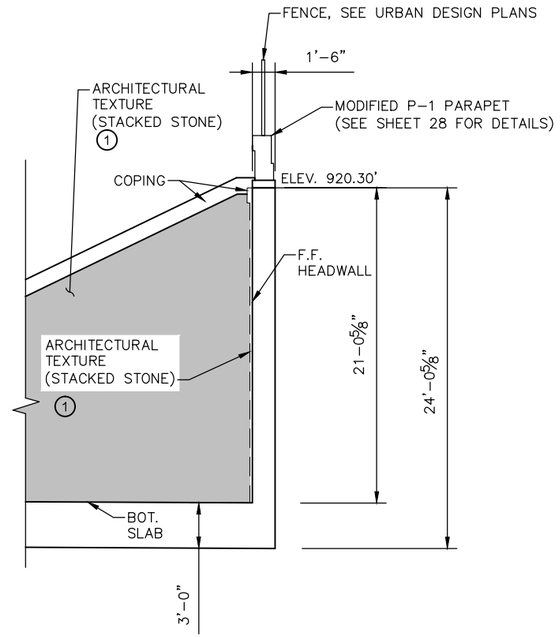

SECTION D–D

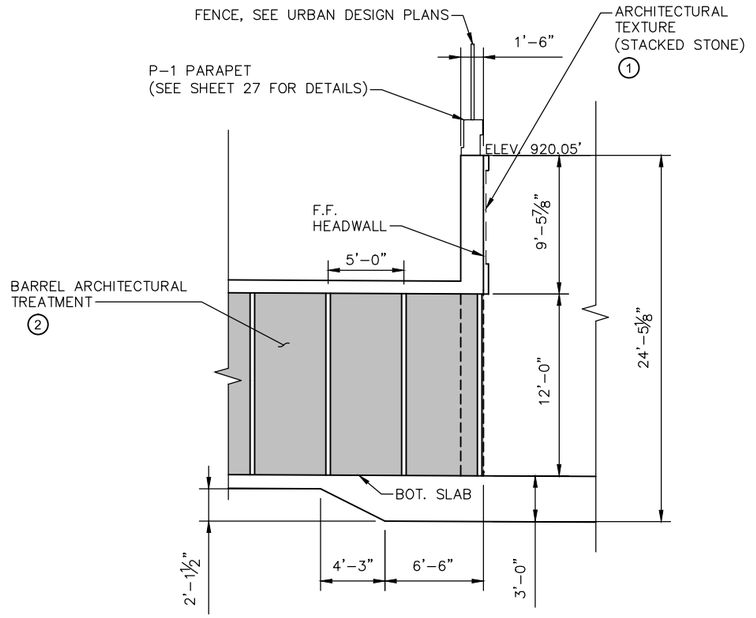

SECTION E–E

NOTES:

1. SEE SHEET 6 FOR ARCHITECTURAL TREATMENTS.
2. SEE SHEET 4 FOR BARREL ARCHITECTURAL TREATMENTS.

NO.	DATE	BY	CHECK	DESIGN	REVISION / SUBMITTAL

DESIGNED BY: SMY | CHECKED BY: MTC
DRAWN BY: AMC | CHECKED BY: LKZ

AECOM Kimley»Horn

90% SUBMISSION - 01/22/16

METROPOLITAN COUNCIL

SOUTHWEST Green Line LRT Extension

CIVIL - VOLUME 4D
BLAKE RD PEDESTRIAN UNDERPASS
BRIDGE 27J60
HEADWALL DETAILS 2

DISCIPLINE: STRUCTURES
SHEET NAME: CBR27J60-TRN-003

SHEET 7 OF 37

Jan, 13 2016 04:36 pm V:\3400_ADC\CAD\SEGMENT E1\PLAN SHEETS\STRUCTURES\27J60\CBR27J60-TRN-003.dwg By: Edgar.McKoy

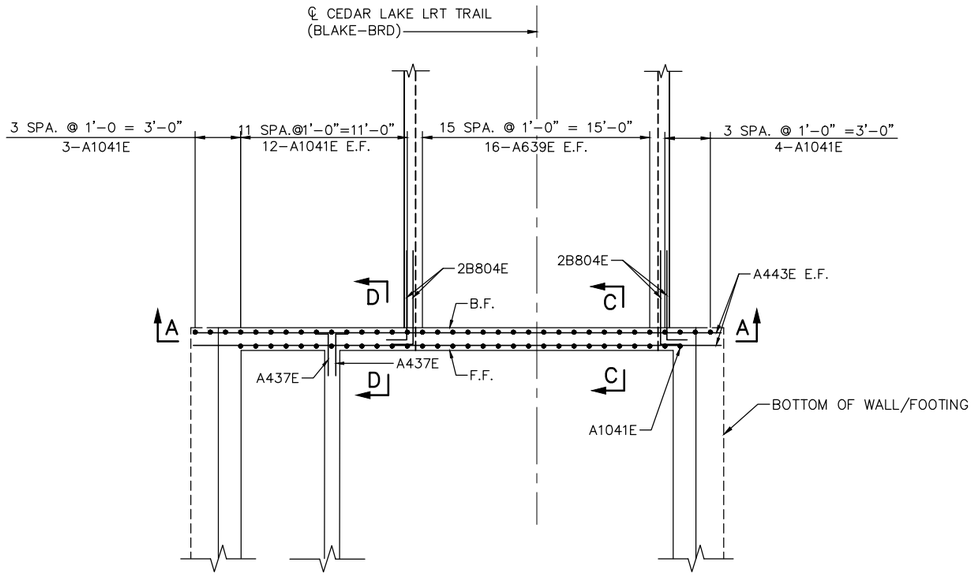

HEADWALL PLAN – WEST END

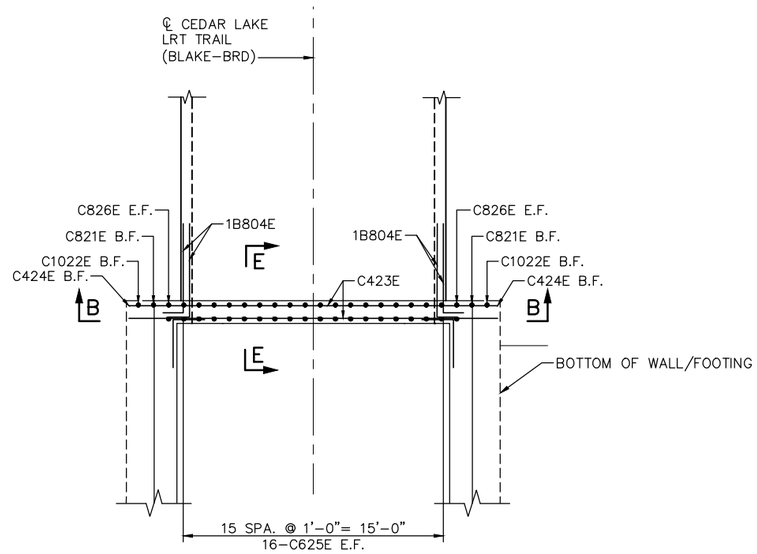

HEADWALL PLAN – EAST END

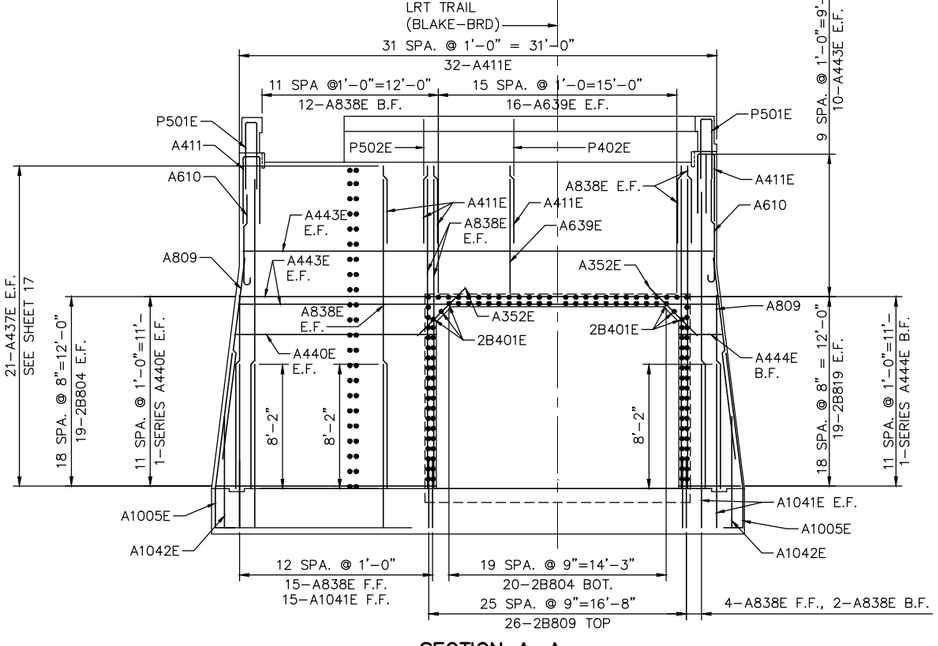

SECTION A–A

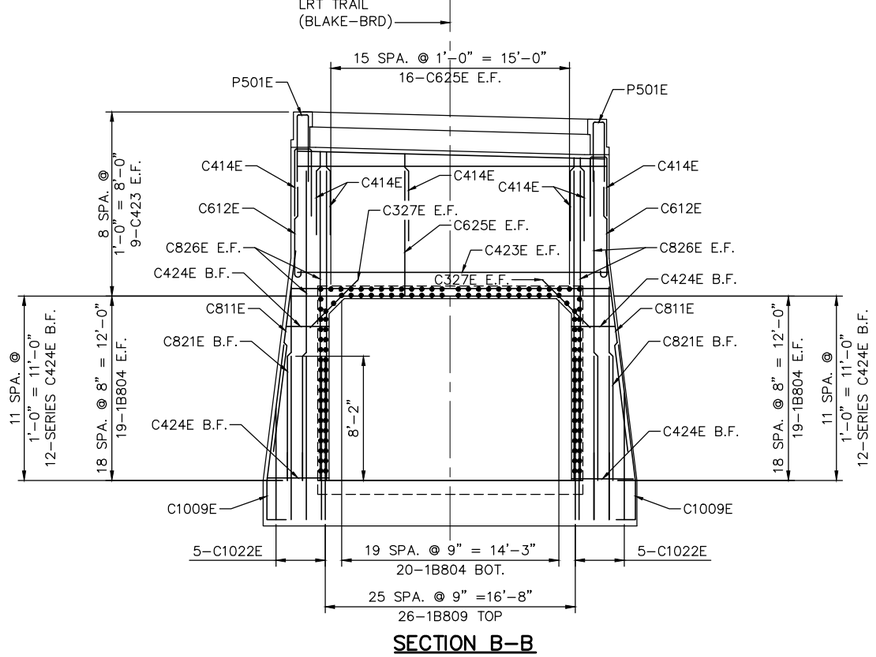

SECTION B–B

NO.	DATE	BY	CHECK	DESIGN	REVISION / SUBMITTAL

DESIGNED BY: SMY | CHECKED BY: MTC
DRAWN BY: AMC | CHECKED BY: LKZ

AECOM Kimley»Horn

90% SUBMISSION - 01/22/16

METROPOLITAN COUNCIL

SOUTHWEST Green Line LRT Extension

CIVIL - VOLUME 4D
BLAKE RD PEDESTRIAN UNDERPASS
BRIDGE 27J60
HEADWALL REINFORCEMENT 1

DISCIPLINE: STRUCTURES

SHEET NAME: CBR27J60-DTL-003

SHEET 8 OF 37

Jan, 13 2016 04:37 pm V:\3400_ADC\CAD\SEGMENT E1\PLAN SHEETS\STRUCTURES\27J60\CBR27J60-DTL-003.dwg By: Edgar.McKoy

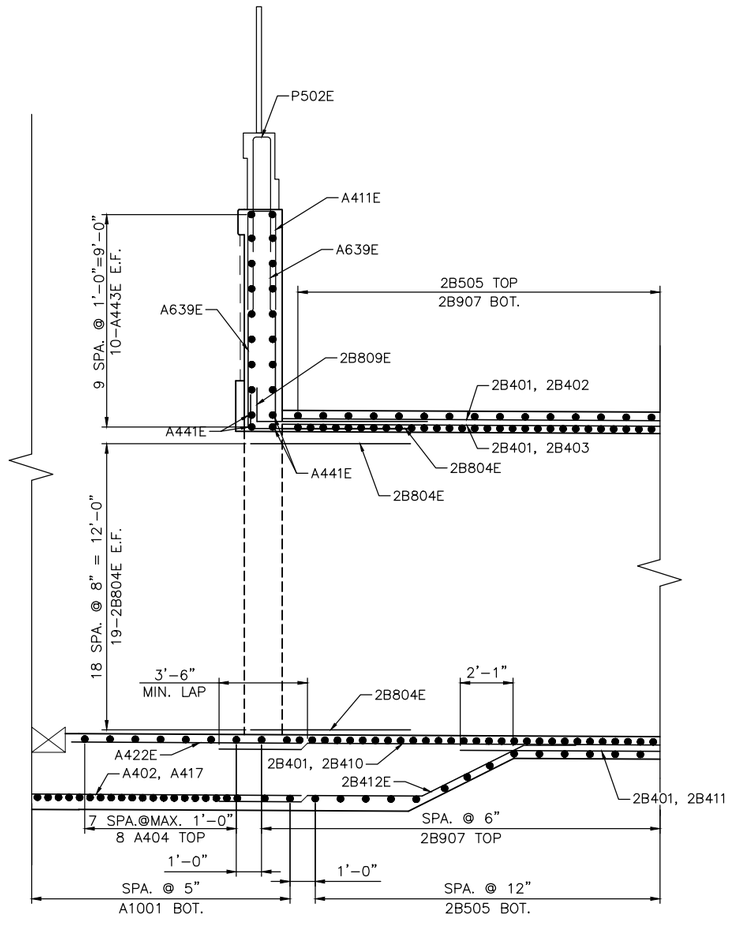

SECTION C-C

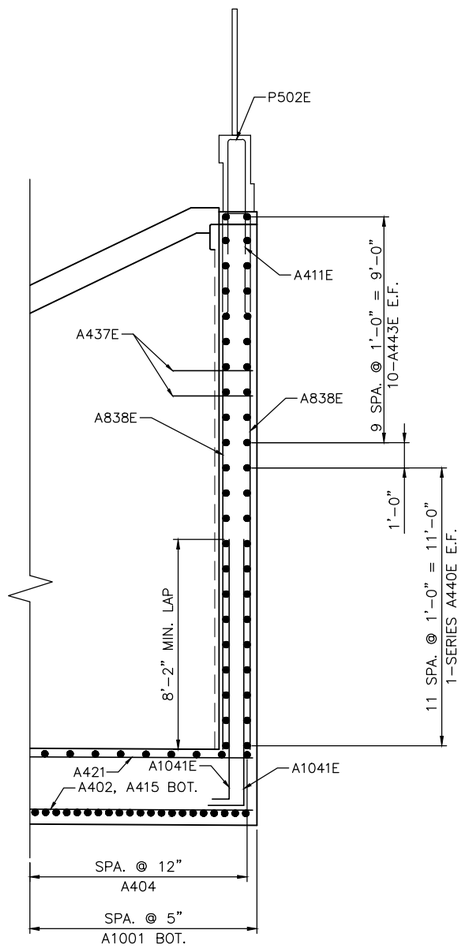

SECTION D-D

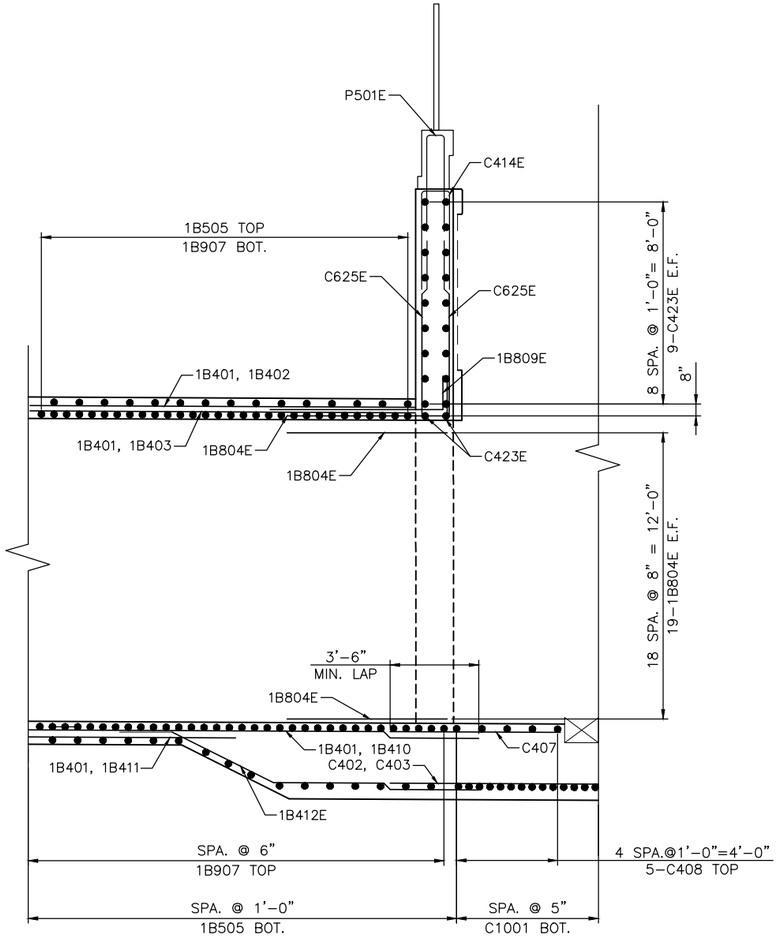

SECTION E-E

NOTES:

1. P501E IS EQUIVALENT TO "BAR Q" ON SHEET 27.
2. P502E IS EQUIVALENT TO THE MODIFIED "BAR Q" ON SHEET 28.

NO.	DATE	BY	CHECK	DESIGN	REVISION / SUBMITTAL

DESIGNED BY: SMY | CHECKED BY: MTC
DRAWN BY: AMC | CHECKED BY: LKZ

AECOM Kimley»Horn

90% SUBMISSION - 01/22/16

METROPOLITAN COUNCIL

SOUTHWEST Green Line LRT Extension

CIVIL - VOLUME 4D
BLAKE RD PEDESTRIAN UNDERPASS
BRIDGE 27J60
HEADWALL REINFORCEMENT 2

DISCIPLINE: STRUCTURES
SHEET NAME: CBR27J60-DTL-004

SHEET 9 OF 37

Jan, 13 2016 04:38 pm V:\3400_ADC\CAD\SEGMENT E1\PLAN SHEETS\STRUCTURES\27J60\CBR27J60-DTL-004.dwg By: Edgar.McKoy

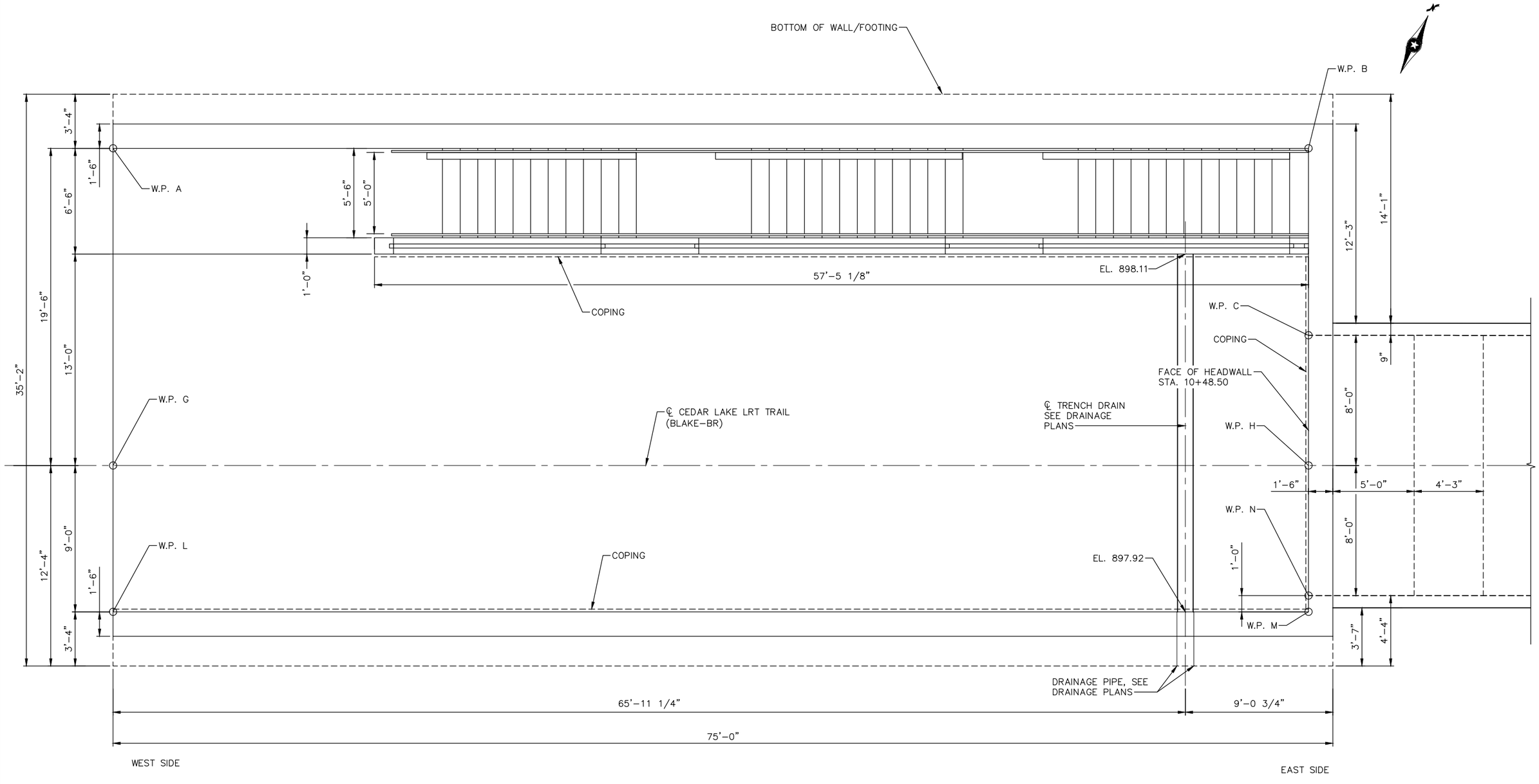

WEST APPROACH PLAN

NO.	DATE	BY	CHECK	DESIGN	REVISION / SUBMITTAL

DESIGNED BY: SMY | CHECKED BY: MTC
DRAWN BY: EBM | CHECKED BY: LKZ

AECOM Kimley»Horn

90% SUBMISSION - 01/22/16

METROPOLITAN COUNCIL

SOUTHWEST Green Line LRT Extension

CIVIL - VOLUME 4D
BLAKE RD PEDESTRIAN UNDERPASS
BRIDGE 27J60
WEST APPROACH DETAILS 1

DISCIPLINE: STRUCTURES
SHEET NAME: CBR27J60-TRN-004

SHEET 10 OF 37

Jan. 13 2016 04:39 pm V:\3400_ADC\CAD\SEGMENT E1\PLAN SHEETS\STRUCTURES\27J60\CBR27J60-TRN-004.dwg By: Edgar.McKoy

NOTES:

(1) REFER TO SHEET FOR ARCHITECTURAL TREATMENT DETAILS.

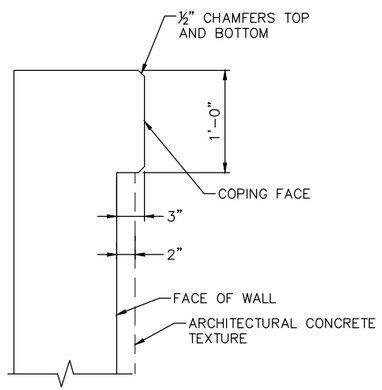

COPING DETAIL

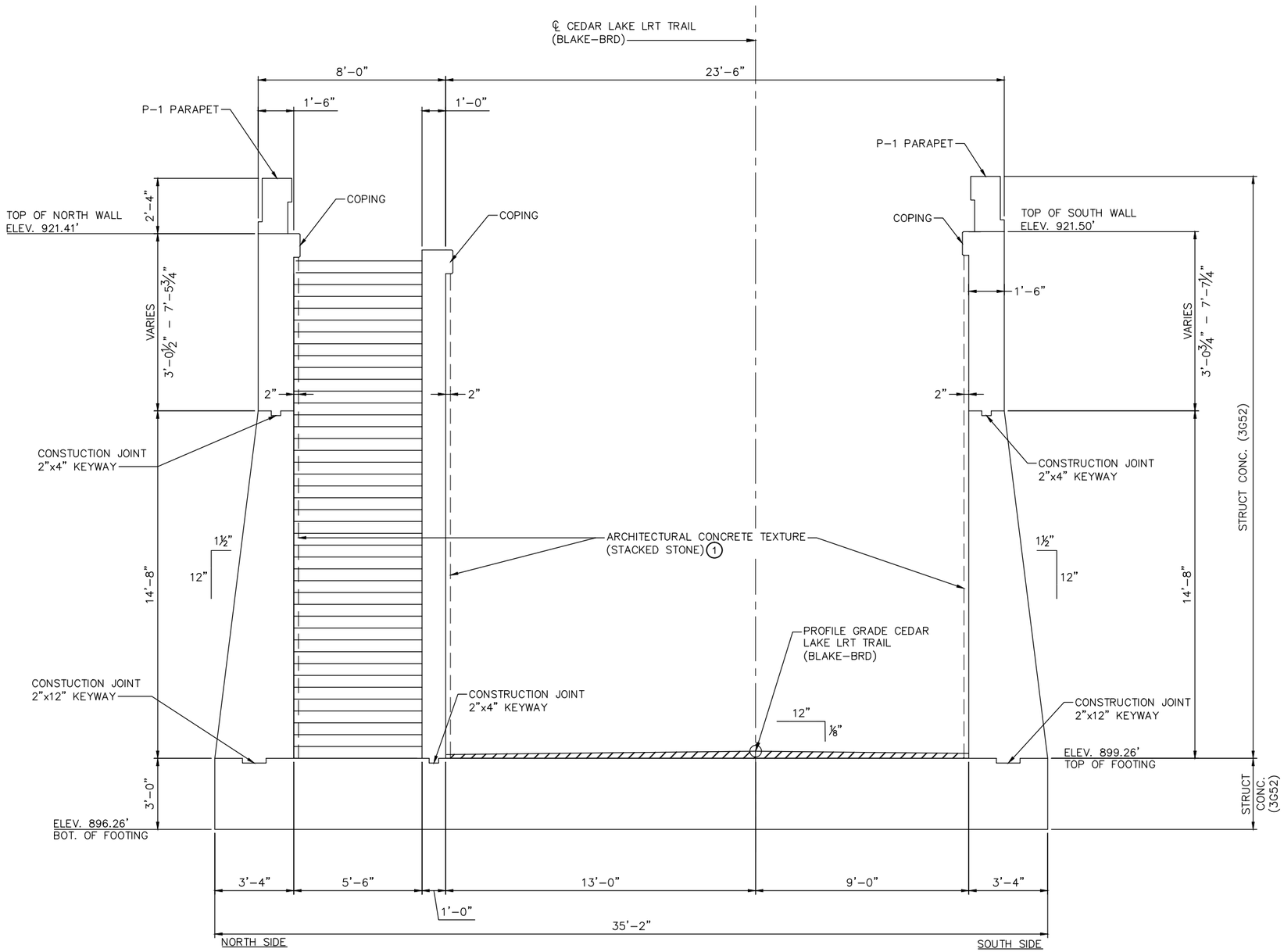

WEST END SECTION
STATION 10+48.50

NO.	DATE	BY	CHECK	DESIGN	REVISION / SUBMITTAL

DESIGNED BY: SMY | CHECKED BY: MTC
DRAWN BY: EBM | CHECKED BY:

AECOM Kimley»Horn

90% SUBMISSION - 01/22/16

METROPOLITAN COUNCIL

SOUTHWEST Green Line LRT Extension

CIVIL - VOLUME 4D
BLAKE RD PEDESTRIAN UNDERPASS
BRIDGE 27J60
WEST APPROACH DETAILS 2

DISCIPLINE: STRUCTURES

SHEET NAME: CBR27J60-TRN-005

SHEET 11 OF 37

Jan, 13 2016 04:40 pm V:\3400_ADC\CAD\SEGMENT E1\PLAN SHEETS\STRUCTURES\27J60\CBR27J60-TRN-005.dwg By: Edgar.McKoy

NOTES:

1. SEE SHEET 27 FOR P-1 PARAPET DETAILS.
2. VERTICAL CURVE STATIONS AND ELEVATIONS ARE ALONG THE CEDAR LAKE LRT TRAIL ALIGNMENT.

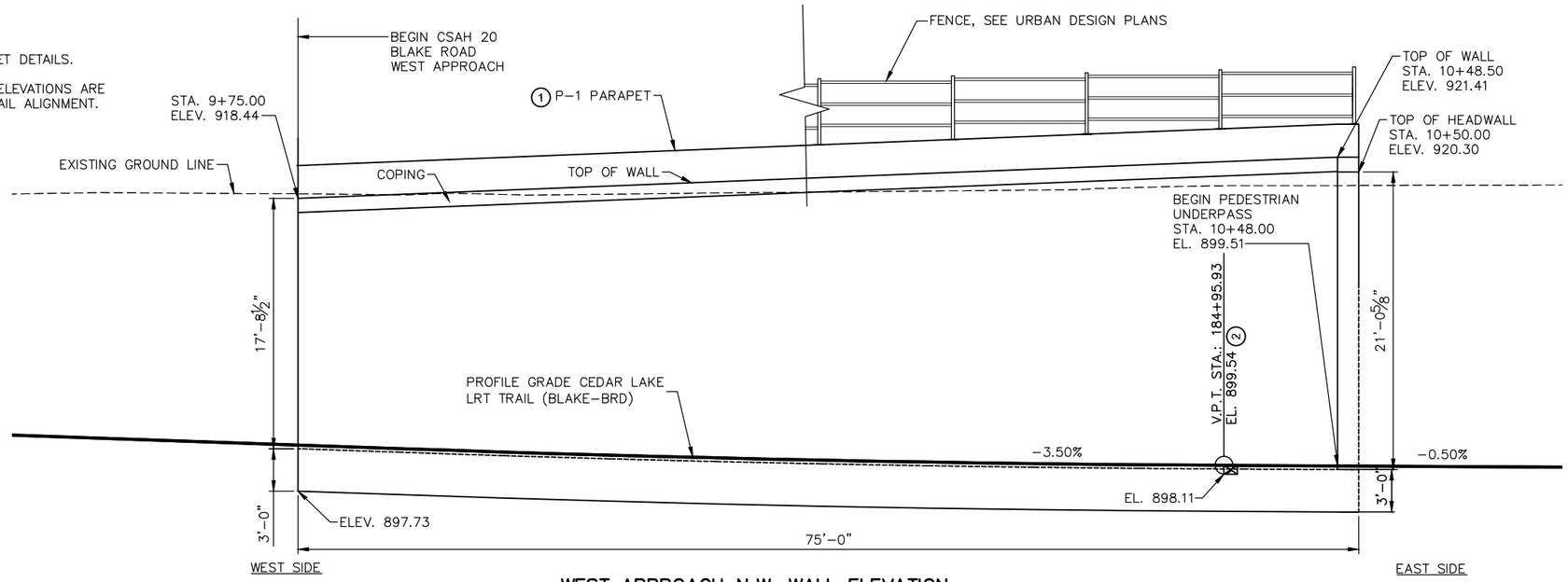

WEST APPROACH N.W. WALL ELEVATION

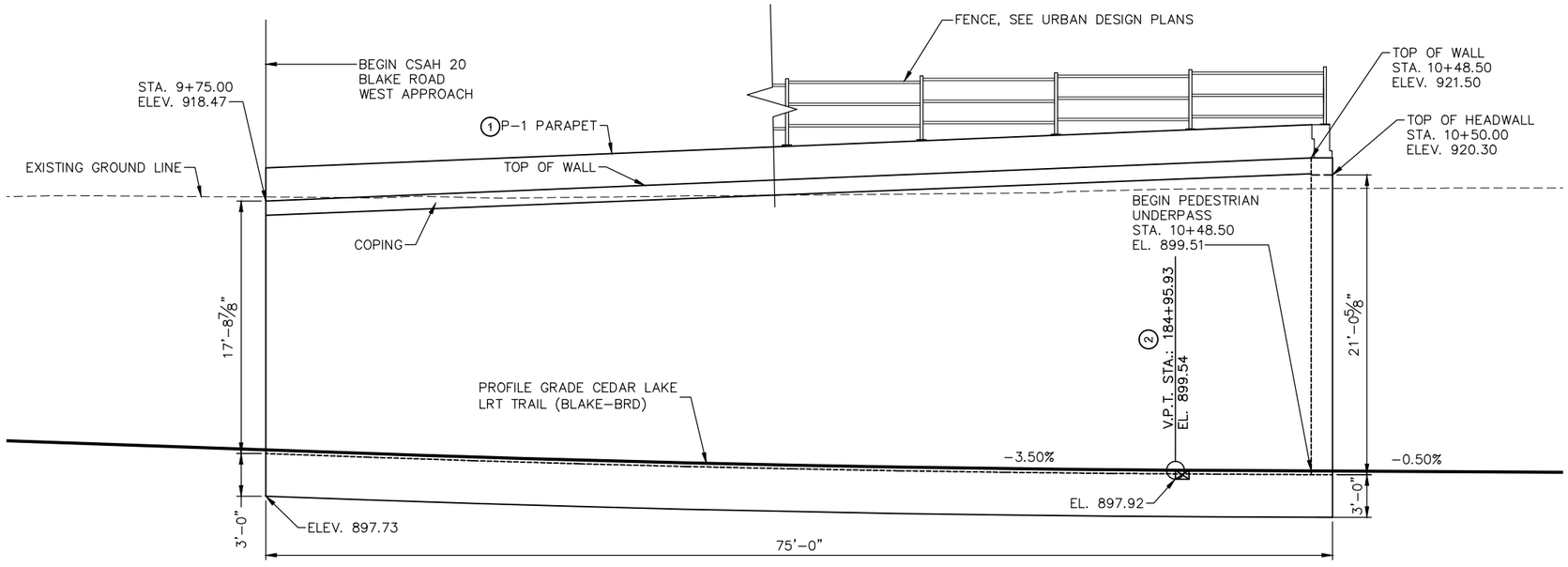

WEST APPROACH S.W. WALL ELEVATION

NO.	DATE	BY	CHECK	DESIGN	REVISION / SUBMITTAL

DESIGNED BY: SMY | CHECKED BY: MTC
DRAWN BY: EBM | CHECKED BY: LKZ

AECOM Kimley»Horn

90% SUBMISSION - 01/22/16

METROPOLITAN COUNCIL

SOUTHWEST Green Line LRT Extension

CIVIL - VOLUME 4D
BLAKE RD PEDESTRIAN UNDERPASS BRIDGE 27J60
WEST APPROACH WALL DETAILS

DISCIPLINE: STRUCTURES

SHEET NAME: CBR27J60-DTL-005

SHEET 12 OF 37

Jan, 13 2016 04:42 pm V:\3400_ADC\CAD\SEGMENT E1\PLAN SHEETS\STRUCTURES\27J60\CBR27J60-DTL-005.dwg By: Edgar.McKoy

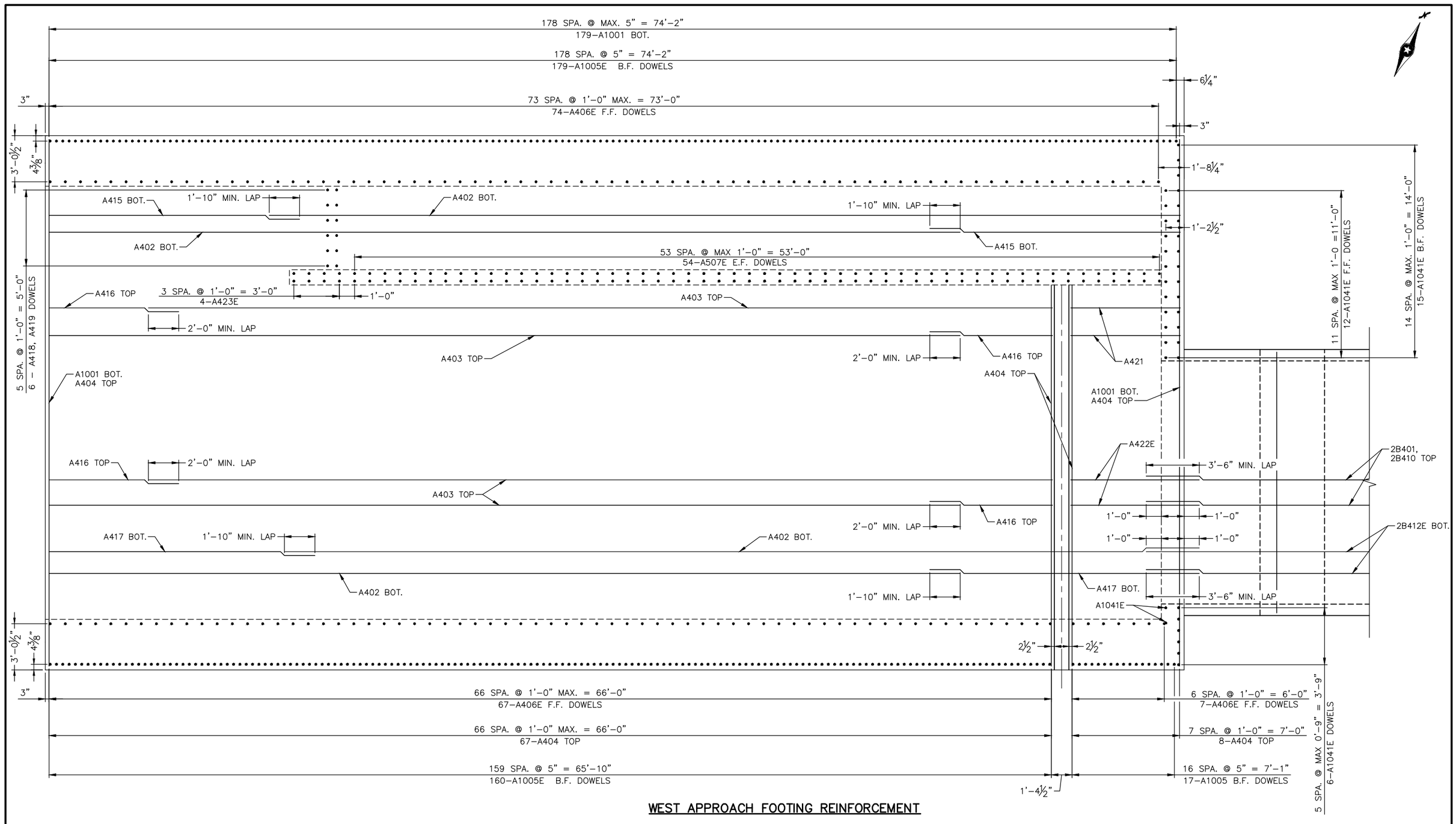

WEST APPROACH FOOTING REINFORCEMENT

NO.	DATE	BY	CHECK	DESIGN	REVISION / SUBMITTAL

DESIGNED BY: SMY | CHECKED BY: MTC
DRAWN BY: EBM | CHECKED BY: LKZ

AECOM Kimley»Horn

90% SUBMISSION - 01/22/16

METROPOLITAN COUNCIL

SOUTHWEST Green Line LRT Extension

CIVIL - VOLUME 4D
BLAKE RD PEDESTRIAN UNDERPASS
BRIDGE 27J60
WEST APPROACH REINFORCEMENT 1

DISCIPLINE: STRUCTURES

SHEET NAME: CBR27J60-DTL-006

SHEET 13 OF 37

Jan, 13 2016 04:43 pm V:\3400_ADC\CAD\SEGMENT E1\PLAN SHEETS\STRUCTURES\27J60\CBR27J60-DTL-006.dwg By: Edgar.McKoy

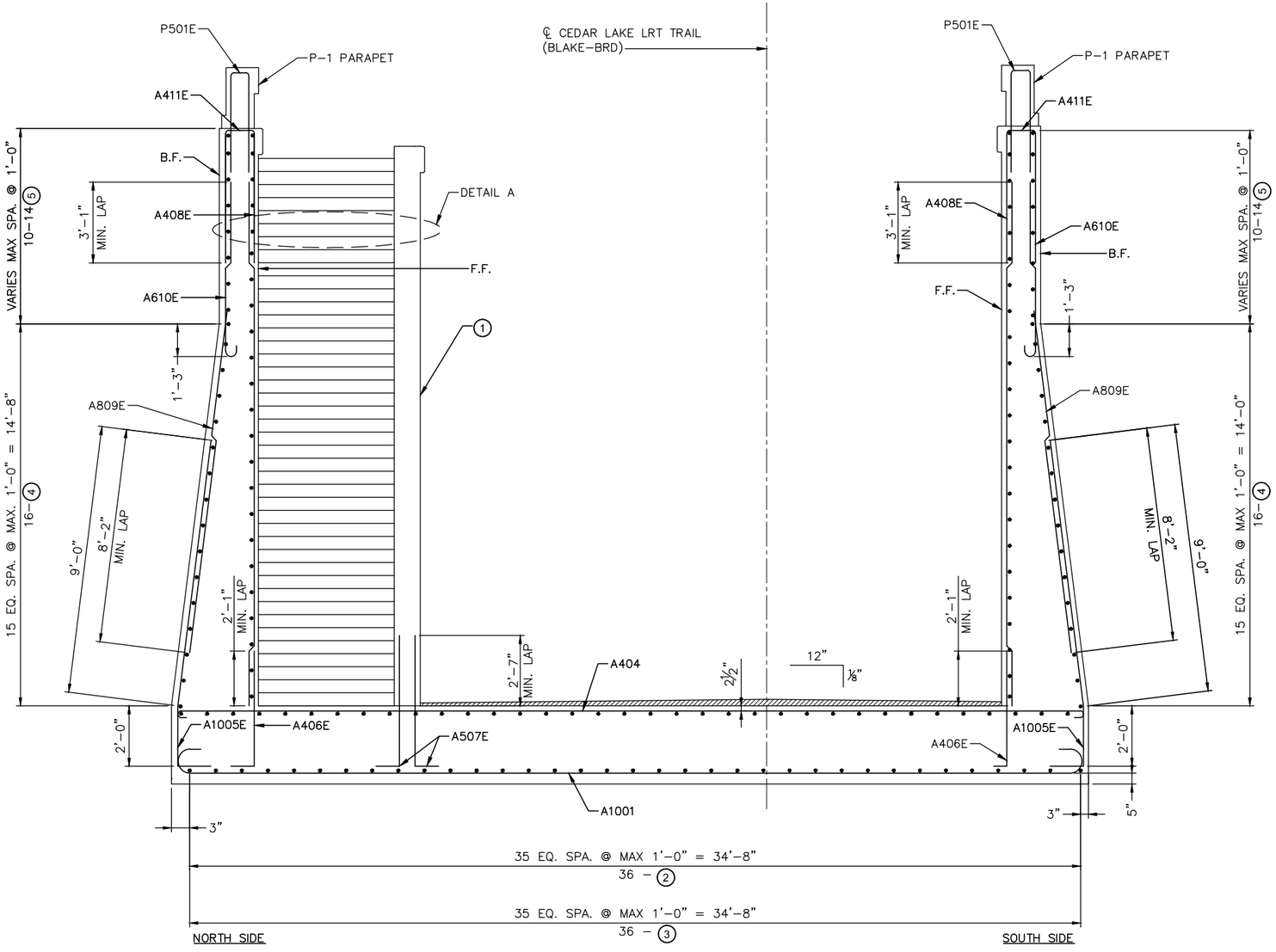

℄ CEDAR LAKE LRT TRAIL
(BLAKE-BRD)

WEST APPROACH REINFORCEMENT

NOTES:

FOR AESTHETIC DETAILS REQUIREMENTS REFER TO SHEET 6

(1) SEE STAIR DETAIL FOR REINFORCEMENT ON SHEET 17.
(2) TOP OF FOOTING – LONGITUDINAL A403, A416
(3) BOTTOM OF FOOTING – LONGITUDINAL A402 & A415
(4) WALL – LONGITUDINAL A412E & A417E E.F.
(5) WALL – LONGITUDINAL A413E & A414E E.F.

F.F. DENOTES FRONT FACE
B.F. DENOTES BACK FACE
E.F. DENOTES EACH FACE

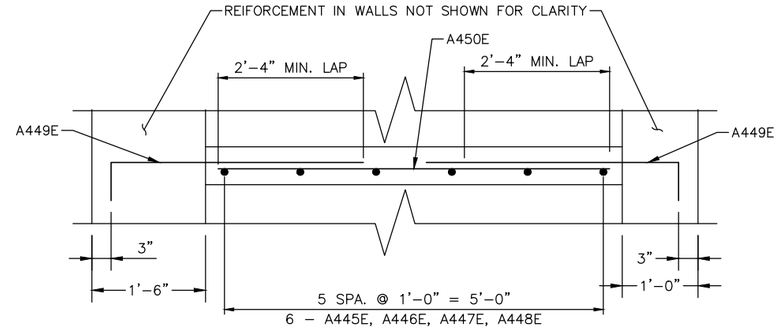

DETAIL A – STAIR REINFORCEMENT

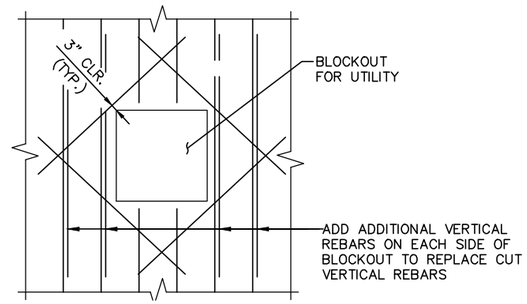

UTILITY BLOCKOUT DETAIL

NO.	DATE	BY	CHECK	DESIGN	REVISION / SUBMITTAL

DESIGNED BY: SMY | CHECKED BY: MTC
DRAWN BY: EBM | CHECKED BY:

AECOM Kimley»Horn

90% SUBMISSION - 01/22/16

METROPOLITAN COUNCIL

SOUTHWEST Green Line LRT Extension

CIVIL - VOLUME 4D
BLAKE RD PEDESTRIAN UNDERPASS
BRIDGE 27J60
WEST APPROACH REINFORCEMENT 2

DISCIPLINE: STRUCTURES
SHEET NAME: CBR27J60-DTL-007

SHEET 14 OF 37

Jan, 13 2016 04:44 pm V:\3400_ADC\CAD\SEGMENT E1\PLAN SHEETS\STRUCTURES\27J60\CBR27J60-DTL-007.dwg By: Edgar.McKoy

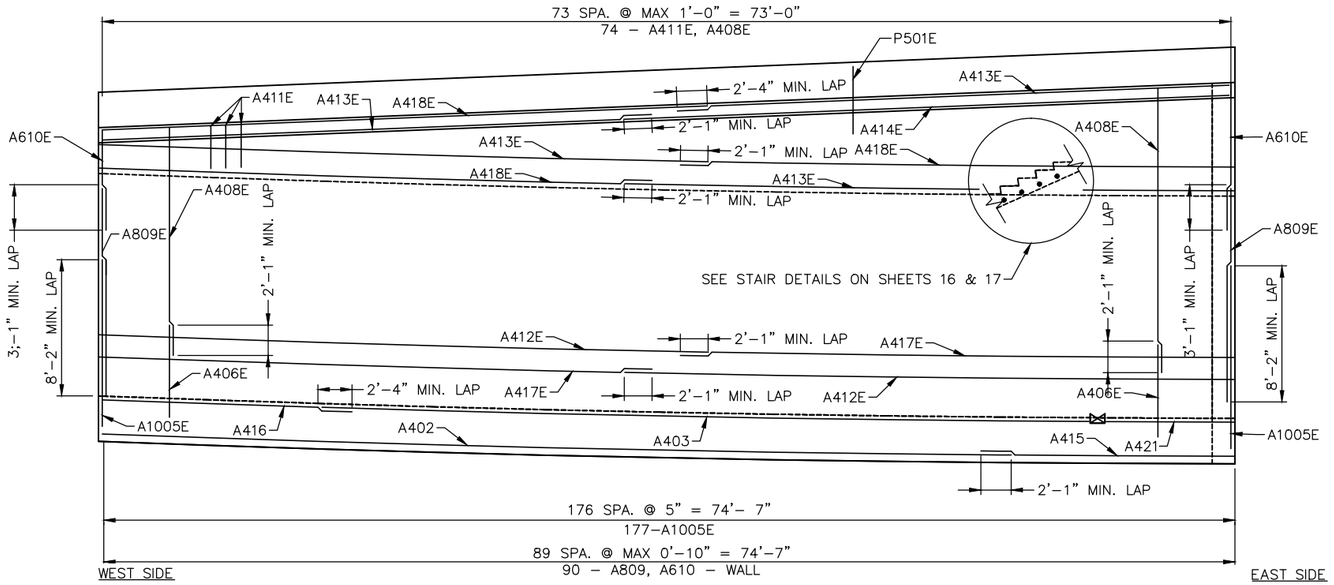

WEST APPROACH N.W. WALL REINFORCEMENT

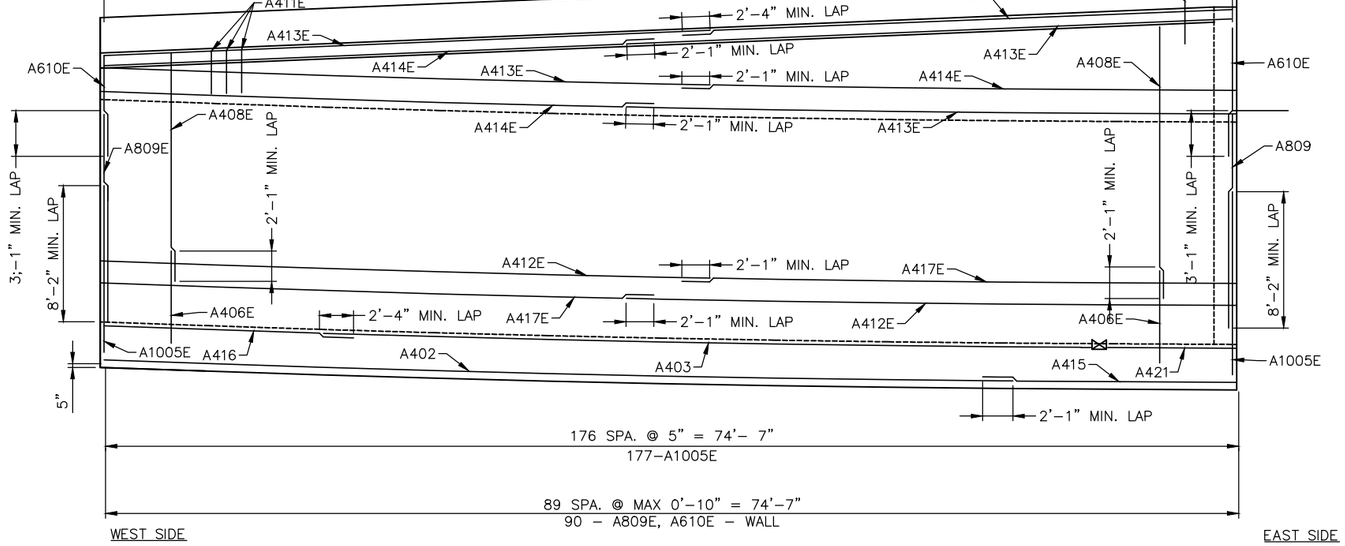

WEST APPROACH S.W. WALL REINFORCEMENT

NOTES:

1. P501E IS EQUIVALENT TO "BAR Q" ON SHEET 27

NO.	DATE	BY	CHECK	DESIGN	REVISION / SUBMITTAL

DESIGNED BY: SMY | CHECKED BY: MTC
DRAWN BY: EBM | CHECKED BY: LKZ

AECOM Kimley»Horn

90% SUBMISSION - 01/22/16

METROPOLITAN COUNCIL

SOUTHWEST Green Line LRT Extension

CIVIL - VOLUME 4D
BLAKE RD PEDESTRIAN UNDERPASS
BRIDGE 27J60
WEST APPROACH WALL REINFORCEMENT

DISCIPLINE: STRUCTURES
SHEET NAME: CBR27J60-DTL-008

SHEET 15 OF 37

Jan, 13 2016 04:47 pm V:\3400_ADC\CAD\SEGMENT E1\PLAN SHEETS\STRUCTURES\27J60\CBR27J60-DTL-008.dwg By: Edgar.McKoy

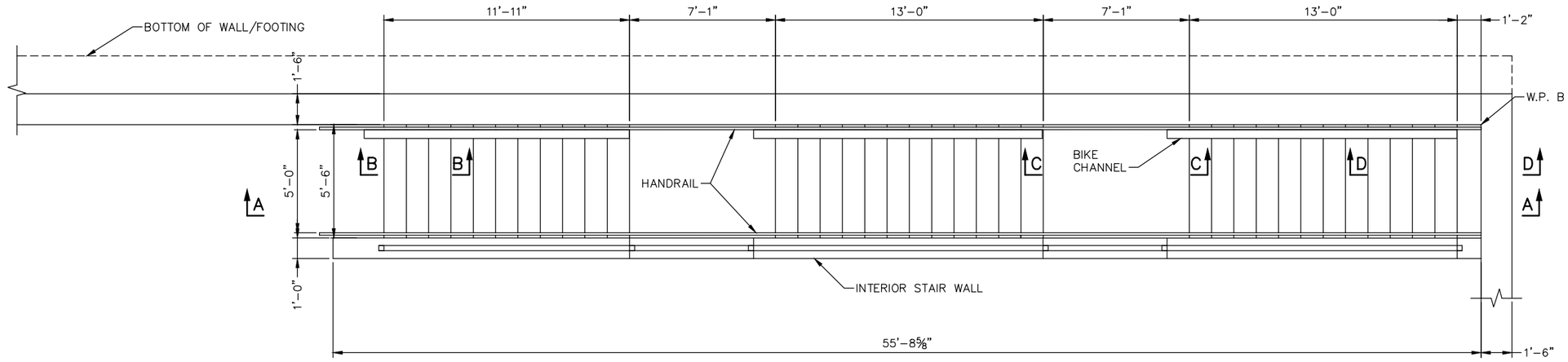

NOTES:

INTERIOR STAIR WALL REINFORCEMENT NOT SHOWN FOR CLARITY. SEE SHEET 17.

WEST STAIR PLAN

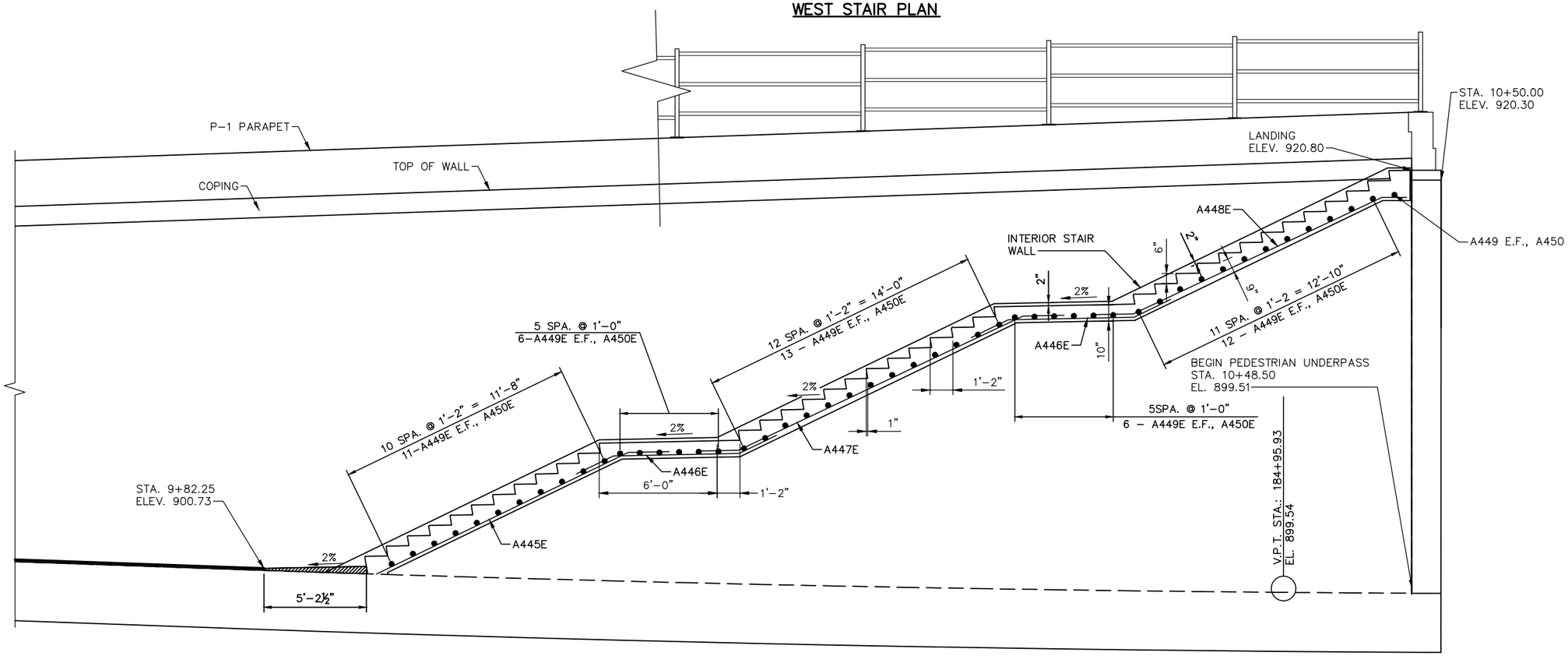

WEST STAIR SECTION A-A

NO.	DATE	BY	CHECK	DESIGN	REVISION / SUBMITTAL

DESIGNED BY: SMY | CHECKED BY: MTC
DRAWN BY: EBM | CHECKED BY: LKZ

AECOM Kimley»Horn

90% SUBMISSION - 01/22/16

METROPOLITAN COUNCIL

SOUTHWEST Green Line LRT Extension

CIVIL - VOLUME 4D
BLAKE RD PEDESTRIAN UNDERPASS
BRIDGE 27J60
WEST APPROACH STAIR DETAILS 1

DISCIPLINE: STRUCTURES
SHEET NAME: CBR27J60-DTL-009

SHEET 16 OF 37

Jan, 13 2016 04:50 pm V:\3400_ADC\CAD\SEGMENT E1\PLAN SHEETS\STRUCTURES\27J60\CBR27J60-DTL-009.dwg By: Edgar.McKoy

NOTES:

ALL MINIMUM LAP LENGTHS ON THIS SHEET ARE 2'–1" UON.

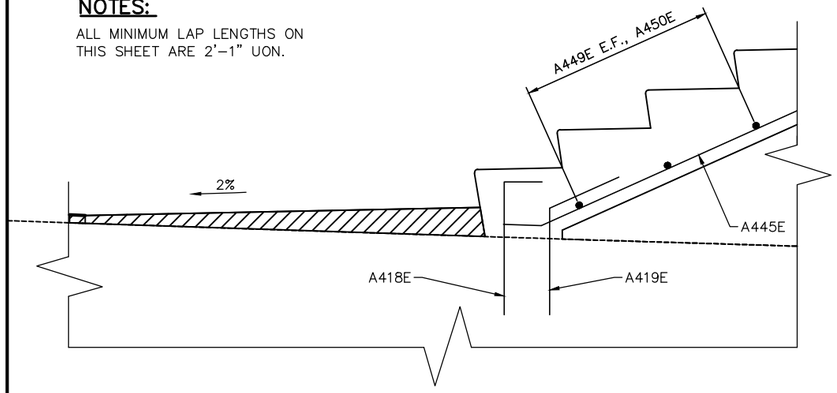

SECTION B–B

SLAB REINFORCEMENT NOT SHOWN FOR CLARITY

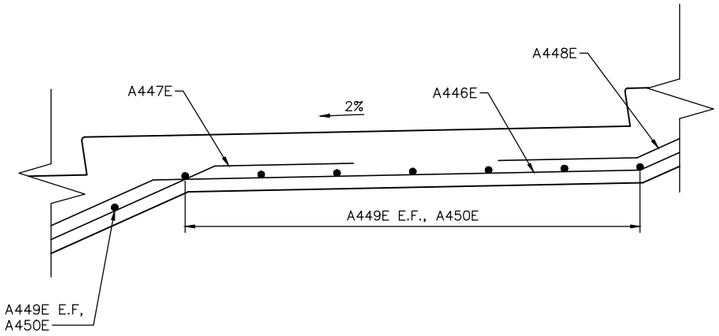

SECTION C–C

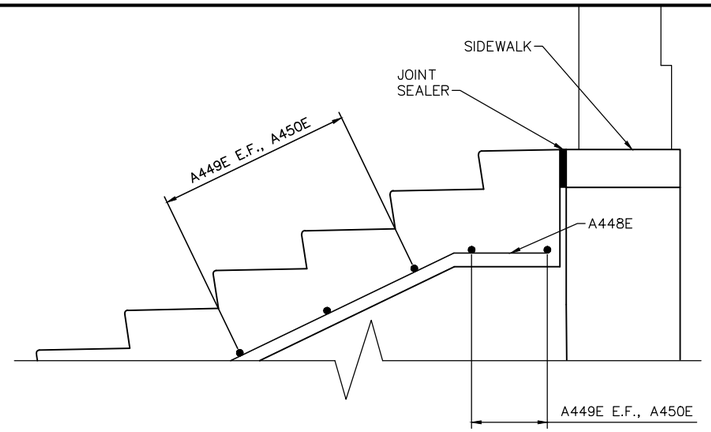

SECTION D–D

HEADWALL REINFORCEMENT NOT SHOWN FOR CLARITY

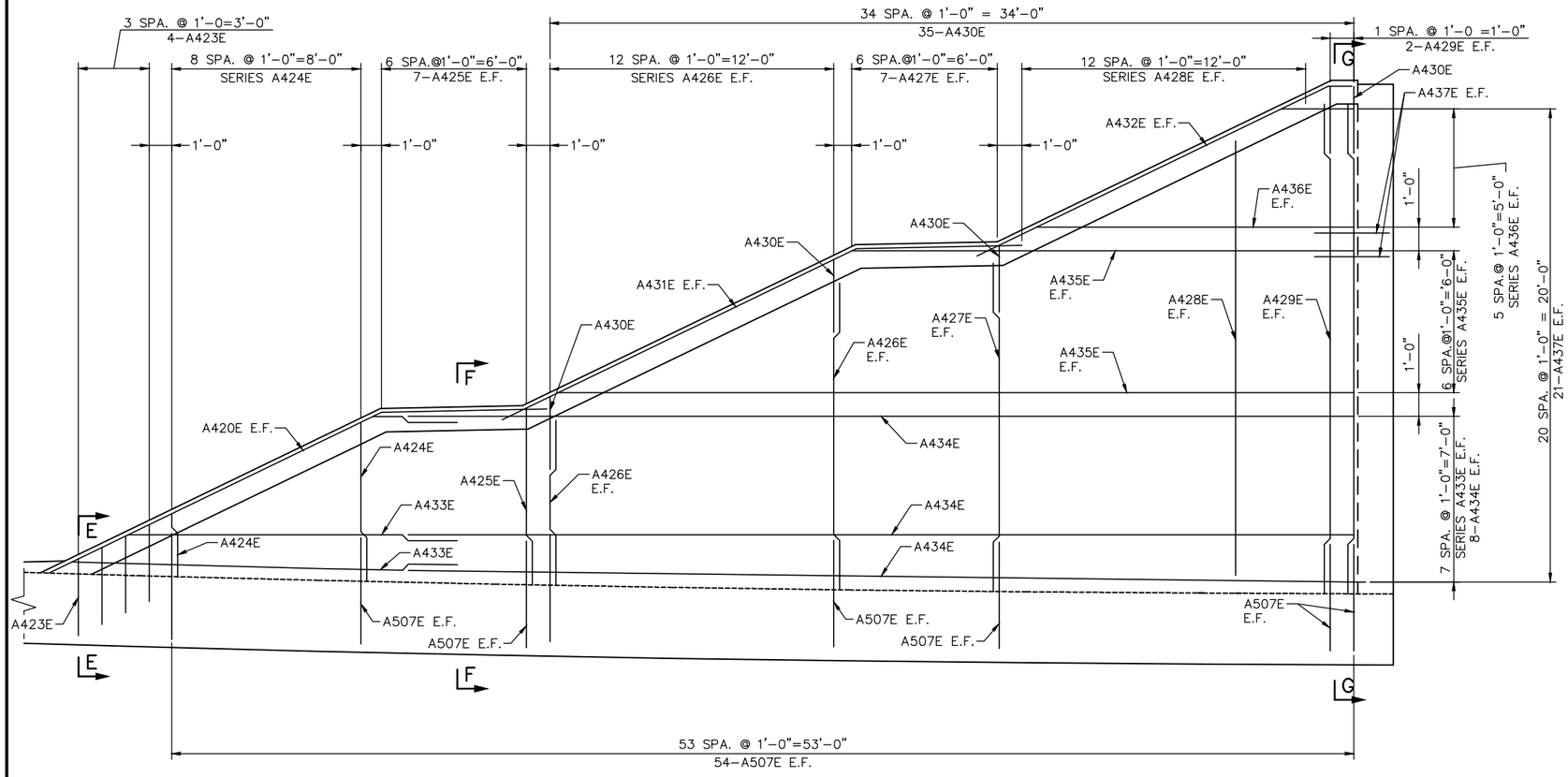

INTERIOR WALL REINFORCEMENT

HEADWALL AND SLAB REINFORCEMENT NOT SHOWN FOR CLARITY

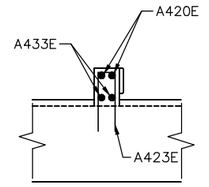

SECTION E–E

SLAB REINFORCEMENT NOT SHOWN FOR CLARITY

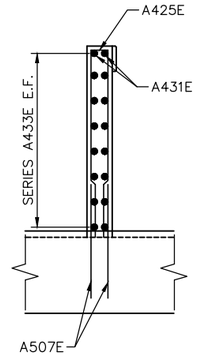

SECTION F–F

SLAB REINFORCEMENT NOT SHOWN FOR CLARITY

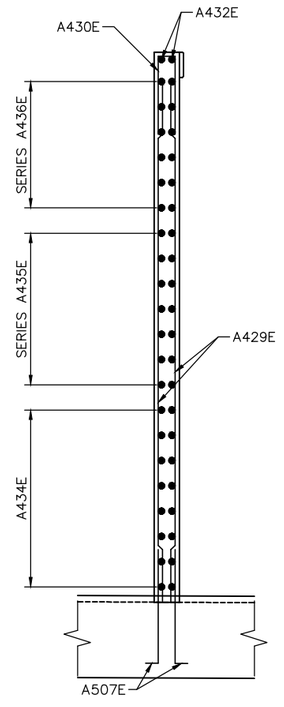

SECTION G–G

SLAB REINFORCEMENT NOT SHOWN FOR CLARITY

NO.	DATE	BY	CHECK	DESIGN	REVISION / SUBMITTAL

DESIGNED BY: SMY | CHECKED BY: MTC
DRAWN BY: EBM | CHECKED BY: LKZ

AECOM Kimley»Horn

90% SUBMISSION - 01/22/16

METROPOLITAN COUNCIL

SOUTHWEST Green Line LRT Extension

CIVIL - VOLUME 4D
BLAKE RD PEDESTRIAN UNDERPASS
BRIDGE 27J60
WEST APPROACH STAIR DETAILS 2

DISCIPLINE: STRUCTURES

SHEET NAME: CBR27J60-DTL-010

SHEET 17 OF 37

Jan, 13 2016 04:51 pm V:\3400_ADC\CAD\SEGMENT E1\PLAN SHEETS\STRUCTURES\27J60\CBR27J60-DTL-010.dwg By: Edgar.McKoy

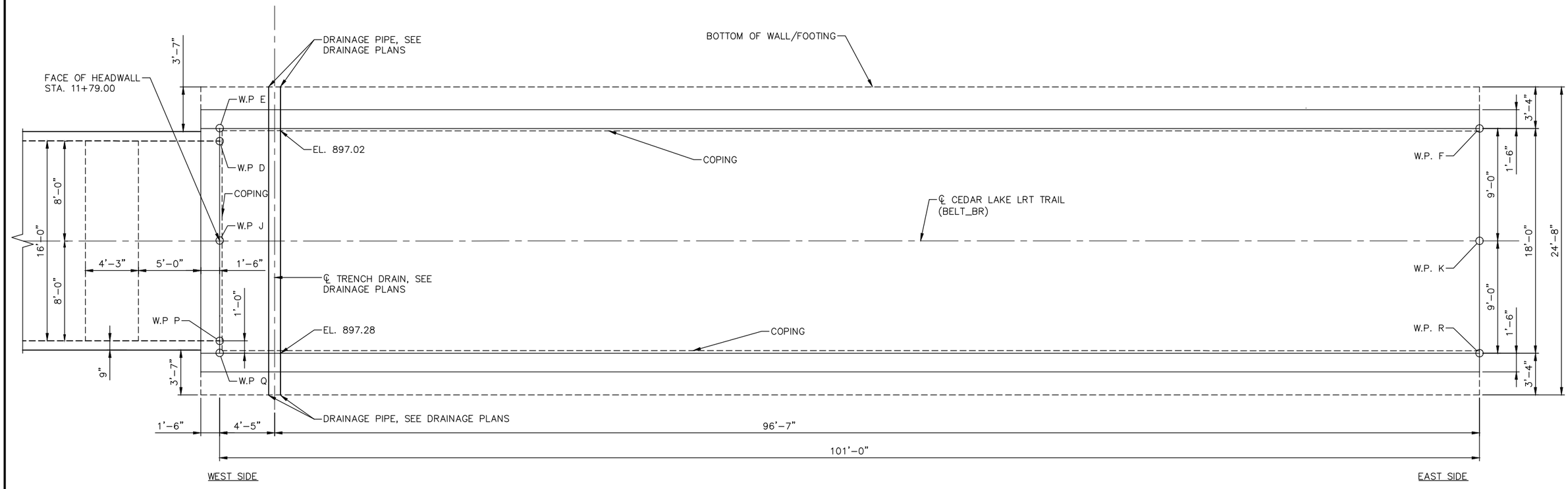

EAST APPROACH PLAN

NO.	DATE	BY	CHECK	DESIGN	REVISION / SUBMITTAL

DESIGNED BY: SMY | CHECKED BY: MTC
DRAWN BY: EBM | CHECKED BY: LKZ

AECOM Kimley»Horn

90% SUBMISSION - 01/22/16

METROPOLITAN COUNCIL

SOUTHWEST Green Line LRT Extension

CIVIL - VOLUME 4D
BLAKE RD PEDESTRIAN UNDERPASS
BRIDGE 27J60
EAST APPROACH DETAILS 1

DISCIPLINE: STRUCTURES
SHEET NAME: CBR27J60-TRN-006

SHEET 18 OF 37

Jan, 13 2016 04:53 pm V:\3400_ADC\CAD\SEGMENT E1\PLAN SHEETS\STRUCTURES\27J60\CBR27J60-TRN-006.dwg By: Edgar.McKoy

NOTES:

(1) FOR AESTHETIC DETAILS REQUIREMENTS REFER TO SHEET 11

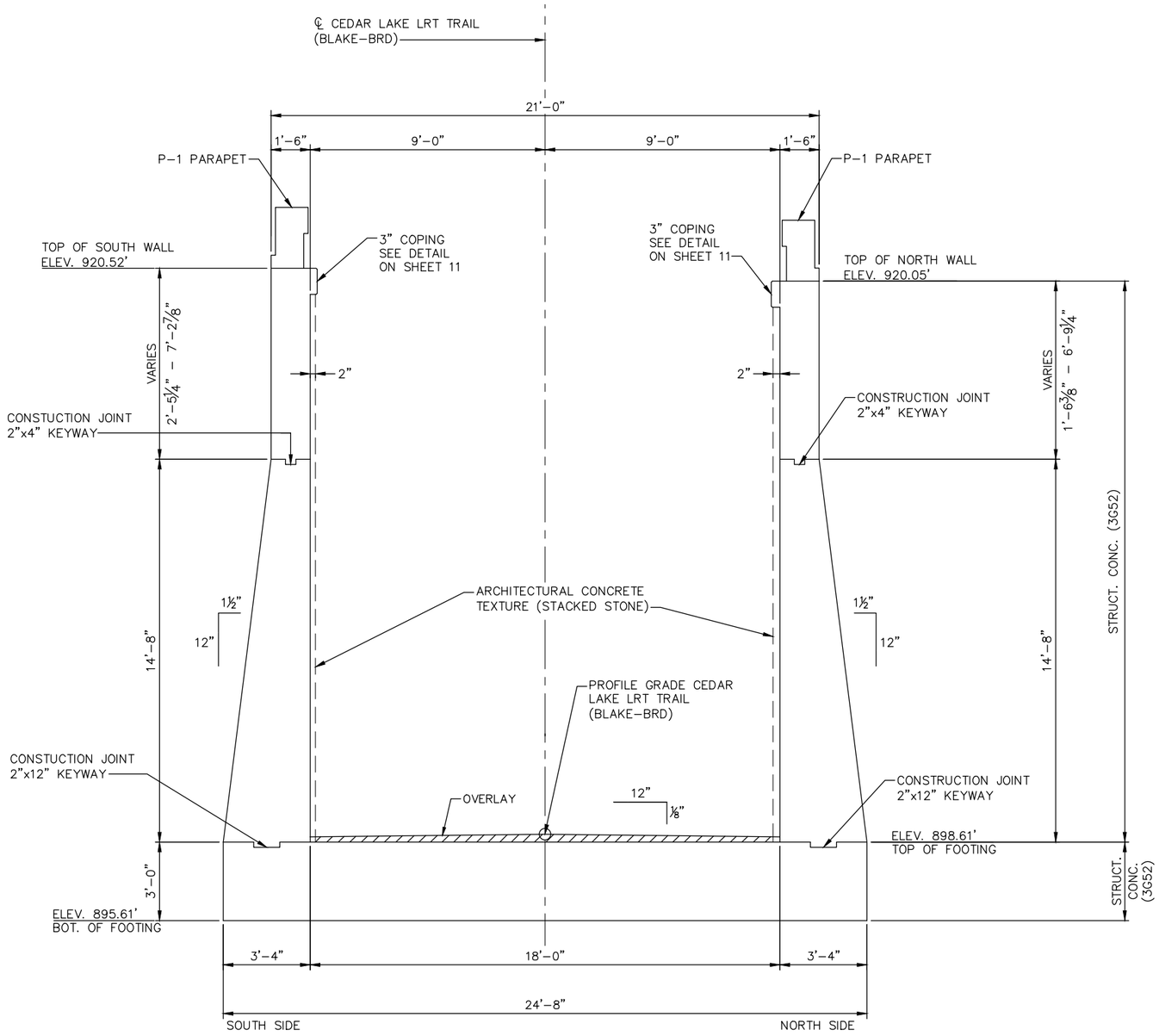

EAST END SECTION

STATION 11+79.00

NO.	DATE	BY	CHECK	DESIGN	REVISION / SUBMITTAL

DESIGNED BY: SMY | CHECKED BY: MTC

DRAWN BY: EBM | CHECKED BY:

AECOM Kimley»Horn

90% SUBMISSION - 01/22/16

METROPOLITAN COUNCIL

SOUTHWEST Green Line LRT Extension

CIVIL - VOLUME 4D
BLAKE RD PEDESTRIAN UNDERPASS
BRIDGE 27J60
EAST APPROACH DETAILS 2

DISCIPLINE: STRUCTURES

SHEET NAME: CBR27J60-TRN-007

SHEET 19 OF 37

Jan, 13 2016 04:53 pm V:\3400_ADC\CAD\SEGMENT E1\PLAN SHEETS\STRUCTURES\27J60\CBR27J60-TRN-007.dwg By: Edgar.McKoy

NOTES:

1. SEE SHEET 27 FOR P-1 PARAPET DETAILS.
2. VERTICAL CURVE STATIONS AND ELEVATIONS ARE ALONG THE CEDAR LAKE LRT TRAIL ALIGNMENT.

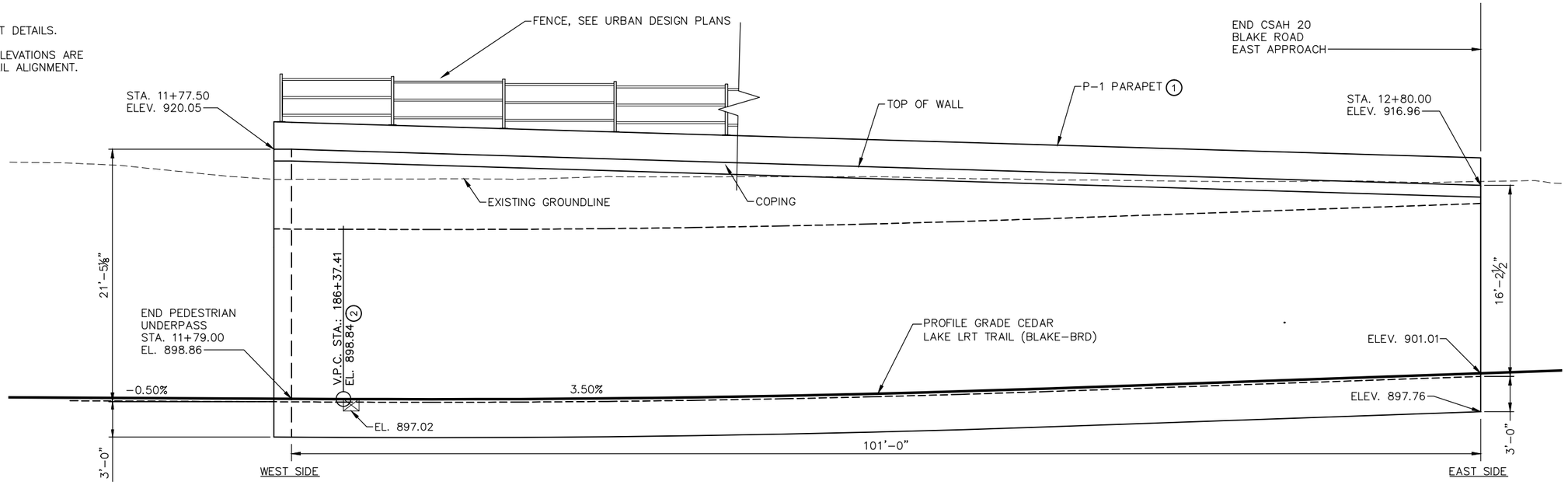

EAST APPROACH N.E. WALL ELEVATION

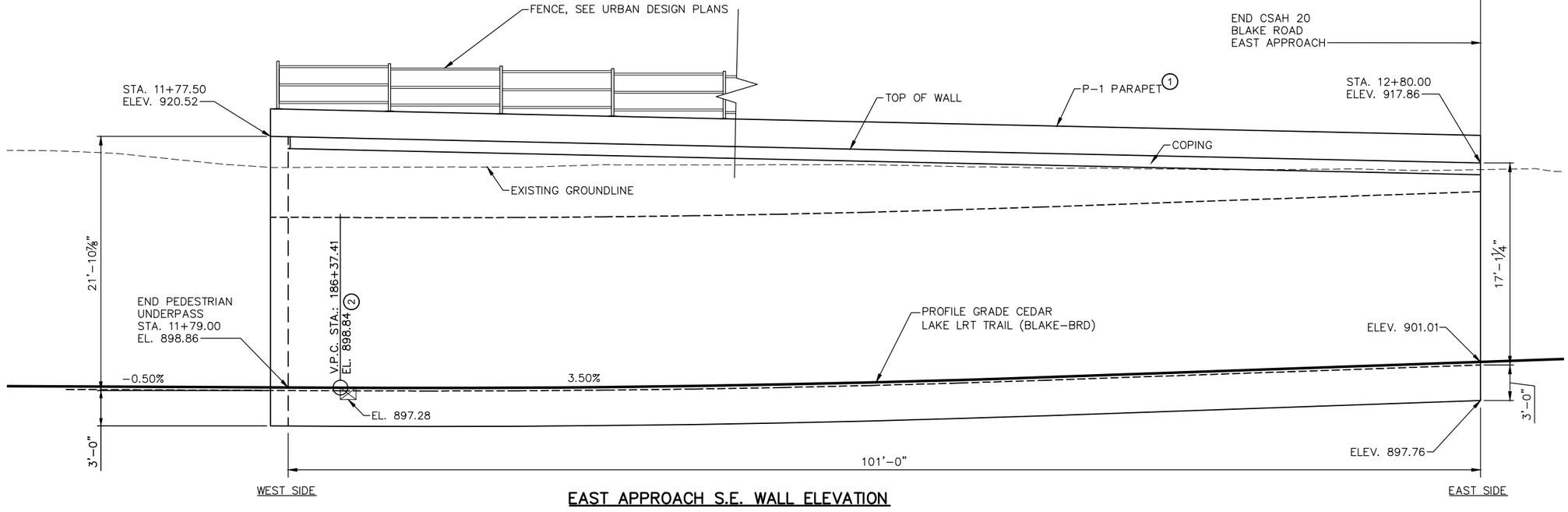

EAST APPROACH S.E. WALL ELEVATION

NO.	DATE	BY	CHECK	DESIGN	REVISION / SUBMITTAL

DESIGNED BY: SMY | CHECKED BY: MTC
DRAWN BY: EBM | CHECKED BY: LKZ

AECOM Kimley»Horn

90% SUBMISSION - 01/22/16

METROPOLITAN COUNCIL

SOUTHWEST Green Line LRT Extension

CIVIL - VOLUME 4D
BLAKE RD PEDESTRIAN UNDERPASS
BRIDGE 27J60
EAST APPROACH WALL DETAILS

DISCIPLINE: STRUCTURES
SHEET NAME: CBR27J60-DTL-011

SHEET 20 OF 37

Jan, 13 2016 04:56 pm V:\3400_ADC\CAD\SEGMENT E1\PLAN SHEETS\STRUCTURES\27J60\CBR27J60-DTL-011.dwg By: Edgar.McKoy

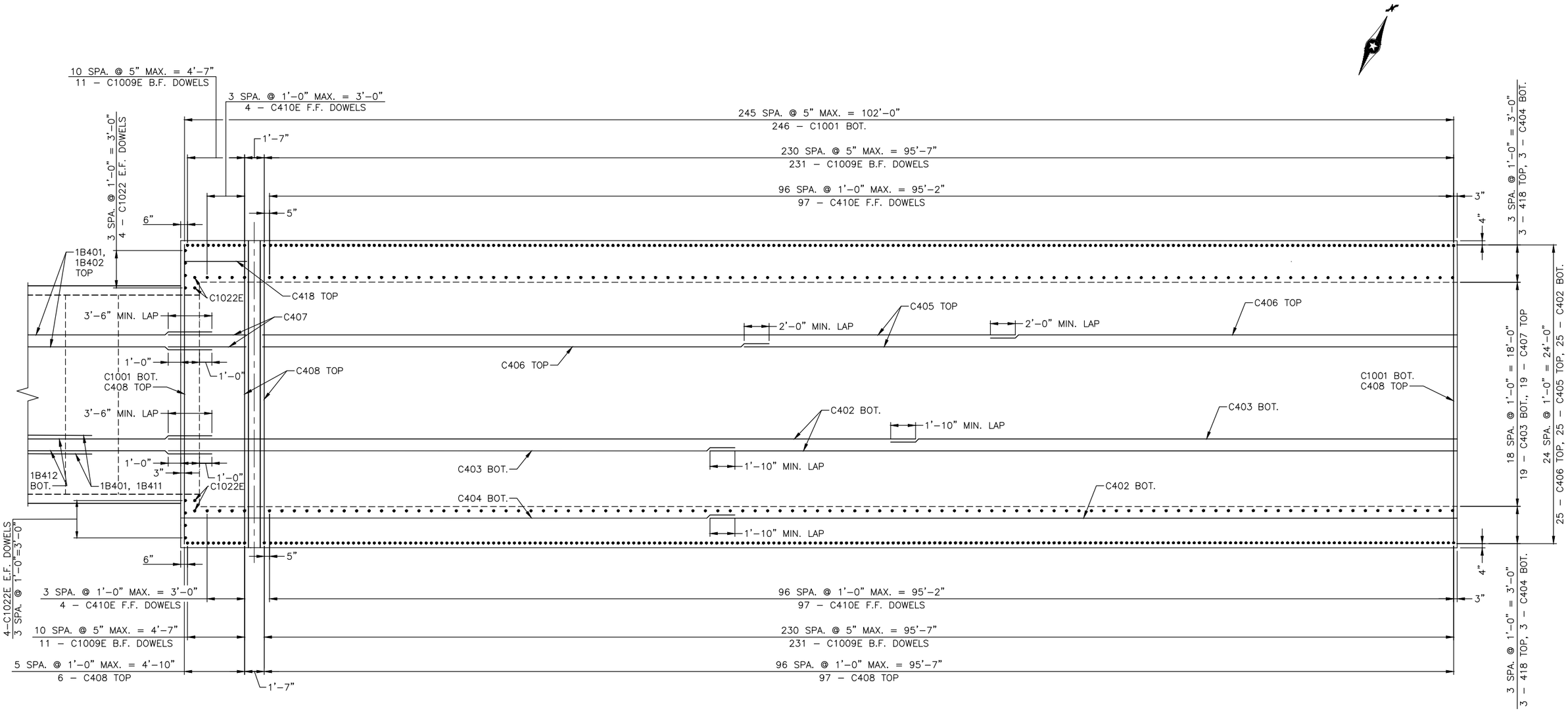

EAST APPROACH REINFORCEMENT

NO.	DATE	BY	CHECK	DESIGN	REVISION / SUBMITTAL

DESIGNED BY: SMY | CHECKED BY: MTC
DRAWN BY: EBM | CHECKED BY: LKZ

AECOM Kimley»Horn

90% SUBMISSION - 01/22/16

METROPOLITAN COUNCIL

SOUTHWEST Green Line LRT Extension

CIVIL - VOLUME 4D
BLAKE RD PEDESTRIAN UNDERPASS
BRIDGE 27J60
EAST APPROACH REINFORCEMENT 1

DISCIPLINE: STRUCTURES
SHEET NAME: CBR27J60-DTL-012

SHEET 21 OF 37

Jan, 13 2016 04:57 pm V:\3400_ADC\CAD\SEGMENT E1\PLAN SHEETS\STRUCTURES\27J60\CBR27J60-DTL-012.dwg By: Edgar.McKoy

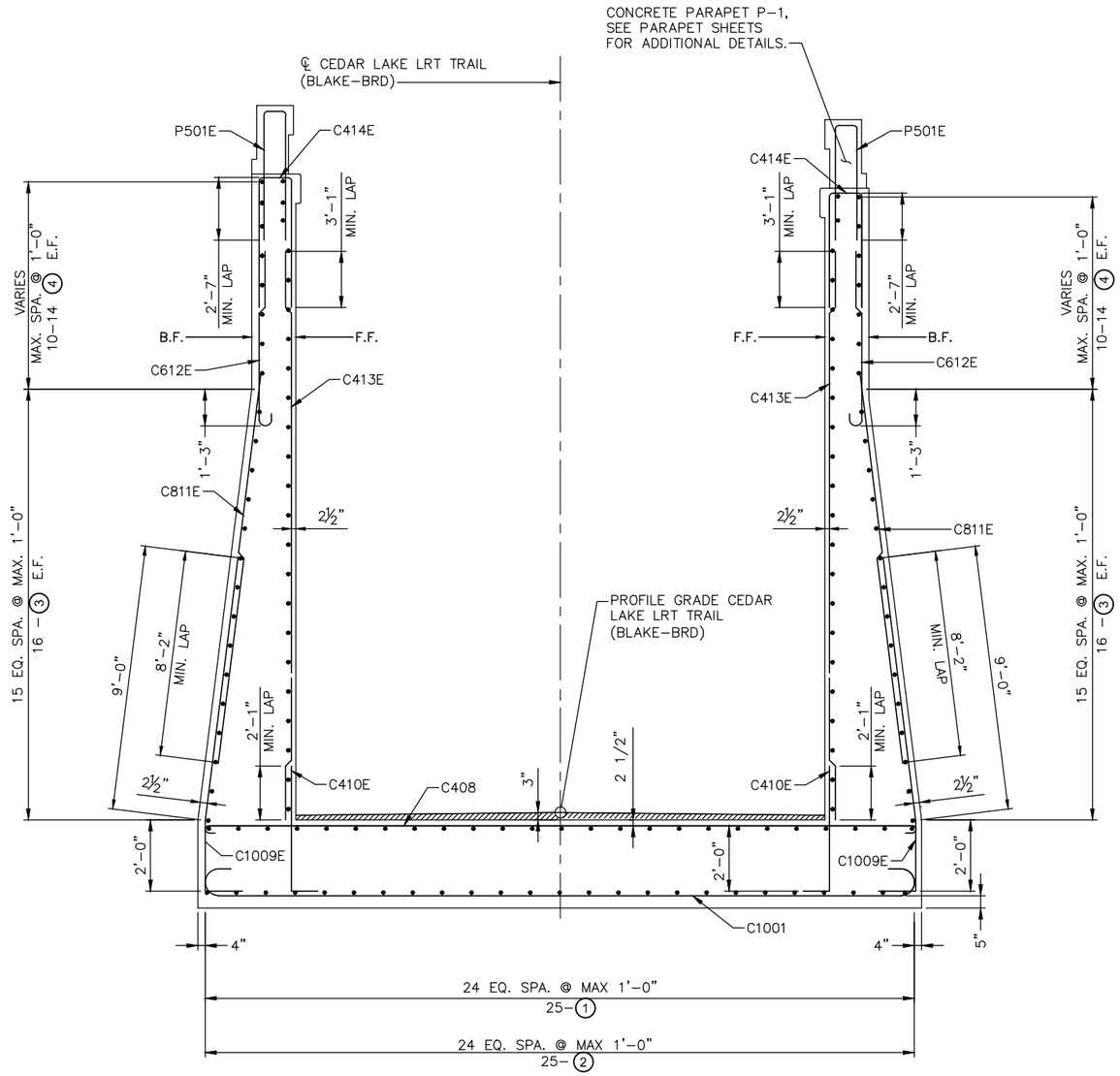

EAST APPROACH REINFORCEMENT

NOTES:

1. (1) TOP OF FOOTING LONGITUDINAL C405, C406, C407
2. (2) BOTTOM OF FOOTING LONGITUDINAL C402, C403
3. (3) WALL – LONGITUDINAL C416E, C417E
4. (4) WALL – LONGITUDINAL C419E, C420E

F.F. DENOTES FRONT FACE

B.F. DENOTES BACK FACE

E.F. DENOTES EACH FACE

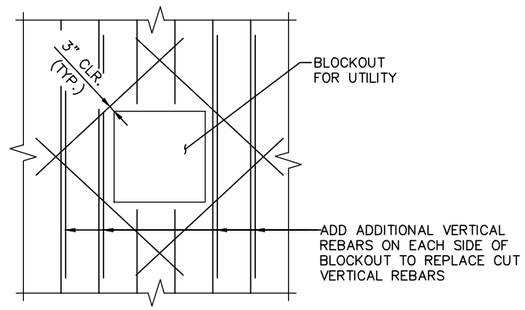

UTILITY BLOCKOUT DETAIL

NO.	DATE	BY	CHECK	DESIGN	REVISION / SUBMITTAL

DESIGNED BY: SMY | CHECKED BY: MTC
DRAWN BY: EBM | CHECKED BY:

AECOM Kimley»Horn

90% SUBMISSION - 01/22/16

METROPOLITAN COUNCIL

SOUTHWEST Green Line LRT Extension

CIVIL - VOLUME 4D
BLAKE RD PEDESTRIAN UNDERPASS
BRIDGE 27J60
EAST APPROACH REINFORCEMENT 2

DISCIPLINE: STRUCTURES
SHEET NAME: CBR27J60-DTL-013

SHEET 22 OF 37

Jan, 13 2016 04:58 pm V:\3400_ADC\CAD\SEGMENT E1\PLAN SHEETS\STRUCTURES\27J60\CBR27J60-DTL-013.dwg By: Edgar.McKoy

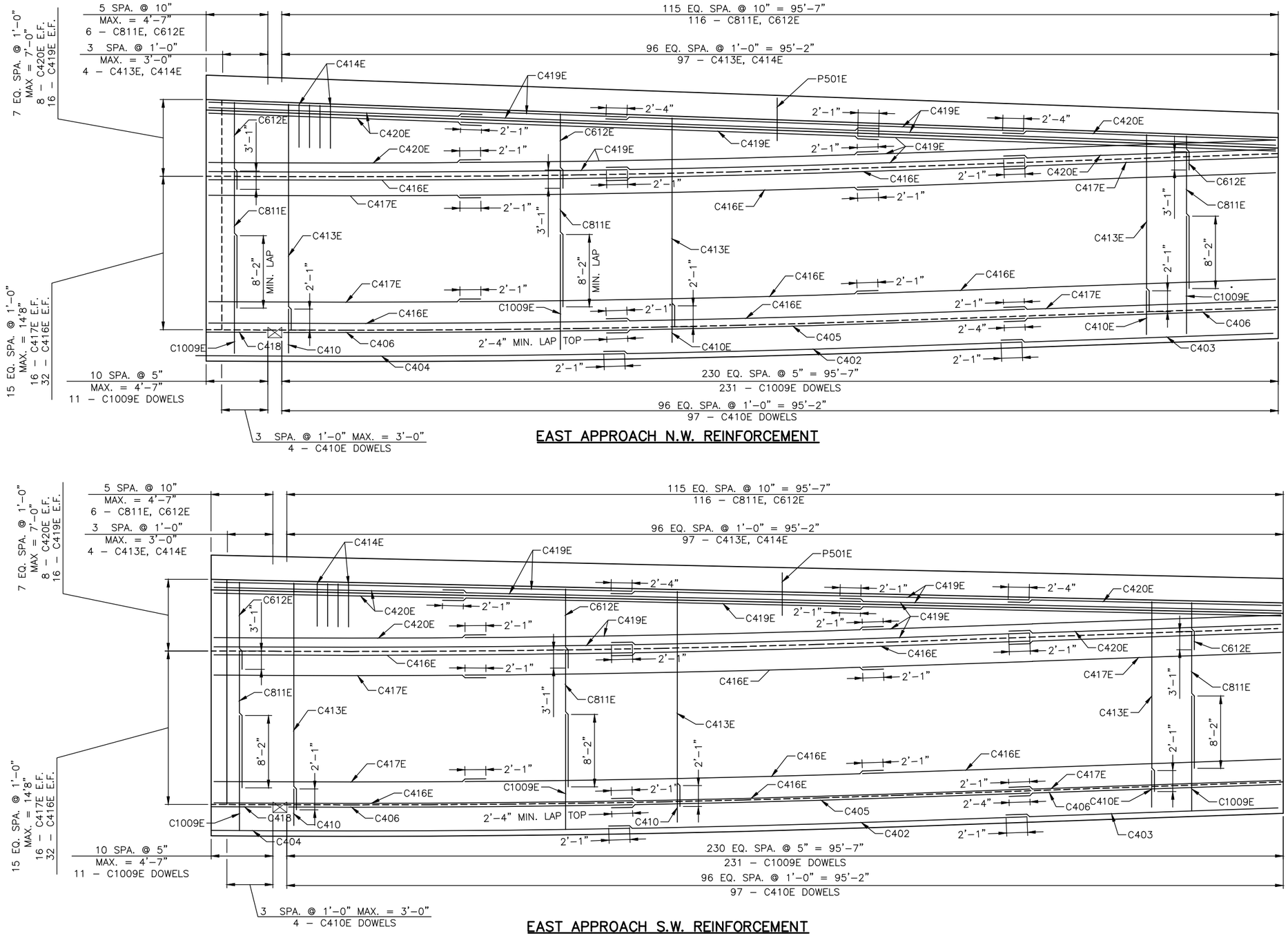

EAST APPROACH N.W. REINFORCEMENT

EAST APPROACH S.W. REINFORCEMENT

NO.	DATE	BY	CHECK	DESIGN	REVISION / SUBMITTAL

DESIGNED BY: SMY | CHECKED BY: MTC
DRAWN BY: EBM | CHECKED BY: LKZ

AECOM Kimley»Horn

90% SUBMISSION - 01/22/16

METROPOLITAN COUNCIL

SOUTHWEST Green Line LRT Extension

CIVIL - VOLUME 4D
BLAKE RD PEDESTRIAN UNDERPASS
BRIDGE 27J60
EAST APPROACH WALL REINFORCEMENT

DISCIPLINE: STRUCTURES

SHEET NAME: CBR27J60-DTL-014

SHEET 23 OF 37

Jan, 13 2016 04:59 pm V:\3400_ADC\CAD\SEGMENT E1\PLAN SHEETS\STRUCTURES\27J60\CBR27J60-DTL-014.dwg By: Edgar.McKoy

BILL OF REINFORCEMENT FOR WEST APPROACH				
BAR	NO.	LENGTH	SHAPE	LOCATION
A1001	180	37'-6"	BENT	FOOTING - TRANSVERSE
A402	36	60'-0"	STR.	FOOTING - LONGITUDINAL
A403	36	60'-0"	STR.	FOOTING - LONGITUDINAL
A404	75	35'-8"	BENT	FOOTING - TRANSVERSE
A1005E	355	13'-3"	BENT	DOWEL
A406E	149	5'-2"	BENT	DOWEL
A507E	108	5'-10"	BENT	DOWEL
A408E	148	19'-8"	STR.	WALL - VERTICAL F.F.
A809E	180	15'-0"	STR.	WALL - VERTICAL B.F.
A610E	180	8'-11"	BENT	WALL - VERTICAL B.F.
A411E	148	12'-5"	BENT	WALL - VERTICAL
A412E	64	40'-0"	STR.	WALL - HORIZONTAL E.F.
A413E	48	40'-0"	STR.	WALL - HORIZONTAL E.F.
A414E	48	36'-9"	STR.	WALL - HORIZONTAL E.F.
A415E	36	15'-3"	STR.	FOOTING - LONGITUDINAL
A416E	36	8'-4"	STR.	FOOTING - LONGITUDINAL
A417E	64	17'-3"	STR.	WALL - HORIZONTAL E.F.
A418E	6	2'-11"	BENT	DOWEL (STAIRS)
A419E	6	4'-4"	BENT	DOWEL (STAIRS)
A420E	2	23'-6"	BENT	INTERIOR WALL - TOP
A421E	18	7'-3"	STR.	FOOTING - LONGITUDINAL
A422E	18	8'-6"	STR.	FOOTING - LONGITUDINAL
A423E	4	7'-10"	BENT	INTERIOR WALL - VERTICAL
A424E	1 SERIES OF 9	5'-11" TO 13'-11"	BENT	INTERIOR WALL - VERTICAL
A425E	14	16'-0"	STR.	INTERIOR WALL - VERTICAL E.F.
A426E	2 SERIES OF 13	7'-0" TO 13'-0"	STR.	INTERIOR WALL - VERTICAL E.F.
A427E	14	13'-11"	STR.	INTERIOR WALL - VERTICAL E.F.
A428E	2 SERIES OF 13	14'-3" TO 20'-1"	STR.	INTERIOR WALL - VERTICAL E.F.
A429E	4	20'-9"	STR.	INTERIOR WALL - VERTICAL E.F.
A430E	35	6'-9"	BENT	INTERIOR WALL - VERTICAL
A431E	2	24'-8"	BENT	INTERIOR WALL - TOP
A432E	2	18'-2"	BENT	INTERIOR WALL - TOP
A433E	2 SERIES OF 8	3'-7" TO 16'-4"	STR.	INTERIOR WALL - HORIZONTAL
A434E	16	40'-0"	STR.	INTERIOR WALL - HORIZONTAL E.F.
A435E	2 SERIES OF 7	21'-3" TO 33'-8"	STR.	INTERIOR WALL - HORIZONTAL E.F.
A436E	2 SERIES OF 6	3'-1" TO 13'-5"	STR.	INTERIOR WALL - HORIZONTAL E.F.
A437E	42	3'-11"	BENT	INTERIOR WALL TO HEADWALL E.F.
A838E	32	20'-5"	STR.	HEADWALL - VERTICAL E.F.
A639E	32	7'-9"	STR.	HEADWALL - VERTICAL E.F.
A440E	2 SERIES OF 12	12'-3" TO 14'-6"	STR.	HEADWALL - HORIZONTAL

BILL OF REINFORCEMENT FOR WEST APPROACH CONT.				
BAR	NO.	LENGTH	SHAPE	LOCATION
A1041E	33	12'-5"	BENT	HEADWALL - DOWEL E.F.
A1042E	2	10'-11"	BENT	HEADWALL - DOWEL B.F.
A443E	20	34'-8"	BENT	HEADWALL - HORIZONTAL B.F.
A444E	1 SERIES OF 12	1'-10" TO 3'-9"	STR.	HEADWALL - HORIZONTAL B.F.
A445E	6	16'-10"	BENT	STAIRS
A446E	6	11'-0"	BENT	STAIRS
A447E	12	20'-8"	BENT	STAIRS
A448E	6	18'-6"	BENT	STAIRS
A449E	98	4'-3"	BENT	STAIRS
A450E	49	5'-0"	STR.	STAIRS
~~A451E~~	~~2~~	~~7'-4"~~	~~BENT~~	~~INTERIOR WALL - DRAIN~~
A352E	4	4'-6"	STR.	HEADWALL - CHAMFER

NOTES:

1. P501E IS EQUIVALENT TO "BAR Q" ON SHEET 27.
2. P502E IS EQUIVALENT TO THE MODIFIED "BAR Q" ON SHEET 28.

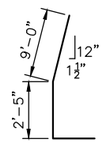

A1005E

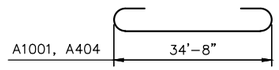

A1001, A404

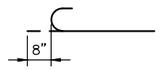

A610E

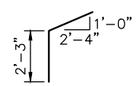

A419E

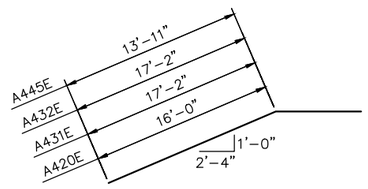

A445E, A432E, A431E, A420E

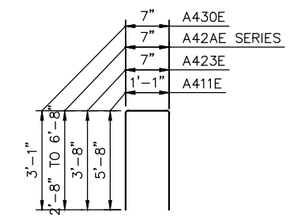

A430E, A424E SERIES, A423E, A411E

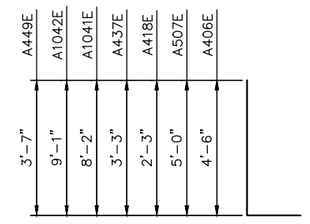

A449E, A1042E, A1041E, A437E, A418E, A507E, A406E

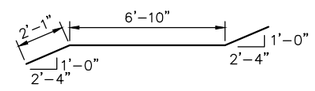

A446E

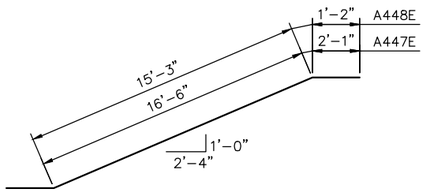

A447E, A448E

NO.	DATE	BY	CHECK	DESIGN	REVISION / SUBMITTAL

DESIGNED BY: SMY | CHECKED BY: MTC
DRAWN BY: AMC | CHECKED BY: LKZ

AECOM Kimley»Horn

90% SUBMISSION - 01/22/16

METROPOLITAN COUNCIL

SOUTHWEST Green Line LRT Extension

CIVIL - VOLUME 4D
BLAKE RD PEDESTRIAN UNDERPASS
BRIDGE 27J60
REINFORCEMENT BAR LIST 1

DISCIPLINE: STRUCTURES
SHEET NAME: CBR27J60-TRN-008

SHEET 24 OF 37

Jan, 13 2016 05:00 pm v:\3400_ADC\CAD\SEGMENT E1\PLAN SHEETS\STRUCTURES\27J60\CBR27J60-TRN-008.dwg By: Edgar.McKoy

BILL OF REINFORCEMENT FOR BARREL - STAGE 1

BAR	NO.	LENGTH	SHAPE	LOCATION
1B401	126	40'-0"	STR.	LONGITUDINAL TOP/BOTTOM SLAB
1B402	24	35'-9"	STR.	LONGITUDINAL TOP SLAB
1B403	66	35'-2"	STR.	LONGITUDINAL TOP SLAB
1B804E	26	7'-8"	BENT	BARREL - HEADWALL CONNECTION
1B505	144	17'-2"	STR.	TRANSVERSE TOP/BOTTOM SLAB
1B907	286	17'-2"	STR.	TRANSVERSE TOP/BOTTOM SLAB
1B308	144	4'-5"	BENT	CHAMFER
1B809E	26	8'-4"	BENT	BARREL - HEADWALL CONNECTION
1B410	18	38'-5"	STR.	LONGITUDINAL BOTTOM SLAB
1B411	18	26'-2"	STR.	LONGITUDINAL BOTTOM SLAB
1B412E	18	13'-8"	BENT	LONGITUDINAL BOTTOM SLAB
1B913	144	8'-7"	BENT	WALL DOWEL
1B914	144	19'-11"	BENT	WALL VERTICAL B.F.
1B515	286	4'-0"	BENT	WALL DOWEL
1B516	286	18'-7"	BENT	WALL VERTICAL F.F.

BILL OF REINFORCEMENT FOR BARREL - STAGE 2

BAR	NO.	LENGTH	SHAPE	LOCATION
2B401	126	40'-0"	STR.	LONGITUDINAL TOP/BOTTOM SLAB
2B402	24	21'-1"	STR.	LONGITUDINAL TOP SLAB
2B403	66	20'-10"	STR.	LONGITUDINAL TOP SLAB
2B804E	26	7'-8"	BENT	BARREL - HEADWALL CONNECTION
2B505	120	5'-0"	STR.	TRANSVERSE TOP/BOTTOM SLAB
2B907	238	17'-2"	STR.	TRANSVERSE TOP/BOTTOM SLAB
2B308	120	4'-5"	BENT	CHAMFER
2B809E	26	8'-4"	BENT	BARREL - HEADWALL CONNECTION
2B410	18	23'-10"	STR.	LONGITUDINAL BOTTOM SLAB
2B411	18	11'-11"	STR.	LONGITUDINAL BOTTOM SLAB
2B412E	18	13'-8"	BENT	LONGITUDINAL BOTTOM SLAB
2B913	120	8'-7"	BENT	WALL DOWEL
2B914	120	19'-11"	BENT	WALL VERTICAL B.F.
2B515	238	4'-0"	BENT	WALL DOWEL
2B516	238	18'-7"	BENT	WALL VERTICAL F.F.

BILL OF REINFORCEMENT FOR EAST APPROACH

BAR	NO.	LENGTH	SHAPE	LOCATION
C1001	246	27'-0"	BENT	FOOTING - TRANSVERSE
C402	25	60'-0"	STR.	FOOTING - LONGITUDINAL
C403	19	45'-1"	STR.	FOOTING - LONGITUDINAL
C404	6	40'-0"	STR.	FOOTING - LONGITUDINAL
C405	25	60'-0"	STR.	FOOTING - LONGITUDINAL
C406	25	42'-4"	STR.	FOOTING - LONGITUDINAL
C407	19	6'-9"	STR.	FOOTING - LONGITUDINAL
C408	103	25'-2"	BENT	FOOTING - TRANSVERSE
C1009E	484	13'-3"	BENT	DOWEL
C410E	202	5'-2"	BENT	DOWEL
C811E	244	15'-0"	STR.	WALL - VERTICAL B.F.
C612E	244	6'-8"	STR	WALL - VERTICAL B.F.
C413E	202	20'-4"	STR.	WALL - VERTICAL F.F.
C414E	202	12'-5"	BENT	WALL - VERTICAL
C416E	64	40'-0"	STR.	WALL - HORIZONTAL
C417E	32	26'-1"	STR.	WALL - HORIZONTAL
C418E	6	5'-0"	STR.	FOOTING - LONGITUDINAL
C419E	32	40'-0"	STR.	WALL - HORIZONTAL
C420E	16	27'-5"	STR.	WALL - HORIZONTAL
C821E	2	12'-6"	STR	HEADWALL - VERTICAL B.F.
C1022E	2 SERIES OF 7	10'-1" TO 12'-6"	BENT	HEADWALL DOWELS
C423E	18	20'-6"	STR.	HEADWALL - HORIZONTAL E.F.
C424E	2 SERIES OF 12	2'-5" TO 4'-1"	STR.	HEADWALL - HORIZONTAL B.F.
C625E	32	8'-7"	STR.	HEADWALL - VERTICAL E.F.
C826E	8	20'-5"	STR.	HEADWALL - VERTICAL B.F.
C327E	4	4'-6"	STR	HEADWALL - CHAMFER

NOTES:

1. P501E IS EQUIVALENT TO "BAR Q" ON SHEET 27.
2. P502E IS EQUIVALENT TO THE MODIFIED "BAR Q" ON SHEET 28.

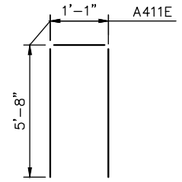

C414E

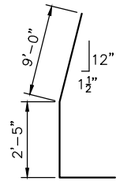

C1009E

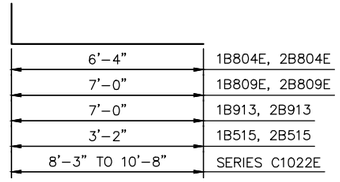

1B804E, 2B804E, 1B809E, 2B809E, 1B913, 2B913, 1B515, 2B515, C1022E

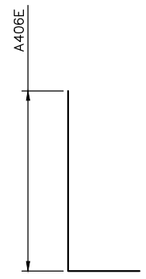

C410E

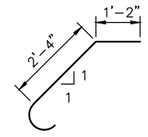

1B308, 2B308

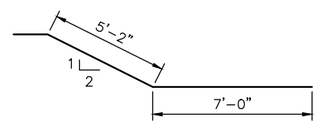

1B412, 2B412

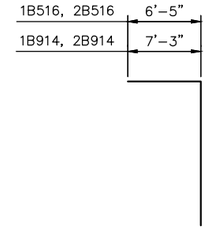

1B516, 2B516, 1B914, 2B914

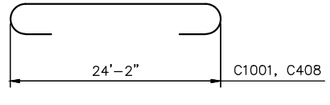

C1001, C408

NO.	DATE	BY	CHECK	DESIGN	REVISION / SUBMITTAL

DESIGNED BY: SMY | CHECKED BY: MTC
DRAWN BY: EBM | CHECKED BY: LKZ

AECOM Kimley»Horn

90% SUBMISSION - 01/22/16

METROPOLITAN COUNCIL

SOUTHWEST Green Line LRT Extension

CIVIL - VOLUME 4D
BLAKE RD PEDESTRIAN UNDERPASS
BRIDGE 27J60
REINFORCEMENT BAR LIST 2

DISCIPLINE: STRUCTURES
SHEET NAME: CBR27J60-TRN-009

SHEET 25 OF 37

Jan, 13 2016 05:01 pm V:\3400_ADC\CAD\SEGMENT E1\PLAN SHEETS\STRUCTURES\27J60\CBR27J60-TRN-009.dwg By: Edgar.McKoy

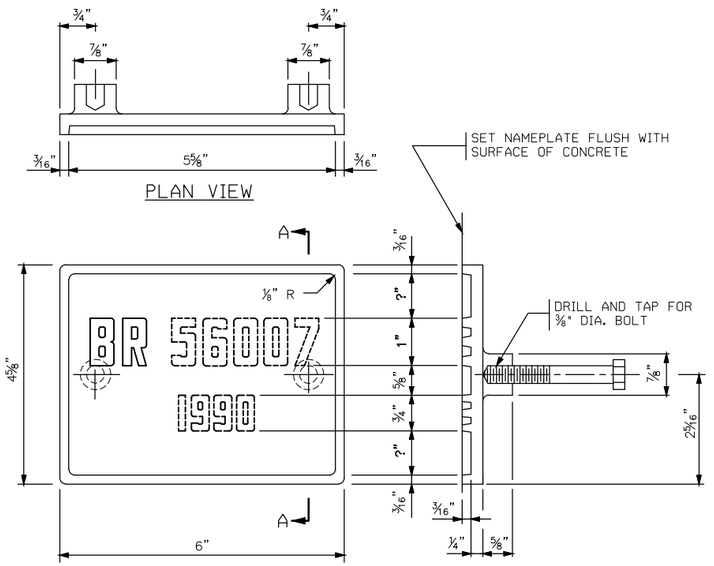

THE DASHED NUMBERS SHOWN ABOVE ARE FOR ILLUSTRATION.
DATA TO BE SHOWN ON NAMEPLATE IS AS FOLLOWS:

BRIDGE 27J61

YEAR (1)



NUMBERS FOR NAMEPLATE

NOTES:

MATERIAL SHALL COMPLY WITH SPEC. 3327.

LETTERS AND NUMBERS SHALL CONFORM TO THOSE SHOWN.

DRAFT ON LETTERS AND NUMBERS SHALL NOT BE MORE THAN 3" IN 12".

HORIZONTAL SPACING OF LETTERS AND NUMBERS SHALL PRODUCE A BALANCED LAYOUT IN PROPORTION TO SPACING SHOWN.

TOP SURFACE OF LETTERS, NUMBERS AND FRAMES SHALL BE BURNISHED.

FURNISH 2 STEEL BOLTS ⅜" DIA. x 3" LONG WITH EACH PLATE.

ALL DIMENSIONS FOR ¾" HIGH LETTERS AND NUMBERS SHALL BE IN DIRECT PROPORTION TO THOSE SHOWN FOR THE 1" HIGH LETTERS AND NUMBERS.

(1) YEAR OF CONSTRUCTION

APPROVED: NOVEMBER 22, 2002	STATE OF MINNESOTA DEPARTMENT OF TRANSPORTATION	REVISION 09-11-2014	DETAIL NO.
Daniel D. Wagner STATE BRIDGE ENGINEER	BRIDGE NAMEPLATE (FOR NEW BRIDGES)		B101

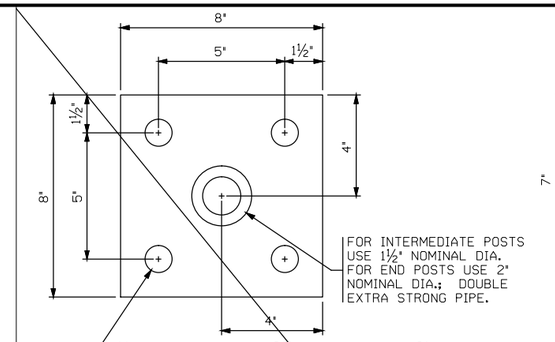

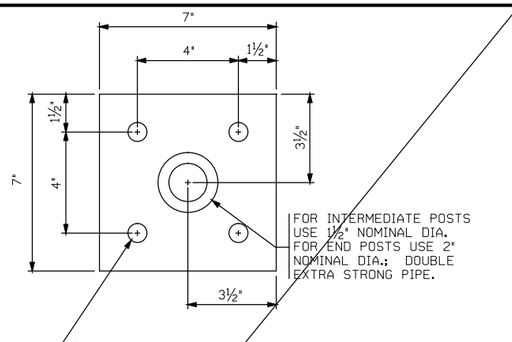

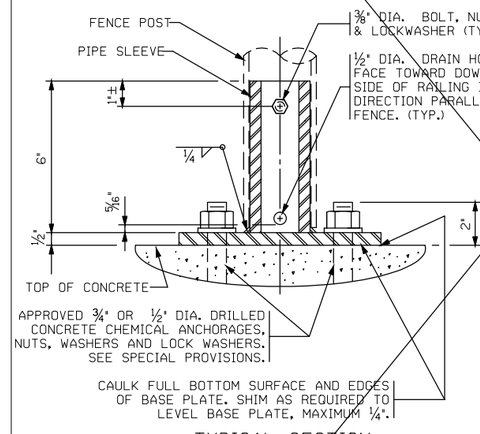

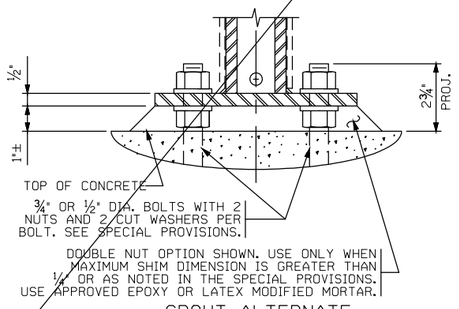

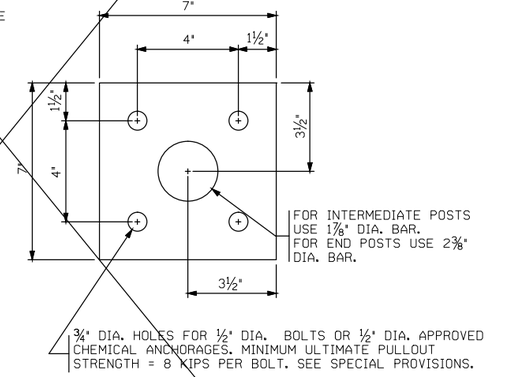

NOTES:

STRUCTURAL STEEL PER Mn/DOT SPEC. 3306

STRUCTURAL PIPE PER Mn/DOT SPEC. 3362

GALVANIZE THE FENCE POST ANCHORAGE AFTER FABRICATION PER Mn/DOT SPEC. 3394. GALVANIZE THE FASTENERS PER Mn/DOT SPEC. 3392.

DOUBLE EXTRA STRONG PIPE WEIGHTS:
1½" NOMINAL DIA. = 6.41 LBS./FT.
2" NOMINAL DIA. = 9.03 LBS./FT.

APPROVED: NOVEMBER 22, 2002	STATE OF MINNESOTA DEPARTMENT OF TRANSPORTATION	REVISION	DETAIL NO.
Daniel D. Wagner STATE BRIDGE ENGINEER	FENCE POST ANCHORAGE		B905

NO.	DATE	BY	CHECK	DESIGN	REVISION / SUBMITTAL

DESIGNED BY: - CHECKED BY: MTC
DRAWN BY: - CHECKED BY:

AECOM Kimley»Horn

90% SUBMISSION - 01/22/16

METROPOLITAN COUNCIL

SOUTHWEST Green Line LRT Extension

CIVIL - VOLUME 4D
BLAKE RD PEDESTRIAN UNDERPASS
BRIDGE 27J60
BRIDGE DETAILS

DISCIPLINE: STRUCTURES

SHEET NAME: CBR27J60-DTL-015

SHEET 26 OF 37

Jan, 13 2016 05:02 pm V:\3400_ADC\CAD\SEGMENT E1\PLAN SHEETS\STRUCTURES\27J60\CBR27J60-DTL-015.dwg By: Edgar.McKoy

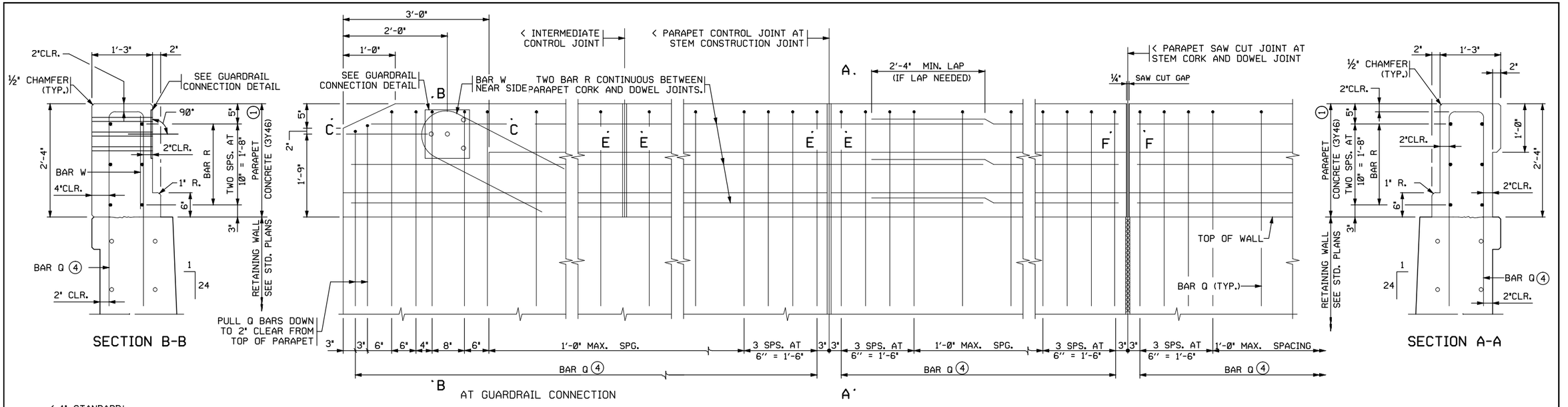

INSIDE ELEVATION OF PARAPET

PARAPET MEETS TEST LEVEL 2 REQUIREMENTS OF NCHRP REPORT 350
WHEN THE PARAPET WILL BE USED NEXT TO A WALKWAY, A TEST LEVEL 4 BARRIER MUST BE USED TO SEPARATE TRAFFIC FROM THIS PARAPET IN THE 45 MPH (OR OVER) SPEED ZONE.

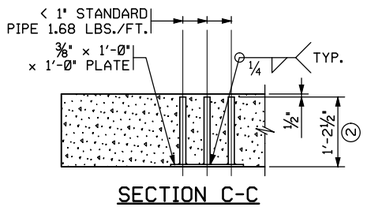

SECTION C-C

(REINFORCEMENT NOT SHOWN)

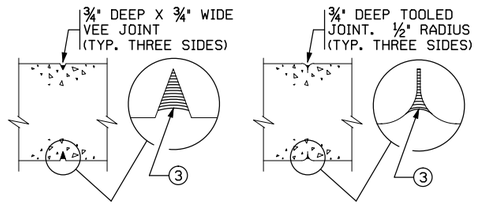

SECTION E-E

CONTRACTOR OPTION 1

SECTION E-E

CONTRACTOR OPTION 2

CONTROL JOINT DETAILS

WHEN USING SLIP FORM METHOD TO PLACE THE CONCRETE, CUT JOINT 3 INCHES DEEP USING MARGIN TROWEL OR SIMILAR MEANS IMMEDIATELY AFTER CONCRETE PLACEMENT (TYP. THREE SIDES)

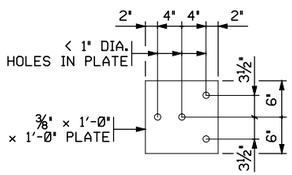

GUARDRAIL CONNECTION DETAIL

GALVANIZE AFTER FABRICATION PER SPEC. 3394. ESTIMATED WEIGHT = 23 LBS

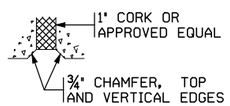

SECTION D-D

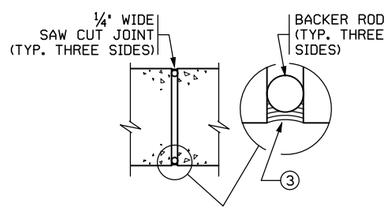

SECTION F-F

PARAPET SAW CUT JOINT

MATCH PARAPET SAW CUT JOINTS WITH RETAINING WALL STEM CORK AND DOWEL JOINTS.

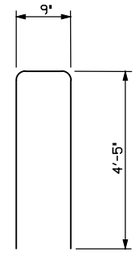

BAR Q

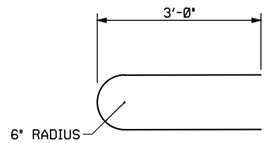

BAR W

NOTES:

MATCH PARAPET SAW CUT JOINTS WITH RETAINING WALL STEM CORK AND DOWEL JOINTS.

MATCH PARAPET CONTROL JOINTS WITH RETAINING WALL STEM CONSTRUCTION JOINTS. PLACE INTERMEDIATE PARAPET CONTROL JOINTS AT 10'-0" MAXIMUM SPACING.

REINFORCEMENT QUANTITIES WERE COMPUTED ASSUMING A SAW CUT JOINT BETWEEN EVERY PANEL. CHANGES IN THE BILL OF REINFORCEMENT ARE THE RESPONSIBILITY OF THE CONTRACTOR, AND NO ADDITIONAL PAYMENT WILL BE MADE.

BARS MARKED WITH THE SUFFIX "E" SHALL BE EPOXY COATED IN ACCORDANCE WITH SPEC. 3301.

THE GUARDRAIL CONNECTION IS INCLUDED IN THE PRICE BID FOR PARAPET CONCRETE (3Y46).

GUARDRAIL CONNECTION SHALL BE STRUCTURAL STEEL, SPEC. 3306 AND GALVANIZED AFTER FABRICATION PER SPEC. 3394. (4)

FOR TYPICAL RETAINING WALL REINFORCEMENT AND DETAILS, SEE STANDARD RETAINING WALL SHEETS.

CONCRETE PARAPET: 416 LBS/FT. (0.103 CU YD/FT.)

CONCRETE PARAPET SHALL BE PAID FOR ON A LINEAR FOOT BASIS.

(1) REBAR AND CONCRETE ARE INCLUDED IN THE PAY ITEM BY LINEAR FEET FOR THE PARAPET

(2) DIMENSION INCLUDES ⅜" PLATE.

(3) JOINT SEALANT PER MnDOT APPROVED/QUALIFIED PRODUCT LIST - CRACK AND JOINT MATERIALS - SILICONE JOINT SEALERS.

(4) BAR Q SPACING AND CLEARANCES ARE SHOWN ON THIS SHEET. BAR Q QUANTITIES ARE INCLUDED IN THE WALL PANEL TABULATIONS, EXCEPT FOR A SMALL QUANTITY OF ADDED BARS NEEDED AT A GUARDRAIL CONNECTION

BILL OF REINFORCEMENT

TYPICAL PARAPET ON RETAINING WALL
30'-6" PANEL LENGTH, PANELS:_____

BAR	MARK	NO.	LENGTH	SHAPE	LOCATION
R	R401E	6	30'-2"	——	PARAPET - HORIZONTAL

PARAPET BARRIER CONC. (3Y46): 3.2 CU YD (1)
REINFORCEMENT BARS (EPOXY): 121 POUND (1)

30'-6" PANEL LENGTH
WITH GUARDRAIL CONNECTION

BAR	MARK	NO.	LENGTH	SHAPE	LOCATION
Q	P501E	2	9'-7"	⊏⊐	PARAPET - VERTICAL
R	R401E	6	30'-2"	——	PARAPET - HORIZONTAL
W	R702E	1	6'-7"	⊂⊃	PARAPET - VERTICAL

(4)

PARAPET BARRIER CONC. (3Y46): 3.2 CU YD (1)
REINFORCEMENT BARS (EPOXY): 155 POUND (1)

TYPICAL PARAPET ON RETAINING WALL
_____ PANEL LENGTH, PANEL: _____

BAR	MARK	NO.	LENGTH	SHAPE	LOCATION
R	R401E			——	PARAPET - HORIZONTAL

PARAPET BARRIER CONC. (3Y46): -- CU YD (1)
REINFORCEMENT BARS (EPOXY): -- POUND (1)

REVISION:

APPROVED: AUGUST 27, 2014
Nancy Daubenberger
STATE BRIDGE ENGINEER

CERTIFIED BY _____ LICENSED PROFESSIONAL ENGINEER _____ DATE
NAME: _____ LIC. NO._____

STANDARD SHEET NO. 5-297.633
STANDARD APPROVED: AUGUST 27, 2014

TITLE: RETAINING WALL CONCRETE PARAPET (TYPE P-1)

STATE PROJ. NO. _____(TH ____) SHEET NO. 27_ OF _37_ SHEETS

Jan. 13 2016 05:02 pm V:\3400_ADC\CAD\SEGMENT E1\PLAN SHEETS\STRUCTURES\27J60\CBR27J60-DTL-016.dwg By: Edgar.McKoy

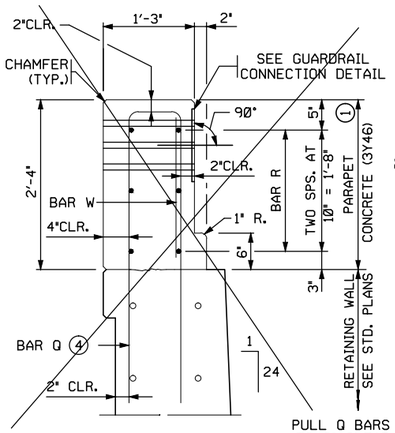

SECTION B-B

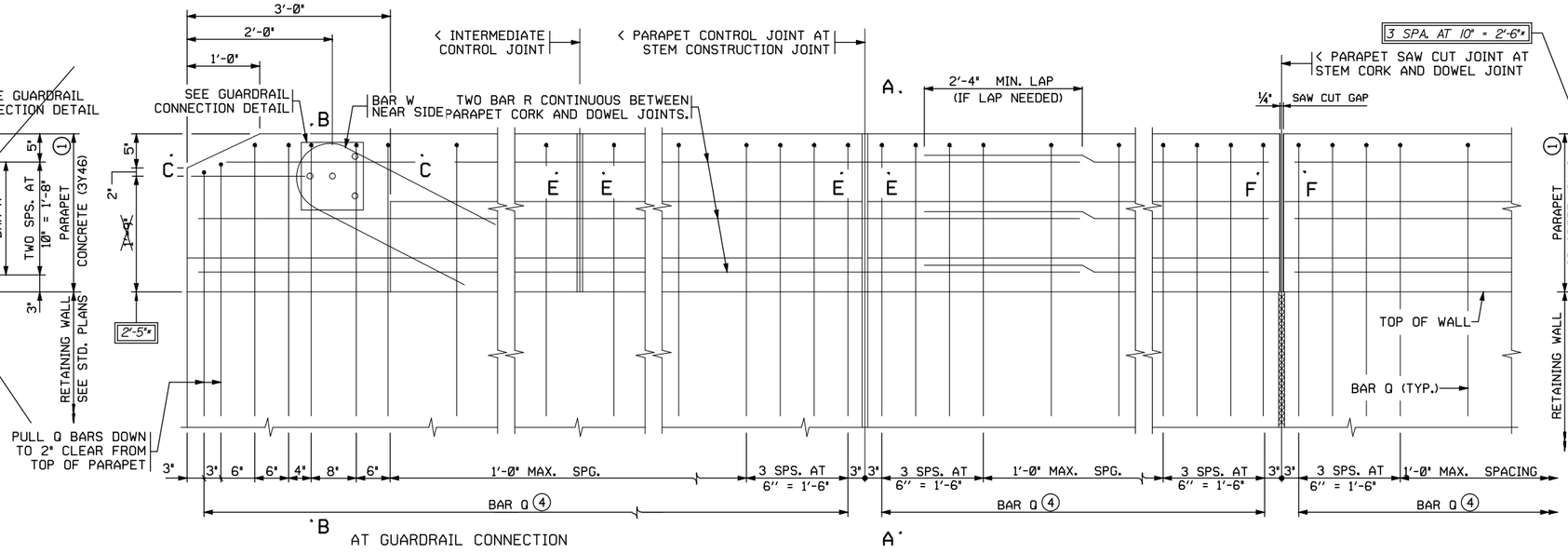

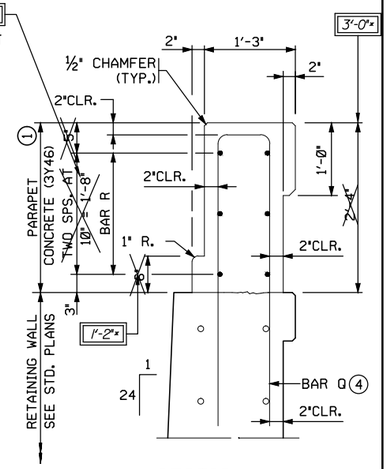

SECTION A-A

INSIDE ELEVATION OF PARAPET

PARAPET MEETS TEST LEVEL 2 REQUIREMENTS OF NCHRP REPORT 350

WHEN THE PARAPET WILL BE USED NEXT TO A WALKWAY, A TEST LEVEL 4 BARRIER MUST BE USED TO SEPARATE TRAFFIC FROM THIS PARAPET IN THE 45 MPH (OR OVER) SPEED ZONE.

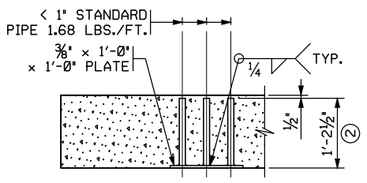

SECTION C-C

(REINFORCEMENT NOT SHOWN)

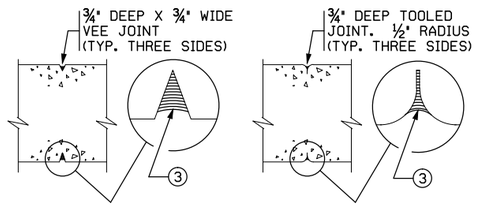

SECTION E-E

CONTRACTOR OPTION 1

SECTION E-E

CONTRACTOR OPTION 2

CONTROL JOINT DETAILS

WHEN USING SLIP FORM METHOD TO PLACE THE CONCRETE, CUT JOINT 3 INCHES DEEP USING MARGIN TROWEL OR SIMILAR MEANS IMMEDIATELY AFTER CONCRETE PLACEMENT (TYP. THREE SIDES)

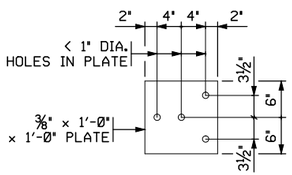

GUARDRAIL CONNECTION DETAIL

GALVANIZE AFTER FABRICATION PER SPEC. 3394. ESTIMATED WEIGHT = 23 LBS

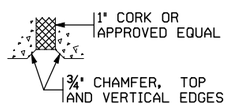

SECTION D-D

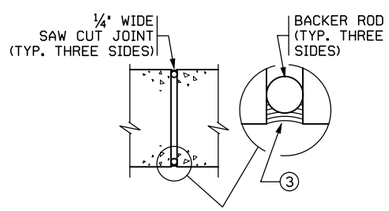

SECTION F-F

PARAPET SAW CUT JOINT

MATCH PARAPET SAW CUT JOINTS WITH RETAINING WALL STEM CORK AND DOWEL JOINTS.

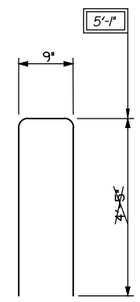

BAR Q

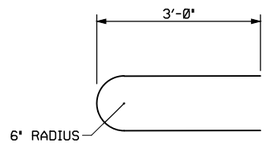

BAR W

NOTES:

MATCH PARAPET SAW CUT JOINTS WITH RETAINING WALL STEM CORK AND DOWEL JOINTS.

MATCH PARAPET CONTROL JOINTS WITH RETAINING WALL STEM CONSTRUCTION JOINTS. PLACE INTERMEDIATE PARAPET CONTROL JOINTS AT 10'-0" MAXIMUM SPACING.

REINFORCEMENT QUANTITIES WERE COMPUTED ASSUMING A SAW CUT JOINT BETWEEN EVERY PANEL. CHANGES IN THE BILL OF REINFORCEMENT ARE THE RESPONSIBILITY OF THE CONTRACTOR, AND NO ADDITIONAL PAYMENT WILL BE MADE.

BARS MARKED WITH THE SUFFIX "E" SHALL BE EPOXY COATED IN ACCORDANCE WITH SPEC. 3301.

THE GUARDRAIL CONNECTION IS INCLUDED IN THE PRICE BID FOR PARAPET CONCRETE (3Y46).

GUARDRAIL CONNECTION SHALL BE STRUCTURAL STEEL, SPEC. 3306 AND GALVANIZED AFTER FABRICATION PER SPEC. 3394.

FOR TYPICAL RETAINING WALL REINFORCEMENT AND DETAILS, SEE STANDARD RETAINING WALL SHEETS.

CONCRETE PARAPET: 416 LBS/FT. (0.103 CU YD/FT.)

CONCRETE PARAPET SHALL BE PAID FOR ON A LINEAR FOOT BASIS.

(1) REBAR AND CONCRETE ARE INCLUDED IN THE PAY ITEM BY LINEAR FEET FOR THE PARAPET

(2) DIMENSION INCLUDES ⅜" PLATE.

(3) JOINT SEALANT PER MnDOT APPROVED/QUALIFIED PRODUCT LIST - CRACK AND JOINT MATERIALS - SILICONE JOINT SEALERS.

(4) BAR Q SPACING AND CLEARANCES ARE SHOWN ON THIS SHEET. BAR Q QUANTITIES ARE INCLUDED IN THE WALL PANEL TABULATIONS, EXCEPT FOR A SMALL QUANTITY OF ADDED BARS NEEDED AT A GUARDRAIL CONNECTION

BILL OF REINFORCEMENT

TYPICAL PARAPET ON RETAINING WALL
30'-6" PANEL LENGTH, PANELS:_____

BAR	MARK	NO.	LENGTH	SHAPE	LOCATION
R	R401E	6	30'-2"	——	PARAPET - HORIZONTAL

PARAPET BARRIER CONC. (3Y46) 3.2 CU YD (1) — REINFORCEMENT BARS (EPOXY) 121 POUND (1)

30'-6" PANEL LENGTH
WITH GUARDRAIL CONNECTION

8x

BAR	MARK	NO.	LENGTH	SHAPE	LOCATION
(4) Q	~~P502E~~	2	~~3'-7"~~		PARAPET - VERTICAL
R	R401E	~~6~~	30'-2"	——	PARAPET - HORIZONTAL
W	R702E	1	6'-7"		PARAPET - VERTICAL

PARAPET BARRIER CONC. (3Y46) 3.2 CU YD (1) — REINFORCEMENT BARS (EPOXY) 155 POUND (1)

TYPICAL PARAPET ON RETAINING WALL
_____ PANEL LENGTH, PANEL: _____

BAR	MARK	NO.	LENGTH	SHAPE	LOCATION
R	R401E			——	PARAPET - HORIZONTAL

PARAPET BARRIER CONC. (3Y46) -- CU YD (1) — REINFORCEMENT BARS (EPOXY) -- POUND (1)

*DENOTES MODIFICATION FROM STANDARD PLAN

CERTIFIED BY _____ LICENSED PROFESSIONAL ENGINEER _____ DATE

NAME: _____ LIC. NO._____

REVISION:

APPROVED: ~~AUGUST 27, 2014~~
Nancy Daubenberger
STATE BRIDGE ENGINEER

MODIFIED

STANDARD SHEET NO. ~~5-297.633~~

STANDARD APPROVED: ~~AUGUST 27, 2014~~

TITLE: RETAINING WALL CONCRETE PARAPET (TYPE P-1)

STATE PROJ. NO. _____(TH ____) SHEET NO. 28_ OF _37_ SHEETS

Jan. 13 2016 05:03 pm V:\3400_ADC\CAD\SEGMENT E1\PLAN SHEETS\STRUCTURES\27J60\CBR27J60-DTL-017.dwg By: Edgar.McKoy

CONCRETE WEARING COURSE

☐ LOW SLUMP

☐ OTHER _____
TYPE OR MANUFACTURER

EXPANSION JOINTS

JOINT MANUFACTURER

MANUFACTURER'S IDENTIFICATION _____
MFR'S No. AND/OR LETTER DESIGNATION FOR JOINT USED

GLAND MANUFACTURER _____
NAME AND ADDRESS (CITY, STATE)

SIZE OF GLAND _____

MANUFACTURER'S IDENTIFICATION _____
MFR'S No. AND/OR LETTER DESIGNATION FOR GLAND USED

ELASTOMERIC BEARING PADS

PAD MANUFACTURER _____
NAME AND ADDRESS (CITY, STATE)

SPECIAL SURFACE FINISH

SYSTEM: _____ COLOR: _____

FINISHING ROADWAY FACES OF BARRIER RAILING

TYPE: _____ COLOR: _____

ANTI-GRAFFITI COATING

MANUFACTURER _____
NAME AND ADDRESS (CITY, STATE)

PRODUCT NAME: _____ LOCATION: _____

PAINT SYSTEM

Mn/DOT SPECIFICATION NUMBER _____
2478 OR 2479 OR OTHER

MANUFACTURER _____
NAME AND ADDRESS (CITY, STATE)

PRIME COAT _____
Mn/DOT MATERIAL SPECIFICATION NUMBER

INTERMEDIATE COAT _____
Mn/DOT MATERIAL SPECIFICATION NUMBER

FINISH COAT _____ _____
Mn/DOT MATERIAL SPECIFICATION NUMBER COLOR

PLAN QUALITY

RATE 1 (AGREE), 2 (NEUTRAL), OR 3 (DISAGREE, PLEASE COMMENT BELOW)

DIMENSIONING AND DETAILING ADEQUATELY DESCRIBED REQUIRED CONSTRUCTION. _____
BAR LISTS AND QUANTITIES WERE TYPICALLY COMPLETE AND FREE OF ERRORS. _____
SCALE OF DRAWINGS AND OVERALL LEGIBILITY OF LINES AND TEXT WAS GOOD. _____
(SB) SPECIAL PROVISIONS ADEQUATELY DESCRIBED SPECIAL WORK AND PAYMENT. _____

COMMENTS: _____

NUMBER OF BRIDGE
SUPPLEMENTAL AGREEMENTS: _____ COST: $ _____

LIST SIGNIFICANT ERRORS OR OMISSIONS IN PLAN DETAILS OR PAY QUANTITIES IN THE SPACE PROVIDED AT RIGHT.

BRIDGE REMOVAL / BRIDGE OPENING

NUMBER OF AND DATE OLD BRIDGE WAS REMOVED (IF APPLICABLE):

BRIDGE NUMBER _____ DATE REMOVED _____

DATE NEW BRIDGE WAS OPENED TO TRAFFIC _____

NOTIFY THE BRIDGE OFFICE BRIDGE MANAGEMENT UNIT WITH THIS INFORMATION AS SOON AS POSSIBLE. (651) 366-4557

OTHER ITEMS ①

① UTILITIES ADDED DURING CONSTRUCTION AND SPECIALTY ITEMS.

FINAL QUANTITIES ENTERED ON SCHEDULE OF QUANTITIES: YES ☐ NO ☐

SUMMARY OF SIGNIFICANT AS-BUILT CHANGES

THE AS-BUILT INFORMATION WAS ADDED TO THE PLAN BY:

_____ _____
INSPECTOR(S) SIGNATURE DATE

CHECKED BY: _____ _____
PROJECT ENGINEER/SUPERVISOR SIGNATURE DATE

AT THE TIME OF THE FINAL, THIS COMPLETED AS-BUILT BRIDGE DATA SHEET MUST BE SUBMITTED TO THE BRIDGE OFFICE - ATTN: REGIONAL CONSTRUCTION ENGINEER (MS610).

REVISION: 10-28-2008

APPROVED: SEPTEMBER 26, 2003
Daniel T. Hogan
STATE BRIDGE ENGINEER

AS-BUILT DETAILS
(AS NEEDED)

FIG. 5-397.900

TITLE: AS-BUILT BRIDGE DATA

DES:	DR:	APPROVED:	BRIDGE NO.
CHK:	CHK:		CBR27J60

SHEET NO. 29 OF 37 SHEETS

CONTRACTED PROFILE

SCALE HOR: 0 50'

SCALE VER: 0 5'

PROFILE GRADE CEDAR LAKE LRT TRAIL (CEDAR LAKE LRT TRAIL)

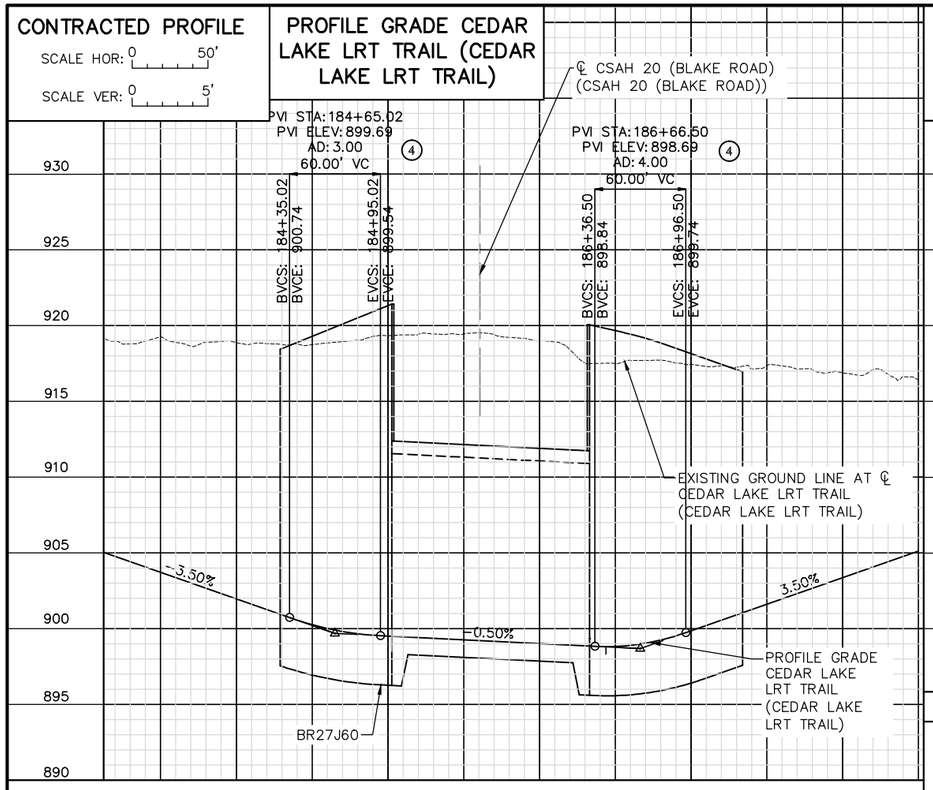

CONTRACTED PROFILE

SCALE HOR: 0 50'

SCALE VER: 0 5'

PROFILE GRADE CSAH 20 (BLAKE RD) (CSAH 20 (BLAKE RD))

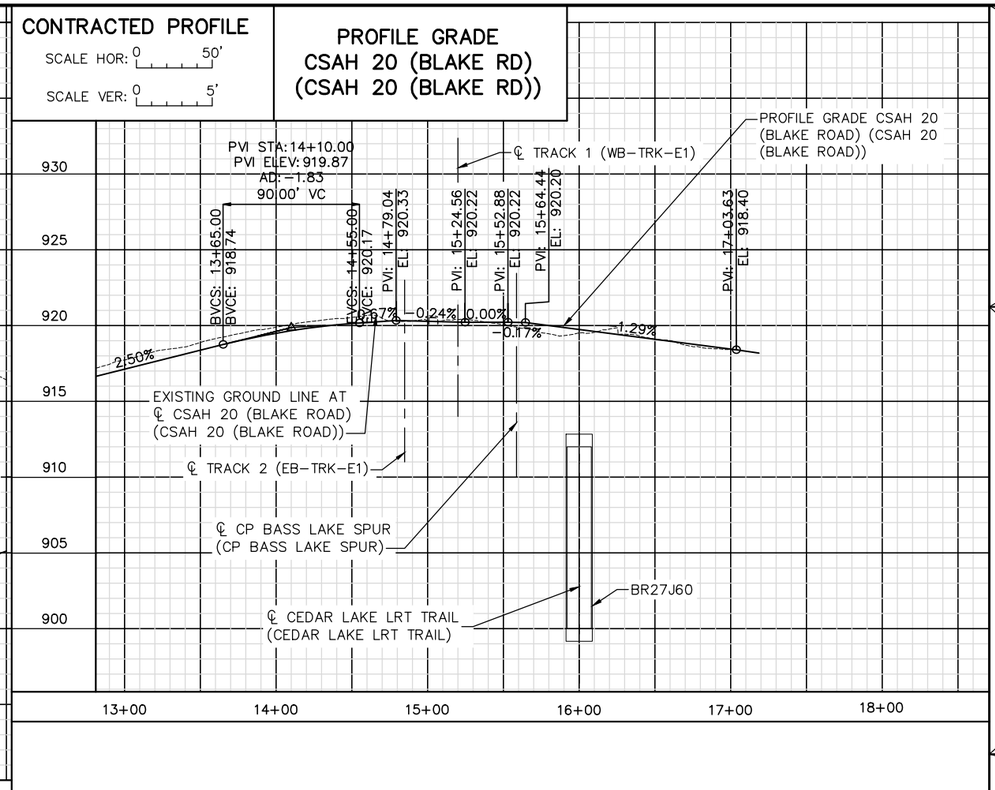

PLAT

SCALE: 0 30'

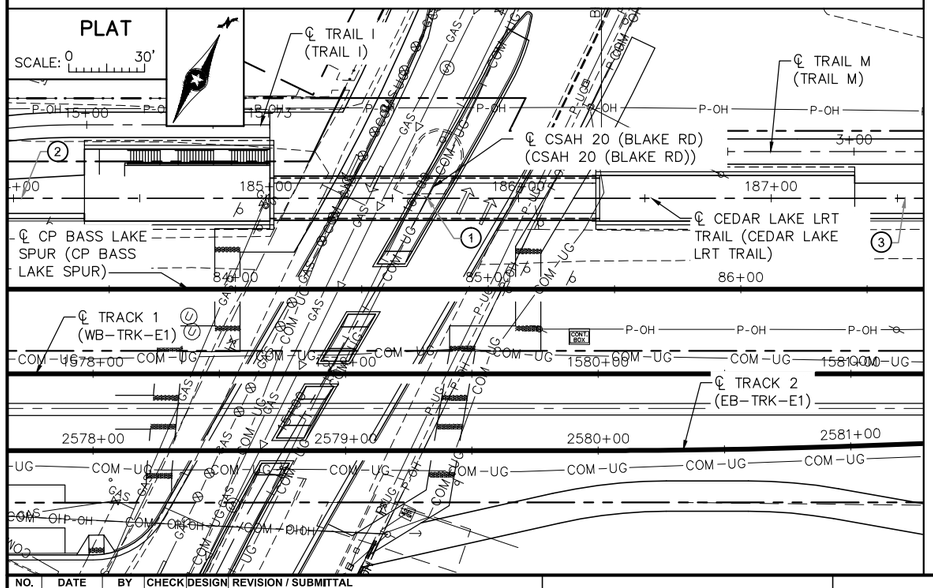

NOTES:

1. CONTROL POINT
   ℄ CEDAR LAKE LRT TRAIL (CEDAR LAKE LRT TRAIL) STA. 185+72.01
   ℄ CSAH 20 (CSAH 20 (BLAKE RD)) STA. 15+99.94
   X = 499415.390
   Y = 150035.659
   ANGLE = 62°6'37.8"
   SKEW ANGLE = 27°53'22.2"

2. ℄ CEDAR LAKE TRAIL (CEDAR LAKE LRT TRAIL) 184+11.20 =
   ℄ CEDAR LAKE TRAIL (BLAKE-BRD) STA. 9+50.00
   X=499270.369
   Y=149966.176

3. ℄ CEDAR LAKE TRAIL (CEDAR LAKE LRT TRAIL) 187+61.20 =
   ℄ CEDAR LAKE TRAIL (BLAKE-BRD) STA. 13+00.00
   X=499586.010
   Y=150117.406

4. VERTICAL CURVE STATIONS AND ELEVATIONS ARE ALONG THE CEDAR LAKE LRT TRAIL ALIGNMENT

BR27J60

INDEX MAP

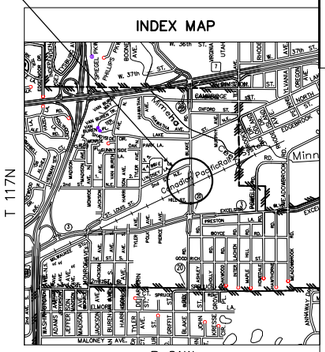

T 117N

R 21W

LOCATION ENGINEER'S OBSERVATIONS AT BRIDGE SITE

1. SPECIAL FEATURES: WATERFALLS, DAMS, FLOODS, ICE, DEBRIS SLIDING BANKS, RECREATIONAL BOATING.
2. OTHER BRIDGES OR CULVERTS OVER THE SAME STREAM (PARTICULARY STRUCTURES WHICH CARRY HIGH WATER WITHOUT OVERFLOW OF ROADWAY): GIVEN LOCATION, TYPE, LENGTH, HEIGHT ABOVE HIGH WATER, CROSS-SECTIONAL AREA ETC.
3. APPARENT HIGHWATER ELEVATION OBTAINED FROM:
4. OTHER DATA: APPROX. VELOCITY OF WATER AT TIME OF SURVEY.

HYDRAULIC ENGINEER'S RECOMMENDATION

DATE:

STREAM OR DITCH DESIGNATION

DRAINAGE AREA

MAX FLOOD ON RECORD

DESIGN FLOOD (YR. FREQ.): C.F.S.
HEADWATER ELEVATION: FT.
DESIGN MEAN VELOCITY THROUGH STRUCTURE F.P.S.
TOTAL STAGE INCREASE FT.
LOW MEMBER AT OR ABOVE ELEVATION FT.

WATERWAY AREA REQUIRED BELOW ELEV. = SQ. FT.
AT RIGHT ANGLES TO CHANNEL

BASIC FLOOD (100 YR. FREQ.) C.F.S.
HEADWATER ELEVATION: FT.
TOTAL STAGE INCREASE FT.
MEAN VELOCITY THROUGH STRUCTURE

FLOWLINE ELEVATION: FT. SKEW ANGLE:

ESTIMATED PRLIMINARY TOTAL SCOUR AT PIER EL. (500 OR OT YR. FREQ.)

SCOUR CONFIRMATION RECOMMENDATION

DATE:

TOTAL SCOUR AT PIER EL. (500 OR OT YR. FREQ.)
SCOUR CODE: OBTAIN FROM HYDRAULIC ENGINEER

BRIDGE SURVEY SHEETS MADE FROM 2014 SAMBATEK SURVEYS
1ST BENCH MARK (NAVD 88)
ELEVATION: 918.89
NORTHING: 149783.107
EASTING: 499410.127
DESCRIPTION: SPIKE IN CONC. ISLAND

2ND BENCH MARK (NAVD 88)
ELEVATION: 916.31
NORTHING: 150249.301
EASTING: 499454.073
DESCRIPTION: SPIKE IN WALK

BRIDGE SURVEY

CSAH20 OVER CEDAR LAKE LRT TRAIL 0.7 MI S OF JCT. OF T.H.7 & CSAH20

SEC 19 T 117N R 21W

CITY OF HOPKINS HENNEPIN COUNTY

BRIDGE 27J60

NO.	DATE	BY	CHECK	DESIGN	REVISION / SUBMITTAL
.	.	.	.	.	.

DESIGNED BY: AMC CHECKED BY: MTC

DRAWN BY: EBM CHECKED BY: LKZ

AECOM Kimley»Horn

METROPOLITAN COUNCIL

SOUTHWEST Green Line LRT Extension

90% SUBMISSION - 01/22/16

CIVIL - VOLUME 4D
BLAKE RD PEDESTRIAN UNDERPASS
BRIDGE 27J60
BRIDGE SURVEY 1

DISCIPLINE: STRUCTURES

SHEET NAME: CBR27J60-SUR-001

SHEET 30 OF 37

Jan, 13 2016 05:08 pm V:\3400_ADC\CAD\SEGMENT E1\PLAN SHEETS\STRUCTURES\27J60\CBR27J60-SUR-001.dwg By: Edgar.McKoy

CONTRACTED PROFILE

SCALE HOR: 0 50'

SCALE VER: 0 5'

PROFILE GRADE TRAIL I (TRAIL I)

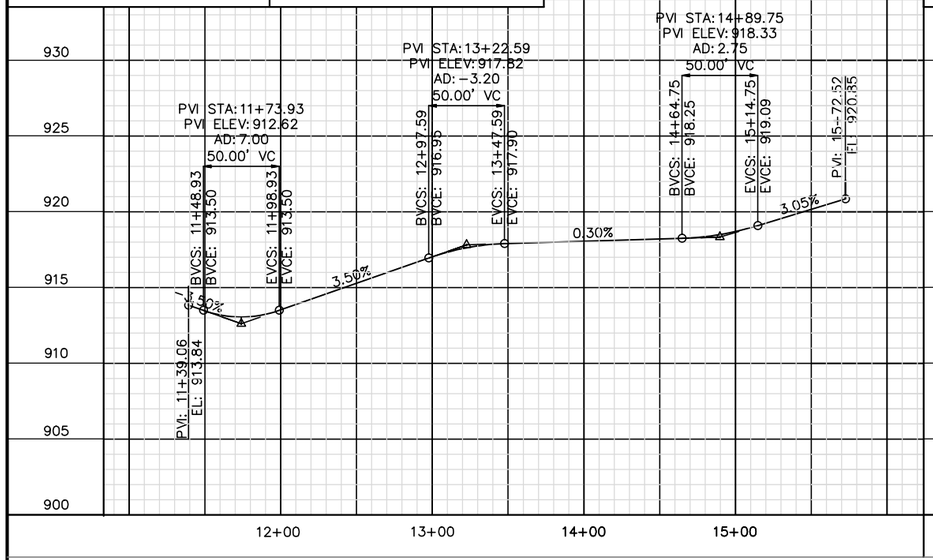

CONTRACTED PROFILE

SCALE HOR: 0 50'

SCALE VER: 0 5'

PROFILE GRADE TRAIL M (TRAIL M)

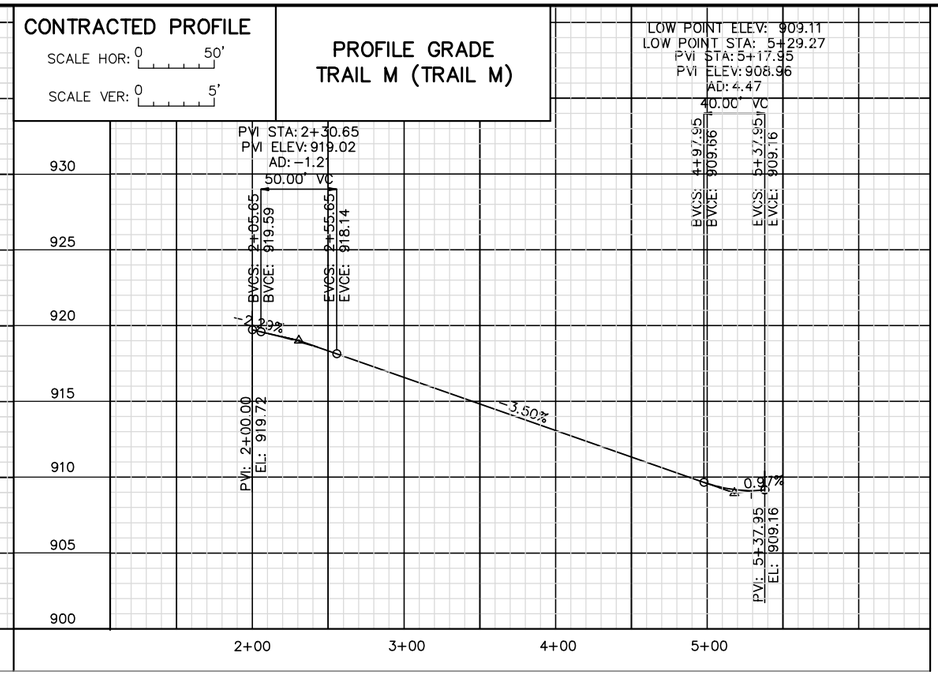

LOCATION ENGINEER'S OBSERVATIONS AT BRIDGE SITE

1. SPECIAL FEATURES: WATERFALLS, DAMS, FLOODS, ICE, DEBRIS SLIDING BANKS, RECREATIONAL BOATING.
2. OTHER BRIDGES OR CULVERTS OVER THE SAME STREAM (PARTICULARY STRUCTURES WHICH CARRY HIGH WATER WITHOUT OVERFLOW OF ROADWAY): GIVEN LOCATION, TYPE, LENGTH, HEIGHT ABOVE HIGH WATER, CROSS-SECTIONAL AREA ETC.
3. APPARENT HIGHWATER ELEVATION OBTAINED FROM:
4. OTHER DATA: APPROX. VELOCITY OF WATER AT TIME OF SURVEY.

HYDRAULIC ENGINEER'S RECOMMENDATION

DATE:

STREAM OR DITCH DESIGNATION

DRAINAGE AREA

MAX FLOOD ON RECORD

DESIGN FLOOD (YR. FREQ.): C.F.S.
HEADWATER ELEVATION: FT.
DESIGN MEAN VELOCITY THROUGH STRUCTURE F.P.S.
TOTAL STAGE INCREASE FT.
LOW MEMBER AT OR ABOVE ELEVATION FT.

WATERWAY AREA REQUIRED BELOW ELEV. = SQ. FT.
AT RIGHT ANGLES TO CHANNEL

BASIC FLOOD (100 YR. FREQ.) C.F.S.
HEADWATER ELEVATION: FT.
TOTAL STAGE INCREASE FT.
MEAN VELOCITY THROUGH STRUCTURE

FLOWLINE ELEVATION: FT. SKEW ANGLE:

ESTIMATED PRLIMINARY TOTAL SCOUR AT PIER EL.
(500 OR OT YR. FREQ.)

SCOUR CONFIRMATION RECOMMENDATION

DATE:

TOTAL SCOUR AT PIER EL. (500 OR OT YR. FREQ.)
SCOUR CODE: OBTAIN FROM HYDRAULIC ENGINEER

NOTES:

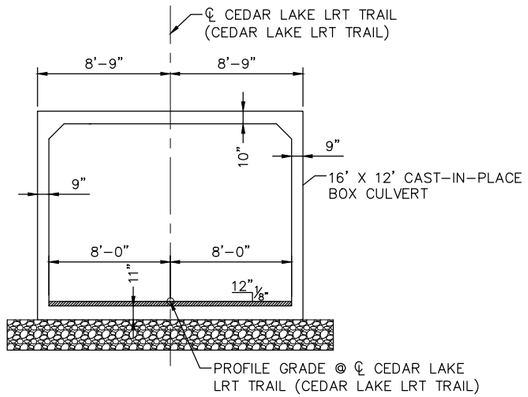

TYPICAL SECTION–CEDAR LAKE LRT TRAIL

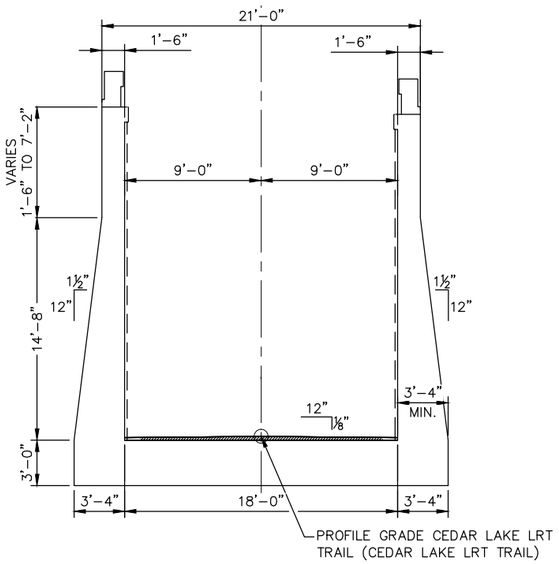

TYPICAL EAST APPROACH SECTION – CEDAR LAKE LRT TRAIL

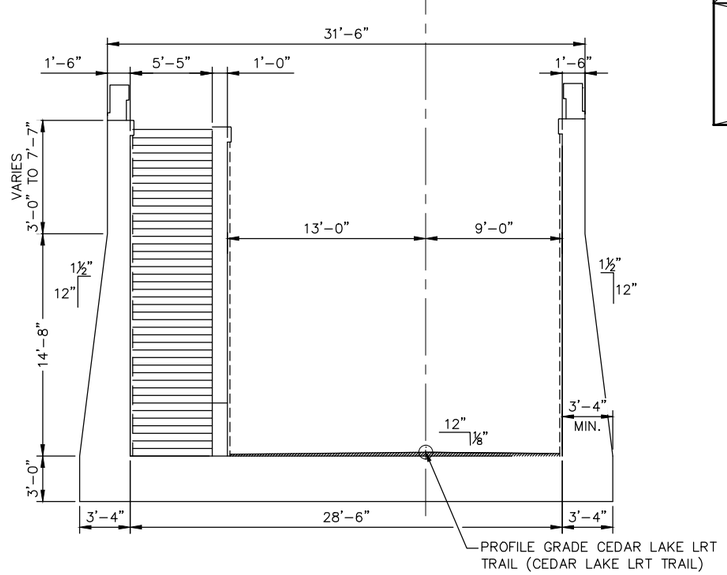

TYPICAL WEST APPROACH SECTION – CEDAR LAKE LRT TRAIL

NO.	DATE	BY	CHECK	DESIGN	REVISION / SUBMITTAL
.	.	.	.	.	.
.	.	.	.	.	.
.	.	.	.	.	.
.	.	.	.	.	.
.	.	.	.	.	.
.	.	.	.	.	.
.	.	.	.	.	.
.	.	.	.	.	.
.	.	.	.	.	.

DESIGNED BY: AMC | CHECKED BY: MTC
DRAWN BY: EBM | CHECKED BY: LKZ

AECOM Kimley»Horn

90% SUBMISSION - 01/22/16

METROPOLITAN COUNCIL

SOUTHWEST Green Line LRT Extension

CIVIL - VOLUME 4D
BLAKE RD PEDESTRIAN UNDERPASS
BRIDGE 27J60
BRIDGE SURVEY 2

DISCIPLINE: STRUCTURES

SHEET NAME: CBR27J60-SUR-002

SHEET 31 OF 37

Jan, 13 2016 05:11 pm V:\3400_ADC\CAD\SEGMENT E1\PLAN SHEETS\STRUCTURES\27J60\CBR27J60-SUR-002.dwg By: Edgar.McKoy

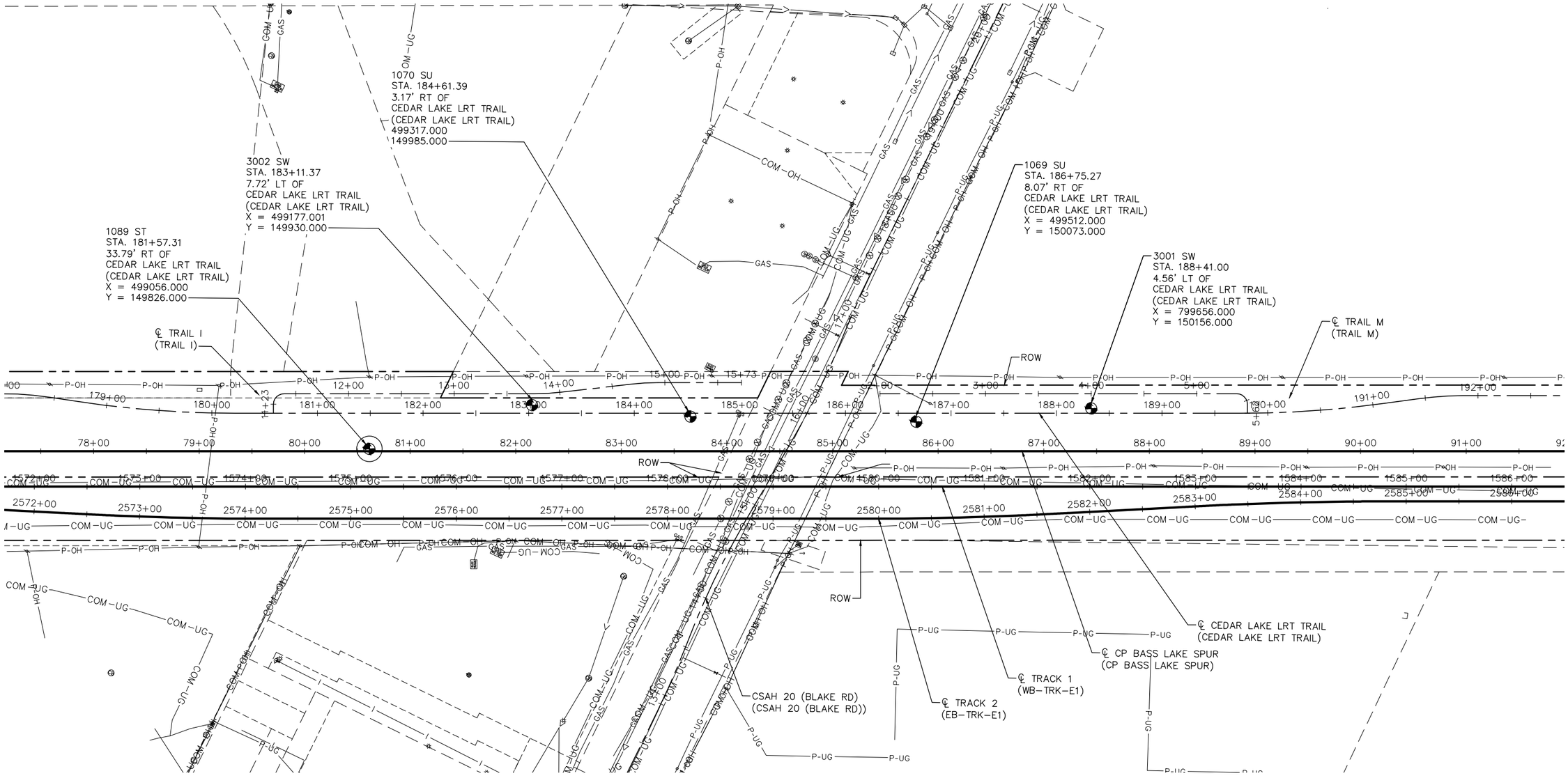

BORING PLAN

NOTES:

THE SUBSURFACE UTILITY INFORMATION IN THIS PLAN IS UTILITY QUALITY LEVEL D. THIS UTILITY LEVEL QUALITY WAS DETERMINED ACCORDING TO GUIDELINES OF CI/ASCE 38–02, ENTITLED "STANDARD GUIDELINES FOR THE COLLECTION AND DEPICTION OF EXISTING SUBSURFACE UTILITY DATA."

NO.	DATE	BY	CHECK	DESIGN	REVISION / SUBMITTAL

DESIGNED BY: AMC | CHECKED BY: MTC
DRAWN BY: EBM | CHECKED BY: LKZ

AECOM Kimley»Horn

90% SUBMISSION - 01/22/16

METROPOLITAN COUNCIL

SOUTHWEST Green Line LRT Extension

CIVIL - VOLUME 4D
BLAKE RD PEDESTRIAN UNDERPASS
BRIDGE 27J60
BRIDGE SURVEY PLAN

DISCIPLINE: STRUCTURES

SHEET NAME: CBR27J60-BOR-001

SHEET 32 OF 37

Jan, 13 2016 05:12 pm V:\3400_ADC\CAD\SEGMENT E1\PLAN SHEETS\STRUCTURES\27J60\CBR27J60-BOR-001.dwg By: Edgar.McKoy

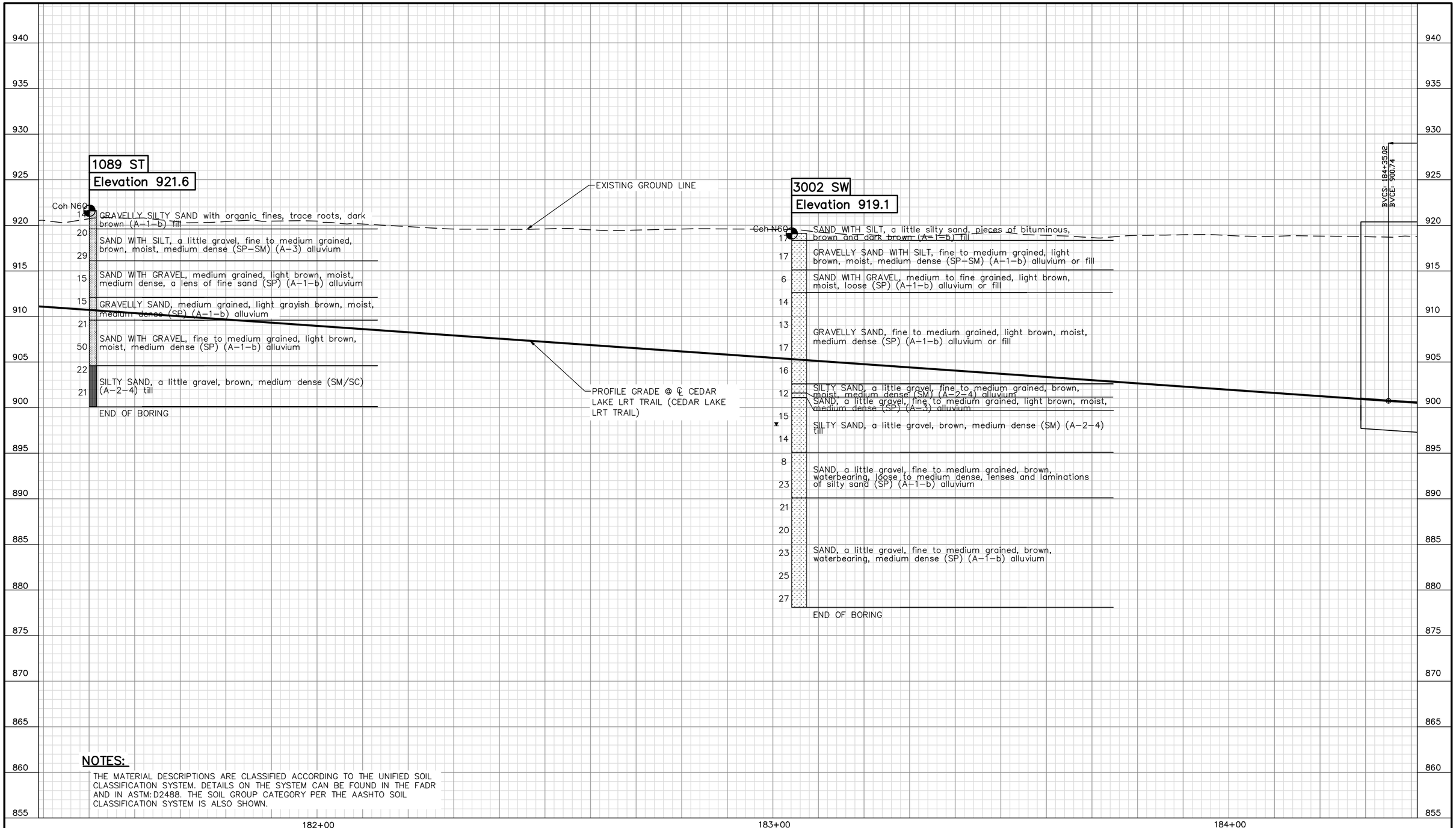

NOTES:

THE MATERIAL DESCRIPTIONS ARE CLASSIFIED ACCORDING TO THE UNIFIED SOIL CLASSIFICATION SYSTEM. DETAILS ON THE SYSTEM CAN BE FOUND IN THE FADR AND IN ASTM:D2488. THE SOIL GROUP CATEGORY PER THE AASHTO SOIL CLASSIFICATION SYSTEM IS ALSO SHOWN.

NO.	DATE	BY	CHECK	DESIGN	REVISION / SUBMITTAL

DESIGNED BY: AMC | CHECKED BY: MTC
DRAWN BY: EBM | CHECKED BY: LKZ

AECOM Kimley»Horn

90% SUBMISSION - 01/22/16

METROPOLITAN COUNCIL

SOUTHWEST Green Line LRT Extension

CIVIL - VOLUME 4D
BLAKE RD PEDESTRIAN UNDERPASS
BRIDGE SURVEY
BRIDGE SURVEY PROFILE 1

DISCIPLINE: STRUCTURES

SHEET NAME: CBR27J60-BOR-002

SHEET 33 OF 37

Jan, 13 2016 05:13 pm V:\3400_ADC\CAD\SEGMENT E1\PLAN SHEETS\STRUCTURES\27J60\CBR27J60-BOR-002.dwg By: Edgar.McKoy

PVI STA:184+65.02
PVI ELEV:899.69
AD:3.00
K:19.98
60.00' VC
(1)

EVCS: 184+95.02
EVCE: 899.34

1070 SU
Elevation 920.0

Coh N60

12 SILTY SAND WITH GRAVEL, trace roots, brown (A-1-b) fill

6 MIXTURE OF SILTY SAND AND SANDY LEAN CLAY, a little gravel, trace roots, brown (A-2-4) fill

32 SAND, a little gravel, fine to medium grained, light brown, moist, dense (SP) (A-3) alluvium

34
17
25
29
26
30 SAND WITH GRAVEL, medium to fine grained, light brown to brown, moist, dense to medium dense (SP) (A-1-b) alluvium

12
8 CLAYEY SAND, a little gravel, brown, stiff to firm (SC) (A-2-4) till

17
9 SILTY SAND, a little gravel, brown, medium dense to loose (SM/SC) (A-2-4) till

END OF BORING

EXISTING GROUND LINE

PROFILE GRADE @ ℄ CEDAR LAKE LRT TRAIL (CEDAR LAKE LRT TRAIL)

LOW POINT ELEV: 898.82
LOW POINT STA: 186+43.95
PVI STA:186+66.50
PVI ELEV:898.69
AD:4.00
K:15.01
60.00' VC
(1)

BVCS: 186+36.50
BVCE: 898.84

EVCS: 186+96.50
EVCE: 899.74

1069 SU
Elevation 918.0

Coh N60

18 SILTY SAND WITH GRAVEL, a little ashes/cinders, trace roots, dark brown (A-1-b) fill

24 SILTY SAND, a little gravel, dark brown (A-2-4) fill

SAND WITH GRAVEL, brown (A-1-b) fill

6
9 LEAN CLAY, trace roots, dark brown, a little brown, firm to stiff, laminations of silty sand (CL) (A-6) alluvium

11 LEAN CLAY, brown and light brown, stiff (CL) (A-6) alluvium

15 SILTY SAND, a little gravel, fine grained, brown, moist, medium dense (SM) (A-2-4) alluvium

16 SAND WITH GRAVEL, fine to medium grained, light brown, moist, medium dense (SP) (A-1-b) alluvium

38 SAND, a little gravel, fine to medium grained, light brown, dense (SP) (A-3) alluvium

23 SAND WITH GRAVEL, fine to medium grained, light brown, moist, medium dense (SP) (A-1-b) alluvium

12
12 SAND, a little gravel, medium to fine grained, brown, waterbearing, medium dense (SP) (A-1-b) alluvium

27 SAND WITH SILT AND GRAVEL, medium to fine grained, brown, waterbearing, medium dense (SP-SM) (A-1-b) alluvium

33 CLAYEY SAND, a little gravel, brownish gray, hard, lenses and laminations of silty sand (SC) (A-2-4) till

END OF BORING

940 935 930 925 920 915 910 905 900 895 890 885 880 875 870 865 860 855

185+00 186+00 187+00

NOTES:

THE MATERIAL DESCRIPTIONS ARE CLASSIFIED ACCORDING TO THE UNIFIED SOIL CLASSIFICATION SYSTEM. DETAILS ON THE SYSTEM CAN BE FOUND IN THE FADR AND IN ASTM:D2488. THE SOIL GROUP CATEGORY PER THE AASHTO SOIL CLASSIFICATION SYSTEM IS ALSO SHOWN.

(1) VERTICAL CURVE STATIONS AND ELEVATIONS ARE ALONG THE CEDAR LAKE LRT TRAIL ALIGNMENT

NO.	DATE	BY	CHECK	DESIGN	REVISION / SUBMITTAL

DESIGNED BY: AMC | CHECKED BY: MTC
DRAWN BY: EBM | CHECKED BY: LKZ

AECOM Kimley»Horn

90% SUBMISSION - 01/22/16

METROPOLITAN COUNCIL

SOUTHWEST Green Line LRT Extension

CIVIL - VOLUME 4D
BLAKE RD PEDESTRIAN UNDERPASS BRIDGE SURVEY
BRIDGE SURVEY PROFILE 2

DISCIPLINE: STRUCTURES
SHEET NAME: CBR27J60-BOR-003

SHEET 34 OF 37

Jan, 13 2016 05:13 pm V:\3400_ADC\CAD\SEGMENT E1\PLAN SHEETS\STRUCTURES\27J60\CBR27J60-BOR-002.dwg By: Edgar.McKoy

LOW POINT ELEV: 898.82
LOW POINT STA: 186+43.95
PVI STA:186+66.50
PVI ELEV:898.69
AD:4.00
K:15.01
60.00' VC

(1)

EVCS: 186+36.50
EVCE: 899.74

1069 SU
Elevation 918.0

Coh N60

16	SILTY SAND WITH GRAVEL, a little ashes/cinders, trace roots, dark brown (A-1-b) fill
24	SILTY SAND, a little gravel, dark brown (A-2-4) fill
6	SAND WITH GRAVEL, brown (A-1-b) fill
9	LEAN CLAY, trace roots, dark brown, a little brown, firm to stiff, laminations of silty sand (CL) (A-6) alluvium
11	LEAN CLAY, brown and light brown, stiff (CL) (A-6) alluvium
15	SILTY SAND, a little gravel, fine grained, brown, moist, medium dense (SM) (A-2-4) alluvium
16	SAND WITH GRAVEL, fine to medium grained, light brown, moist, medium dense (SP) (A-1-b) alluvium
38	SAND, a little gravel, fine to medium grained, light brown, dense (SP) (A-1) alluvium
23	SAND WITH GRAVEL, fine to medium grained, light brown, moist, medium dense (SP) (A-1-b) alluvium
12	SAND, a little gravel, medium to fine grained, brown, waterbearing, medium dense (SP) (A-1-b) alluvium
27	SAND WITH SILT AND GRAVEL, medium to fine grained, brown, waterbearing, medium dense (SP-SM) (A-1-b) alluvium
33	CLAYEY SAND, a little gravel, brownish gray, hard, lenses and laminations of silty sand (SC) (A-2-4) till

END OF BORING

EXISTING GROUND LINE

PROFILE GRADE @ ℄ CEDAR LAKE LRT TRAIL (CEDAR LAKE LRT TRAIL)

3001 SW
Elevation 916.3

Coh N60

280.000VC

3	CLAYEY SAND, a little gravel, trace roots, dark brown and brown (A-6) fill
3	CLAYEY SAND, a little gravel and silty sand, trace roots, brown (A-6) fill
25	
25	
17	SAND WITH SILT AND GRAVEL, fine to medium grained, light brown, moist, medium dense (SP-SM) (A-1-b) alluvium
17	
20	
82	GRAVELLY SAND WITH SILT, fine to medium grained, brown, moist, very dense to dense, alluvium (SP-SM) (A-1-b) alluvium
34	
20	LEAN CLAY WITH SAND, a little gravel, brown, very stiff, a lens of sand (CL) (A-6) till
14	
13	
10	
60	SILTY SAND, a little gravel, brown to brownish gray, loose to very dense (SM) (A-2-4) till
19	
22	
23	

END OF BORING

940 935 930 925 920 915 910 905 900 895 890 885 880 875 870 865 860 855

187+00 188+00 189+00

NOTES:

THE MATERIAL DESCRIPTIONS ARE CLASSIFIED ACCORDING TO THE UNIFIED SOIL CLASSIFICATION SYSTEM. DETAILS ON THE SYSTEM CAN BE FOUND IN THE FADR AND IN ASTM:D2488. THE SOIL GROUP CATEGORY PER THE AASHTO SOIL CLASSIFICATION SYSTEM IS ALSO SHOWN.

(1) VERTICAL CURVE STATIONS AND ELEVATIONS ARE ALONG THE CEDAR LAKE LRT TRAIL ALIGNMENT

NO.	DATE	BY	CHECK	DESIGN	REVISION / SUBMITTAL

DESIGNED BY: AMC | CHECKED BY: MTC
DRAWN BY: EBM | CHECKED BY: LKZ

AECOM Kimley»Horn

90% SUBMISSION - 01/22/16

METROPOLITAN COUNCIL

SOUTHWEST Green Line LRT Extension

CIVIL - VOLUME 4D
BLAKE RD PEDESTRIAN UNDERPASS
BRIDGE SURVEY
BRIDGE SURVEY PROFILE 3

DISCIPLINE: STRUCTURES

SHEET NAME: CBR27J60-BOR-004

SHEET 35 OF 37

Jan, 13 2016 05:13 pm V:\3400_ADC\CAD\SEGMENT E1\PLAN SHEETS\STRUCTURES\27J60\CBR27J60-BOR-002.dwg By: Edgar.McKoy

PHASE 1:

1. PRIOR TO EXCAVATION, MEDIAN TO BE REMOVED DURING NON-PEAK TRAFFIC PERIODS. CONTRACTOR TO COORDINATE WITH CITY.
2. SHIFT TRAFFIC TO EAST BLAKE
3. PLACE TEMPORARY SHEETING
4. CONSTRUCT EAST HALF OF BR27J60 UNDER BLAKE ROAD

DEMOLITION

STANDARD MNDOT TEMPORARY BARRIERS, PLATE NO. 8337

1. REFERENCE THE MOT SPECIFICATIONS FOR ANY TEMPORARY FREIGHT SIGNALS

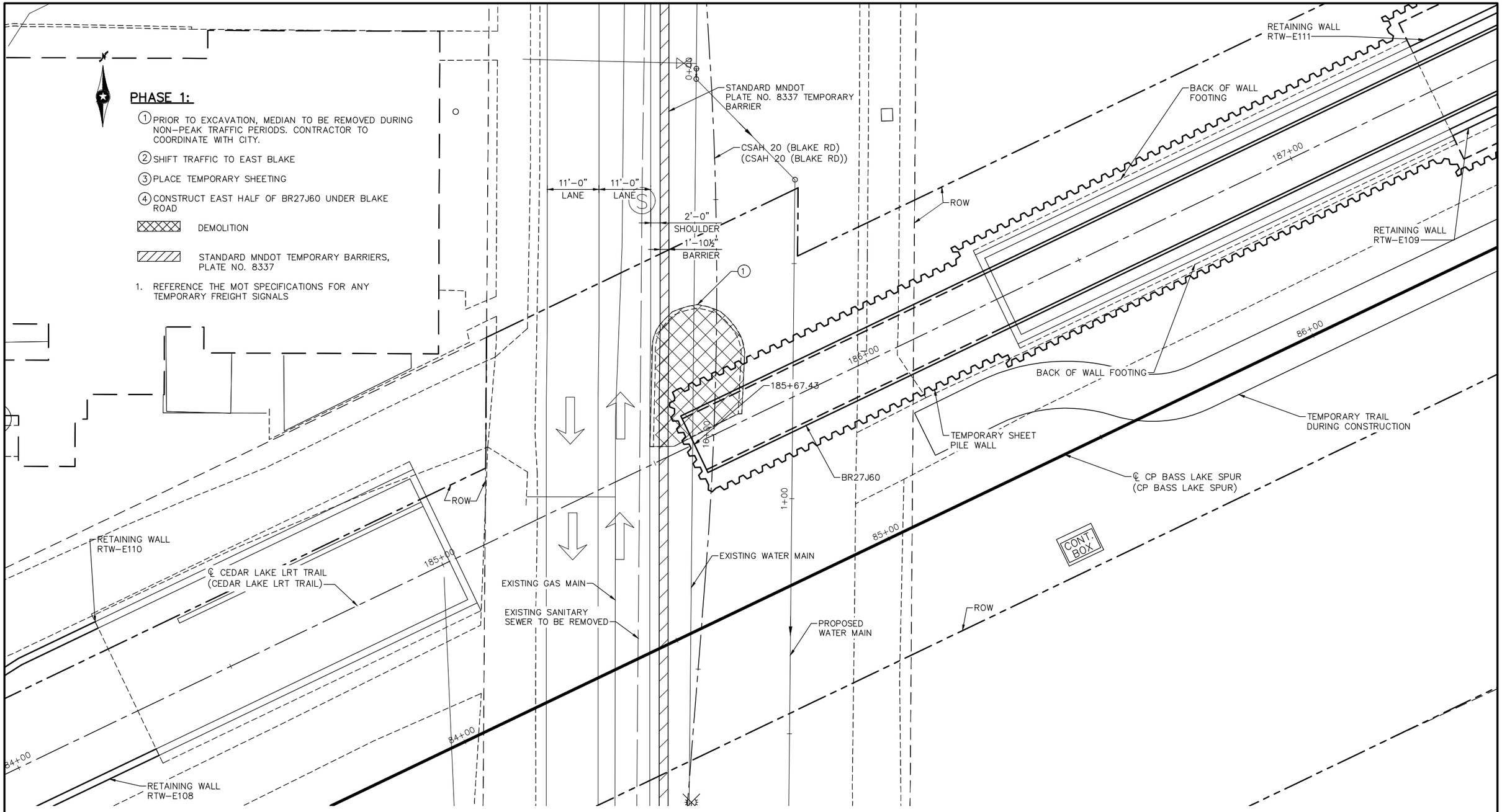

PHASE 1

NO.	DATE	BY	CHECK	DESIGN	REVISION / SUBMITTAL

DESIGNED BY: SMY | CHECKED BY: MTC
DRAWN BY: EBM | CHECKED BY: LKZ

AECOM Kimley»Horn

90% SUBMISSION - 01/22/16

METROPOLITAN COUNCIL

SOUTHWEST Green Line LRT Extension

CIVIL - VOLUME 4D
BLAKE RD PEDESTRIAN UNDERPASS
BRIDGE 27J60
STAGING PLAN 1

DISCIPLINE: STRUCTURES

SHEET NAME: CBR27J60-STG-001

SHEET 36 OF 37

Jan, 13 2016 05:17 pm V:\3400_ADC\CAD\SEGMENT E1\PLAN SHEETS\STRUCTURES\27J60\CBR27J60-STG-001.dwg By: Edgar.McKoy

PHASE 2:

1. MODIFY TEMPORARY SHEETING
2. SHIFT TRAFFIC
3. CONSTRUCT WEST HALF OF BR27J60 UNDER BLAKE ROAD

STANDARD MNDOT TEMPORARY BARRIERS, PLATE NO. 8337

1. REFERENCE THE MOT SPECIFICATIONS FOR ANY TEMPORARY FREIGHT SIGNALS

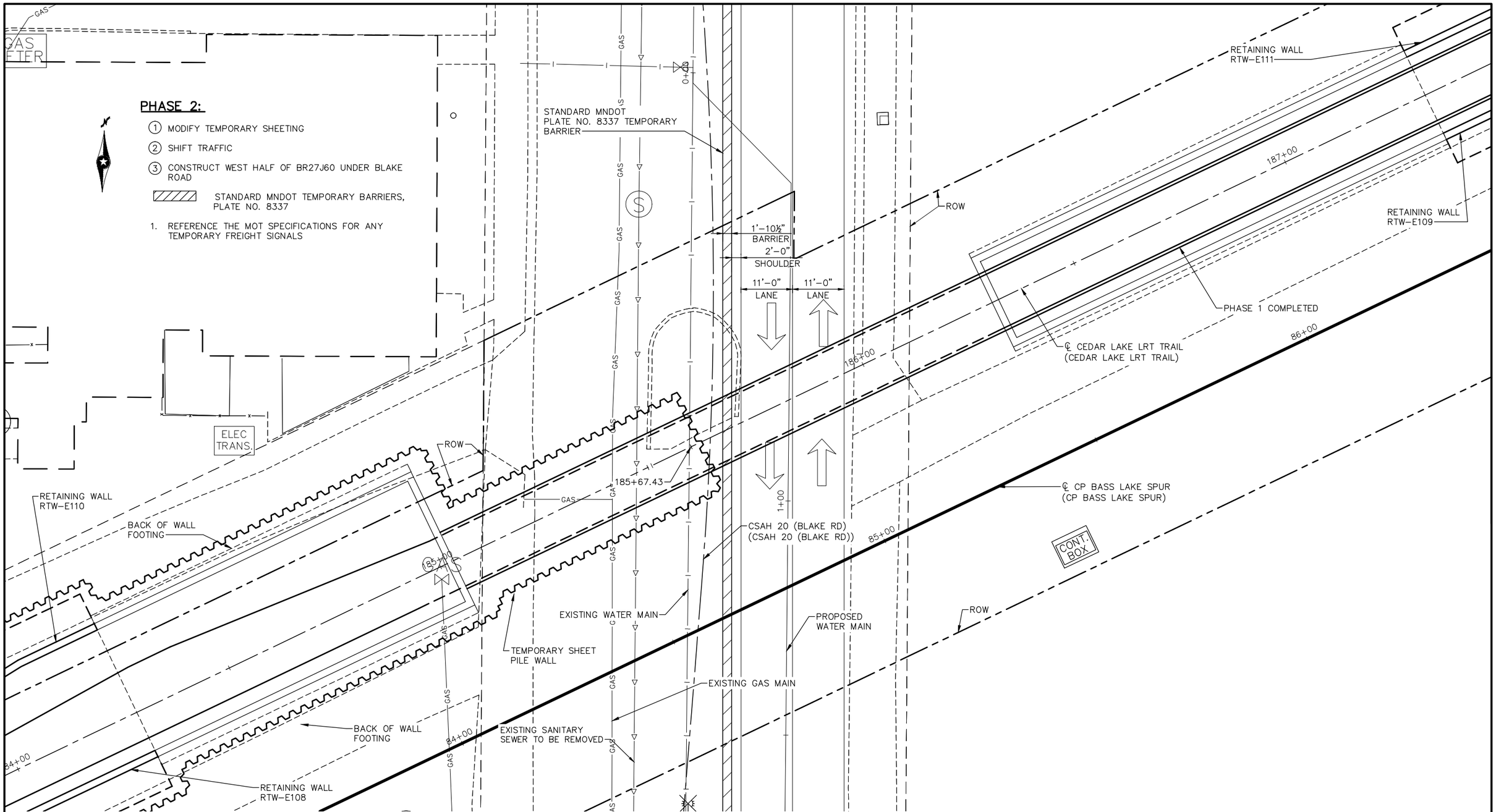

PHASE 2

NO.	DATE	BY	CHECK	DESIGN	REVISION / SUBMITTAL

DESIGNED BY: SMY | CHECKED BY: MTC
DRAWN BY: EBM | CHECKED BY: LKZ

AECOM Kimley»Horn

90% SUBMISSION - 01/22/16

METROPOLITAN COUNCIL

SOUTHWEST Green Line LRT Extension

CIVIL - VOLUME 4D
BLAKE RD PEDESTRIAN UNDERPASS
BRIDGE 27J60
STAGING PLAN 2

DISCIPLINE: STRUCTURES

SHEET NAME: CBR27J60-STG-002

SHEET 37 OF 37

Jan, 13 2016 05:20 pm V:\3400_ADC\CAD\SEGMENT E1\PLAN SHEETS\STRUCTURES\27J60\CBR27J60-STG-002.dwg By: Edgar.McKoy

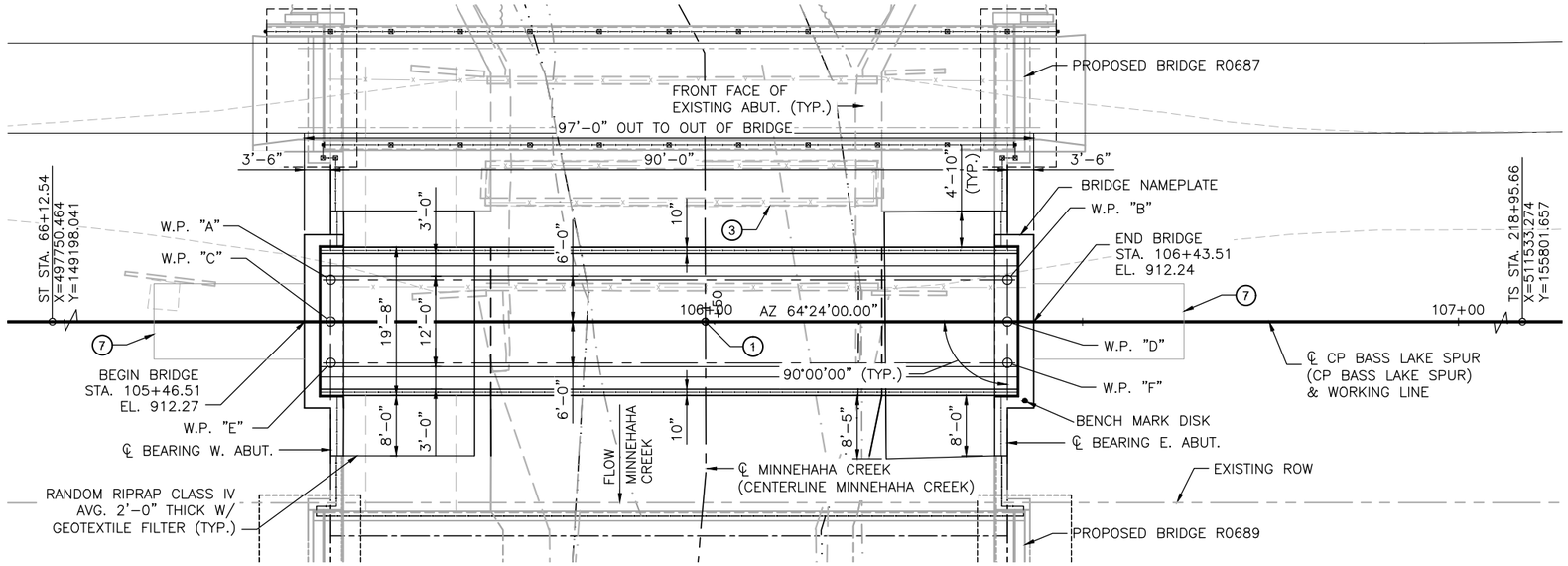

NOTES:

HATCHED AREA TO BE REMOVED

SEE BRIDGE SURVEY PLAN SHEET FOR INPLACE UTILITIES.

SEE SHEETS 42–45 FOR STAGING PLANS AND SOE.

AZIMUTH OF ALL SUBSTRUCTURE = AZ 154°24'00.00"

VERTICAL CURVE STATIONS AND ELEVATIONS ARE ALONG CP BASS LAKE SPUR.

PLANS ARE NOT AVAILABLE FOR EXISTING BRIDGES. THE EXISTING ABUTMENT STEM THICKNESS AND FOOTING LIMITS ARE UNKNOWN FOR BOTH BRIDGES.

(1) CONTROL POINT
℄ CP BASS LAKE SPUR (CP BASS LAKE SPUR) STA. 105+99.86
℄ MINNEHAHA CREEK (CENTERLINE MINNEHAHA CREEK) STA. 1+48.18
X = 501346.351
Y = 150920.901

(2) PORTION OF EXISTING SUBSTRUCTURES TO REMAIN. REDUCE HEIGHT OF EXISTING SUBSTRUCTURES TO APPROXIMATE ELEVATION 898.5±. SEE STAGING PLANS FOR SUBSTRUCTURE REMOVAL LIMITS.

(3) INPLACE BRIDGE 2–15' WIDE x 48' LONG STEEL PLATE GIRDER SPANS. SUPERSTRUCTURES TO BE REMOVED. SEE STAGING PLANS FOR REMOVAL NOTES.

(4) ABUTMENT FOOTING DEPTH DETERMINED BASE ON LOCATION OF AN ASSUMED FUTURE TRAIL. VERTICAL AND HORIZONTAL CLEARANCES BELOW SUPERSTRUCTURE MEET CURRENT REQUIREMENTS FOR 12'–0" WIDE TRAIL SECTION.

(5) ABUTMENT TESTED AND FOUND TO BE COATED WITH LEAD CONTAINING PAINT. CONTRACTOR SHALL USE APPROPRIATE CONTAINMENT AND REMOVAL METHODS.

(6) ARCHITECTURAL CONCRETE TEXTURE (STRIATED RELIEF) WITH ARCHITECTURAL SURFACE FINISH (SINGLE COLOR). SEE ABUTMENT SHEETS FOR LIMITS.

(7) TRACK TRANSITION SLAB, SEE TRACK PLANS.

GENERAL PLAN
0 5' 10' 20'
SCALE IN FEET

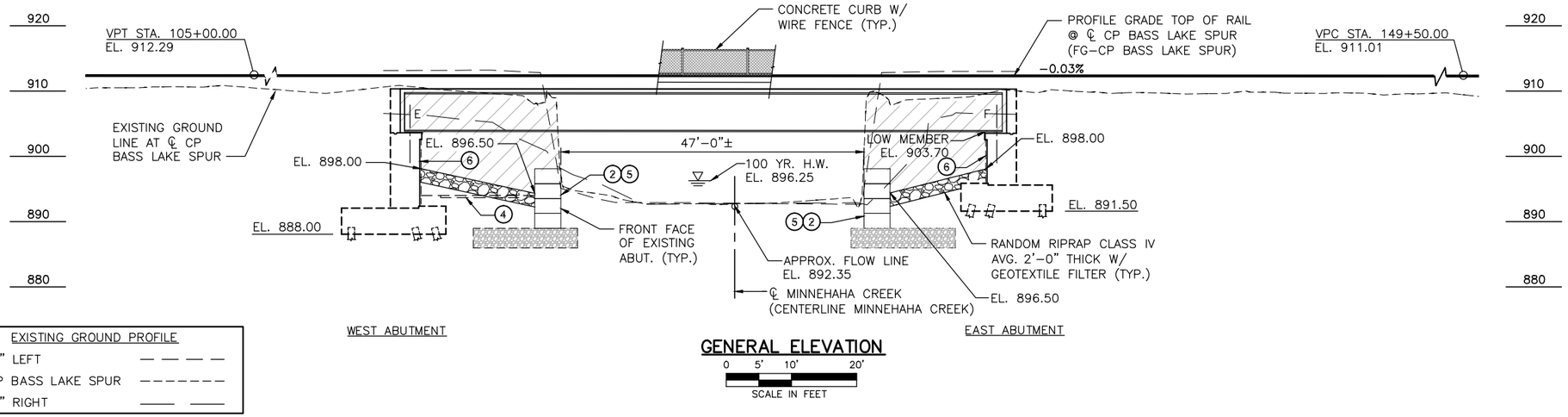

GENERAL ELEVATION
0 5' 10' 20'
SCALE IN FEET

EXISTING GROUND PROFILE
9'–0" LEFT — — — —
℄ CP BASS LAKE SPUR – – – – – – –
9'–0" RIGHT ____ ____

DESIGN DATA

2014 AREMA MANUAL FOR RAILWAY ENGINEERING

SOUTHWEST LIGHT RAIL TRANSIT DESIGN CRITERIA (REVISION 4.0)

COOPER E 90 LIVE LOAD OR 100 KIP (4 AXLES) ALTERNATE LOAD WITH DIESEL IMPACT

MAXIMUM BALLAST DEPTH = 2'–4" (FOR DESIGN)

ALLOWABLE STRESS DESIGN METHOD (STEEL)
LOAD FACTOR DESIGN METHOD (CONCRETE)

MATERIAL DESIGN PROPERTIES:
REINFORCED CONCRETE:
f'c = 4500 PSI n = 8
fy = 60000 PSI REINFORCEMENT

STRUCTURAL STEEL:
fs = 27500 PSI, fy = 50000 PSI
ASTM A709 GRADE 50WT3
(MN/DOT 3309)

DESIGN SPEED: OVER = 25 MPH

DECK AREA = 1830 SQ. FT.

LIST OF SHEETS

NO.	DESCRIPTION
1	GENERAL PLAN AND ELEVATION
2	TRANSVERSE SECTION AND QUANTITIES
3	BRIDGE LAYOUT
4–6	WEST ABUTMENT DETAILS
7–10	WEST ABUTMENT REINFORCEMENT
11–13	EAST ABUTMENT DETAILS
14–17	EAST ABUTMENT REINFORCEMENT
18	FRAMING PLAN
19	GIRDER ELEVATION
20–21	GIRDER DETAILS
22–27	SUPERSTRUCTURE DETAILS
28	WIRE FENCE (DESIGN W–1)
29–30	JOINT DETAILS
31–32	DECK DRAINAGE AND WATERPROOFING
33	BEARING ASSEMBLY DETAILS
34–35	BRIDGE DETAILS
36	AS–BUILT BRIDGE DATA
37	BRIDGE SURVEY
38	BRIDGE SURVEY PLAN
39–41	BRIDGE SURVEY PROFILE
42–45	STAGING PLANS

BRIDGE NO. R0688

CP BASS LAKE SPUR OVER MINNEHAHA CREEK
1.7 MI. S.W. JCT. OF T.H. 7 & T.H. 100
IN ST. LOUIS PARK

90'–0" STEEL WELDED PLATE GIRDER SPAN
13'–0" RAILWAY, 00°–00'–00.00" SKEW
CONCRETE CURB WITH WIRE FENCE

BRIDGE I.D. NO. 301

GENERAL PLAN AND ELEVATION

SEC 20 T 117N R 21W
CITY OF ST. LOUIS PARK HENNEPIN COUNTY

JOB NO.: T9N635 | STATE PROJ. NO.: 9909–01 | MNDOT REVIEW: JOE NIETFELD

NO.	DATE	BY	CHECK	DESIGN	REVISION / SUBMITTAL

DESIGNED BY: KR CHECKED BY: KJK
DRAWN BY: MSK CHECKED BY: KJK

AECOM Kimley»Horn

90% SUBMISSION - 01/22/16

METROPOLITAN COUNCIL

SOUTHWEST Green Line LRT Extension

CIVIL - VOLUME 4D
MINNEHAHA CREEK FREIGHT BRIDGE
BRIDGE R0688
GENERAL PLAN AND ELEVATION

DISCIPLINE: STRUCTURES
SHEET NAME: CBRR0688-BRG-GPE-001

SHEET 1 OF 45

Dec, 11 2015 09:42 am V:\3400_ADC\CAD\SEGMENT E2\PLAN SHEETS\STRUCTURES\R0688\CBRR0688-BRG-GPE-001.dwg By: kevin.kimm

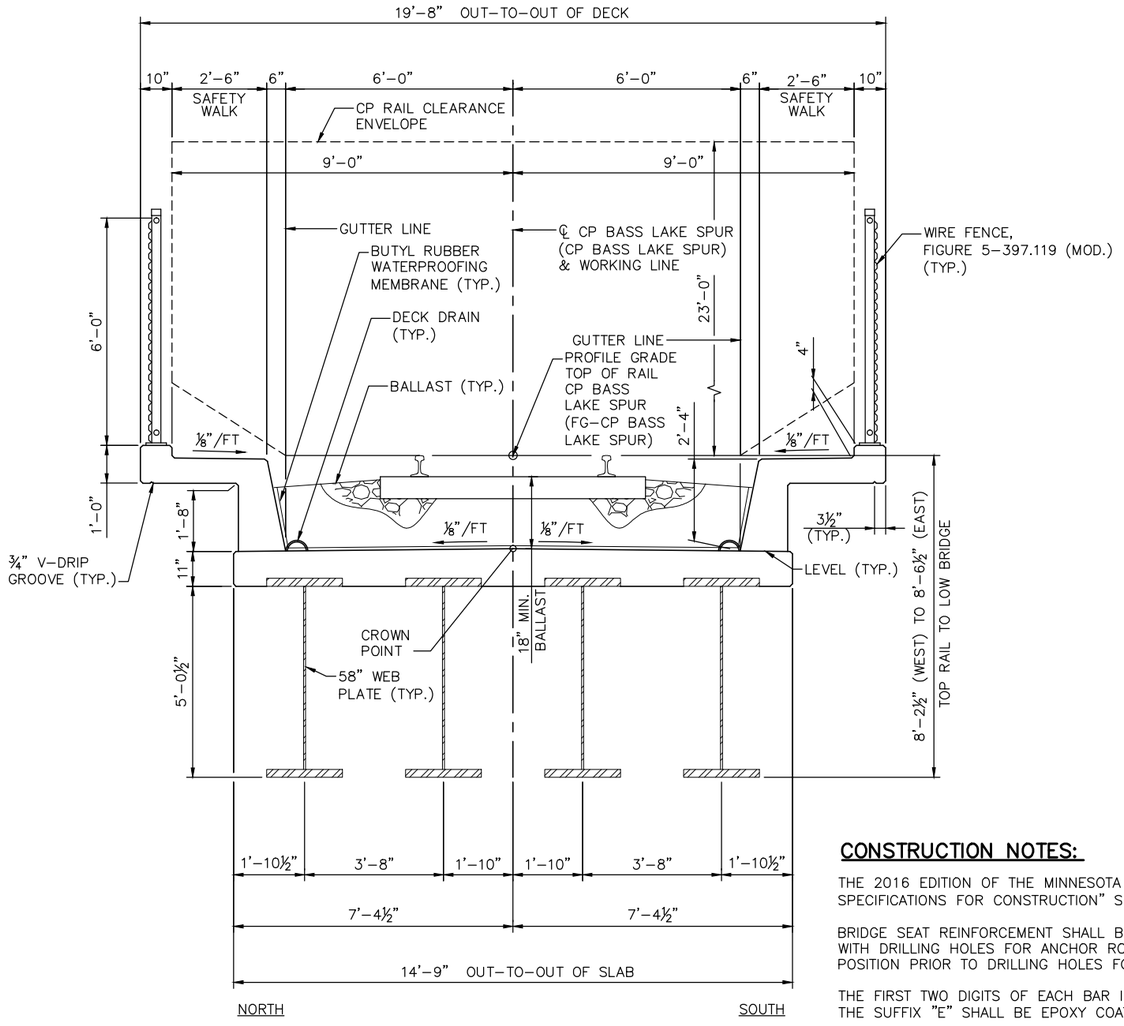

TRANSVERSE SECTION

0 1' 2' 4'

SCALE IN FEET

SCHEDULE OF QUANTITIES			
SPEC. SECTION	COMPONENT ITEM	UNIT	QUANTITY
–	CONSTRUCT BRIDGE R0688	LUMP SUM	LS

	COMPONENT ITEM SUMMARY (BRIDGE R0688)			
	ITEM NO.	COMPONENT ITEM	UNIT (2)	QUANTITY (2)
	2401	STRUCTURAL CONCRETE (1G52)	CU. YD.	
(1)	2401	STRUCTURAL CONCRETE (3B52)	CU. YD.	
	2401	REINFORCEMENT BARS	POUND	
	2401	REINFORCEMENT BARS (EPOXY COATED)	POUND	
	2401	BRIDGE SLAB CONCRETE (3YHPC-M)	CU. YD.	
	2401	STRUCTURAL STEEL (3306)	POUND	
	2401	STRUCTURAL STEEL (3309)	POUND	
	2401	BEARING ASSEMBLY	EACH	
	SB-XX	ARCHITECTURAL CONCRETE TEXTURE (STRIATED RELIEF)	SQ. FT.	
	2442	REMOVE EXISTING BRIDGE	LUMP SUM	
(4)	SB-XX	STRUCTURAL EXCAVATION CLASS U	CU. YD.	
	SB-XX	STEEL H-PILING 12"	LIN. FT.	
	2452	STEEL H-TEST PILE 70 FT LONG 12"	EACH	
	2452	STEEL H-TEST PILE 75 FT LONG 12"	EACH	
	2452	PIILE TIP PROTECTION 12"	EACH	
	SB-XX	STEEL SHEET PILING (TEMPORARY)	LUMP SUM	
	2481	MEMBRANE WATERPROOFING SYSTEM	LIN. FT.	
	2502	DRAINAGE SYSTEM TYPE (B910)	LUMP SUM	
	2502	DRAINAGE SYSTEM (BRIDGE DECK)	LUMP SUM	
	2511	RANDOM RIPRAP CLASS IV	CU. YD.	
	2511	GEOTEXTILE FILTER TYPE VII	SQ. YD.	
	2557	WIRE FENCE (DESIGN W-1)	LIN. FT.	

CONSTRUCTION NOTES:

THE 2016 EDITION OF THE MINNESOTA DEPARTMENT OF TRANSPORTATION "STANDARD SPECIFICATIONS FOR CONSTRUCTION" SHALL GOVERN.

BRIDGE SEAT REINFORCEMENT SHALL BE CAREFULLY PLACED TO AVOID INTERFERENCE WITH DRILLING HOLES FOR ANCHOR RODS, THE BEAMS SHALL BE ERECTED IN FINAL POSITION PRIOR TO DRILLING HOLES FOR AND PLACING ANCHOR RODS.

THE FIRST TWO DIGITS OF EACH BAR INDICATE THE BAR SIZE. BARS MARKED WITH THE SUFFIX "E" SHALL BE EPOXY COATED IN ACCORDANCE WITH SPEC. 3301.

THE PILE LOADS SHOWN IN THE PLANS WERE COMPUTED USING SERVICE LOAD METHODOLOGY. PILE BEARING RESISTANCE DETERMINED IN THE FIELD SHALL INCORPORATE THE METHODS AND/OR FORMULAS DESCRIBED IN THE SPECIAL PROVISIONS.

THE SUBSURFACE UTILITY INFORMATION IN THIS PLAN IS UTILITY QUALITY LEVEL D. THIS UTILITY QUALITY LEVEL WAS DETERMINED ACCORDING TO THE GUIDELINES OF CI/ASCE 38–02, ENTITLED "STANDARD GUIDELINES FOR THE COLLECTION AND DEPICTION OF EXISTING SUBSURFACE UTILITY DATA".

CONCRETE MATERIALS, MIX DESIGN, TESTING AND CONSTRUCTION SHALL BE IN ACCORDANCE WITH CHAPTER 8, PART 1 OF THE 2014 A.R.E.M.A. MANUAL; MnDOT 2461 AND THE SPECIAL PROVISIONS.

GROUNDING NOTES:

SEE SHEETS ELE–SITE–SCH–504, ELE–SITE–DTL–600, ELE–SITE–DTL–601, AND ELE–SITE–DTL–602 FOR ADDITIONAL FENCE GROUNDING INFORMATION. FOR BRIDGES, ABUTMENTS, AND RETAINING WALLS THAT DON'T HAVE STRAY CURRENT SYSTEMS, GROUND THE FENCE AS SHOWN IN THE WIRE FENCE DETAIL.

NOTES:

(1) A BENCH MARK IS REQUIRED. LOCATED AT THE SE CORNER OF THE BRIDGE. STATE WILL FURNISH DISK. BEND PRONGS OUTWARD TO ANCHOR DISK IN CONCRETE. BOTTOM OF DISK TOP TO BE PLACED FLUSH WITH CONCRETE.

(2) QUANTITIES LISTED FOR THE COMPONENT ITEMS OF THE LUMP SUM BR R0688 ITEM ARE FOR INFORMATIONAL PURPOSES. ANY ADDITIONAL ITEMS OR CHANGES IN QUANTITIES REQUIRED SHALL BE PROVIDED BY THE CONTRACTOR WITH NO ADDITIONAL COMPENSATION.

(3) MEASUREMENT AND PAYMENT FOR COMPONENT ITEMS SHALL BE PART OF THE LUMP SUM PAYMENT FOR THE BR R0688. REFER TO MnDOT STANDARD SPECIFICATION OR SPECIAL PROVISION FOR TECHNICAL SPECIFICATION REQUIREMENTS FOR ALL PROVISION OTHER THAN MEASUREMENT AND PAYMENT REQUIREMENTS.

(4) BACKFILL BEHIND ABUTMENTS SHALL BE SELECT GRANULAR BORROW PER SPEC. 3149.2.B.2. BACKFILL DENSITY SHALL BE ATTAINED BY THE SPECIFIED DENSITY METHOD IN ACCORDANCE WITH SPEC. 2105.3.F.1.

NO.	DATE	BY	CHECK	DESIGN	REVISION / SUBMITTAL

DESIGNED BY: KR CHECKED BY: KJK
DRAWN BY: MSK CHECKED BY: KJK

AECOM Kimley»Horn

90% SUBMISSION - 01/22/16

METROPOLITAN COUNCIL

SOUTHWEST Green Line LRT Extension

CIVIL - VOLUME 4D
MINNEHAHA CREEK FREIGHT BRIDGE
BRIDGE R0688
TRANSVERSE SECTION AND QUANTITIES

DISCIPLINE: STRUCTURES
SHEET NAME: CBRR0688-BRG-SUP-001

SHEET 2 OF 45

Dec, 11 2015 09:42 am V:\3400_ADC\CAD\SEGMENT E2\PLAN SHEETS\STRUCTURES\R0688\CBRR0688-BRG-SUP-001.dwg By: kevin.kimm

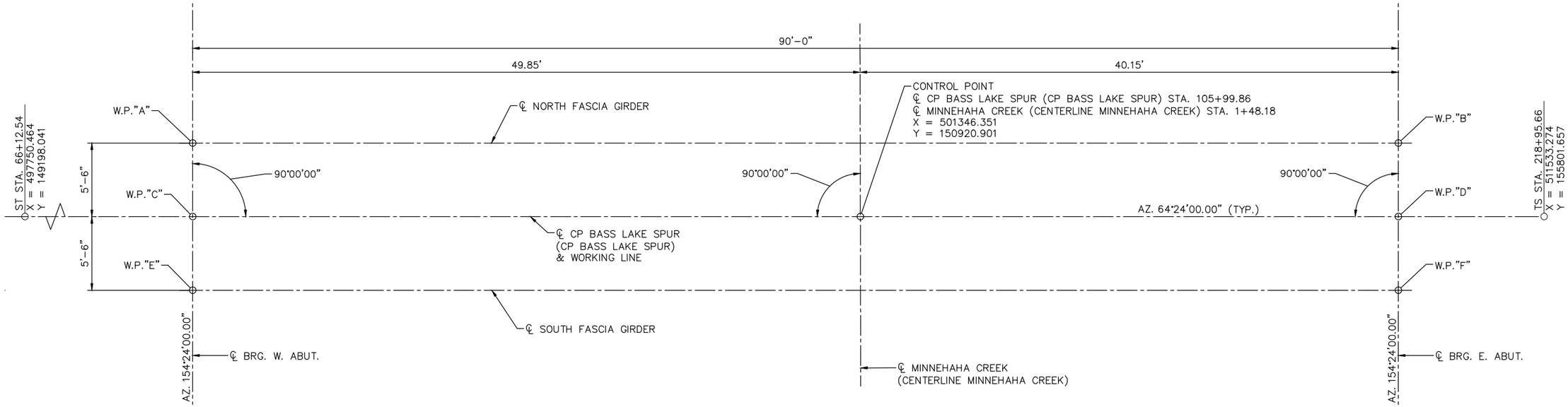

WORKING POINT LAYOUT

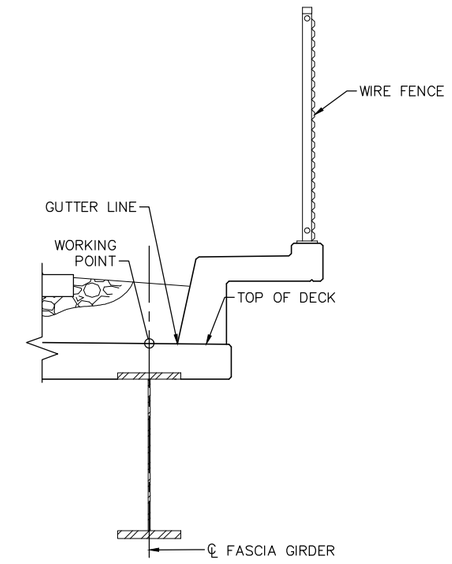

DIMENSIONS BETWEEN WORKING POINTS								COORDINATES		ELEVATION				
POINT	STATION	A	B	C	D	E	F	X	Y	TOP OF RAIL	TOP OF DECK	TOP/DECK TO BR. SEAT	BRIDGE SEAT	POINT
A	105+50.01		90.00	5.50	90.17		90.67	501299.025	150904.327	912.26	910.01	6.35	903.66	A
B	106+40.01				5.50	90.67		501380.191	150943.214	912.24	909.66	6.35	903.31	B
C	105+50.01				90.00	5.50	90.17	501301.402	150899.366	912.26	910.07			C
D	106+40.01						5.50	501382.567	150938.253	912.24	909.71			D
E	105+50.01						90.00	501303.778	150894.406	912.26	910.01	6.35	903.66	E
F	106+40.01							501384.944	150933.293	912.24	909.66	6.35	903.31	F

TOP OF BRIDGE DECK TO BRIDGE SEAT				
	W.P. "A"	W.P. "B"	W.P. "E"	W.P. "F"
SLAB THICKNESS	11 1/8"	11 1/8"	11 1/8"	11 1/8"
WEB HEIGHT	58"	58"	58"	58"
BOTTOM FLANGE HEIGHT	2 1/2"	2 1/2"	2 1/2"	2 1/2"
BEARING HEIGHT	4 5/8"	4 5/8"	4 5/8"	4 5/8"
TOTAL	6'-4 1/4"	6'-4 1/4"	6'-4 1/4"	6'-4 1/4"
	6.35	6.35	6.35	6.35

NOTES:

ALL BEAMS SET PARALLEL TO WORKING LINE, ALL DIAPHRAGMS SET PARALLEL TO SUBSTRUCTURES.

NO.	DATE	BY	CHECK	DESIGN	REVISION / SUBMITTAL

DESIGNED BY: KR | CHECKED BY: KJK
DRAWN BY: MSK | CHECKED BY: KJK

AECOM Kimley»Horn

90% SUBMISSION - 01/22/16

METROPOLITAN COUNCIL

SOUTHWEST Green Line LRT Extension

CIVIL - VOLUME 4D
MINNEHAHA CREEK FREIGHT BRIDGE
BRIDGE R0688
BRIDGE LAYOUT

DISCIPLINE: STRUCTURES
SHEET NAME: CBRR0688-BRG-SUP-003

SHEET 3 OF 45

Dec, 11 2015 09:43 am V:\3400_ADC\CAD\SEGMENT E2\PLAN SHEETS\STRUCTURES\R0688\CBRR0688-BRG-SUP-003.dwg By: kevin.kimm

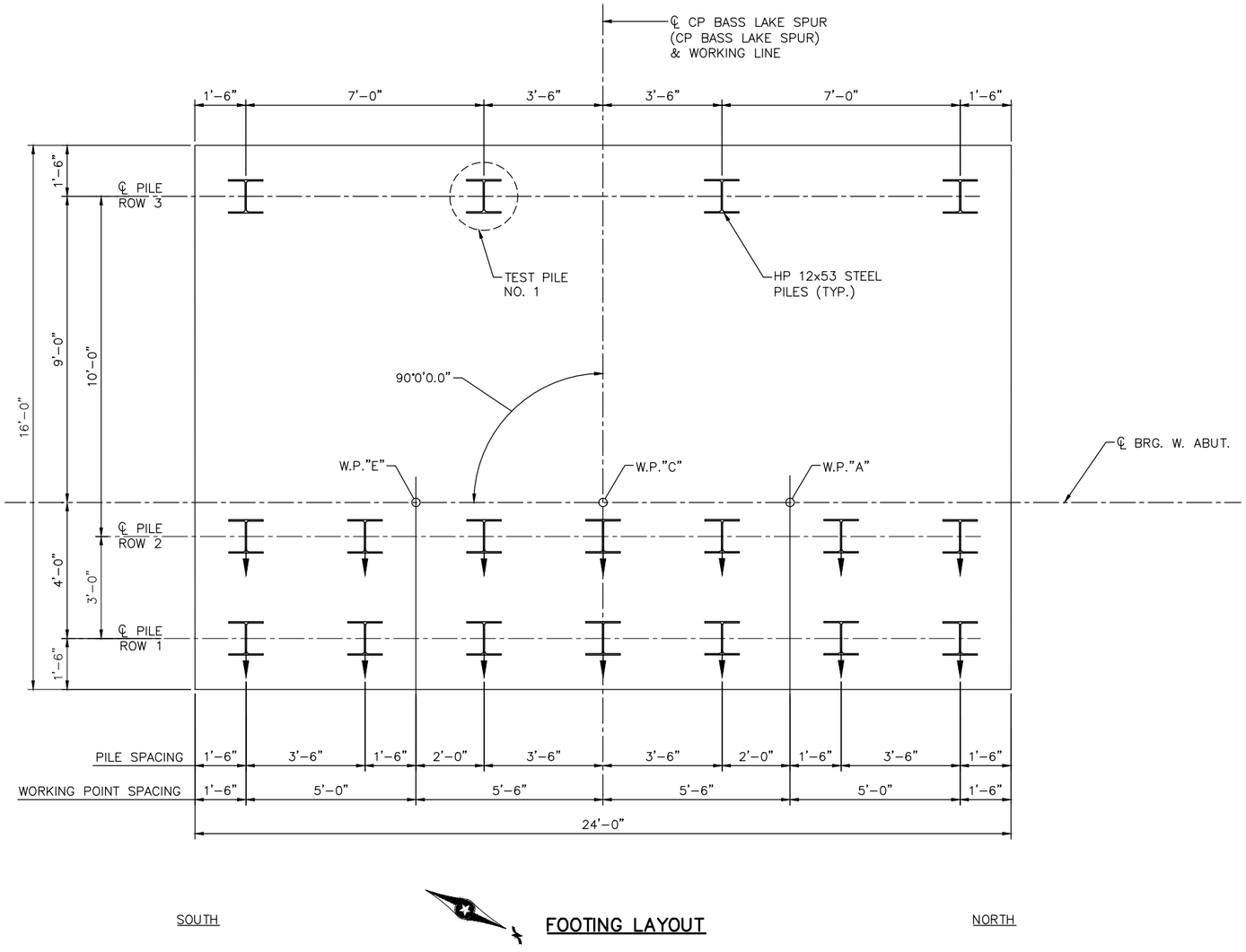

FOOTING LAYOUT

WEST ABUTMENT COMPUTED PILE LOAD - TONS/PILE	
DEAD LOAD + EARTH PRESSURE	40
LIVE LOAD	27
* DESIGN LOAD	67
* BASED ON GROUP I LOADING (SERVICE LOAD) PER AREMA CHAPTER 8 SECTION 2.2.4	

REQUIRED PILE TEST LOAD	
FIELD CONTROL METHOD	TEST LOAD
PDA	134

GENERAL PILE NOTES

1 HP12x53 STEEL TEST PILES 70 FT. LONG
17 HP12x53 STEEL PILES EST. 70 FT. LENGTH
18 HP12x53 STEEL PILES REQ'D FOR WEST ABUT.

ALL PILES TO BE HP12x53 WITH PILE TIP PROTECTION.

PILE SPACING SHOWN IS AT BOTTOM OF FOOTING.

PILES MARKED THUS ⊥ TO BE BATTERED 3" PER FOOT IN DIRECTION SHOWN.

FOR PILE SPLICE DETAILS SEE DETAIL B202.

NO.	DATE	BY	CHECK	DESIGN	REVISION / SUBMITTAL

DESIGNED BY: KR CHECKED BY: KJK
DRAWN BY: MSK CHECKED BY: KJK

AECOM Kimley»Horn

90% SUBMISSION - 01/22/16

METROPOLITAN COUNCIL

SOUTHWEST Green Line LRT Extension

CIVIL - VOLUME 4D
MINNEHAHA CREEK FREIGHT BRIDGE
BRIDGE R0688
WEST ABUTMENT DETAILS 1

DISCIPLINE: STRUCTURES
SHEET NAME: CBRR0688-BRG-ABT-001

SHEET 4 OF 45

Dec, 11 2015 09:45 am V:\3400_ADC\CAD\SEGMENT E2\PLAN SHEETS\STRUCTURES\R0688\CBRR0688-BRG-ABT-001.dwg By: kevin.kimm

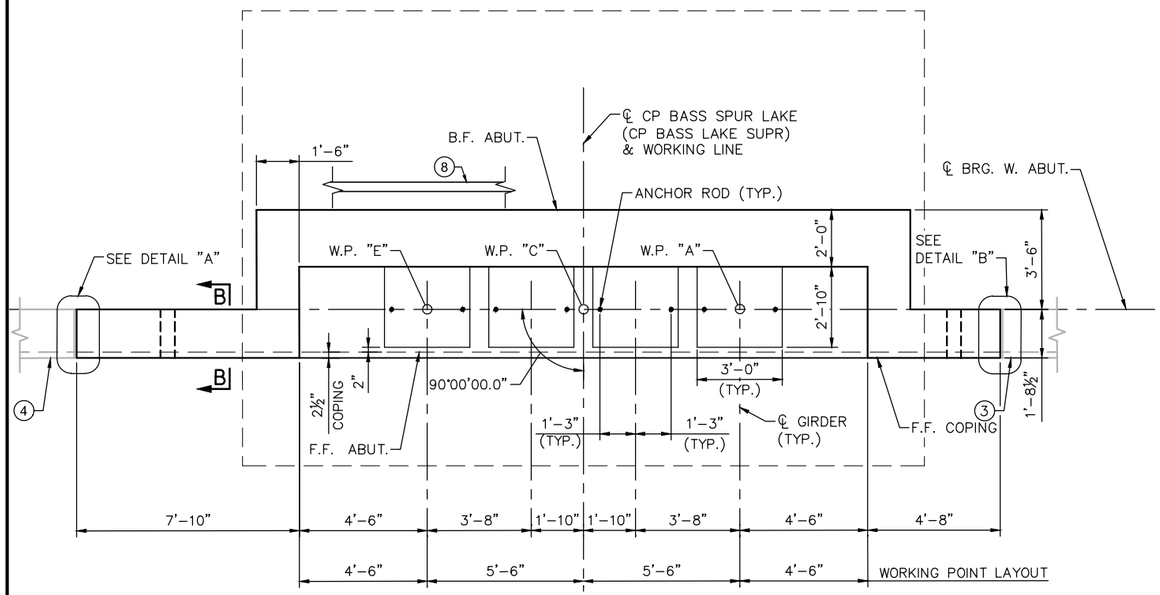

PLAN VIEW

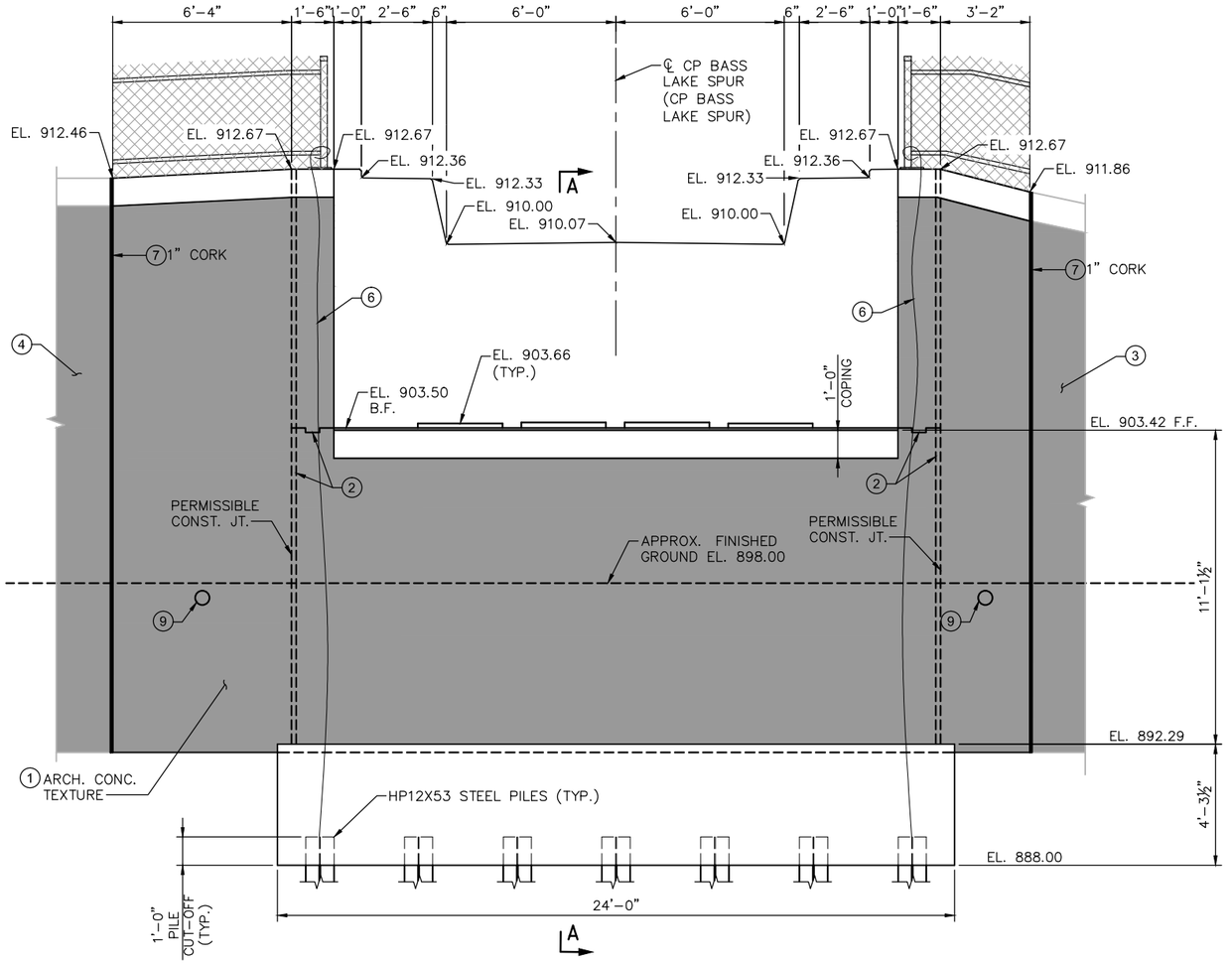

ELEVATION

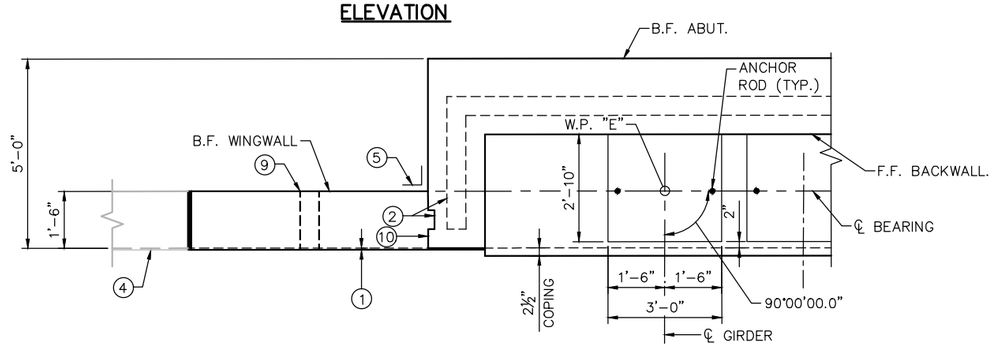

SOUTH WINGWALL PLAN VIEW

SECTION ABOVE BEARING SEAT

NOTES:

SEE SHEET 6 FOR SECTIONS A–A & B–B.

1. ARCHITECTURAL CONCRETE TEXTURE (STRIATED RELIEF) WITH ARCHITECTURAL SURFACE FINISH (SINGLE COLOR). THE APPROXIMATE THICKNESS OF ARCHITECTURAL CONCRETE IS 0.35".
2. 2"x6" KEY
3. BRIDGE NO. R0687 WINGWALL. SEE BRIDGE NO. R0687 PLANS FOR DETAILS.
4. BRIDGE NO. R0689 WINGWALL. SEE BRIDGE NO. R0689 PLANS FOR DETAILS.
5. MEMBRANE WATERPROOFING SYSTEM PER SPEC. 2481.3.B.
6. ATTACH WIRE FENCE ANCHORAGE TO PILE WITH SOLID NO. 6 GAGE COPPER WIRE WITH AN APPROVED TYPE CLAMP OR BRAZING (ONE ANCHORAGE PER END OF RAIL). GROUND BOTH SIDES OF EXPANSION JOINT PIPE SLEEVE IF PRESENT. PAINT EXPOSED WIRE GREY.
7. ELECTRICAL INSULATING CORK BARRIER. CONTRACTOR AND FIELD ENGINEER SHALL VERIFY WINGWALL CONCRETE IS SEPARATED AND CONSTRUCTIVE MATERIAL DOES NOT EXTEND THROUGH CORK.
8. 4" DIA. PERFORATED DRAIN PIPE. SEE DETAIL B910.
9. 6" DIA. PIPE SLEEVE FOR DRAIN PIPE. SEE DETAIL B910, SHEET 35. INVERT SLEEVE AT FRONT FACE OF ABUTMENT, EL. 897.22 WITH A MINIMUM SLOPE UP OF ⅛"/FT TO BACKFACE.
10. CONSTRUCTION JOINT. 72 HOUR TIME DELAY REQUIRED BETWEEN ADJACENT POURS TO ALLOW FOR SHRINKAGE.

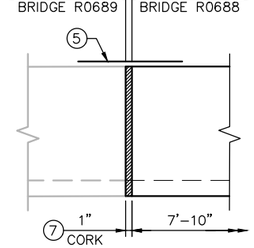

DETAIL "A"

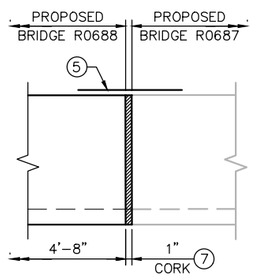

DETAIL "B"

NO.	DATE	BY	CHECK	DESIGN	REVISION / SUBMITTAL

DESIGNED BY: KR | CHECKED BY: KJK
DRAWN BY: MSK | CHECKED BY: KJK

AECOM Kimley»Horn

90% SUBMISSION - 01/22/16

METROPOLITAN COUNCIL

SOUTHWEST Green Line LRT Extension

CIVIL - VOLUME 4D
MINNEHAHA CREEK FREIGHT BRIDGE
BRIDGE R0688
WEST ABUTMENT DETAILS 2

DISCIPLINE: STRUCTURES
SHEET NAME: CBRR0688-BRG-ABT-002

SHEET 5 OF 45

Dec, 11 2015 09:46 am V:\3400_ADC\CAD\SEGMENT E2\PLAN SHEETS\STRUCTURES\R0688\CBRR0688-BRG-ABT-002.dwg By: kevin.kimm

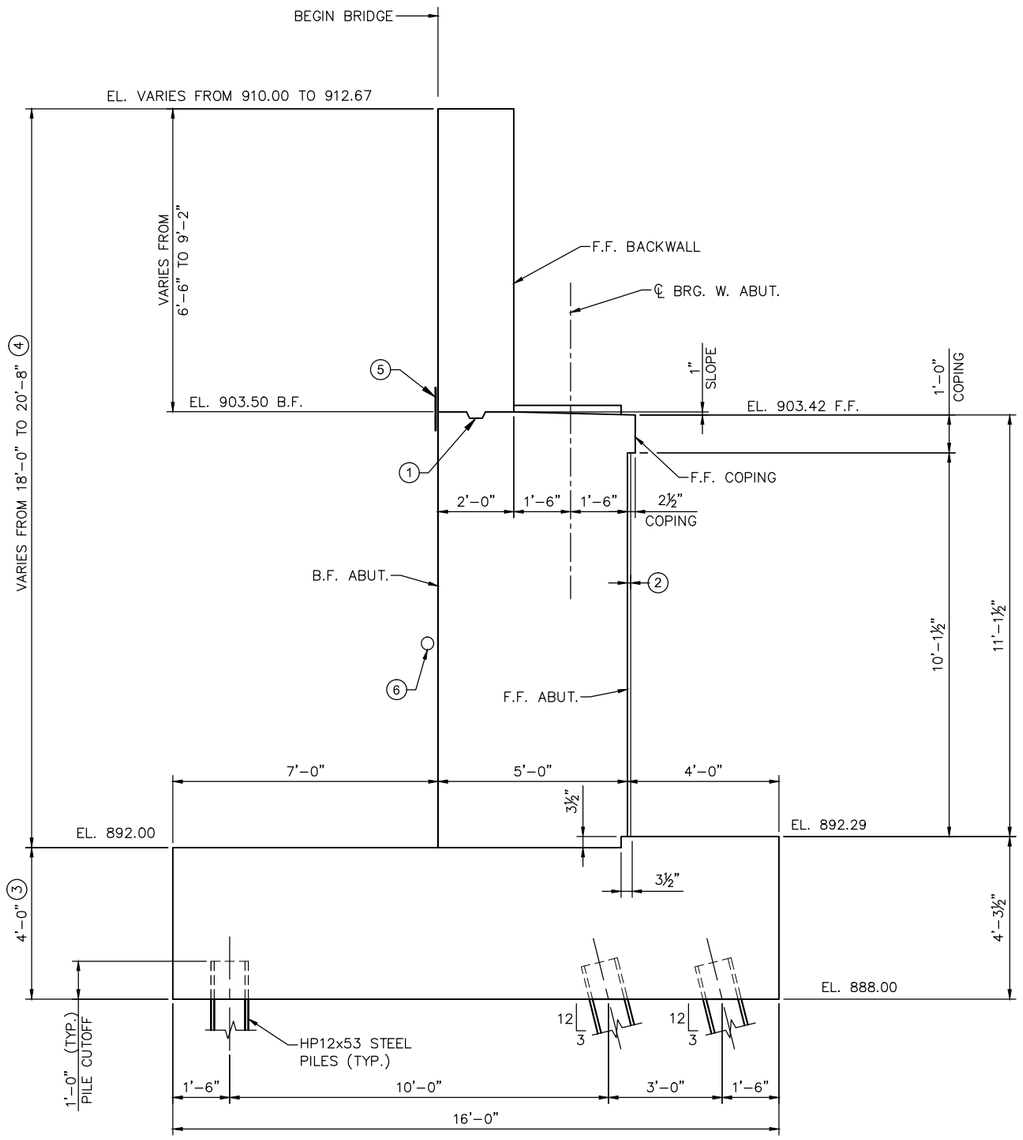

SECTION A–A

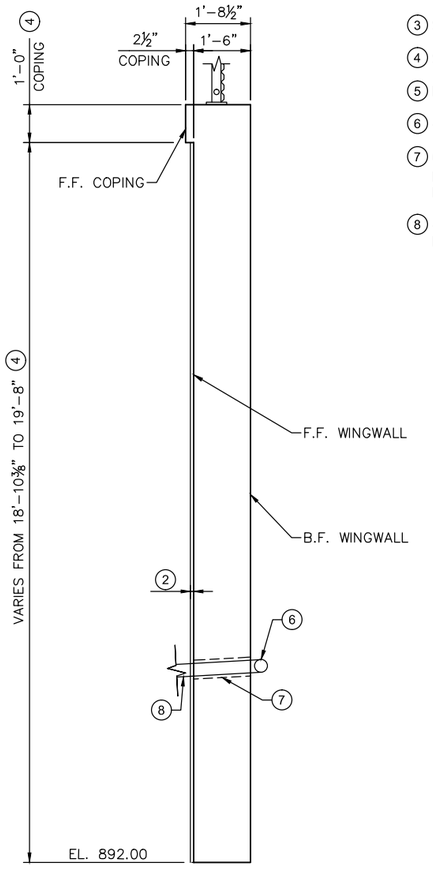

SECTION B–B

NOTES:

1. PERMISSIBLE CONSTRUCTION JOINT WITH 2"x6" KEY CENTERED IN WALL.
2. ARCHITECTURAL CONCRETE TEXTURE (STRIATED RELIEF) WITH ARCHITECTURAL SURFACE FINISH (SINGLE COLOR). THE APPROXIMATE THICKNESS OF ARCHITECTURAL CONCRETE IS 0.35".
3. STRUCTURAL CONCRETE (1G52).
4. STRUCTURAL CONCRETE (3B52).
5. MEMBRANE WATERPROOFING SYSTEM PER SPEC. 2481.3.B.
6. 4" DIA. PERFORATED DRAIN PIPE. SEE DETAIL B910, SEE SHEET 35.
7. 6" DIA. PIPE SLEEVE FOR DRAIN PIPE. SEE DETAIL B910, SHEET 35. INVERT SLEEVE AT FRONT FACE OF WINGWALL, EL. 897.22 WITH A MINIMUM SLOPE UP OF ⅛"/FT TO BACKFACE.
8. 4" DIA. NON–PERFORATED DRAIN PIPE. DAYLIGHT END OF PIPE IN SLOPE. SEE DETAIL B910, SEE SHEET 35.

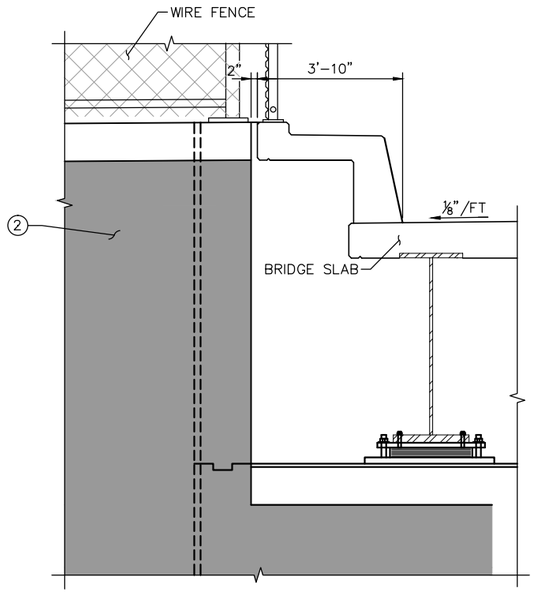

SOUTH CORNER ELEVATION VIEW
NORTH CORNER SIMILAR

NO.	DATE	BY	CHECK	DESIGN	REVISION / SUBMITTAL

DESIGNED BY: KR | CHECKED BY: KJK
DRAWN BY: MSK | CHECKED BY: KJK

AECOM Kimley»Horn

90% SUBMISSION - 01/22/16

METROPOLITAN COUNCIL

SOUTHWEST Green Line LRT Extension

CIVIL - VOLUME 4D
MINNEHAHA CREEK FREIGHT BRIDGE
BRIDGE R0688
WEST ABUTMENT DETAILS 3

DISCIPLINE: STRUCTURES
SHEET NAME: CBRR0688-BRG-ABT-003

SHEET 6 OF 45

Dec, 11 2015 09:46 am V:\3400_ADC\CAD\SEGMENT E2\PLAN SHEETS\STRUCTURES\R0688\CBRR0688-BRG-ABT-003.dwg By: kevin.kimm

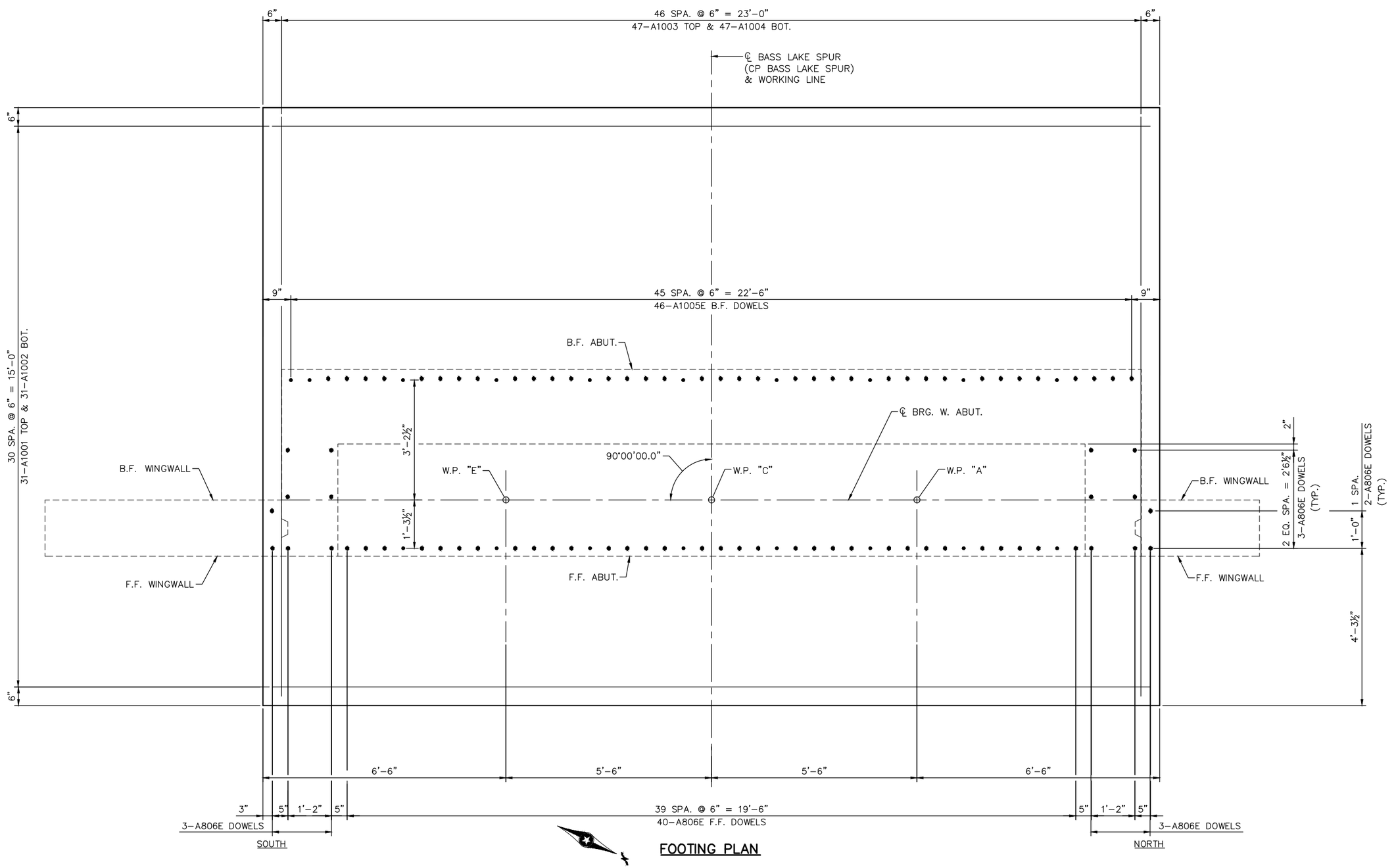

FOOTING PLAN

NO.	DATE	BY	CHECK	DESIGN	REVISION / SUBMITTAL

DESIGNED BY: KR | CHECKED BY: KJK
DRAWN BY: MSK | CHECKED BY: KJK

AECOM Kimley»Horn

90% SUBMISSION - 01/22/16

METROPOLITAN COUNCIL

SOUTHWEST Green Line LRT Extension

CIVIL - VOLUME 4D
MINNEHAHA CREEK FREIGHT BRIDGE
BRIDGE R0688
WEST ABUTMENT REINFORCEMENT 1

DISCIPLINE: STRUCTURES
SHEET NAME: CBRR0688-BRG-ABT-004-1

SHEET 7 OF 45

Dec, 11 2015 09:47 am V:\3400_ADC\CAD\SEGMENT E2\PLAN SHEETS\STRUCTURES\R0688\CBRR0688-BRG-ABT-004.dwg By: kevin.kimm

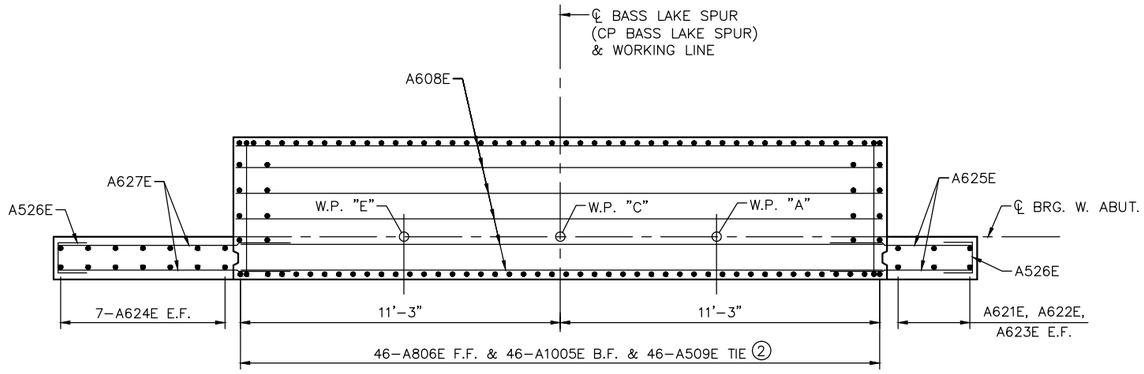

SECTION D–D

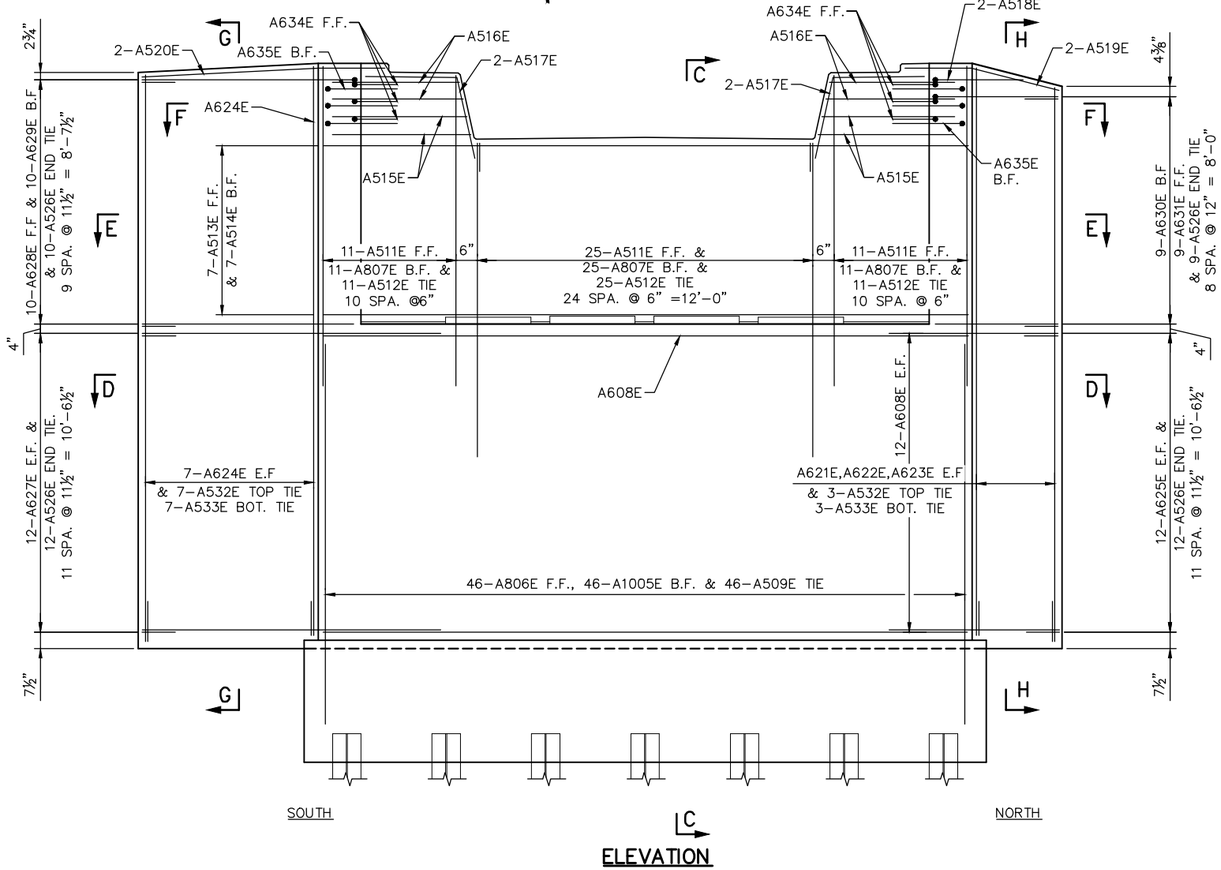

ELEVATION

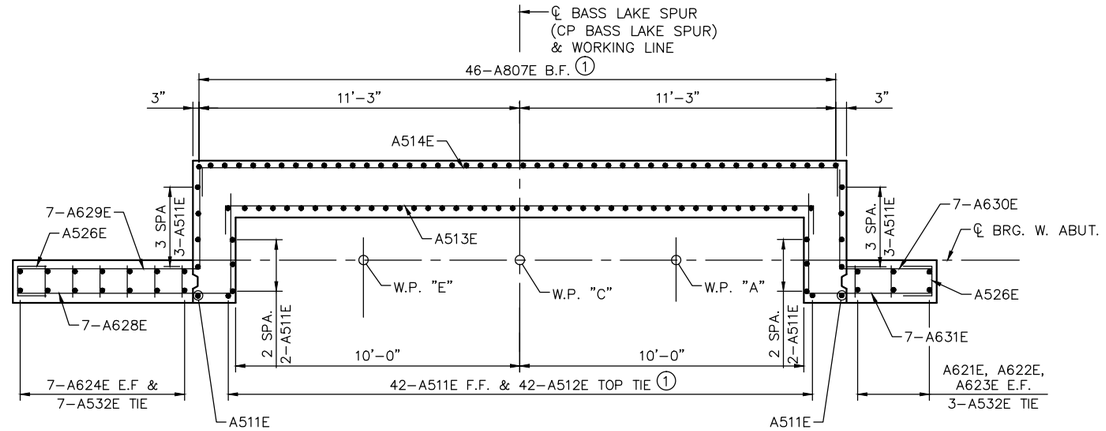

SECTION E–E

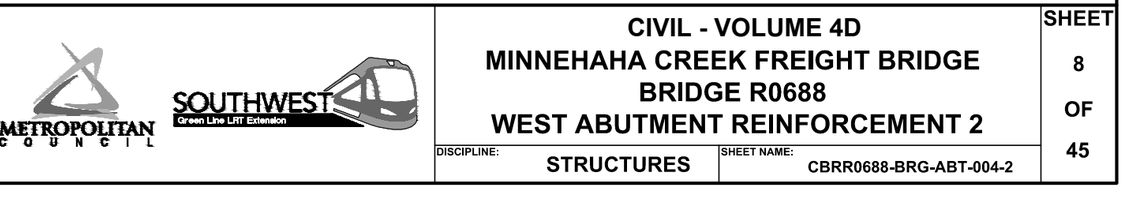

SECTION F–F

NOTES:

SEE SHEET 9 FOR SECTIONS C–C, G–G & H–H.

① SPACE WITH DOWEL BARS.

② SEE FOOTING PLAN ON SHEET 7 FOR BAR LAYOUT.

NO.	DATE	BY	CHECK	DESIGN	REVISION / SUBMITTAL

DESIGNED BY: KR | CHECKED BY: KJK
DRAWN BY: MSK | CHECKED BY: KJK

AECOM Kimley»Horn

90% SUBMISSION - 01/22/16

METROPOLITAN COUNCIL

SOUTHWEST Green Line LRT Extension

CIVIL - VOLUME 4D
MINNEHAHA CREEK FREIGHT BRIDGE
BRIDGE R0688
WEST ABUTMENT REINFORCEMENT 2

DISCIPLINE: STRUCTURES
SHEET NAME: CBRR0688-BRG-ABT-004-2

SHEET 8 OF 45

Dec, 11 2015 09:48 am V:\3400_ADC\CAD\SEGMENT E2\PLAN SHEETS\STRUCTURES\R0688\CBRR0688-BRG-ABT-004.dwg By: kevin.kimm

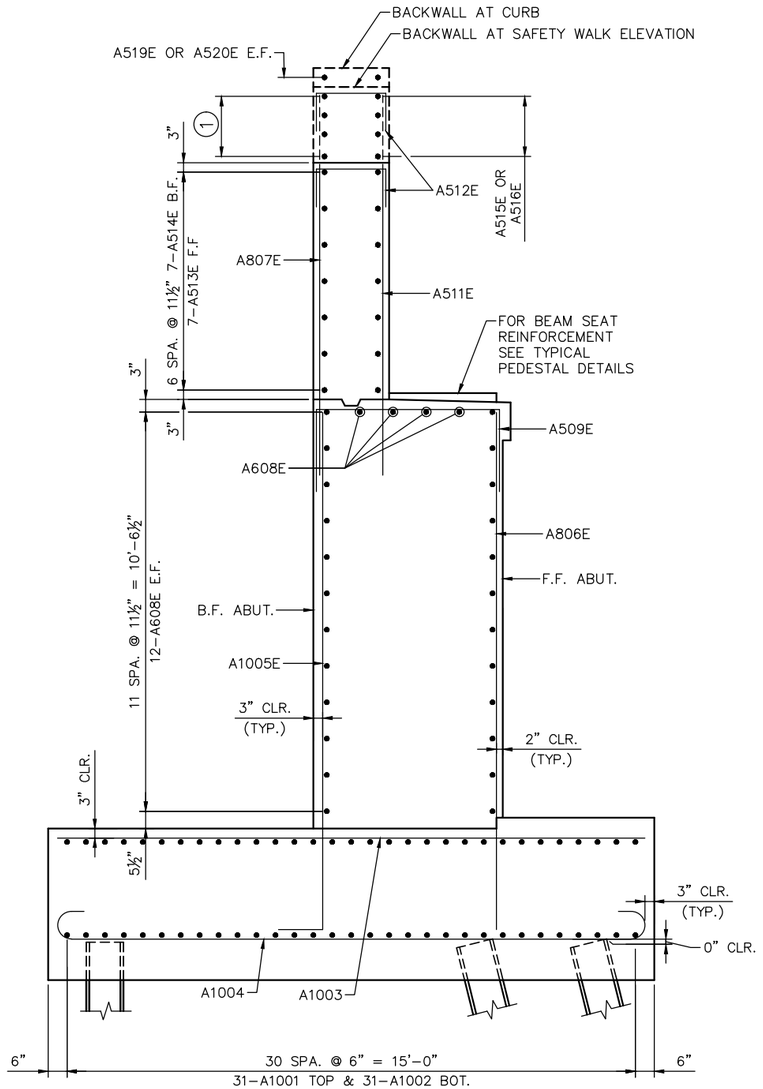

SECTION C-C

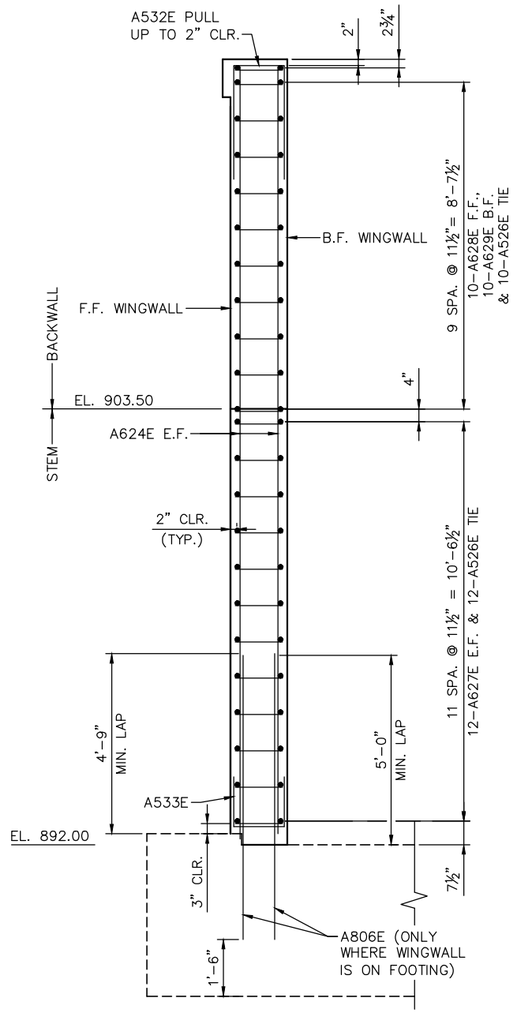

SECTION G-G

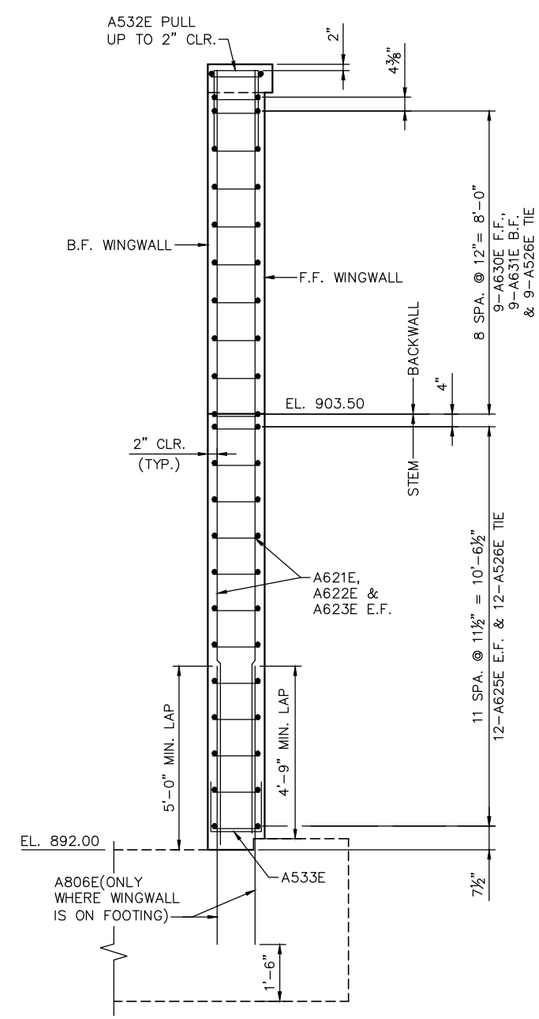

SECTION H-H

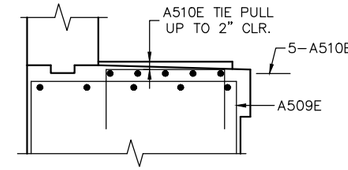

TYPICAL PEDESTAL SECTION

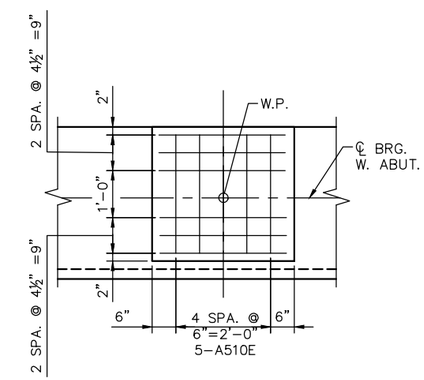

TYPICAL PEDESTAL PLAN

NOTES:

1 3 SPA. @ 8" = 2'-0"

NO.	DATE	BY	CHECK	DESIGN	REVISION / SUBMITTAL

DESIGNED BY: KR CHECKED BY: KJK
DRAWN BY: MSK CHECKED BY: KJK

AECOM Kimley»Horn

90% SUBMISSION - 01/22/16

METROPOLITAN COUNCIL

SOUTHWEST Green Line LRT Extension

CIVIL - VOLUME 4D
MINNEHAHA CREEK FREIGHT BRIDGE
BRIDGE R0688
WEST ABUTMENT REINFORCEMENT 3

DISCIPLINE: STRUCTURES

SHEET NAME: CBRR0688-BRG-ABT-004-3

SHEET 9 OF 45

Dec, 11 2015 09:48 am V:\3400_ADC\CAD\SEGMENT E2\PLAN SHEETS\STRUCTURES\R0688\CBRR0688-BRG-ABT-004.dwg By: kevin.kimm

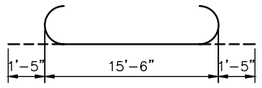

A1004

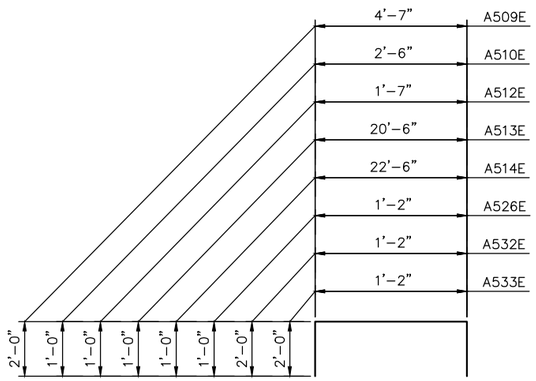

A509E, A510E, A512E, A513E, A514E, A526E, A532E & A533E

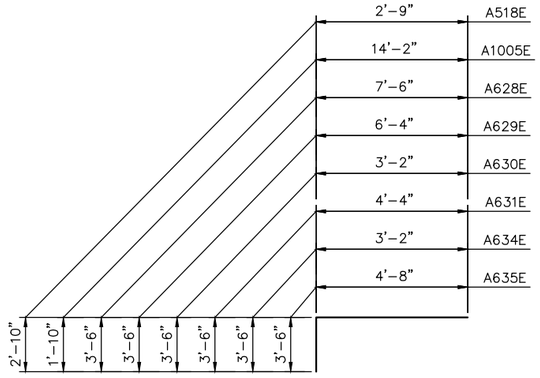

A518E, A1005E, A628E, A629E, A630E, A631E, A634E & A635E

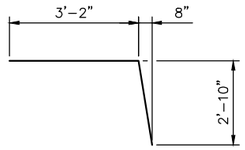

A517E

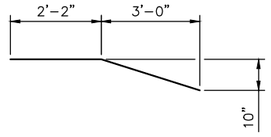

A519E

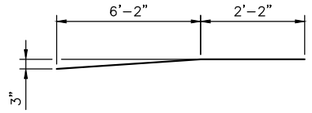

A520E

BILL OF REINFORCEMENT FOR WEST ABUTMENT

BAR	NO.	LENGTH	SHAPE	LOCATION
A1001	31	23'-6"	STR.	FOOTING,LONG. TOP
A1002	31	23'-6"	STR.	FOOTING,LONG. BOT.
A1003	47	15'-6"	STR.	FOOTING,TRANS. TOP
A1004	47	18'-10"	BENT	BOOTING,TRANS. BOT.
A1005E	46	16'-0"	BENT	FOOTING,B.F.DOWEL
A806E	56	14'-2"	STR.	FOOTING,F.F.DOWELL
A807E	47	11'-6"	STR.	STEM,VERT.B.F.
A608E	28	22'-8"	STR.	STEM,LONG.
A509E	46	8'-7"	BENT	STEM,TOP TIE
A510E	44	4'-6"	BENT	PEDESTAL, TIE
A511E	60	10'-3"	STR.	BACKWALL,VERT.F.F.
A512E	47	3'-7"	BENT	BACKWALL,TOP TIE
A513E	7	22'-6"	BENT	BACKWALL,HORIZ.F.F.
A514E	7	24'-6"	BENT	BACKWALL,HORIZ.B.F.
A515E	8	5'-0"	STR.	BACKWALL SWLK E.F.
A516E	8	5'-0"	STR.	BACKWALL SWLK E.F.
A517E	4	6'-1"	BENT	BACKWALL SWLK TO BOT. E.F.
A518E	2	5'-7"	BENT	WINGWALL HORIZ. E.F.
A519E	2	5'-4"	BENT	HORIZ. TOP BACKWALL E.F.
A520E	2	8'-4"	BENT	HORIZ. TOP BACKWALL E.F.
A621E	2	20'-4"	STR.	WINGWALL VERT. E.F. (VAR.)
A622E	2	19'-11"	STR.	WINGWALL VERT. E.F. (VAR.)
A623E	2	19'-5"	STR.	WINGWALL VERT. E.F. (VAR.)
A624E	14	20'-3"	STR.	WINGWALL VERT. E.F.
A625E	24	6'-8"	STR.	WINGWALL HORIZ. E.F.
A526E	43	3'-2"	BENT	WINGWALL END TIE
A627E	24	9'-10"	STR.	WINGWALL HORIZ. E.F.
A628E	10	11'-0"	BENT	WINGWALL HORIZ. F.F
A629E	10	9'-10"	BENT	WINGWALL HORIZ. B.F.
A630E	9	6'-8"	BENT	WINGWALL HORIZ. B.F.
A631E	9	7'-10"	BENT	WINGWALL HORIZ. F.F.
A532E	10	5'-2"	BENT	WINGWALL TOP TIE
A533E	10	5'-2"	BENT	WINGWALL BOT. TIE
A634E	6	6'-8"	BENT	WINGWALL HORIZ. SWALK
A635E	6	8'-2"	BENT	WINGWALL HORIZ. SWALK

NO.	DATE	BY	CHECK	DESIGN	REVISION / SUBMITTAL

DESIGNED BY: KR | CHECKED BY: KJK
DRAWN BY: MSK | CHECKED BY: KJK

AECOM Kimley»Horn

90% SUBMISSION - 01/22/16

METROPOLITAN COUNCIL

SOUTHWEST Green Line LRT Extension

CIVIL - VOLUME 4D
MINNEHAHA CREEK FREIGHT BRIDGE
BRIDGE R0688
WEST ABUTMENT REINFORCEMENT 4

DISCIPLINE: STRUCTURES
SHEET NAME: CBRR0688-BRG-ABT-004-4

SHEET 10 OF 45

Dec, 11 2015 09:48 am V:\3400_ADC\CAD\SEGMENT E2\PLAN SHEETS\STRUCTURES\R0688\CBRR0688-BRG-ABT-004.dwg By: kevin.kimm

EAST ABUTMENT COMPUTED PILE LOAD - TONS/PILE	
DEAD LOAD + EARTH PRESSURE	32
LIVE LOAD	29
* DESIGN LOAD	61
* BASED ON GROUP VI LOADING (SERVICE LOAD) PER AREMA CHAPTER 8 SECTION 2.2.4	

REQUIRED PILE TEST LOAD	
FIELD CONTROL METHOD	TEST LOAD
PDA	122

GENERAL PILE NOTES

1 HP12x53 STEEL TEST PILES 75 FT. LONG
17 HP12x53 STEEL PILES EST. 75 FT. LENGTH
18 HP12x53 STEEL PILES REQ'D FOR EAST ABUT.

ALL PILES TO BE HP12x53 WITH PILE TIP PROTECTION.

PILE SPACING SHOWN IS AT BOTTOM OF FOOTING.

PILES MARKED THUS ⊥ TO BE BATTERED 3" PER FOOT IN DIRECTION SHOWN.

FOR PILE SPLICE DETAILS SEE DETAIL B202.

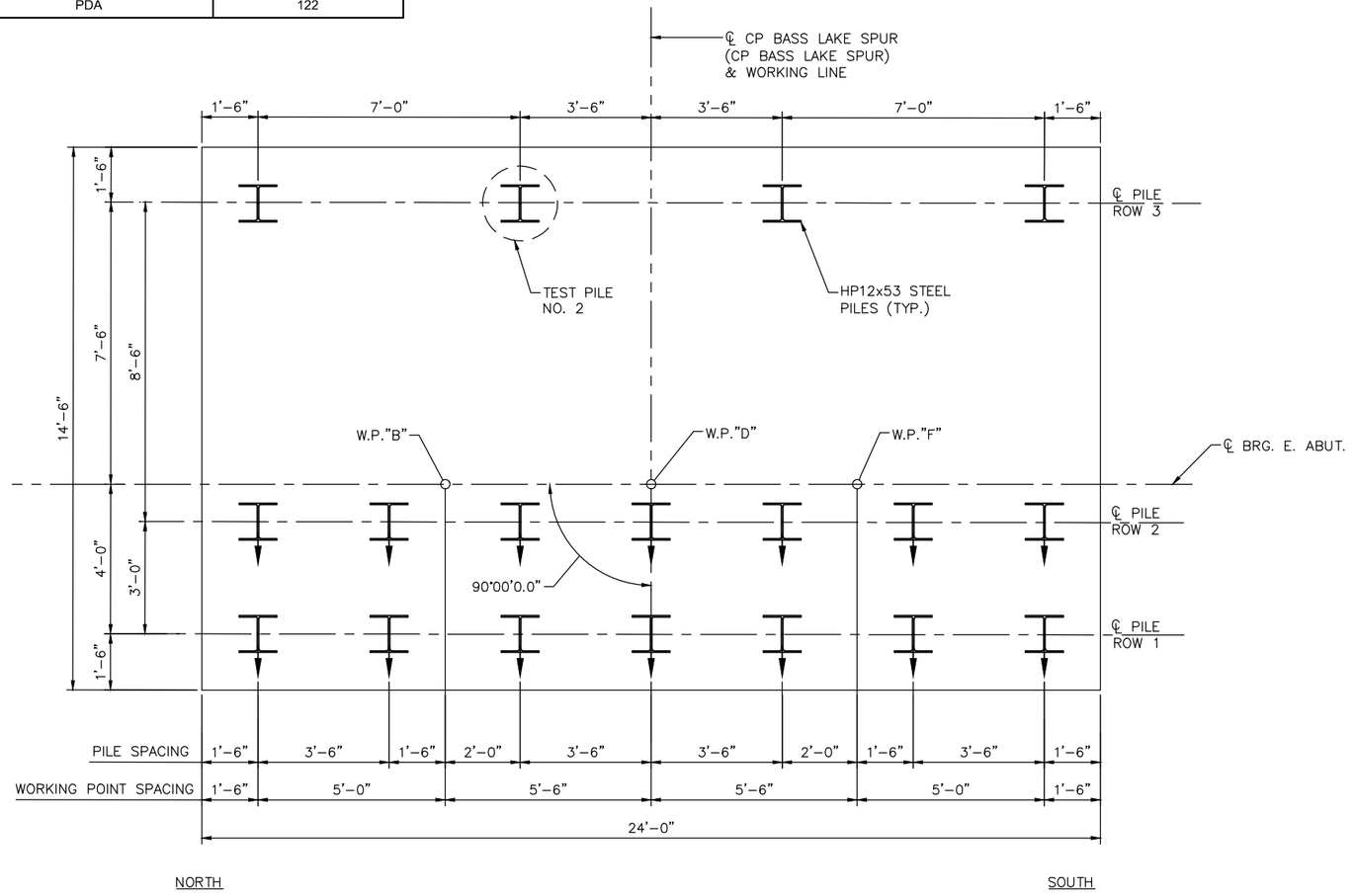

FOOTING LAYOUT

NO.	DATE	BY	CHECK	DESIGN	REVISION / SUBMITTAL

DESIGNED BY: KR CHECKED BY: KJK
DRAWN BY: MSK CHECKED BY: KJK

AECOM Kimley»Horn

90% SUBMISSION - 01/22/16

METROPOLITAN COUNCIL

SOUTHWEST Green Line LRT Extension

CIVIL - VOLUME 4D
MINNEHAHA CREEK FREIGHT BRIDGE
BRIDGE R0688
EAST ABUTMENT DETAILS 1

DISCIPLINE: STRUCTURES
SHEET NAME: CBRR0688-BRG-ABT-011

SHEET 11 OF 45

Dec, 11 2015 09:49 am V:\3400_ADC\CAD\SEGMENT E2\PLAN SHEETS\STRUCTURES\R0688\CBRR0688-BRG-ABT-011.dwg By: kevin.kimm

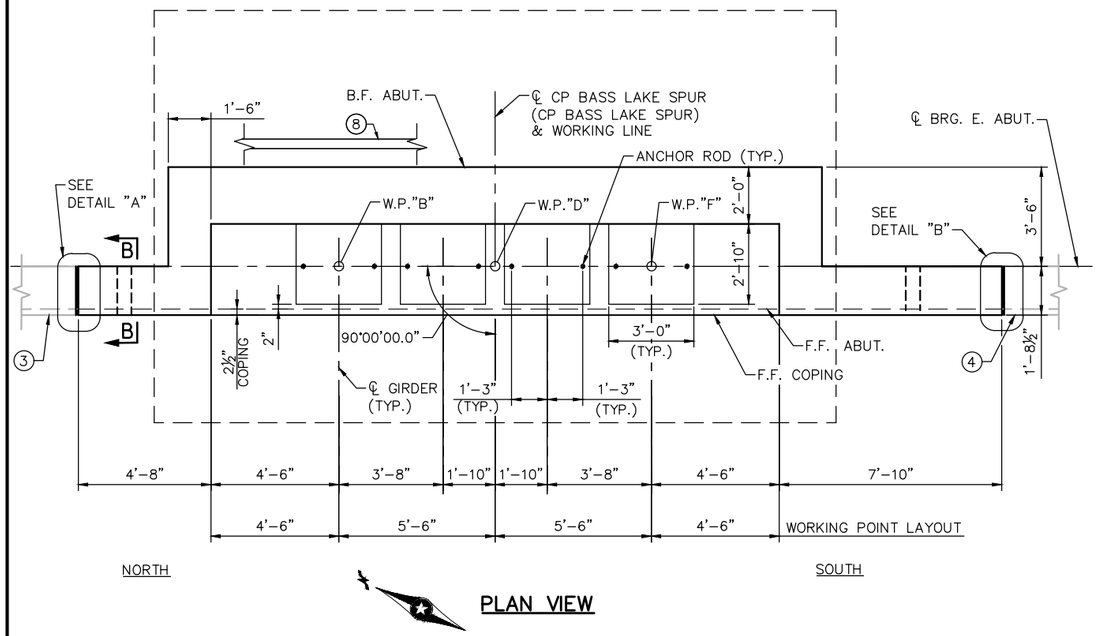

PLAN VIEW

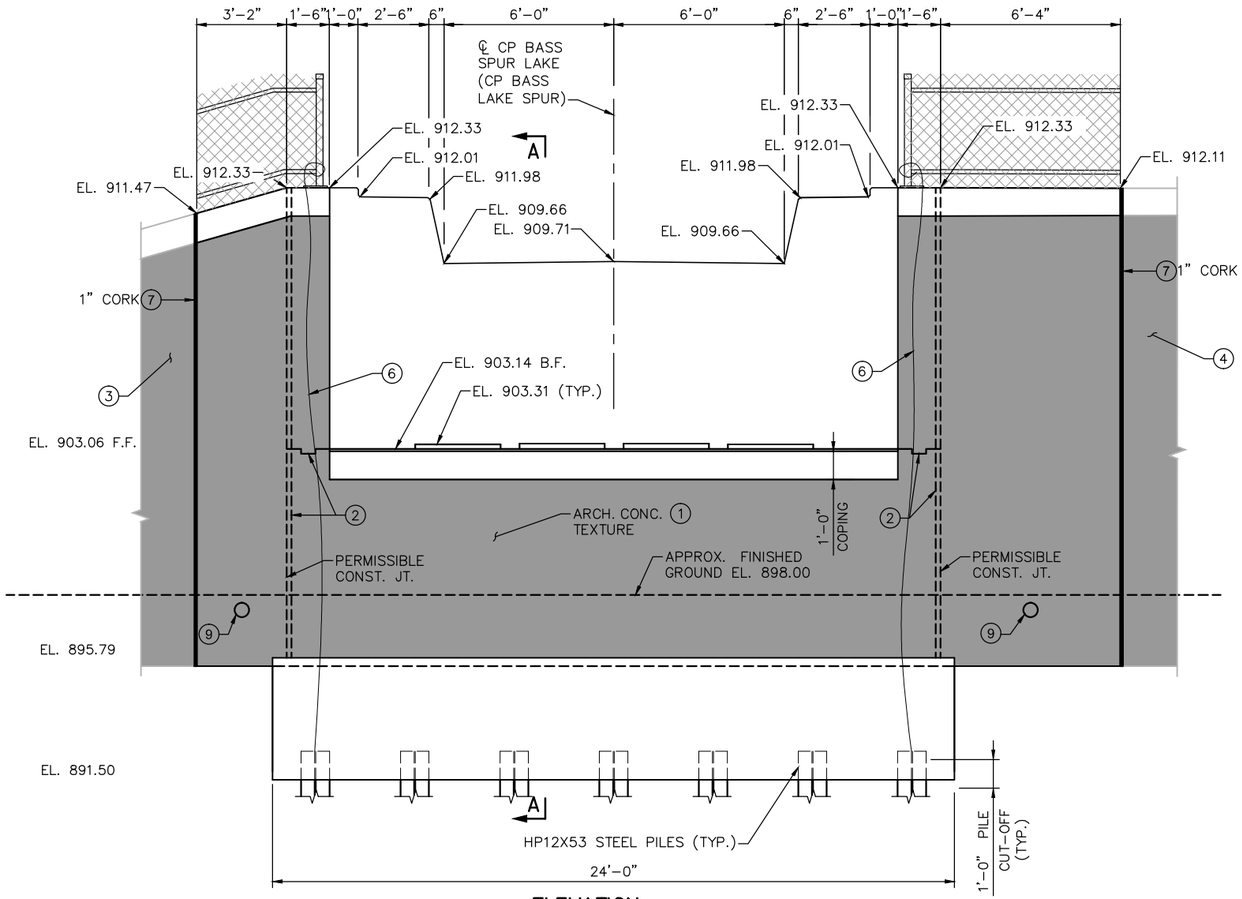

ELEVATION

NOTES:

SEE SHEET 13 FOR SECTIONS A–A & B–B.

1. ARCHITECTURAL CONCRETE TEXTURE (STRIATED RELIEF) WITH ARCHITECTURAL SURFACE FINISH (SINGLE COLOR). THE APPROXIMATE THICKNESS OF ARCHITECTURAL CONCRETE IS 0.35".
2. 2"x6" KEY
3. BRIDGE NO. R0687 WINGWALL. SEE BRIDGE NO. R0687 PLANS FOR DETAILS.
4. BRIDGE NO. R0689 WINGWALL. SEE BRIDGE NO. R0689 PLANS FOR DETAILS.
5. MEMBRANE WATERPROOFING SYSTEM PER SPEC. 2481.3.B.
6. ATTACH WIRE FENCE ANCHORAGE TO PILE WITH SOLID NO. 6 GAGE COPPER WIRE WITH AN APPROVED TYPE CLAMP OR BRAZING (ONE ANCHORAGE PER END OF RAIL). GROUND BOTH SIDES OF EXPANSION JOINT PIPE SLEEVE IF PRESENT. PAINT EXPOSED WIRE GRAY.
7. ELECTRICAL INSULATING CORK BARRIER. CONTRACTOR AND FIELD ENGINEER SHALL VERIFY WINGWALL CONCRETE IS SEPARATED AND CONSTRUCTIVE MATERIAL DOES NOT EXTEND THROUGH CORK.
8. 4" DIA. PERFORATED DRAIN PIPE. SEE DETAIL B910.
9. 6" DIA. PIPE SLEEVE FOR DRAIN PIPE. SEE DETAIL B910, SHEET 35. INVERT SLEEVE AT FRONT FACE OF ABUTMENT, EL. 897.22 WITH A MINIMUM SLOPE UP OF ⅛"/FT TO BACKFACE.
10. CONSTRUCTION JOINT. 72 HOUR TIME DELAY REQUIRED BETWEEN ADJACENT POURS TO ALLOW FOR SHRINKAGE.

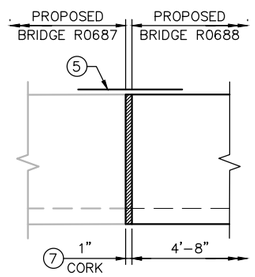

DETAIL "A"

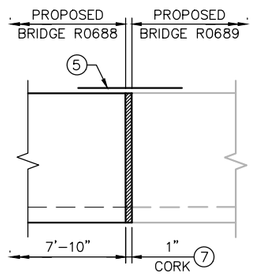

DETAIL "B"

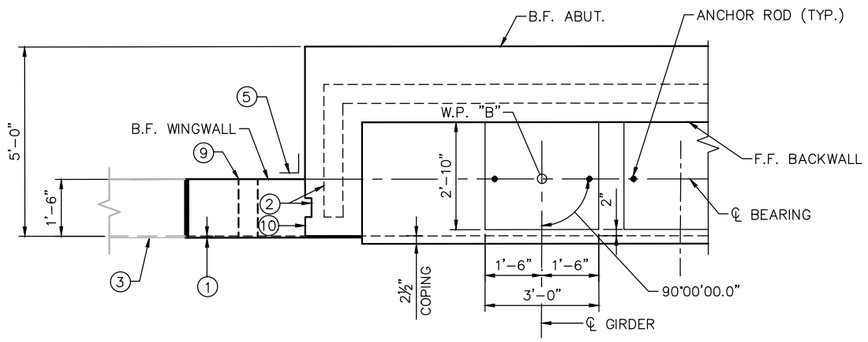

NORTH WINGWALL PLAN VIEW

SECTION ABOVE BEARING SEAT

NO.	DATE	BY	CHECK	DESIGN	REVISION / SUBMITTAL

DESIGNED BY: KR | CHECKED BY: KJK
DRAWN BY: MSK | CHECKED BY: KJK

AECOM Kimley»Horn

90% SUBMISSION - 01/22/16

METROPOLITAN COUNCIL

SOUTHWEST Green Line LRT Extension

CIVIL - VOLUME 4D
MINNEHAHA CREEK FREIGHT BRIDGE
BRIDGE R0688
EAST ABUTMENT DETAILS 2

DISCIPLINE: STRUCTURES
SHEET NAME: CBRR0688-BRG-ABT-012

SHEET 12 OF 45

Dec, 11 2015 09:50 am V:\3400_ADC\CAD\SEGMENT E2\PLAN SHEETS\STRUCTURES\R0688\CBRR0688-BRG-ABT-012.dwg By: kevin.kimm

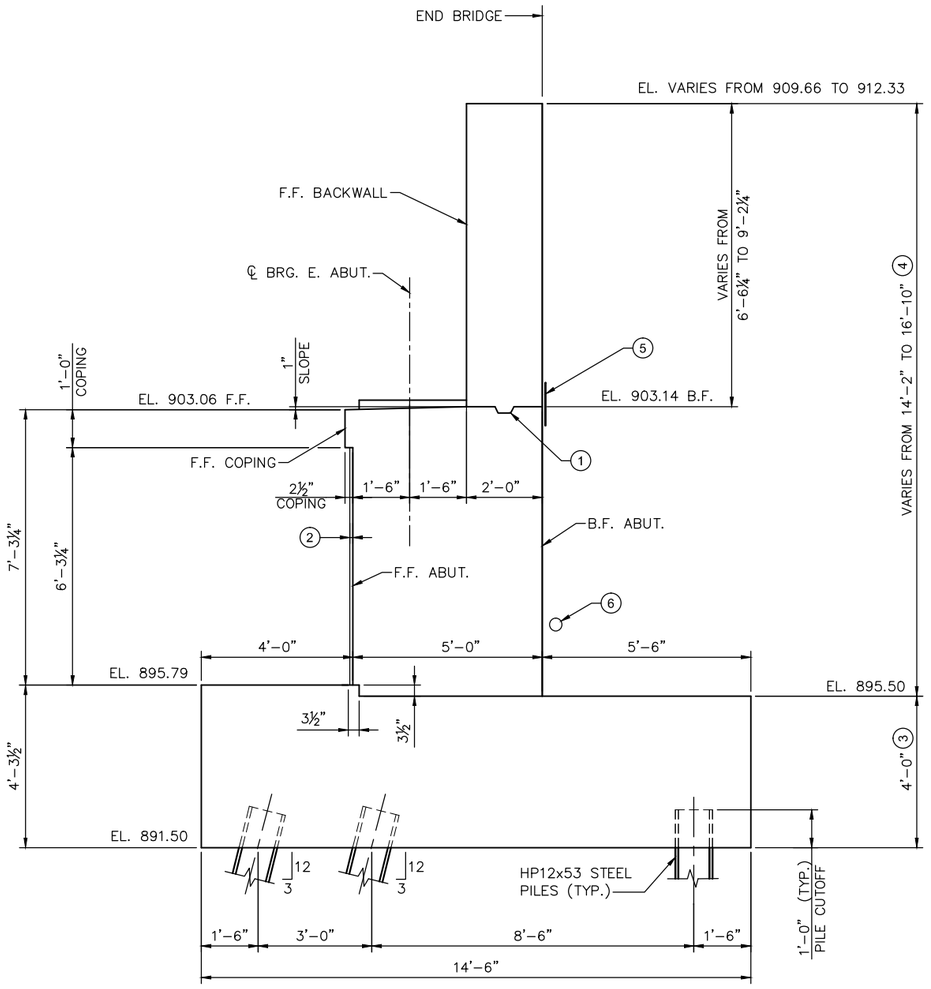

SECTION A–A

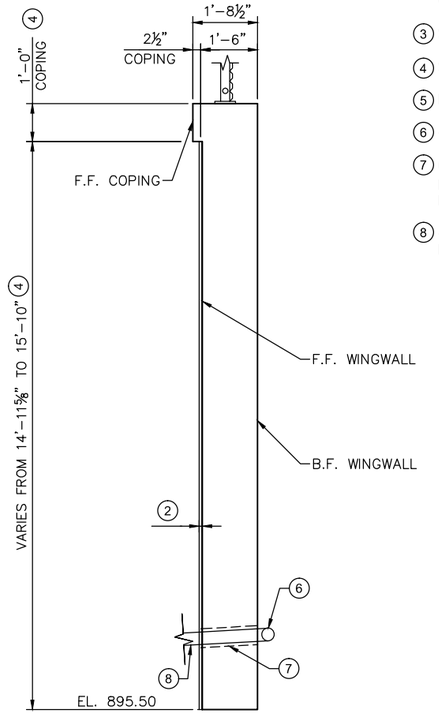

SECTION B–B

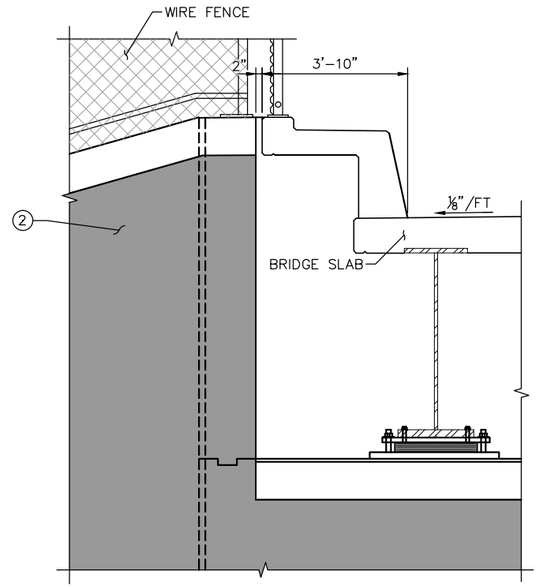

NORTH CORNER ELEVATION VIEW

SOUTH CORNER SIMILAR

NOTES:

1. PERMISSIBLE CONSTRUCTION JOINT WITH 2"x6" KEY CENTERED IN WALL.
2. ARCHITECTURAL CONCRETE TEXTURE (STRIATED RELIEF) WITH ARCHITECTURAL SURFACE FINISH (SINGLE COLOR). THE APPROXIMATE THICKNESS OF ARCHITECTURAL CONCRETE IS 0.35".
3. STRUCTURAL CONCRETE (1G52).
4. STRUCTURAL CONCRETE (3B52).
5. MEMBRANE WATERPROOFING SYSTEM PER SPEC. 2481.3.B.
6. 4" DIA. PERFORATED DRAIN PIPE. SEE DETAIL B910, SEE SHEET 35.
7. 6" DIA. PIPE SLEEVE FOR DRAIN PIPE. SEE DETAIL B910, SHEET 35. INVERT SLEEVE AT FRONT FACE OF WINGWALL, EL. 897.22 WITH A MINIMUM SLOPE UP OF ⅛"/FT TO BACKFACE.
8. 4" DIA. NON–PERFORATED DRAIN PIPE. DAYLIGHT END OF PIPE IN SLOPE. SEE DETAIL B910, SEE SHEET 35.

NO.	DATE	BY	CHECK	DESIGN	REVISION / SUBMITTAL

DESIGNED BY: KR | CHECKED BY: KJK
DRAWN BY: MSK | CHECKED BY: KJK

AECOM Kimley»Horn

90% SUBMISSION - 01/22/16

METROPOLITAN COUNCIL

SOUTHWEST Green Line LRT Extension

CIVIL - VOLUME 4D
MINNEHAHA CREEK FREIGHT BRIDGE
BRIDGE R0688
EAST ABUTMENT DETAILS 3

DISCIPLINE: STRUCTURES
SHEET NAME: CBRR0688-BRG-ABT-013

SHEET 13 OF 45

Dec, 11 2015 09:50 am V:\3400_ADC\CAD\SEGMENT E2\PLAN SHEETS\STRUCTURES\R0688\CBRR0688-BRG-ABT-013.dwg By: kevin.kimm

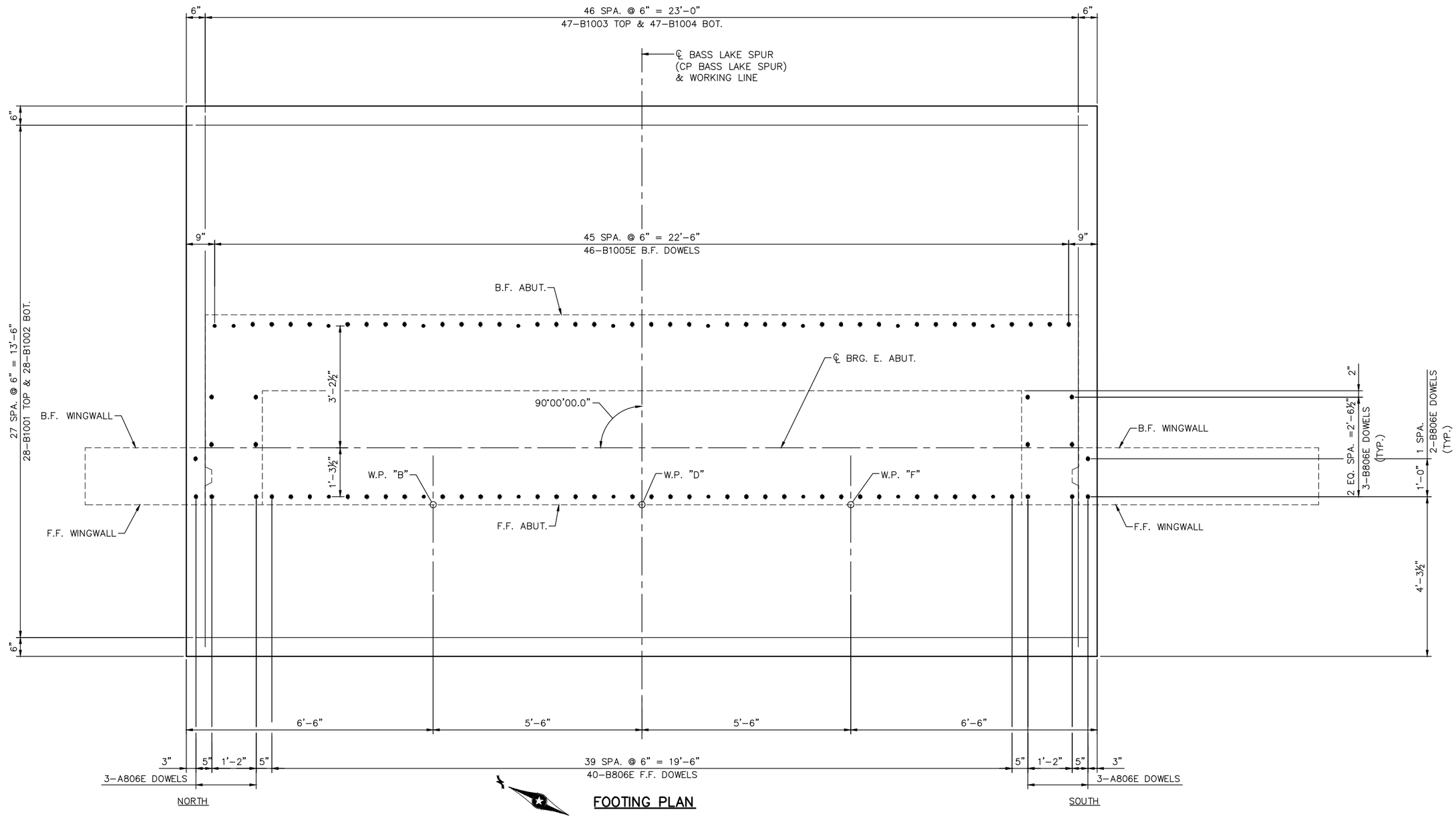

FOOTING PLAN

NO.	DATE	BY	CHECK	DESIGN	REVISION / SUBMITTAL

DESIGNED BY: KR | CHECKED BY: KJK
DRAWN BY: MSK | CHECKED BY: KJK

AECOM Kimley»Horn

90% SUBMISSION - 01/22/16

METROPOLITAN COUNCIL

SOUTHWEST Green Line LRT Extension

CIVIL - VOLUME 4D
MINNEHAHA CREEK FREIGHT BRIDGE
BRIDGE R0688
EAST ABUTMENT REINFORCEMENT 1

DISCIPLINE: STRUCTURES
SHEET NAME: CBRR0688-BRG-ABT-014-1

SHEET 14 OF 45

Dec, 11 2015 09:51 am V:\3400_ADC\CAD\SEGMENT E2\PLAN SHEETS\STRUCTURES\R0688\CBRR0688-BRG-ABT-014.dwg By: kevin.kimm

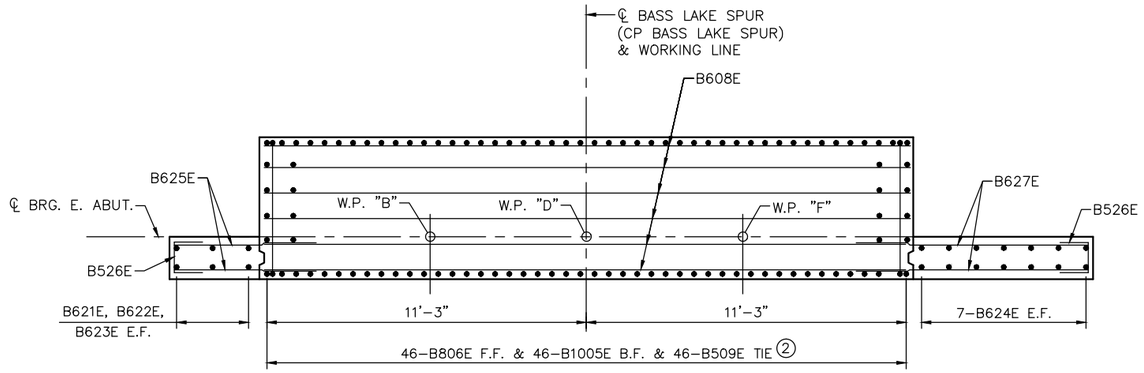

SECTION D-D

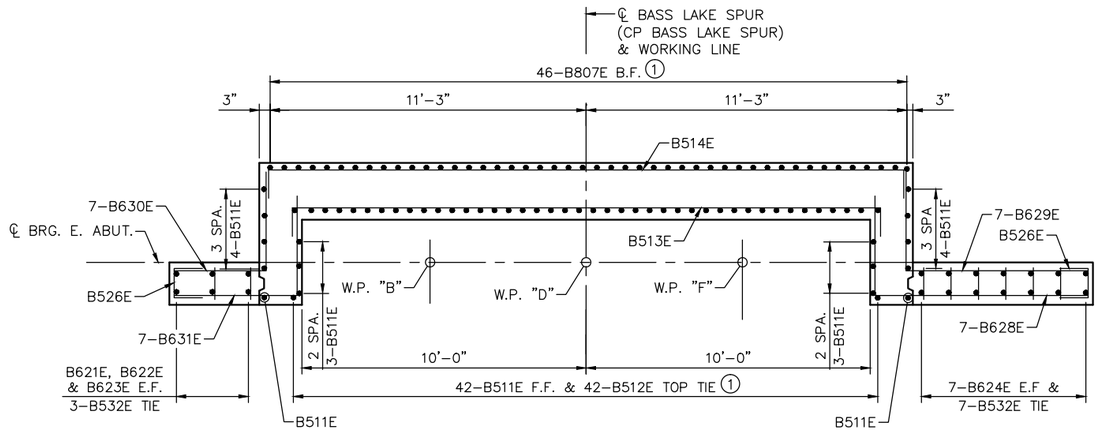

SECTION E-E

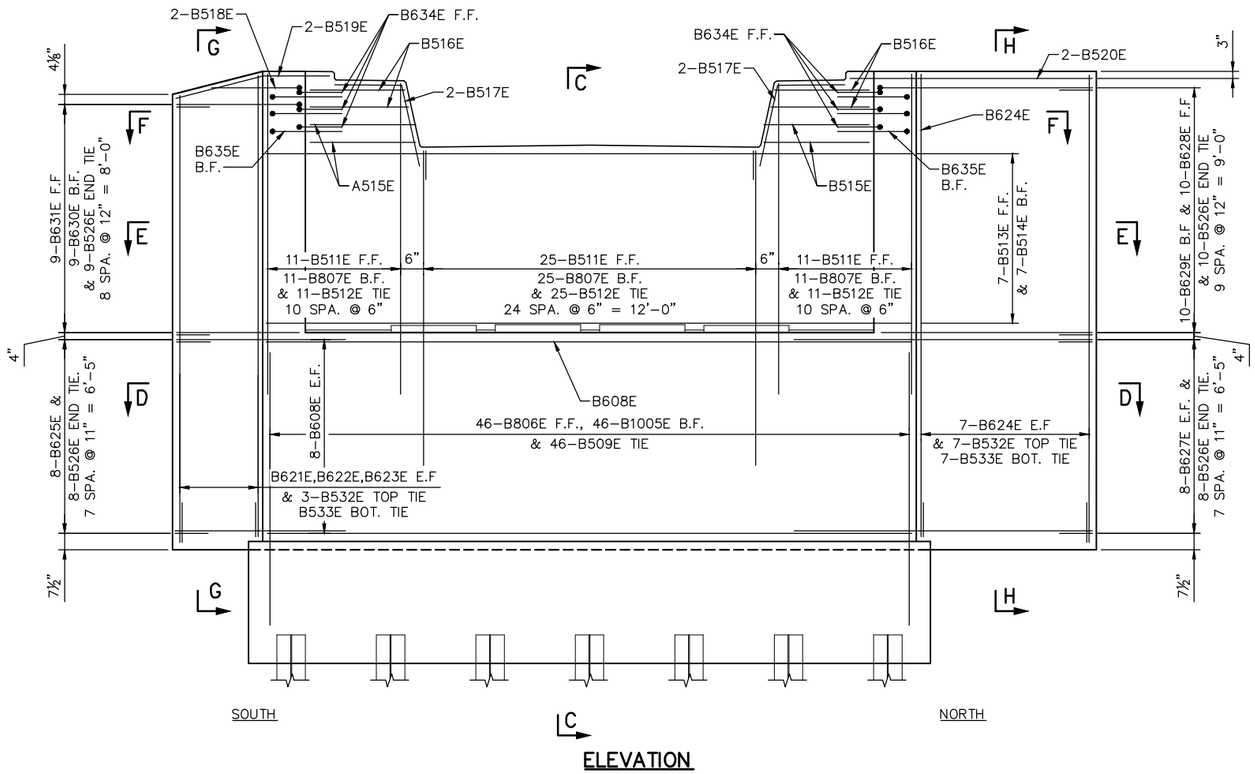

ELEVATION

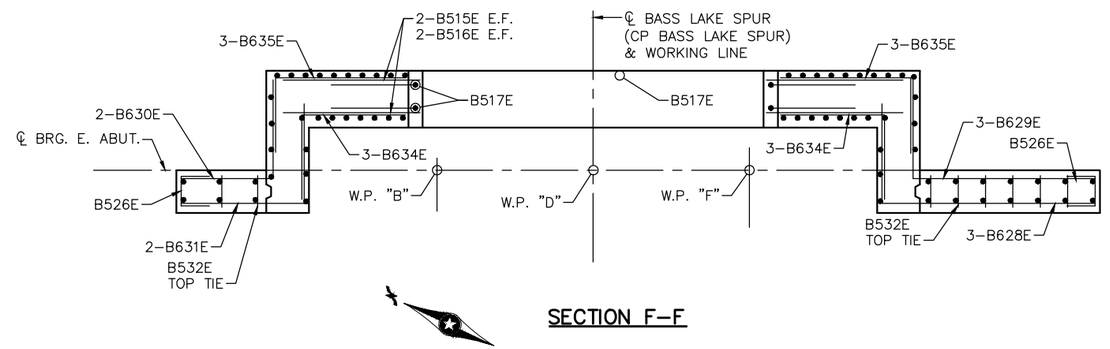

SECTION F-F

NOTES:

SEE SHEET 16 FOR SECTIONS C-C, G-G & H-H.

① SPACE WITH DOWEL BARS.

② SEE FOOTING PLAN ON SHEET 14 FOR BAR LAYOUT.

NO.	DATE	BY	CHECK	DESIGN	REVISION / SUBMITTAL

DESIGNED BY: KR CHECKED BY: KJK
DRAWN BY: MSK CHECKED BY: KJK

AECOM Kimley»Horn

90% SUBMISSION - 01/22/16

METROPOLITAN COUNCIL

SOUTHWEST Green Line LRT Extension

CIVIL - VOLUME 4D
MINNEHAHA CREEK FREIGHT BRIDGE
BRIDGE R0688
EAST ABUTMENT REINFORCEMENT 2

DISCIPLINE: STRUCTURES
SHEET NAME: CBRR0688-BRG-ABT-014-2

SHEET 15 OF 45

Dec, 11 2015 09:51 am V:\3400_ADC\CAD\SEGMENT E2\PLAN SHEETS\STRUCTURES\R0688\CBRR0688-BRG-ABT-014.dwg By: kevin.kimm

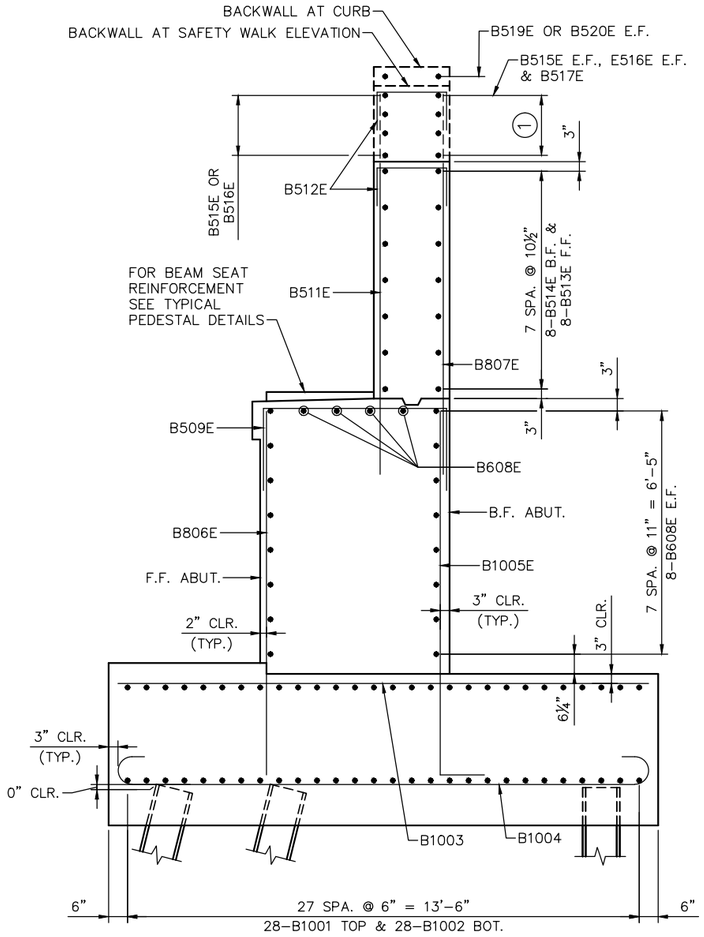

SECTION C-C

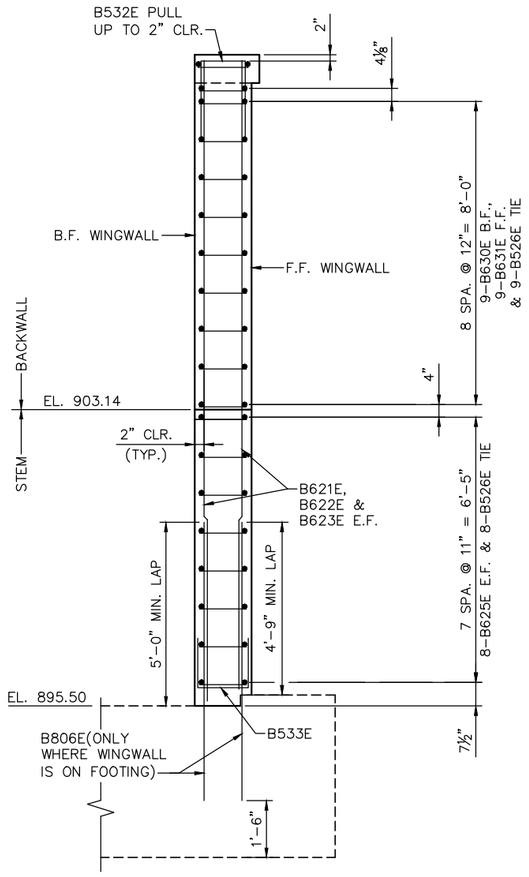

SECTION G-G

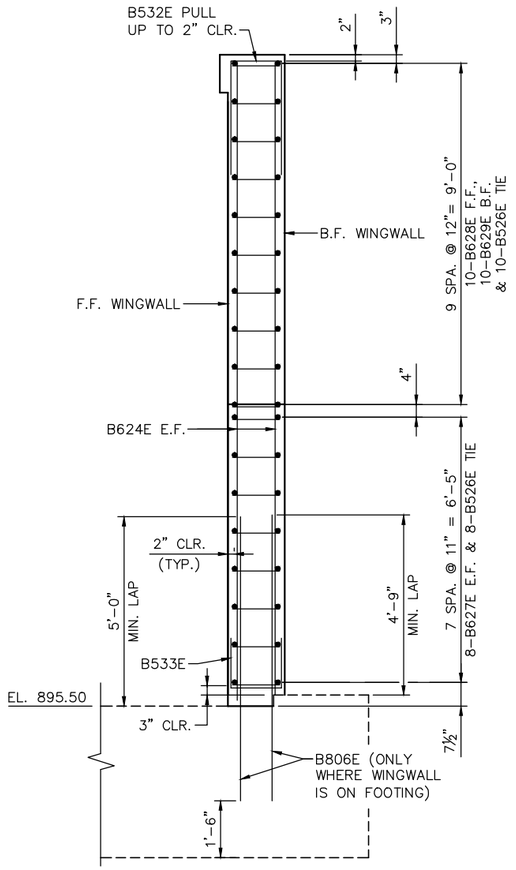

SECTION H-H

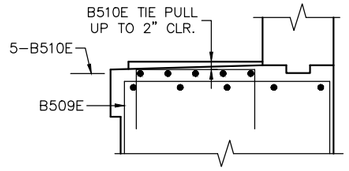

TYPICAL PEDESTAL SECTION

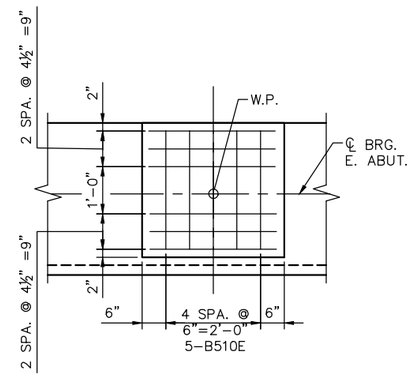

TYPICAL PEDESTAL PLAN

NOTES:

(1) 3 SPA. @ 8" = 2'-0"

NO.	DATE	BY	CHECK	DESIGN	REVISION / SUBMITTAL

DESIGNED BY: KR | CHECKED BY: KJK
DRAWN BY: MSK | CHECKED BY: KJK

AECOM Kimley»Horn

90% SUBMISSION - 01/22/16

METROPOLITAN COUNCIL

SOUTHWEST Green Line LRT Extension

CIVIL - VOLUME 4D
MINNEHAHA CREEK FREIGHT BRIDGE
BRIDGE R0688
EAST ABUTMENT REINFORCEMENT 3

DISCIPLINE: STRUCTURES
SHEET NAME: CBRR0688-BRG-ABT-014-3

SHEET 16 OF 45

Dec, 11 2015 09:52 am V:\3400_ADC\CAD\SEGMENT E2\PLAN SHEETS\STRUCTURES\R0688\CBRR0688-BRG-ABT-014.dwg By: kevin.kimm

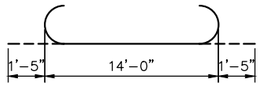

B1004

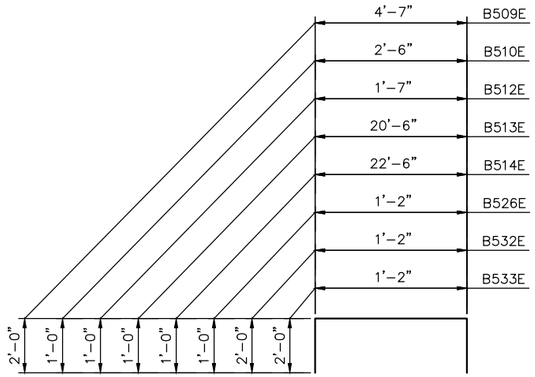

B509E, B510E, B512E, B513E,
B514E, B526E, B532E & B533E

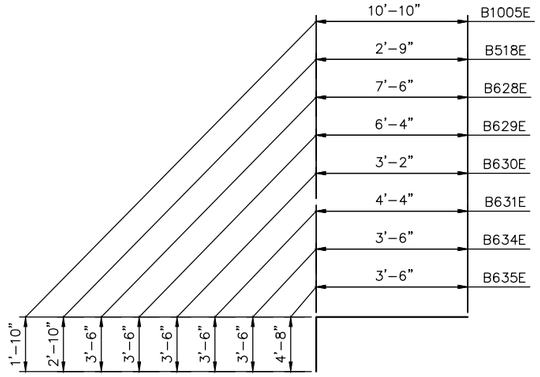

B1005E, B518B, B628E, B629E
B630E B631E, B634E & B635E

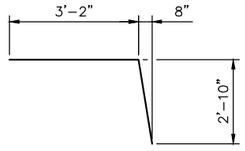

B517E

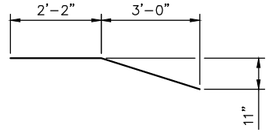

B519E

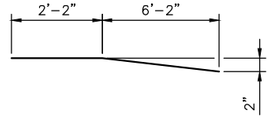

B520E

BILL OF REINFORCEMENT FOR EAST ABUTMENT				
BAR	NO.	LENGTH	SHAPE	LOCATION
B1001	28	23'-6"	STR.	FOOTING,LONG.TOP
B1002	28	23'-6"	STR.	FOOTING,LONG. BOT.
B1003	47	14'-0"	STR.	FOOTING,TRANS. TOP
B1004	47	16'-10"	BENT	BOOTING,TRANS. BOT.
B1005E	46	12'-8"	BENT	FOOTING,B.F.DOWEL
B806E	56	10'-10"	STR.	FOOTING,F.F.DOWELL
B807E	47	11'-4"	STR.	STEM,VERT.B.F.
B608E	20	22'-8"	STR.	STEM,LONG.
B509E	46	8'-7"	BENT	STEM,TOP TIE
B510E	44	4'-6"	BENT	PEDESTAL, TIE
B511E	60	10'-3"	STR.	BACKWALL,VERT.F.F.
B512E	47	3'-7"	BENT	BACKWALL,TOP TIE
B513E	7	22'-6"	BENT	BACKWALL,HORIZ.F.F.
B514E	7	24'-6"	BENT	BACKWALL,HORIZ.B.F.
B515E	8	5'-0"	STR.	BACKWALL SWLK E.F.
B516E	8	5'-0"	STR.	BACKWALL SWLK E.F.
B517E	4	6'-1"	BENT	BACKWALL SWLK TO BOT.E.F.
B518E	2	5'-7"	BENT	WINGWALL HORIZ. E.F.
B519E	2	5'-4"	BENT	WINGWALL TOP HORIZ.E.F.
B520E	2	8'-4"	BENT	WINGWALL TOP HORIZ. E.F.
B621E	2	17'-0"	STR.	WINGWALL VERT E.F.
B622E	2	16'-6"	STR.	WINGWALL VERT. E.F.
B623E	2	16'-0"	STR.	WINGWALL VERT. E.F.
B624E	14	17'-0"	STR.	WINGWALL VERT. E.F.
B625E	16	6'-8"	STR.	WINGWALL HORZ. E.F.
B526E	35	3'-2"	BENT	WINGWALL END TIE
B627E	16	9'-10"	STR.	WINGWALL HORIZ. E.F.
B628E	10	11'-0"	BENT	WINGWALL HORIZ. B.F.
B629E	10	9'-10"	BENT	WINGWALL HORIZ. F.F.
B630E	9	6'-8"	BENT	WINGWALL HORIZ. B.F.
B631E	9	7'-10"	BENT	WINGWALL HORIZ. F.F.
B532E	10	5'-2"	BENT	WINGWALL TOP TIE
B533E	10	5'-2"	BENT	WINGWALL BOT. TIE
B634E	6	6'-8"	BENT	WINGWALL HORIZ. SWALK
B635E	6	8'-2"	BENT	WINGWALL HORIZ. SWALK

NO.	DATE	BY	CHECK	DESIGN	REVISION / SUBMITTAL

DESIGNED BY: KR | CHECKED BY: KJK
DRAWN BY: MSK | CHECKED BY: KJK

AECOM Kimley»Horn

90% SUBMISSION - 01/22/16

METROPOLITAN COUNCIL

SOUTHWEST Green Line LRT Extension

CIVIL - VOLUME 4D
MINNEHAHA CREEK FREIGHT BRIDGE
BRIDGE R0688
EAST ABUTMENT REINFORCEMENT 4

DISCIPLINE: STRUCTURES

SHEET NAME: CBRR0688-BRG-ABT-014-4

SHEET 17 OF 45

Dec, 11 2015 09:52 am V:\3400_ADC\CAD\SEGMENT E2\PLAN SHEETS\STRUCTURES\R0688\CBRR0688-BRG-ABT-014.dwg By: kevin.kimm

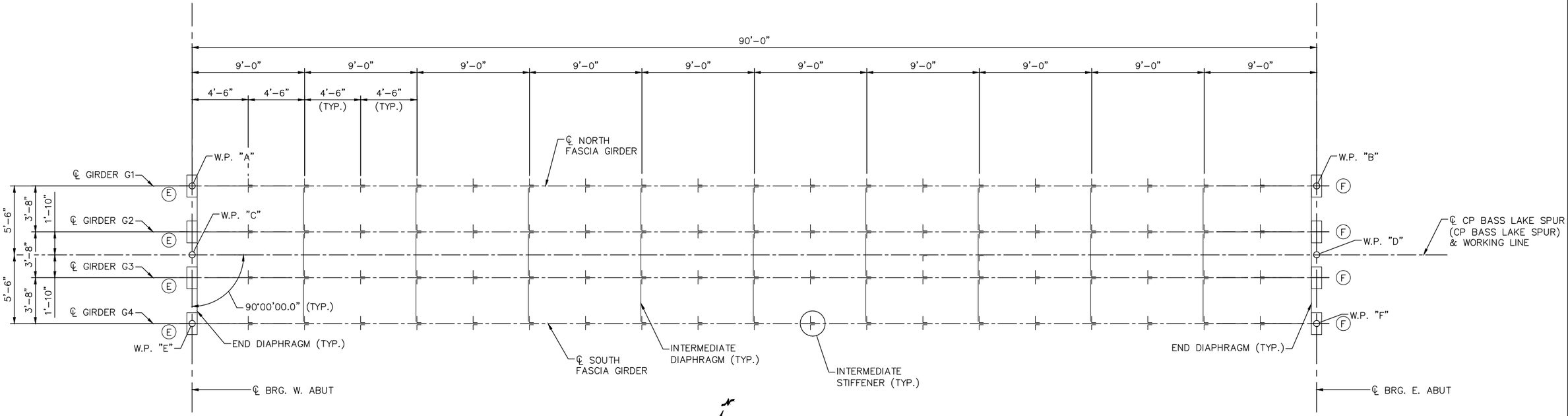

FRAMING PLAN

NOTES:

SPACING OF INTERMEDIATE STIFFENERS IS GIVEN WITH RESPECT TO BACK FACE OF ANGLES.

(E) DENOTES EXPANSION BEARING ASSEMBLY.

(F) DENOTES FIXED BEARING ASSEMBLY.

FOR FURTHER INFORMATION ON BEARING ASSEMBLIES, REFER TO GIRDER ELEVATION SHEET AND THE BEARING ASSEMBLY DETAILS SHEETS.

ALL GIRDERS SET PARALLEL TO WORKING LINE, ALL DIAPHRAGMS SET PARALLEL TO SUBSTRUCTURES.

NO.	DATE	BY	CHECK	DESIGN	REVISION / SUBMITTAL

DESIGNED BY: KR | CHECKED BY: KJK
DRAWN BY: MSK | CHECKED BY: KJK

AECOM Kimley»Horn

90% SUBMISSION - 01/22/16

METROPOLITAN COUNCIL

SOUTHWEST Green Line LRT Extension

CIVIL - VOLUME 4D
MINNEHAHA CREEK FREIGHT BRIDGE
BRIDGE R0688
FRAMING PLAN

DISCIPLINE: STRUCTURES
SHEET NAME: CBRR0688-BRG-SUP-004

SHEET 18 OF 45

Dec, 11 2015 09:53 am V:\3400_ADC\CAD\SEGMENT E2\PLAN SHEETS\STRUCTURES\R0688\CBRR0688-BRG-SUP-004.dwg By: kevin.kimm

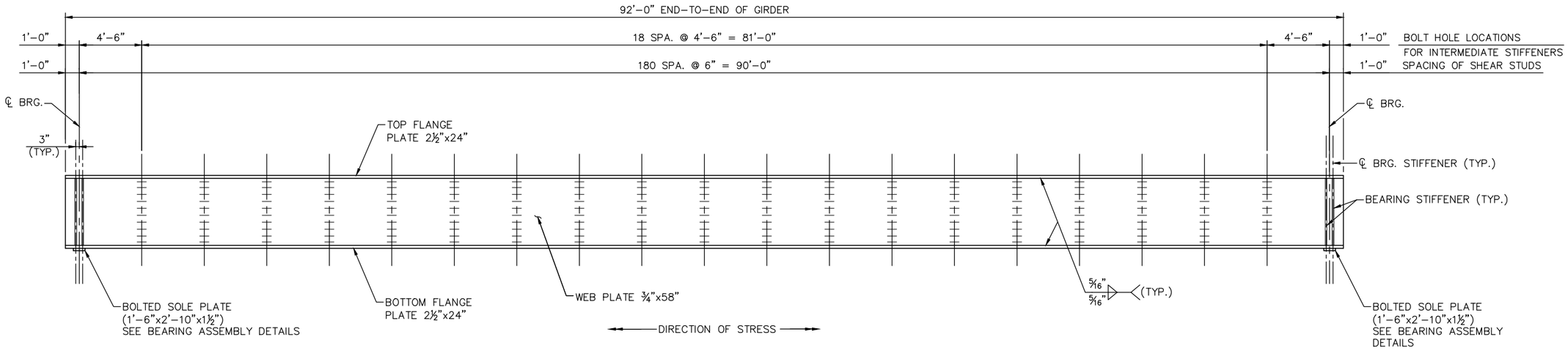

ELEVATION VIEW OF GIRDERS G1 – G4

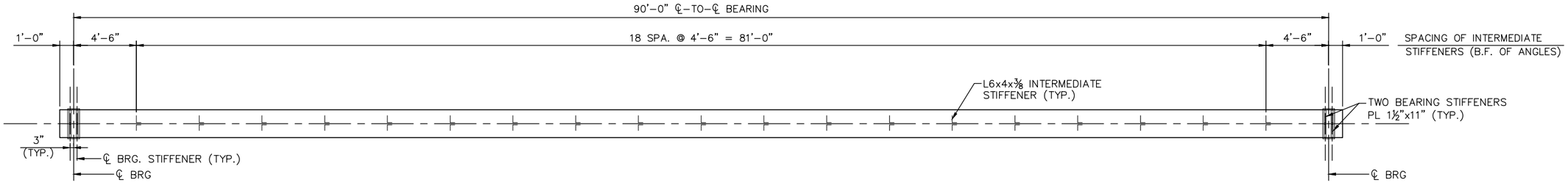

PLAN VIEW OF GIRDERS G1 – G4

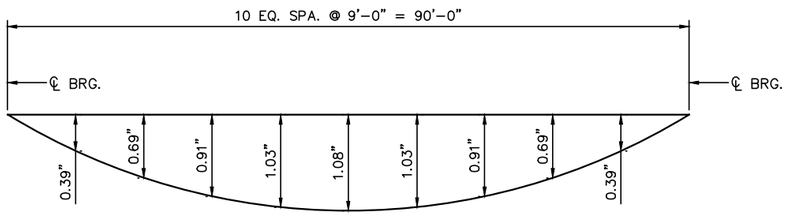

DEFLECTION DIAGRAM

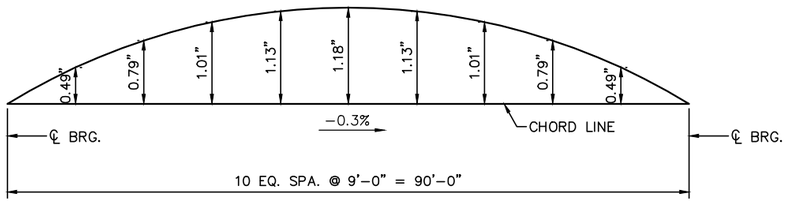

CAMBER DIAGRAM

GENERAL NOTES:

ALL STRUCTURAL STEEL SHALL CONFORM TO MN/DOT 3309 ASTM GRADE 50WT3 UNLESS OTHERWISE NOTED.

SHEAR STUDS ON THE TOP FLANGE OF THE GIRDER SHALL BE INSTALLED IN THE FIELD.

BOLTED CONNECTIONS SHALL BE MADE WITH ⅞" DIAMETER A325 TYPE 3 HIGH STRENGTH BOLTS, EXCEPT AS NOTED. HOLES FOR ⅞" DIAMETER BOLTS SHALL BE 15/16". OVERSIZE HOLES WILL NOT BE PERMITTED.

PLACE NUT AND WASHER ON INSIDE OF GIRDER FOR ALL BOLTS THROUGH GIRDER WEB.

WEB AND FLANGE PLATES SHALL BE FURNISHED IN AVAILABLE MILL LENGTHS WITH A MINIMUM NUMBER OF SPLICES. LOCATION OF SPLICES SHALL BE APPROVED BY ENGINEER. A SPLICE SHALL BE MINIMUM OF 12" FROM ANY STIFFENER. NO SPLICES WILL BE ALLOWED 12'-0" FROM MIDPOINT OF GIRDER.

FOR WELDED FLANGE SPLICES, SEE SPEC 2471.3F1A.

BEARING STIFFENERS AND ENDS OF BEAMS SHALL BE PERPENDICULAR TO FLANGE.

ROWS OF SHEAR CONNECTORS SHALL BE ALIGNED PARALLEL TO THE TRANSVERSE SLAB REINFORCEMENT BARS.

SOLE PLATES SHALL BE BOLTED TO BOTTOM FLANGE PLATES, FOR DETAILS REFER TO BEARING ASSEMBLY DETAILS SHEET.

NO WELDING OR DRILLING OF HOLES FOR TEMPORARY ATTACHMENTS WILL BE PERMITTED.

THE STRUCTURAL STEEL FABRICATOR SHALL BE CERTIFIED UNDER THE A.I.S.C. QUALITY CERTIFICATION PROGRAM, CATEGORY, MAJOR STEEL BRIDGES (Cbr.).

CAMBER DIAGRAM SHOWN IS FOR BEAM IN UNLOADED POSITION AND PROVIDES FOR ALL DEAD LOAD DEFLECTIONS AND GEOMETRIC CAMBER. RESIDUAL CAMBER IS NOT REQUIRED.

CHORD LINE IN CAMBER DIAGRAM IS A STRAIGHT LINE FROM ℄ BRG TO ℄ BRG. AT TOP OF WEB.

NO.	DATE	BY	CHECK	DESIGN	REVISION / SUBMITTAL

DESIGNED BY: KR | CHECKED BY: KJK
DRAWN BY: MSK | CHECKED BY: KJK

AECOM Kimley»Horn

90% SUBMISSION - 01/22/16

METROPOLITAN COUNCIL

SOUTHWEST Green Line LRT Extension

CIVIL - VOLUME 4D
MINNEHAHA CREEK FREIGHT BRIDGE
BRIDGE R0688
GIRDER ELEVATION

DISCIPLINE: STRUCTURES
SHEET NAME: CBRR0688-BRG-STL-001

SHEET 19 OF 45

Dec, 11 2015 09:53 am V:\3400_ADC\CAD\SEGMENT E2\PLAN SHEETS\STRUCTURES\R0688\CBRR0688-BRG-STL-001.dwg By: kevin.kimm

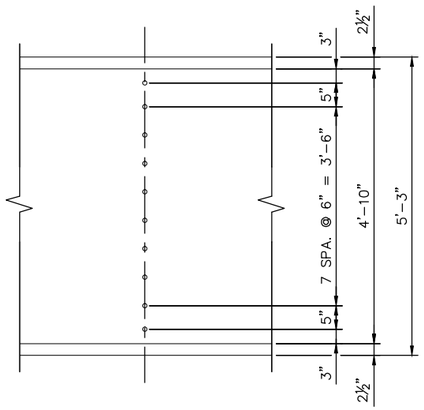

INTERMEDIATE STIFFENER
BOLT HOLE LAYOUT

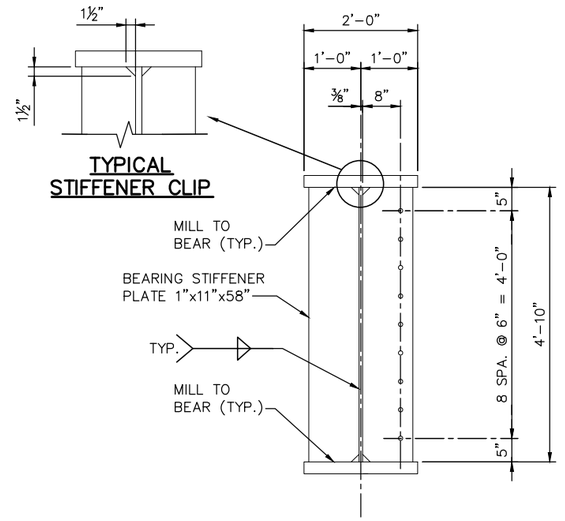

FRONT END
BEARING STIFFENER

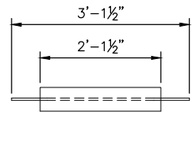

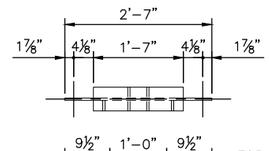

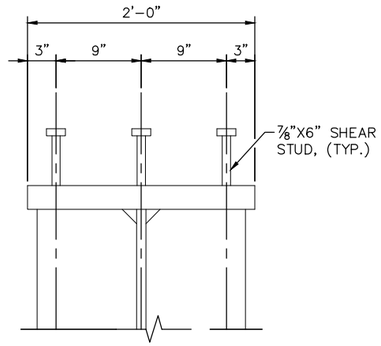

SHEAR STUD DETAIL

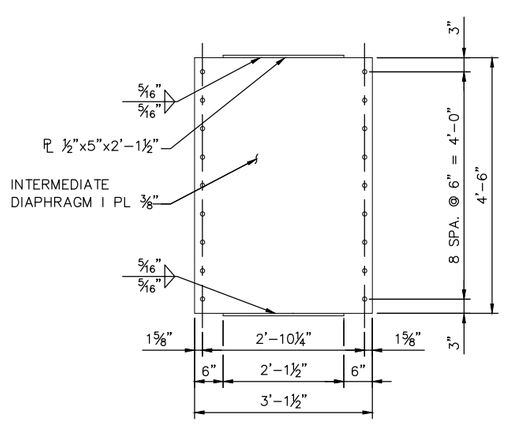

INTERMEDIATE DIAPHRAGM DETAIL
(SEE SHEET 21 FOR OTHER DETAILS)

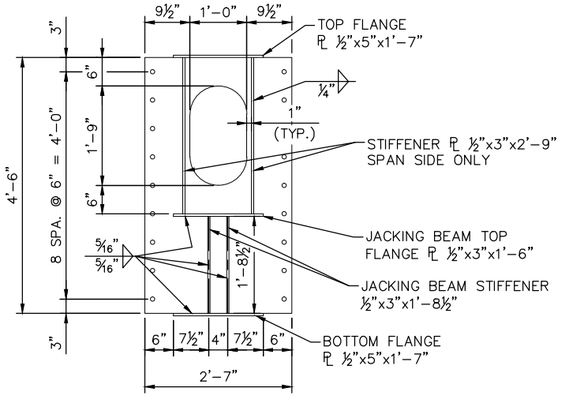

BEARING DIAPHRAGM DETAIL
(SEE SHEET 21 FOR OTHER DETAILS)

NO.	DATE	BY	CHECK	DESIGN	REVISION / SUBMITTAL

DESIGNED BY: KR CHECKED BY: KJK
DRAWN BY: MSK CHECKED BY: KJK

AECOM Kimley»Horn

90% SUBMISSION - 01/22/16

METROPOLITAN COUNCIL

SOUTHWEST Green Line LRT Extension

CIVIL - VOLUME 4D
MINNEHAHA CREEK FREIGHT BRIDGE
BRIDGE R0688
GIRDER DETAILS 1

DISCIPLINE: STRUCTURES
SHEET NAME: CBRR0688-BRG-STL-003

SHEET 20 OF 45

Dec, 11 2015 09:54 am V:\3400_ADC\CAD\SEGMENT E2\PLAN SHEETS\STRUCTURES\R0688\CBRR0688-BRG-STL-003.dwg By: kevin.kimm

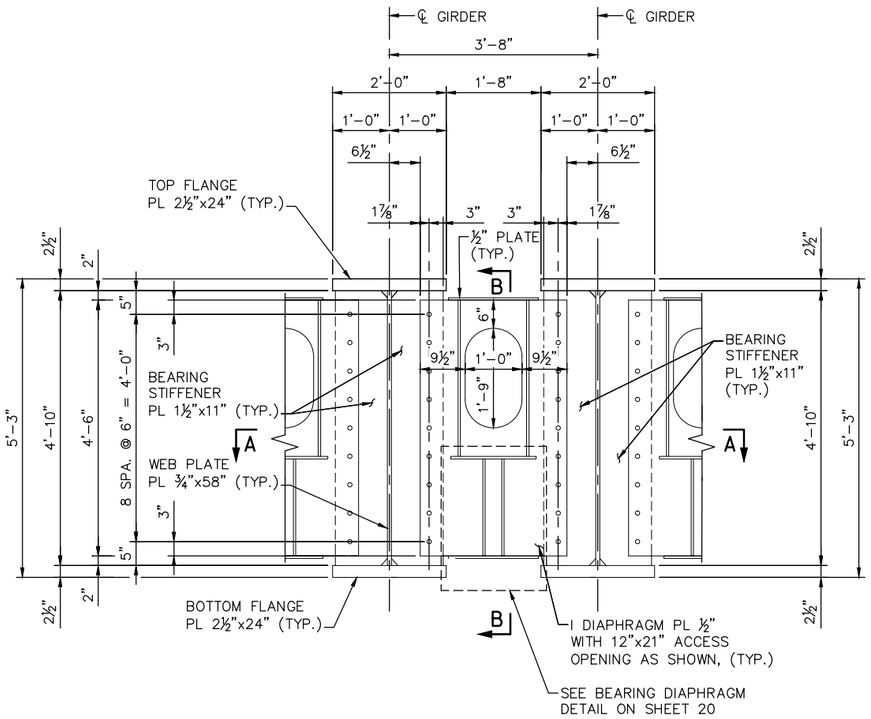

END BEARING STIFFENER AND DIAPHRAGM ELEVATION

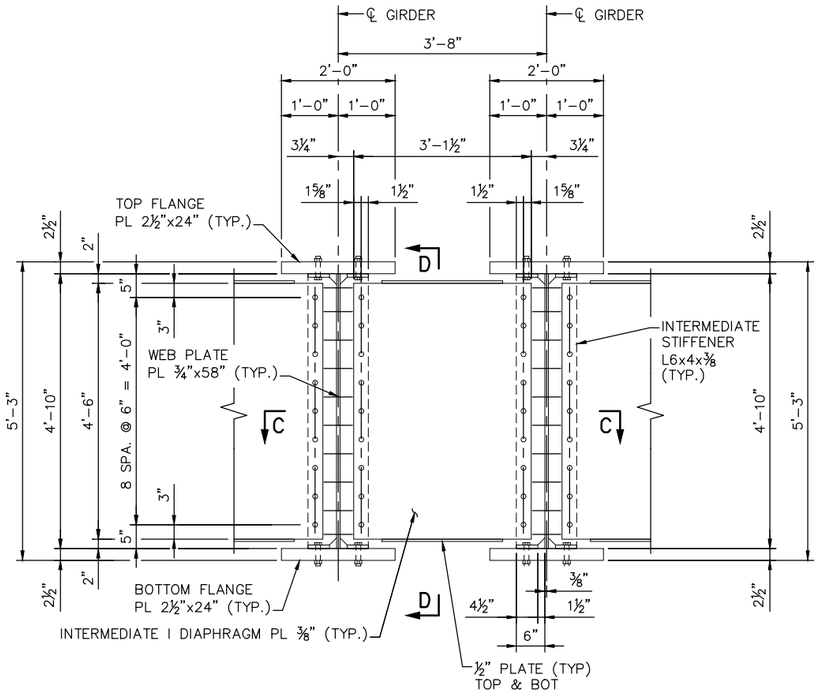

INTERMEDIATE DIAPHRAGM ELEVATION

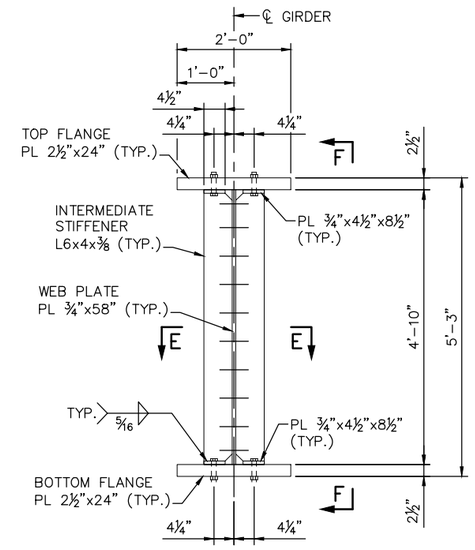

INTERMEDIATE STIFFENER

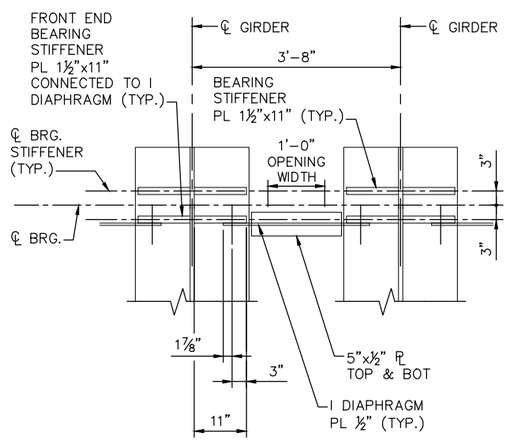

SECTION A–A

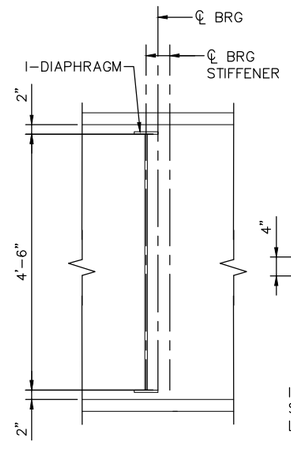

SECTION B–B

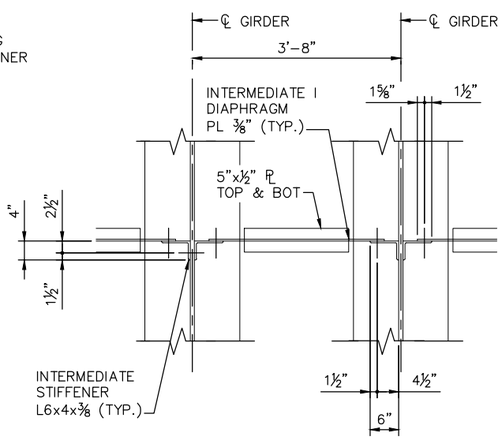

SECTION C–C

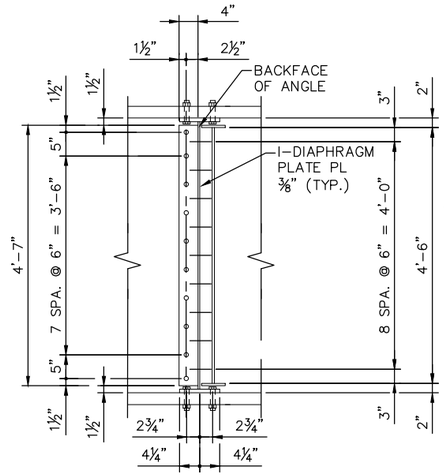

SECTION D–D

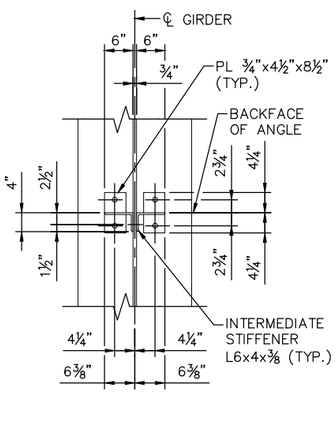

SECTION E–E

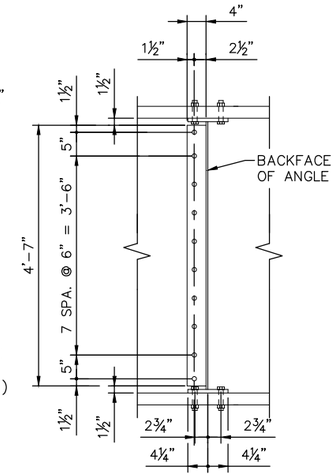

VIEW F–F

NO.	DATE	BY	CHECK	DESIGN	REVISION / SUBMITTAL

DESIGNED BY: KR | CHECKED BY: KJK
DRAWN BY: MSK | CHECKED BY: KJK

AECOM Kimley»Horn

90% SUBMISSION - 01/22/16

METROPOLITAN COUNCIL

SOUTHWEST Green Line LRT Extension

CIVIL - VOLUME 4D
MINNEHAHA CREEK FREIGHT BRIDGE
BRIDGE R0688
GIRDER DETAILS 2

DISCIPLINE: STRUCTURES
SHEET NAME: CBRR0688-BRG-STL-004

SHEET 21 OF 45

Dec, 11 2015 09:55 am V:\3400_ADC\CAD\SEGMENT E2\PLAN SHEETS\STRUCTURES\R0688\CBRR0688-BRG-STL-004.dwg By: kevin.kimm

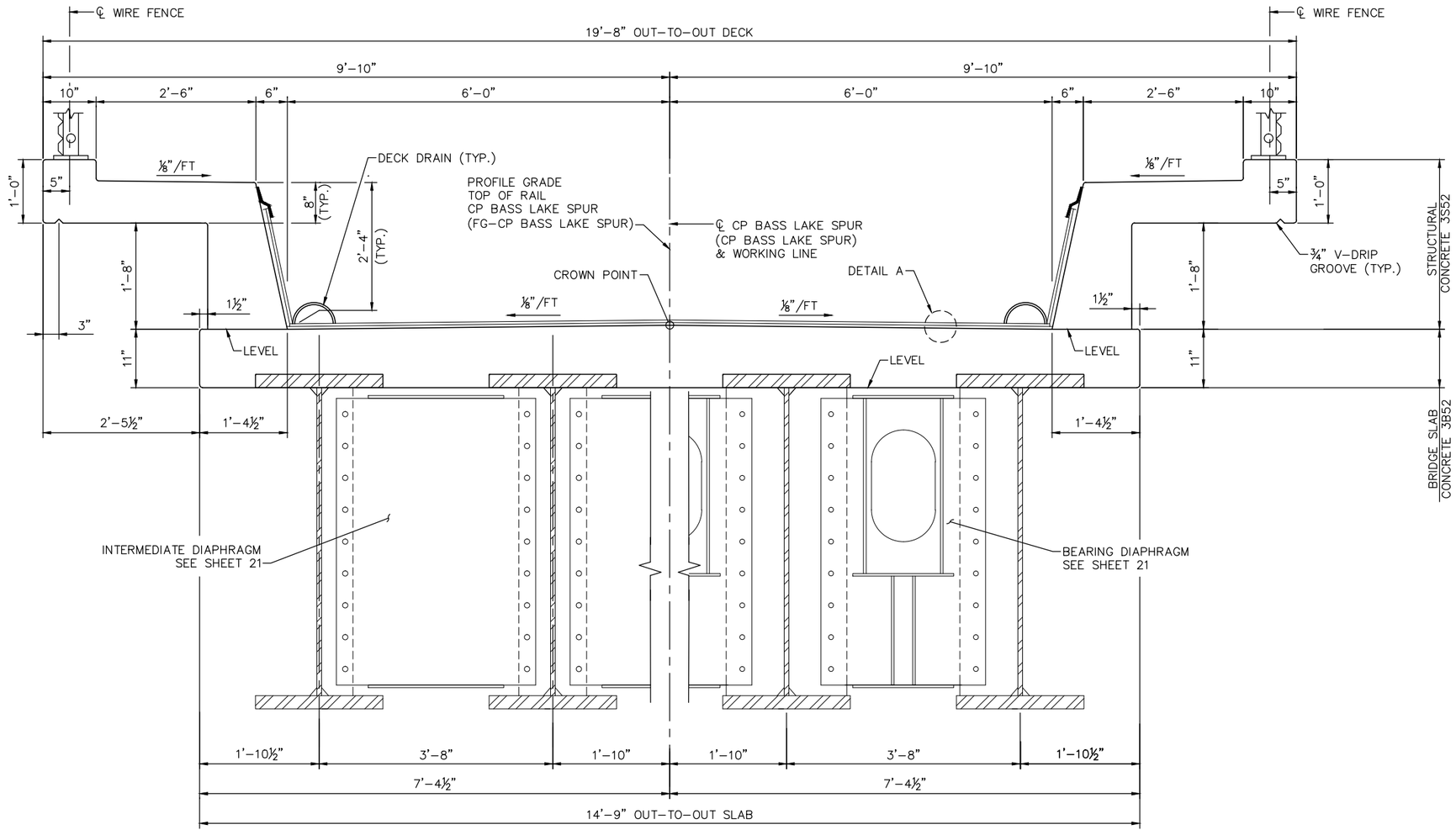

TRANSVERSE SECTION

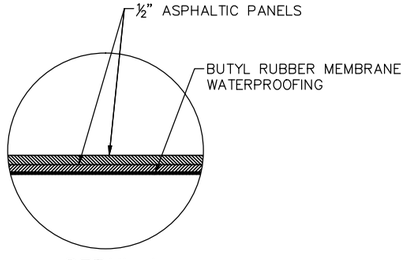

DETAIL A

NO.	DATE	BY	CHECK	DESIGN	REVISION / SUBMITTAL

DESIGNED BY: KR | CHECKED BY: KJK
DRAWN BY: MSK | CHECKED BY: KJK

AECOM Kimley»Horn

90% SUBMISSION - 01/22/16

METROPOLITAN COUNCIL

SOUTHWEST Green Line LRT Extension

CIVIL - VOLUME 4D
MINNEHAHA CREEK FREIGHT BRIDGE
BRIDGE R0688
SUPERSTRUCTURE DETAILS 1

DISCIPLINE: STRUCTURES
SHEET NAME: CBRR0688-BRG-SUP-007

SHEET 22 OF 45

Dec, 11 2015 09:56 am V:\3400_ADC\CAD\SEGMENT E2\PLAN SHEETS\STRUCTURES\R0688\CBRR0688-BRG-SUP-007.dwg By: kevin.kimm

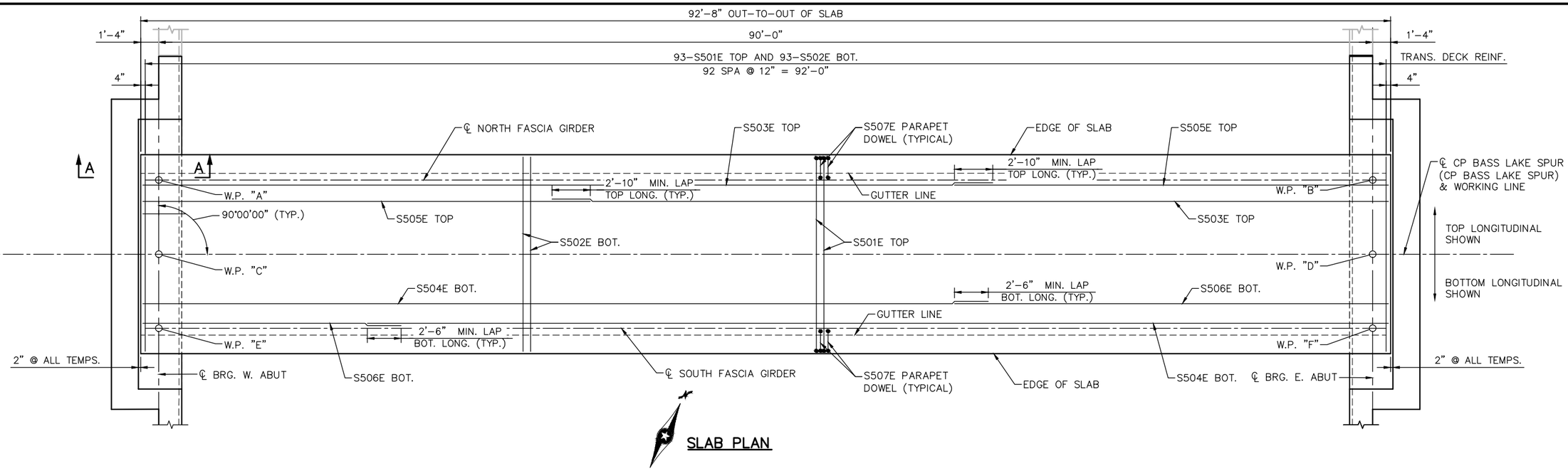

SLAB PLAN

NOTES:

SEE SHEET 25 FOR SECTION A-A (EDGE BEAM)

SEE SHEET 24 FOR PARAPET SAFETY WALK REINFORCING.

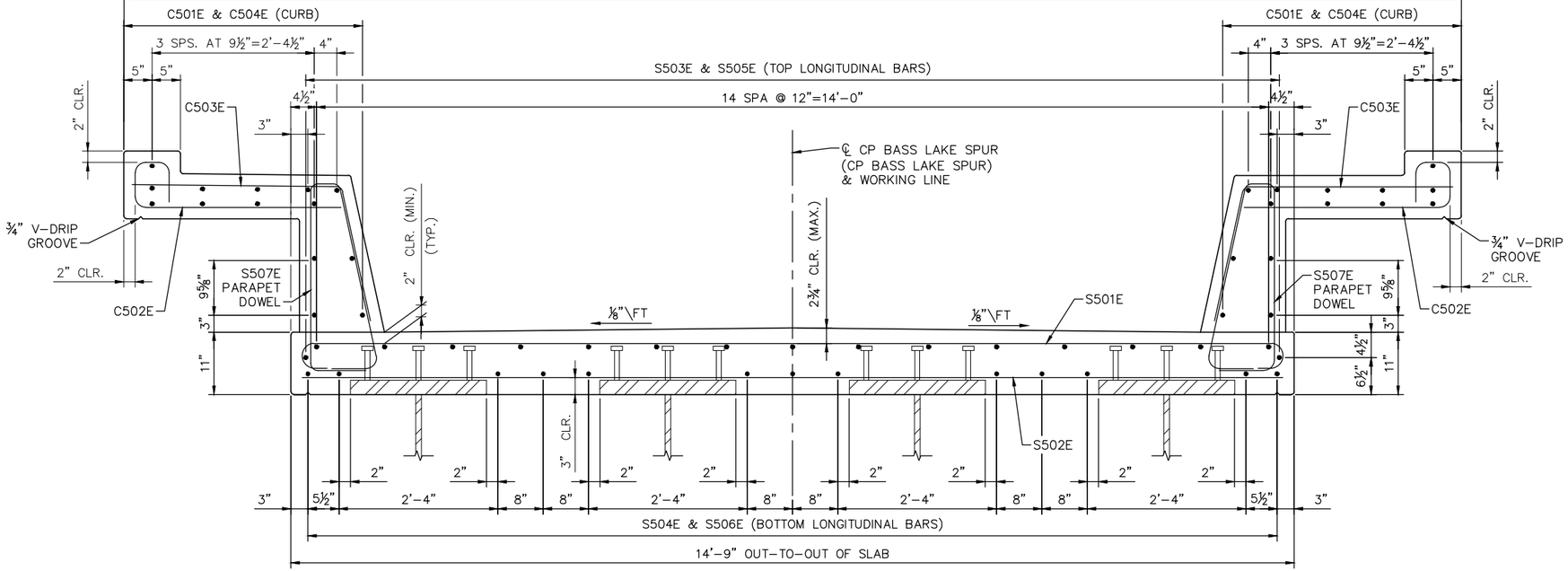

TRANSVERSE SECTION

NO.	DATE	BY	CHECK	DESIGN	REVISION / SUBMITTAL

DESIGNED BY: KR | CHECKED BY: KJK
DRAWN BY: MSK | CHECKED BY: KJK

AECOM Kimley»Horn

90% SUBMISSION - 01/22/16

METROPOLITAN COUNCIL

SOUTHWEST Green Line LRT Extension

CIVIL - VOLUME 4D
MINNEHAHA CREEK FREIGHT BRIDGE
BRIDGE R0688
SUPERSTRUCTURE DETAILS 2

DISCIPLINE: STRUCTURES
SHEET NAME: CBRR0688-BRG-SUP-005

SHEET 23 OF 45

Dec, 11 2015 09:57 am V:\3400_ADC\CAD\SEGMENT E2\PLAN SHEETS\STRUCTURES\R0688\CBRR0688-BRG-SUP-005.dwg By: kevin.kimm

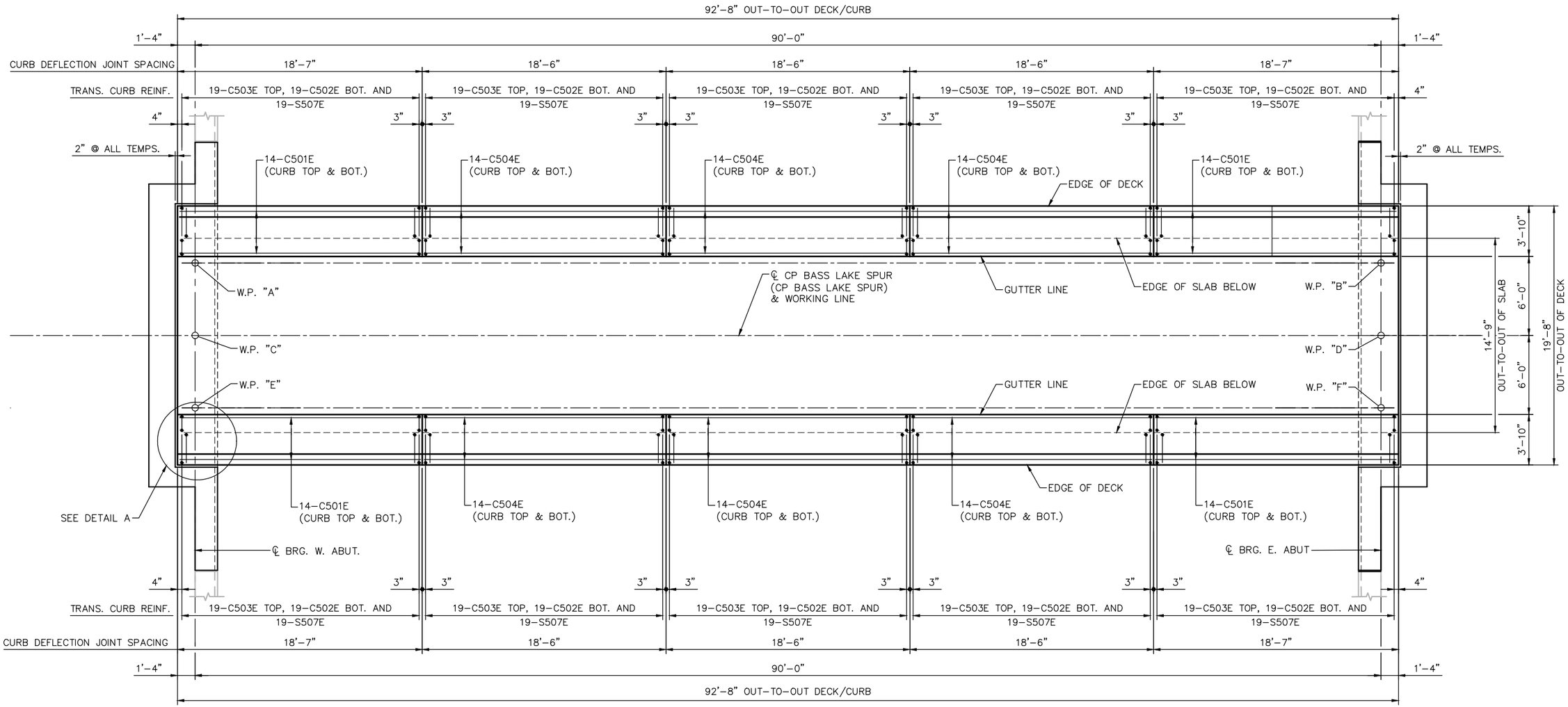

DECK/CURB PLAN

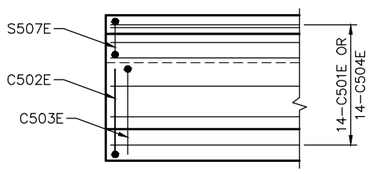

DETAIL A

NO.	DATE	BY	CHECK	DESIGN	REVISION / SUBMITTAL

DESIGNED BY: KR | CHECKED BY: KJK
DRAWN BY: MSK | CHECKED BY: KJK

AECOM Kimley»Horn

90% SUBMISSION - 01/22/16

METROPOLITAN COUNCIL

SOUTHWEST Green Line LRT Extension

CIVIL - VOLUME 4D
MINNEHAHA CREEK FREIGHT BRIDGE
BRIDGE R0688
SUPERSTRUCTURE DETAILS 3

DISCIPLINE: STRUCTURES
SHEET NAME: CBRR0688-BRG-SUP-006

SHEET 24 OF 45

Dec, 11 2015 09:58 am V:\3400_ADC\CAD\SEGMENT E2\PLAN SHEETS\STRUCTURES\R0688\CBRR0688-BRG-UPL-006.dwg By: kevin.kimm

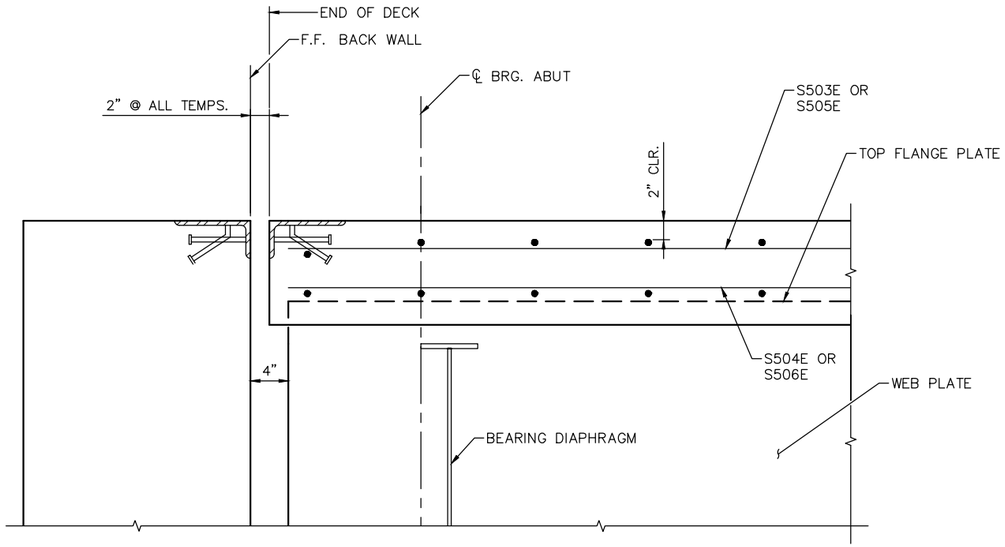

SECTION A–A

BILL OF REINFORCEMENT FOR SUPERSTRUCTURE

BAR	NO.	LENGTH	SHAPE	LOCATION
S501E	93	15'-7"	BENT	TOP TRANS.
S502E	93	14'-5"	STR.	BOT TRANS.
S503E	17	60'-0"	STR.	TOP LONG.
S504E	13	60'-0"	STR.	BOT LONG.
S505E	17	35'-2"	STR.	TOP LONG. LAP
S506E	13	34'-10"	STR.	BOT LONG. LAP
S507E	190	7'-8"	BENT	PARAPET DOWEL
C501E	56	18'-3"	STR.	LONG. CURB ENDS
C502E	190	4'-9"	BENT	CURB BOT.
C503E	190	5'-0"	BENT	CURB TOP
C504E	84	18'-2"	STR.	LONG. CURB MID

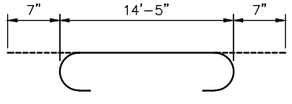

S501E

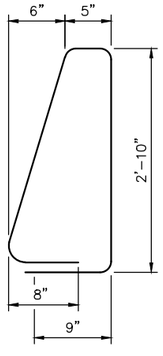

S507E

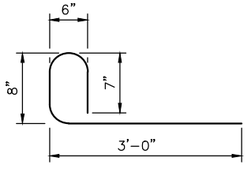

C502E

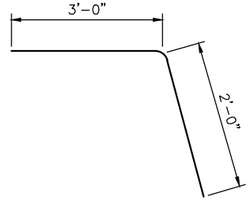

C503E

NO.	DATE	BY	CHECK	DESIGN	REVISION / SUBMITTAL

DESIGNED BY: KR | CHECKED BY: KJK
DRAWN BY: MSK | CHECKED BY: KJK

AECOM Kimley»Horn

90% SUBMISSION - 01/22/16

METROPOLITAN COUNCIL

SOUTHWEST Green Line LRT Extension

CIVIL - VOLUME 4D
MINNEHAHA CREEK FREIGHT BRIDGE
BRIDGE R0688
SUPERSTRUCTURE DETAILS 4

DISCIPLINE: STRUCTURES
SHEET NAME: CBRR0688-BRG-SUP-009

SHEET 25 OF 45

Dec, 11 2015 09:59 am V:\3400_ADC\CAD\SEGMENT E2\PLAN SHEETS\STRUCTURES\R0688\CBRR0688-BRG-SUP-009.dwg By: kevin.kimm

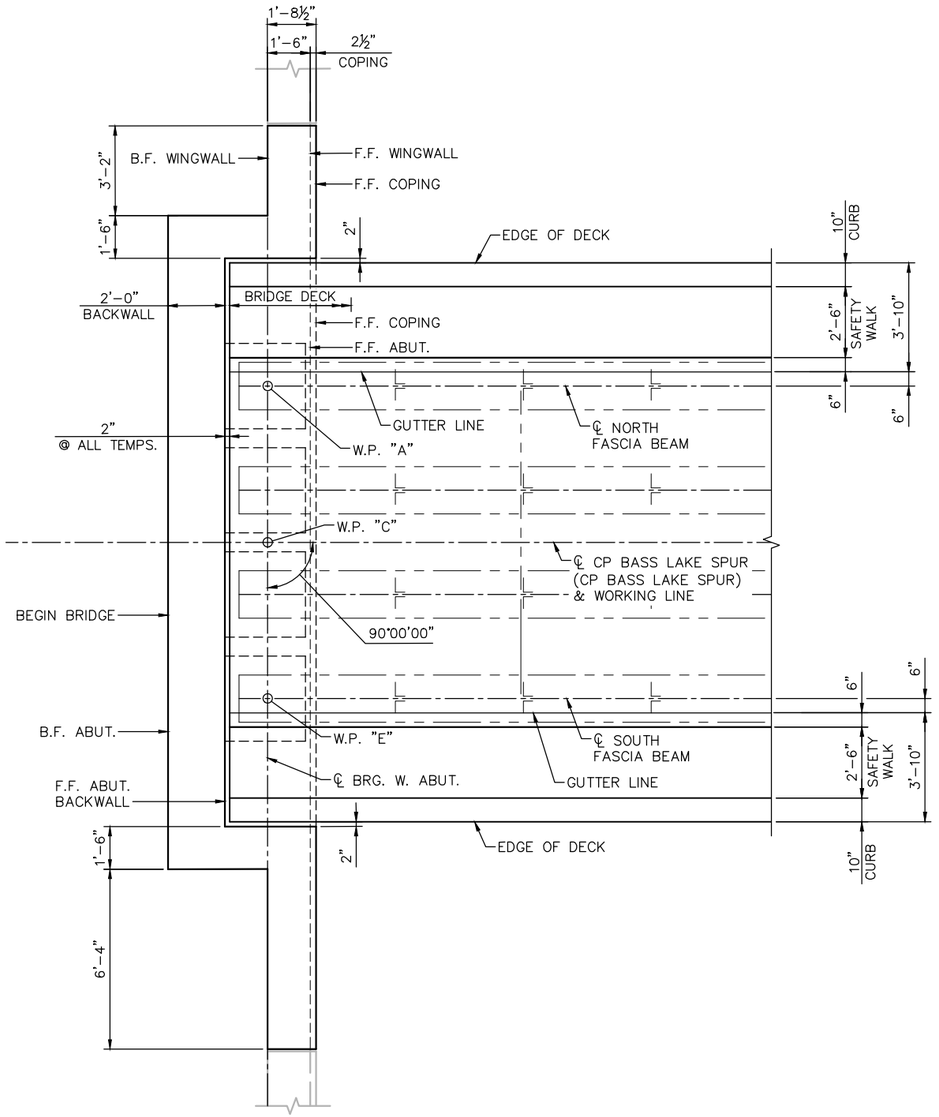

WEST ABUTMENT CORNER DETAIL

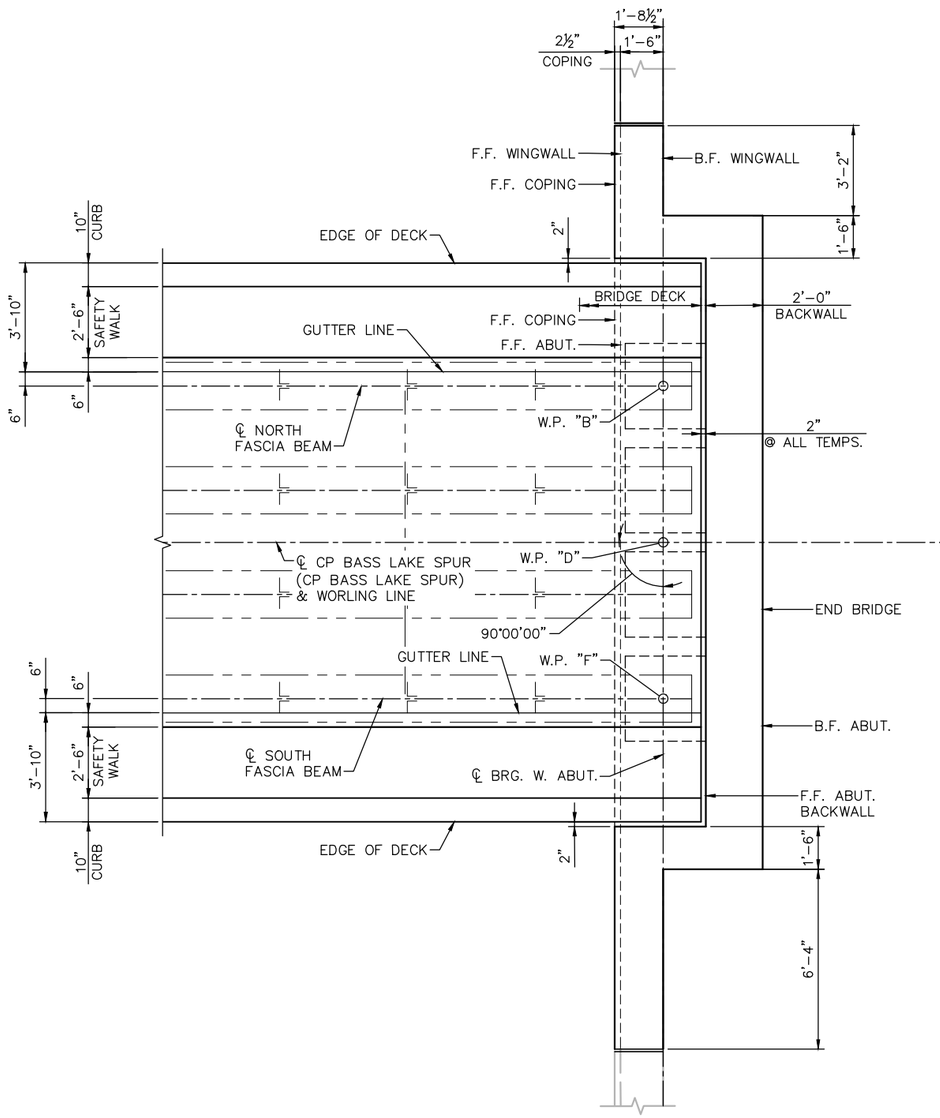

EAST ABUTMENT CORNER DETAIL

NO.	DATE	BY	CHECK	DESIGN	REVISION / SUBMITTAL

DESIGNED BY: KR | CHECKED BY: KJK
DRAWN BY: MSK | CHECKED BY: KJK

AECOM Kimley»Horn

90% SUBMISSION - 01/22/16

METROPOLITAN COUNCIL

SOUTHWEST Green Line LRT Extension

CIVIL - VOLUME 4D
MINNEHAHA CREEK FREIGHT BRIDGE
BRIDGE R0688
SUPERSTRUCTURE DETAILS 5

DISCIPLINE: STRUCTURES
SHEET NAME: CBRR0688-BRG-SUP-008

SHEET 26 OF 45

Dec, 11 2015 10:00 am V:\3400_ADC\CAD\SEGMENT E2\PLAN SHEETS\STRUCTURES\R0688\CBRR0688-BRG-SUP-008.dwg By: kevin.kimm

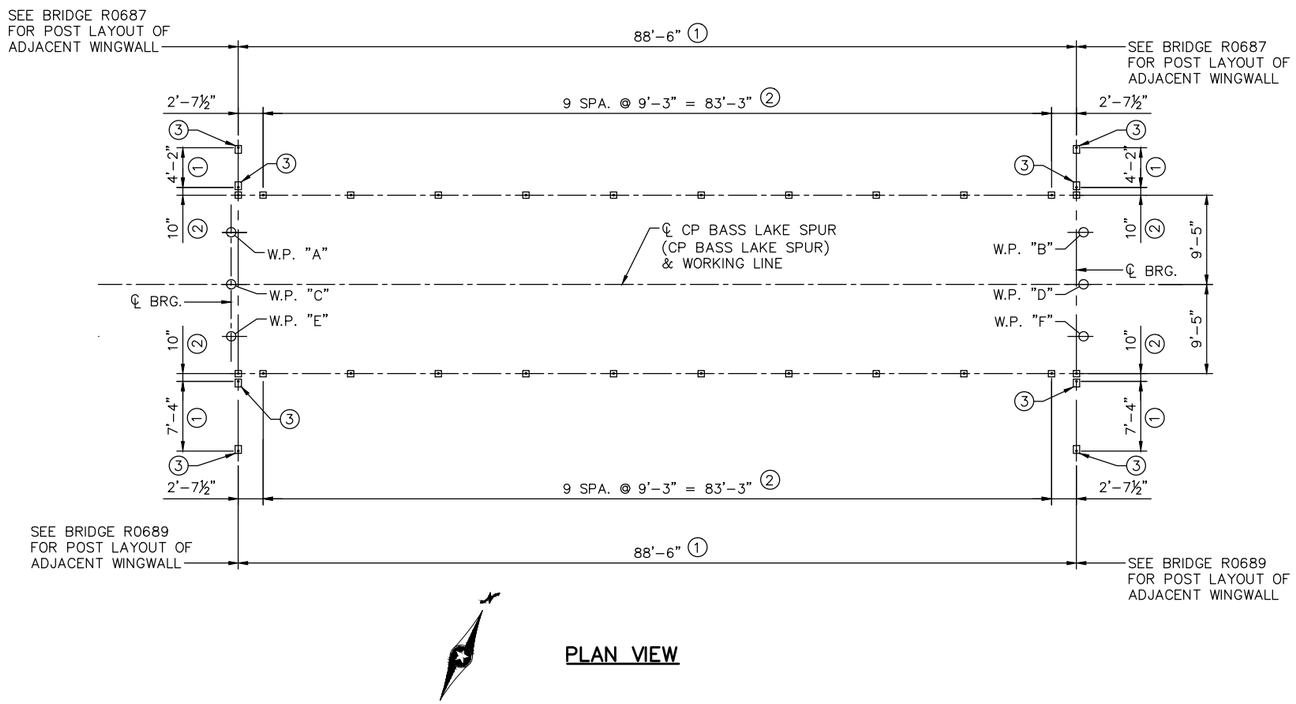

PLAN VIEW

NOTES:

POST SHALL BE SET VERTICAL.

STRUCTURAL STEEL PER MnDOT SPEC. 3306.

STRUCTURAL PIPE PER MnDOT SPEC. 3362.

GALVANZING THE FENCE POST ANCHORAGE AFTER FABRICATION PER MnDOT SPEC. 3394. GALVANIZE THE FASTENERS PER SPEC. 3392.

(1) WIRE FENCE, FIGURE S-397.119 (MOD.).

(2) FENCE POST ANCHORAGES SHALL BE TYPE A. SEE DETAIL B905.

(3) OFFSET FENCE POST ANCHORAGE.

NO.	DATE	BY	CHECK	DESIGN	REVISION / SUBMITTAL

DESIGNED BY: KR | CHECKED BY: KJK
DRAWN BY: MSK | CHECKED BY: KJK

AECOM Kimley»Horn

90% SUBMISSION - 01/22/16

METROPOLITAN COUNCIL

SOUTHWEST Green Line LRT Extension

CIVIL - VOLUME 4D
MINNEHAHA CREEK FREIGHT BRIDGE
BRIDGE R0688
SUPERSTRUCTURE DETAILS 6

DISCIPLINE: STRUCTURES
SHEET NAME: CBRR0688-BRG-STL-005

SHEET 27 OF 45

Dec, 11 2015 10:01 am v:\3400_ADC\CAD\SEGMENT E2\PLAN SHEETS\STRUCTURES\R0688\CBRR0688-BRG-STL-005.dwg By: kevin.kimm

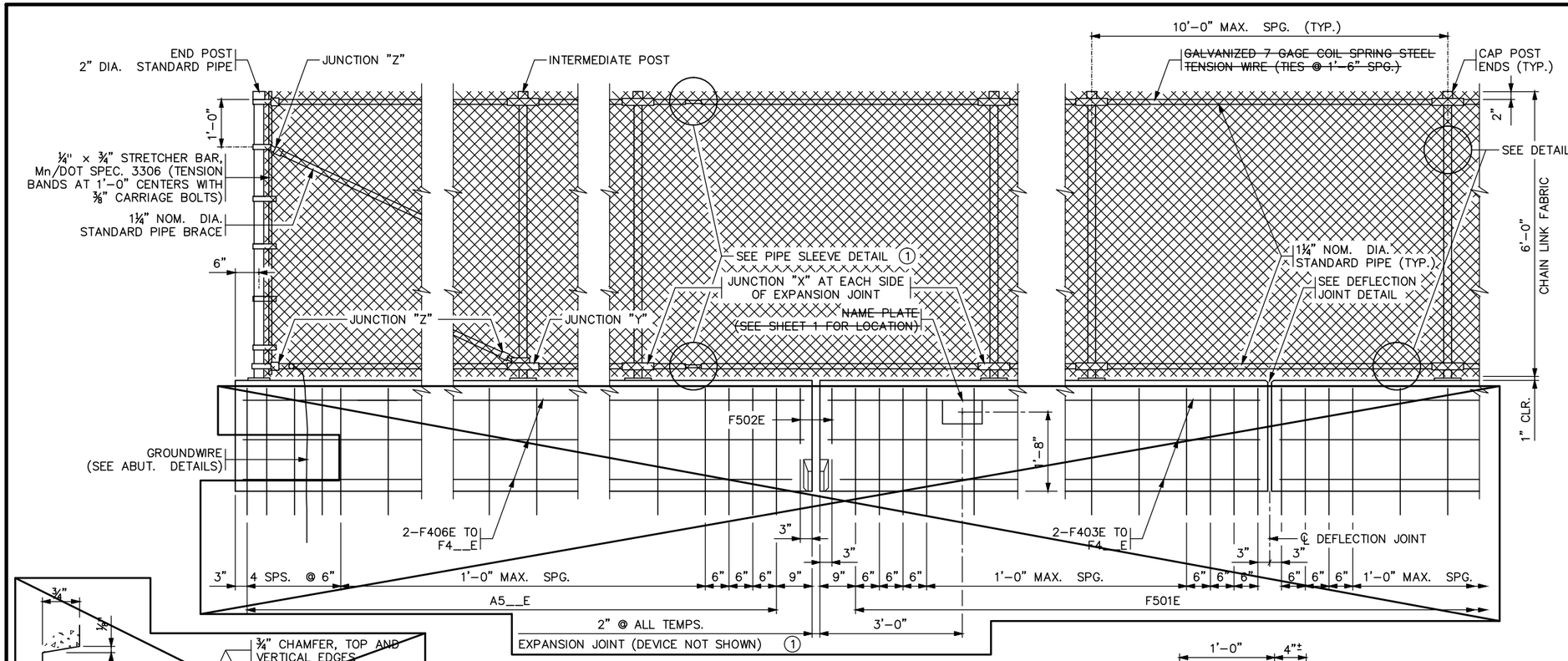

Ⓐ INSIDE ELEVATION OF RAILING

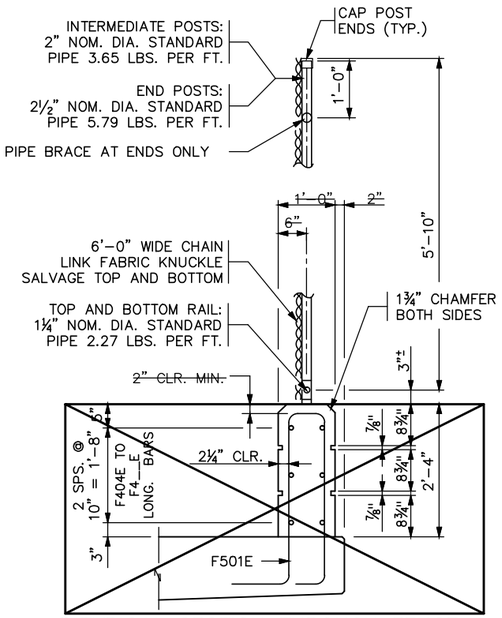

Ⓐ TYPICAL SECTION THROUGH FENCE

INTERMEDIATE POST SHOWN

SHEET MODIFICATION:
Ⓐ DENOTES MODIFICATION TO STANDARD SHEET

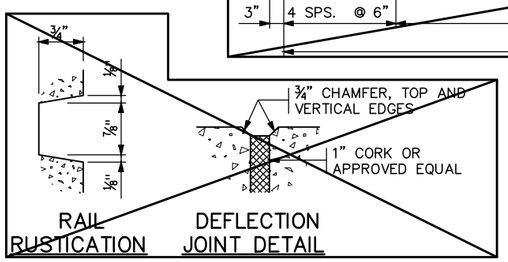

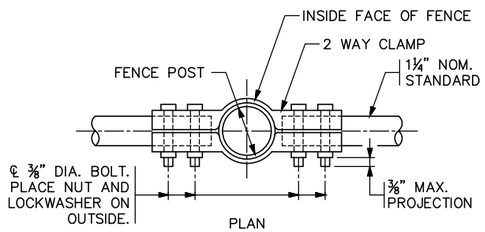

2 WAY CLAMP BENDING TABLE	
GRADE OF FENCE	Ø
0° TO 2°	0°
2° TO 6°	4°
6° TO 10°	8°

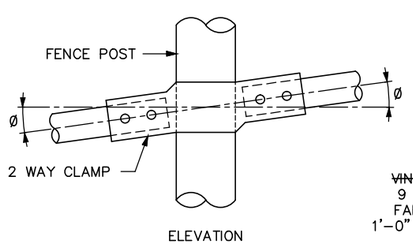

JUNCTION "X"

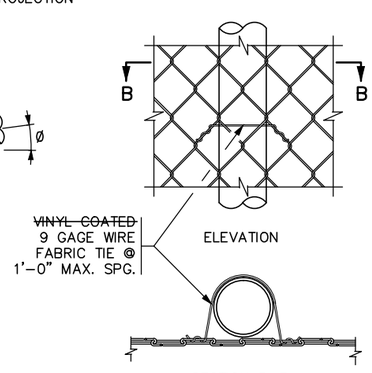

DETAIL "A"

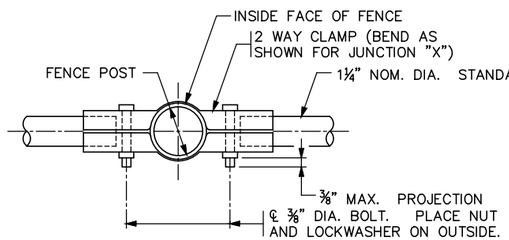

JUNCTION "Y"

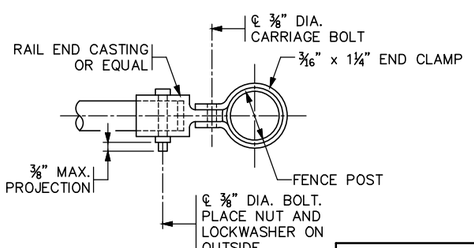

JUNCTION "Z"

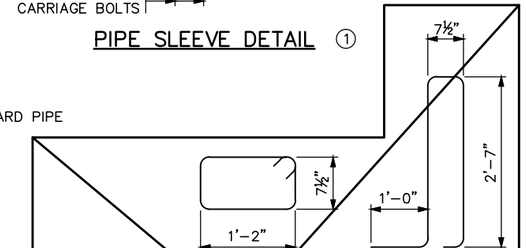

PIPE SLEEVE DETAIL (1)

BILL OF REINFORCEMENT FOR PARAPET				
BAR	NO.	LENGTH	SHAPE	LOCATION
F501E		7'-3"		RAIL BASE VERTICAL
F502E		4'-6"		RAIL BASE VERTICAL
F403E				RAIL BASE LONGITUDINAL
F404E				RAIL BASE LONGITUDINAL

GENERAL NOTES

Ⓐ SEE SUPERSTRUCTURE DETAILS SHEETS FOR CURB DIMENSION, REINFORCEMENT AND NOTES.

~~LENGTH OF "TYPE P-1 RAILING CONCRETE (3Y46 OR 3Y46A)" FOR PAYMENT SHALL BE MEASURED BETWEEN THE OUTSIDE FACES OF THE CONCRETE RAIL.~~

Ⓐ LENGTH OF "WIRE FENCE" ~~FOR PAYMENT~~ SHALL BE MEASURED BETWEEN THE CENTERS OF END RAILPOSTS.

~~CONCRETE RAILING = 350 LBS./FT. (0.086 CU. YDS./FT.)~~

FENCE POST ANCHORAGES SHALL BE TYPE A. SEE DETAIL B905 "FENCE POST ANCHORAGE".

~~MAXIMUM SPACING OF DEFLECTION JOINTS SHALL BE 20 FT. FOR SPACING OF FENCE POST, JOINTS AND ELECTRICAL GROUNDS, SEE SUPERSTRUCTURE SHEETS.~~

FENCE POSTS AND FENCE POST ANCHORAGES SHALL BE SET VERTICAL, UNLESS OTHERWISE NOTED.

℄ OF FENCE POST ANCHORAGE SHALL BE A MINIMUM OF 6" FROM JOINTS.

END POSTS AND BRACING SHALL BE AT 500 FT. MAXIMUM INTERVALS.

~~ALL POSTS SHALL HAVE A MEANS TO SECURELY HOLD THE TOP TENSION WIRE IN POSITION AND ALLOW FOR THE REMOVAL AND REPLACEMENT OF A POST WITHOUT DAMAGING THE TOP WIRE.~~

WIRE TIES MAY BE 9 GAGE GALVANIZED STEEL OR 0.179" MIN. ALUMINUM ALLOY CONFORMING TO A.S.T.M. B211, ALLOY 1100-H18. ~~USE 12½ GAGE GALVANIZED HOG RINGS FOR TENSION WIRE TIES.~~

~~ALL MATERIAL IN THE CONCRETE BASE AND END POST IS INCLUDED IN THE SUPERSTRUCTURE QUANTITIES.~~

SEE SPECIAL PROVISIONS FOR REQUIREMENTS NOT INCLUDED ON THIS SHEET. ~~AND FOR BASIS OF PAYMENT.~~

(1) PROVIDE PIPE SLEEVE IN SPAN BETWEEN THE VERTICAL POSTS AT EXPANSION JOINT. SEE SUPERSTRUCTURE SHEETS FOR LOCATION.

REVISED: 04-17-2013

APPROVED: DECEMBER 18, 2003

STATE BRIDGE ENGINEER

CERTIFIED BY _____ LICENSED PROFESSIONAL ENGINEER _____ DATE

NAME: LIC. NO.

TITLE: WIRE FENCE (DESIGN W-1) Ⓐ

DES: KR	DR: MSK	APPROVED:
CHK: KJK	CHK: KJK	

SHEET NO. 28 OF 45 SHEETS

FIG. 5-397.119 (MOD.)

BRIDGE NO. R0688

Dec, 11 2015 10:01 am V:\3400_ADC\CAD\SEGMENT E2\PLAN SHEETS\STRUCTURES\R0688\CBRR0688-BRG-DTL-003.dwg By: kevin.kimm

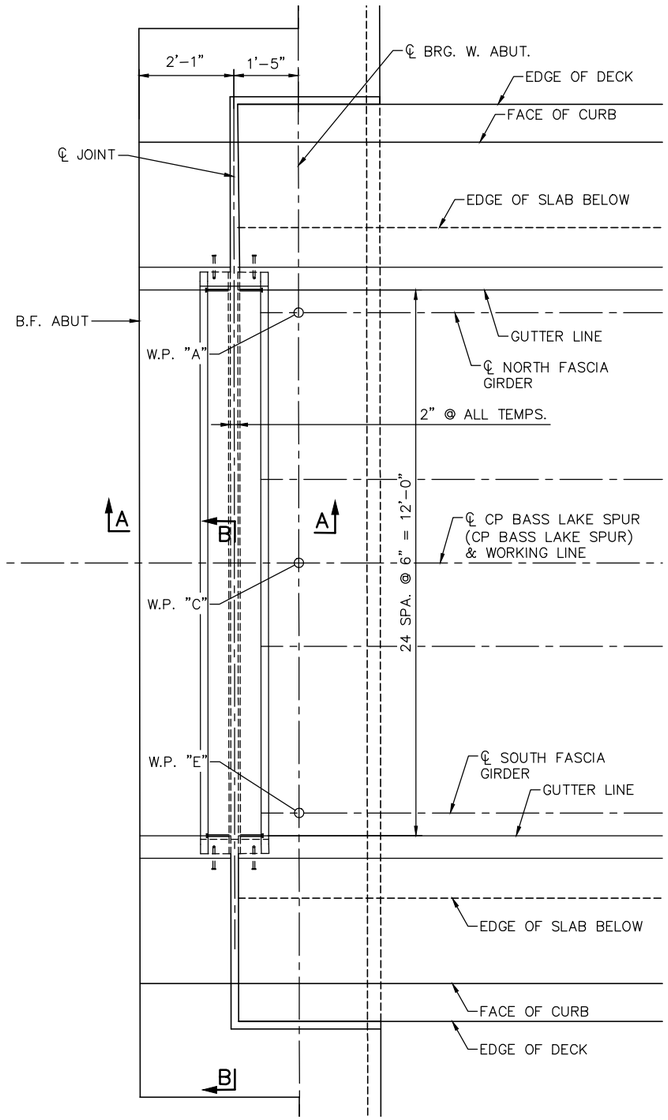

PLAN – EXP JOINT DEVICE AT WEST ABUTMENT

WALK PLATE NOT SHOWN FOR CLARITY

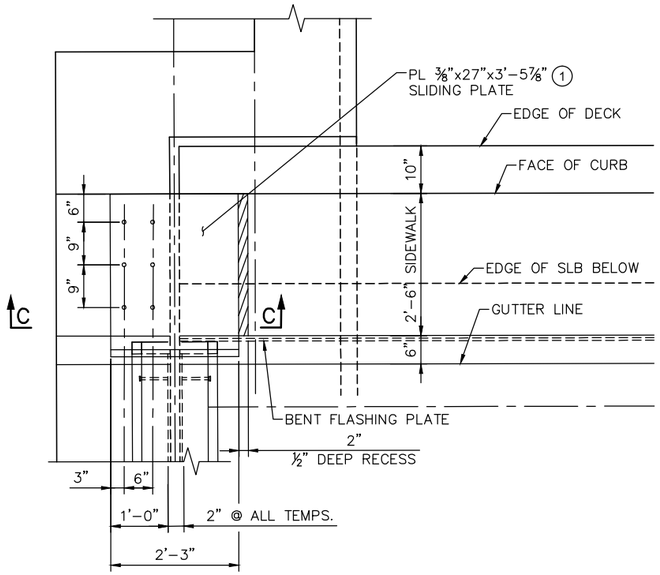

PLAN – SLIDING PLATE AT WEST ABUTMENT

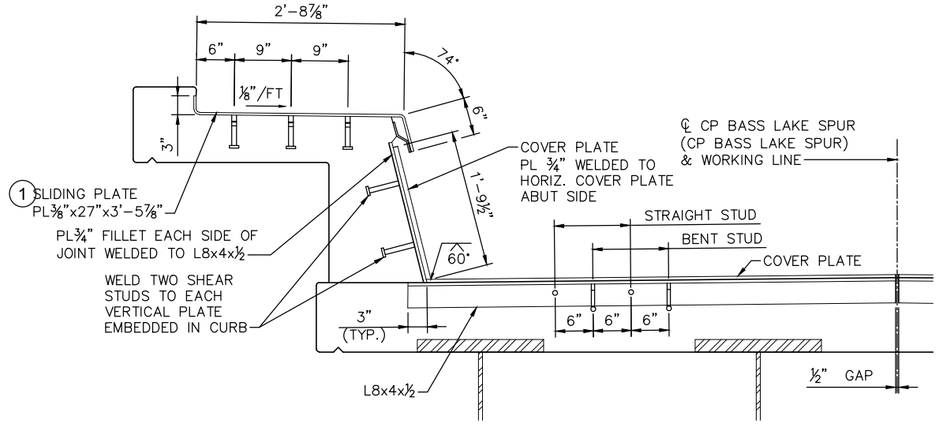

SECTION B–B

NOTES:

(1) RAISED PATTERN PLATE

STEEL NOTE:
ALL STRUCTURAL SHAPES AND PLATES SHOWN ON JOINT DETAIL SHEETS FOR EXP. AND FIXED JOINTS SHALL BE GALVANIZED PER SPEC. 3394. FASTENERS SHALL BE GALVANIZED PER SPEC. 3392

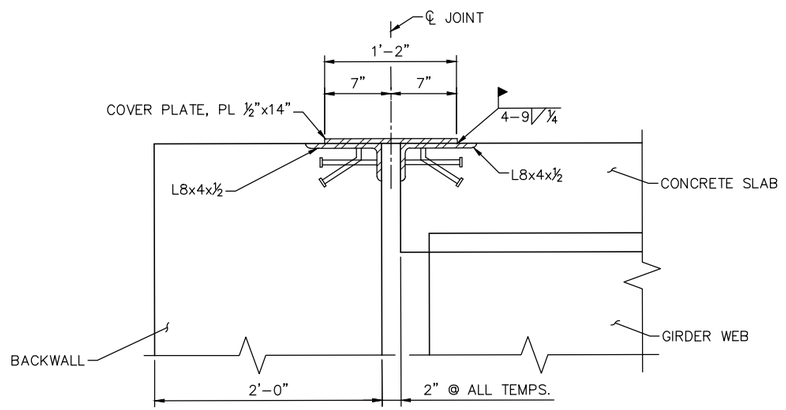

SECTION A–A

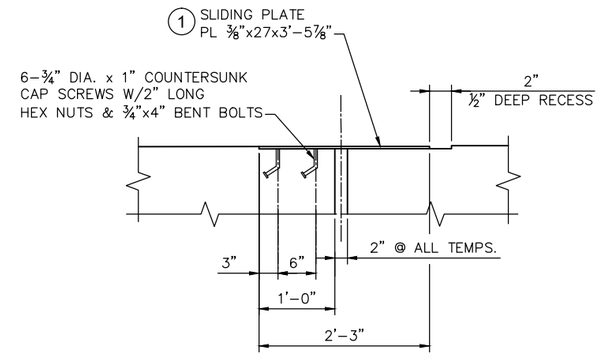

SECTION C–C

NO.	DATE	BY	CHECK	DESIGN	REVISION / SUBMITTAL

DESIGNED BY: KR | CHECKED BY: KJK
DRAWN BY: MSK | CHECKED BY: KJK

AECOM Kimley»Horn

90% SUBMISSION - 01/22/16

METROPOLITAN COUNCIL

SOUTHWEST Green Line LRT Extension

CIVIL - VOLUME 4D
MINNEHAHA CREEK FREIGHT BRIDGE
BRIDGE R0688
JOINT DETAILS 1

DISCIPLINE: STRUCTURES
SHEET NAME: CBRR0688-BRG-EXP-001

SHEET 29 OF 45

Dec, 11 2015 10:02 am v:\3400_ADC\CAD\SEGMENT E2\PLAN SHEETS\STRUCTURES\R0688\CBRR0688-BRG-EXP-001.dwg By: kevin.kimm

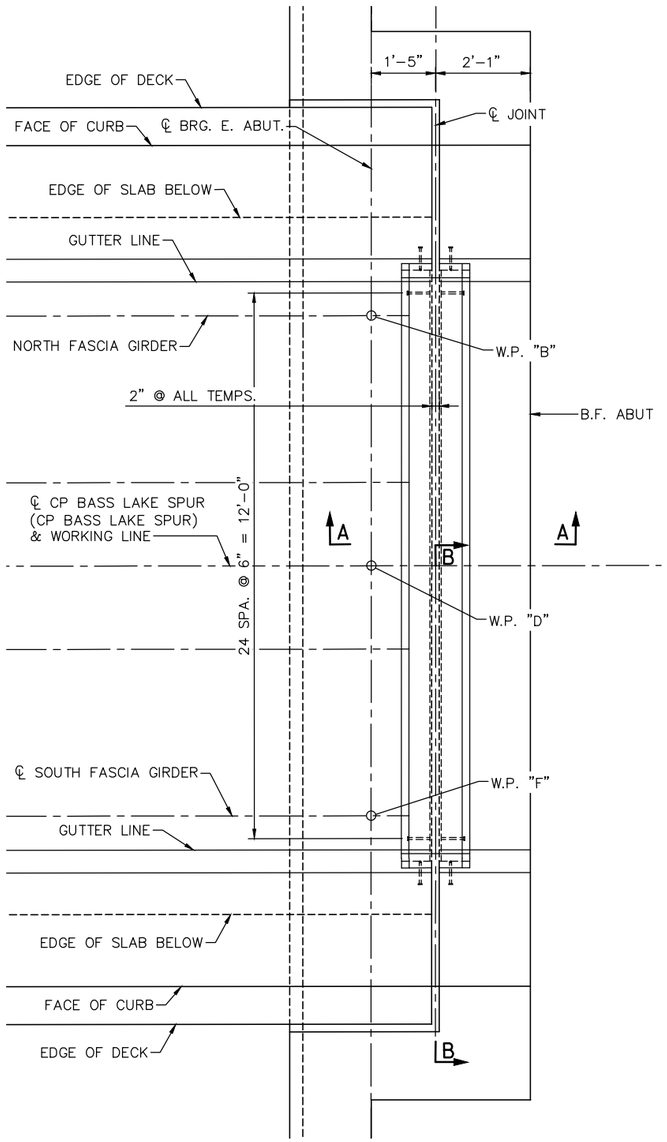

PLAN – FIXED JOINT DEVICE AT EAST ABUTMENT

WALK PLATE NOT SHOWN FOR CLARITY

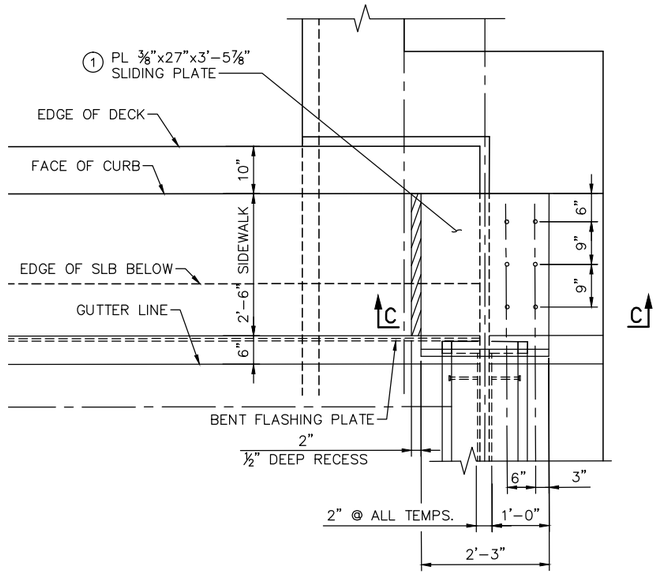

PLAN – SLIDING PLATE AT EAST ABUTMENT

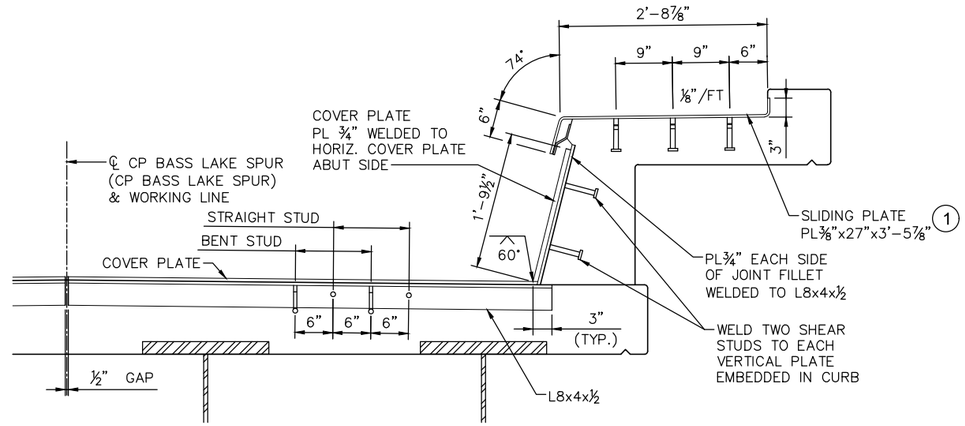

SECTION B–B

NOTES:

① RAISED PATTERN PLATE

STEEL NOTE:
ALL STRUCTURAL SHAPES AND PLATES SHOWN ON JOINT DETAIL SHEETS FOR EXP. AND FIXED JOINTS SHALL BE GALVANIZED PER SPEC. 3394. FASTENERS SHALL BE GALVANIZED PER SPEC. 3392

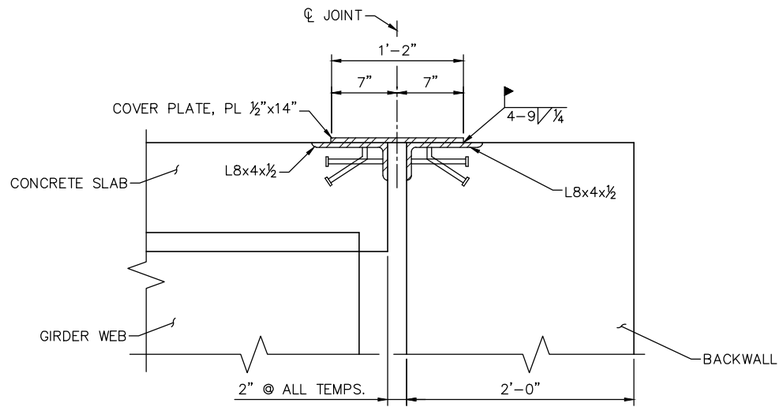

SECTION A–A

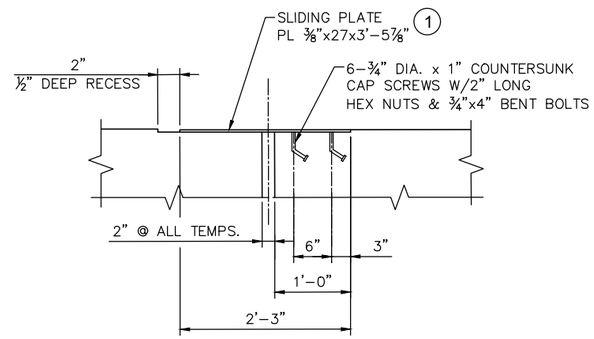

SECTION C–C

NO.	DATE	BY	CHECK	DESIGN	REVISION / SUBMITTAL

DESIGNED BY: KR | CHECKED BY: KJK
DRAWN BY: MSK | CHECKED BY: KJK

AECOM Kimley»Horn

90% SUBMISSION - 01/22/16

METROPOLITAN COUNCIL

SOUTHWEST Green Line LRT Extension

CIVIL - VOLUME 4D
MINNEHAHA CREEK FREIGHT BRIDGE
BRIDGE R0688
JOINT DETAILS 2

DISCIPLINE: STRUCTURES

SHEET NAME: CBRR0688-BRG-EXP-002

SHEET 30 OF 45

Dec, 11 2015 10:03 am V:\3400_ADC\CAD\SEGMENT E2\PLAN SHEETS\STRUCTURES\R0688\CBRR0688-BRG-EXP-002.dwg By: kevin.kimm

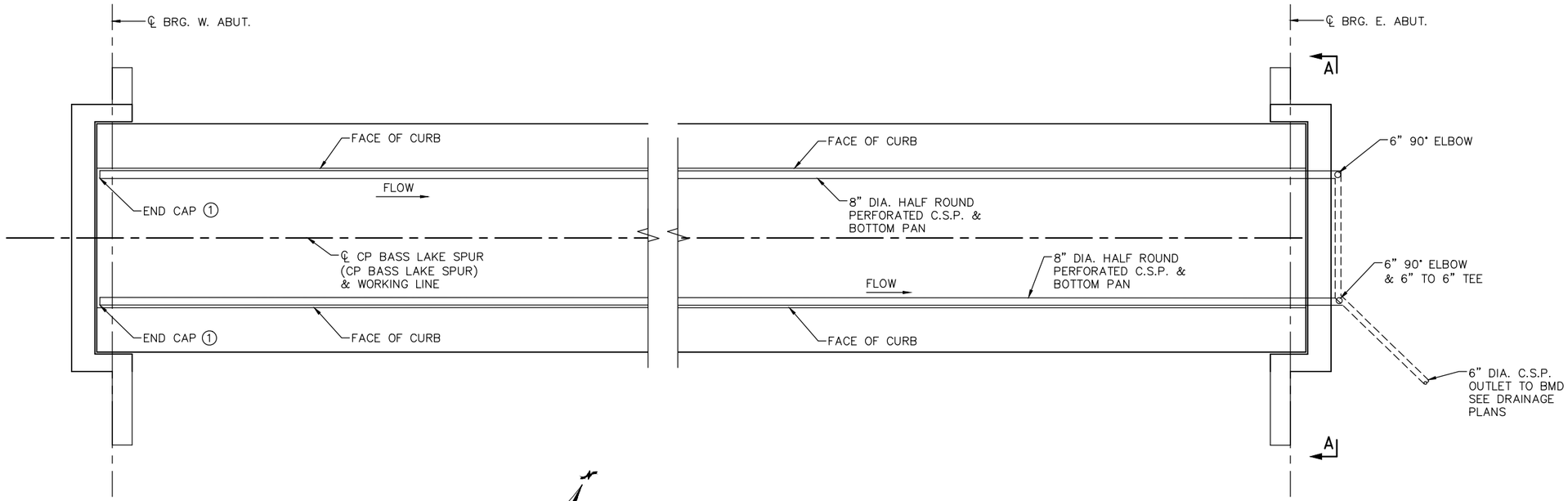

BRIDGE DECK DRAINAGE PLAN

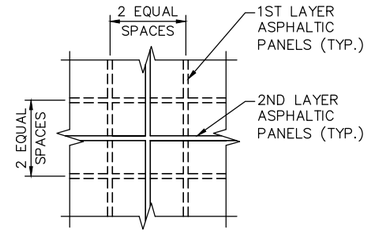

TYPICAL ASPHALT PANEL PLACEMENT

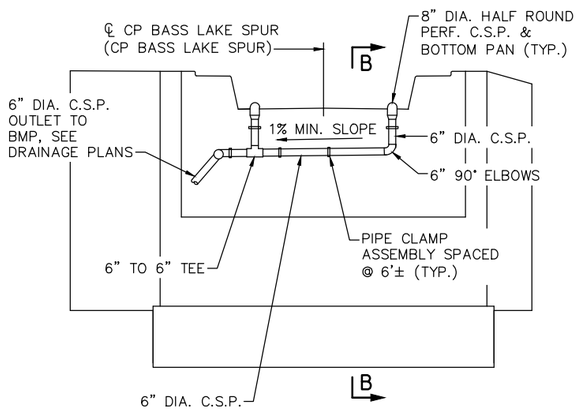

SECTION A–A

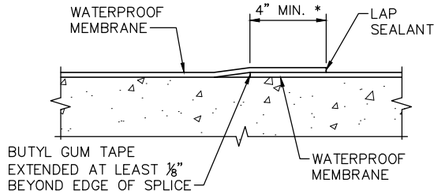

BUTYL RUBBER MEMBRANE WATERPROOFING SPLICE DETAIL

* ALL CONTACT SURFACES TO BE THOROUGHLY CLEANED & CEMENTED

NOTES:

ALL PIPE SHALL COMPLY WITH SPEC. 3326.

ALL STEEL COMPONENTS OF THE DRAINAGE SYSTEM INCLUDING PIPES, BOTTOM PANS, COVERS, CLAMPS, END PLATES, AND HARDWARE SHALL BE GALVANIZED IN ACCORDANCE WITH SPEC. 3392 AND SPEC. 3394.

SEE SHEET 32 FOR SECTION B–B.

ABUTMENT DRAINAGE SHALL BE PER DETAIL B910.

(1) TERMINATE DRAIN AT WEST END OF BRIDGE DECK.

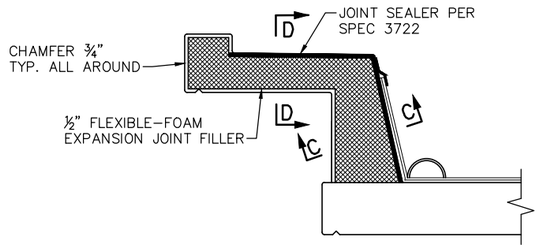

CURB SECTION AT DEFLECTION JOINT

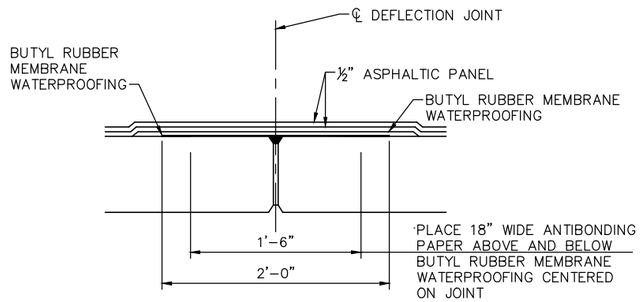

SECTION C–C

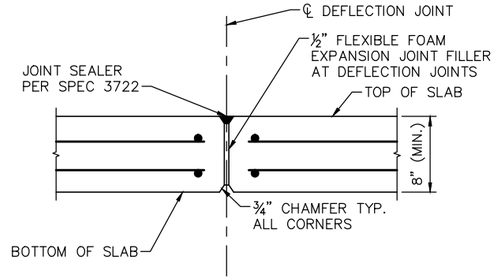

SECTION D–D

NO.	DATE	BY	CHECK	DESIGN	REVISION / SUBMITTAL

DESIGNED BY: KR | CHECKED BY: KJK
DRAWN BY: MSK | CHECKED BY: KJK

AECOM Kimley»Horn

90% SUBMISSION - 01/22/16

METROPOLITAN COUNCIL

SOUTHWEST Green Line LRT Extension

CIVIL - VOLUME 4D
MINNEHAHA CREEK FREIGHT BRIDGE
BRIDGE R0688
DECK DRAINAGE AND WATERPROOFING 1

DISCIPLINE: STRUCTURES
SHEET NAME: CBRR0688-BRG-DTL-004-1

SHEET 31 OF 45

Dec, 11 2015 10:04 am V:\3400_ADC\CAD\SEGMENT E2\PLAN SHEETS\STRUCTURES\R0688\CBRR0688-BRG-DTL-004.dwg By: kevin.kimm

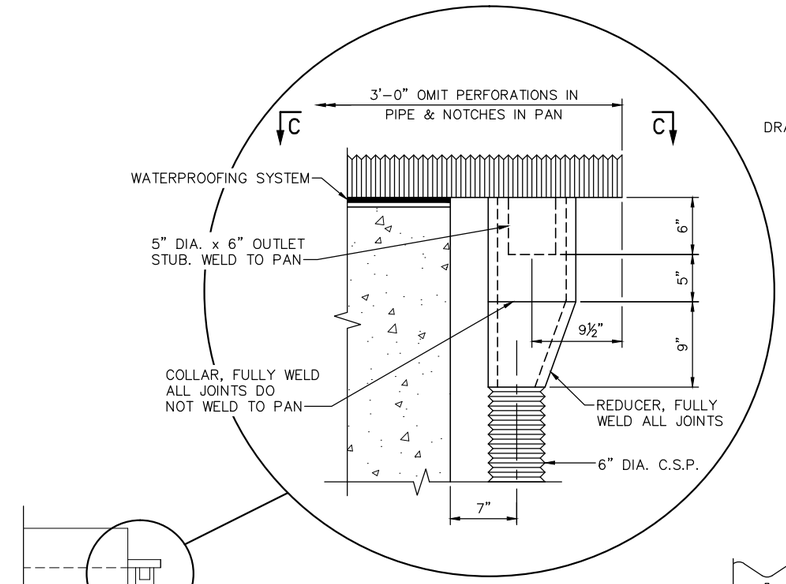

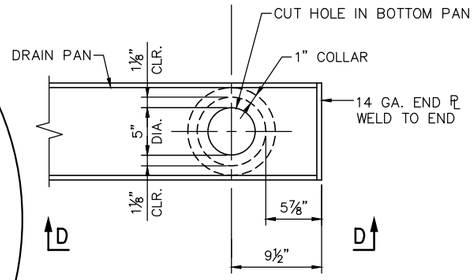

VIEW C–C

(8" DIA. 12 GA. HALF–ROUND C.S.P. NOT SHOWN)

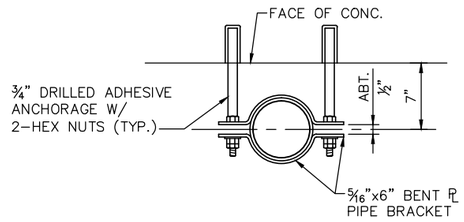

SECTION E–E

(PIPE CLAMP ASSEMBLY)

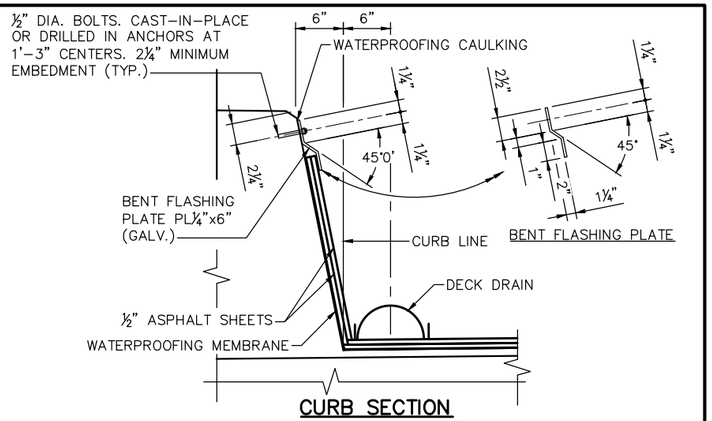

CURB SECTION

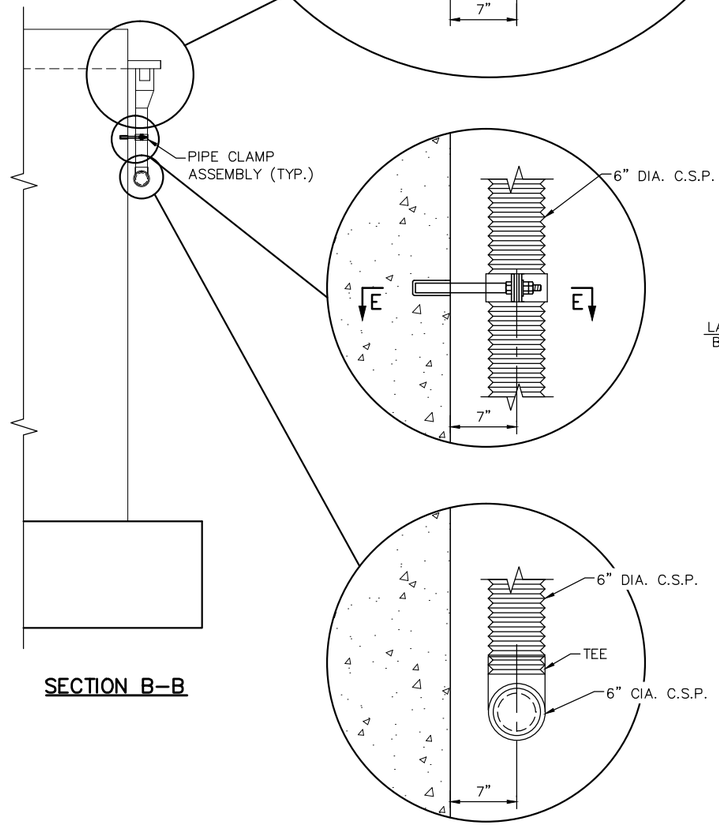

SECTION B–B

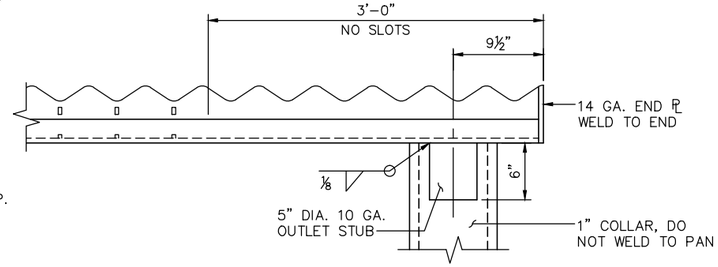

VIEW D–D

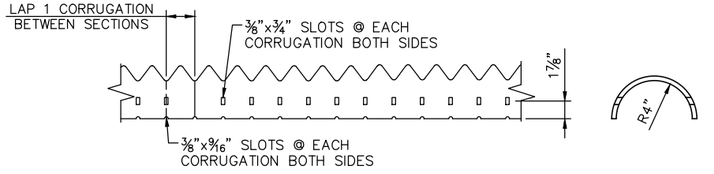

COVER ELEVATION

COVER SECTION

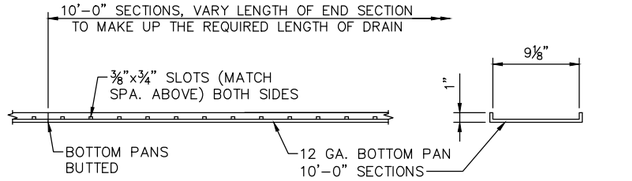

BOTTOM PAN ELEVATION

BOTTOM PAN SECTION

DECK DRAIN DETAILS

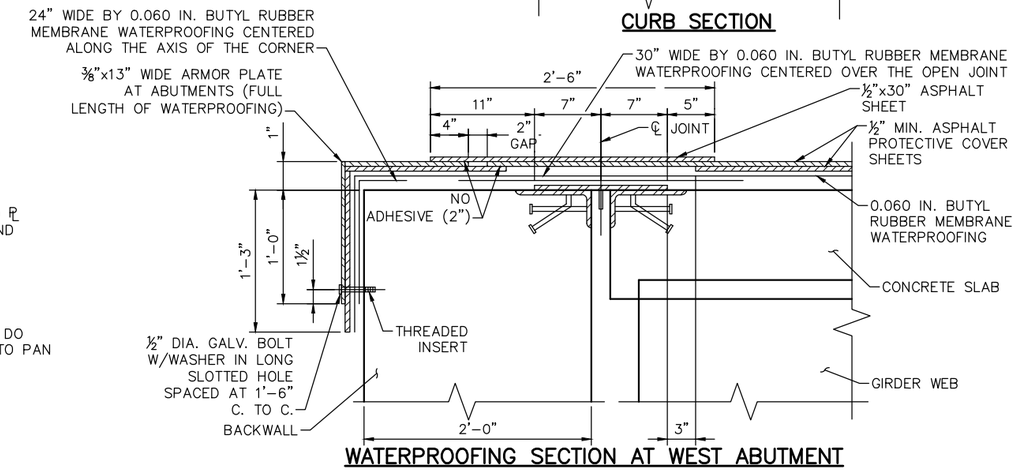

WATERPROOFING SECTION AT WEST ABUTMENT

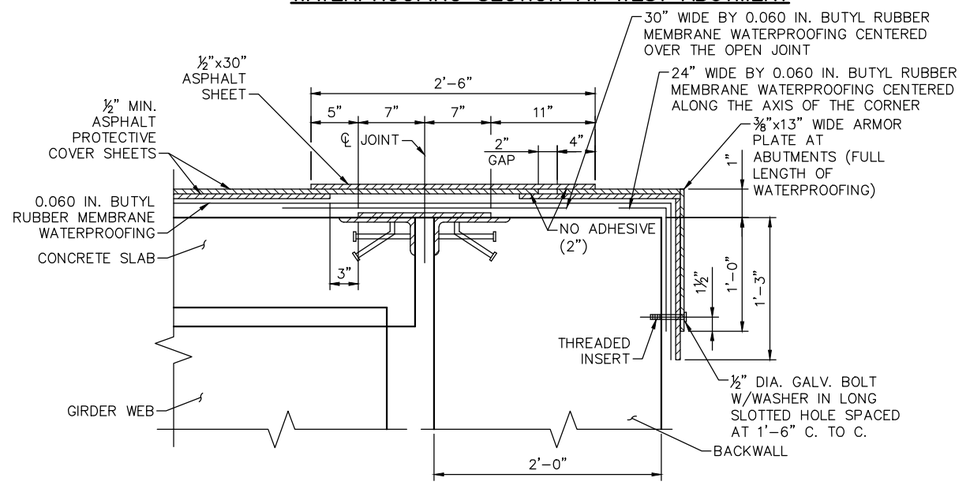

WATERPROOFING SECTION AT EAST ABUTMENT

NO.	DATE	BY	CHECK	DESIGN	REVISION / SUBMITTAL

DESIGNED BY: KR | CHECKED BY: KJK

DRAWN BY: MSK | CHECKED BY: KJK

AECOM Kimley»Horn

90% SUBMISSION - 01/22/16

METROPOLITAN COUNCIL

SOUTHWEST Green Line LRT Extension

CIVIL - VOLUME 4D
MINNEHAHA CREEK FREIGHT BRIDGE
BRIDGE R0688
DECK DRAINAGE AND WATERPROOFING 2

DISCIPLINE: STRUCTURES

SHEET NAME: CBRR0688-BRG-DTL-004-2

SHEET 32 OF 45

Dec, 11 2015 10:04 am V:\3400_ADC\CAD\SEGMENT E2\PLAN SHEETS\STRUCTURES\R0688\CBRR0688-BRG-DTL-004.dwg By: kevin.kimm

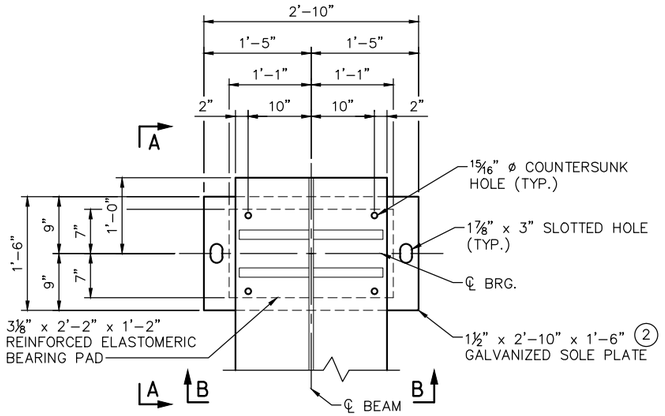

EXPANSION BEARING LAYOUT

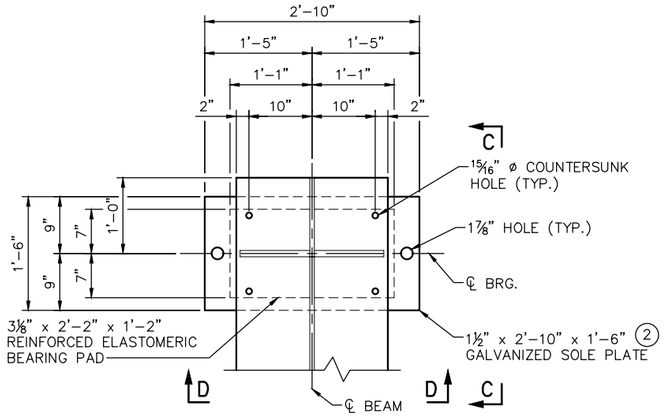

FIXED BEARING LAYOUT

NOTES:

① 5⁄16" ø x 3⁄8" KNOCK OFF WELD STUDS INSTALLED ON SOLE PLATE AROUND PERIMETER OF BEARING PAD. CENTERLINE OF STUD TO EDGE OF PAD DIMENSION IS ½" MAXIMUM. MAXIMUM STUD SPACING IS 4" AND 2" TO THE PAD CORNER.

② GALVANIZED SOLE PLATE SHALL BE STRUCTURAL STEEL (3306) AND GALVANIZED AFTER FABRICATION PER SPEC. 3394, EXCEPT AS NOTED.

ANCHOR RODS SHALL COMPLY WITH SPEC. 3306. GALVANIZE PER SPEC. 3392.

ELASTOMERIC MATERIALS AND PAD CONSTRUCTION SHALL COMPLY WITH MnDOT DPEC. 3741.

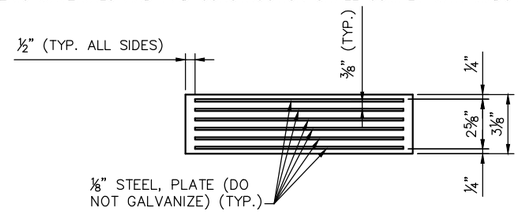

BEARING PAD DETAIL

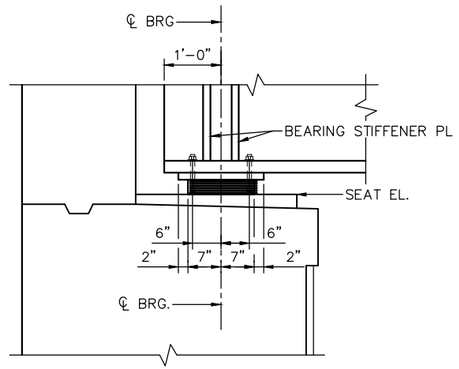

VIEW A–A

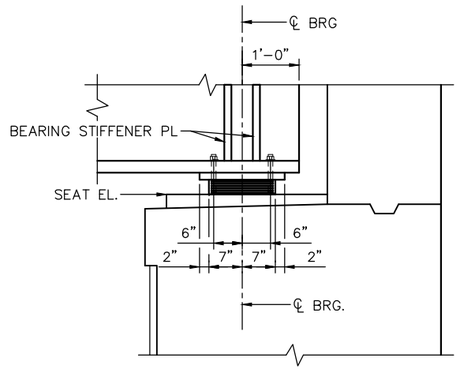

VIEW C–C

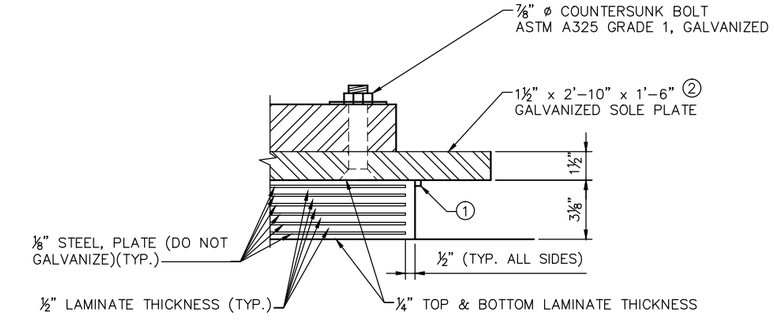

DETAIL "B"

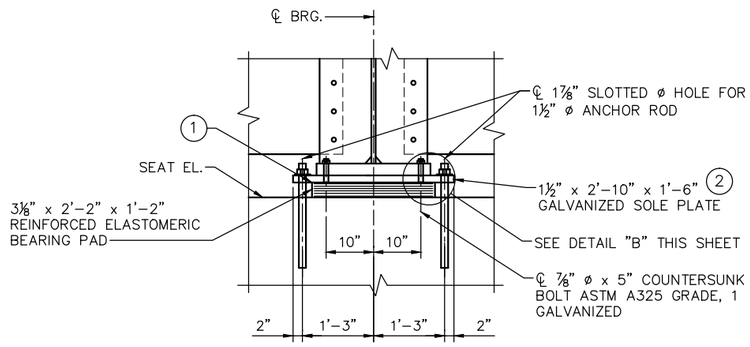

SECTION B–B

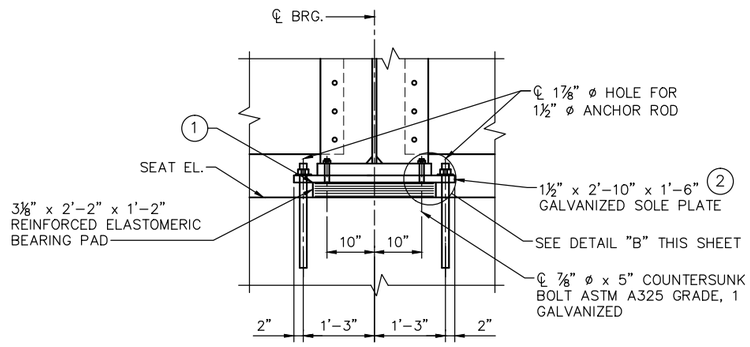

SECTION D–D

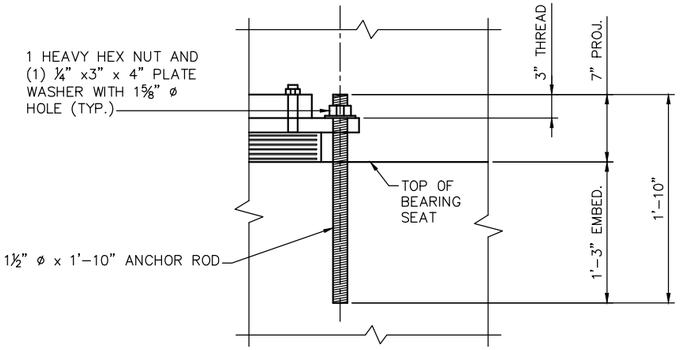

ANCHOR ROD DETAIL

NO.	DATE	BY	CHECK	DESIGN	REVISION / SUBMITTAL

DESIGNED BY: KR | CHECKED BY: KJK
DRAWN BY: MSK | CHECKED BY: KJK

AECOM Kimley»Horn

90% SUBMISSION - 01/22/16

METROPOLITAN COUNCIL

SOUTHWEST Green Line LRT Extension

CIVIL - VOLUME 4D
MINNEHAHA CREEK FREIGHT BRIDGE
BRIDGE R0688
BEARING ASSEMBLY DETAILS

DISCIPLINE: STRUCTURES
SHEET NAME: CBRR0688-BRG-EXP-003

SHEET 33 OF 45

Dec, 11 2015 10:05 am V:\3400_ADC\CAD\SEGMENT E2\PLAN SHEETS\STRUCTURES\R0688\CBRR0688-BRG-EXP-003.dwg By: kevin.kimm

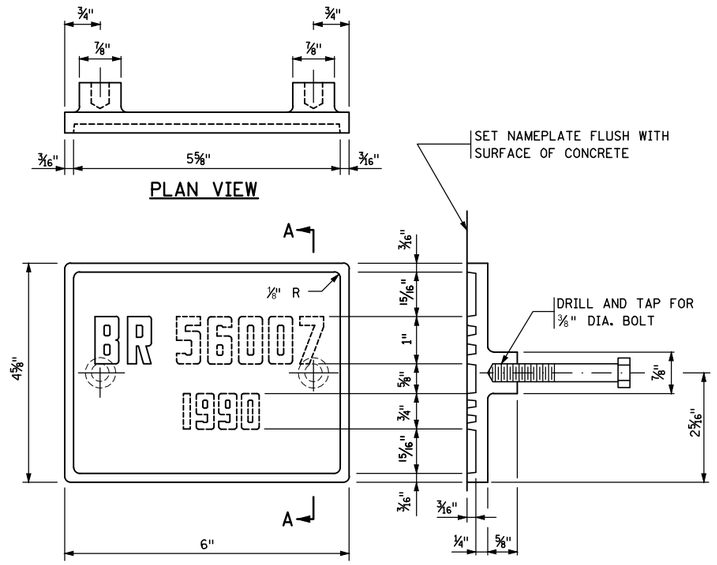

THE DASHED NUMBERS SHOWN ABOVE ARE FOR ILLUSTRATION.
DATA TO BE SHOWN ON NAMEPLATE IS AS FOLLOWS:

BRIDGE R0688

YEAR ①



NUMBERS FOR NAMEPLATE

NOTES:

MATERIAL SHALL COMPLY WITH SPEC. 3327.

LETTERS AND NUMBERS SHALL CONFORM TO THOSE SHOWN.

DRAFT ON LETTERS AND NUMBERS SHALL NOT BE MORE THAN 3" IN 12".

HORIZONTAL SPACING OF LETTERS AND NUMBERS SHALL PRODUCE A BALANCED LAYOUT IN PROPORTION TO SPACING SHOWN.

TOP SURFACE OF LETTERS, NUMBERS AND FRAMES SHALL BE BURNISHED.

FURNISH 2 STEEL BOLTS ⅜" DIA. × 3" LONG WITH EACH PLATE.

ALL DIMENSIONS FOR ¾" HIGH LETTERS AND NUMBERS SHALL BE IN DIRECT PROPORTION TO THOSE SHOWN FOR THE 1" HIGH LETTERS AND NUMBERS.

① YEAR OF CONSTRUCTION

APPROVED: NOVEMBER 22, 2002	STATE OF MINNESOTA DEPARTMENT OF TRANSPORTATION	REVISION 09-11-2014	DETAIL NO.
Daniel L Hergan STATE BRIDGE ENGINEER	BRIDGE NAMEPLATE (FOR NEW BRIDGES)		B101

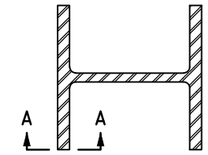

SECTION AT SPLICE

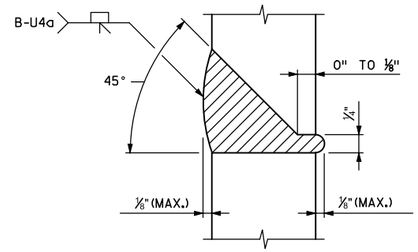

SECTION A-A

100% BUTT WELDED PILE SPLICE

NOTES:

CELLULOSIC TYPE ELECTRODES E-6010 OR E-6011 SHALL BE USED FOR 100% BUTT WELDED SPLICES.

ELECTRODES WHICH HAVE BECOME WET, SOILED OR DAMAGED SHALL NOT BE USED.

WELDING SHALL NOT BE DONE WHEN THE AMBIENT TEMPERATURE IS LOWER THAN 0° F. OR WHEN THE PILE IS WET OR EXPOSED TO FALLING RAIN OR SNOW. WHEN THE PILE METAL TEMPERATURE IS BELOW 32° F., THE PILE METAL IN THE AREA OF THE WELD SHALL BE HEATED TO A MINIMUM TEMPERATURE OF 70° F. AND MAINTAINED AT THIS TEMPERATURE DURING WELDING.

APPROVED: NOVEMBER 22, 2002	STATE OF MINNESOTA DEPARTMENT OF TRANSPORTATION	REVISION: 11-06-2013	DETAIL NO.
Daniel L Hergan STATE BRIDGE ENGINEER	PILE SPLICE (STEEL H BEARING PILES 10" TO 14")		B202

NO.	DATE	BY	CHECK	DESIGN	REVISION / SUBMITTAL

DESIGNED BY: KR CHECKED BY: KJK
DRAWN BY: MSK CHECKED BY: KJK

AECOM Kimley»Horn

90% SUBMISSION - 01/22/16

METROPOLITAN COUNCIL

SOUTHWEST Green Line LRT Extension

CIVIL - VOLUME 4D
MINNEHAHA CREEK FREIGHT BRIDGE
BRIDGE R0688
BRIDGE DETAILS 1

DISCIPLINE: STRUCTURES
SHEET NAME: CBRR0688-BRG-DTL-005

SHEET 34 OF 45

Dec. 11 2015 10:06 am V:\3400_ADC\CAD\SEGMENT E2\PLAN SHEETS\STRUCTURES\R0688\CBRR0688-BRG-DTL-005.dwg By: kevin.kimm

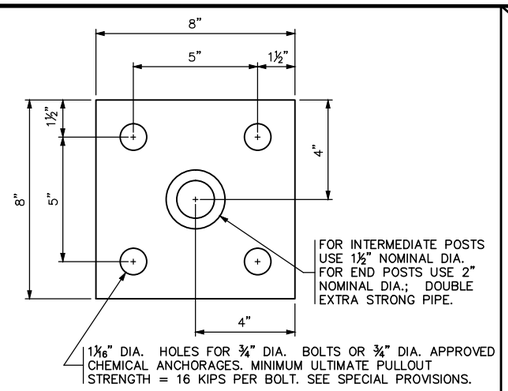

PLAN VIEW – TYPE A

ESTIMATED WEIGHT = 12 OR 14 LBS.

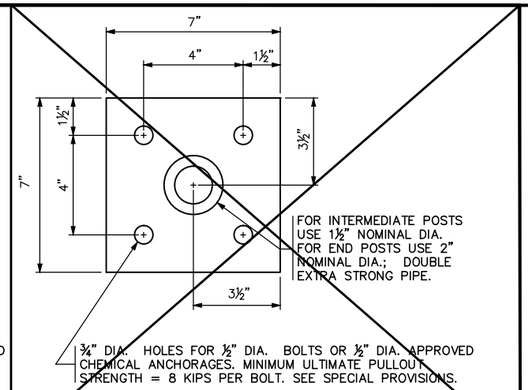

PLAN VIEW – TYPE B

ESTIMATED WEIGHT = 10 OR 12 LBS.

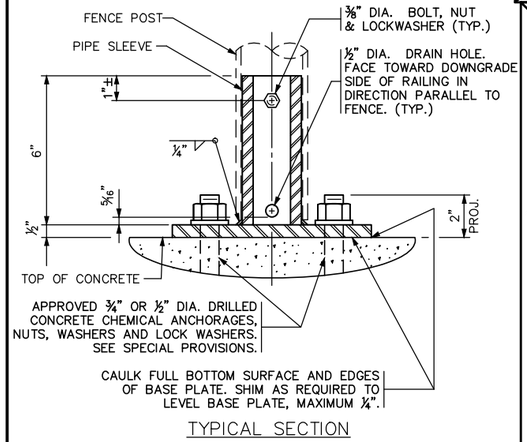

TYPICAL SECTION

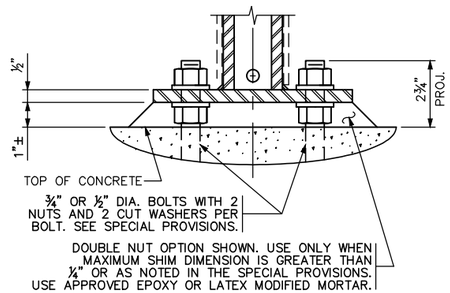

GROUT ALTERNATE

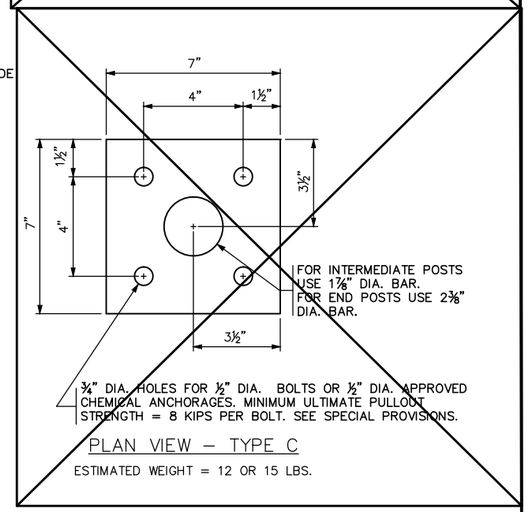

PLAN VIEW – TYPE C

ESTIMATED WEIGHT = 12 OR 15 LBS.

NOTES:

STRUCTURAL STEEL PER Mn/DOT SPEC. 3306

STRUCTURAL PIPE PER Mn/DOT SPEC. 3362

GALVANIZE THE FENCE POST ANCHORAGE AFTER FABRICATION PER Mn/DOT SPEC. 3394. GALVANIZE THE FASTENERS PER Mn/DOT SPEC. 3392.

DOUBLE EXTRA STRONG PIPE WEIGHTS:
1½" NOMINAL DIA. = 6.41 LBS./FT.
2" NOMINAL DIA. = 9.03 LBS./FT.

APPROVED: NOVEMBER 22, 2002	STATE OF MINNESOTA DEPARTMENT OF TRANSPORTATION	REVISION	DETAIL NO.
Daniel D. Dorgan STATE BRIDGE ENGINEER	FENCE POST ANCHORAGE		B905

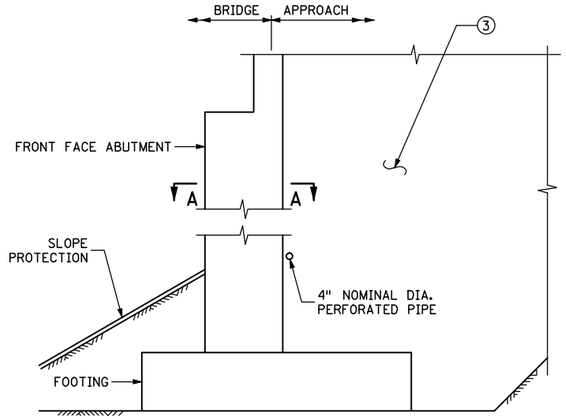

SECTION THROUGH PARAPET AND SEMI-INTEGRAL ABUTMENTS

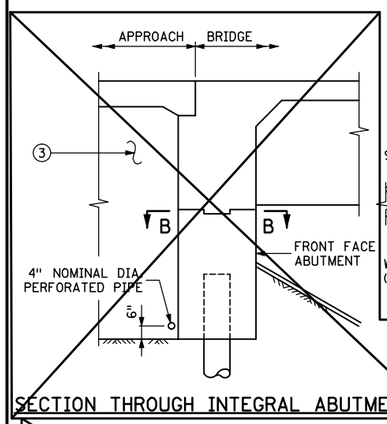

SECTION THROUGH INTEGRAL ABUTMENT

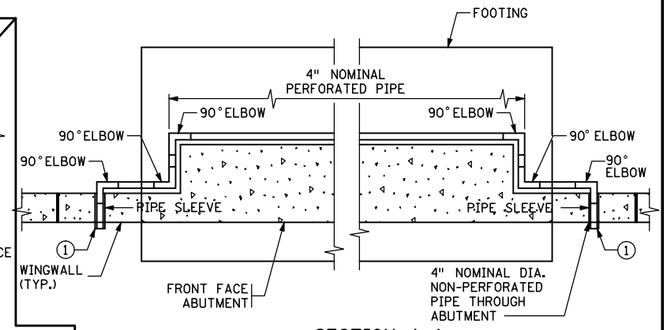

SECTION A-A

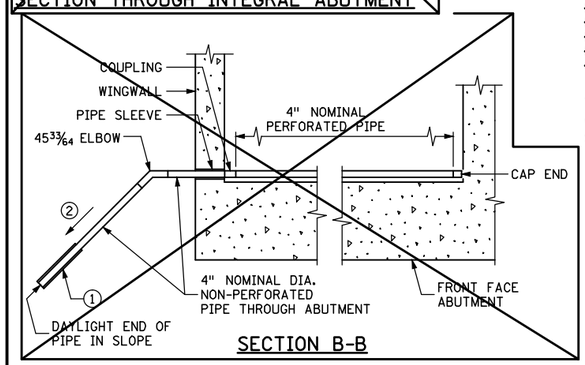

SECTION B-B

NOTES:

~~PAYMENT WILL BE INCLUDED IN THE SINGLE LUMP SUM PRICE FOR "DRAINAGE SYSTEM TYPE (B910)", INCLUDES, BUT IS NOT LIMITED TO 4" DIAMETER PERFORATED AND NON-PERFORATED PIPE, ELBOWS, END CAPS, COUPLINGS, SLEEVES AND PRECAST CONCRETE HEADWALLS.~~

ALL PIPE TO COMPLY WITH SPEC. 3245.

WRAP PERFORATED PIPE WITH GEOTEXTILE PER SPEC. 3733, TYPE 1. ATTACH TO PIPE PER SPEC. 2502.

(1) AT CONTRACTORS OPTION, MAY TIE APPROACH PANEL DRAINAGE SYSTEM AND ABUTMENT DRAINAGE SYSTEM INTO A SINGLE PRECAST CONCRETE HEADWALL OR INTO A CATCH BASIN AS LONG AS A MINIMUM OF 1% POSITIVE SLOPE CAN BE MANTAINED.

USE PRECAST CONCRETE HEADWALL WITH RODENT SCREEN. SEE STANDARD PLATE 3131 FOR DETAILS.

(2) ⅛" PER FT. MINIMUM SLOPE.

(3) REFER TO GRADING PLANS FOR ABUTMENT BACKFILL REQUIREMENTS.

APPROVED: JANUARY 13, 2015	STATE OF MINNESOTA DEPARTMENT OF TRANSPORTATION	REVISED	DETAIL NO.
Nancy J. Daubenberger STATE BRIDGE ENGINEER	DRAINAGE SYSTEM		B910 (MOD.)

NO.	DATE	BY	CHECK	DESIGN	REVISION / SUBMITTAL

DESIGNED BY: KR CHECKED BY: KJK
DRAWN BY: MSK CHECKED BY: KJK

AECOM Kimley»Horn

90% SUBMISSION - 01/22/16

METROPOLITAN COUNCIL

SOUTHWEST Green Line LRT Extension

CIVIL - VOLUME 4D
MINNEHAHA CREEK FREIGHT BRIDGE
BRIDGE R0688
BRIDGE DETAILS 2

DISCIPLINE: STRUCTURES
SHEET NAME: CBRR0688-BRG-DTL-006

SHEET 35 OF 45

Dec, 11 2015 10:07 am V:\3400_ADC\CAD\SEGMENT E2\PLAN SHEETS\STRUCTURES\R0688\CBRR0688-BRG-DTL-006.dwg By: kevin.kimm

CONCRETE WEARING COURSE

☐ LOW SLUMP

☐ OTHER _____
TYPE OR MANUFACTURER

EXPANSION JOINTS

JOINT MANUFACTURER

MANUFACTURER'S IDENTIFICATION _____
MFR'S No. AND/OR LETTER DESIGNATION FOR JOINT USED

GLAND MANUFACTURER _____
NAME AND ADDRESS (CITY, STATE)

SIZE OF GLAND _____

MANUFACTURER'S IDENTIFICATION _____
MFR'S No. AND/OR LETTER DESIGNATION FOR GLAND USED

ELASTOMERIC BEARING PADS

PAD MANUFACTURER _____
NAME AND ADDRESS (CITY, STATE)

SPECIAL SURFACE FINISH

SYSTEM: _____ COLOR: _____

FINISHING ROADWAY FACES OF BARRIER RAILING

TYPE: _____ COLOR: _____

ANTI–GRAFFITI COATING

MANUFACTURER _____
NAME AND ADDRESS (CITY, STATE)

PRODUCT NAME: _____ LOCATION: _____

PAINT SYSTEM

Mn/DOT SPECIFICATION NUMBER _____
2478 OR 2479 OR OTHER

MANUFACTURER _____
NAME AND ADDRESS (CITY, STATE)

PRIME COAT _____
Mn/DOT MATERIAL SPECIFICATION NUMBER

INTERMEDIATE COAT _____
Mn/DOT MATERIAL SPECIFICATION NUMBER

FINISH COAT _____ _____
Mn/DOT MATERIAL SPECIFICATION NUMBER COLOR

PLAN QUALITY

RATE 1 (AGREE), 2 (NEUTRAL), OR 3 (DISAGREE, PLEASE COMMENT BELOW)

DIMENSIONING AND DETAILING ADEQUATELY DESCRIBED REQUIRED CONSTRUCTION. _____
BAR LISTS AND QUANTITIES WERE TYPICALLY COMPLETE AND FREE OF ERRORS. _____
SCALE OF DRAWINGS AND OVERALL LEGIBILITY OF LINES AND TEXT WAS GOOD. _____
(SB) SPECIAL PROVISIONS ADEQUATELY DESCRIBED SPECIAL WORK AND PAYMENT. _____

COMMENTS: _____

NUMBER OF BRIDGE
SUPPLEMENTAL AGREEMENTS: _____ COST: $ _____

LIST SIGNIFICANT ERRORS OR OMISSIONS IN PLAN DETAILS OR PAY QUANTITIES IN THE SPACE PROVIDED AT RIGHT.

BRIDGE REMOVAL / BRIDGE OPENING

NUMBER OF AND DATE OLD BRIDGE WAS REMOVED (IF APPLICABLE):

BRIDGE NUMBER _____ DATE REMOVED _____

DATE NEW BRIDGE WAS OPENED TO TRAFFIC _____

NOTIFY THE BRIDGE OFFICE BRIDGE MANAGEMENT UNIT WITH THIS INFORMATION AS SOON AS POSSIBLE. (651) 366–4557

OTHER ITEMS ①

① UTILITIES ADDED DURING CONSTRUCTION AND SPECIALTY ITEMS.

FINAL QUANTITIES ENTERED ON SCHEDULE OF QUANTITIES: YES ☐ NO ☐

SUMMARY OF SIGNIFICANT AS–BUILT CHANGES

THE AS–BUILT INFORMATION WAS ADDED TO THE PLAN BY:

_____ _____
INSPECTOR(S) SIGNATURE DATE

CHECKED BY: _____ _____
PROJECT ENGINEER/SUPERVISOR SIGNATURE DATE

AT THE TIME OF THE FINAL, THIS COMPLETED AS–BUILT BRIDGE DATA SHEET MUST BE SUBMITTED TO THE BRIDGE OFFICE – ATTN: REGIONAL CONSTRUCTION ENGINEER (MS610).

REVISION: 10–28–2008

APPROVED: SEPTEMBER 26, 2003
STATE BRIDGE ENGINEER

AS–BUILT DETAILS
(AS NEEDED)

FIG. 5–397.900

TITLE:	DES:	DR:	APPROVED:	BRIDGE NO.
AS–BUILT BRIDGE DATA	CHK:	CHK:		R0688
	SHEET NO. 36 OF 45 SHEETS			

Dec, 14 2015 02:00 pm V:\3400_ADC\CAD\SEGMENT E2\PLAN SHEETS\STRUCTURES\R0688\CBRR0688-BRG-DTL-007.dwg By: charlie.golek

CONTRACTED PROFILE

SCALE HOR: 0 50'

SCALE VER: 0 10'

PROFILE GRADE CP BASS LAKE SPUR (FG–CP BASS LAKE SPUR)

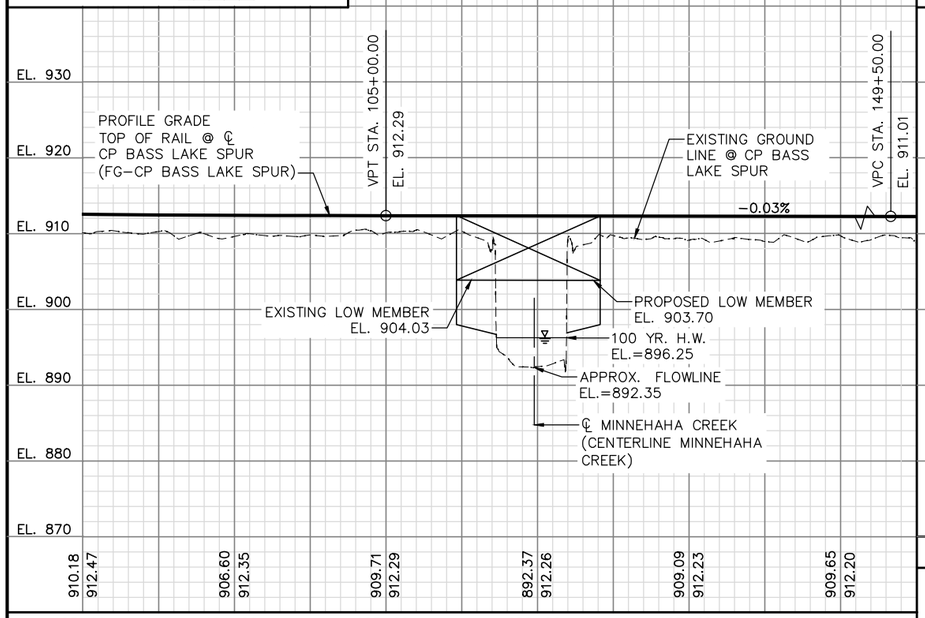

CONTRACTED PROFILE

SCALE HOR: 0 50'

SCALE VER: 0 10'

PROFILE GRADE MINNEHAHA CREEK (CENTERLINE MINNEHAHA CREEK)

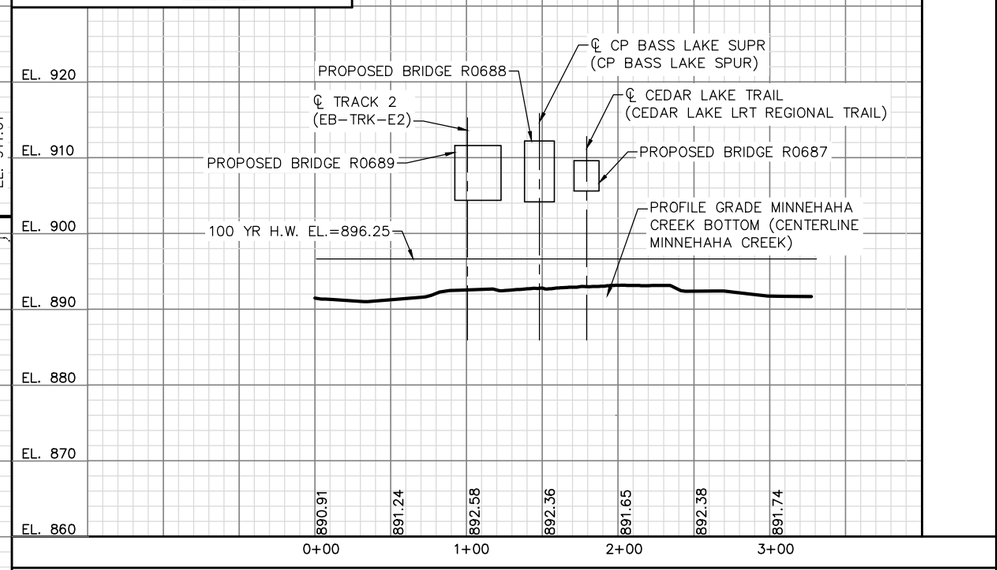

PLAT

SCALE: 0 50'

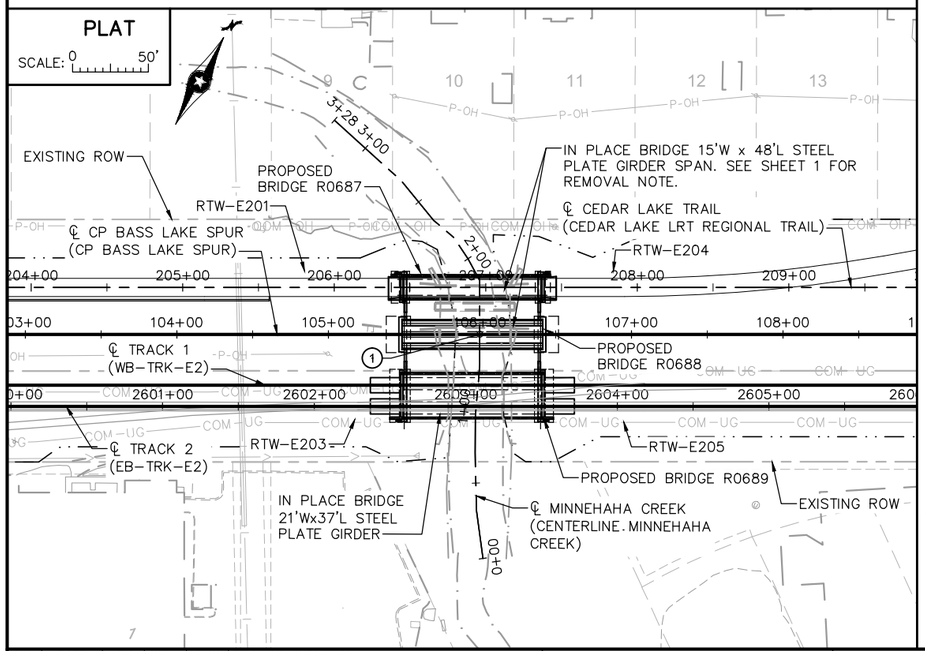

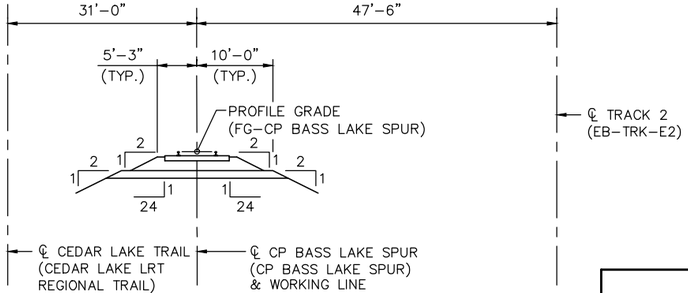

TYPICAL CP BASS LAKE SPUR APPROACH SECTION AT MINNEHAHA

NOTES:

(1) CONTROL POINT
℄ CP BASS LAKE SPUR (CP BASS LAKE SPUR) STA. 105+99.86
℄ MINNEHAHA CREEK (CENTERLINE MINNEHAHA CREEK) STA. 1+48.18
X = 501346.351
Y = 150920.901

THE SUBSURFACE UTILITY INFORMATION IN THIS PLAN IS UTILITY QUALITY LEVEL D. THIS UTILITY QUALITY LEVEL WAS DETERMINED ACCORDING TO GUIDELINES OF CI/ASCE 38–02, ENTITLED "STANDARD GUIDELINES FOR THE COLLECTION AND DEPICTION OF EXISTING SUBSURFACE UTILITY DATA."

INDEX MAP (1.5 SQUARE MILE)

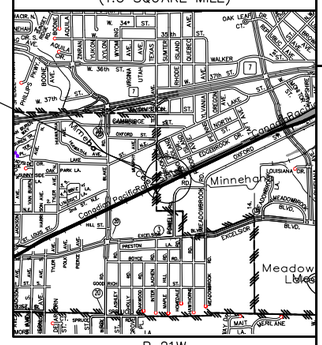

LOCATION ENGINEER'S OBSERVATIONS AT BRIDGE SITE

1. SPECIAL FEATURES: WATERFALLS, DAMS, FLOODS, ICE, DEBRIS SLIDING BANKS, RECREATIONAL BOATING.
2. OTHER BRIDGES OR CULVERTS OVER THE SAME STREAM (PARTICULARY STRUCTURES WHICH CARRY HIGH WATER WITHOUT OVERFLOW OF ROADWAY): GIVEN LOCATION, TYPE, LENGTH, HEIGHT ABOVE HIGH WATER, CROSS–SECTIONAL AREA ETC.
3. APPARENT HIGHWATER ELEVATION OBTAINED FROM:
4. OTHER DATA: APPROX. VELOCITY OF WATER AT TIME OF SURVEY.

HYDRAULIC ENGINEER'S RECOMMENDATION

DATE: DECEMBER 2015

STREAM OR DITCH DESIGNATION: MINNEHAHA CREEK

DRAINAGE AREA: 138 SQ. MI.

MAX FLOOD ON RECORD: UNKNOWN

DESIGN FLOOD (100 YR. FREQ.): 865 C.F.S.
HEADWATER ELEVATION: 896.25 FT.
DESIGN MEAN VELOCITY THROUGH STRUCTURE 5.54 F.P.S.
TOTAL STAGE INCREASE 0.0 FT.
LOW MEMBER AT OR ABOVE ELEVATION 898.50 FT.

WATERWAY AREA REQUIRED BELOW ELEV. 896.25 = 156.24 SQ. FT. AT RIGHT ANGLES TO CHANNEL

BASIC FLOOD (100 YR. FREQ.) 865 C.F.S.
HEADWATER ELEVATION: 896.25 FT.
TOTAL STAGE INCREASE FT. 0.0
MEAN VELOCITY THROUGH STRUCTURE 5.54 F.P.S.

FLOWLINE ELEVATION: 892.35 FT. SKEW ANGLE: 0 DEG.

ESTIMATED PRELIMINARY TOTAL SCOUR AT ABUT. ELEV. 888.67 (500YR. FREQ.)

SCOUR CONFIRMATION RECOMMENDATION

DATE: DECEMBER 2015

TOTAL SCOUR AT ABUT. ELEV. 888.67 (500 YR. FREQ.)
SCOUR CODE: L

BRIDGE SURVEY SHEETS MADE FROM 2014 MFRA SURVEYS

1ST BENCH MARK (NAVD88)
ELEVATION: 913.20
NORTHING: 150917.04
EASTING: 501306.42
DESCRIPTION: MAG NAIL IN BIT.

2ND BENCH MARK (NAVD88)
ELEVATION: 912.78
NORTHING: 150966.60
EASTING: 501408.21
DESCRIPTION: MAG NAIL IN BIT.

BRIDGE SURVEY

CP BASS LAKE SPUR OVER MINNEHAHA CREEK
FREIGHT BRIDGE
1.7 MI. S.W. OF JCT. T.H. 7 & T.H. 100
IN ST. LOUIS PARK

SEC 20 T 117N R 21W

CITY OF ST. LOUIS PARK HENNEPIN COUNTY

BRIDGE R0688

NO.	DATE	BY	CHECK	DESIGN	REVISION / SUBMITTAL

DESIGNED BY: KR CHECKED BY: KJK
DRAWN BY: MSK CHECKED BY: KJK

AECOM Kimley»Horn

90% SUBMISSION - 01/22/16

METROPOLITAN COUNCIL

SOUTHWEST Green Line LRT Extension

CIVIL - VOLUME 4D
MINNEHAHA CREEK FREIGHT BRIDGE
BRIDGE R0688
BRIDGE SURVEY

DISCIPLINE: STRUCTURES

SHEET NAME: CBRR0688-BRG-SUR-001

SHEET 37 OF 45

Dec, 11 2015 10:16 am V:\3400_ADC\CAD\SEGMENT E2\PLAN SHEETS\STRUCTURES\R0688\CBRR0688-BRG-SUR-001.dwg By: kevin.kimm

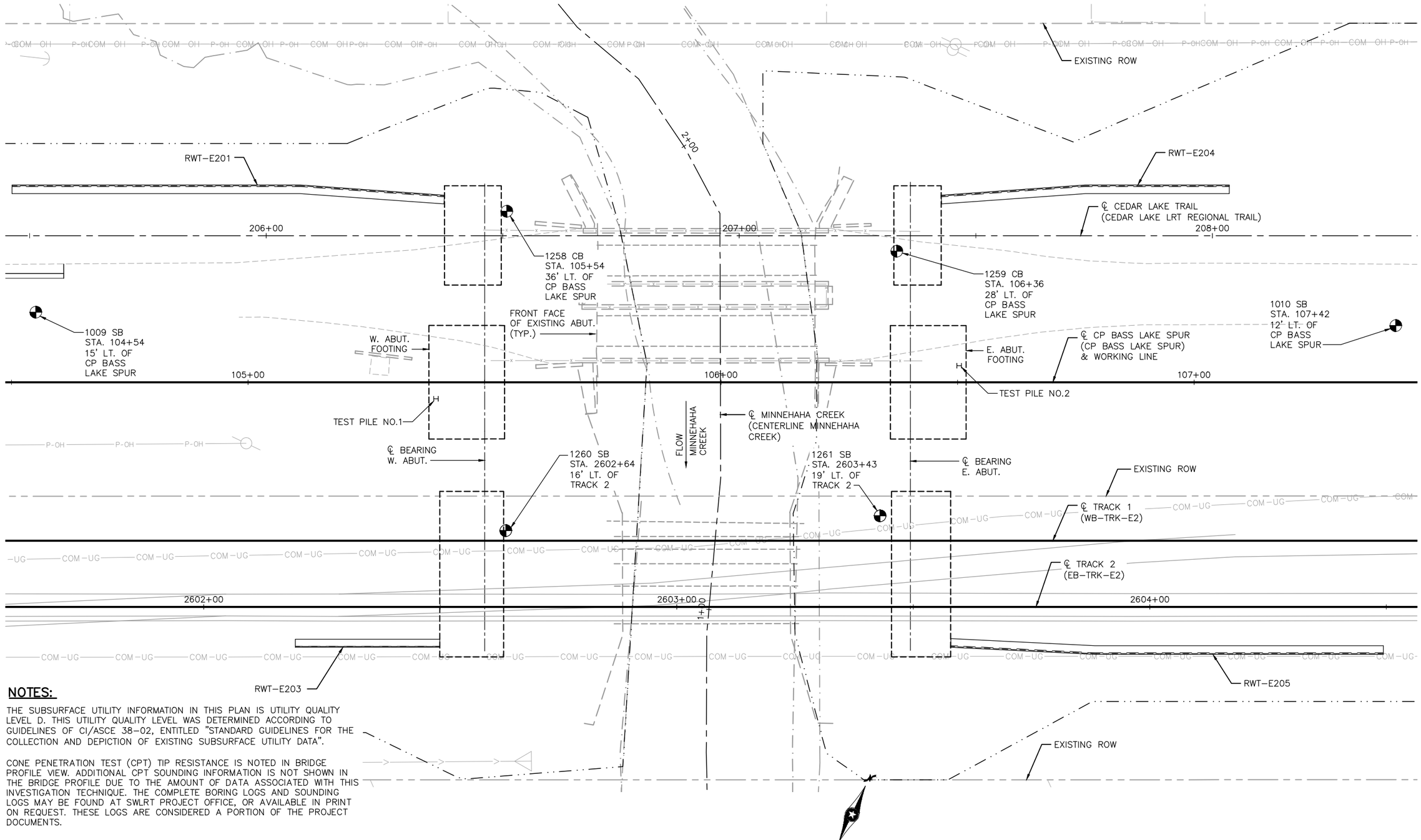

NOTES:

THE SUBSURFACE UTILITY INFORMATION IN THIS PLAN IS UTILITY QUALITY LEVEL D. THIS UTILITY QUALITY LEVEL WAS DETERMINED ACCORDING TO GUIDELINES OF CI/ASCE 38–02, ENTITLED "STANDARD GUIDELINES FOR THE COLLECTION AND DEPICTION OF EXISTING SUBSURFACE UTILITY DATA".

CONE PENETRATION TEST (CPT) TIP RESISTANCE IS NOTED IN BRIDGE PROFILE VIEW. ADDITIONAL CPT SOUNDING INFORMATION IS NOT SHOWN IN THE BRIDGE PROFILE DUE TO THE AMOUNT OF DATA ASSOCIATED WITH THIS INVESTIGATION TECHNIQUE. THE COMPLETE BORING LOGS AND SOUNDING LOGS MAY BE FOUND AT SWLRT PROJECT OFFICE, OR AVAILABLE IN PRINT ON REQUEST. THESE LOGS ARE CONSIDERED A PORTION OF THE PROJECT DOCUMENTS.

NO.	DATE	BY	CHECK	DESIGN	REVISION / SUBMITTAL

DESIGNED BY: KR | CHECKED BY: KJK
DRAWN BY: MSK | CHECKED BY: KJK

AECOM Kimley»Horn

90% SUBMISSION - 01/22/16

METROPOLITAN COUNCIL

SOUTHWEST Green Line LRT Extension

CIVIL - VOLUME 4D
MINNEHAHA CREEK FREIGHT BRIDGE
BRIDGE R0688
BRIDGE SURVEY PLAN

DISCIPLINE: STRUCTURES

SHEET NAME: CBRR0688-BRG-BOR-001

SHEET 38 OF 45

Dec, 11 2015 10:19 am V:\3400_ADC\CAD\SEGMENT E2\PLAN SHEETS\STRUCTURES\R0688\CBRR0688-BRG-BOR-001.dwg By: kevin.kimm

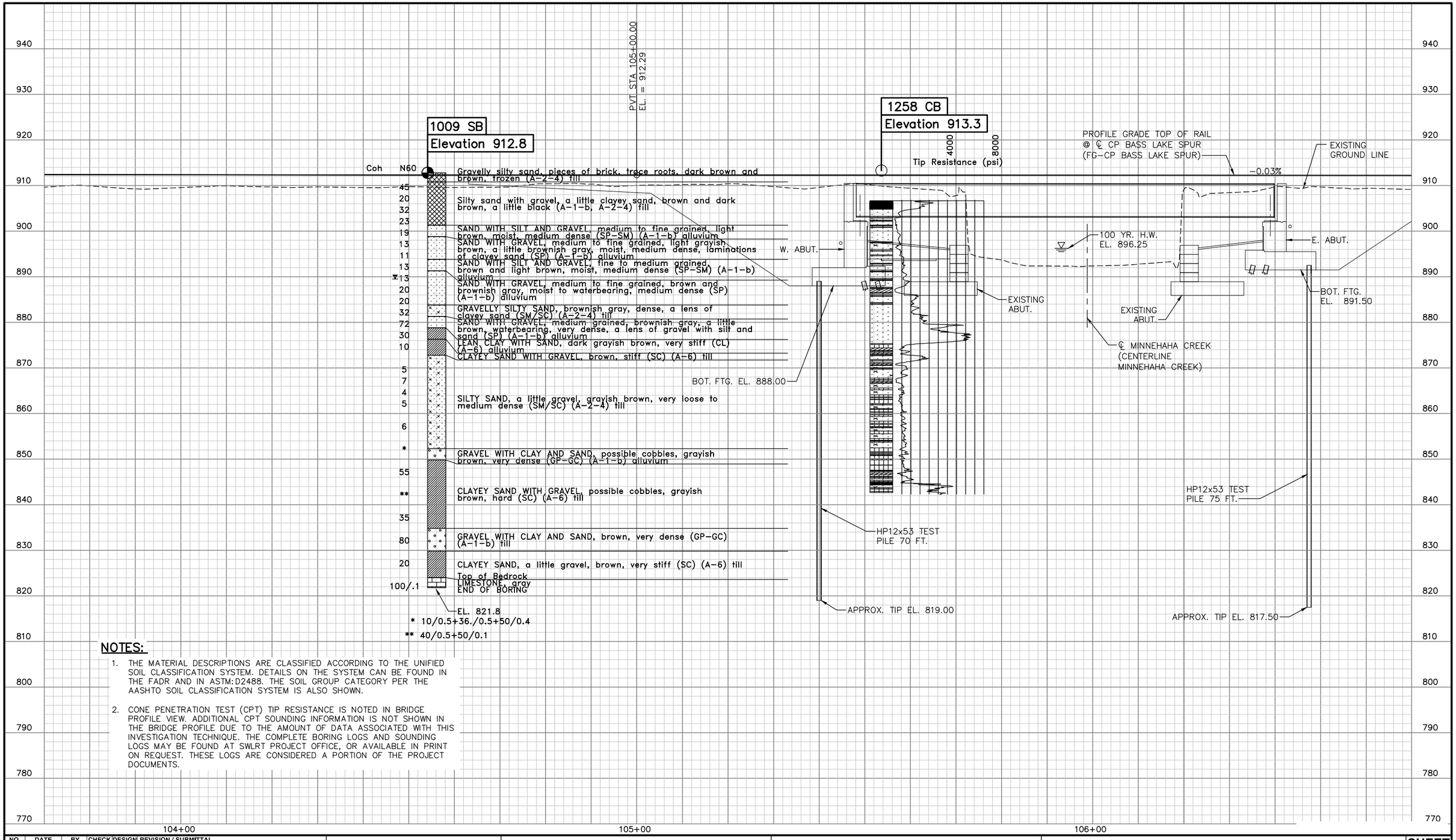

NOTES:

1. THE MATERIAL DESCRIPTIONS ARE CLASSIFIED ACCORDING TO THE UNIFIED SOIL CLASSIFICATION SYSTEM. DETAILS ON THE SYSTEM CAN BE FOUND IN THE FADR AND IN ASTM:D2488. THE SOIL GROUP CATEGORY PER THE AASHTO SOIL CLASSIFICATION SYSTEM IS ALSO SHOWN.

2. CONE PENETRATION TEST (CPT) TIP RESISTANCE IS NOTED IN BRIDGE PROFILE VIEW. ADDITIONAL CPT SOUNDING INFORMATION IS NOT SHOWN IN THE BRIDGE PROFILE DUE TO THE AMOUNT OF DATA ASSOCIATED WITH THIS INVESTIGATION TECHNIQUE. THE COMPLETE BORING LOGS AND SOUNDING LOGS MAY BE FOUND AT SWLRT PROJECT OFFICE, OR AVAILABLE IN PRINT ON REQUEST. THESE LOGS ARE CONSIDERED A PORTION OF THE PROJECT DOCUMENTS.

NO.	DATE	BY	CHECK	DESIGN	REVISION / SUBMITTAL

DESIGNED BY: KR | CHECKED BY: KJK
DRAWN BY: MSK | CHECKED BY: KJK

AECOM Kimley»Horn

90% SUBMISSION - 01/22/16

METROPOLITAN COUNCIL

SOUTHWEST Green Line LRT Extension

CIVIL - VOLUME 4D
MINNEHAHA CREEK FREIGHT BRIDGE
BRIDGE R0688
BRIDGE SURVEY PROFILE 1

DISCIPLINE: STRUCTURES
SHEET NAME: CBRR0688-BRG-BOR-002

SHEET 39 OF 45

Dec, 11 2015 10:21 am V:\3400_ADC\CAD\SEGMENT E2\PLAN SHEETS\STRUCTURES\R0688\CBRR0688-BRG-BOR-002.dwg By: kevin.kimm

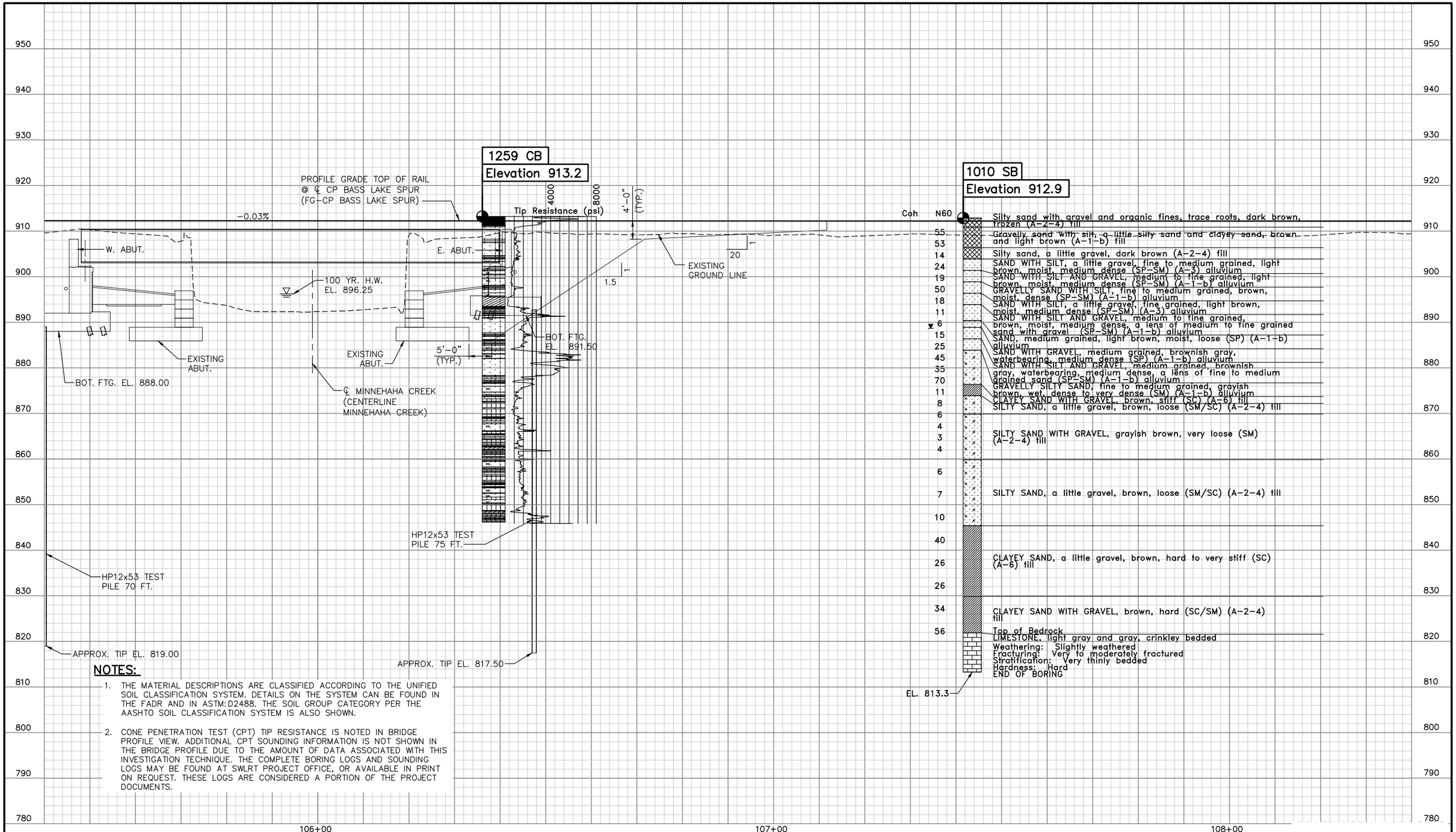

NOTES:

1. THE MATERIAL DESCRIPTIONS ARE CLASSIFIED ACCORDING TO THE UNIFIED SOIL CLASSIFICATION SYSTEM. DETAILS ON THE SYSTEM CAN BE FOUND IN THE FADR AND IN ASTM:D2488. THE SOIL GROUP CATEGORY PER THE AASHTO SOIL CLASSIFICATION SYSTEM IS ALSO SHOWN.
2. CONE PENETRATION TEST (CPT) TIP RESISTANCE IS NOTED IN BRIDGE PROFILE VIEW. ADDITIONAL CPT SOUNDING INFORMATION IS NOT SHOWN IN THE BRIDGE PROFILE DUE TO THE AMOUNT OF DATA ASSOCIATED WITH THIS INVESTIGATION TECHNIQUE. THE COMPLETE BORING LOGS AND SOUNDING LOGS MAY BE FOUND AT SWLRT PROJECT OFFICE, OR AVAILABLE IN PRINT ON REQUEST. THESE LOGS ARE CONSIDERED A PORTION OF THE PROJECT DOCUMENTS.

NO.	DATE	BY	CHECK	DESIGN	REVISION / SUBMITTAL

DESIGNED BY: KR CHECKED BY: KJK
DRAWN BY: MSK CHECKED BY: KJK

AECOM Kimley»Horn

90% SUBMISSION - 01/22/16

METROPOLITAN COUNCIL

SOUTHWEST Green Line LRT Extension

CIVIL - VOLUME 4D
MINNEHAHA CREEK FREIGHT BRIDGE
BRIDGE R0688
BRIDGE SURVEY PROFILE 2

DISCIPLINE: STRUCTURES
SHEET NAME: CBRR0688-BRG-BOR-003

SHEET 40 OF 45

Dec, 11 2015 10:22 am V:\3400_ADC\CAD\SEGMENT E2\PLAN SHEETS\STRUCTURES\R0688\CBRR0688-BRG-BOR-002.dwg By: kevin.kimm

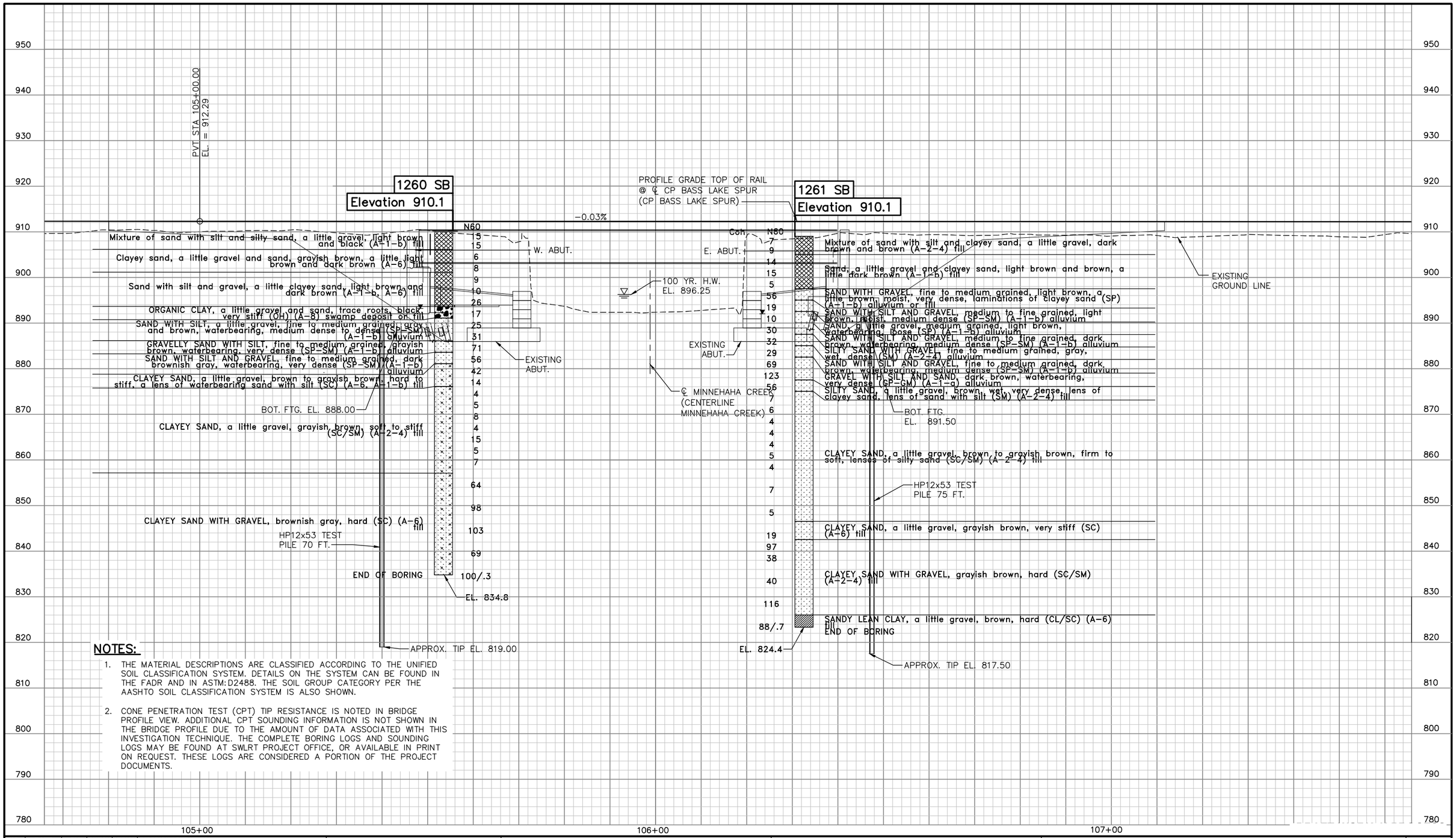

NOTES:

1. THE MATERIAL DESCRIPTIONS ARE CLASSIFIED ACCORDING TO THE UNIFIED SOIL CLASSIFICATION SYSTEM. DETAILS ON THE SYSTEM CAN BE FOUND IN THE FADR AND IN ASTM:D2488. THE SOIL GROUP CATEGORY PER THE AASHTO SOIL CLASSIFICATION SYSTEM IS ALSO SHOWN.

2. CONE PENETRATION TEST (CPT) TIP RESISTANCE IS NOTED IN BRIDGE PROFILE VIEW. ADDITIONAL CPT SOUNDING INFORMATION IS NOT SHOWN IN THE BRIDGE PROFILE DUE TO THE AMOUNT OF DATA ASSOCIATED WITH THIS INVESTIGATION TECHNIQUE. THE COMPLETE BORING LOGS AND SOUNDING LOGS MAY BE FOUND AT SWLRT PROJECT OFFICE, OR AVAILABLE IN PRINT ON REQUEST. THESE LOGS ARE CONSIDERED A PORTION OF THE PROJECT DOCUMENTS.

NO.	DATE	BY	CHECK	DESIGN	REVISION / SUBMITTAL

DESIGNED BY: KR | CHECKED BY: KJK
DRAWN BY: MSK | CHECKED BY: KJK

AECOM Kimley»Horn

90% SUBMISSION - 01/22/16

METROPOLITAN COUNCIL

SOUTHWEST Green Line LRT Extension

CIVIL - VOLUME 4D
MINNEHAHA CREEK FREIGHT BRIDGE
BRIDGE R0688
BRIDGE SURVEY PROFILE 3

DISCIPLINE: STRUCTURES

SHEET NAME: CBRR0688-BRG-BOR-004

SHEET 41 OF 45

Dec, 11 2015 10:22 am V:\3400_ADC\CAD\SEGMENT E2\PLAN SHEETS\STRUCTURES\R0688\CBRR0688-BRG-BOR-002.dwg By: kevin.kimm

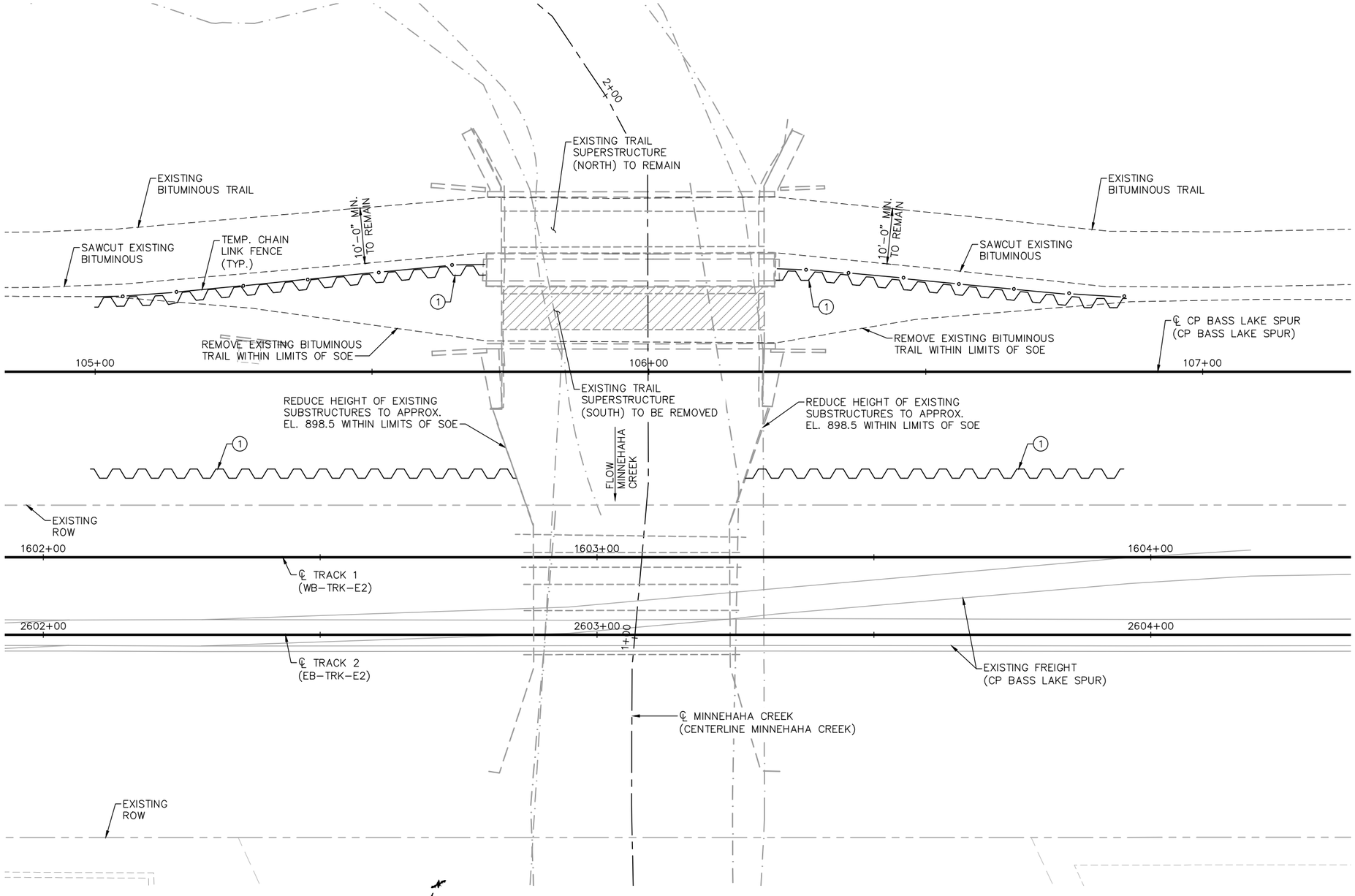

PROPOSED CONSTRUCTION SEQUENCING – STAGE 1

STAGING NOTES:

STAGES 1–4 SHOWN IN THIS PLAN SET, SEE BRIDGE R0689 FOR STAGES 5 & 6.

INSTALL TRAFFIC CONTROL TO DIRECT TRAIL USERS TO THE EXISTING TRAIL SUPERSTRUCTURE. MAINTAIN A 10'–0" MINIMUM CLEAR WIDTH OF EXISTING BITUMINOUS TRAIL WITH 2'–0" CLEAR ZONE ALONG EACH SIDE. PROVIDE TEMPORARY CHAIN LINK FENCE ALONG LENGTH OF THE SOE.

INSTALL SOE FOR CONSTRUCTION OF PROPOSED FREIGHT BRIDGE R0688.

REMOVE EXISTING TRAIL SUPERSTRUCTURE (SOUTH). EXCAVATE FOR CONSTRUCTION OF FREIGHT BRIDGE R0688. EXISTING SUBSTRUCTURES ARE TO REMAIN IN PLACE. REDUCE HEIGHT OF EXISTING SUBSTRUCTURES TO APPROXIMATE ELEVATION 898.5 AS APPROVED BY ENGINEER IN FIELD.

(1) SOE

STAGING REQUIREMENTS:

ALL TRACKS SHALL BE KEPT OPEN FOR TRAIN USE DURING CONSTRUCTION EXCEPT WITH PRIOR APPROVAL. CP SHALL HAVE FINAL AUTHORITY ON PERMITTED TRACK CLOSURES.

CEDAR LAKE TRAIL SHALL BE KEPT OPEN FOR PUBLIC USE DURING CONSTRUCTION EXCEPT WITH PRIOR APPROVAL.

NO.	DATE	BY	CHECK	DESIGN	REVISION / SUBMITTAL

DESIGNED BY: BAW | CHECKED BY: KJK
DRAWN BY: RHK | CHECKED BY: KJK

AECOM Kimley»Horn

90% SUBMISSION - 01/22/16

METROPOLITAN COUNCIL

SOUTHWEST Green Line LRT Extension

CIVIL - VOLUME 4D
MINNEHAHA CREEK FREIGHT BRIDGE
BRIDGE R0688
STAGING PLAN 1

DISCIPLINE: STRUCTURES
SHEET NAME: CBRR0688-BRG-STG-001

SHEET 42 OF 45

Dec, 11 2015 10:26 am V:\3400_ADC\CAD\SEGMENT E2\PLAN SHEETS\STRUCTURES\R0688\CBRR0688-BRG-STG-001.dwg By: kevin.kimm

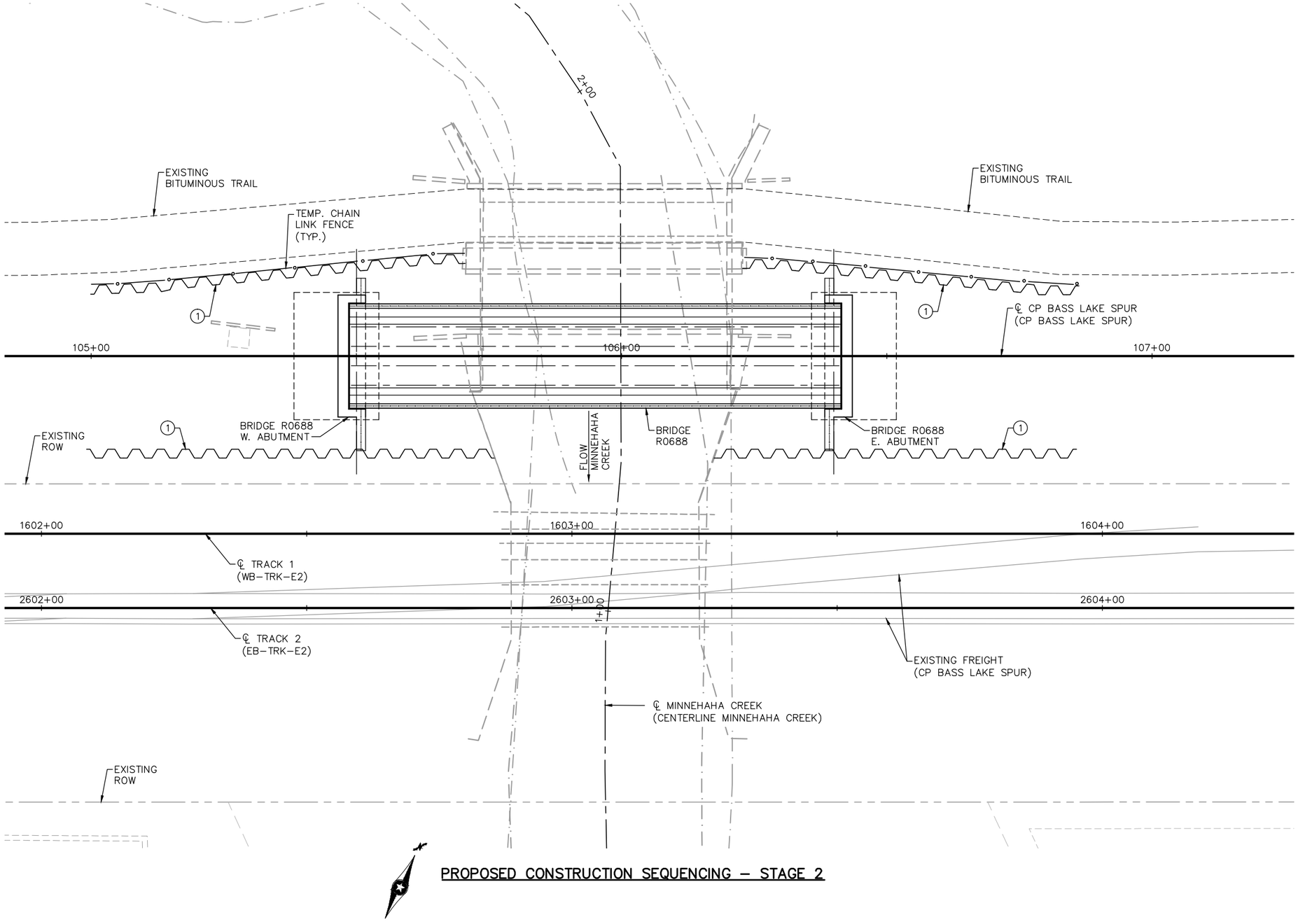

PROPOSED CONSTRUCTION SEQUENCING – STAGE 2

STAGING NOTES:

STAGES 1–4 SHOWN IN THIS PLAN SET, SEE BRIDGE R0689 FOR STAGES 5 & 6.

CONSTRUCT FREIGHT BRIDGE R0688. BACKFILL STRUCTURE.

CONSTRUCT TEMPORARY TRAIL UP TO ENDS OF BRIDGE R0688. TEMPORARY TRAIL SHALL HAVE A 10'–0" MINIMUM CLEAR WIDTH, 2'–0" CLEAR ZONE ALONG EACH SIDE AND PROVIDE TEMPORARY CHAIN LINK FENCE ALONG LENGTH OF TEMPORARY TRAIL ALIGNMENT.

(1) SOE

STAGING REQUIREMENTS:

ALL TRACKS SHALL BE KEPT OPEN FOR TRAIN USE DURING CONSTRUCTION EXCEPT WITH PRIOR APPROVAL. CP SHALL HAVE FINAL AUTHORITY ON PERMITTED TRACK CLOSURES.

CEDAR LAKE TRAIL SHALL BE KEPT OPEN FOR PUBLIC USE DURING CONSTRUCTION EXCEPT WITH PRIOR APPROVAL.

NO.	DATE	BY	CHECK	DESIGN	REVISION / SUBMITTAL

DESIGNED BY: BAW | CHECKED BY: KJK
DRAWN BY: RHK | CHECKED BY: KJK

AECOM Kimley»Horn

90% SUBMISSION - 01/22/16

METROPOLITAN COUNCIL

SOUTHWEST Green Line LRT Extension

CIVIL - VOLUME 4D
MINNEHAHA CREEK FREIGHT BRIDGE
BRIDGE R0688
STAGING PLAN 2

DISCIPLINE: STRUCTURES
SHEET NAME: CBRR0688-BRG-STG-002

SHEET 43 OF 45

Dec, 11 2015 10:28 am V:\3400_ADC\CAD\SEGMENT E2\PLAN SHEETS\STRUCTURES\R0688\CBRR0688-BRG-STG-001.dwg By: kevin.kimm

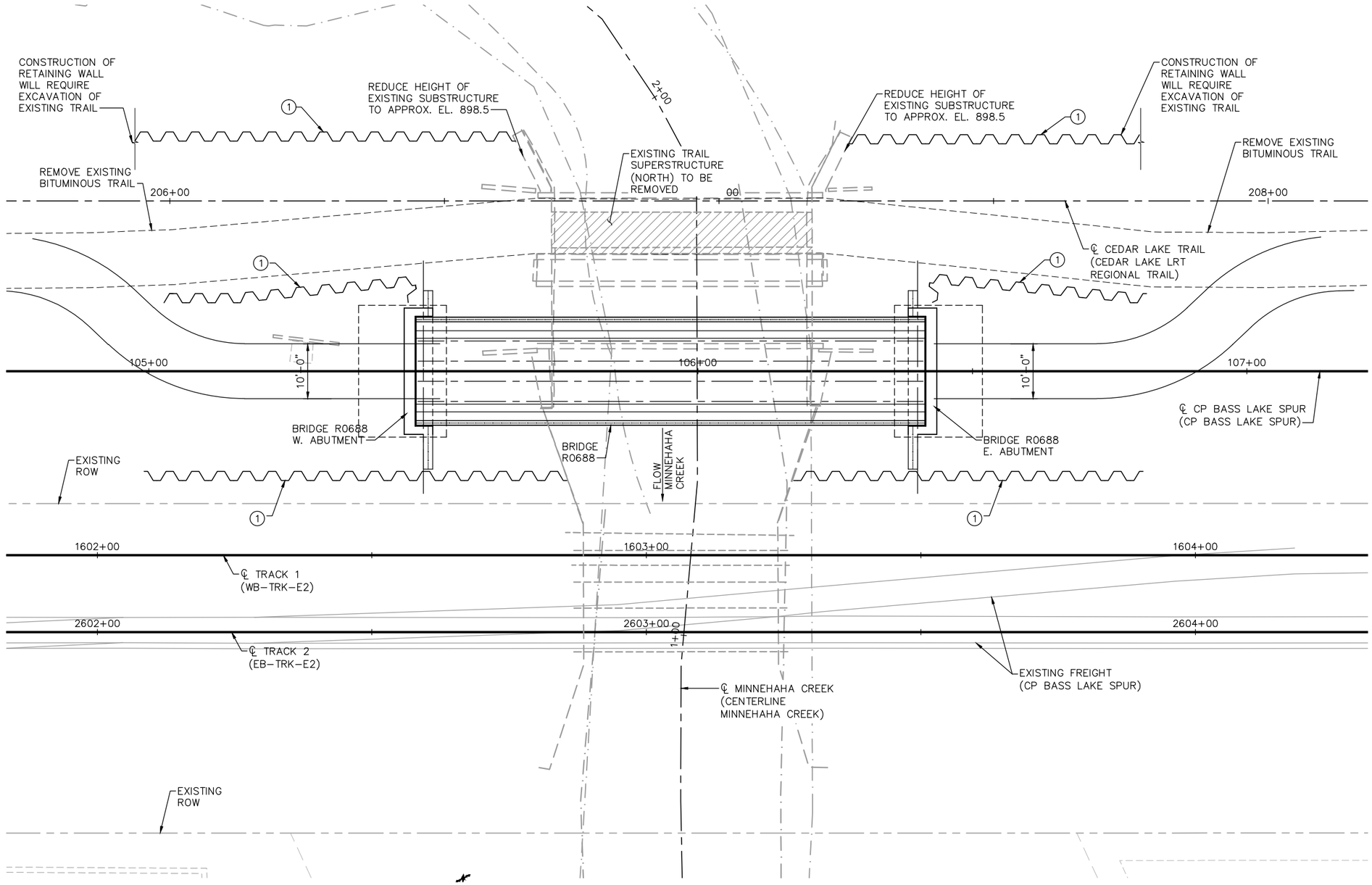

PROPOSED CONSTRUCTION SEQUENCING – STAGE 3

STAGING NOTES:

STAGES 1–4 SHOWN IN THIS PLAN SET, SEE BRIDGE R0689 FOR STAGES 5 & 6.

RELOCATE EXISTING TRAIL TO TEMPORARY TRAIL ALIGNMENT OVER BRIDGE R0688.

REMOVE AND INSTALL SOE AS NECESSARY TO CONSTRUCT PROPOSED TRAIL BRIDGE R0687 AND RETAINING WALLS.

REMOVE EXISTING TRAIL SUPERSTRUCTURE (NORTH). EXCAVATE FOR CONSTRUCTION OF TRAIL BRIDGE R0687. EXISTING SUBSTRUCTURES TO REMAIN IN PLACE. REDUCE HEIGHT OF EXISTING SUBSTRUCTURE APPROXIMATE ELEVATION 898.5 AS APPROVED BY ENGINEER IN FIELD.

CONSTRUCT PROPOSED BRIDGE R0687 AND RETAINING WALLS E201 AND E204. BACKFILL STRUCTURES.

REMOVE SOE AS REQUIRED.

(1) SOE

STAGING REQUIREMENTS:

ALL TRACKS SHALL BE KEPT OPEN FOR TRAIN USE DURING CONSTRUCTION EXCEPT WITH PRIOR APPROVAL. CP SHALL HAVE FINAL AUTHORITY ON PERMITTED TRACK CLOSURES.

CEDAR LAKE TRAIL SHALL BE KEPT OPEN FOR PUBLIC USE DURING CONSTRUCTION EXCEPT WITH PRIOR APPROVAL.

NO.	DATE	BY	CHECK	DESIGN	REVISION / SUBMITTAL

DESIGNED BY: BAW | CHECKED BY: KJK
DRAWN BY: RHK | CHECKED BY: KJK

AECOM Kimley»Horn

90% SUBMISSION - 01/22/16

METROPOLITAN COUNCIL

SOUTHWEST Green Line LRT Extension

CIVIL - VOLUME 4D
MINNEHAHA CREEK FREIGHT BRIDGE
BRIDGE R0688
STAGING PLAN 3

DISCIPLINE: STRUCTURES
SHEET NAME: CBRR0688-BRG-STG-003

SHEET 44 OF 45

Dec, 11 2015 10:30 am V:\3400_ADC\CAD\SEGMENT E2\PLAN SHEETS\STRUCTURES\R0688\CBRR0688-BRG-STG-001.dwg By: kevin.kimm

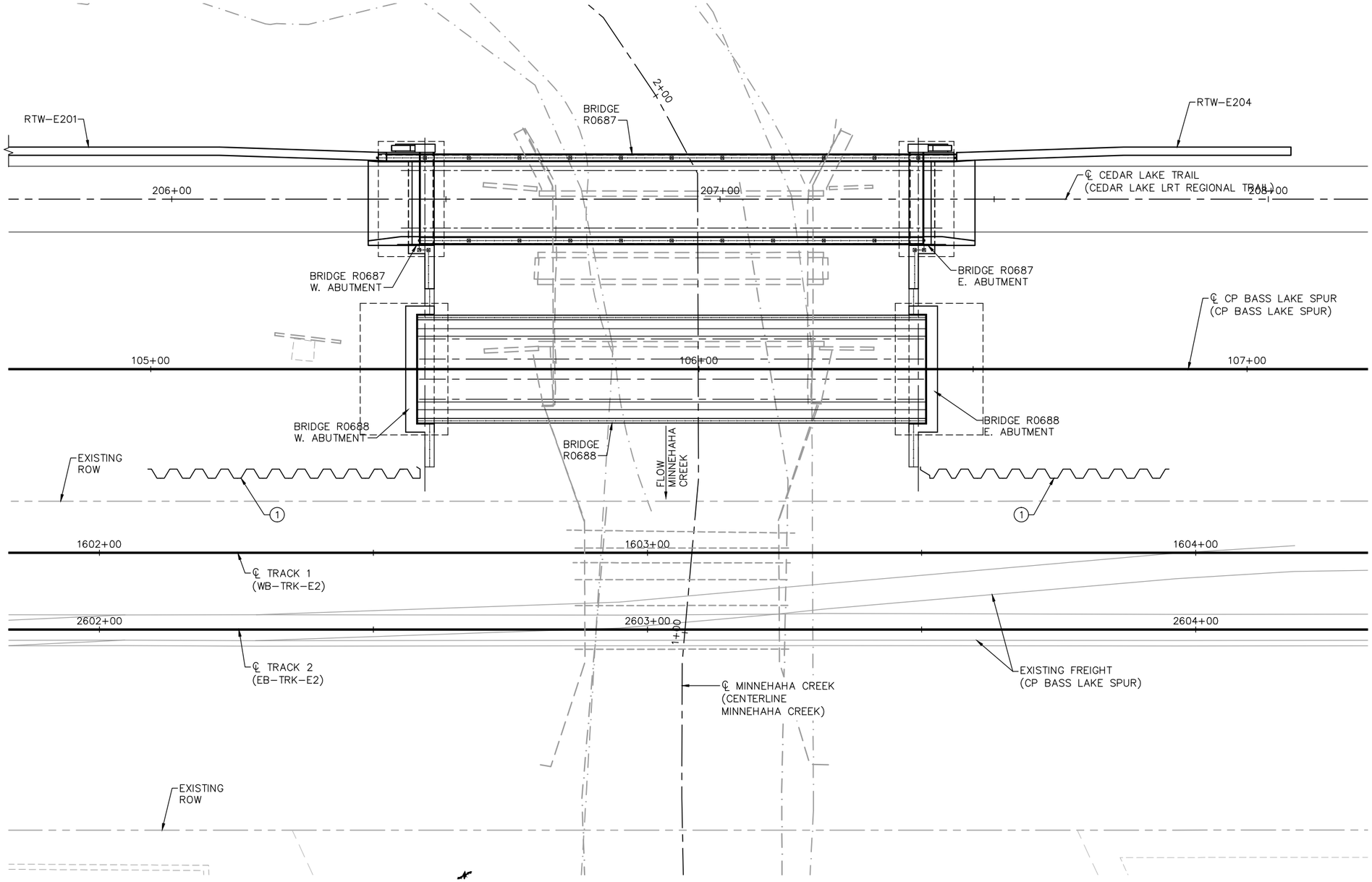

PROPOSED CONSTRUCTION SEQUENCING – STAGE 4

STAGING NOTES:

STAGES 1–4 SHOWN IN THIS PLAN SET, SEE BRIDGE R0689 FOR STAGES 5 & 6.

RELOCATE TEMPORARY CEDAR LAKE TRAIL TO FINAL ALIGNMENT. REMOVE TEMPORARY TRAIL ALIGNMENT.

RELOCATE EXISTING CP BASE LAKE SPUR TO FINAL ALIGNMENT.

(1) SOE

STAGING REQUIREMENTS:

ALL TRACKS SHALL BE KEPT OPEN FOR TRAIN USE DURING CONSTRUCTION EXCEPT WITH PRIOR APPROVAL. CP SHALL HAVE FINAL AUTHORITY ON PERMITTED TRACK CLOSURES.

CEDAR LAKE TRAIL SHALL BE KEPT OPEN FOR PUBLIC USE DURING CONSTRUCTION EXCEPT WITH PRIOR APPROVAL.

NO.	DATE	BY	CHECK	DESIGN	REVISION / SUBMITTAL

DESIGNED BY: BAW | CHECKED BY: KJK
DRAWN BY: RHK | CHECKED BY: KJK

AECOM Kimley»Horn

90% SUBMISSION - 01/22/16

METROPOLITAN COUNCIL

SOUTHWEST Green Line LRT Extension

CIVIL - VOLUME 4D
MINNEHAHA CREEK FREIGHT BRIDGE
BRIDGE R0688
STAGING PLAN 4

DISCIPLINE: STRUCTURES
SHEET NAME: CBRR0688-BRG-STG-004

SHEET 45 OF 45

Dec, 11 2015 10:32 am V:\3400_ADC\CAD\SEGMENT E2\PLAN SHEETS\STRUCTURES\R0688\CBRR0688-BRG-STG-001.dwg By: kevin.kimm

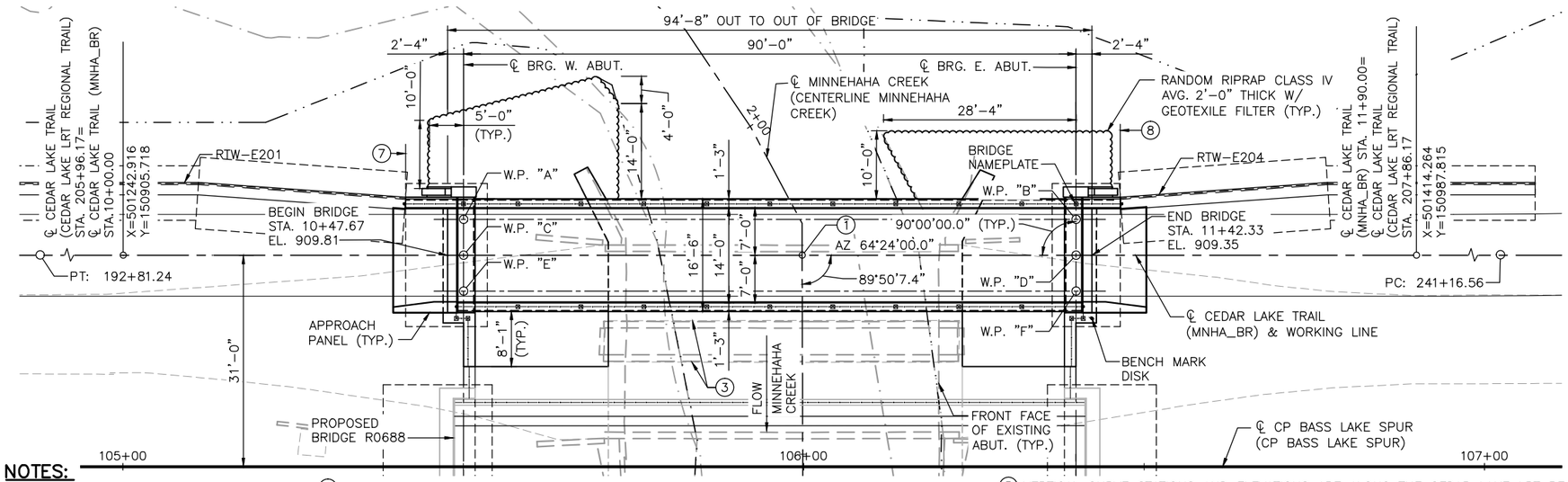

NOTES:

SEE SHEET 39 FOR INPLACE UTILITIES.

SEE SHEETS 43–46 FOR STAGING PLANS AND SOE.

PLANS ARE NOT AVAILABLE FOR THE EXISTING BRIDGES. THE EXISTING ABUTMENT STEM THICKNESS AND FOOTING LIMITS ARE UNKNOWN FOR BOTH BRIDGES.

(1) CONTROL POINT
℄ CEDAR LAKE TRAIL (MNHA_BR) STA. 10+99.75 = ℄ MINNEHAHA CREEK (CENTERLINE MINNEHAHA CREEK) STA. 1+79.18
X = 501332.876; Y = 150948.820

(2) PORTION OF EXISTING SUBSTRUCTURES TO REMAIN. REDUCE HEIGHT OF EXISTING SUBSTRUCTURES TO APPROXIMATE ELEVATION 898.5±. SEE STAGING PLANS FOR SUBSTRUCTURE REMOVAL LIMITS.

(3) INPLACE BRIDGE 2–15' WIDE x 48' LONG STEEL PLATE GIRDER SPANS. SUPERSTRUCTURES TO BE REMOVED. SEE STAGING PLANS FOR REMOVAL NOTES.

(4) ABUTMENT FOOTING DEPTH DETERMINED BASED ON LOCATION OF AN ASSUMED FUTURE TRAIL. VERTICAL AND HORIZONTAL CLEARANCES BELOW SUPERSTRUCTURE MEET CURRENT REQUIREMENTS FOR A 12'–0" WIDE TRAIL SECTION.

(5) VERTICAL CURVE STATIONS AND ELEVATIONS ARE ALONG THE CEDAR LAKE LRT REGIONAL TRAIL ALIGNMENT.

(6) ABUTMENTS TESTED AND FOUND TO BE COATED IN LEAD CONTAINING PAINT. CONTRACTOR SHALL USE APPROPRIATE CONTAINMENT AND REMOVAL METHODS.

(7) END OF RTW–E201 AND BEGIN NW WINGWALL AT F.F. WINGWALL. ℄ CEDAR LAKE TRAIL (CEDAR LAKE LRT REGIONAL TRAIL) STA. 206+37.67 = ℄ CEDAR LAKE TRAIL (MNHA_BR) STA. 10+41.50. X =501276.742; Y =150931.163.

(8) END OF NE WINGWALL AT F.F. WINGWALL AND BEGIN OF RTW–E204. ℄ CEDAR LAKE TRAIL (MNHA_BR) STA. 11+46.50 = ℄ CEDAR LAKE TRAIL (CEDAR LAKE LRT REGIONAL TRAIL) STA. 207+42.67. X=501371.435; Y=150976.532.

(9) ARCHITECTURAL CONCRETE TEXTURE (STRIATED RELIEF) WITH ARCHITECTURAL SURFACE FINISH (SINGLE COLOR). SEE ABUTMENT SHEETS FOR LIMITS.

GENERAL PLAN
0 5' 10' 20'
SCALE IN FEET

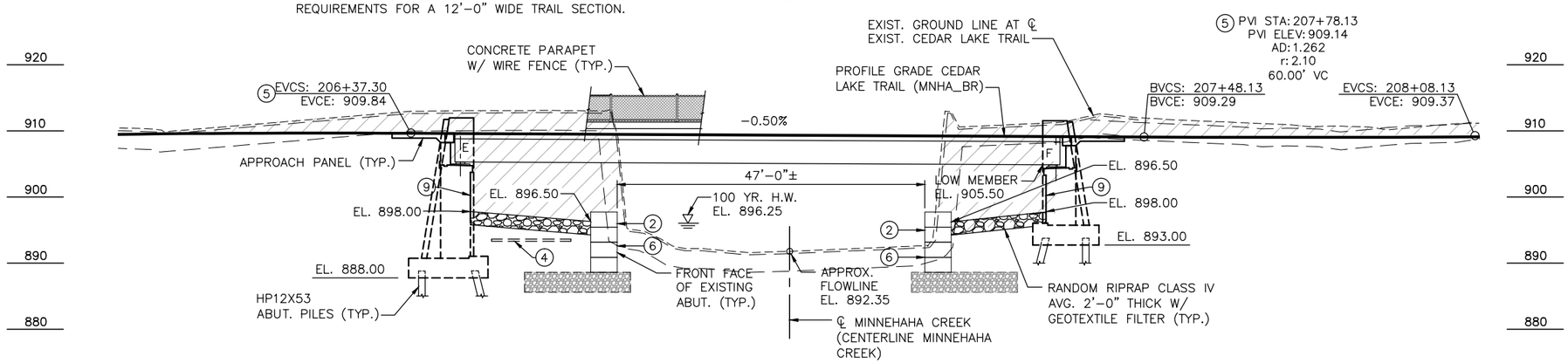

EXISTING GROUND PROFILE
9' LEFT
℄ CEDAR LAKE TRAIL
9' RIGHT

HATCHED AREA TO BE REMOVED

GENERAL ELEVATION
0 5' 10' 20'
SCALE IN FEET

DESIGN DATA

AASHTO LRFD BRIDGE DESIGN SPECIFICATIONS, 7TH EDITION, 2014 WITH 2015 INTERIM REVISIONS

2009 INCLUDING 2014 INTERIMS AASHTO LRFD GUIDE SPECIFICATIONS FOR THE DESIGN OF PEDESTRIAN BRIDGES

SOUTHWEST LIGHT RAIL TRANSIT DESIGN CRITERIA (REVISION 4.0)

LOAD AND RESISTANCE FACTOR DESIGN METHOD

90 PSF PEDESTRIAN LIVE LOAD
H 10 MAINTENANCE VEHICLE LIVE LOAD

MATERIAL DESIGN PROPERTIES:
REINFORCED CONCRETE:
f'c = 4 KSI n = 8
fy = 60 KSI REINFORCEMENT

PRESTRESSED CONCRETE:
f'c = 8 KSI n = 1
fpu = 270 KSI
FOR 0.6" DIA. LOW RELAXATION STRANDS

STRUCTURAL STEEL:
fy = 36 KSI STRUCTURAL STEEL SPEC. 3306

DESIGN SPEED: OVER = 30 MPH

DECK AREA = 1562 SQ. FT.

LIST OF SHEETS

NO.	DESCRIPTION
1	GENERAL PLAN AND ELEVATION
2	TRANSVERSE SECTION AND QUANTITIES
3	BRIDGE LAYOUT
4–7	WEST ABUTMENT DETAILS
8–12	WEST ABUTMENT REINFORCEMENT
13–16	EAST ABUTMENT DETAILS
17–21	EAST ABUTMENT REINFORCEMENT
22	FRAMING PLAN
23	36" PRESTRESSED CONCRETE BEAM DETAILS
24–27	SUPERSTRUCTURE DETAILS
28	CONCRETE PARAPET (TYPE P–1)
29	WIRE FENCE (DESIGN W–1)
30	WATERPROOF EXPANSION DEVICE
31	APPROACH PANEL DETAILS
32	RIPRAP SLOPE WITH GEOTEXTILE FILTER
33–37	BRIDGE DETAILS
38	AS–BUILT BRIDGE DATA
39	BRIDGE SURVEY
40	BRIDGE SURVEY PLAN
41–42	BRIDGE SURVEY PROFILE
43–46	STAGING PLANS

BRIDGE NO. R0687

CEDAR LAKE TRAIL OVER MINNEHAHA CREEK
1.7 MI. S.W. OF JCT. T.H. 7 & T.H. 100
IN ST. LOUIS PARK
90'–0" PRESTRESSED CONCRETE BEAM SPAN
14'–0" CLEAR TRAIL, 00°–00'–00.0" SKEW
P–1 PARAPET W/ WIRE FENCE

BRIDGE I.D. NO. 501

GENERAL PLAN AND ELEVATION

SEC 20 T 117N R 21W
CITY OF ST. LOUIS PARK HENNEPIN COUNTY

JOB NO.: T9N635 | STATE PROJ. NO.: 9909–01 | MNDOT REVIEW: JOE NIETFELD

NO.	DATE	BY	CHECK	DESIGN	REVISION / SUBMITTAL

DESIGNED BY: BAW CHECKED BY: BLF
DRAWN BY: NAO CHECKED BY: BLF

AECOM Kimley»Horn

90% SUBMISSION - 01/22/16

METROPOLITAN COUNCIL
SOUTHWEST Green Line LRT Extension

CIVIL - VOLUME 4D
MINNEHAHA CREEK TRAIL BRIDGE
BRIDGE R0687
GENERAL PLAN AND ELEVATION

DISCIPLINE: STRUCTURES
SHEET NAME: CBRR0687-BRG-GPE-001

SHEET 1 OF 46

Dec, 10 2015 08:08 am v:\3400_ADC\CAD\SEGMENT E2\PLAN SHEETS\STRUCTURES\MNHA-TRL\CBRR0687-BRG-GPE-001.dwg By: brian.fleming

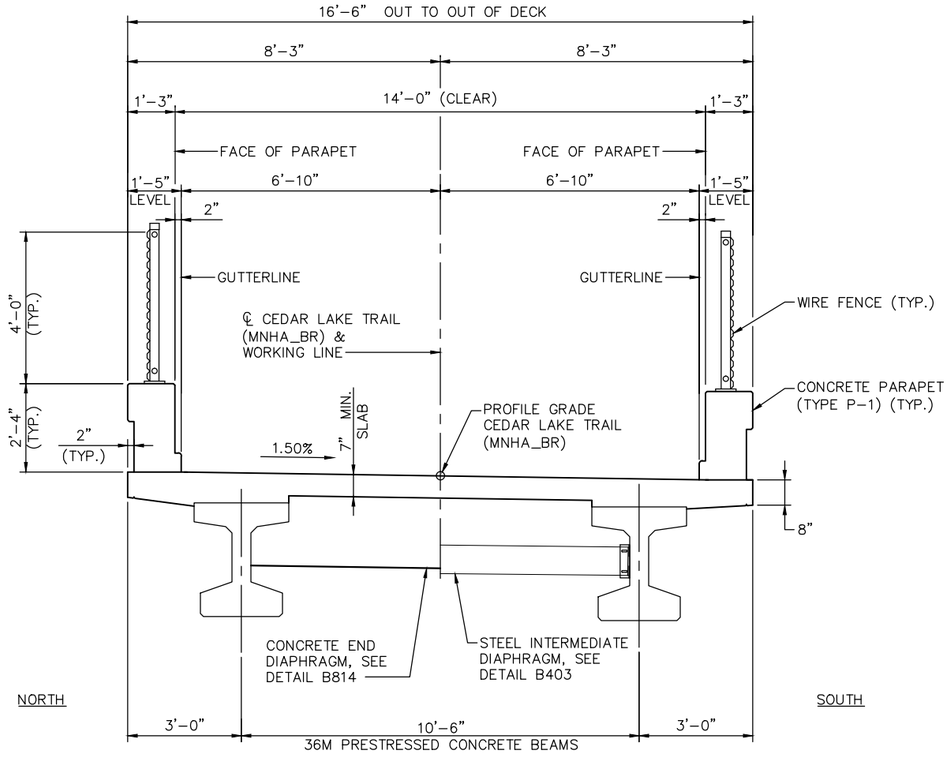

TRANSVERSE SECTION

0 1' 2' 4'
SCALE IN FEET

CONSTRUCTION NOTES:

THE 2016 EDITION OF THE MINNESOTA DEPARTMENT OF TRANSPORTATION "STANDARD SPECIFICATIONS FOR CONSTRUCTION" SHALL GOVERN.

BRIDGE SEAT REINFORCEMENT SHALL BE CAREFULLY PLACED TO AVOID INTERFERENCE WITH DRILLING HOLES FOR ANCHOR RODS, THE BEAMS SHALL BE ERECTED IN FINAL POSITION PRIOR TO DRILLING HOLES FOR AND PLACING ANCHOR RODS.

THE BAR SIZES SHOWN IN THIS PLAN ARE IN U.S. CUSTOMARY DESIGNATIONS. THE FIRST DIGIT OR THE FIRST TWO DIGITS OF EACH BAR MARK INDICATE THE BAR SIZE.

BARS MARKED WITH THE SUFFIX "E" SHALL BE EPOXY COATED IN ACCORDANCE WITH SPEC. 3301.

THE SUBSURFACE UTILITY INFORMATION IN THIS PLAN IS UTILITY QUALITY LEVEL D. THIS UTILITY QUALITY LEVEL WAS DETERMINED ACCORDING TO THE GUIDELINES OF CI/ASCE 38-02, ENTITLED "STANDARD GUIDELINES FOR THE COLLECTION AND DEPICTION OF EXISTING SUBSURFACE UTILITY DATA".

THE PILE LOADS SHOWN IN THE PLANS AND THE CORRESPONDING NOMINAL PILE BEARING RESISTANCE (Rn) WERE COMPUTED USING LRFD METHODOLOGY. PILE BEARING RESISTANCE DETERMINED IN THE FIELD SHALL INCORPORATE THE METHODS AND/OR FORMULAS DESCRIBED IN THE SPECIAL PROVISIONS.

GROUNDING NOTES:

SEE SHEETS ELE-SITE-SCH-504, ELE-SITE-DTL-600, ELE-SITE-DTL-601 AND ELE-SITE-DTL-602 FOR ADDITIONAL FENCE GROUNDING INFORMATION. FOR BRIDGES, ABUTMENTS AND RETAINING WALLS THAT DON'T HAVE STRAY CURRENT SYSTEMS, GROUND THE FENCE AS SHOWN IN THE WIRE FENCE DETAIL.

SCHEDULE OF QUANTITIES

SPEC. SECTION	COMPONENT ITEM	UNIT	QUANTITY
–	CONSTRUCT BRIDGE R0687	LUMP SUM	LS

COMPONENT ITEM SUMMARY (BRIDGE R0687)

	SPEC. SECTION (3)	COMPONENT ITEM	UNIT (2)	QUANTITY (2)
	2401	STRUCTURAL CONCRETE (1G52)	CU. YD.	54
(1)	2401	STRUCTURAL CONCRETE (3B52)	CU. YD.	124
	2401	TYPE P-1 BARRIER CONCRETE (3S52)	LIN. FT.	197
	2401	REINFORCEMENT BARS	POUND	2,940
	2401	REINFORCEMENT BARS (EPOXY COATED)	POUND	24,040
	SB-XX	BRIDGE SLAB CONCRETE (3YHPC-M)	CU. YD.	42
	2402	EXPANSION JOINT DEVICES TYPE 4	LIN. FT.	30
	2402	BEARING ASSEMBLY	EACH	4
	2405	PRESTRESSED CONCRETE BEAMS 36M	LIN. FT.	183
	2405	DIAPHRAGMS FOR TYPE 36M PRESTRESSED BEAMS	LIN. FT.	21
	SB-XX	ARCHITECTURAL SURFACE FINISH (SINGLE COLOR)	SQ. FT.	844
	SB-XX	ARCHITECTURAL CONCRETE TEXTURE (STRIATED RELIEF)	SQ. FT.	748
	SB-XX	ARCHITECTURAL CONCRETE TEXTURE (LIMESTONE)	SQ. FT.	96
	2442	REMOVE EXISTING BRIDGE	LUMP SUM	1
(4)	SB-XX	STRUCTURAL EXCAVATION CLASS U	CU. YD.	885
	SB-XX	STEEL H-PILING 12"	LIN. FT.	825
	2452	STEEL H-TEST PILE 75 FT LONG 12"	EACH	2
	2452	PILE TIP PROTECTION 12"	EACH	13
	SB-XX	STEEL SHEET PILING (TEMPORARY)	LUMP SUM	1
	2481	MEMBRANE WATERPROOFING SYSTEM	LIN. FT.	152
	2502	DRAINAGE SYSTEM TYPE (B910)	LUMP SUM	1
	2511	RANDOM RIPRAP CLASS IV	CU. YD.	115
	2511	GEOTEXTILE FILTER TYPE VII	SQ. YD.	175
(5) | 2557 | WIRE FENCE DESIGN W-1 | LIN. FT. | 198 |
(6) | 2557 | WIRE FENCE DESIGN W-1 | LIN. FT. | 18 |

NOTES:

(1) A BENCH MARK IS REQUIRED. LOCATED AT THE SE CORNER OF THE BRIDGE. STATE WILL FURNISH DISK. BEND PRONGS OUTWARD TO ANCHOR DISK IN CONCRETE. BOTTOM OF DISK TOP TO BE PLACED FLUSH WITH CONCRETE.

(2) QUANTITIES LISTED FOR THE COMPONENT ITEMS OF THE LUMP SUM BR R0687 ITEM ARE FOR INFORMATIONAL PURPOSES. ANY ADDITIONAL ITEMS OR CHANGES IN QUANTITIES REQUIRED SHALL BE PROVIDED BY THE CONTRACTOR WITH NO ADDITIONAL COMPENSATION.

(3) MEASUREMENT AND PAYMENT FOR COMPONENT ITEMS SHALL BE PART OF THE LUMP SUM PAYMENT FOR THE BR R0687. REFER TO MnDOT STANDARD SPECIFICATION OR SPECIAL PROVISION FOR TECHNICAL SPECIFICATION REQUIREMENTS FOR ALL PROVISION OTHER THAN MEASUREMENT AND PAYMENT REQUIREMENTS.

(4) BACKFILL BEHIND ABUTMENTS SHALL BE SELECT GRANULAR BORROW PER SPEC. 3149.2.B.2. SEE SHEETS 41 & 42 FOR PLACEMENT LIMITS. BACKFILL DENSITY SHALL BE ATTAINED BY THE SPECIFIED DENSITY METHOD IN ACCORDANCE WITH SPEC. 2105.3.F.1.

(5) QUANTITY FOR 48" TALL WIRE FENCE FABRIC.

(6) QUANTITY FOR 72" TALL WIRE FENCE FABRIC.

NO.	DATE	BY	CHECK	DESIGN	REVISION / SUBMITTAL

DESIGNED BY: BAW CHECKED BY: BLF
DRAWN BY: NAO CHECKED BY: BLF

AECOM Kimley»Horn

90% SUBMISSION - 01/22/16

METROPOLITAN COUNCIL

SOUTHWEST Green Line LRT Extension

CIVIL - VOLUME 4D
MINNEHAHA CREEK TRAIL BRIDGE
BRIDGE R0687
TRANSVERSE SECTION AND QUANTITIES

DISCIPLINE: STRUCTURES
SHEET NAME: CBRR0687-BRG-TRN-001

SHEET 2 OF 46

Dec, 11 2015 05:55 am V:\3400_ADC\CAD\SEGMENT E2\PLAN SHEETS\STRUCTURES\MNHA-TRL\CBRR0687-BRG-TRN-001.dwg By: brian.fleming

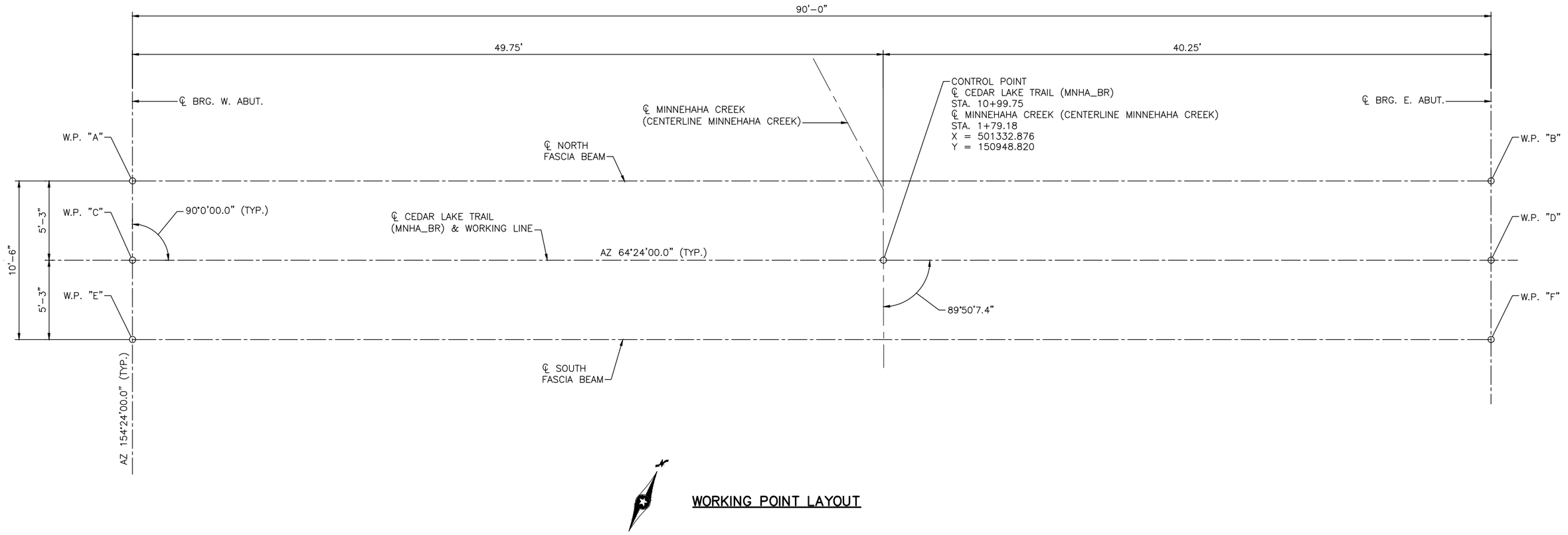

WORKING POINT LAYOUT

DIMENSIONS BETWEEN WORKING POINTS								COORDINATES		ELEVATIONS			
POINT	STATION	A	B	C	D	E	F	X	Y	TOP OF SLAB	TOP OF SLAB TO BRIDGE SEAT	BRIDGE SEAT	POINT
A	10+50.00		90.00	5.25	90.15		90.61	501285.739	150932.057	909.88	4.17	905.71	A
B	11+40.00				5.25	90.61		501366.904	150970.945	909.43	4.05	905.38	B
C	10+50.00				90.00	5.25	90.15	501288.008	150927.323	909.80			C
D	11+40.00						5.25	501369.172	150966.210	909.35			D
E	10+50.00						90.00	501290.276	150922.588	909.72	4.17	905.55	E
F	11+40.00							501371.441	150961.476	909.27	4.05	905.22	F

TOP OF ROADWAY TO BRIDGE SEAT						
	DECK THICKNESS	STOOL HEIGHT	BEAM HEIGHT	BEARING HEIGHT	TOTAL	
					INCHES	FEET
WEST ABUTMENT	7"	2 3/8"	36"	4 5/8"	50	4.17
EAST ABUTMENT	7"	2 3/8"	36"	3 1/4"	48 5/8"	4.05

NO.	DATE	BY	CHECK	DESIGN	REVISION / SUBMITTAL

DESIGNED BY: BAW CHECKED BY: BLF
DRAWN BY: NAO CHECKED BY: BLF

AECOM Kimley»Horn

90% SUBMISSION - 01/22/16

METROPOLITAN COUNCIL

SOUTHWEST Green Line LRT Extension

CIVIL - VOLUME 4D
MINNEHAHA CREEK TRAIL BRIDGE
BRIDGE R0687
BRIDGE LAYOUT

DISCIPLINE: STRUCTURES
SHEET NAME: CBRR0687-BRG-SUP-001

SHEET 3 OF 46

Dec, 10 2015 08:08 am V:\3400_ADC\CAD\SEGMENT E2\PLAN SHEETS\STRUCTURES\MNHA-TRL\CBRR0687-BRG-SUP-001.dwg By: brian.fleming

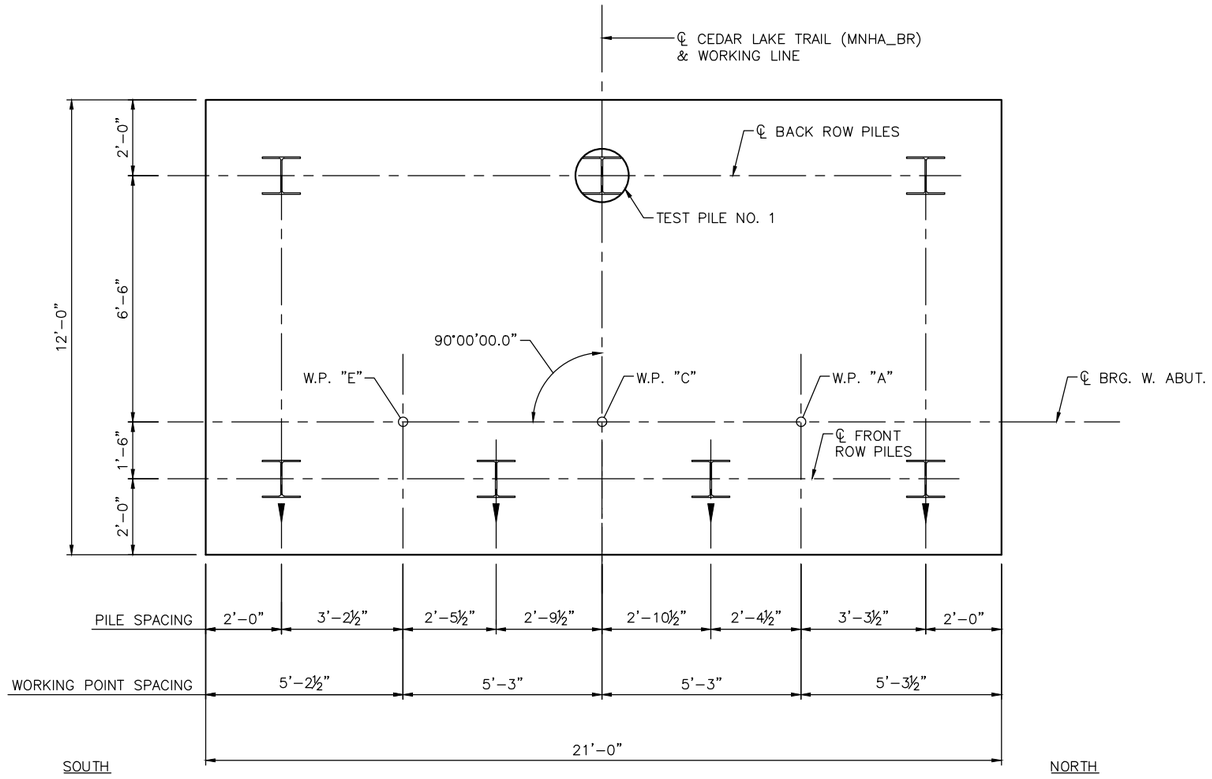

FOOTING PLAN

WEST ABUTMENT COMPUTED PILE LOAD - TONS/PILE	
FACTORED DEAD LOAD + EARTH PRESSURE	97.7
FACTORED LIVE LOAD	30.5
* FACTORED DESIGN LOAD	128.2

* BASED ON STRENGTH V LOAD COMBINATION.

WEST ABUTMENT REQUIRED NOMINAL PILE BEARING RESISTANCE FOR H-PILES Rn - TONS/PILE		
FIELD CONTROL METHOD	φdyn	* Rn
MN/DOT PILE FORMULA 2012 (MPF12) $R_n = 20\sqrt{\frac{W \times H}{1000}} x log\left(\frac{10}{S}\right)$	0.60	214
PDA	0.65	198

* Rn = (FACTORED DESIGN LOAD) / φdyn

GENERAL PILE NOTES

1 HP12x53 STEEL TEST PILES 75 FT. LONG
6 HP12x53 STEEL PILES EST. 75 FT. LENGTH
7 HP12x53 STEEL PILES REQ'D FOR WEST ABUT.

ALL PILES TO BE HP12x53 WITH PILE TIP PROTECTION.

PILE SPACING SHOWN IS AT BOTTOM OF FOOTING.

PILES MARKED THUS ⊥ TO BE BATTERED 3" PER FOOT IN DIRECTION SHOWN.

FOR PILE SPLICE DETAILS SEE DETAIL B202.

NO.	DATE	BY	CHECK	DESIGN	REVISION / SUBMITTAL

DESIGNED BY: BAW CHECKED BY: BLF
DRAWN BY: RHK CHECKED BY: BLF

AECOM Kimley»Horn

90% SUBMISSION - 01/22/16

METROPOLITAN COUNCIL

SOUTHWEST Green Line LRT Extension

CIVIL - VOLUME 4D
MINNEHAHA CREEK TRAIL BRIDGE
BRIDGE R0687
WEST ABUTMENT DETAILS 1

DISCIPLINE: STRUCTURES
SHEET NAME: CBRR0687-BRG-ABT-001-1

SHEET 4 OF 46

Dec, 10 2015 08:09 am V:\3400_ADC\CAD\SEGMENT E2\PLAN SHEETS\STRUCTURES\MNHA-TRL\CBRR0687-BRG-ABT-001.dwg By: brian.fleming

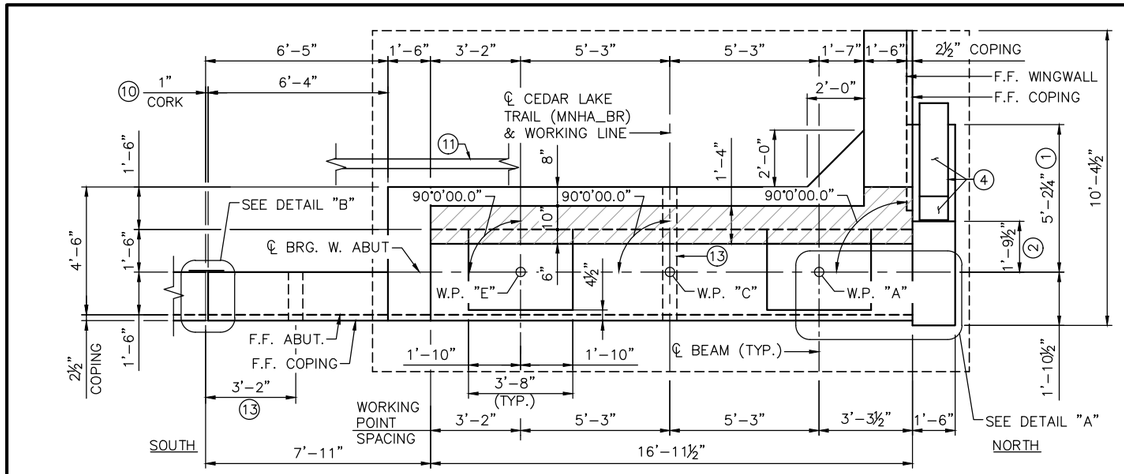

PLAN

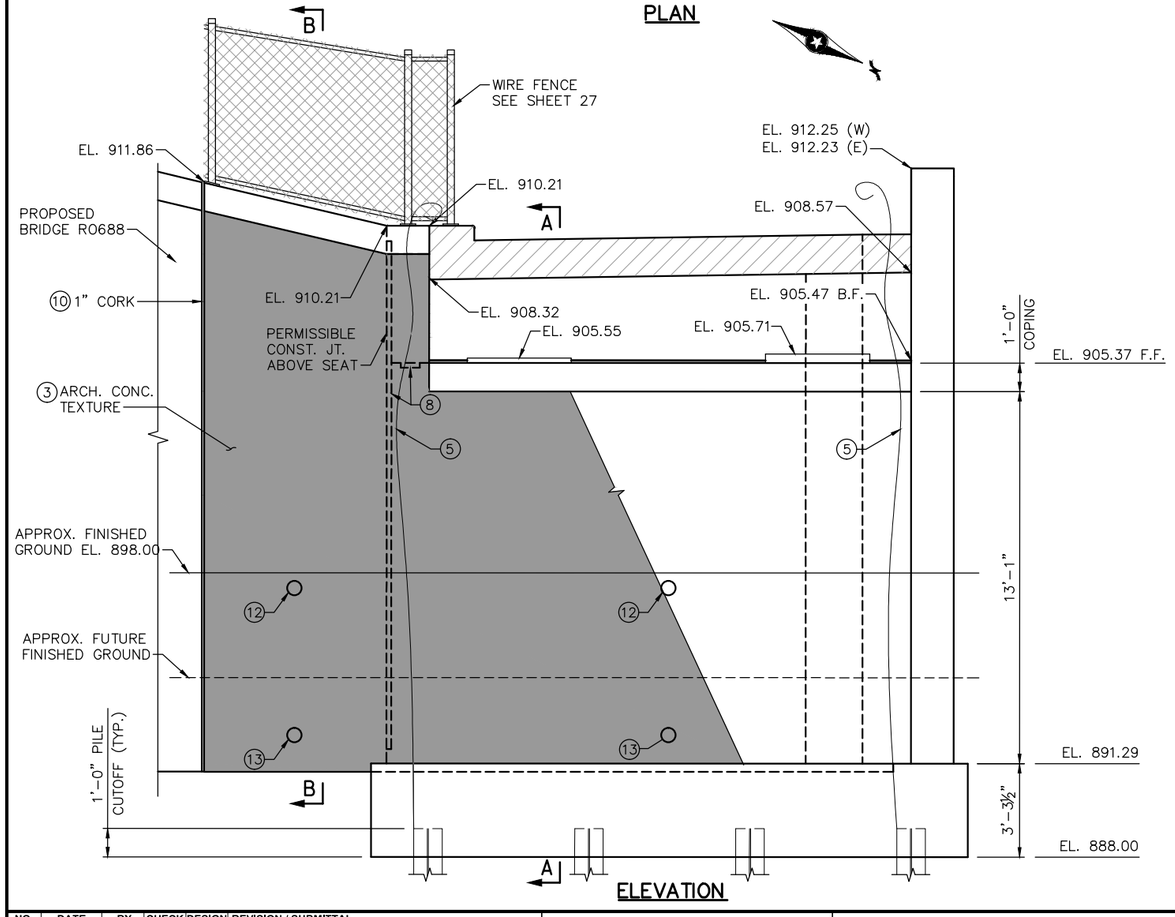

ELEVATION

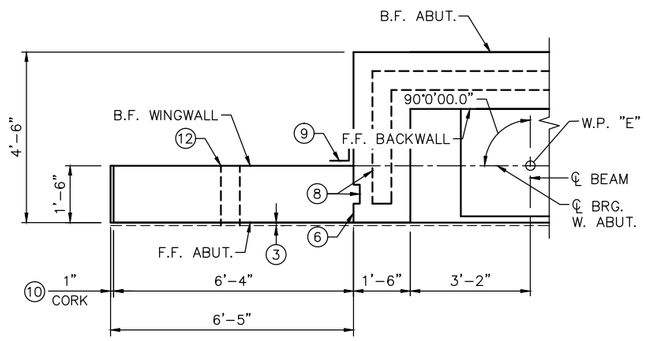

SOUTHWEST WINGWALL PLAN
(SECTION BELOW PAVING BLOCK)

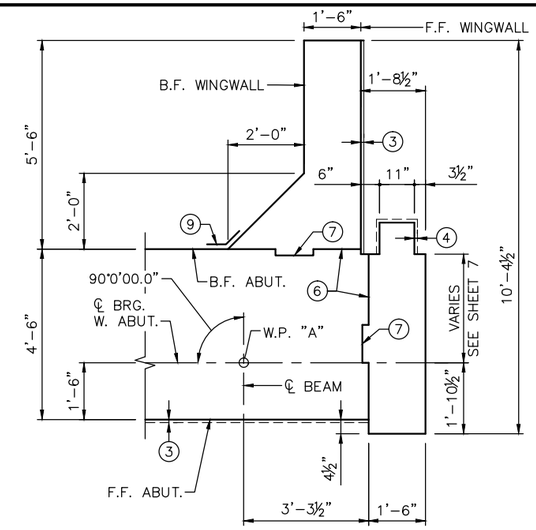

NORTHWEST WINGWALL PLAN
(SECTION BELOW ABUTMENT COPING)

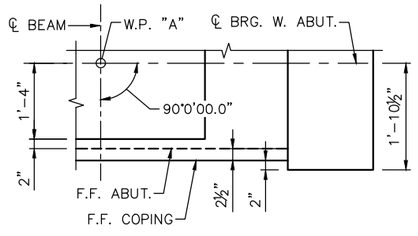

DETAIL "A"

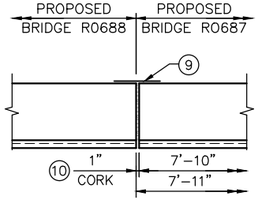

DETAIL "B"

NOTES:

SEE SHEET 6 FOR SECTIONS A–A & B–B.

SEE SHEET 26 FOR CORNER DETAILS.

PAVING BLOCK HATCHED AREA INDICATES THAT PORTION TO BE PLACED WITH THE SUPERSTRUCTURE CONCRETE.

(1) DIMENSION AT TOP OF FOOTING.

(2) DIMENSION AT TOP OF PILASTER.

(3) ARCHITECTURAL CONCRETE TEXTURE (STRIATED RELIEF) WITH ARCHITECTURAL SURFACE FINISH (SINGLE COLOR). THE APPROXIMATE THICKNESS OF ARCHITECTURAL CONCRETE IS 0.35".

(4) ARCHITECTURAL CONCRETE TEXTURE (LIMESTONE) WITH ARCHITECTURAL SURFACE FINISH (SINGLE COLOR). THE APPROXIMATE THICKNESS OF ARCHITECTURAL CONCRETE IS 0.50".

(5) ATTACH WIRE FENCE ANCHORAGE TO PILE WITH SOLID NO. 6 GAGE COPPER WIRE WITH AN APPROVED TYPE CLAMP OR BRAZING (ONE ANCHORAGE PER END OF RAIL). GROUND BOTH SIDES OF EXPANSION JOINT PIPE SLEEVE IF PRESENT. PAINT EXPOSED PORTION OF WIRE GRAY.

(6) CONSTRUCTION JOINT. 72 HOUR TIME DELAY REQUIRED BETWEEN ADJACENT POURS TO ALLOW FOR SHRINKAGE.

(7) 2" X 12" KEYWAY

(8) 2" X 6" KEYWAY

(9) MEMBRANE WATERPROOFING SYSTEM PER SPEC. 2481.3.B.

(10) ELECTRICAL INSULATING CORK BARRIER. CONTRACTOR AND FIELD ENGINEER SHALL VERIFY WINGWALL CONCRETE IS SEPARATED AND CONDUCTIVE MATERIAL DOES NOT EXTEND THROUGH CORK.

(11) 4" DIA. PERFORATED DRAIN PIPE. SEE DETAIL B910.

(12) 6" DIA. PIPE SLEEVE FOR DRAIN PIPE. SEE DETAIL B910, SHEET 37. INVERT SLEEVE AT FRONT FACE OF ABUTMENT, EL. 897.22 WITH A MINIMUM SLOPE UP OF ⅛"/FT TO BACKFACE.

(13) 4" DIA. DRAIN. END FLUSH WITH SURFACE OF FRONT FACE. PLACE 1 FT. X 1 FT. SQUARE PIECE OF GEOTEXTILE FILTER TYPE VII OVER END OF DRAIN. INVERT DRAIN AT FRONT FACE OF ABUTMENT EL. 892.29 WITH A MINIMUM SLOPE UP OF ⅛"/FT TO BACKFACE.

NO.	DATE	BY	CHECK	DESIGN	REVISION / SUBMITTAL

DESIGNED BY: BAW CHECKED BY: BLF
DRAWN BY: RHK CHECKED BY: BLF

AECOM Kimley»Horn

90% SUBMISSION - 01/22/16

METROPOLITAN COUNCIL

SOUTHWEST Green Line LRT Extension

CIVIL - VOLUME 4D
MINNEHAHA CREEK TRAIL BRIDGE
BRIDGE R0687
WEST ABUTMENT DETAILS 2

DISCIPLINE: STRUCTURES
SHEET NAME: CBRR0687-BRG-ABT-001-2

SHEET 5 OF 46

Dec, 10 2015 08:09 am V:\3400_ADC\CAD\SEGMENT E2\PLAN SHEETS\STRUCTURES\MNHA-TRL\CBRR0687-BRG-ABT-001.dwg By: brian.fleming

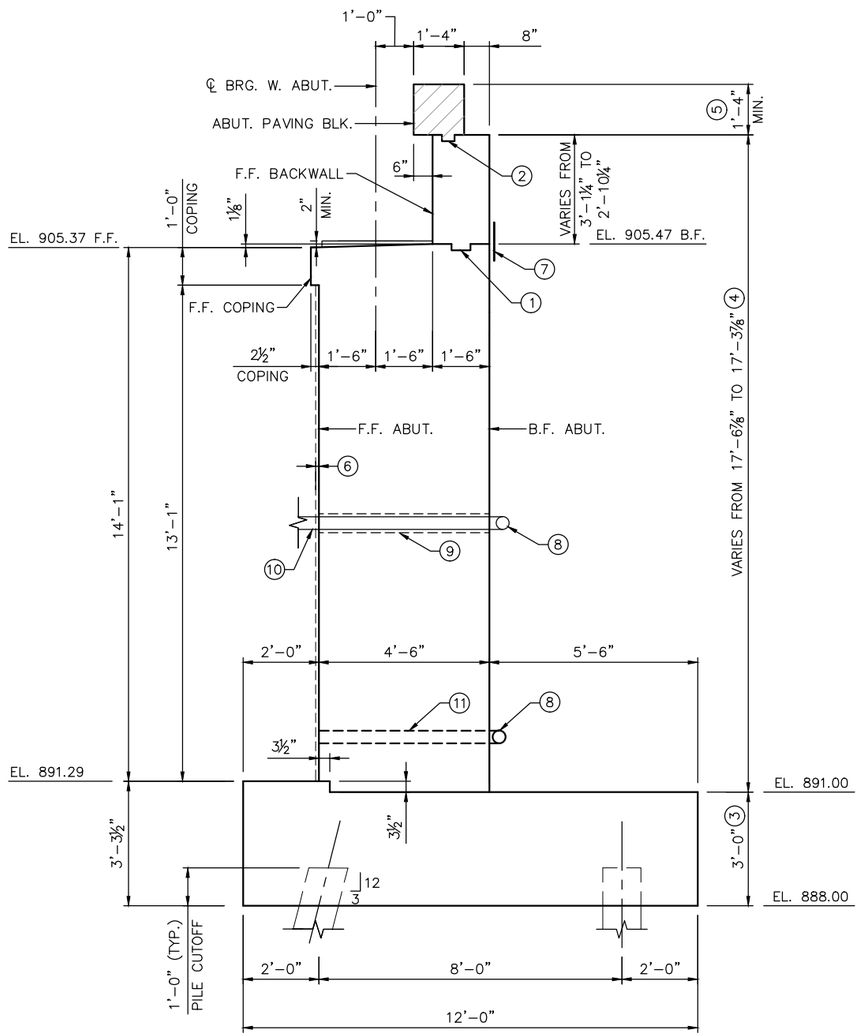

SECTION A–A

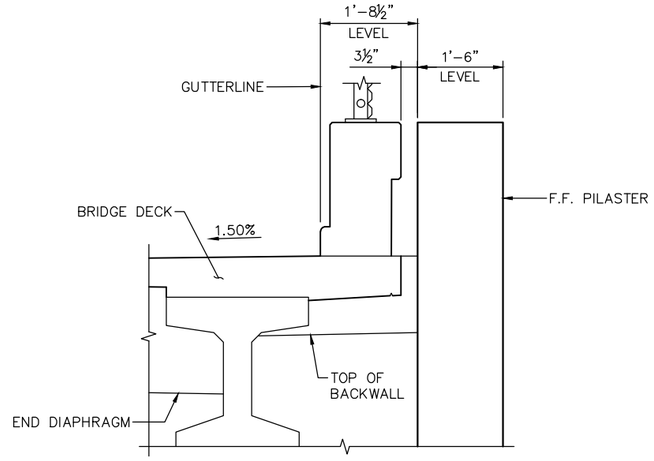

NORTHWEST CORNER ELEVATION

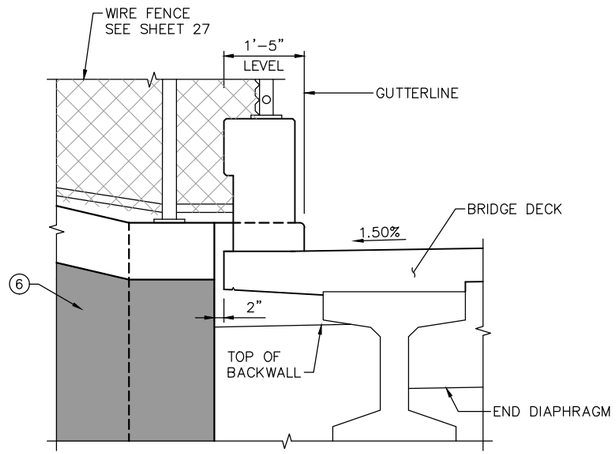

SOUTHWEST CORNER ELEVATION

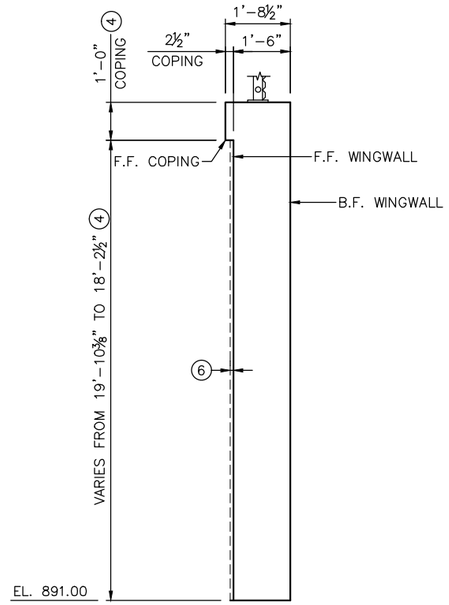

SECTION B–B

NOTES:

SEE SHEET 5 FOR LOCATIONS OF SECTIONS A–A & B–B.

PAVING BLOCK HATCHED AREA INDICATES THAT PORTION TO BE PLACED WITH THE SUPERSTRUCTURE CONCRETE.

(1) PERMISSIBLE CONSTRUCTION JOINT WITH 2" x 6" KEY CENTERED IN WALL.

(2) CONSTRUCTION JOINT WITH 2" x 4" KEY.

(3) STRUCTURAL CONCRETE (1G52).

(4) STRUCTURAL CONCRETE (3B52).

(5) BRIDGE SLAB CONCRETE (3YHPC–M). SEE SUPERSTRUCTURE DETAILS.

(6) ARCHITECTURAL CONCRETE TEXTURE (STRIATED RELIEF) WITH ARCHITECTURAL SURFACE FINISH (SINGLE COLOR). THE APPROXIMATE THICKNESS OF ARCHITECTURAL CONCRETE IS 0.35".

(7) MEMBRANE WATERPROOFING SYSTEM PER SPEC. 2481.3.B.

(8) 4" DIA. PERFORATED DRAIN PIPE. SEE DETAIL B910, SEE SHEET 37.

(9) 6" DIA. PIPE SLEEVE FOR DRAIN PIPE. SEE DETAIL B910, SHEET 37. INVERT SLEEVE AT FRONT FACE OF ABUTMENT, EL. 897.22 WITH A MINIMUM SLOPE UP OF ⅛"/FT TO BACKFACE.

(10) 4" DIA. NON–PERFORATED DRAIN PIPE TO CONCRETE HEADWALL. SEE DETAIL B910, SEE SHEET 37.

(11) 4" DIA. DRAIN. END FLUSH WITH SURFACE OF FRONT FACE. PLACE 1 FT. X 1 FT. SQUARE PIECE OF GEOTEXTILE FILTER TYPE VII OVER END OF DRAIN. INVERT DRAIN AT FRONT FACE OF ABUTMENT EL. 892.29 WITH A MINIMUM SLOPE OF ⅛"/FT. TO BACKFACE.

NO.	DATE	BY	CHECK	DESIGN	REVISION / SUBMITTAL

DESIGNED BY: BAW | CHECKED BY: BLF
DRAWN BY: RHK | CHECKED BY: BLF

AECOM Kimley»Horn

90% SUBMISSION - 01/22/16

METROPOLITAN COUNCIL

SOUTHWEST Green Line LRT Extension

CIVIL - VOLUME 4D
MINNEHAHA CREEK TRAIL BRIDGE
BRIDGE R0687
WEST ABUTMENT DETAILS 3

DISCIPLINE: STRUCTURES
SHEET NAME: CBRR0687-BRG-ABT-001-3

SHEET 6 OF 46

Dec, 10 2015 08:09 am V:\3400_ADC\CAD\SEGMENT E2\PLAN SHEETS\STRUCTURES\MNHA-TRL\CBRR0687-BRG-ABT-001.dwg By: brian.fleming

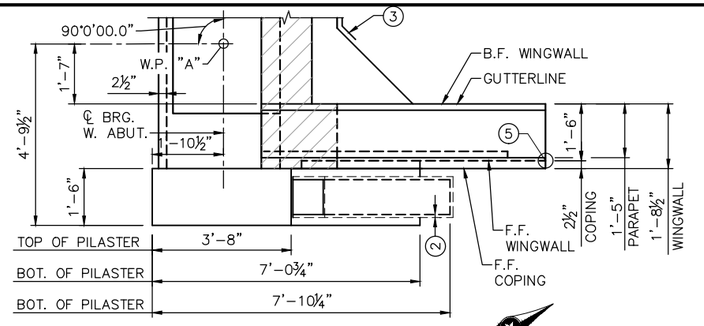

NORTHWEST WINGWALL PLAN

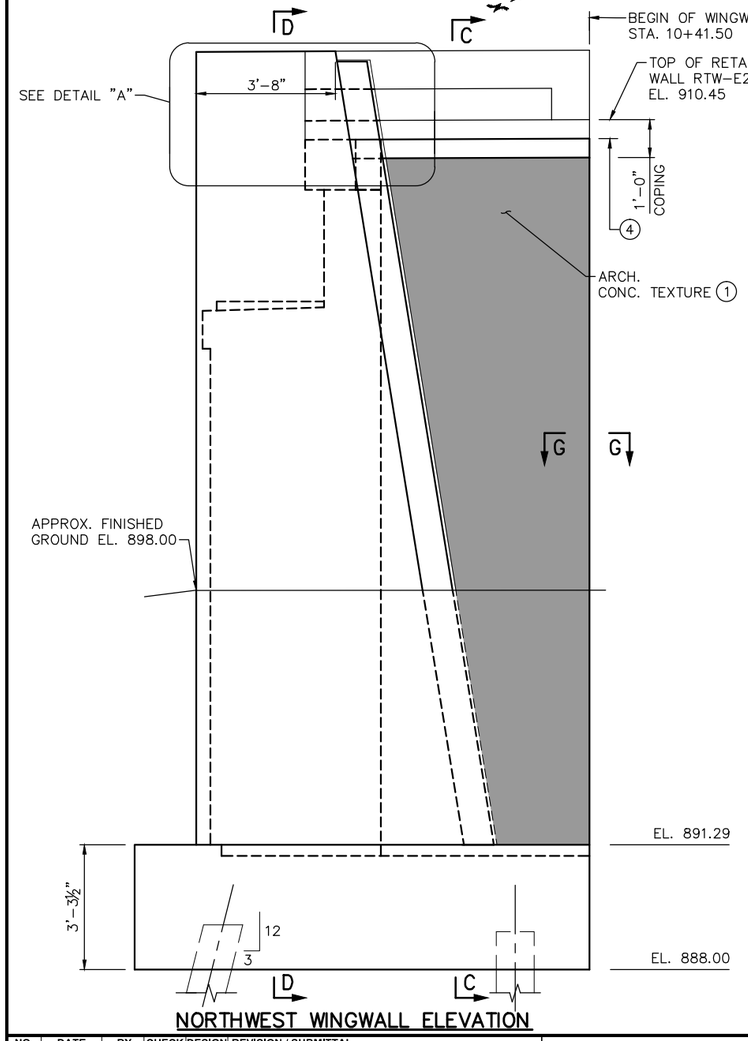

NORTHWEST WINGWALL ELEVATION

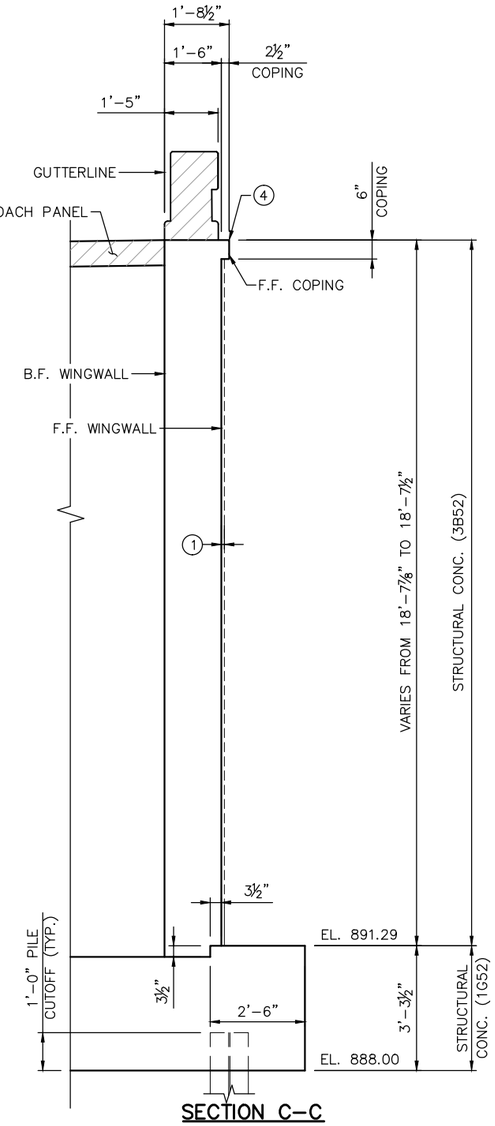

SECTION C–C

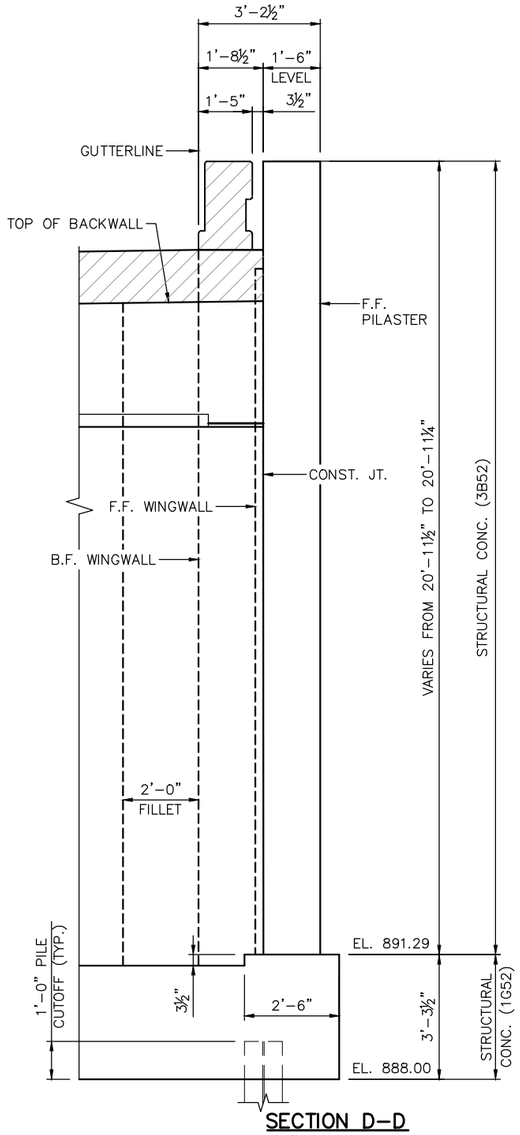

SECTION D–D

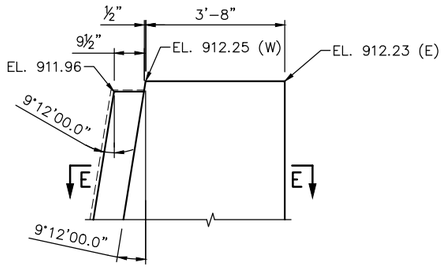

DETAIL "A"
(SOUTH PILASTER FACE SHOWN)

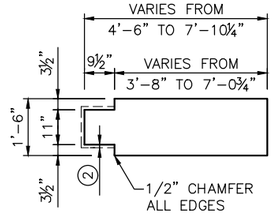

SECTION E–E

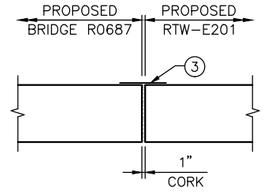

SECTION G–G

NOTES:

HATCHED AREA INDICATES THAT PORTION TO BE PLACED WITH THE SUPERSTRUCTURE CONCRETE.

(1) ARCHITECTURAL CONCRETE TEXTURE (STRIATED RELIEF) WITH ARCHITECTURAL SURFACE FINISH (SINGLE COLOR). THE APPROXIMATE THICKNESS OF ARCHITECTURAL CONCRETE IS 0.35".

(2) ARCHITECTURAL CONCRETE TEXTURE (LIMESTONE) WITH ARCHITECTURAL SURFACE FINISH (SINGLE COLOR). THE APPROXIMATE THICKNESS OF ARCHITECTURAL CONCRETE IS 0.50".

(3) MEMBRANE WATERPROOFING SYSTEM PER SPEC. 2481.3.B.

(4) TOP OF WINGWALL EL. 909.92 AT BACKFACE OF ABUTMENT. TOP OF WINGWALL EL. 909.95 AT BEGIN OF WINGWALL, WEST END.

(5) FRONT FACE OF WINGWALL AT RTW–E201 INTERFACE. X =501276.742 ; Y =150931.163.

NO.	DATE	BY	CHECK	DESIGN	REVISION / SUBMITTAL

DESIGNED BY: BAW CHECKED BY: BLF
DRAWN BY: RHK CHECKED BY: BLF

AECOM Kimley»Horn

90% SUBMISSION - 01/22/16

METROPOLITAN COUNCIL

SOUTHWEST Green Line LRT Extension

CIVIL - VOLUME 4D
MINNEHAHA CREEK TRAIL BRIDGE
BRIDGE R0687
WEST ABUTMENT DETAILS 4

DISCIPLINE: STRUCTURES
SHEET NAME: CBRR0687-BRG-ABT-001-4

SHEET 7 OF 46

Dec, 10 2015 08:09 am v:\3400_ADC\CAD\SEGMENT E2\PLAN SHEETS\STRUCTURES\MNHA-TRL\CBRR0687-BRG-ABT-001.dwg By: brian.fleming

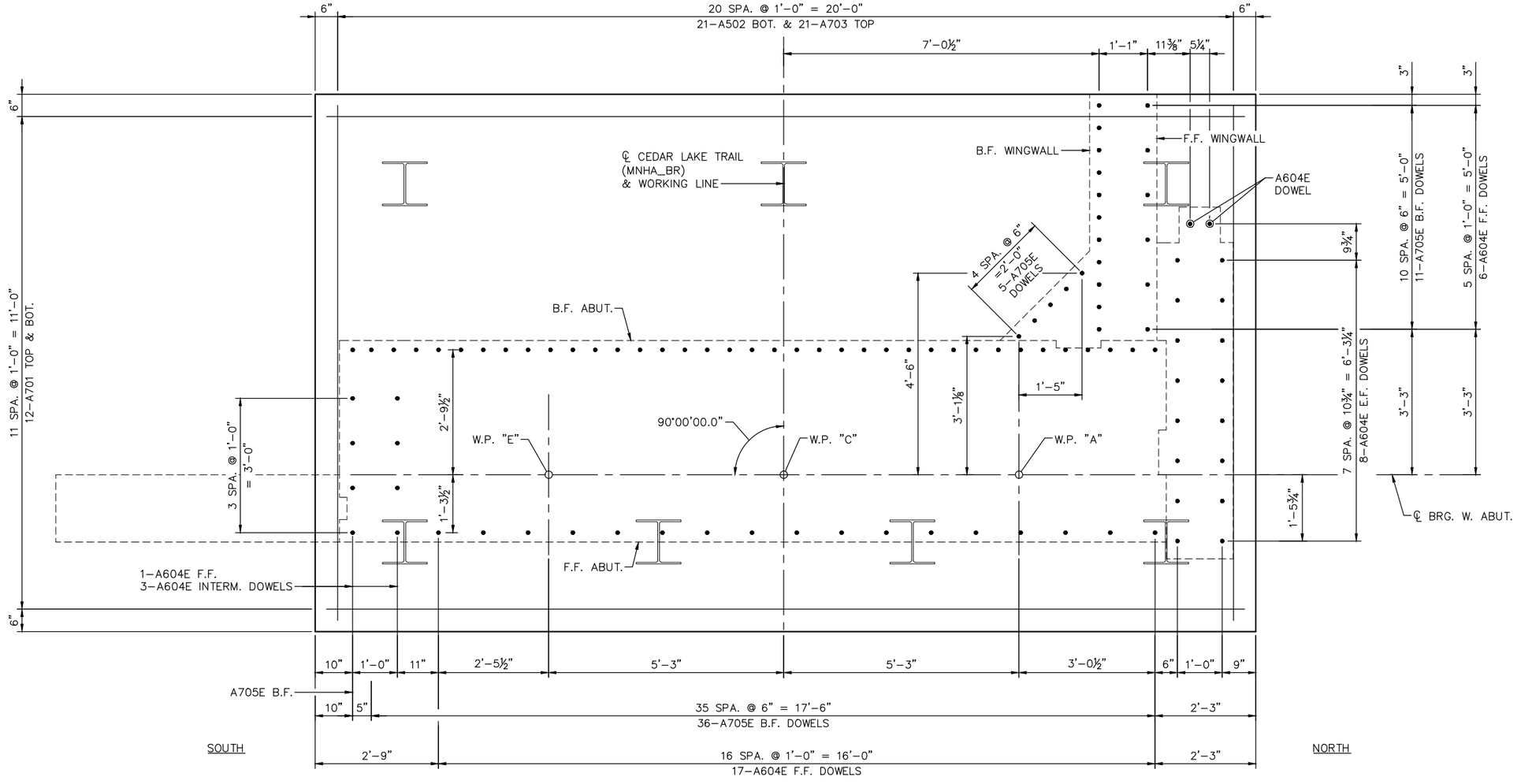

FOOTING PLAN

NO.	DATE	BY	CHECK	DESIGN	REVISION / SUBMITTAL

DESIGNED BY: BAW | CHECKED BY: BLF
DRAWN BY: NAO | CHECKED BY: BLF

AECOM Kimley»Horn

90% SUBMISSION - 01/22/16

METROPOLITAN COUNCIL

SOUTHWEST Green Line LRT Extension

CIVIL - VOLUME 4D
MINNEHAHA CREEK TRAIL BRIDGE
BRIDGE R0687
WEST ABUTMENT REINFORCEMENT 1

DISCIPLINE: STRUCTURES
SHEET NAME: CBRR0687-BRG-ABT-001-5

SHEET 8 OF 46

Dec, 10 2015 08:09 am V:\3400_ADC\CAD\SEGMENT E2\PLAN SHEETS\STRUCTURES\MNHA-TRL\CBRR0687-BRG-ABT-001.dwg By: brian.fleming

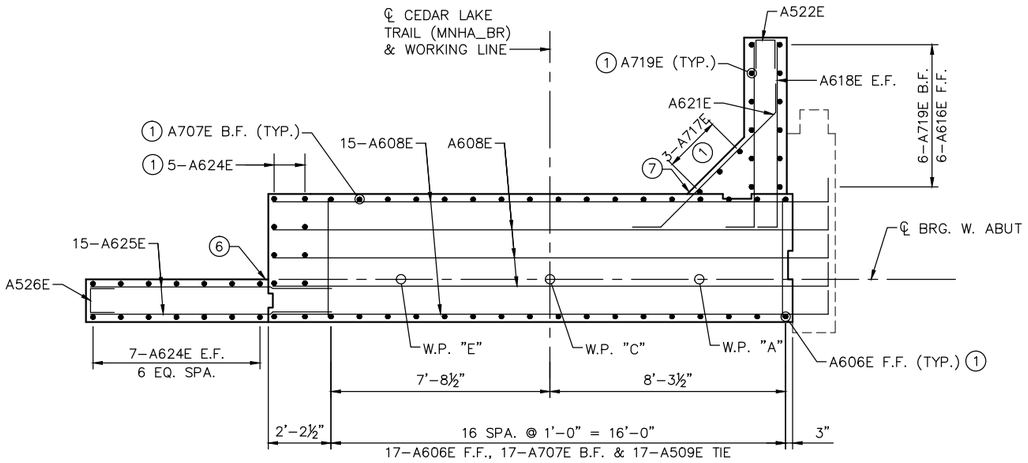

SECTION H–H

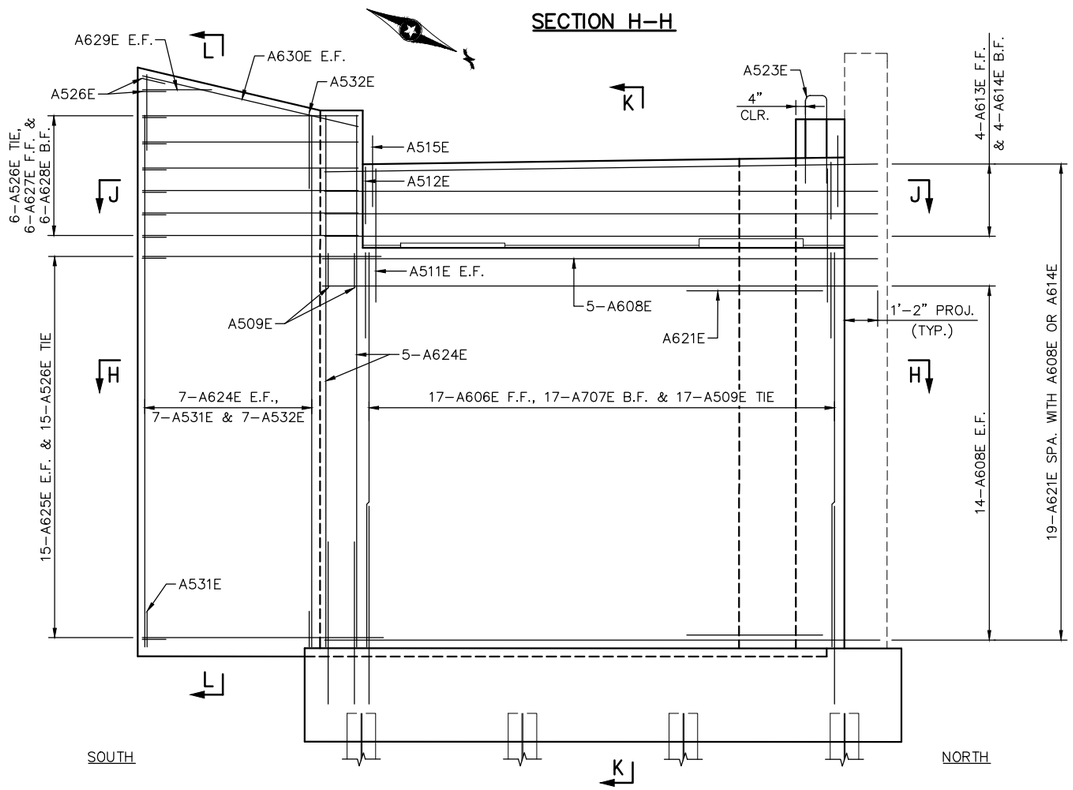

ELEVATION

(PILASTER NOT SHOWN FOR CLARITY)

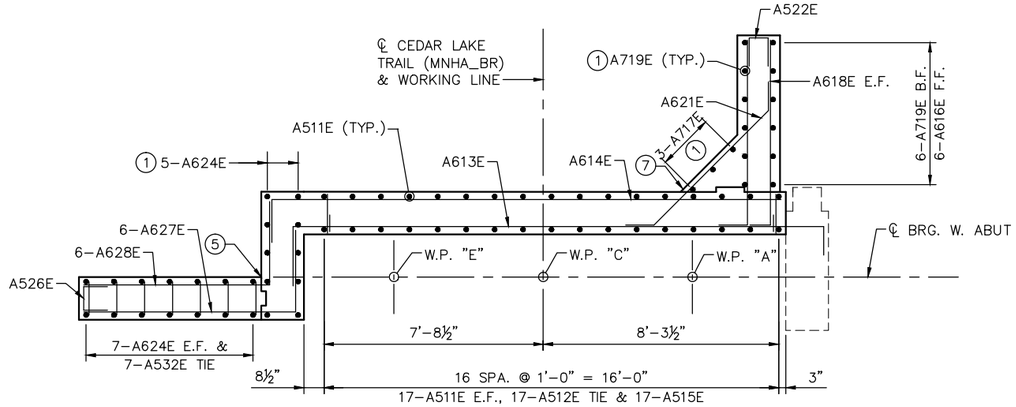

SECTION J–J

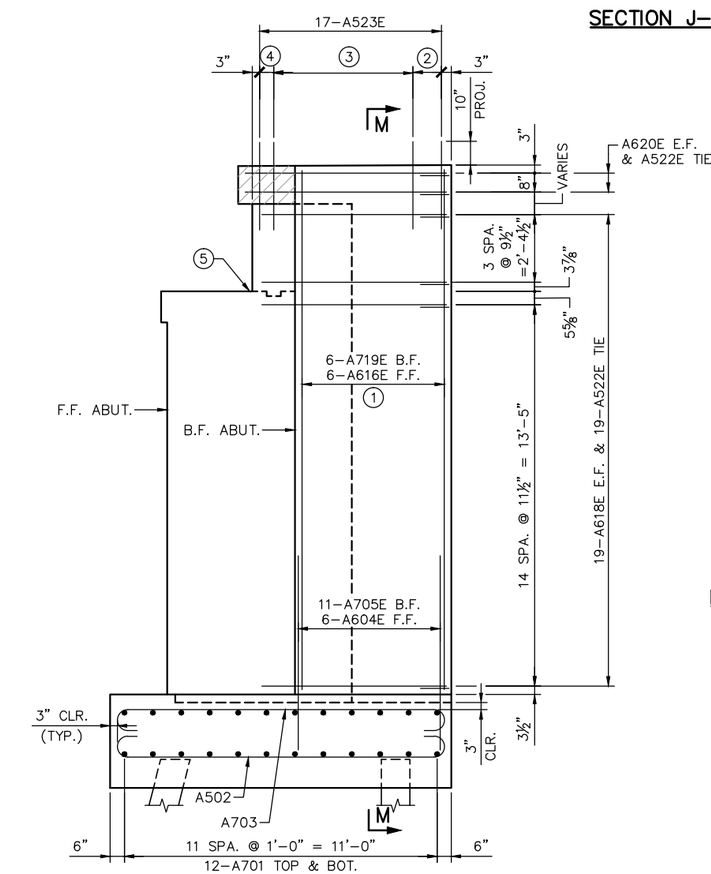

NORTHWEST WINGWALL ELEVATION

(PILASTER NOT SHOWN FOR CLARITY)

NOTES:

SEE SHEET 10 FOR SECTIONS K–K, L–L, & M–M.

PILASTER REINFORCEMENT EXCLUDED FROM THIS SHEET FOR CLARITY, SEE SHEET 11.

1. SPACE WITH DOWEL BARS.
2. 2 SPA. @ 3" = 6"
3. 10 SPA. @ 6" = 5'–0"
4. 4 SPA. @ 3" = 1'–0"
5. PERMISSIBLE CONST. JT. WITH 2" x 6" KEYWAY.
6. CONST. JT. WITH 2" x 6" KEYWAY.
7. CONST. JT. WITH 2" x 12" KEYWAY.

NO.	DATE	BY	CHECK	DESIGN	REVISION / SUBMITTAL

DESIGNED BY: BAW | CHECKED BY: BLF
DRAWN BY: NAO | CHECKED BY: BLF

AECOM Kimley»Horn

90% SUBMISSION - 01/22/16

METROPOLITAN COUNCIL

SOUTHWEST Green Line LRT Extension

CIVIL - VOLUME 4D
MINNEHAHA CREEK TRAIL BRIDGE
BRIDGE R0687
WEST ABUTMENT REINFORCEMENT 2

DISCIPLINE: STRUCTURES
SHEET NAME: CBRR0687-BRG-ABT-001-6

SHEET 9 OF 46

Dec, 10 2015 08:09 am V:\3400_ADC\CAD\SEGMENT E2\PLAN SHEETS\STRUCTURES\MNHA-TRL\CBRR0687-BRG-ABT-001.dwg By: brian.fleming

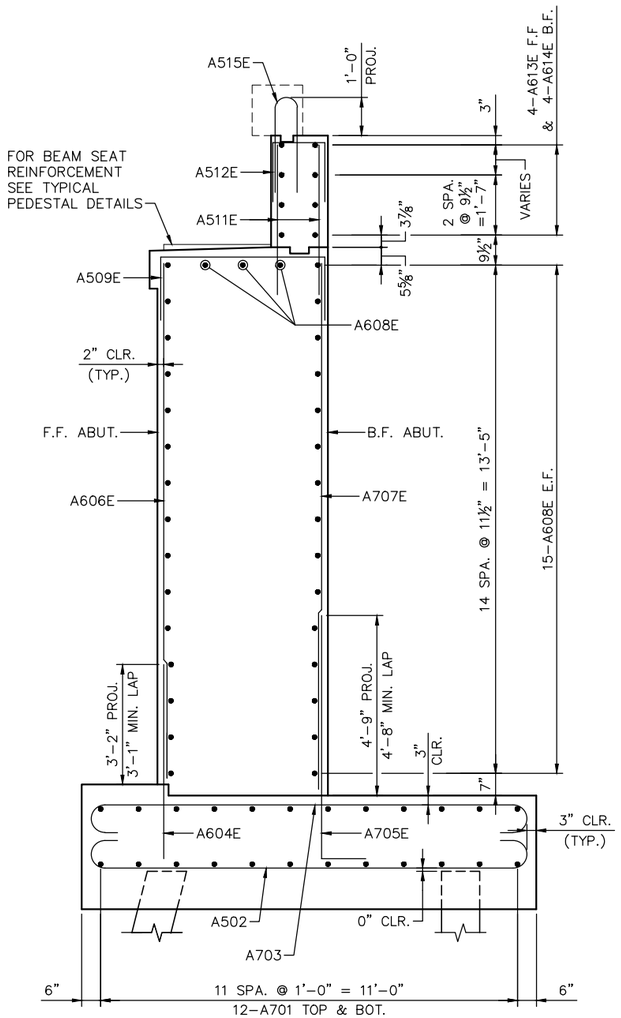

SECTION K-K

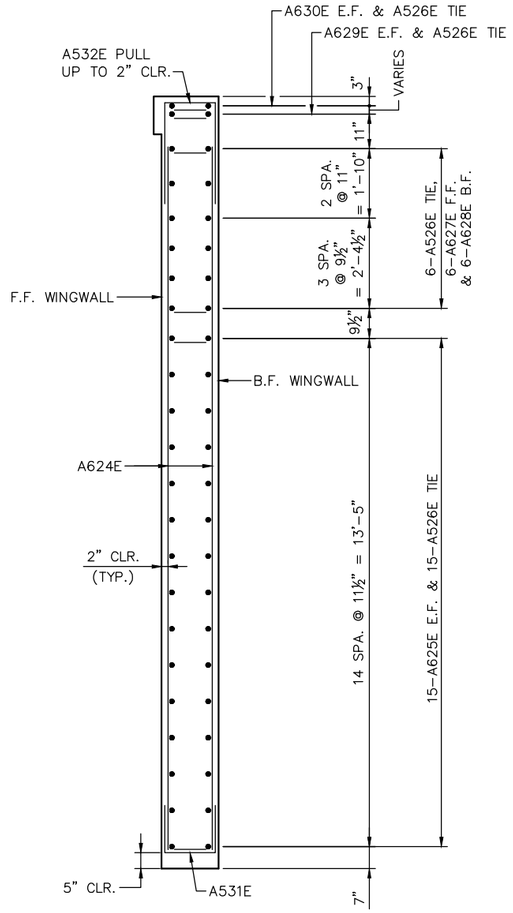

SECTION L-L

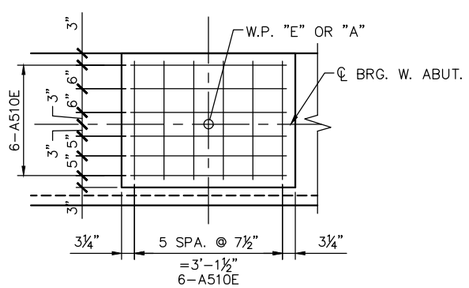

TYPICAL PEDESTAL PLAN

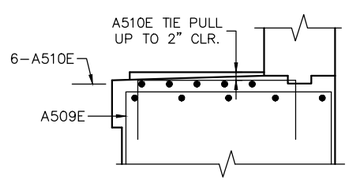

TYPICAL PEDESTAL SECTION

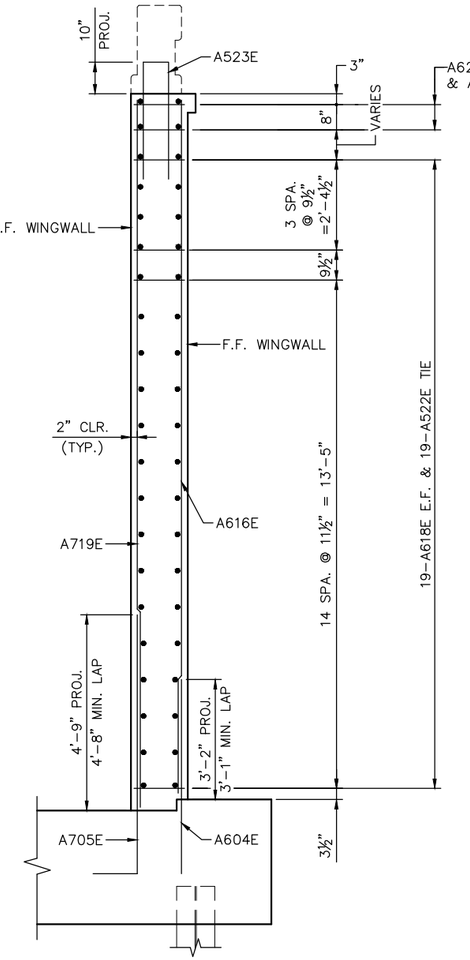

SECTION M-M

NOTES:

SEE SHEET 9 FOR LOCATIONS OF SECTIONS K-K, L-L, & M-M.

NO.	DATE	BY	CHECK	DESIGN	REVISION / SUBMITTAL

DESIGNED BY: BAW | CHECKED BY: BLF
DRAWN BY: NAO | CHECKED BY: BLF

AECOM Kimley»Horn

90% SUBMISSION - 01/22/16

METROPOLITAN COUNCIL

SOUTHWEST Green Line LRT Extension

CIVIL - VOLUME 4D
MINNEHAHA CREEK TRAIL BRIDGE
BRIDGE R0687
WEST ABUTMENT REINFORCEMENT 3

DISCIPLINE: STRUCTURES
SHEET NAME: CBRR0687-BRG-ABT-001-7

SHEET 10 OF 46

Dec, 10 2015 08:09 am V:\3400_ADC\CAD\SEGMENT E2\PLAN SHEETS\STRUCTURES\MNHA-TRL\CBRR0687-BRG-ABT-001.dwg By: brian.fleming

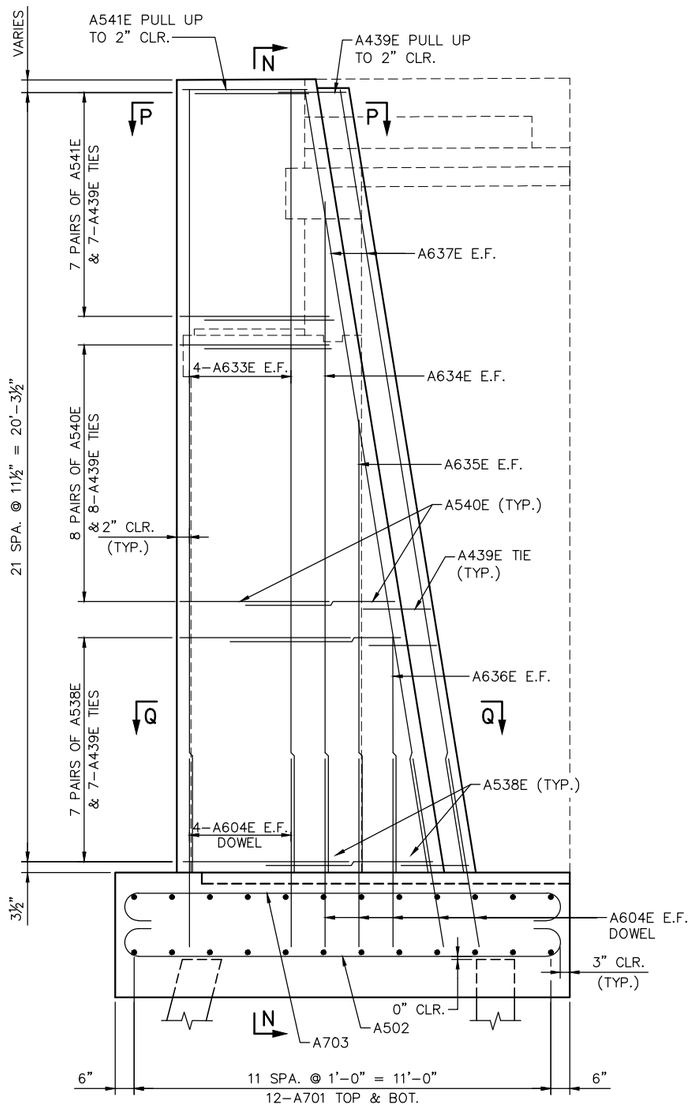

NORTHWEST PILASTER ELEVATION

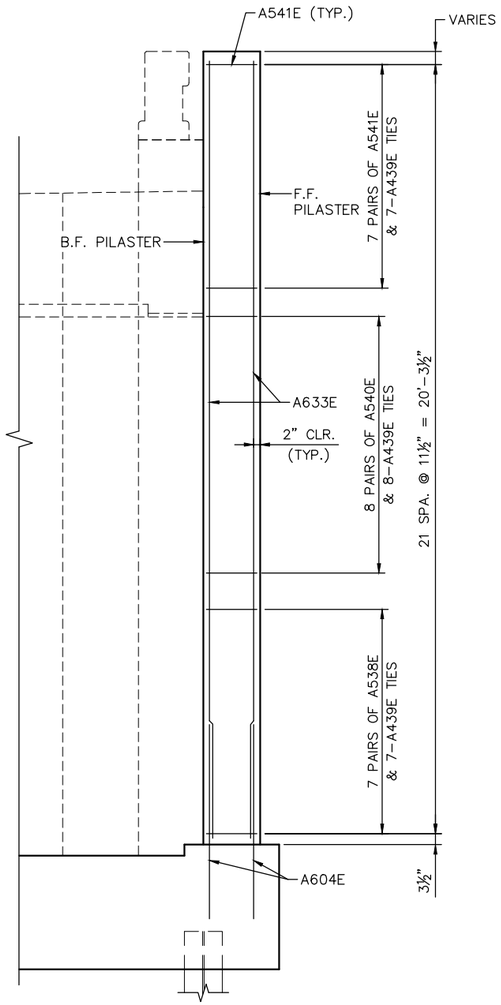

SECTION N-N

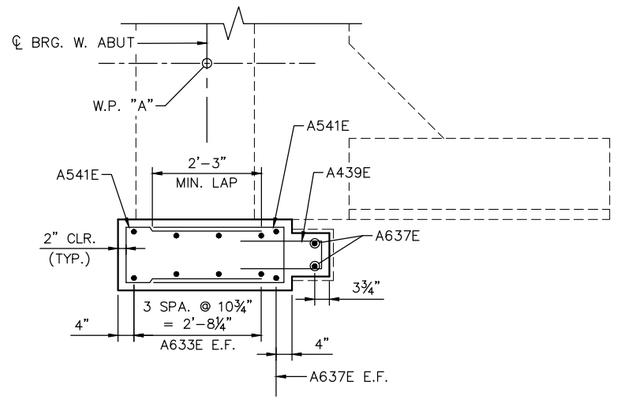

SECTION P-P

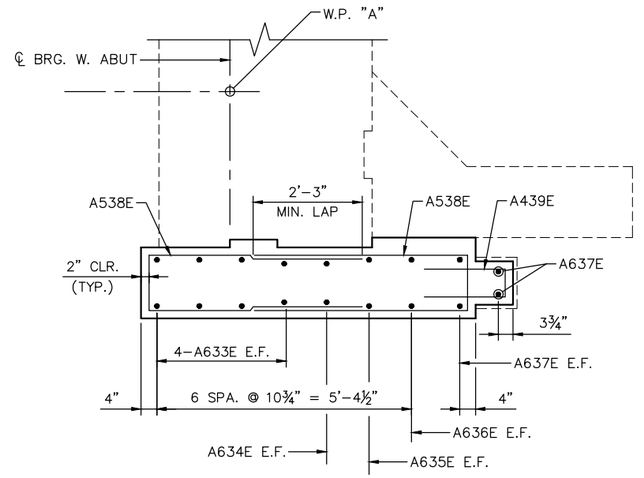

SECTION Q-Q

NO.	DATE	BY	CHECK	DESIGN	REVISION / SUBMITTAL

DESIGNED BY: BAW CHECKED BY: BLF
DRAWN BY: NAO CHECKED BY: BLF

AECOM Kimley»Horn

90% SUBMISSION - 01/22/16

METROPOLITAN COUNCIL

SOUTHWEST Green Line LRT Extension

CIVIL - VOLUME 4D
MINNEHAHA CREEK TRAIL BRIDGE
BRIDGE R0687
WEST ABUTMENT REINFORCEMENT 4

DISCIPLINE: STRUCTURES
SHEET NAME: CBRR0687-BRG-ABT-001-8

SHEET 11 OF 46

Dec, 10 2015 08:09 am V:\3400_ADC\CAD\SEGMENT E2\PLAN SHEETS\STRUCTURES\MNHA-TRL\CBRR0687-BRG-ABT-001.dwg By: brian.fleming

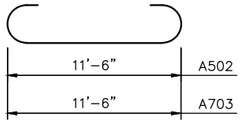

A502 & A703

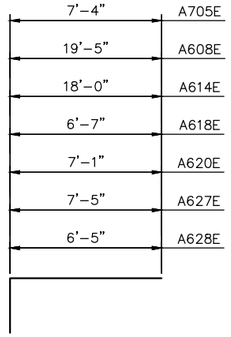

A705E, A608E, A614E, A618E, A620E A627E, & A628E

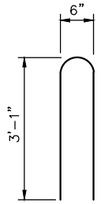

A515E

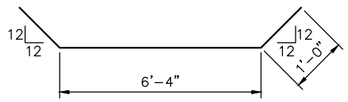

A621E

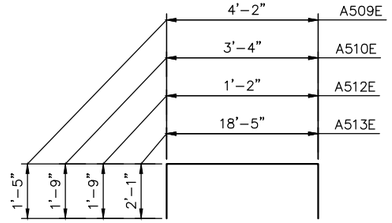

A509E, A510E, A512E, & A513E

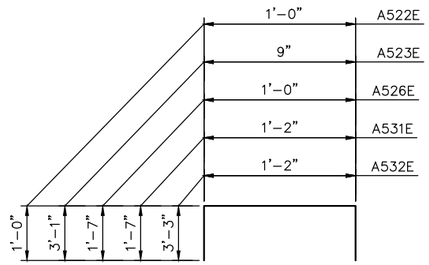

A522E, A523E, A526E, A531E, & A532E

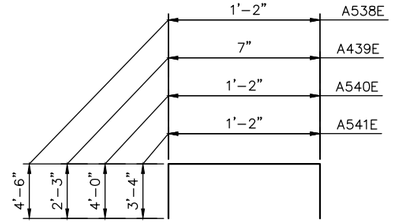

A538E, A439E, A540E, & A541E

BILL OF REINFORCEMENT FOR WEST ABUTMENT

BAR	NO.	LENGTH	SHAPE	LOCATION
A701	24	20'-6"	STR.	FOOTING, LONG. TOP & BOT.
A502	21	12'-8"	BENT	FOOTING, LONG. TOP & BOT.
A703	21	13'-2"	BENT	FOOTING,TRANS.BOT.
A604E	49	5'-7"	STR.	FOOTING,TRANS.TOP
A705E	53	8'-1"	BENT	FOOTING, B.F. DOWEL
A606E	17	13'-9"	STR.	FOOTING,F.F DOWEL
A707E	17	14'-1"	STR.	STEM, VERT. B.F.
A608E	33	20'-5"	BENT	STEM, LONG.
A509E	19	7'-0"	BENT	STEM,TOP TIE
A510E	24	6'-10"	BENT	PEDESTAL, TIE
A511E	34	5'-3"	STR.	BACKWALL, VERT. E.F.
A512E	17	4'-8"	BENT	BACKWALL,TOP TIE
A613E	4	21'-6"	BENT	BACKWALL, HORZ. F.F.
A614E	4	20'-1"	BENT	BACKWALL, HORZ. B.F.
A515E	17	6'-8"	BENT	BACKWALL SWLK E.F.
A616E	6	18'-4"	STR.	WINGWALL VERT. F.F.
A717E	3	17'-4"	STR.	WINGWALL VERT. B.F.
A618E	38	7'-7"	STR.	WINGWALL HORIZ. E.F.
A719E	6	18'-7"	BENT	WINGWALL VERT. B.F.
A620E	4	8'-1"	BENT	WINGWALL HORIZ.
A621E	19	8'-4"	BENT	WINGWALL HORIZ. TIE
A522E	21	4'-2"	BENT	WINGWALL HORIZ TIE
A523E	17	6'-11"	BENT	WINGWALL VERT. TIE
A624E	24	18'-8"	STR.	WINGWALL VERT. E.F.
A625E	30	9'-8"	STR.	WINGWALL, HORZ. E.F.
A526E	23	4'-2"	BENT	WINGWALL, END TIE
A627E	6	10'-5"	BENT	WINGWALL, HORZ. TIE F.F.
A628E	6	9'-3"	BENT	WINGWALL, HORZ. TIE B.F.
A629E	2	2'-5"	STR.	WINGWALL, HORZ. E.F.
A630E	2	7'-7"	STR.	WINGWALL, HORZ. E.F.
A531E	7	4'-4"	BENT	WINGWALL, BOT. TIE
A532E	7	7'-8"	BENT	WINGWALL, TOP TIE
A633E	8	20'-8"	STR.	PILASTER VERT. E.F.
A634E	2	18'-0"	STR.	PILASTER VERT. E.F.
A635E	2	12'-6"	STR.	PILASTER VERT. E.F.
A636E	2	7'-0"	STR.	PILASTER VERT. E.F.
A637E	4	20'-9"	STR.	PILASTER VERT. E.F.
A538E	14	10'-2"	BENT	PILASTER TIE PAIRED
A439E	22	5'-1"	BENT	PILASTER TIE
A540E	16	9'-2"	BENT	PILASTER TIE PAIRED
A541E	14	7'-10"	BENT	PILASTER TIE PAIRED

Dec, 10 2015 08:09 am V:\3400_ADC\CAD\SEGMENT E2\PLAN SHEETS\STRUCTURES\MNHA-TRL\CBRR0687-BRG-ABT-001.dwg By: brian.fleming

NO.	DATE	BY	CHECK	DESIGN	REVISION / SUBMITTAL

DESIGNED BY: BAW | CHECKED BY: BLF
DRAWN BY: RHK | CHECKED BY: BLF

AECOM Kimley»Horn

90% SUBMISSION - 01/22/16

METROPOLITAN COUNCIL

SOUTHWEST Green Line LRT Extension

CIVIL - VOLUME 4D
MINNEHAHA CREEK TRAIL BRIDGE
BRIDGE R0687
WEST ABUTMENT REINFORCEMENT 5

DISCIPLINE: STRUCTURES
SHEET NAME: CBRR0687-BRG-ABT-001-9

SHEET 12 OF 46

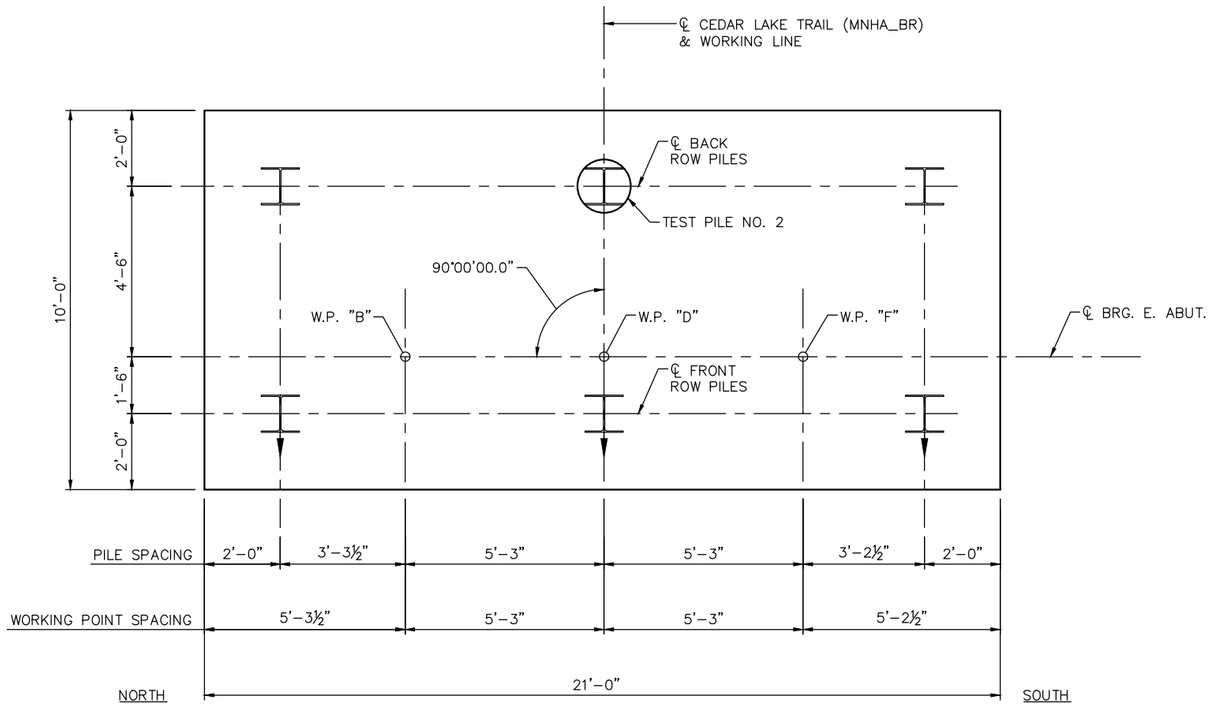

FOOTING PLAN

EAST ABUTMENT COMPUTED PILE LOAD - TONS/PILE	
FACTORED DEAD LOAD + EARTH PRESSURE	79.4
FACTORED LIVE LOAD	33.1
* FACTORED DESIGN LOAD	112.5

* BASED ON STRENGTH V LOAD COMBINATION.

EAST ABUTMENT REQUIRED NOMINAL PILE BEARING RESISTANCE FOR H-PILES Rn - TONS/PILE		
FIELD CONTROL METHOD	φdyn	* Rn
MN/DOT PILE FORMULA 2012 (MPF12) $R_n = 20\sqrt{\frac{W \times H}{1000}} x log\left(\frac{10}{S}\right)$	0.60	188
PDA	0.65	174

* Rn = (FACTORED DESIGN LOAD) / φdyn

GENERAL PILE NOTES

1 HP12x53 STEEL TEST PILES 75 FT. LONG
5 HP12x53 STEEL PILES EST. 75 FT. LENGTH
6 HP12x53 STEEL PILES REQ'D FOR EAST ABUT.

ALL PILES TO BE HP12x53 WITH PILE TIP PROTECTION.

PILE SPACING SHOWN IS AT BOTTOM OF FOOTING.

PILES MARKED THUS ⊥ TO BE BATTERED 3" PER FOOT IN DIRECTION SHOWN.

FOR PILE SPLICE DETAILS SEE DETAIL B202.

NO.	DATE	BY	CHECK	DESIGN	REVISION / SUBMITTAL

DESIGNED BY: BAW CHECKED BY: BLF
DRAWN BY: NAO CHECKED BY: BLF

AECOM Kimley»Horn

90% SUBMISSION - 01/22/16

METROPOLITAN COUNCIL

SOUTHWEST Green Line LRT Extension

CIVIL - VOLUME 4D
MINNEHAHA CREEK TRAIL BRIDGE
BRIDGE R0687
EAST ABUTMENT DETAILS 1

DISCIPLINE: STRUCTURES
SHEET NAME: CBRR0687-BRG-ABT-002-1

SHEET 13 OF 46

Dec, 10 2015 08:10 am V:\3400_ADC\CAD\SEGMENT E2\PLAN SHEETS\STRUCTURES\MNHA-TRL\CBRR0687-BRG-ABT-002.dwg By: brian.fleming

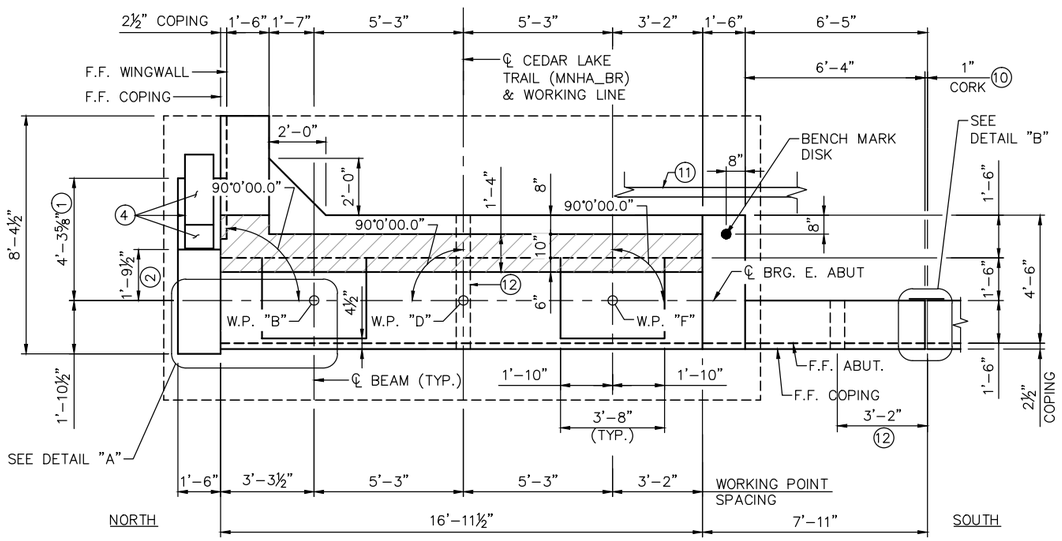

PLAN

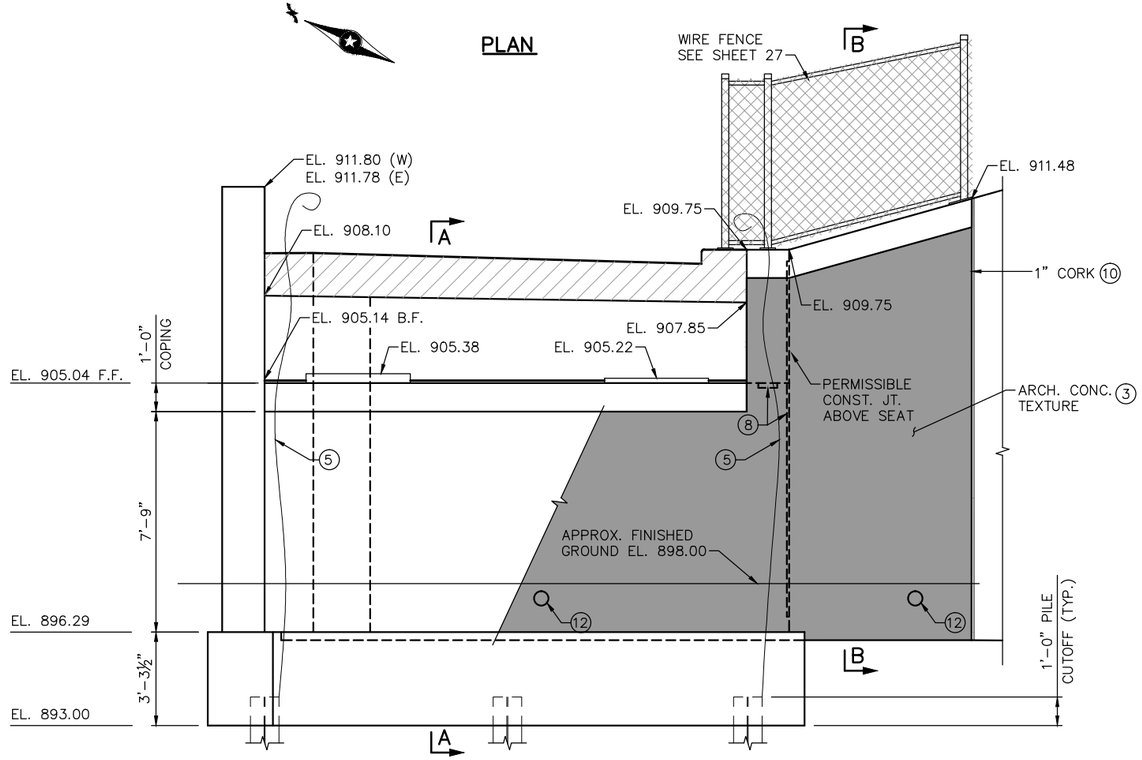

ELEVATION

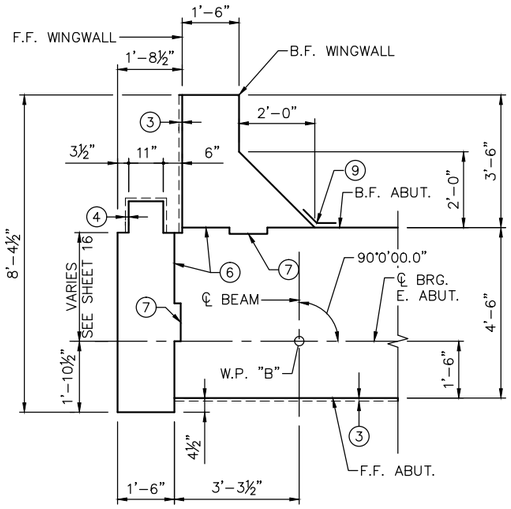

NORTHEAST WINGWALL PLAN

(SECTION BELOW ABUTMENT COPING)

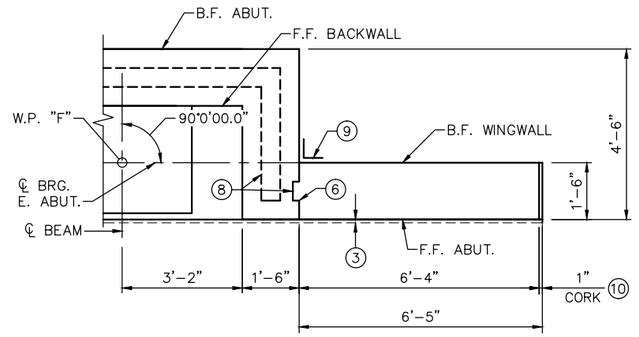

SOUTHEAST WINGWALL PLAN

(SECTION BELOW PAVING BLOCK)

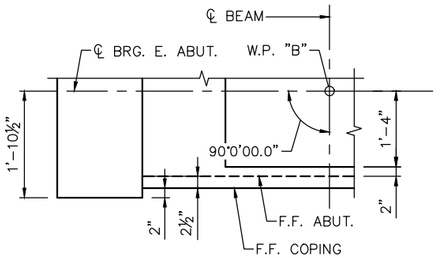

DETAIL "A"

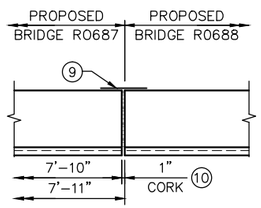

DETAIL "B"

NOTES:

SEE SHEET 15 FOR SECTIONS A–A & B–B.

SEE SHEET 26 FOR CORNER DETAILS.

PAVING BLOCK HATCHED AREA INDICATES THAT PORTION TO BE PLACED WITH THE SUPERSTRUCTURE CONCRETE.

(1) DIMENSION AT TOP OF FOOTING.

(2) DIMENSION AT TOP OF PILASTER.

(3) ARCHITECTURAL CONCRETE TEXTURE (STRIATED RELIEF) WITH ARCHITECTURAL SURFACE FINISH (SINGLE COLOR). THE APPROXIMATE THICKNESS OF ARCHITECTURAL CONCRETE IS 0.35".

(4) ARCHITECTURAL CONCRETE TEXTURE (LIMESTONE) WITH ARCHITECTURAL SURFACE FINISH (SINGLE COLOR). THE APPROXIMATE THICKNESS OF ARCHITECTURAL CONCRETE IS 0.50".

(5) ATTACH WIRE FENCE ANCHORAGE TO PILE WITH SOLID NO. 6 GAGE COPPER WIRE WITH AN APPROVED TYPE CLAMP OR BRAZING (ONE ANCHORAGE PER END OF RAIL). GROUND BOTH SIDES OF EXPANSION JOINT PIPE SLEEVE IF PRESENT. PAINT EXPOSED PORTION OF WIRE GRAY.

(6) CONSTRUCTION JOINT. 72 HOUR TIME DELAY REQUIRED BETWEEN ADJACENT POURS TO ALLOW FOR SHRINKAGE.

(7) 2" X 12" KEYWAY

(8) 2" X 6" KEYWAY

(9) MEMBRANE WATERPROOFING SYSTEM PER SPEC. 2481.3.B.

(10) ELECTRICAL INSULATING CORK BARRIER. CONTRACTOR AND FIELD ENGINEER SHALL VERIFY WINGWALL CONCRETE IS SEPARATED AND CONDUCTIVE MATERIAL DOES NOT EXTEND THROUGH CORK.

(11) 4" DIA. PERFORATED DRAIN PIPE. SEE DETAIL B910.

(12) 6" DIA. PIPE SLEEVE FOR DRAIN PIPE. SEE DETAIL B910, SHEET 37. INVERT SLEEVE AT FRONT FACE OF ABUTMENT, EL. 897.22 WITH A MINIMUM SLOPE UP OF ⅛"/FT TO BACKFACE.

NO.	DATE	BY	CHECK	DESIGN	REVISION / SUBMITTAL

DESIGNED BY: BAW | CHECKED BY: BLF
DRAWN BY: NAO | CHECKED BY: BLF

AECOM Kimley»Horn

90% SUBMISSION - 01/22/16

METROPOLITAN COUNCIL

SOUTHWEST Green Line LRT Extension

CIVIL - VOLUME 4D
MINNEHAHA CREEK TRAIL BRIDGE
BRIDGE R0687
EAST ABUTMENT DETAILS 2

DISCIPLINE: STRUCTURES
SHEET NAME: CBRR0687-BRG-ABT-002-2

SHEET 14 OF 46

Dec, 10 2015 08:10 am V:\3400_ADC\CAD\SEGMENT E2\PLAN SHEETS\STRUCTURES\MNHA-TRL\CBRR0687-BRG-ABT-002.dwg By: brian.fleming

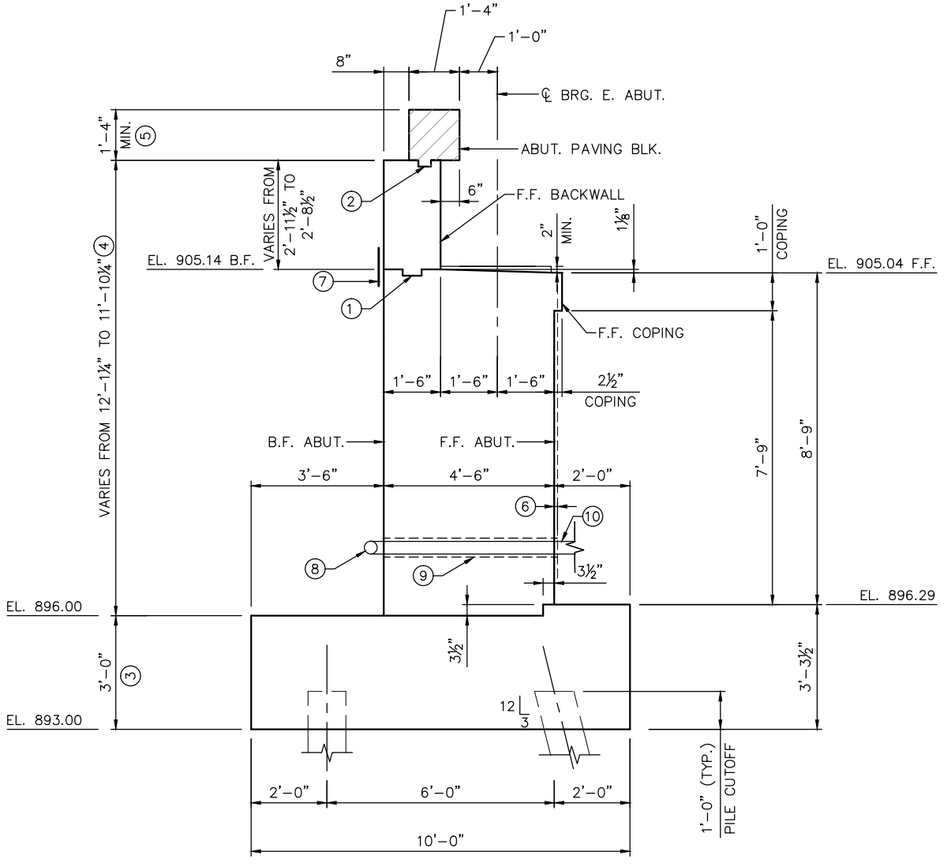

SECTION A–A

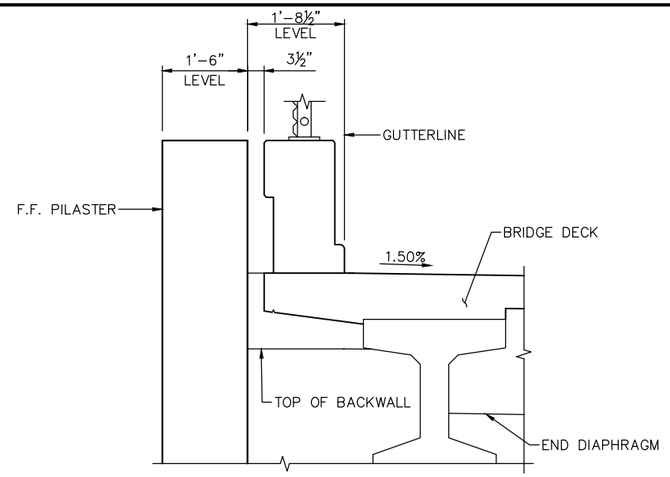

NORTHEAST CORNER ELEVATION

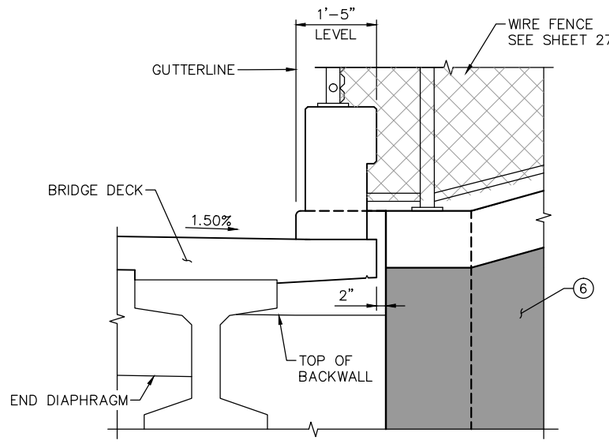

SOUTHEAST CORNER ELEVATION

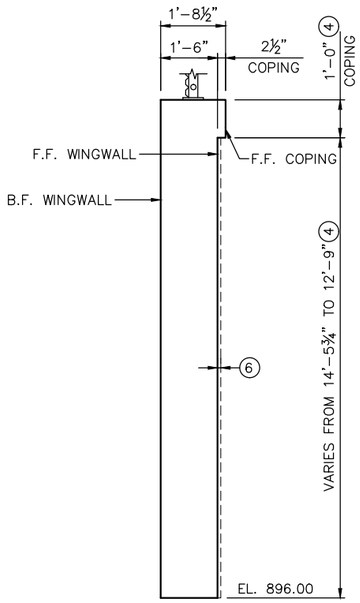

SECTION B–B

NOTES:

SEE SHEET 14 FOR LOCATIONS OF SECTIONS A–A, & B–B.

PAVING BLOCK HATCHED AREA INDICATES THAT PORTION TO BE PLACED WITH THE SUPERSTRUCTURE CONCRETE.

1. PERMISSIBLE CONSTRUCTION JOINT WITH 2" x 6" KEY CENTERED IN WALL.
2. CONSTRUCTION JOINT WITH 2" x 4" KEY.
3. STRUCTURAL CONCRETE (1G52).
4. STRUCTURAL CONCRETE (3B52).
5. BRIDGE SLAB CONCRETE (3YHPC–M). SEE SUPERSTRUCTURE DETAILS.
6. ARCHITECTURAL CONCRETE TEXTURE (STRIATED RELIEF) WITH ARCHITECTURAL SURFACE FINISH (SINGLE COLOR). THE APPROXIMATE THICKNESS OF ARCHITECTURAL CONCRETE IS 0.35".
7. MEMBRANE WATERPROOFING SYSTEM PER SPEC. 2481.3.B.
8. 4" DIA. PERFORATED DRAIN PIPE. SEE DETAIL B910, SEE SHEET 37.
9. 6" DIA. PIPE SLEEVE FOR DRAIN PIPE. SEE DETAIL B910, SHEET 37. INVERT SLEEVE AT FRONT FACE OF ABUTMENT, EL. 897.22 WITH A MINIMUM SLOPE UP OF ⅛"/FT TO BACKFACE.
10. 4" DIA. NON–PERFORATED DRAIN PIPE TO CONCRETE HEADWALL. SEE DETAIL B910, SEE SHEET 37.

NO.	DATE	BY	CHECK	DESIGN	REVISION / SUBMITTAL

DESIGNED BY: BAW CHECKED BY: BLF
DRAWN BY: NAO CHECKED BY: BLF

AECOM Kimley»Horn

90% SUBMISSION - 01/22/16

METROPOLITAN COUNCIL

SOUTHWEST Green Line LRT Extension

CIVIL - VOLUME 4D
MINNEHAHA CREEK TRAIL BRIDGE
BRIDGE R0687
EAST ABUTMENT DETAILS 3

DISCIPLINE: STRUCTURES
SHEET NAME: CBRR0687-BRG-ABT-002-3

SHEET 15 OF 46

Dec, 10 2015 08:10 am V:\3400_ADC\CAD\SEGMENT E2\PLAN SHEETS\STRUCTURES\MNHA-TRL\CBRR0687-BRG-ABT-002.dwg By: brian.fleming

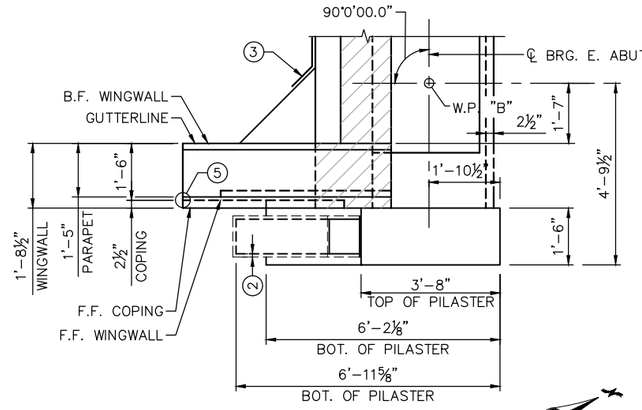

NORTHEAST WINGWALL PLAN

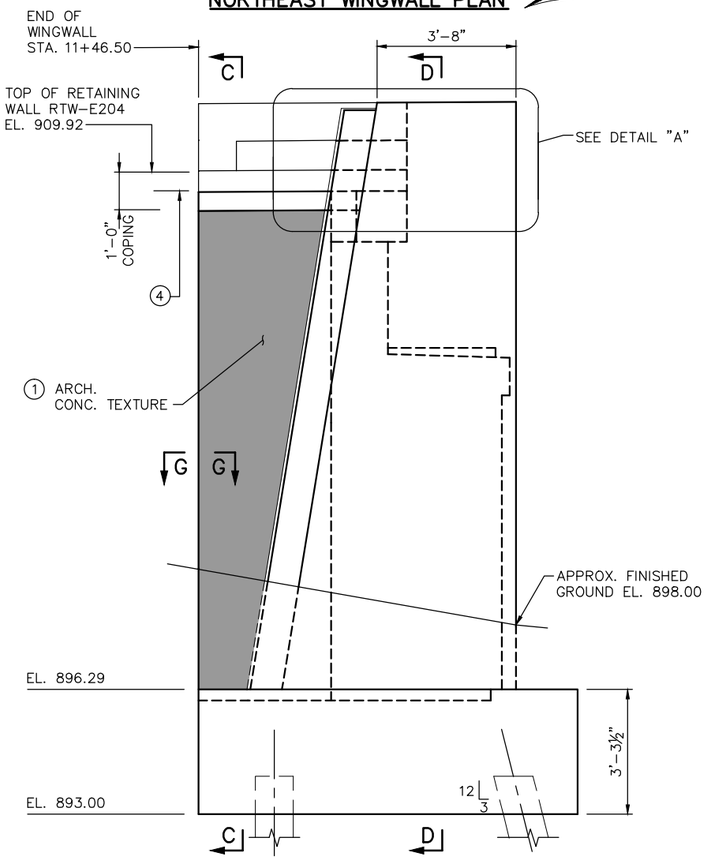

NORTHEAST WINGWALL ELEVATION

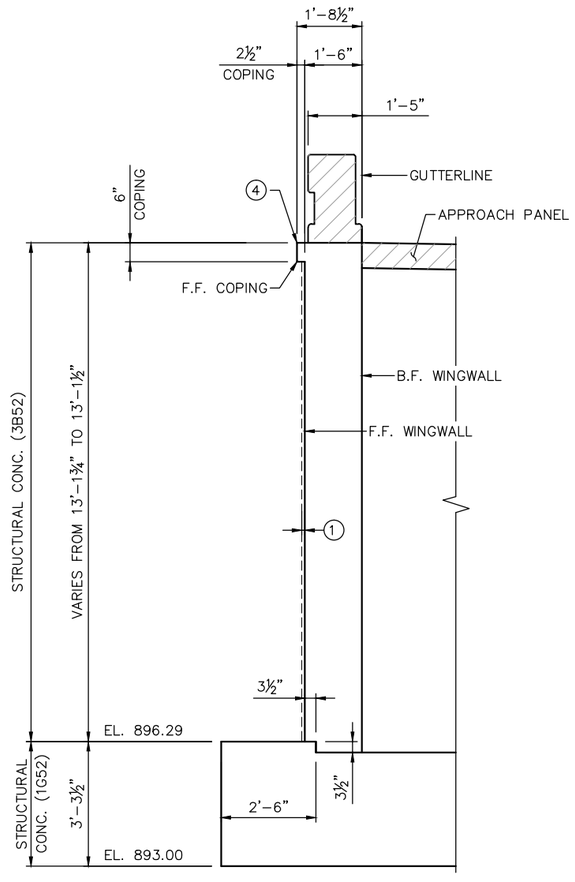

SECTION C-C

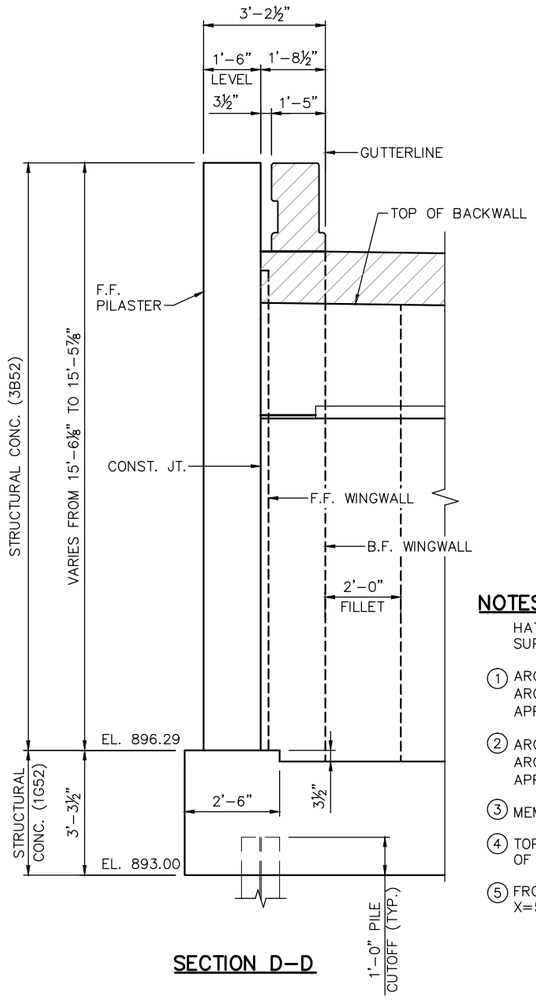

SECTION D-D

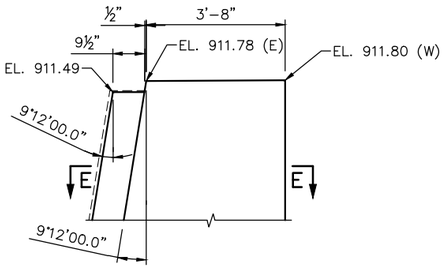

DETAIL "A"

(NORTH PILASTER FACE SHOWN)

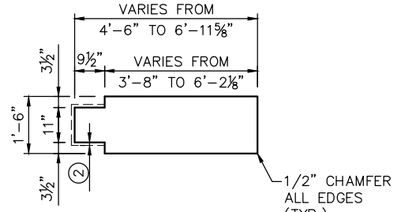

SECTION E-E

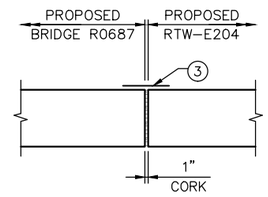

SECTION G-G

NOTES:

HATCHED AREA INDICATES THAT PORTION TO BE PLACED WITH THE SUPERSTRUCTURE CONCRETE.

1. ARCHITECTURAL CONCRETE TEXTURE (STRIATED RELIEF) WITH ARCHITECTURAL SURFACE FINISH (SINGLE COLOR). THE APPROXIMATE THICKNESS OF ARCHITECTURAL CONCRETE IS 0.35".
2. ARCHITECTURAL CONCRETE TEXTURE (LIMESTONE) WITH ARCHITECTURAL SURFACE FINISH (SINGLE COLOR). THE APPROXIMATE THICKNESS OF ARCHITECTURAL CONCRETE IS 0.50".
3. MEMBRANE WATERPROOFING SYSTEM PER SPEC. 2481.3.B.
4. TOP OF WINGWALL EL. 909.44 AT BACKFACE OF ABUTMENT. TOP OF WINGWALL EL. 909.42 AT END OF WINGWALL, EAST END.
5. FRONT FACE OF WINGWALL AT RTW-E204 INTERFACE. X=501371.435 ; Y=150976.532.

NO.	DATE	BY	CHECK	DESIGN	REVISION / SUBMITTAL

DESIGNED BY: BAW | CHECKED BY: BLF
DRAWN BY: NAO | CHECKED BY: BLF

AECOM Kimley»Horn

90% SUBMISSION - 01/22/16

METROPOLITAN COUNCIL

SOUTHWEST Green Line LRT Extension

CIVIL - VOLUME 4D
MINNEHAHA CREEK TRAIL BRIDGE
BRIDGE R0687
EAST ABUTMENT DETAILS 4

DISCIPLINE: STRUCTURES
SHEET NAME: CBRR0687-BRG-ABT-002-4

SHEET 16 OF 46

Dec, 10 2015 08:10 am V:\3400_ADC\CAD\SEGMENT E2\PLAN SHEETS\STRUCTURES\MNHA-TRL\CBRR0687-BRG-ABT-002.dwg By: brian.fleming

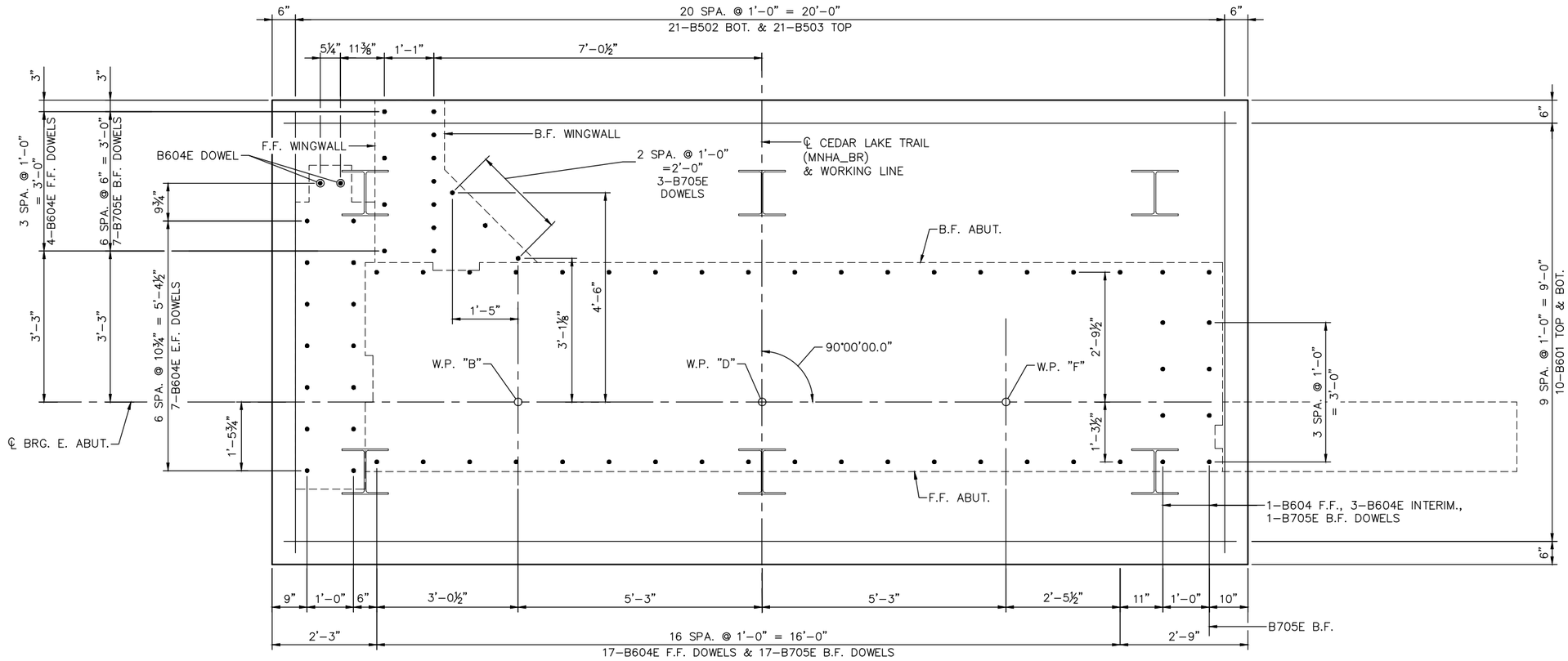

NORTH

SOUTH

FOOTING PLAN

NO.	DATE	BY	CHECK	DESIGN	REVISION / SUBMITTAL

DESIGNED BY: BAW CHECKED BY: BLF
DRAWN BY: NAO CHECKED BY: BLF

AECOM Kimley»Horn

90% SUBMISSION - 01/22/16

METROPOLITAN COUNCIL

SOUTHWEST Green Line LRT Extension

CIVIL - VOLUME 4D
MINNEHAHA CREEK TRAIL BRIDGE
BRIDGE R0687
EAST ABUTMENT REINFORCEMENT 1

DISCIPLINE: STRUCTURES
SHEET NAME: CBRR0687-BRG-ABT-002-5

SHEET 17 OF 46

Dec. 10 2015 08:30 am V:\3400_ADC\CAD\SEGMENT E2\PLAN SHEETS\STRUCTURES\MNHA-TRL\CBRR0687-BRG-ABT-002.dwg By: brian.fleming

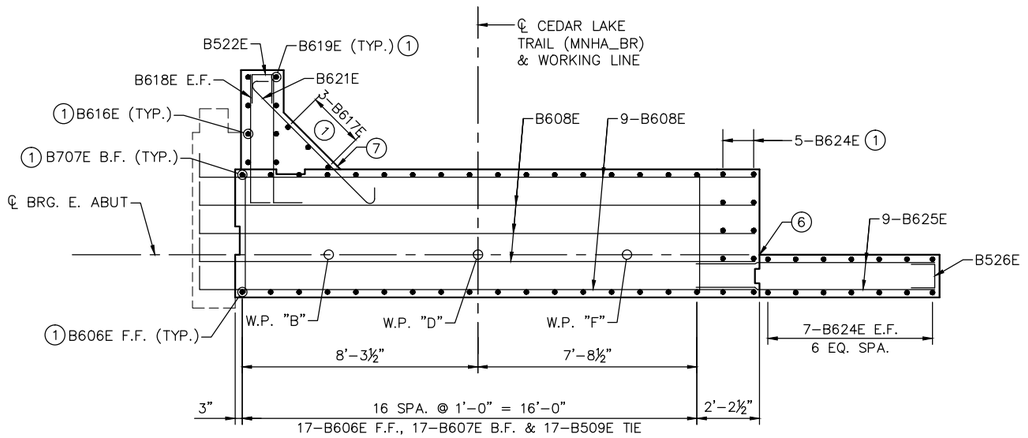

SECTION F-F

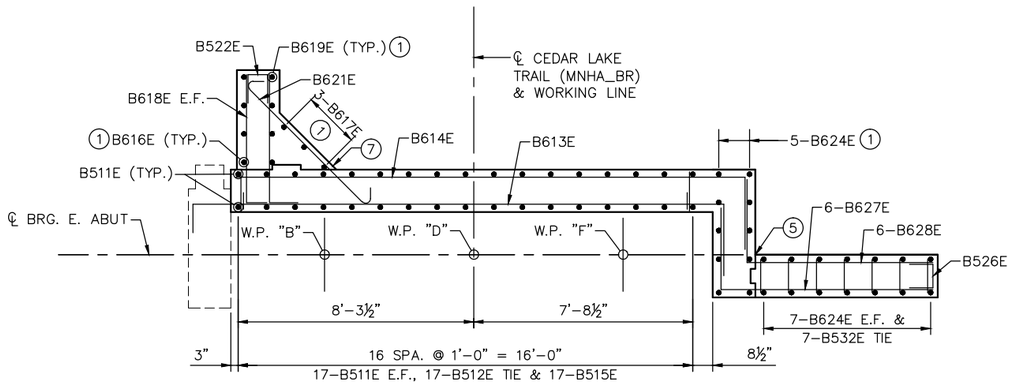

SECTION G-G

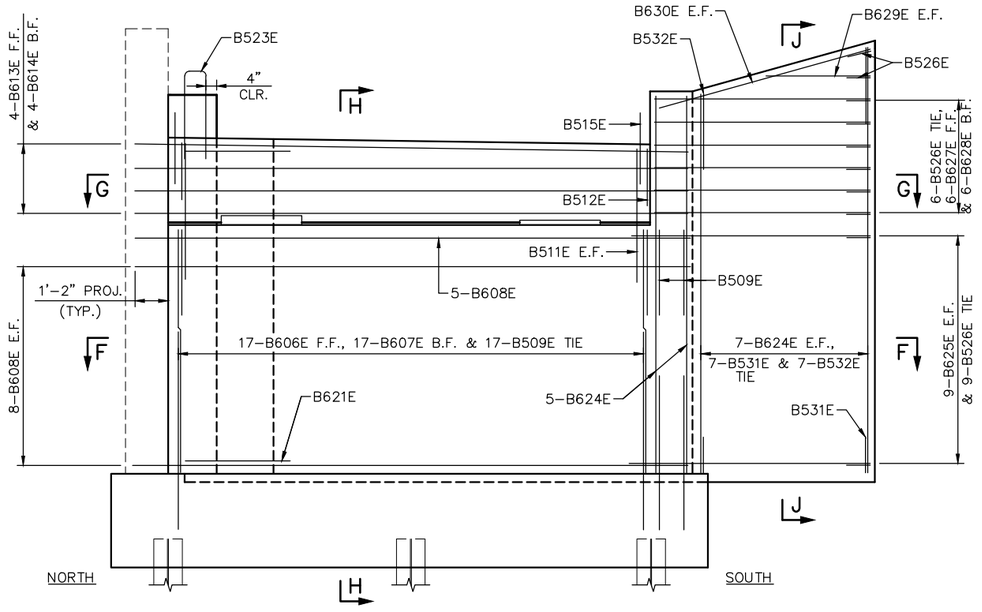

ELEVATION

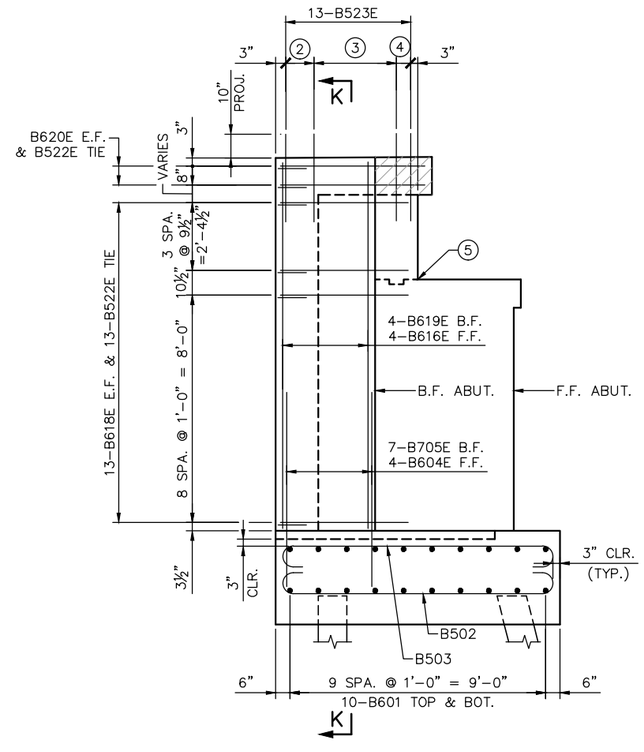

NORTHEAST WINGWALL ELEVATION

NOTES:

SEE SHEET 19 FOR SECTIONS H-H, J-J, & K-K.

1. SPACE WITH DOWEL BARS.
2. 2 SPA. @ 3" = 6"
3. 6 SPA. @ 6" = 3'-0"
4. 4 SPA. @ 3" = 1'-0"
5. PERMISSIBLE CONST. JT. WITH 2" x 6" KEYWAY.
6. CONST. JT. WITH 2" x 6" KEYWAY.
7. CONST. JT. WITH 2" x 12" KEYWAY.

NO.	DATE	BY	CHECK	DESIGN	REVISION / SUBMITTAL

DESIGNED BY: BAW CHECKED BY: BLF
DRAWN BY: NAO CHECKED BY: BLF

AECOM Kimley»Horn

90% SUBMISSION - 01/22/16

METROPOLITAN COUNCIL

SOUTHWEST Green Line LRT Extension

CIVIL - VOLUME 4D
MINNEHAHA CREEK TRAIL BRIDGE
BRIDGE R0687
EAST ABUTMENT REINFORCEMENT 2

DISCIPLINE: STRUCTURES
SHEET NAME: CBRR0687-BRG-ABT-002-6

SHEET 18 OF 46

Dec, 10 2015 08:10 am V:\3400_ADC\CAD\SEGMENT E2\PLAN SHEETS\STRUCTURES\MNHA-TRL\CBRR0687-BRG-ABT-002.dwg By: brian.fleming

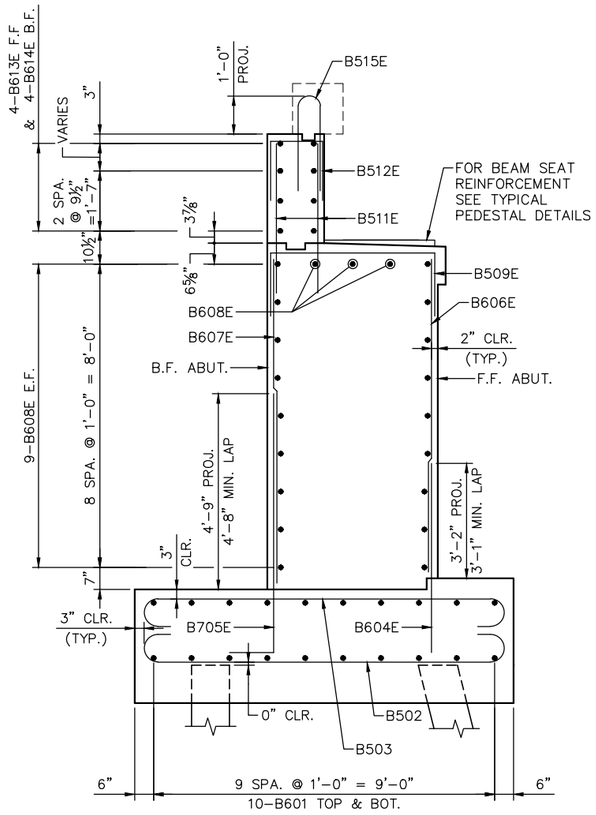

SECTION H-H

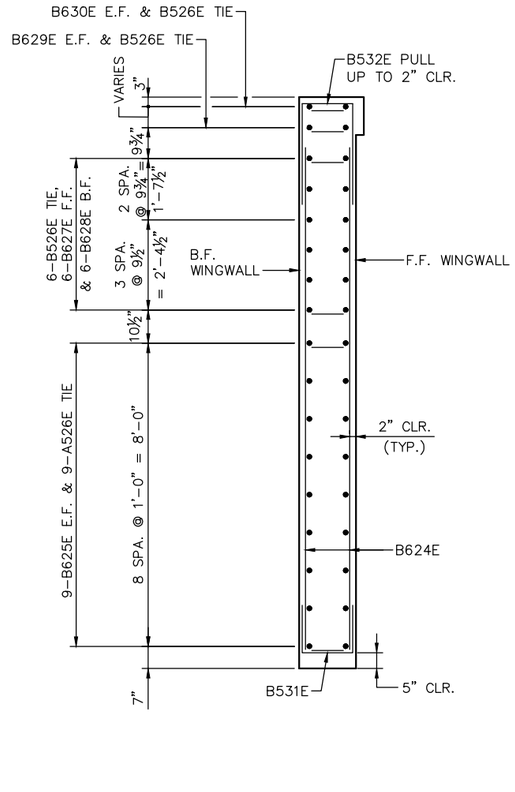

SECTION J-J

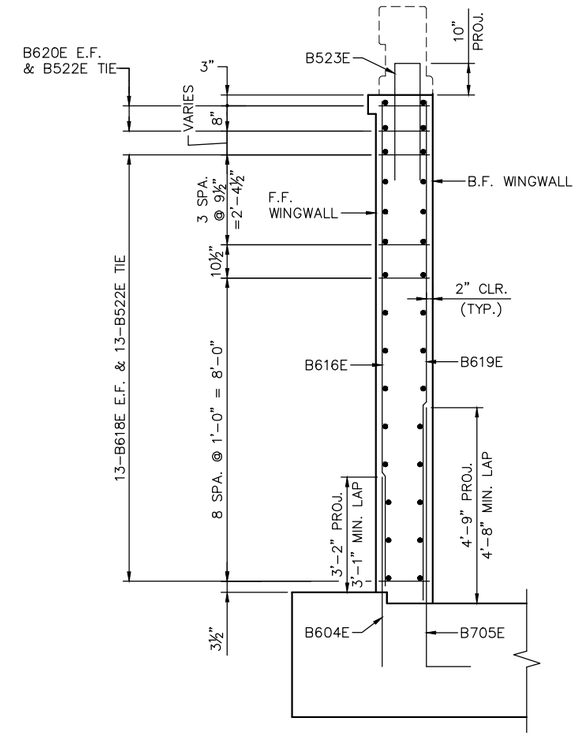

SECTION K-K

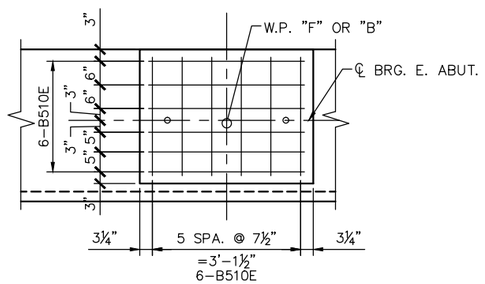

TYPICAL PEDESTAL PLAN

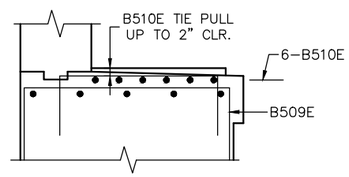

TYPICAL PEDESTAL SECTION

NOTES:

SEE SHEET 18 FOR LOCATIONS OF SECTIONS H-H, J-J, & K-K.

NO.	DATE	BY	CHECK	DESIGN	REVISION / SUBMITTAL

DESIGNED BY: BAW CHECKED BY: BLF
DRAWN BY: NAO CHECKED BY: BLF

AECOM Kimley»Horn

90% SUBMISSION - 01/22/16

METROPOLITAN COUNCIL

SOUTHWEST Green Line LRT Extension

CIVIL - VOLUME 4D
MINNEHAHA CREEK TRAIL BRIDGE
BRIDGE R0687
EAST ABUTMENT REINFORCEMENT 3

DISCIPLINE: STRUCTURES

SHEET NAME: CBRR0687-BRG-ABT-002-7

SHEET 19 OF 46

Dec, 10 2015 08:10 am v:\3400_ADC\CAD\SEGMENT E2\PLAN SHEETS\STRUCTURES\MNHA-TRL\CBRR0687-BRG-ABT-002.dwg By: brian.fleming

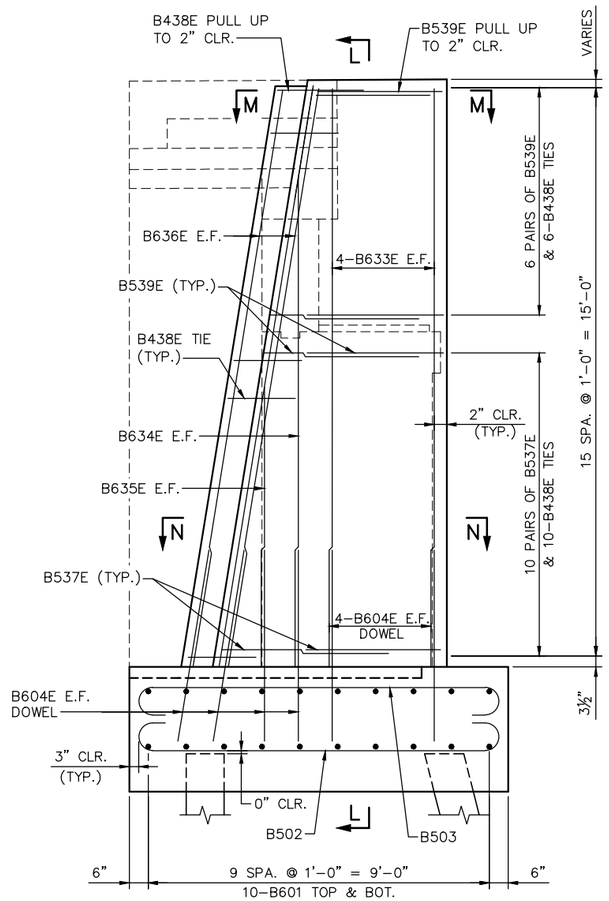

NORTHEAST PILASTER ELEVATION

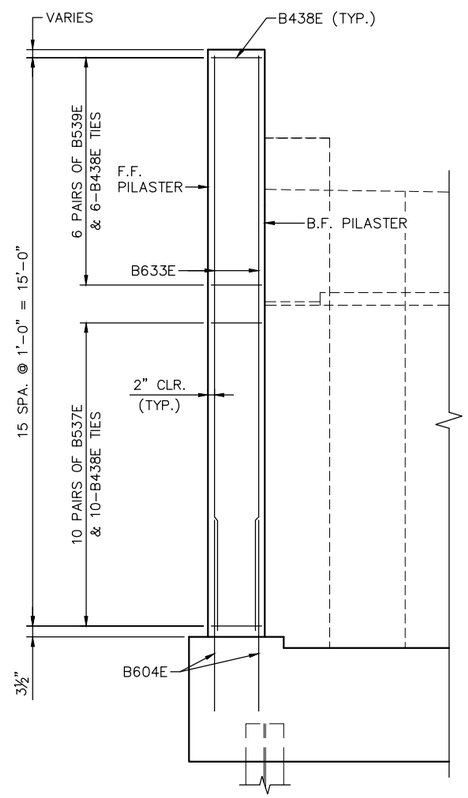

SECTION L–L

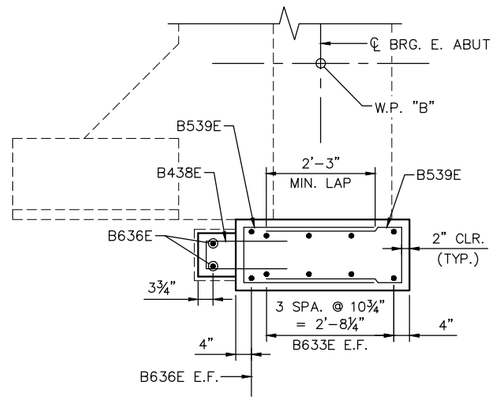

SECTION M–M

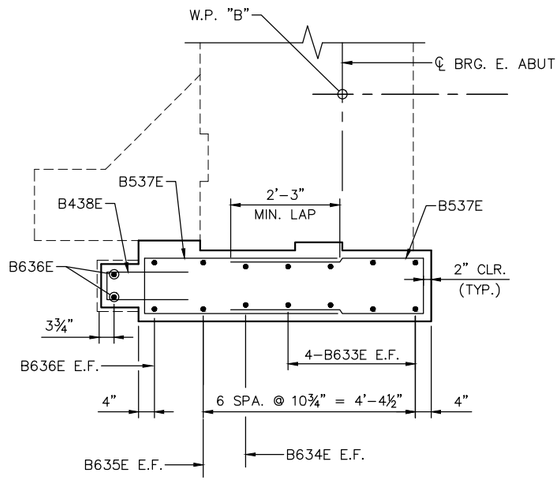

SECTION N–N

NO.	DATE	BY	CHECK	DESIGN	REVISION / SUBMITTAL

DESIGNED BY: BAW CHECKED BY: BLF
DRAWN BY: NAO CHECKED BY: BLF

AECOM Kimley»Horn

90% SUBMISSION - 01/22/16

METROPOLITAN COUNCIL

SOUTHWEST Green Line LRT Extension

CIVIL - VOLUME 4D
MINNEHAHA CREEK TRAIL BRIDGE
BRIDGE R0687
EAST ABUTMENT REINFORCEMENT 4

DISCIPLINE: STRUCTURES
SHEET NAME: CBRR0687-BRG-ABT-002-8

SHEET 20 OF 46

Dec, 10 2015 08:10 am V:\3400_ADC\CAD\SEGMENT E2\PLAN SHEETS\STRUCTURES\MNHA-TRL\CBRR0687-BRG-ABT-002.dwg By: brian.fleming

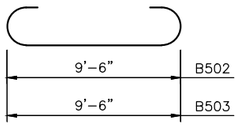

B502 & B503

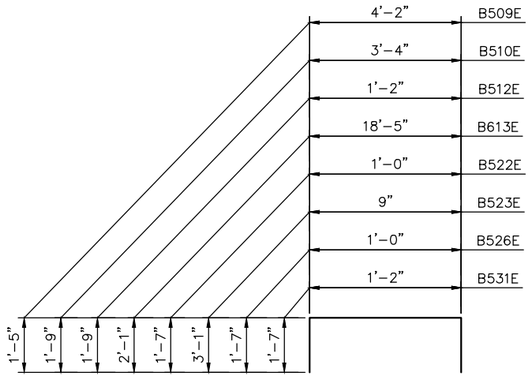

B509E, B510E, B512E, B613E, B522E, B523E, B526E, & B531E

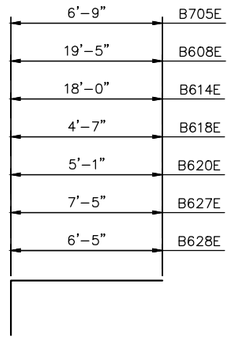

B705E, B608E, B614E, B618E, B620E, B627E, & B628E

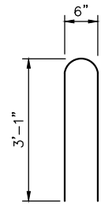

B515E

B621E

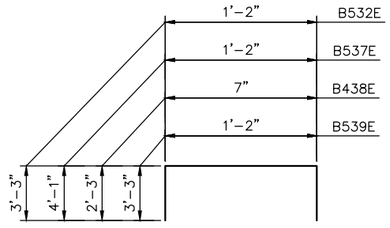

B532E, B537E, B438E, & B539E

BILL OF REINFORCEMENT FOR EAST ABUTMENT

BAR	NO.	LENGTH	SHAPE	LOCATION
B601	20	20'-6"	STR.	FOOTING, LONG. TOP & BOT.
B502	21	10'-8"	BENT	FOOTING, TRANS. BOT.
B503	21	10'-8"	BENT	FOOTING, TRANS. TOP
B604E	45	5'-7"	STR.	FOOTING, DOWEL
B605E	29	8'-1"	BENT	FOOTING, B.F. DOWEL
B606E	17	8'-5"	STR.	STEM, VERT. F.F.
B707E	17	8'-10"	STR.	STEM, VERT. B.F.
B608E	21	20'-5"	BENT	STEM, LONG.
B509E	19	7'-0"	BENT	STEM, TIE
B510E	24	6'-10"	BENT	PEDESTAL, TIE
B511E	34	5'-1"	STR.	BACKWALL, VERT. E.F.
B512E	17	4'-8"	BENT	BACKWALL, TIE
B613E	4	21'-6"	BENT	BACKWALL, HORZ. F.F.
B614E	4	20'-1"	BENT	BACKWALL, HORZ. B.F.
B515E	17	6'-8"	BENT	PAVING BLOCK, TIE
B616E	4	12'-10"	STR.	WINGWALL, VERT. F.F.
B617E	3	11'-10"	STR.	WINGWALL, VERT. B.F.
B618E	26	5'-7"	BENT	WINGWALL, HORZ. E.F.
B619E	4	13'-1"	STR.	WINGWALL, VERT. B.F.
B620E	4	6'-1"	BENT	WINGWALL, HORZ. E.F.
B621E	13	7'-10"	BENT	WINGWALL, HORZ. TIE
B522E	15	4'-2"	BENT	WINGWALL, HORZ. TIE
B523E	13	6'-11"	BENT	WINGWALL, VERT. TIE
B624E	24	13'-2"	STR.	WINGWALL, VERT. E.F.
B625E	18	9'-8"	STR.	WINGWALL, HORZ. E.F.
B526E	17	4'-2"	BENT	WINGWALL, TIE
B627E	6	10'-5"	BENT	WINGWALL, HORZ. TIE F.F.
B628E	6	9'-3"	BENT	WINGWALL, HORZ. TIE B.F.
B629E	2	3'-6"	STR.	WINGWALL, HORZ. E.F.
B630E	2	7'-8"	STR.	WINGWALL, HORZ. E.F.
B531E	7	4'-4"	BENT	WINGWALL, TIE
B532E	7	7'-8"	BENT	WINGWALL, TIE
B633E	8	15'-3"	STR.	PILASTER, VERT. E.F.
B634E	2	13'-7"	STR.	PILASTER, VERT. E.F.
B635E	2	8'-1"	STR.	PILASTER, VERT. E.F.
B636E	4	15'-2"	STR.	PILASTER, VERT. E.F.
B537E	20	9'-4"	BENT	PILASTER, TIE
B438E	16	5'-1"	BENT	PILASTER, TIE
B539E	12	7'-8"	BENT	PILASTER, TIE

Dec, 10 2015 08:32 am V:\3400_ADC\CAD\SEGMENT E2\PLAN SHEETS\STRUCTURES\MNHA-TRL\CBRR0687-BRG-ABT-002.dwg By: brian.fleming

NO.	DATE	BY	CHECK	DESIGN	REVISION / SUBMITTAL

DESIGNED BY: BAW CHECKED BY: BLF
DRAWN BY: NAO CHECKED BY: BLF

AECOM Kimley»Horn

90% SUBMISSION - 01/22/16

METROPOLITAN COUNCIL

SOUTHWEST Green Line LRT Extension

CIVIL - VOLUME 4D
MINNEHAHA CREEK TRAIL BRIDGE
BRIDGE R0687
EAST ABUTMENT REINFORCEMENT 5

DISCIPLINE: STRUCTURES
SHEET NAME: CBRR0687-BRG-ABT-002-9

SHEET 21 OF 46

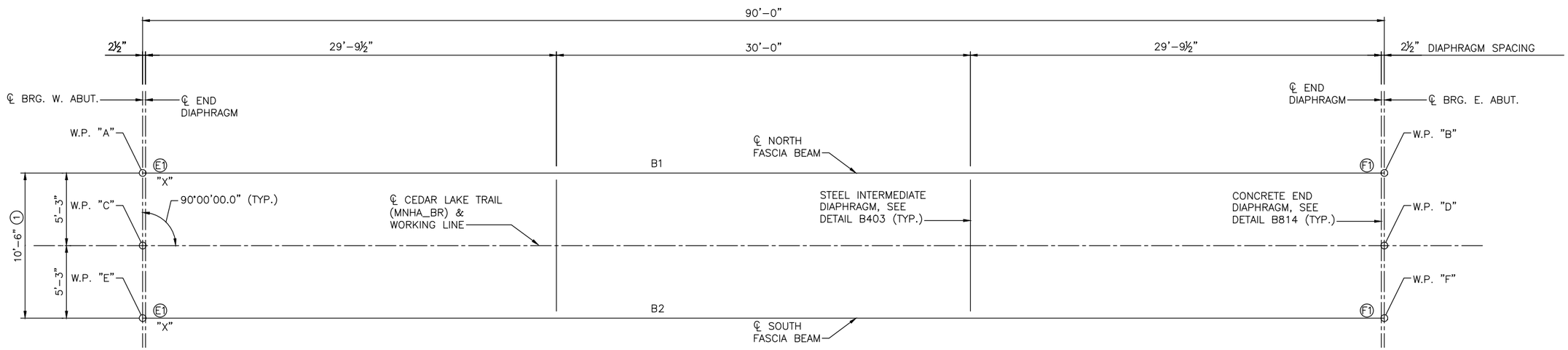

FRAMING PLAN

NOTES:

ALL BEAMS SET PARALLEL TO WORKING LINE, ALL DIAPHRAGMS SET PARALLEL TO SUBSTRUCTURES.

"X" INDICATES END OF BEAM.

(F1) DENOTES FIXED CURVED PLATE BEARING ASSEMBLY, TYPE F1. SEE DETAIL B310.

(E1) DENOTES EXPANSION CURVED PLATE BEARING ASSEMBLY, TYPE E1. SEE DETAIL B311.

(1) 36M PRESTRESSED CONCRETE BEAMS.

NO.	DATE	BY	CHECK	DESIGN	REVISION / SUBMITTAL

DESIGNED BY: BAW CHECKED BY: BLF
DRAWN BY: NAO CHECKED BY: BLF

AECOM Kimley»Horn

90% SUBMISSION - 01/22/16

METROPOLITAN COUNCIL

SOUTHWEST Green Line LRT Extension

CIVIL - VOLUME 4D
MINNEHAHA CREEK TRAIL BRIDGE
BRIDGE R0687
FRAMING PLAN

DISCIPLINE: STRUCTURES
SHEET NAME: CBRR0687-BRG-SUP-002

SHEET 22 OF 46

Dec, 10 2015 08:11 am v:\3400_ADC\CAD\SEGMENT E2\PLAN SHEETS\STRUCTURES\MNHA-TRL\CBRR0687-BRG-SUP-002.dwg By: brian.fleming

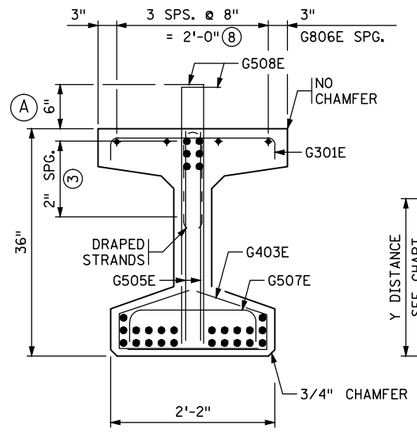

END VIEW

CUT STRANDS FLUSH WITH CONCRETE.
COVER ENDS WITH ONE COMPONENT POLYURETHANE SEALANT PER APPROVED PRODUCT LIST.

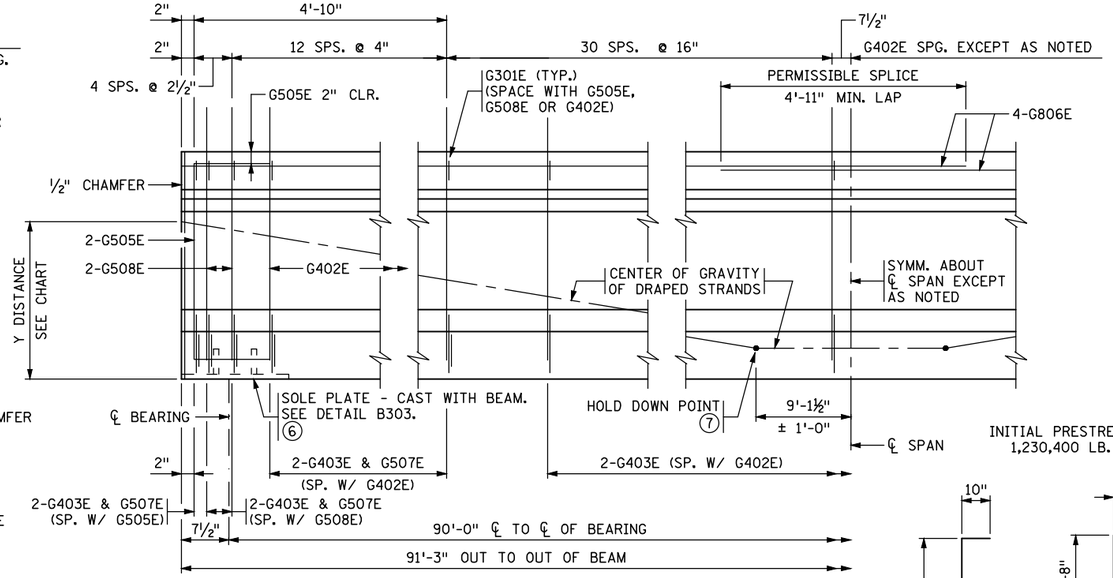

BEAM ELEVATION

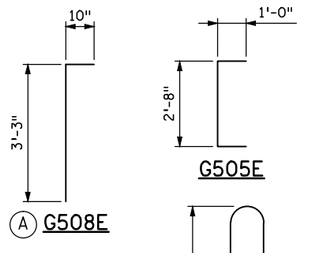

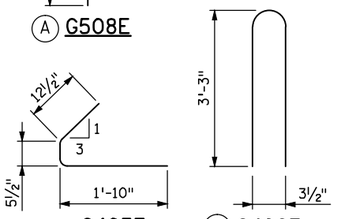

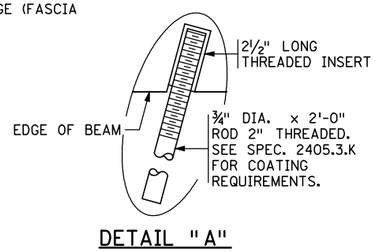

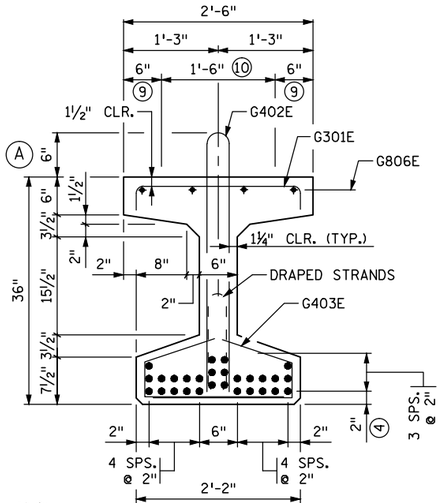

SECTION AT ℄ SPAN

SHEET MODIFICATION:
(A) DENOTES MODIFICATION TO STANDARD SHEET

Y DISTANCES (INCHES)			
	NO.	℄ SPAN	END
STRAIGHT STRANDS	22	3.27	
DRAPED STRANDS	6	5.00	31.00 ▫
TOTAL STRANDS	28	3.64	

Y = DISTANCE TO CENTER OF GRAVITY OF STRANDS FROM BOTTOM OF BEAM. ALL STRANDS SPACED 2" CENTER TO CENTER, HORIZONTALLY AND VERTICALLY, EXCEPT AS NOTED.

▫ A TOLERANCE OF ± 1" WILL BE PERMITTED IN THIS DIMENSION.

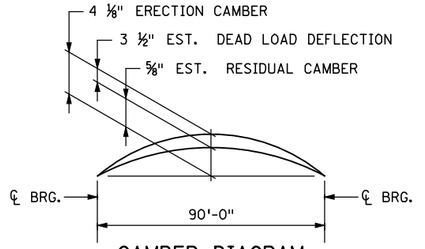

CAMBER DIAGRAM

ERECTION CAMBER SHOWN IS AFTER DIAPHRAGMS ARE IN PLACE.

DEAD LOAD DEFLECTION SHOWN IS FOR WEIGHT OF SLAB, WEARING COURSE, BARRIER, SIDEWALK AND MEDIAN WHERE APPLICABLE.

CONTRACTOR WILL TAKE ELEVATIONS AT TOP OF BEAMS AFTER ERECTION AND WILL ALLOW FOR DEFLECTION SHOWN TO ENABLE BUILDING FORMS TO CORRECT GRADE AND SPECIFIED SLAB THICKNESS. PROVIDE COPY OF ELEVATIONS TO THE ENGINEER.

GENERAL NOTES

PROVIDE HANDLING HOOKS OR DEVICES AS REQUIRED BY CONTRACTOR.

MARK EACH BEAM SHOWING BRIDGE NUMBER, CASTING DATE, AND INDIVIDUAL IDENTIFICATION LETTERS AND NUMBERS ON THE FACE OF THE BEAM, NEAR THE END, SO LOCATED THAT THEY WILL BE EXPOSED AFTER THE END DIAPHRAGMS HAVE BEEN CAST. MARK FASCIA BEAMS ON THE INSIDE FACE. ENSURE ALL MARKINGS ARE STENCILED AND CLEARLY LEGIBLE. FOR LOCATION OF BEAMS, SEE FRAMING PLAN.

~~ALL MATERIAL AND WORK SHOWN OR NOTED ON THIS SHEET IS INCLUDED IN UNIT PRICE BID FOR PRESTRESSED CONCRETE BEAMS. SEE SPEC. 2405.~~

SEE FRAMING PLAN FOR BEAM END MARKED "X" AND DIAPHRAGM SPACING.

APPROXIMATE WEIGHT OF BEAM IS 28.0 TONS.

AS AN ALTERNATE TO THE END DIAPHRAGM ANCHORAGES SHOWN, THE CONTRACTOR MAY SUBMIT DETAILS OF A CAST-IN-PLACE ANCHORAGE TO THE ENGINEER FOR APPROVAL. ANCHORAGE MUST PROVIDE AN ULTIMATE PULL OUT STRENGTH OF 15 KIPS PER ANCHORAGE.

APPLY AN APPROVED SEALER TO THE SIDES OF THE BEAM NEAR EACH END PER THE SPECIAL PROVISIONS.

(1) MINIMUM CONCRETE STRENGTH AT TIME OF PRESTRESS TRANSFER.

(2) MINIMUM CONCRETE STRENGTH WHEN BEAM CAN BE TRANSPORTED AND INSTALLED.

(3) DRAPED STRANDS.

(4) STRAIGHT STRANDS.

(5) USE 7-WIRE LOW RELAXATION PRESTRESSING STRAND, CONFORMING TO ASTM A416, GRADE 270.

(6) ~~FOR INTEGRAL ABUTMENT, SOLE PLATE CAN BE ELIMINATED OR REPLACED WITH AN APPROVED PROTECTION PLATE. BEAMS DETAILED TO INCLUDE A TAPERED PLATE PER STANDARD FIGURE B309 MUST INCLUDE SOLE PLATE.~~

(7) CENTER OF GRAVITY OF HOLD DOWNS WHEN MULTIPLE HOLD DOWNS ARE USED.

(8) TWO INSIDE BARS MAY BE PLACED ADJACENT TO VERTICAL STIRRUP FOR TYING CONVENIENCE.

(9) STEEL TROWEL TO SMOOTH FINISH AND APPLY BOND BREAKER PER APPROVED PRODUCTS LIST.

(10) ROUGH FLOAT AND BROOM TRANSVERSELY FOR BOND PER SPEC. 2405.3.D.

CALCULATED PRESTRESS LOSSES	
ELASTIC SHORTENING LOSS	20.85 KSI
LONG TERM LOSSES	22.76 KSI
TOTAL LOSSES	43.62 KSI

MINIMUM CONCRETE STRENGTH - K.S.I.	
(1) f'cI	(2) f'c
7.0 KSI	8.0 KSI

PRESTRESSING STRAND DIAMETER	
(5)	½" ☐
(5)	0.60" ☒

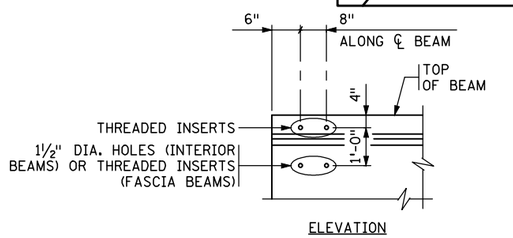

CONCRETE END DIAPHRAGM

PARAPET ABUTMENT
(SEE DETAIL B814 FOR DIAPHRAGM DETAILS)

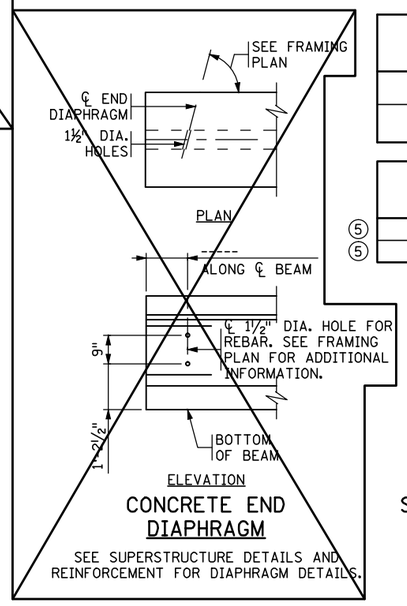

CONCRETE END DIAPHRAGM

SEE SUPERSTRUCTURE DETAILS AND REINFORCEMENT FOR DIAPHRAGM DETAILS.

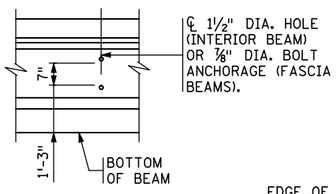

STEEL INTERMEDIATE DIAPHRAGM

(SEE DETAIL B403 FOR DIAPHRAGM DETAILS)

REVISION:

APPROVED: JANUARY 13, 2015
Nancy Daubenberger
STATE BRIDGE ENGINEER

CERTIFIED BY _____ LICENSED PROFESSIONAL ENGINEER _____ DATE
NAME: LIC. NO.

TITLE: 36" PRESTRESSED CONCRETE BEAM DETAILS (PRETENSIONED) 36M-92

BEAMS B1 & B2

DES: BAW	DR: NAO	APPROVED:
CHK: BLF	CHK: BLF	

SHEET NO. 23 OF 46 SHEETS

FIG. 5-397.505 (MOD.)

BRIDGE NO. R0687

Dec. 10 2015 08:11 am V:\3400_ADC\CAD\SEGMENT E2\PLAN SHEETS\STRUCTURES\MNHA-TRL\CBRR0687-BRG-PCB-001.dwg By: brian.fleming

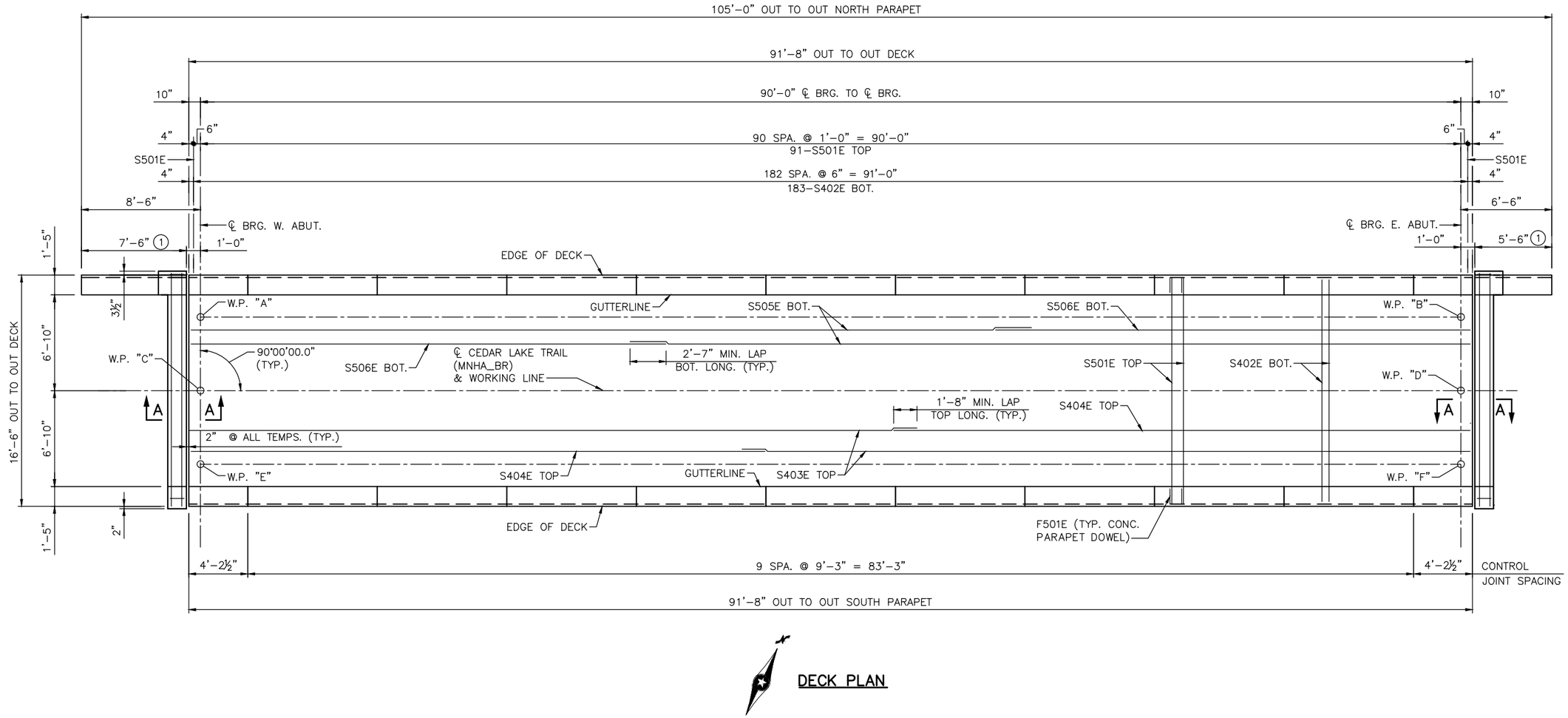

DECK PLAN

NOTES:

SEE SHEET 31 FOR APPROACH PANEL REINFORCEMENT.

SEE SHEET 25 FOR TRANSVERSE SECTION THRU DECK & SECTION A–A.

(1) CONCRETE PARAPET (TYPE P–1) IS LOCATED ON PAVING BLOCK AND WINGWALL.

NO.	DATE	BY	CHECK	DESIGN	REVISION / SUBMITTAL

DESIGNED BY: BAW | CHECKED BY: BLF
DRAWN BY: NAO | CHECKED BY: BLF

AECOM Kimley»Horn

90% SUBMISSION - 01/22/16

METROPOLITAN COUNCIL

SOUTHWEST Green Line LRT Extension

CIVIL - VOLUME 4D
MINNEHAHA CREEK TRAIL BRIDGE
BRIDGE R0687
SUPERSTRUCTURE DETAILS 1

DISCIPLINE: STRUCTURES
SHEET NAME: CBRR0687-BRG-SUP-003-1

SHEET 24 OF 46

Dec, 10 2015 08:11 am v:\3400_ADC\CAD\SEGMENT E2\PLAN SHEETS\STRUCTURES\MNHA-TRL\CBRR0687-BRG-SUP-003.dwg By: brian.fleming

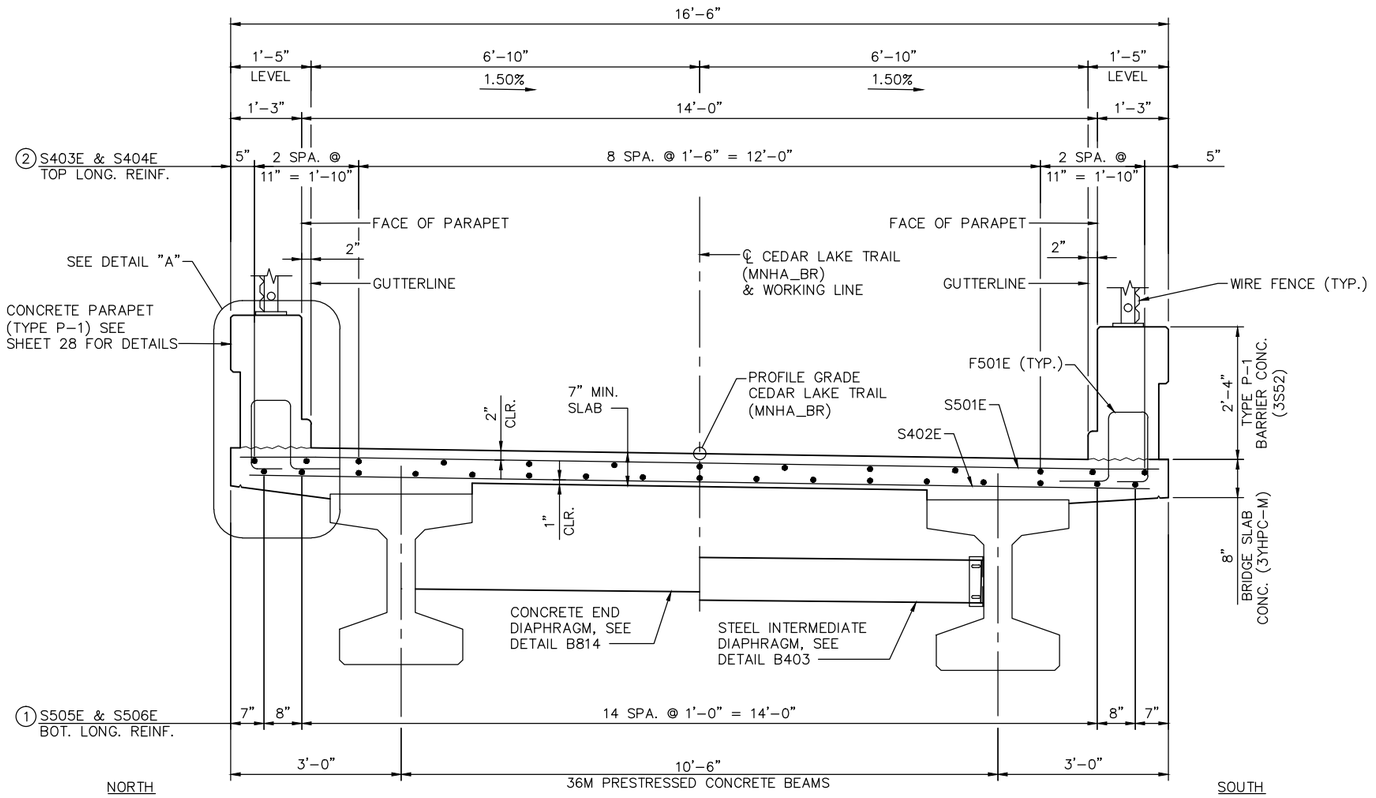

TRANSVERSE SECTION

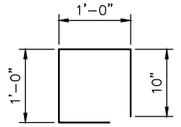

S407E

BILL OF REINFORCEMENT FOR SUPERSTRUCTURE				
BAR	NO.	LENGTH	SHAPE	LOCATION
S501E	93	16'-2"	STR.	TRANSVERSE, TOP
S402E	183	15'-10"	STR.	TRANSVERSE, BOT.
S403E	13	52'-0"	STR.	LONGITUDINAL, TOP
S404E	13	41'-0"	STR.	LONGITUDINAL, TOP
S505E	17	60'-0"	STR.	LONGITUDINAL, BOT.
S506E	17	33'-11"	STR.	LONGITUDINAL, BOT.
S407E	34	3'-8"	BENT	PAVING BLOCK, TIE
S508E	8	16'-7"	STR.	PAVING BLOCK, TOP & BOT.

NOTES:

SEE SHEET 24 FOR LOCATION OF SECTION A–A.

① 17 TOTAL LINES BOT. LONG. (S505E W/S506E ALT. ENDS PER LINE)

② 13 TOTAL LINES TOP LONG. (S403E W/ S404E ALT. ENDS PER LINE)

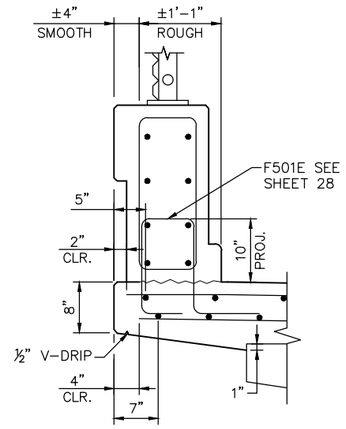

DETAIL "A"

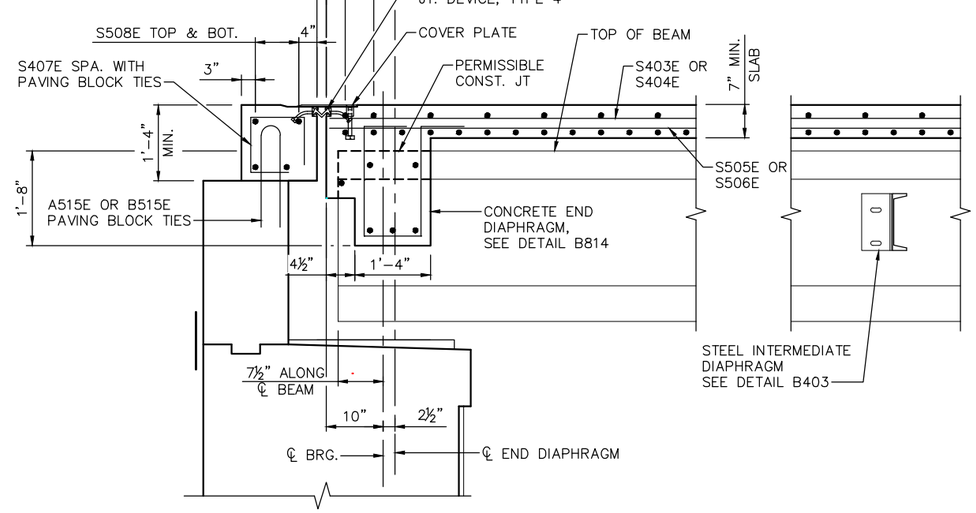

SECTION A–A

NO.	DATE	BY	CHECK	DESIGN	REVISION / SUBMITTAL

DESIGNED BY: BAW CHECKED BY: BLF
DRAWN BY: NAO CHECKED BY: BLF

AECOM Kimley»Horn

90% SUBMISSION - 01/22/16

METROPOLITAN COUNCIL

SOUTHWEST Green Line LRT Extension

CIVIL - VOLUME 4D
MINNEHAHA CREEK TRAIL BRIDGE
BRIDGE R0687
SUPERSTRUCTURE DETAILS 2

DISCIPLINE: STRUCTURES
SHEET NAME: CBRR0687-BRG-SUP-003-2

SHEET 25 OF 46

Dec, 10 2015 08:12 am v:\3400_ADC\CAD\SEGMENT E2\PLAN SHEETS\STRUCTURES\MINHA-TRL\CBRR0687-BRG-SUP-003.dwg By: brian.fleming

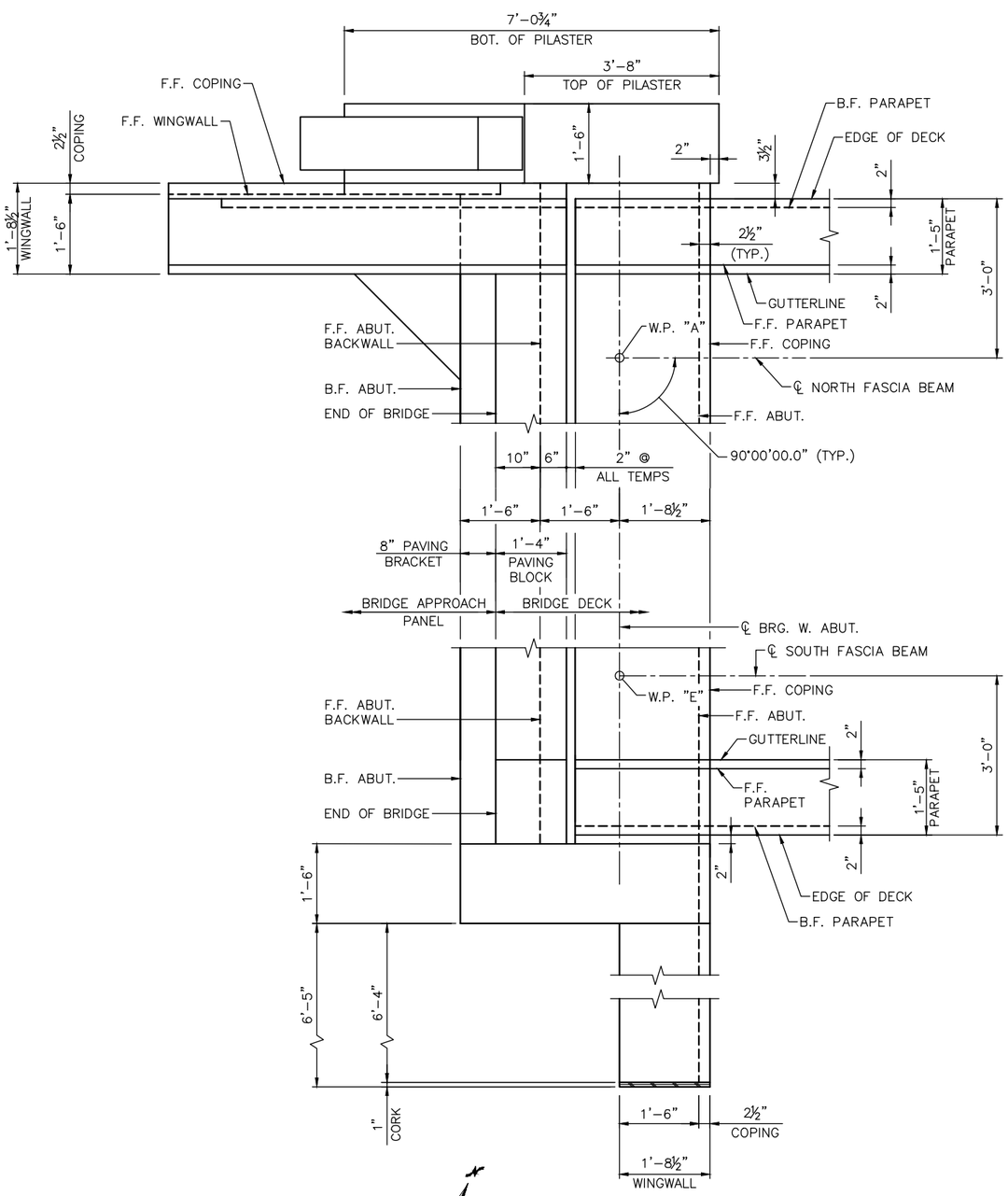

WEST ABUTMENT CORNER DETAILS

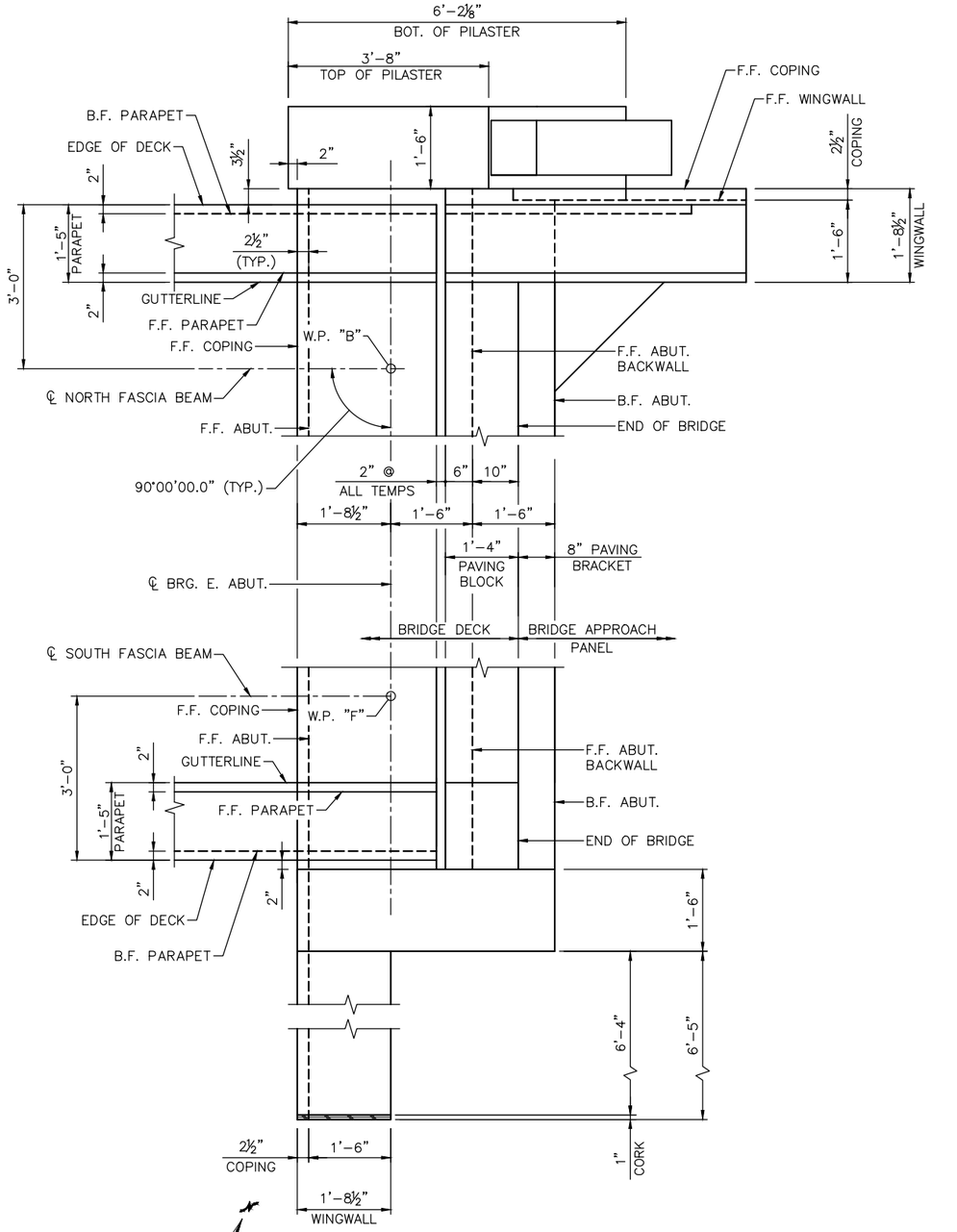

EAST ABUTMENT CORNER DETAILS

NO.	DATE	BY	CHECK	DESIGN	REVISION / SUBMITTAL

DESIGNED BY: BAW | CHECKED BY: BLF
DRAWN BY: NAO | CHECKED BY: BLF

AECOM Kimley»Horn

90% SUBMISSION - 01/22/16

METROPOLITAN COUNCIL

SOUTHWEST Green Line LRT Extension

CIVIL - VOLUME 4D
MINNEHAHA CREEK TRAIL BRIDGE
BRIDGE R0687
SUPERSTRUCTURE DETAILS 3

DISCIPLINE: STRUCTURES

SHEET NAME: CBRR0687-BRG-SUP-003-3

SHEET 26 OF 46

Dec, 10 2015 08:12 am V:\3400_ADC\CAD\SEGMENT E2\PLAN SHEETS\STRUCTURES\MNHA-TRL\CBRR0687-BRG-SUP-003.dwg By: brian.fleming

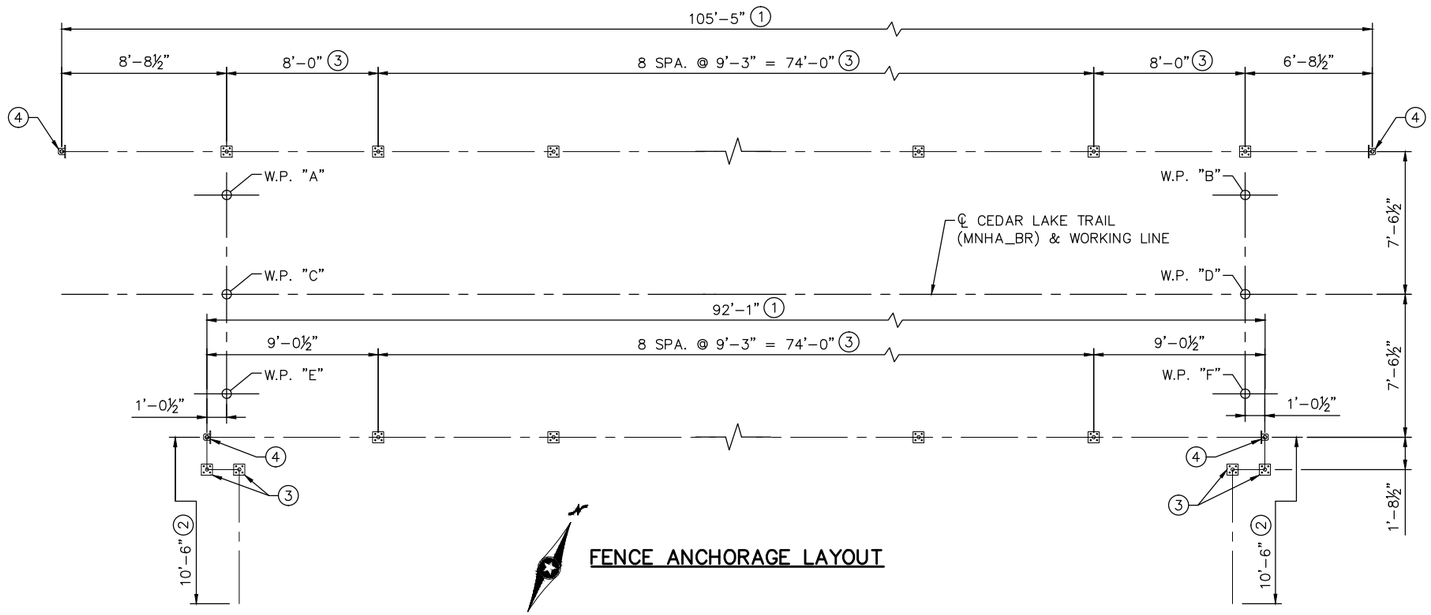

FENCE ANCHORAGE LAYOUT

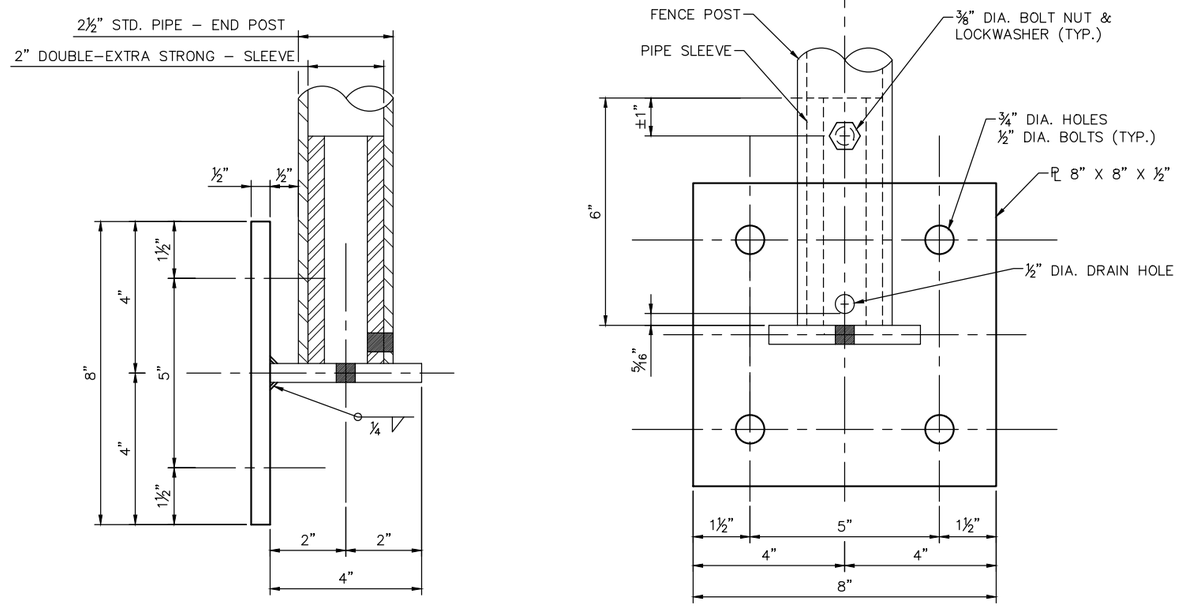

ELEVATION

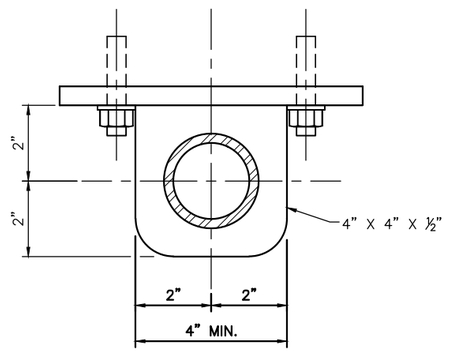

PLAN VIEW

SECTION

VERTICAL FENCE POST ANCHORAGE

NOTES:

FENCE SHALL RETAIN A 4" SPHERE UP TO 27" ABOVE GRADE, AND RETAINING A 6" SPHERE FROM 27" ABOVE GRADE TO TOP OF FENCE.

POST SHALL BE SET VERTICAL.

STRUCTURAL STEEL PER MnDOT SPEC. 3306.

STRUCTURAL PIPE PER MnDOT SPEC. 3362.

GALVANZING THE FENCE POST ANCHORAGE AFTER FABRICATION PER MnDOT SPEC. 3394. GALVANIZE THE FASTENERS PER SPEC. 3392.

(1) 48" TALL WIRE FENCE FABRIC.

(2) 72" TALL WIRE FENCE FABRIC.

(3) FENCE POST ANCHORAGES SHALL BE TYPE A. SEE DETAIL B905.

(4) VERTICAL FENCE POST ANCHORAGE, SEE DETAILS THIS SHEET.

NO.	DATE	BY	CHECK	DESIGN	REVISION / SUBMITTAL

DESIGNED BY: BAW | CHECKED BY: BLF
DRAWN BY: LMT | CHECKED BY: BLF

AECOM Kimley»Horn

90% SUBMISSION - 01/22/16

METROPOLITAN COUNCIL

SOUTHWEST Green Line LRT Extension

CIVIL - VOLUME 4D
MINNEHAHA CREEK TRAIL BRIDGE
BRIDGE R0687
SUPERSTRUCTURE DETAILS 4

DISCIPLINE: STRUCTURES
SHEET NAME: CBRR0687-BRG-DTL-003

SHEET 27 OF 46

Dec, 10 2015 08:12 am V:\3400_ADC\CAD\SEGMENT E2\PLAN SHEETS\STRUCTURES\MNHA-TRL\CBRR0687-BRG-DTL-003.dwg By: brian.fleming

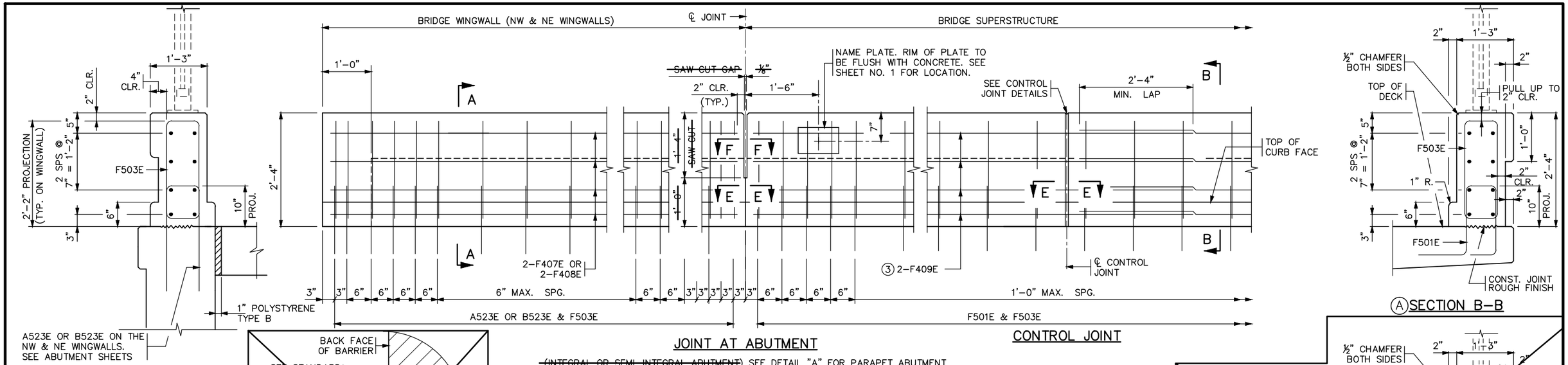

Ⓐ SECTION A–A

JOINT AT ABUTMENT

CONTROL JOINT

Ⓐ SECTION B–B

~~(INTEGRAL OR SEMI INTEGRAL ABUTMENT)~~ SEE DETAIL "A" FOR PARAPET ABUTMENT

Ⓐ INSIDE ELEVATION OF PARAPET

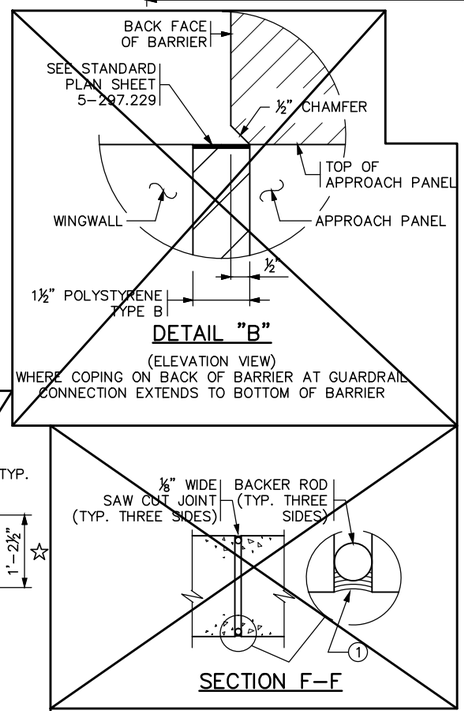

DETAIL "B"

(ELEVATION VIEW)
WHERE COPING ON BACK OF BARRIER AT GUARDRAIL CONNECTION EXTENDS TO BOTTOM OF BARRIER

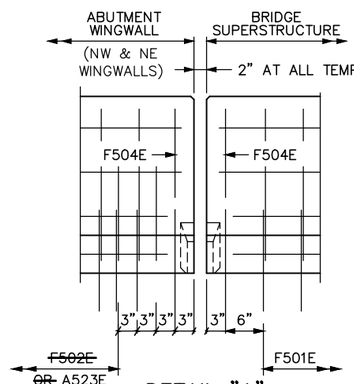

DETAIL "A" ②

(USE ONLY WITH STRIP SEAL EXPANSION DEVICE)
(EXPANSION DEVICE NOT SHOWN)

BILL OF REINFORCEMENT FOR PARAPET

BAR	NO.	LENGTH	SHAPE	LOCATION
F501E	190	5'-2"		PARAPET VERTICAL
~~F502E~~	~~—~~	~~5'-4"~~		~~PARAPET VERTICAL~~
F503E	224	6'-5"		PARAPET VERTICAL
F504E	6	4'-9"		PARAPET VERTICAL
~~F505E~~	~~—~~	~~8'-1"~~		~~PARAPET VERTICAL~~
~~F706E~~	~~—~~	~~6'-7"~~		~~PARAPET VERTICAL~~
F407E	8	7'-2"		NW WW PARAPET LONG.
F408E	8	5'-2"		NE WW PARAPET LONG.
F409E	48	32'-0"		PARAPET LONG.

* F504E WHEN STRIP SEAL EXPANSION DEVICE IS USED, WITHOUT RAISED SIDEWALK. (SEE DETAIL "A")

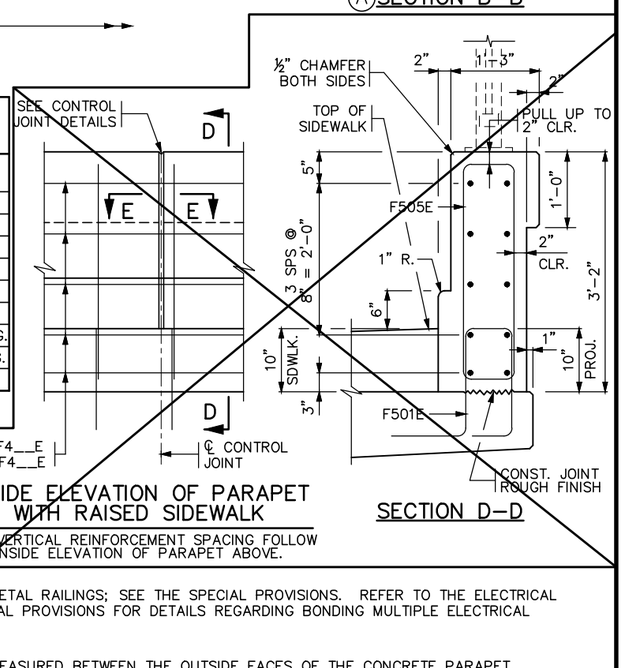

INSIDE ELEVATION OF PARAPET WITH RAISED SIDEWALK

FOR VERTICAL REINFORCEMENT SPACING FOLLOW INSIDE ELEVATION OF PARAPET ABOVE.

SECTION D–D

SHEET MODIFICATION:
Ⓐ DENOTES MODIFICATION TO STANDARD SHEET

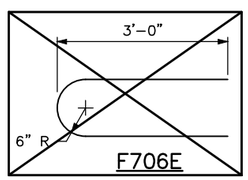

F706E

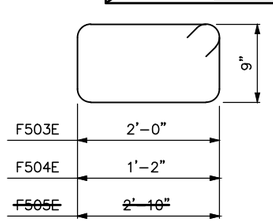

F503E, F504E ~~AND F505E~~

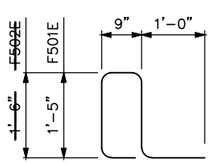

F501E, ~~F502E~~

GENERAL NOTES

CONTINUOUSLY GROUND ALL METAL RAILINGS; SEE THE SPECIAL PROVISIONS. REFER TO THE ELECTRICAL PLANS AND ELECTRICAL SPECIAL PROVISIONS FOR DETAILS REGARDING BONDING MULTIPLE ELECTRICAL GROUNDING SYSTEMS.

PAYMENT LENGTH SHALL BE MEASURED BETWEEN THE OUTSIDE FACES OF THE CONCRETE PARAPET.

CONCRETE PARAPET = 416 LBS./FT. (0.103 CU. YDS./FT.)

~~CONCRETE PARAPET W/ADJACENT SIDEWALK (BASED ON A 10" SIDEWALK HEIGHT) = 573 LBS./FT. (0.141 CU. YDS./FT.)~~

FINISH ALL EDGES OF PARAPET WITH ½" CHAMFER, EXCEPT WHERE OTHERWISE NOTED.

MAXIMUM SPACING OF CONTROL JOINTS ON SUPERSTRUCTURE, APPROACH AND WINGWALL SHALL BE 10 FT. SEE SUPERSTRUCTURE SHEET FOR JOINT SPACING.

~~GUARDRAIL CONNECTION TO BE STRUCTURAL STEEL, SPEC. 3306. GUARDRAIL CONNECTION AND NAME PLATE TO BE CONSIDERED INCIDENTAL TO "TYPE P-1 (TL-2) PARAPET CONCRETE (3552)".~~

~~SEE STANDARD FIGURE 5-397.___ FOR LIGHT BLISTER DETAILS.~~

~~PARAPET QUANTITIES ARE LISTED IN SUMMARY OF QUANTITIES FOR SUPERSTRUCTURE.~~

① JOINT SEALANT PER MnDOT APPROVED/QUALIFIED PRODUCTS LIST – CRACK AND JOINT MATERIALS – SILICONE JOINT SEALERS.

② REFER TO EXPANSION JOINT SHEET FOR COVER PLATE DETAILS.

③ 3 BARS PER LINE WITH 2'-4" MIN. LAP.

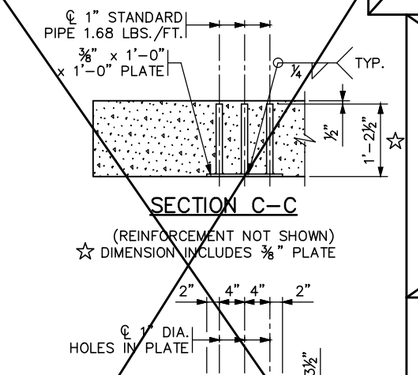

SECTION C–C

(REINFORCEMENT NOT SHOWN)
☆ DIMENSION INCLUDES ⅜" PLATE

GUARDRAIL CONNECTION DETAIL

GALVANIZE AFTER FABRICATION PER SPEC. 3394. ESTIMATED WEIGHT = 23 LBS

SECTION F–F

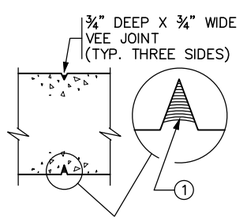

SECTION E–E

CONTRACTOR OPTION 1

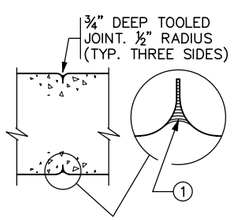

SECTION E–E

CONTRACTOR OPTION 2

CONTROL JOINT DETAILS

WHEN USING SLIP FORM METHOD TO PLACE THE CONCRETE, CUT JOINT 3 INCHES DEEP USING MARGIN TROWEL OR SIMILAR MEANS IMMEDIATELY AFTER CONCRETE PLACEMENT (TYP. THREE SIDES)

REVISION:

APPROVED: NOVEMBER 6, 2013
Nancy Daubenberger
STATE BRIDGE ENGINEER

CERTIFIED BY _____ LICENSED PROFESSIONAL ENGINEER _____ DATE

NAME: _____ LIC. NO.

TITLE: CONCRETE PARAPET (TYPE P-1)
WITH INTEGRAL END POST
(WITHOUT CONCRETE WEARING COURSE)

DES: BAW	DR: NAO	APPROVED:
CHK: BLF	CHK: BLF	

SHEET NO. 28 OF 46 SHEETS

FIG. 5–397.166 (MOD.)

BRIDGE NO. R0687

Dec. 10 2015 08:12 am V:\3400_ADC\CAD\SEGMENT E2\PLAN SHEETS\STRUCTURES\MNHA-TRL\CBRR0687-BRG-RAL-001.dwg By: brian.fleming

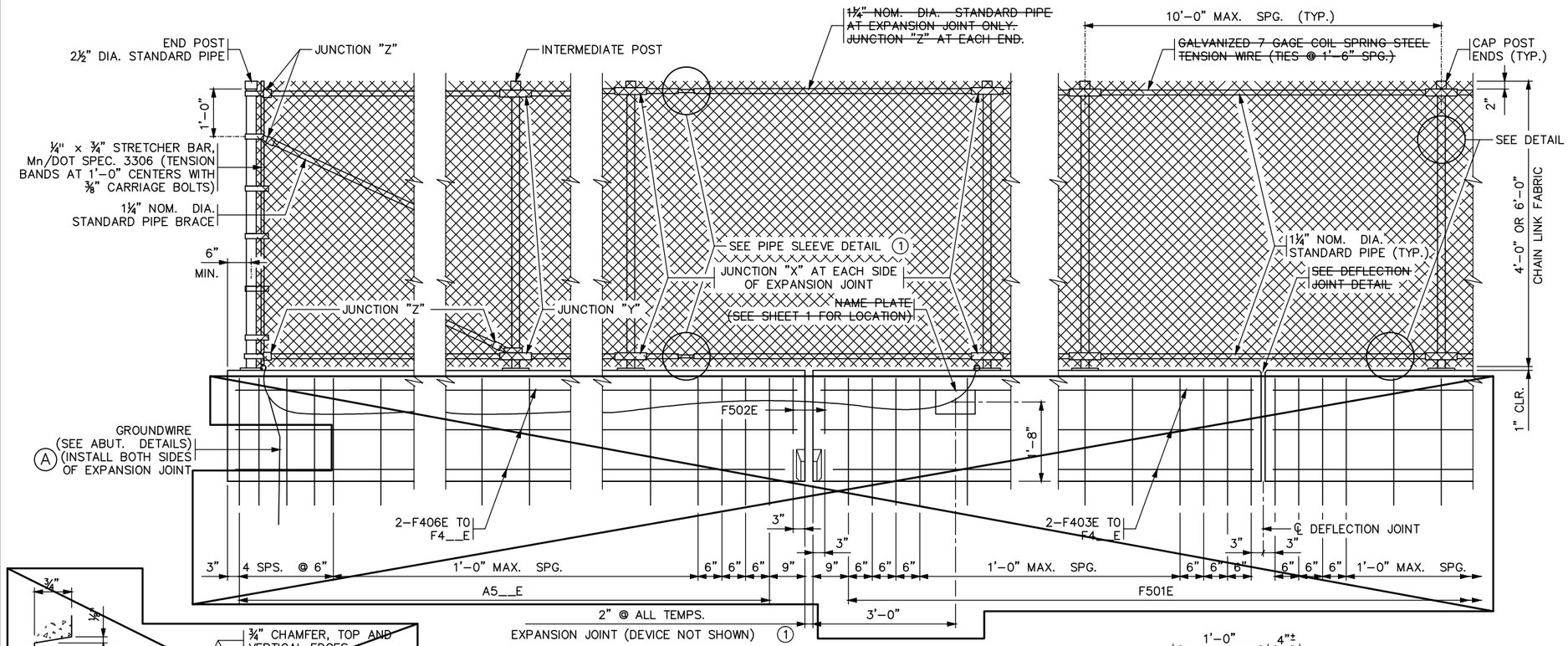

A INSIDE ELEVATION OF RAILING

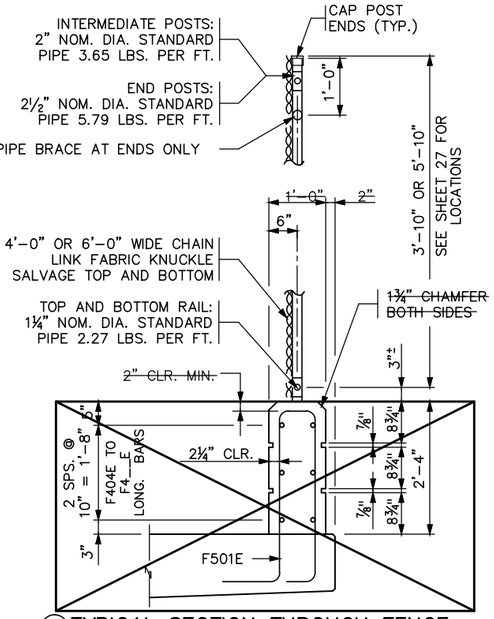

A TYPICAL SECTION THROUGH FENCE

INTERMEDIATE POST SHOWN

SHEET MODIFICATION:
A DENOTES MODIFICATION TO STANDARD SHEET

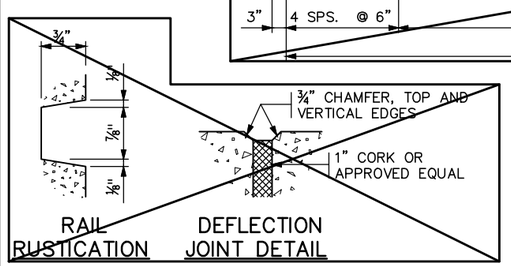

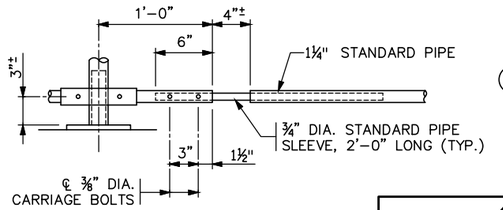

PIPE SLEEVE DETAIL (1)

GENERAL NOTES

A SEE CONCRETE PARAPET TYPE P-1 SHEET FOR PARAPET DIMENSIONS, REINFORCEMENT AND NOTES.

~~LENGTH OF "TYPE P-1 RAILING CONCRETE (3Y46 OR 3Y46A)" FOR PAYMENT SHALL BE MEASURED BETWEEN THE OUTSIDE FACES OF THE CONCRETE RAIL.~~

LENGTH OF "WIRE FENCE DESIGN W-1" ~~FOR PAYMENT~~ SHALL BE MEASURED BETWEEN THE CENTERS OF END RAILPOSTS. SEE SHEET 27.

~~CONCRETE RAILING = 350 LBS./FT. (0.086 CU. YDS./FT.)~~

A FOR FENCE POST ANCHORAGES SEE SHEET 27.

~~MAXIMUM SPACING OF DEFLECTION JOINTS SHALL BE 20 FT. FOR SPACING OF FENCE POST, JOINTS AND ELECTRICAL GROUNDS, SEE SUPERSTRUCTURE SHEETS.~~

FENCE POSTS AND FENCE POST ANCHORAGES SHALL BE SET VERTICAL, UNLESS OTHERWISE NOTED.

℄ OF FENCE POST ANCHORAGE SHALL BE A MINIMUM OF 6" FROM JOINTS.

END POSTS AND BRACING SHALL BE AT 500 FT. MAXIMUM INTERVALS.

~~ALL POSTS SHALL HAVE A MEANS TO SECURELY HOLD THE TOP TENSION WIRE IN POSITION AND ALLOW FOR THE REMOVAL AND REPLACEMENT OF A POST WITHOUT DAMAGING THE TOP WIRE.~~

WIRE TIES MAY BE 9 GAGE GALVANIZED STEEL OR 0.179" MIN. ALUMINUM ALLOY CONFORMING TO A.S.T.M. B211, ALLOY 1100-H18. ~~USE 12½ GAGE GALVANIZED HOG RINGS FOR TENSION WIRE TIES.~~

~~ALL MATERIAL IN THE CONCRETE BASE AND END POST IS INCLUDED IN THE SUPERSTRUCTURE QUANTITIES.~~

SEE SPECIAL PROVISIONS FOR REQUIREMENTS NOT INCLUDED ON THIS SHEET. ~~AND FOR BASIS OF PAYMENT.~~

(1) PROVIDE PIPE SLEEVE IN SPAN BETWEEN THE VERTICAL POSTS AT EXPANSION JOINT. SEE SUPERSTRUCTURE SHEETS FOR LOCATION.

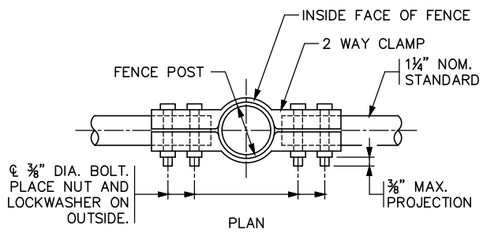

2 WAY CLAMP BENDING TABLE	
GRADE OF FENCE	Ø
0° TO 2°	0°
2° TO 6°	4°
6° TO 10°	8°

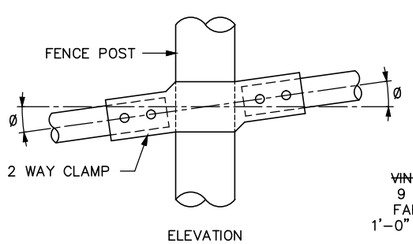

JUNCTION "X"

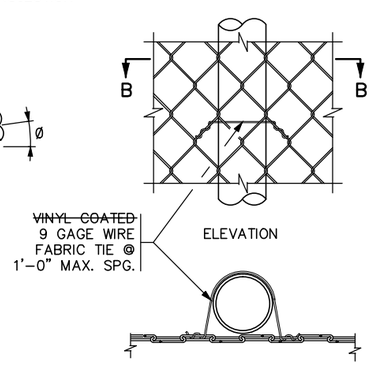

DETAIL "A"

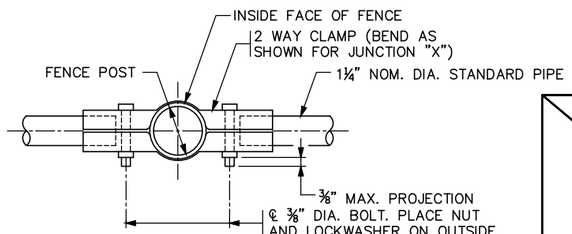

JUNCTION "Y"

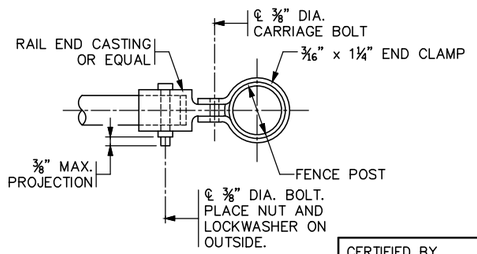

JUNCTION "Z"

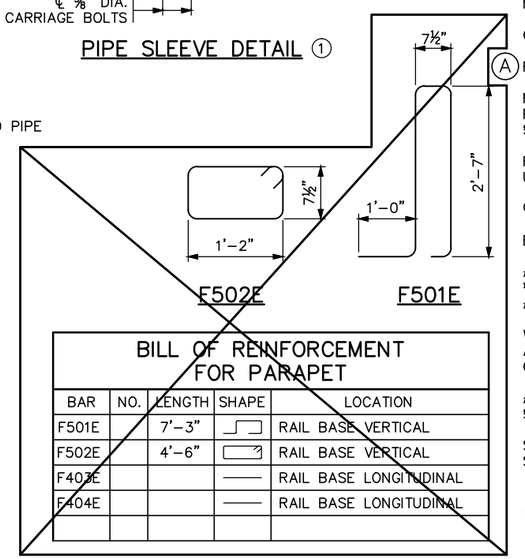

BILL OF REINFORCEMENT FOR PARAPET				
BAR	NO.	LENGTH	SHAPE	LOCATION
F501E		7'-3"		RAIL BASE VERTICAL
F502E		4'-6"		RAIL BASE VERTICAL
F403E				RAIL BASE LONGITUDINAL
F404E				RAIL BASE LONGITUDINAL

FIG. 5-397.119 (MOD.)

REVISED: 04-17-2013

APPROVED: DECEMBER 18, 2003

STATE BRIDGE ENGINEER

CERTIFIED BY _____ LICENSED PROFESSIONAL ENGINEER _____ DATE

NAME: LIC. NO.

TITLE: WIRE FENCE (DESIGN W-1) A

DES: BAW	DR: RHK	APPROVED:	BRIDGE NO.
CHK: BLF	CHK: BLF		R0687

SHEET NO. 29 OF 46 SHEETS

Dec, 10 2015 08:12 am V:\3400_ADC\CAD\SEGMENT E2\PLAN SHEETS\STRUCTURES\MNHA-TRL\CBRR0687-BRG-RAL-001.dwg By: brian.fleming

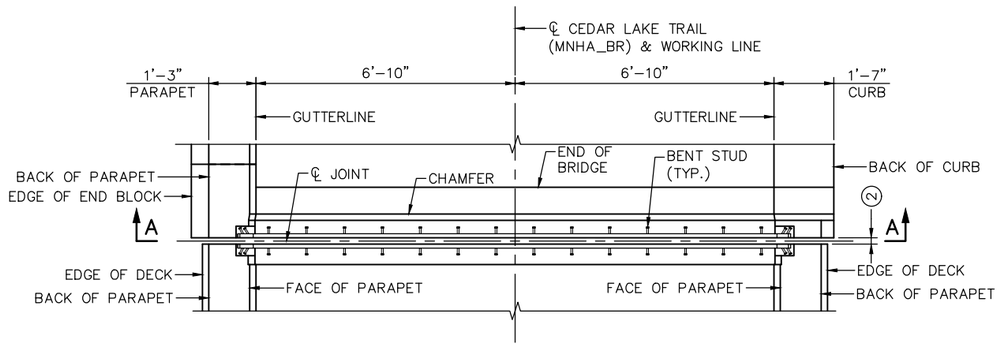

PLAN @ EXPANSION DEVICE

COVER PLATE NOT SHOWN FOR CLARITY
EAST JOINT SHOWN
WEST JOINT SIMILAR

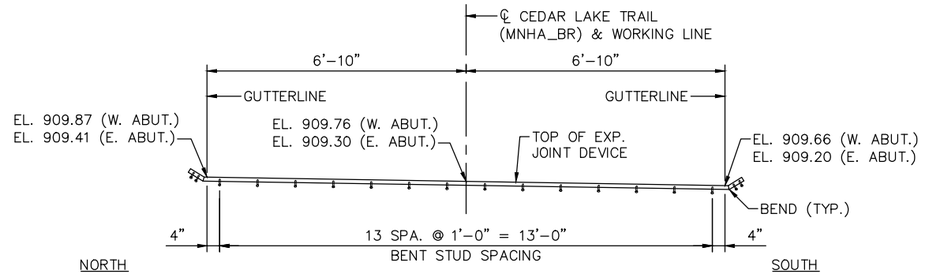

SECTION A–A – ALONG CENTERLINE JOINT

ELEVATIONS SHOWN ARE ½" BELOW TOP OF DECK
@ CENTERLINE JOINT (LOOKING UPSTATION)

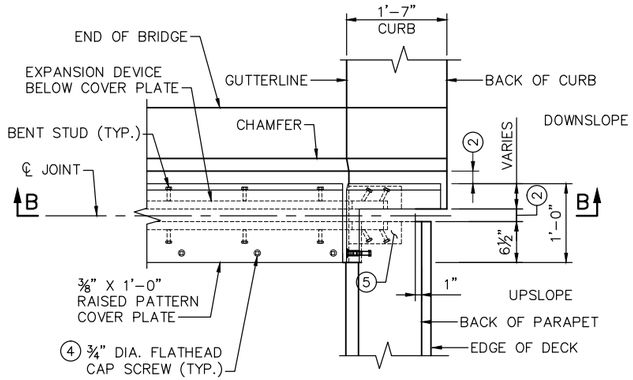

PLAN @ CURB

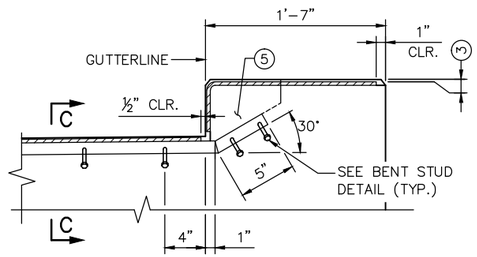

SECTION B–B

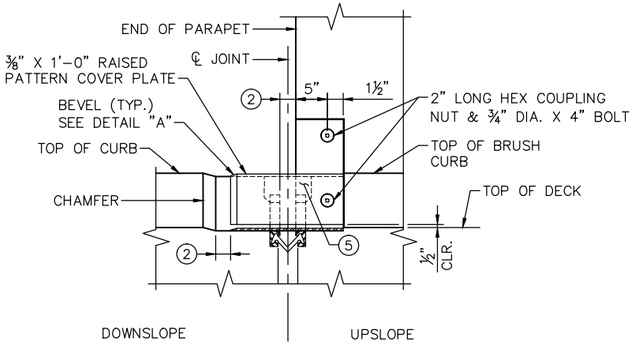

CURB ELEVATION

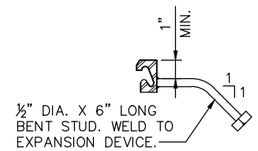

BENT STUD DETAIL

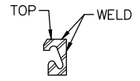

SECTION VIEW @ BEND

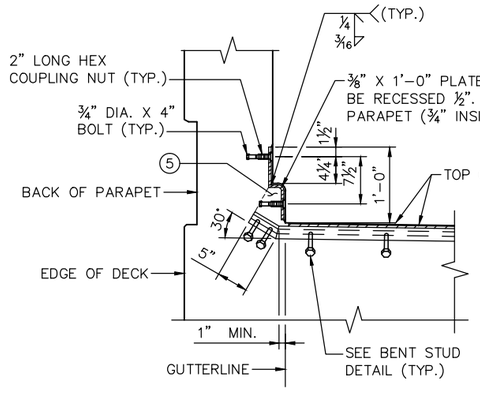

CONCRETE PARAPET SECTION

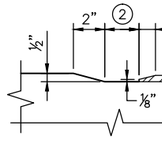

DETAIL "A"

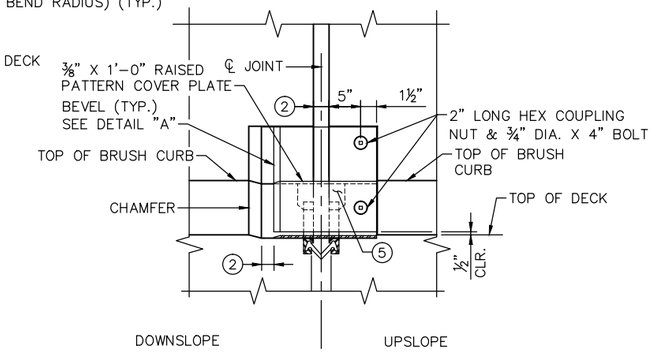

CONCRETE PARAPET ELEVATION

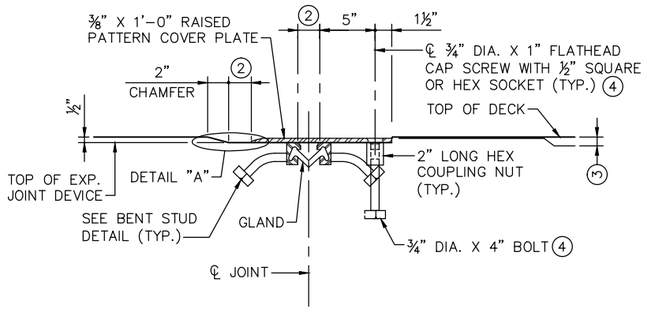

SECTION C–C

NOTES:

GALVANIZE STRUCTURAL STEEL AFTER FABRICATION AS PER SPEC. 3394. GALVANIZE FASTENERS AS PER SPEC. 3392.

JOINTS IN EXTRUSION SHALL BE LOCATED AT BREAKS IN TRANSVERSE PROFILE AND AS OTHERWISE REQUIRED. JOINTS SHALL BE CLOSE FIT AND WELDED. REPAIR AFTER WELDING AS PER SPEC. 2471.3.L.

STRUCTURAL STEEL SHALL COMPLY WITH SPEC. 3306.

EXPANSION DEVICE SHALL BE STRAIGHTENED TO A TOLERANCE OF ⅛" IN 10 FT.

CAP SCREWS SHALL BE COUNTERSUNK 1/16" BELOW TOP OF PLATE.

LENGTH OF "EXPANSION JOINT DEVICES TYPE 4" SHALL BE MEASURED FROM OUT TO OUT OF EXTRUSION ALONG CENTERLINE OF JOINT.

(1) EXPANSION DEVICE ELEVATIONS SHOWN ARE ½" BELOW FINISHED DECK ELEVATIONS. COVER PLATE SHALL BE INSTALLED PER TOLERANCE SHOWN IN SECTION C–C.

(2) 2" AT ALL TEMPERATURES.

(3) TOP OF CONCRETE TO TOP OF COVER PLATE ⅛" (¼" MAX.).

(4) MAXIMUM TRANSVERSE SPACING OF ¾" DIA. FLATHEAD SCREWS AND COUPLINGS SHALL BE 1'–0".

(5) MINIMAL AMOUNT OF CURB CONCRETE ABOVE EXPANSION DEVICE SHALL BE BLOCKED OUT FOR GLAND INSTALLATION.

NO.	DATE	BY	CHECK	DESIGN	REVISION / SUBMITTAL

DESIGNED BY: BAW | CHECKED BY: BLF
DRAWN BY: LMT | CHECKED BY: BLF

AECOM Kimley»Horn

90% SUBMISSION - 01/22/16

METROPOLITAN COUNCIL

SOUTHWEST Green Line LRT Extension

CIVIL - VOLUME 4D
MINNEHAHA CREEK TRAIL BRIDGE
BRIDGE R0687
WATERPROOF EXPANSION DEVICE

DISCIPLINE: STRUCTURES
SHEET NAME: CBRR0687-BRG-EXP-001

SHEET 30 OF 46

Dec, 10 2015 08:13 am V:\3400_ADC\CAD\SEGMENT E2\PLAN SHEETS\STRUCTURES\MNHA-TRL\CBRR0687-BRG-EXP-001.dwg By: brian.fleming

BILL OF REINFORCEMENT FOR APPROACH PANEL				
BAR	NO.	LENGTH	SHAPE	LOCATION
AP501E	34	7'-8"	STR.	LONGITUDINAL
AP502E	18	14'-10"	STR.	TRANSVERSE
AP403E	4	4'-1"	BENT	CURB, VERTICAL
AP404E	4	3'-9"	BENT	CURB, VERTICAL
AP505E	2	7'-8"	BENT	CURB, LONG

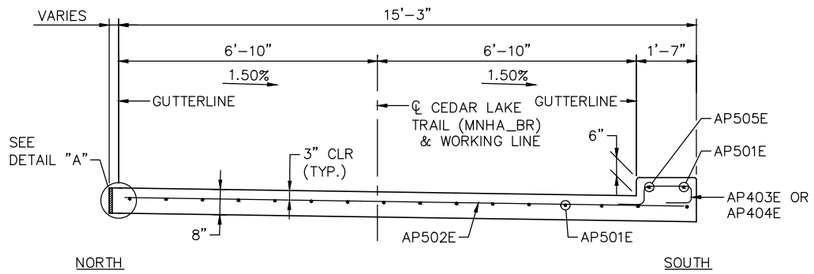

SECTION VIEW
APPROACH PANEL

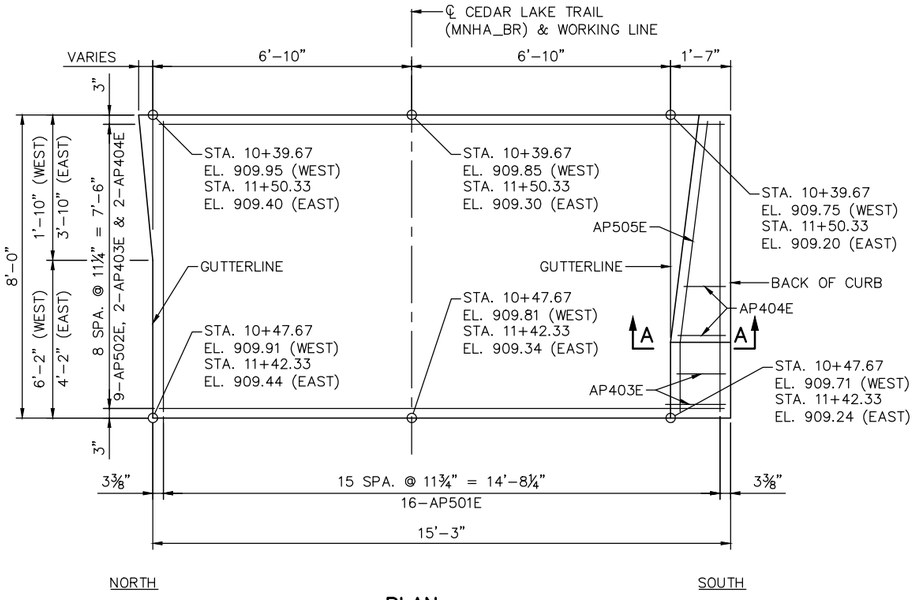

PLAN
EAST APPROACH PANEL SHOWN
WEST APPROACH PANEL SIMILAR

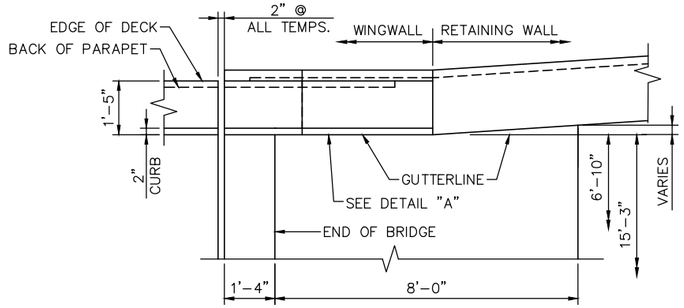

PLAN – NORTH GUTTERLINE
EAST PANEL SHOWN
WEST PANEL SIMILAR

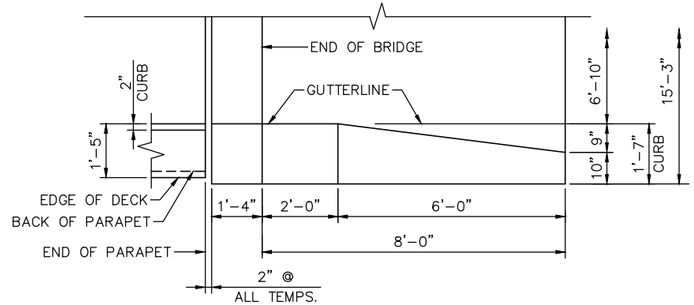

PLAN – SOUTH GUTTERLINE
EAST PANEL SHOWN
WEST PANEL SIMILAR

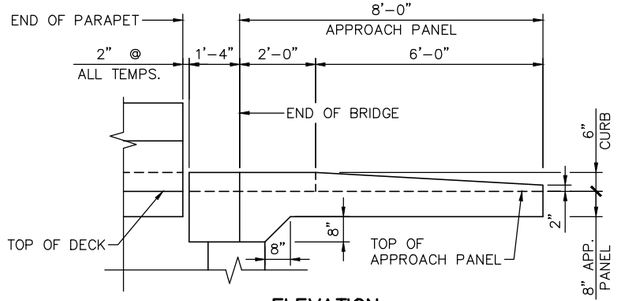

ELEVATION
SOUTH CURB EAST PANEL SHOWN

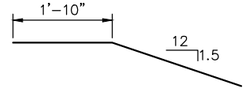

AP505E

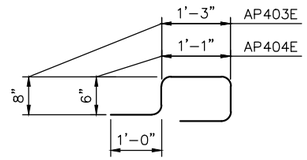

AP403E & AP404E

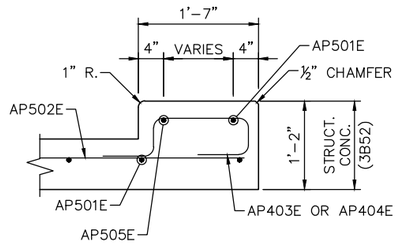

SECTION A–A

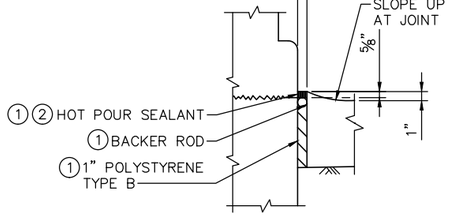

DETAIL "A"

NOTES:
1. ① HOT POUR SEALANT, BACKER ROD, POLYSTYRENE SHALL BE LOCATED BETWEEN WALLS AND APPROACH PANELS.
2. ② HOT POUR SEALANT SPEC. 3725. TOP OF SEALER FLUSH TO ⅛" BELOW TOP OF PAVEMENT SURFACE.

NO.	DATE	BY	CHECK	DESIGN	REVISION / SUBMITTAL

DESIGNED BY: BAW | CHECKED BY: BLF
DRAWN BY: LMT | CHECKED BY: BLF

AECOM Kimley»Horn

90% SUBMISSION - 01/22/16

METROPOLITAN COUNCIL

SOUTHWEST Green Line LRT Extension

CIVIL - VOLUME 4D
MINNEHAHA CREEK TRAIL BRIDGE
BRIDGE R0687
APPROACH PANEL DETAILS

DISCIPLINE: STRUCTURES
SHEET NAME: CBRR0687-BRG-DTL-001

SHEET 31 OF 46

Dec, 10 2015 08:13 am V:\3400_ADC\CAD\SEGMENT E2\PLAN SHEETS\STRUCTURES\MNHA-TRL\CBRR0687-BRG-DTL-001.dwg By: brian.fleming

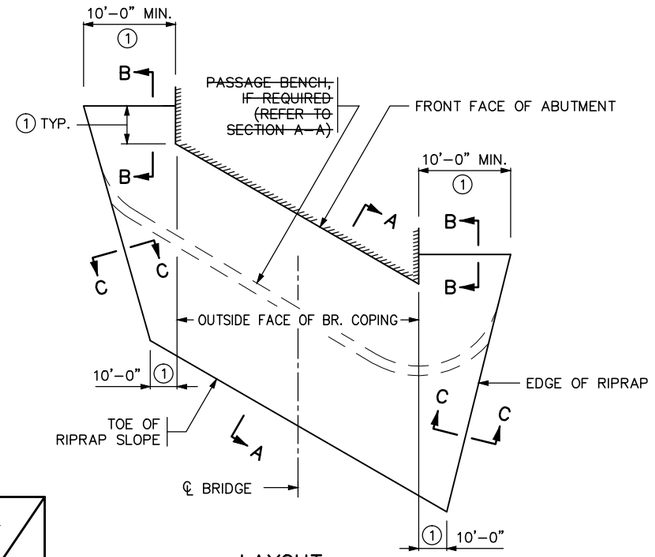

LAYOUT

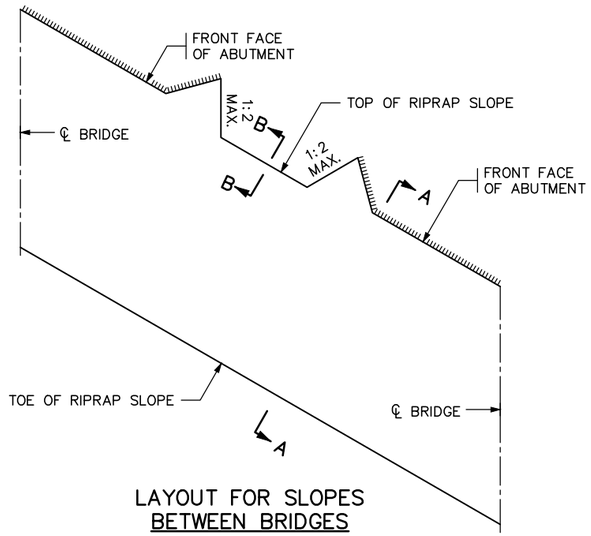

LAYOUT FOR SLOPES BETWEEN BRIDGES

GENERAL NOTES

GEOTEXTILE FILTER TYPE 7 PER SPEC. 3733, BY THE SQ. YD.

RIPRAP PER SPEC. 2511, RANDOM RIPRAP CLASS IV BY THE CU. YD.

SLOPES ARE EXPRESSED AS A RATIO OF VERTICAL DISTANCE : HORIZONTAL DISTANCE.

SLOPE BOTTOM OF TRENCHES 1:20 PARALLEL TO ABUTMENT FACE TO PROVIDE POSITIVE DRAINAGE.

(1) SEE PLAN SHEET NO. 1 FOR DIMENSIONS, AND FOR ELEVATIONS OF RIPRAP TOE. ~~AND PASSAGE BENCHES.~~

(2) PLACE RIPRAP IN TRENCH TO HOLD THE GEOTEXTILE FABRIC IN PLACE BEFORE PLACING THE REST OF THE RIPRAP (FROM THE BOTTOM OF THE SLOPE).

(3) OVERLAP GEOTEXTILE FILTER 2'-0" MINIMUM.

(4) WRAP GEOTEXTILE FILTER AROUND TOE, OVERHANG BETWEEN 1ST AND 2ND LAYER OF RIPRAP. USE HAND PLACEMENT OR SIMILAR METHODS TO ESTABLISH PROFILE AND PLACE FABRIC IF UNDER WATER.

(5) BURY EDGES OF GEOTEXTILE FILTER TO DIRECT WATER FLOW OVER THE FABRIC WITHOUT UNDERMINING.

(6) OMIT THE TRENCH SHOWN IN DETAIL "D" AND THE 15'-0" MAXIMUM SPACING BETWEEN TRENCHES FOR SLOPES 1:3 OR FLATTER.

(7) ~~SURFACE BENCHES WITH AGGREGATE CLASS 5 (INCIDENTAL TO RIPRAP). TIE BENCHES TO NATURAL GROUNDLINES OUTSIDE OF BRIDGE.~~

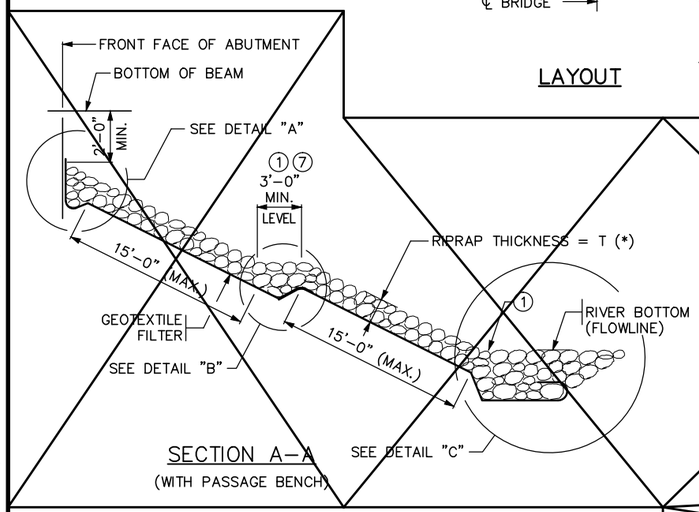

SECTION A-A
(WITH PASSAGE BENCH)

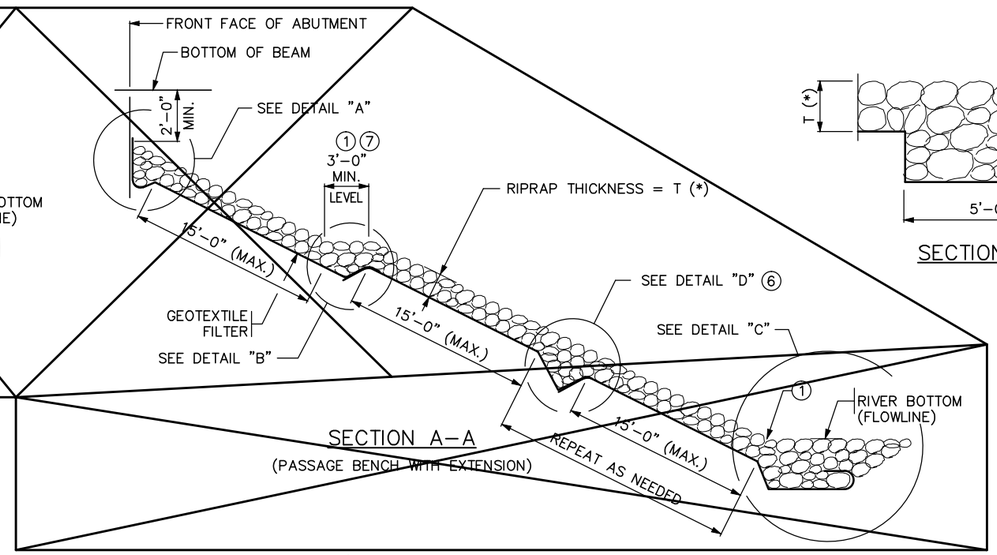

SECTION A-A
(PASSAGE BENCH WITH EXTENSION)

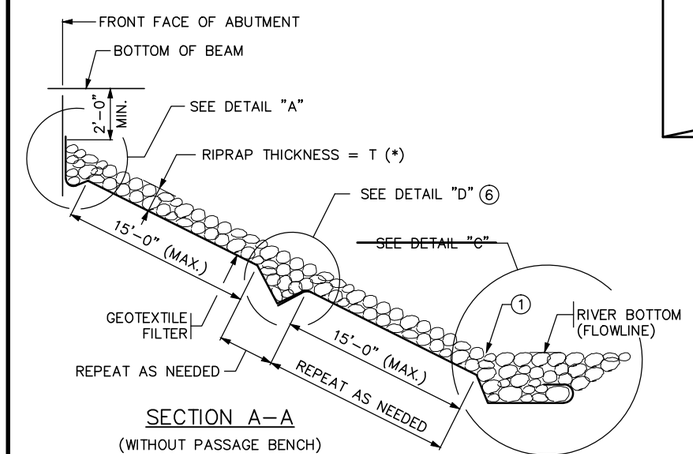

SECTION A-A
(WITHOUT PASSAGE BENCH)

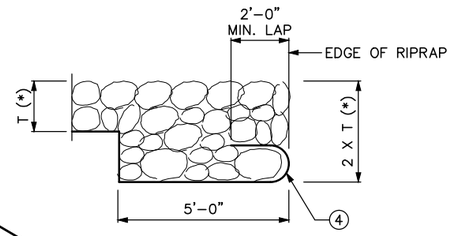

SECTION C-C

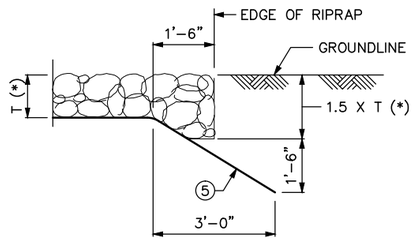

SECTION B-B

*	DIMENSION T
	~~CLASS III = 1' 6"~~
	CLASS IV = 2'-0"

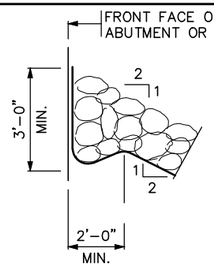

DETAIL "A"

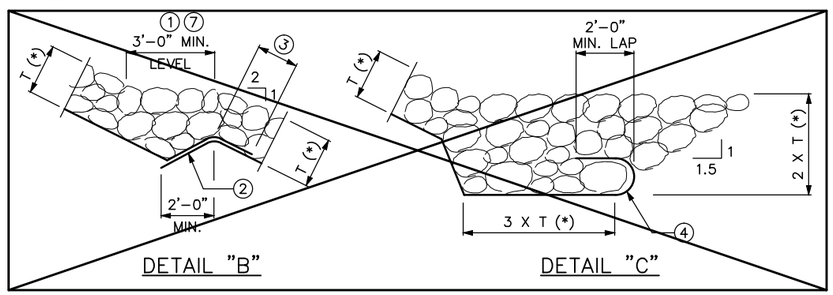

DETAIL "B" DETAIL "C"

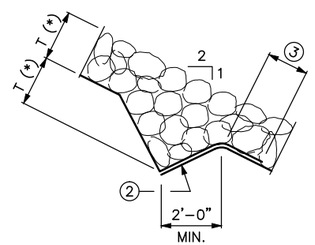

DETAIL "D"

REVISED: 09-11-2014

APPROVED: MAY 24, 2011
Nancy Dorbenberger
STATE BRIDGE ENGINEER

CERTIFIED BY _____ LICENSED PROFESSIONAL ENGINEER _____ DATE
NAME: _____ LIC. NO. _____

TITLE: RIPRAP SLOPE WITH GEOTEXTILE FILTER (SLOPES 1:2 AND FLATTER)

DES: BAW	DR: LMT	APPROVED:
CHK: BLF	CHK: BLF	
SHEET NO. 32 OF 46 SHEETS		

FIG. 5-397.309

BRIDGE NO. R0687

Dec. 10 2015 08:13 am V:\3400_ADC\CAD\SEGMENT E2\PLAN SHEETS\STRUCTURES\MNHA-TRL\CBRR0687-BRG-DTL-005.dwg By: brian.fleming

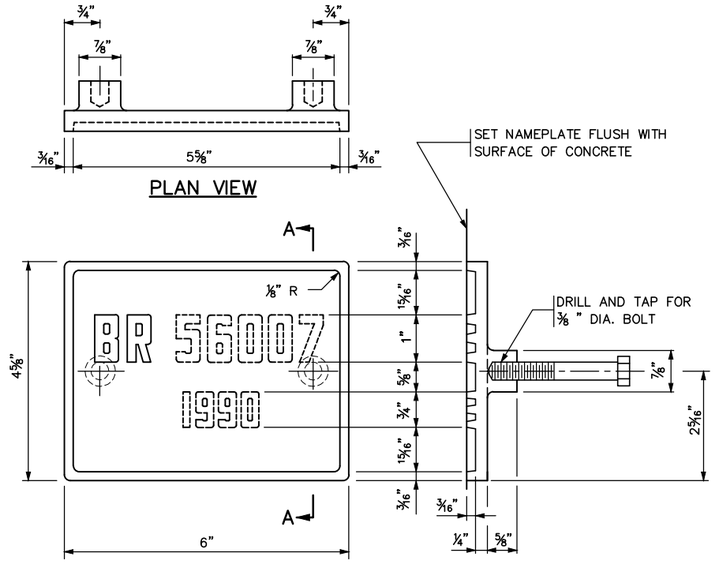

THE DASHED NUMBERS SHOWN ABOVE ARE FOR ILLUSTRATION.
DATA TO BE SHOWN ON NAMEPLATE IS AS FOLLOWS:

BRIDGE R0687

YEAR (1)



NUMBERS FOR NAMEPLATE

NOTES:

MATERIAL SHALL COMPLY WITH SPEC. 3327.

LETTERS AND NUMBERS SHALL CONFORM TO THOSE SHOWN.

DRAFT ON LETTERS AND NUMBERS SHALL NOT BE MORE THAN 3" IN 12".

HORIZONTAL SPACING OF LETTERS AND NUMBERS SHALL PRODUCE A BALANCED LAYOUT IN PROPORTION TO SPACING SHOWN.

TOP SURFACE OF LETTERS, NUMBERS AND FRAMES SHALL BE BURNISHED.

FURNISH 2 STEEL BOLTS ⅜ " DIA. x 3" LONG WITH EACH PLATE.

ALL DIMENSIONS FOR ¾" HIGH LETTERS AND NUMBERS SHALL BE IN DIRECT PROPORTION TO THOSE SHOWN FOR THE 1" HIGH LETTERS AND NUMBERS.

(1) YEAR OF CONSTRUCTION

APPROVED: NOVEMBER 22, 2002	STATE OF MINNESOTA DEPARTMENT OF TRANSPORTATION	REVISION 09–11–2014	DETAIL NO.
Daniel L Hogan STATE BRIDGE ENGINEER	BRIDGE NAMEPLATE (FOR NEW BRIDGES)		B101

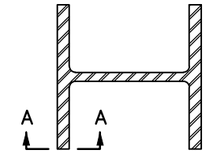

SECTION AT SPLICE

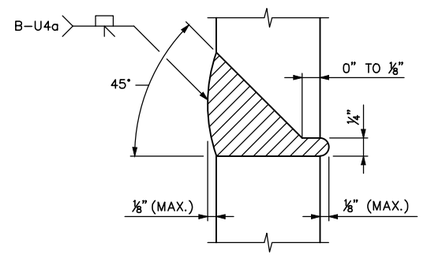

SECTION A–A

100% BUTT WELDED PILE SPLICE

NOTES:

CELLULOSIC TYPE ELECTRODES E–6010 OR E–6011 SHALL BE USED FOR 100% BUTT WELDED SPLICES.

ELECTRODES WHICH HAVE BECOME WET, SOILED OR DAMAGED SHALL NOT BE USED.

WELDING SHALL NOT BE DONE WHEN THE AMBIENT TEMPERATURE IS LOWER THAN 0° F. OR WHEN THE PILE IS WET OR EXPOSED TO FALLING RAIN OR SNOW. WHEN THE PILE METAL TEMPERATURE IS BELOW 32° F., THE PILE METAL IN THE AREA OF THE WELD SHALL BE HEATED TO A MINIMUM TEMPERATURE OF 70° F. AND MAINTAINED AT THIS TEMPERATURE DURING WELDING.

APPROVED: NOVEMBER 22, 2002	STATE OF MINNESOTA DEPARTMENT OF TRANSPORTATION	REVISION: 11–06–2013	DETAIL NO.
Daniel L Hogan STATE BRIDGE ENGINEER	PILE SPLICE (STEEL H BEARING PILES 10" TO 14")		B202

NO.	DATE	BY	CHECK	DESIGN	REVISION / SUBMITTAL

DESIGNED BY: BAW CHECKED BY: BLF

DRAWN BY: NAO CHECKED BY: BLF

AECOM Kimley»Horn

90% SUBMISSION - 01/22/16

METROPOLITAN COUNCIL

SOUTHWEST Green Line LRT Extension

CIVIL - VOLUME 4D
MINNEHAHA CREEK TRAIL BRIDGE
BRIDGE R0687
BRIDGE DETAILS 1

DISCIPLINE: STRUCTURES

SHEET NAME: CBRR0687-BRG-DTL-002-1

SHEET 33 OF 46

Dec, 10 2015 08:14 am V:\3400_ADC\CAD\SEGMENT E2\PLAN SHEETS\STRUCTURES\MNHA-TRL\CBRR0687-BRG-DTL-002.dwg By: brian.fleming

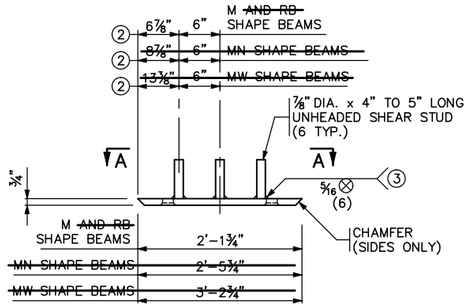

FRONT ELEVATION

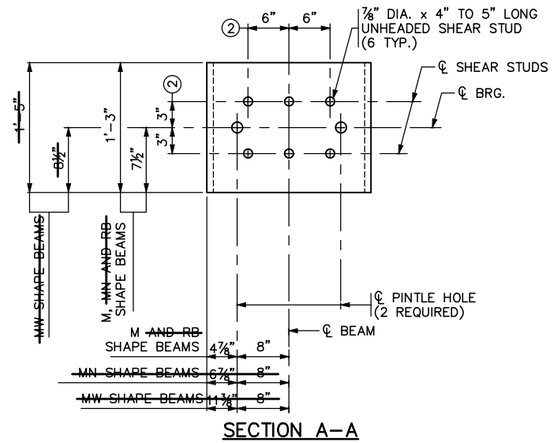

SECTION A–A

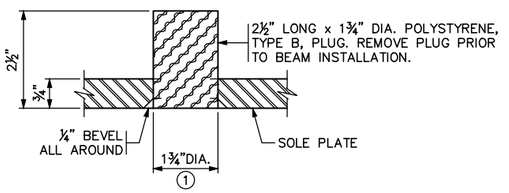

PINTLE HOLE DETAIL

NOTES:

MATERIAL TO BE STRUCTURAL STEEL PER MnDOT SPEC. 3306.

WELDED STUDS TO BE WELDABLE CARBON STEEL PER MnDOT SPEC. 3391.2D.

SOLE PLATE FOR BEARING ASSEMBLY TO BE GALVANIZED PER MnDOT SPEC. 3394 AFTER FABRICATION.

PINTLE HOLES SHALL BE FREE OF ZINC BUILD UP FROM GALVANIZING.

~~SOLE PLATES ARE INCIDENTAL TO PRESTRESSED CONCRETE BEAMS.~~

① FOR 1½" DIA. PINTLES.

② THESE DIMENSIONS MAY BE MODIFIED TO CLEAR PRESTRESSED STRANDS. HOWEVER, CHANGES MUST BE APPROVED BY THE ENGINEER.

③ THE REQUIREMENTS FOR WELDING STUDS SHALL COMPLY WITH AASHTO/AWS D1.1.

APPROVED: SEPTEMBER 22, 2011	STATE OF MINNESOTA DEPARTMENT OF TRANSPORTATION	REVISED	DETAIL NO.
Nancy Daubenberger STATE BRIDGE ENGINEER	SOLE PLATE (PRESTRESSED CONCRETE BEAMS) (FOR BEARINGS WITH PINTLES)		B303

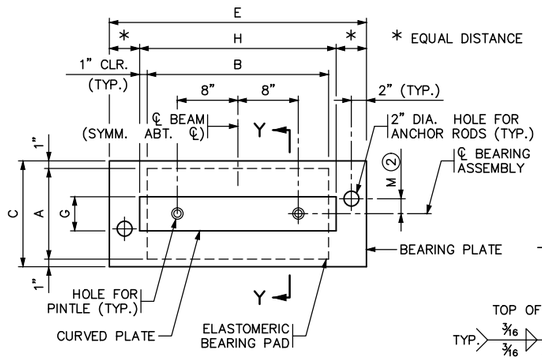

PLAN

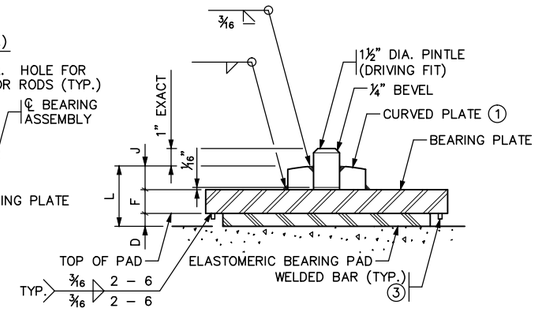

SECTION Y–Y

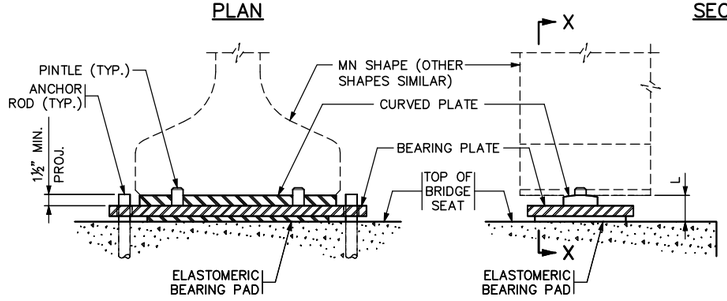

SECTION X–X

SIDE ELEVATION

ANCHOR RODS NOT SHOWN

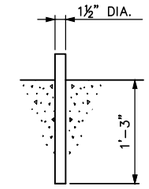

ANCHOR ROD DETAIL

TABLE

ASSEMBLY TYPE	LOCATION	BEAM SIZE	BEARING PAD SIZE A	B	D	SHAPE FACTOR	BEARING PLATE SIZE C	E	F	CURVED PLATE SIZE G	H	J	ANCHOR ROD OFFSET +/–②	M	ASSY. HEIGHT L	CURVED PLATE R ①
F1	E. ABUT.	36M	12"	24"	½"	8.0	14"	34"	1½"	4½"	26"	1¼"	NA	0"	3¼"	16"

NOTES:

PROVIDE ELASTOMERIC MATERIALS AND PAD CONSTRUCTION PER SPEC. 3741.

PROVIDE STEEL PLATES PER SPEC. 3306.

PROVIDE ANCHOR RODS PER SPEC. 3385, TYPE A. GALVANIZE PER SPEC. 3392.

PROVIDE PINTLES PER SPEC. 3309.

GALVANIZE STRUCTURAL STEEL BEARING ASSEMBLY AFTER FABRICATION PER SPEC. 3394, EXCEPT AS NOTED.

~~PAYMENT FOR BEARING ASSEMBLY INCLUDES ALL MATERIAL ON THIS DETAIL.~~

① THE MIN. RADIUS IS 16" UNLESS OTHERWISE SPECIFIED IN THE TABLE. THE MAX. RADIUS IS 24". FINISH TO 250 MICRO. THE FINISHED THICKNESS OF THE PLATE MAY BE 1/16" LESS THAN SHOWN.

② "+" DENOTES OFFSET AS SHOWN.
"–" DENOTES OFFSET OPPOSITE OF SHOWN.

③ ⅜" X ⅜" BAR INSTALLED ON BEARING PLATE AROUND PERIMETER OF BEARING PAD. BAR LENGTH IS 2" LESS THAN ADJACENT PAD DIMENSION, CENTERED ON PAD. CENTERLINE OF BAR TO EDGE OF PAD DIMENSION = ½".

DESIGN DATA:
MAXIMUM HORIZONTAL LOAD IS 70 KIPS FOR 1½" PINTLES.

APPROVED: SEPTEMBER 22, 2011	STATE OF MINNESOTA DEPARTMENT OF TRANSPORTATION	REVISED	DETAIL NO.
Nancy Daubenberger STATE BRIDGE ENGINEER	CURVED PLATE BEARING ASSEMBLY (PRESTRESSED CONCRETE BEAMS) (FIXED)	11–06–2013 11–03–2015	B310

NO.	DATE	BY	CHECK	DESIGN	REVISION / SUBMITTAL

DESIGNED BY: BAW CHECKED BY: BLF
DRAWN BY: NAO CHECKED BY: BLF

AECOM Kimley»Horn

90% SUBMISSION - 01/22/16

METROPOLITAN COUNCIL

SOUTHWEST Green Line LRT Extension

CIVIL - VOLUME 4D
MINNEHAHA CREEK TRAIL BRIDGE
BRIDGE R0687
BRIDGE DETAILS 2

DISCIPLINE: STRUCTURES
SHEET NAME: CBRR0687-BRG-DTL-002-2

SHEET 34 OF 46

Dec. 10 2015 08:14 am V:\3400_ADC\CAD\SEGMENT E2\PLAN SHEETS\STRUCTURES\MNHA-TRL\CBRR0687-BRG-DTL-002.dwg By: brian.fleming

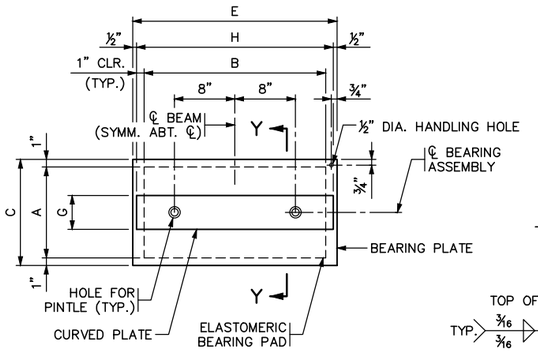

PLAN

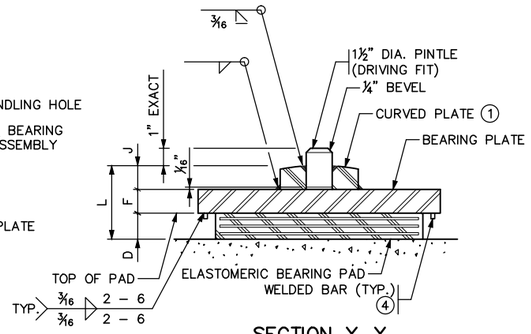

SECTION Y–Y

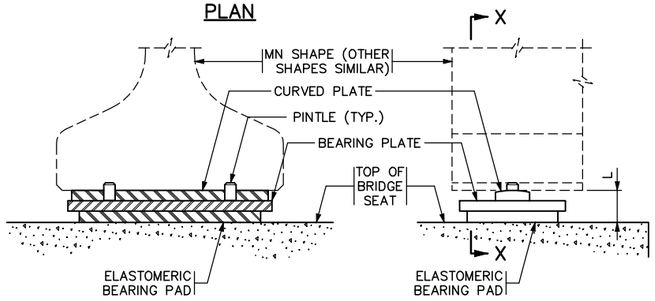

SECTION X–X

SIDE ELEVATION

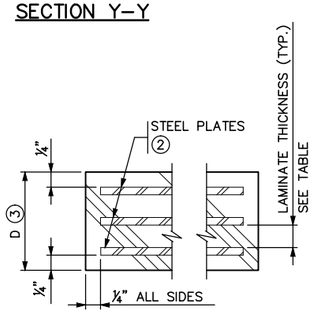

SECTION THROUGH ELASTOMERIC BEARING PAD

TABLE

ASSEMBLY TYPE	LOCATION	BEAM SIZE	BEARING PAD SIZE A	BEARING PAD SIZE B	BEARING PAD SIZE D	STEEL PLATES NO.	STEEL PLATES THICK.	LAMINATES NO.	LAMINATES THICK.	SHAPE FACTOR	BEARING PLATE SIZE C	BEARING PLATE SIZE E	BEARING PLATE SIZE F	CURVED PLATE SIZE G	CURVED PLATE SIZE H	CURVED PLATE SIZE J	ASSY. HEIGHT L	CURVED PLATE R ①
E1	W. ABUT.	36M	12"	24"	1⅞"	3	⅛"	2	½"	8.0	14"	27"	1½"	4½"	26"	1¼"	4⅝"	16"

NOTES:

PROVIDE ELASTOMERIC MATERIALS AND PAD CONSTRUCTION PER SPEC. 3741.

PROVIDE STEEL PLATES PER SPEC. 3306.

PROVIDE PINTLES PER SPEC. 3309.

GALVANIZE STRUCTURAL STEEL BEARING ASSEMBLY AFTER FABRICATION PER SPEC. 3394, EXCEPT AS NOTED.

~~PAYMENT FOR BEARING ASSEMBLY INCLUDES ALL MATERIAL ON THIS DETAIL.~~

① THE MIN. RADIUS IS 16" UNLESS OTHERWISE SPECIFIED IN THE TABLE. THE MAX. RADIUS IS 24". FINISH TO 250 MICRO. THE FINISHED THICKNESS OF THE PLATE MAY BE 1⁄16" LESS THAN SHOWN.

② DO NOT GALVANIZE THESE PLATES.

③ THE TOTAL THICKNESS SHOWN INCLUDES THE STEEL PLATES.

④ ⅜" X ⅜" BAR INSTALLED ON BEARING PLATE AROUND PERIMETER OF BEARING PAD. BAR LENGTH IS 2" LESS THAN ADJACENT PAD DIMENSION, CENTERED ON PAD. CENTERLINE OF BAR TO EDGE OF PAD DIMENSION = ½".

DESIGN DATA:

MAXIMUM HORIZONTAL LOAD IS 70 KIPS FOR 1½" PINTLES.

APPROVED: SEPTEMBER 22, 2011	STATE OF MINNESOTA DEPARTMENT OF TRANSPORTATION	REVISED 11–03–2015	DETAIL NO.
Nancy Daubenberger STATE BRIDGE ENGINEER	CURVED PLATE BEARING ASSEMBLY (PRESTRESSED CONCRETE BEAMS) (EXPANSION)		B311

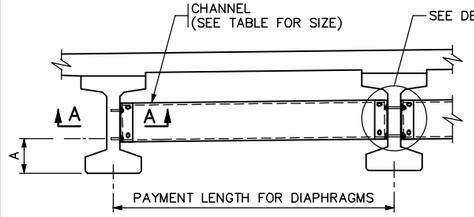

PART TRANSVERSE SECTION AT DIAPHRAGM

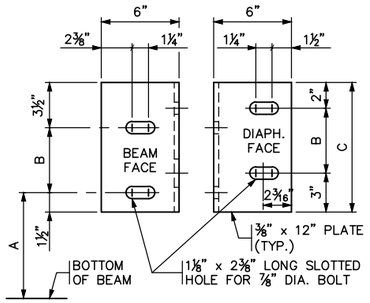

DIAPHRAGM CONNECTION

FOR 36M ~~AND MN45~~ BEAMS

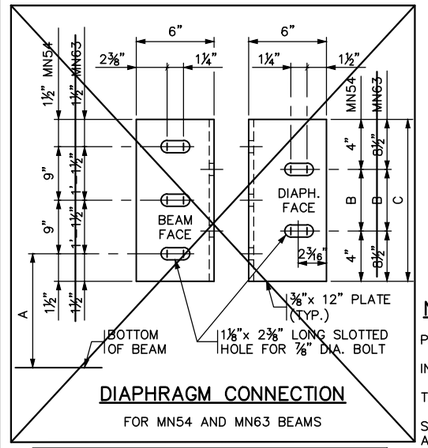

DIAPHRAGM CONNECTION

FOR MN54 AND MN63 BEAMS

TABLE

BEAM HEIGHT	DISTANCE A	DISTANCE B	DISTANCE C	CHANNEL SIZE
36M	1'–3"	7"	1'–0"	C12x20.7
~~MN45~~	~~1'–7¾"~~	~~7"~~	~~1' 0"~~	~~C12x20.7~~
~~MN54~~	~~1'–7¾"~~	~~1' 1"~~	~~1' 9"~~	~~MC18x42.7~~
~~MN63~~	~~1'–7¾"~~	~~1' 1"~~	~~2' 6"~~	~~MC18x42.7~~

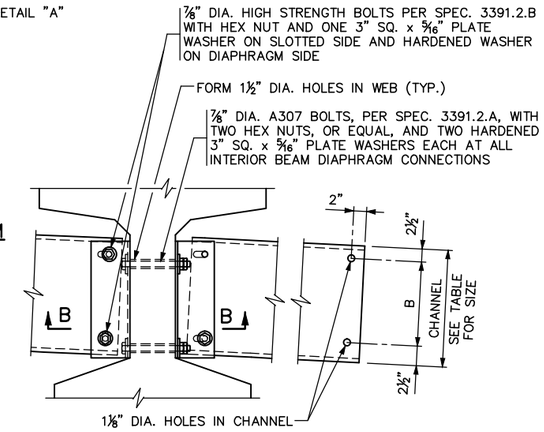

DETAIL "A"

INTERIOR BEAM WITH CONTINUOUS LINE OF DIAPHRAGMS

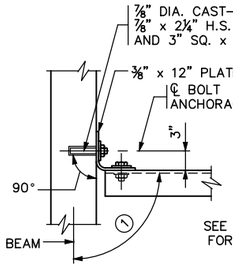

SECTION A–A

TYPICAL SECTION AT ALL FASCIA BEAMS

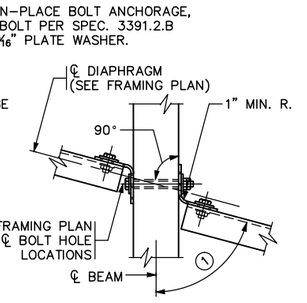

SECTION B–B

TYPICAL SECTION AT INTERIOR BEAM WITH CONTINUOUS OR STAGGERED INTERMEDIATE DIAPHRAGMS

NOTES:

PROVIDE STEEL PER SPEC. 3306.

INSTALL PER SPEC. 2405.3.K.

TORQUE ALL BOLTS, INCLUDING ANCHOR BOLTS TO 80 FT.–LBS.

SHOP BEND THE LEG OF THE 12" PLATE TO CONFORM TO THE DIAPHRAGM. A ⅜" x 6" x 6" ANGLE MAY BE USED FOR DIAPHRAGMS PERPENDICULAR TO BEAMS.

~~INCLUDE ALL STRUCTURAL STEEL SHOWN ON THIS DETAIL, INCLUDING BOLTS AND WASHERS, IN UNIT PRICE BID FOR DIAPHRAGMS FOR PRESTRESSED BEAMS.~~

BENT PLATES MAY BE USED IN PLACE OF CHANNELS. THE BENT PLATES MUST BE THE SAME HEIGHT AS THE CHANNELS THEY REPLACE, BE 5⁄16" IN THICKNESS, AND HAVE LEGS 5" LONG.

GALVANIZE STEEL PLATES AND SHAPES PER SPEC. 3394.

GALVANIZE BOLTS, NUTS AND WASHERS PER SPEC. 3392.

① FOR SKEW ANGLES UNDER 20°, USE 90° LESS THE SKEW ANGLE. FOR SKEW ANGLES OVER 20°, USE 90°.

APPROVED: NOVEMBER 03, 2015	STATE OF MINNESOTA DEPARTMENT OF TRANSPORTATION		DETAIL NO.
Beverly A. J. Farnaker STATE BRIDGE ENGINEER	STEEL INTERMEDIATE DIAPHRAGM (FOR 36M, MN45 – MN63 PRESTRESSED CONCRETE BEAMS)		B403

NO.	DATE	BY	CHECK	DESIGN	REVISION / SUBMITTAL

DESIGNED BY: BAW CHECKED BY: BLF

DRAWN BY: NAO CHECKED BY: BLF

AECOM Kimley»Horn

METROPOLITAN COUNCIL

SOUTHWEST Green Line LRT Extension

CIVIL - VOLUME 4D
MINNEHAHA CREEK TRAIL BRIDGE
BRIDGE R0687
BRIDGE DETAILS 3

DISCIPLINE: STRUCTURES

SHEET NAME: CBRR0687-BRG-DTL-002-3

SHEET 35 OF 46

Dec, 10 2015 08:14 am V:\3400_ADC\CAD\SEGMENT E2\PLAN SHEETS\STRUCTURES\MNHA-TRL\CBRR0687-BRG-DTL-002.dwg By: brian.fleming

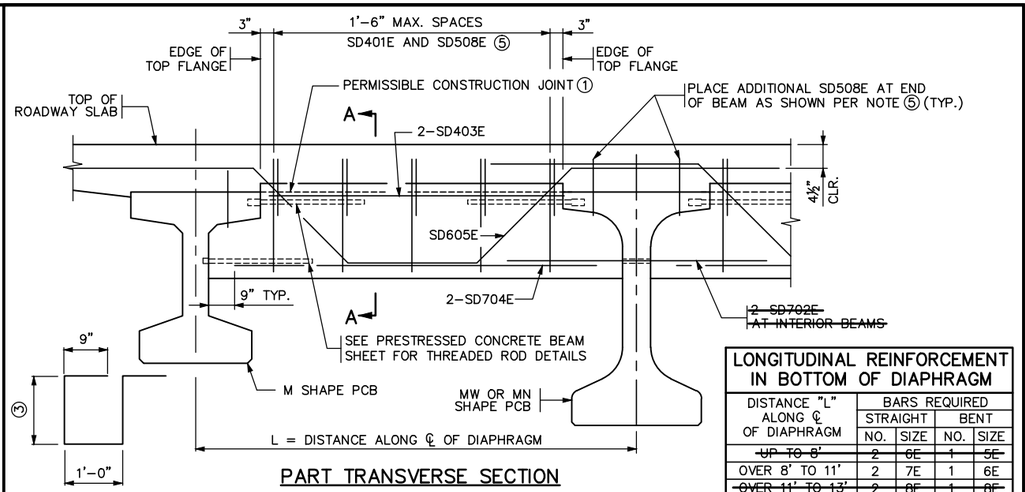

PART TRANSVERSE SECTION

(L > 8' SHOWN)

SD401E

LONGITUDINAL REINFORCEMENT IN BOTTOM OF DIAPHRAGM				
DISTANCE "L" ALONG ℄ OF DIAPHRAGM	BARS REQUIRED			
	STRAIGHT		BENT	
	NO.	SIZE	NO.	SIZE
~~UP TO 8'~~	~~2~~	~~6E~~	~~1~~	~~5E~~
OVER 8' TO 11'	2	7E	1	6E
~~OVER 11' TO 13'~~	~~2~~	~~8E~~	~~1~~	~~8E~~
~~OVER 13' TO 15'~~	~~2~~	~~9E~~	~~1~~	~~10E~~
~~OVER 15' TO 18'~~	~~2~~	~~11E~~	~~1~~	~~11E~~

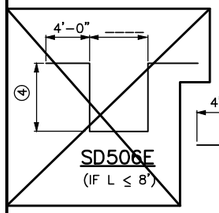

SD506E

(IF L ≤ 8')

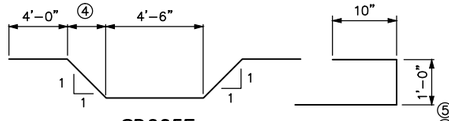

SD605E

(IF L > 8')

SD508E ⑤

BILL OF REINFORCEMENT FOR END DIAPHRAGM				
BAR	NO.	LENGTH	SHAPE	LOCATION
SD401E	12	6'–2"		VERTICAL TIE
~~SD702E~~		~~5' 6"~~		~~LONG. THRU BEAM~~
SD403E	4	7'–8"		LONG. TOP
SD704E	4	8'–6"		LONG. BOTTOM
SD605E	2	16'–2"		LONGITUDINAL
~~SD506E~~				~~LONGITUDINAL~~
⑤ SD507E				LONGITUDINAL
⑤ SD508E				VERTICAL TIE

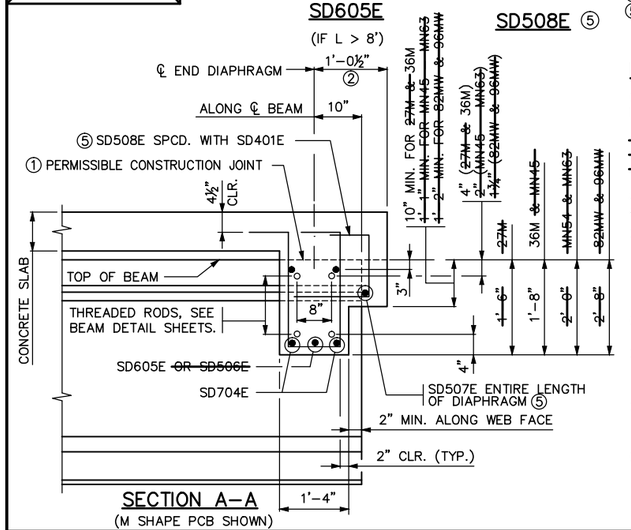

SECTION A–A

(M SHAPE PCB SHOWN)

1'–4"

NOTES:

CONCRETE FOR END DIAPHRAGMS SHALL BE THE SAME MIX AS USED IN DECK.

~~QUANTITIES FOR END DIAPHRAGM CONCRETE AND REINFORCEMENT SHOWN ON THIS DETAIL SHALL BE LISTED IN SUPERSTRUCTURE QUANTITIES.~~

~~THREADED RODS ARE INCIDENTAL TO PRESTRESSED CONCRETE BEAMS.~~

① USE OF CONSTRUCTION JOINT REQUIRES CLEARANCE FOR EXPANSION DEVICE. WHEN CONSTRUCTION JOINT IS USED AT THIS LOCATION, DIAPHRAGM FALSEWORK SHALL REMAIN INPLACE UNTIL COMPLETION OF SLAB CURING PERIOD.

② PERPENDICULAR TO CENTERLINE OF DIAPHRAGM.

③ ~~1' 11" (27M); 2' 1"~~ 1'–10" (36M ~~AND MN45~~), ~~2' 6" (MN54 AND MN63); 3' 1" (82MW AND 96MW)~~. BASED ON 3" STOOL AND ~~9"~~ 7" DECK.

④ ~~1' 10" (27M)~~; 1'–10" (36M ~~AND MN45~~), ~~2' 4" (MN54 AND MN63); 3' 0" (82MW AND 96MW)~~. BASED ON NOTE ③.

⑤ ADD SD507E AND SD508E ONLY IF NO. OF BARS AND LENGTHS ARE INCLUDED IN BILL OF REINFORCEMENT. SPACE SD508E AT 1'–6" MAX. FOR ENTIRE LENGTH OF DIAPHRAGM. REFER TO "PART TRANSVERSE SECTION" ABOVE.

APPROVED: SEPTEMBER 22, 2011	STATE OF MINNESOTA DEPARTMENT OF TRANSPORTATION	REVISED 04–17–2013 11–06–2013	DETAIL NO.
Nancy Daubenberger STATE BRIDGE ENGINEER	CONCRETE END DIAPHRAGM (27M & 36M, MN45 – MN63, 82MW & 96MW PRESTRESSED CONCRETE BEAMS) (PARAPET ABUTMENT)		B814 (MOD.)

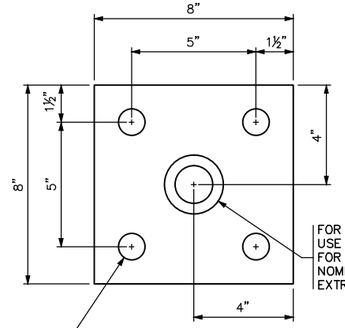

PLAN VIEW – TYPE A

ESTIMATED WEIGHT = 12 OR 14 LBS.

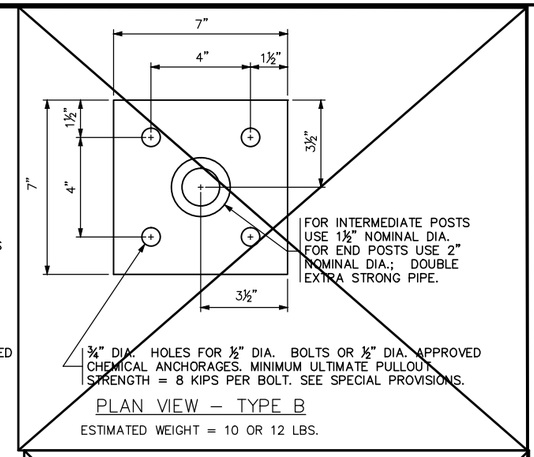

PLAN VIEW – TYPE B

ESTIMATED WEIGHT = 10 OR 12 LBS.

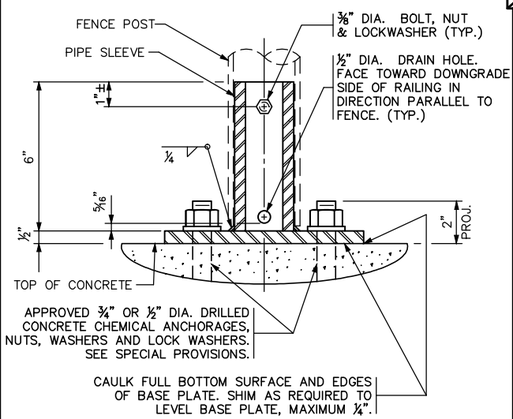

TYPICAL SECTION

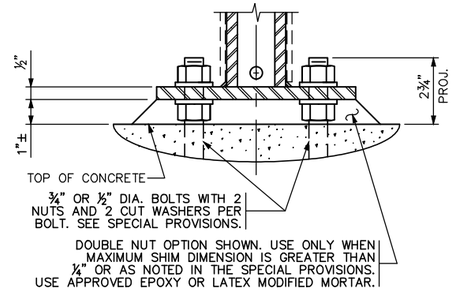

GROUT ALTERNATE

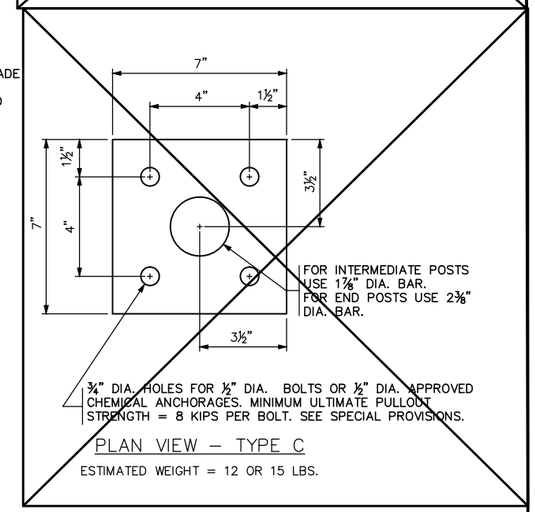

PLAN VIEW – TYPE C

ESTIMATED WEIGHT = 12 OR 15 LBS.

NOTES:

STRUCTURAL STEEL PER Mn/DOT SPEC. 3306

STRUCTURAL PIPE PER Mn/DOT SPEC. 3362

GALVANIZE THE FENCE POST ANCHORAGE AFTER FABRICATION PER Mn/DOT SPEC. 3394. GALVANIZE THE FASTENERS PER Mn/DOT SPEC. 3392.

DOUBLE EXTRA STRONG PIPE WEIGHTS:
1½" NOMINAL DIA. = 6.41 LBS./FT.
2" NOMINAL DIA. = 9.03 LBS./FT.

APPROVED: NOVEMBER 22, 2002	STATE OF MINNESOTA DEPARTMENT OF TRANSPORTATION	REVISION	DETAIL NO.
Daniel J. Warzyn STATE BRIDGE ENGINEER	FENCE POST ANCHORAGE		B905

NO.	DATE	BY	CHECK	DESIGN	REVISION / SUBMITTAL

DESIGNED BY: BAW CHECKED BY: BLF

DRAWN BY: NAO CHECKED BY: BLF

AECOM Kimley»Horn

90% SUBMISSION - 01/22/16

METROPOLITAN COUNCIL

SOUTHWEST Green Line LRT Extension

CIVIL - VOLUME 4D
MINNEHAHA CREEK TRAIL BRIDGE
BRIDGE R0687
BRIDGE DETAILS 4

DISCIPLINE: STRUCTURES

SHEET NAME: CBRR0687-BRG-DTL-002-4

SHEET 36 OF 46

Dec. 10 2015 08:14 am V:\3400_ADC\CAD\SEGMENT E2\PLAN SHEETS\STRUCTURES\MNHA-TRL\CBRR0687-BRG-DTL-002.dwg By: brian.fleming

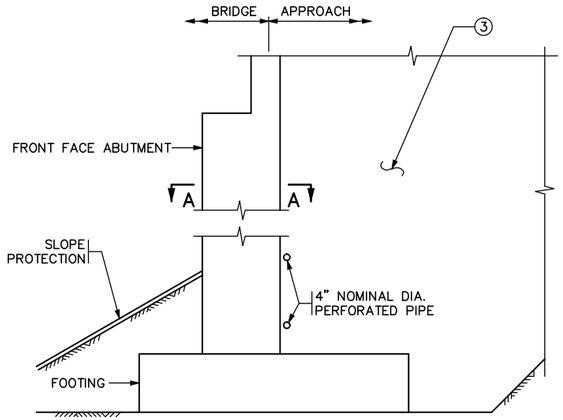

SECTION THROUGH PARAPET AND SEMI-INTEGRAL ABUTMENTS

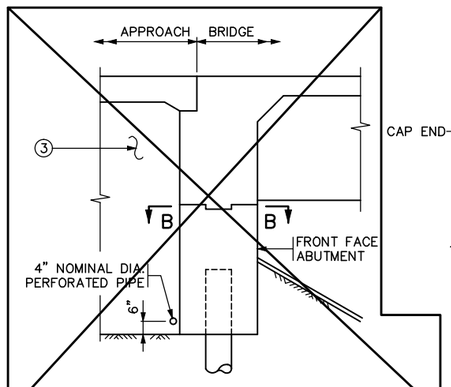

SECTION THROUGH INTEGRAL ABUTMENT

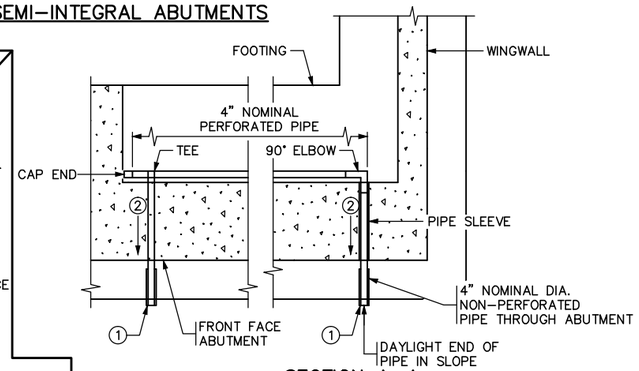

SECTION A-A

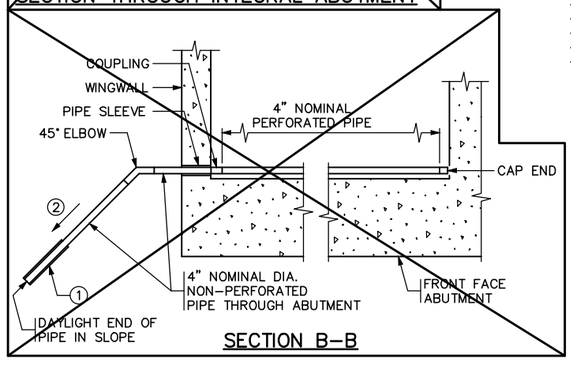

SECTION B-B

NOTES:

~~PAYMENT WILL BE INCLUDED IN THE SINGLE LUMP SUM PRICE FOR "DRAINAGE SYSTEM TYPE (B910)", INCLUDES BUT IS NOT LIMITED TO 4" DIAMETER PERFORATED AND NON-PERFORATED PIPE, ELBOWS, END CAPS, COUPLINGS, SLEEVES AND PRECAST CONCRETE HEADWALLS.~~

ALL PIPE TO COMPLY WITH SPEC. 3245.

WRAP PERFORATED PIPE WITH GEOTEXTILE PER SPEC. 3733, TYPE 1. ATTACH TO PIPE PER SPEC. 2502.

1. AT CONTRACTORS OPTION, MAY TIE APPROACH PANEL DRAINAGE SYSTEM AND ABUTMENT DRAINAGE SYSTEM INTO A SINGLE PRECAST CONCRETE HEADWALL OR INTO A CATCH BASIN AS LONG AS A MINIMUM OF 1% POSITIVE SLOPE CAN BE MANTAINED.

   USE PRECAST CONCRETE HEADWALL WITH RODENT SCREEN. SEE STANDARD PLATE 3131 FOR DETAILS.

2. ⅛" PER FT. MINIMUM SLOPE.

3. REFER TO SHEET 2 FOR ABUTMENT BACKFILL REQUIREMENTS.

APPROVED: JANUARY 13, 2015	STATE OF MINNESOTA DEPARTMENT OF TRANSPORTATION	REVISED	DETAIL NO.
Nancy Daubenberger STATE BRIDGE ENGINEER	DRAINAGE SYSTEM		B910 (MOD.)

NO.	DATE	BY	CHECK	DESIGN	REVISION / SUBMITTAL

DESIGNED BY: BAW CHECKED BY: BLF
DRAWN BY: RHK CHECKED BY: BLF

AECOM Kimley»Horn

90% SUBMISSION - 01/22/16

METROPOLITAN COUNCIL

SOUTHWEST Green Line LRT Extension

CIVIL - VOLUME 4D
MINNEHAHA CREEK TRAIL BRIDGE
BRIDGE R0687
BRIDGE DETAILS 5

DISCIPLINE: STRUCTURES
SHEET NAME: CBRR0687-BRG-DTL-002-5

SHEET 37 OF 46

Dec, 10 2015 08:14 am V:\3400_ADC\CAD\SEGMENT E2\PLAN SHEETS\STRUCTURES\MNHA-TRL\CBRR0687-BRG-DTL-002.dwg By: brian.fleming

CONCRETE WEARING COURSE

☐ LOW SLUMP

☐ OTHER _____
TYPE OR MANUFACTURER

EXPANSION JOINTS

JOINT MANUFACTURER

MANUFACTURER'S IDENTIFICATION _____
MFR'S No. AND/OR LETTER DESIGNATION FOR JOINT USED

GLAND MANUFACTURER _____
NAME AND ADDRESS (CITY, STATE)

SIZE OF GLAND _____

MANUFACTURER'S IDENTIFICATION _____
MFR'S No. AND/OR LETTER DESIGNATION FOR GLAND USED

ELASTOMERIC BEARING PADS

PAD MANUFACTURER _____
NAME AND ADDRESS (CITY, STATE)

SPECIAL SURFACE FINISH

SYSTEM: _____ COLOR: _____

FINISHING ROADWAY FACES OF BARRIER RAILING

TYPE: _____ COLOR: _____

ANTI-GRAFFITI COATING

MANUFACTURER _____
NAME AND ADDRESS (CITY, STATE)

PRODUCT NAME: _____ LOCATION: _____

PAINT SYSTEM

Mn/DOT SPECIFICATION NUMBER _____
2478 OR 2479 OR OTHER

MANUFACTURER _____
NAME AND ADDRESS (CITY, STATE)

PRIME COAT _____
Mn/DOT MATERIAL SPECIFICATION NUMBER

INTERMEDIATE COAT _____
Mn/DOT MATERIAL SPECIFICATION NUMBER

FINISH COAT _____ _____
Mn/DOT MATERIAL SPECIFICATION NUMBER COLOR

PLAN QUALITY

RATE 1 (AGREE), 2 (NEUTRAL), OR 3 (DISAGREE, PLEASE COMMENT BELOW)

DIMENSIONING AND DETAILING ADEQUATELY DESCRIBED REQUIRED CONSTRUCTION. _____
BAR LISTS AND QUANTITIES WERE TYPICALLY COMPLETE AND FREE OF ERRORS. _____
SCALE OF DRAWINGS AND OVERALL LEGIBILITY OF LINES AND TEXT WAS GOOD. _____
(SB) SPECIAL PROVISIONS ADEQUATELY DESCRIBED SPECIAL WORK AND PAYMENT. _____

COMMENTS: _____

NUMBER OF BRIDGE SUPPLEMENTAL AGREEMENTS: _____ COST: $ _____

LIST SIGNIFICANT ERRORS OR OMISSIONS IN PLAN DETAILS OR PAY QUANTITIES IN THE SPACE PROVIDED AT RIGHT.

BRIDGE REMOVAL / BRIDGE OPENING

NUMBER OF AND DATE OLD BRIDGE WAS REMOVED (IF APPLICABLE):

BRIDGE NUMBER _____ DATE REMOVED _____

DATE NEW BRIDGE WAS OPENED TO TRAFFIC _____

NOTIFY THE BRIDGE OFFICE BRIDGE MANAGEMENT UNIT WITH THIS INFORMATION AS SOON AS POSSIBLE. (651) 366-4557

OTHER ITEMS ①

① UTILITIES ADDED DURING CONSTRUCTION AND SPECIALTY ITEMS.

FINAL QUANTITIES ENTERED ON SCHEDULE OF QUANTITIES: YES ☐ NO ☐

SUMMARY OF SIGNIFICANT AS-BUILT CHANGES

THE AS-BUILT INFORMATION WAS ADDED TO THE PLAN BY:

_____ _____
INSPECTOR(S) SIGNATURE DATE

CHECKED BY: _____ _____
PROJECT ENGINEER/SUPERVISOR SIGNATURE DATE

AT THE TIME OF THE FINAL, THIS COMPLETED AS-BUILT BRIDGE DATA SHEET MUST BE SUBMITTED TO THE BRIDGE OFFICE – ATTN: REGIONAL CONSTRUCTION ENGINEER (MS610).

REVISION: 10-28-2008

APPROVED: SEPTEMBER 26, 2003

Daniel L. Dorgan
STATE BRIDGE ENGINEER

AS-BUILT DETAILS

(AS NEEDED)

FIG. 5-397.900

TITLE: AS-BUILT BRIDGE DATA	DES:	DR:	APPROVED:	BRIDGE NO. R0687
	CHK:	CHK:		
	SHEET NO. 38 OF 46 SHEETS			

Dec, 10 2015 08:14 am V:\3400_ADC\CAD\SEGMENT E2\PLAN SHEETS\STRUCTURES\MNHA-TRL\CBRR0687-BRG-DTL-004.dwg By: brian.fleming

CONTRACTED PROFILE

SCALE HOR: 0 50'

SCALE VER: 0 10'

PROFILE GRADE CEDAR LAKE TRAIL (CEDAR LAKE LRT REGIONAL TRAIL)

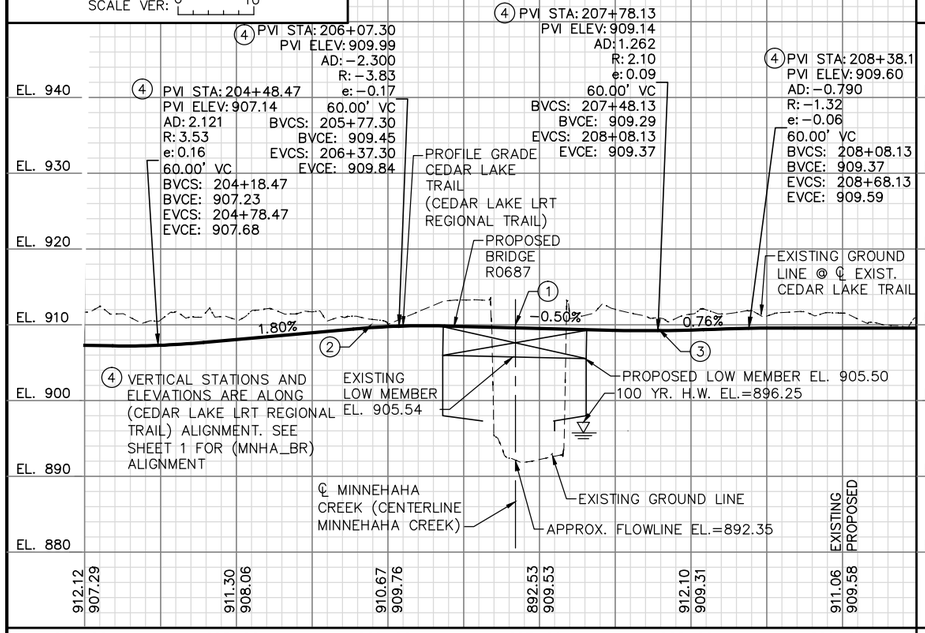

CONTRACTED PROFILE

SCALE HOR: 0 50'

SCALE VER: 0 10'

PROFILE GRADE MINNEHAHA CREEK (CENTERLINE MINNEHAHA CREEK)

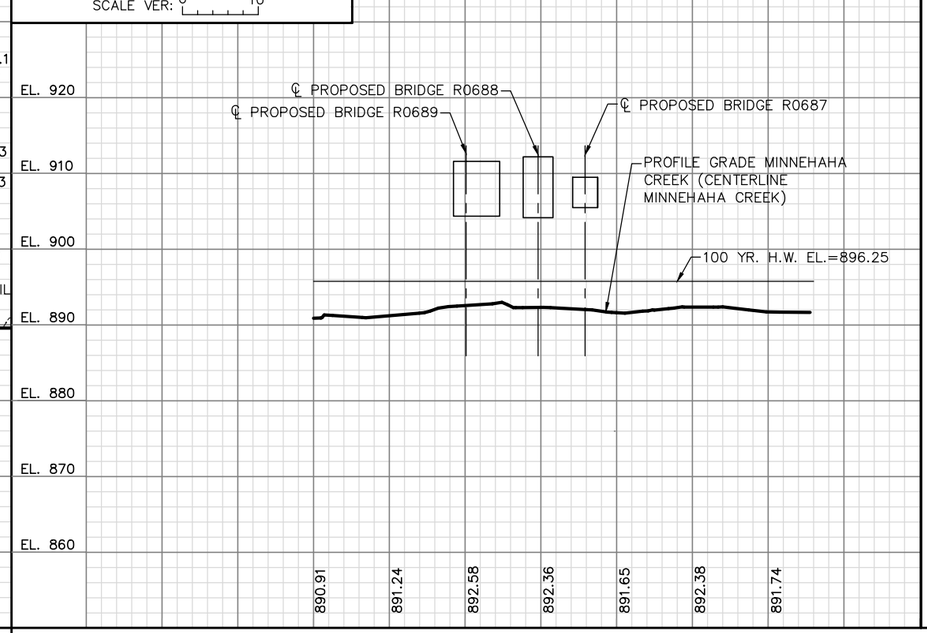

PLAT

SCALE: 0 50'

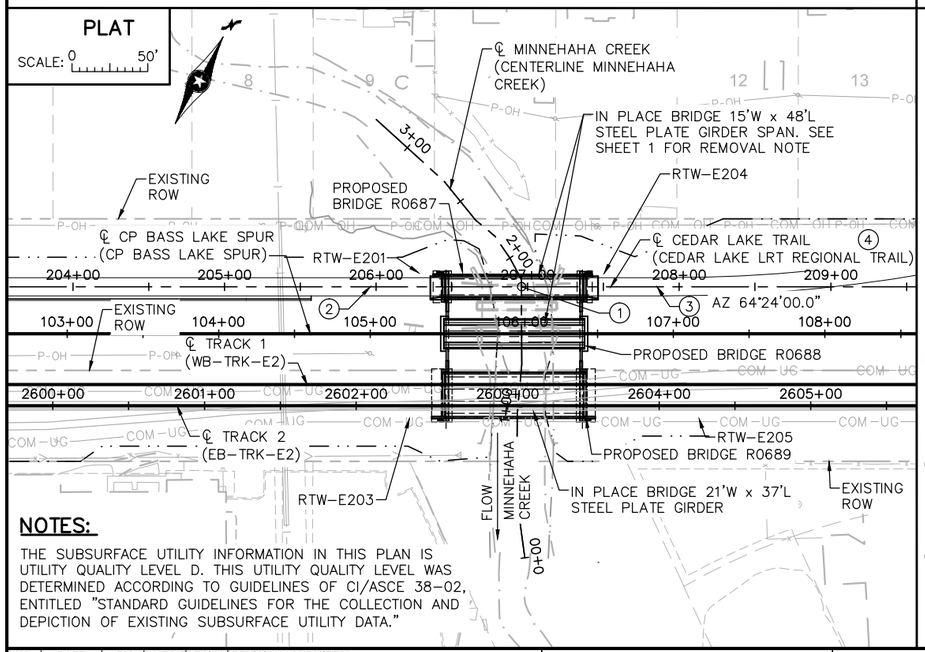

NOTES:

THE SUBSURFACE UTILITY INFORMATION IN THIS PLAN IS UTILITY QUALITY LEVEL D. THIS UTILITY QUALITY LEVEL WAS DETERMINED ACCORDING TO GUIDELINES OF CI/ASCE 38−02, ENTITLED "STANDARD GUIDELINES FOR THE COLLECTION AND DEPICTION OF EXISTING SUBSURFACE UTILITY DATA."

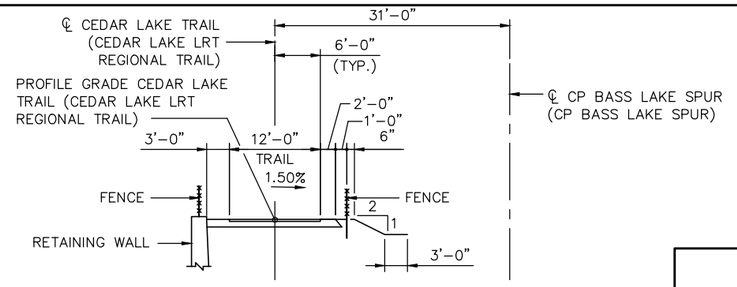

PROPOSED TYPICAL CEDAR LAKE TRAIL SECTION MINNEHAHA CREEK

NOTES:

① ℄ CONTROL POINT
℄ CEDAR LAKE TRAIL (MNHA_BR)
STA. 10+99.75 =
℄ MINNEHAHA CREEK (CENTERLINE MINNEHAHA CREEK) STA. 1+79.18
X = 501332.876, Y = 150948.820

② ℄ CEDAR LAKE TRAIL (CEDAR LAKE LRT REGIONAL TRAIL)
STA. 205+96.17 =
℄ CEDAR LAKE TRAIL (MNHA_BR) STA. 10+00.00
X = 501242.916, Y = 150905.718

③ ℄ CEDAR LAKE TRAIL (MNHA_BR)
STA. 11+90.00 =
℄ CEDAR LAKE TRAIL (CEDAR LAKE LRT REGIONAL TRAIL)
STA. 207+86.17
X = 501414.264, Y = 150987.815

INDEX MAP
(2.5 SQUARE MILES)

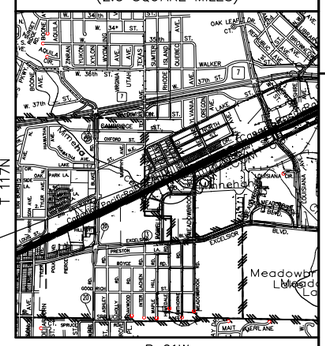

LOCATION ENGINEER'S OBSERVATIONS AT BRIDGE SITE

1. SPECIAL FEATURES: WATERFALLS, DAMS, FLOODS, ICE, DEBRIS SLIDING BANKS, RECREATIONAL BOATING.
2. OTHER BRIDGES OR CULVERTS OVER THE SAME STREAM (PARTICULARY STRUCTURES WHICH CARRY HIGH WATER WITHOUT OVERFLOW OF ROADWAY): GIVEN LOCATION, TYPE, LENGTH, HEIGHT ABOVE HIGH WATER, CROSS−SECTIONAL AREA ETC.
3. APPARENT HIGHWATER ELEVATION OBTAINED FROM:
4. OTHER DATA: APPROX. VELOCITY OF WATER AT TIME OF SURVEY.

HYDRAULIC ENGINEER'S RECOMMENDATION

DATE: DECEMBER 2015

STREAM OR DITCH DESIGNATION: MINNEHAHA CREEK

DRAINAGE AREA: 138 SQ. MI.

MAX FLOOD ON RECORD: UNKNOWN

DESIGN FLOOD (100 YR. FREQ.): 865 C.F.S.
HEADWATER ELEVATION: 896.25 FT.
DESIGN MEAN VELOCITY THROUGH STRUCTURE 5.54 F.P.S.
TOTAL STAGE INCREASE 0.0 FT.
LOW MEMBER AT OR ABOVE ELEVATION 898.50 FT.

WATERWAY AREA REQUIRED BELOW ELEV. 896.25 = 156.24 SQ. FT. AT RIGHT ANGLES TO CHANNEL

BASIC FLOOD (100 YR. FREQ.) 865 C.F.S.
HEADWATER ELEVATION: 896.25 FT.
TOTAL STAGE INCREASE 0.0 FT.
MEAN VELOCITY THROUGH STRUCTURE 5.54 F.P.S.

FLOWLINE ELEVATION: 892.35 FT. SKEW ANGLE: 0 DEG.

ESTIMATED PRELIMINARY TOTAL SCOUR AT ABUT. EL. 888.67 (500 YR. FREQ.)

SCOUR CONFIRMATION RECOMMENDATION

DATE: DECEMBER 2015

TOTAL SCOUR AT ABUT. EL. 888.67 (500 YR. FREQ.)

SCOUR CODE: L

BRIDGE SURVEY SHEETS MADE FROM 2014 MFRA SURVEYS

1ST BENCH MARK (NAVD88)
ELEVATION: 913.20
NORTHING: 150917.04
EASTING: 501306.42
DESCRIPTION: MAG NAIL IN BIT.

2ND BENCH MARK (NAVD88)
ELEVATION: 912.78
NORTHING: 150966.60
EASTING: 501408.21
DESCRIPTION: MAG NAIL IN BIT.

BRIDGE SURVEY

CEDAR LAKE TRAIL OVER MINNEHAHA CREEK
TRAIL BRIDGE
1.7 MI. S.W. OF JCT. T.H. 7 & T.H. 100
IN ST. LOUIS PARK

SEC 20 T 117N R 21W

CITY OF ST. LOUIS PARK HENNEPIN COUNTY

BRIDGE R0687

NO.	DATE	BY	CHECK	DESIGN	REVISION / SUBMITTAL

DESIGNED BY: BAW CHECKED BY: BLF
DRAWN BY: NAO CHECKED BY: BLF

AECOM Kimley»Horn

90% SUBMISSION - 01/22/16

METROPOLITAN COUNCIL

SOUTHWEST Green Line LRT Extension

CIVIL - VOLUME 4D
MINNEHAHA CREEK TRAIL BRIDGE
BRIDGE R0687
BRIDGE SURVEY

DISCIPLINE: STRUCTURES

SHEET NAME: CBRR0687-BRG-SUR-001

SHEET 39 OF 46

Dec, 10 2015 08:18 am V:\3400_ADC\CAD\SEGMENT E2\PLAN SHEETS\STRUCTURES\MNHA−TRL\CBRR0687−BRG−SUR−001.dwg By: brian.fleming

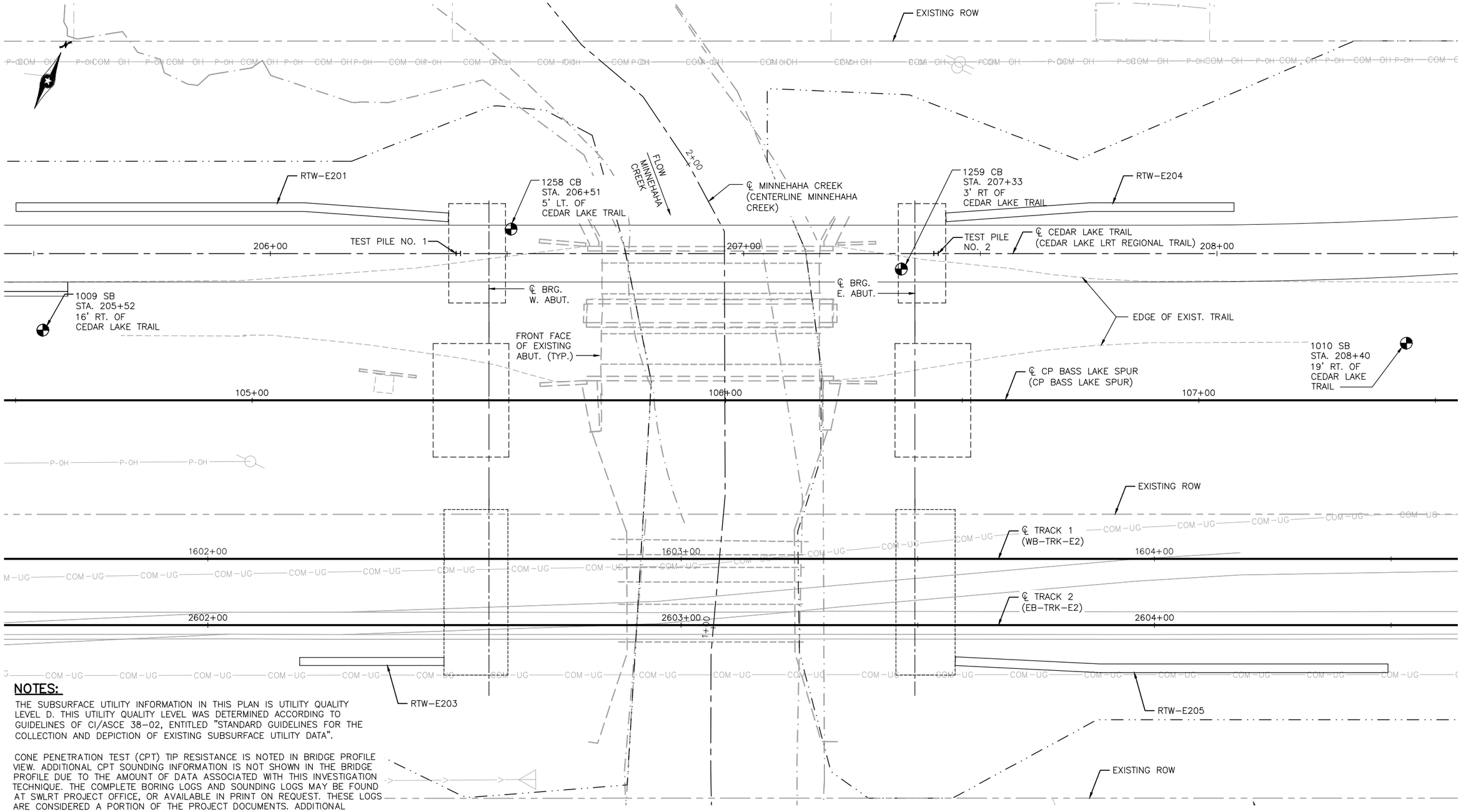

NOTES:

THE SUBSURFACE UTILITY INFORMATION IN THIS PLAN IS UTILITY QUALITY LEVEL D. THIS UTILITY QUALITY LEVEL WAS DETERMINED ACCORDING TO GUIDELINES OF CI/ASCE 38–02, ENTITLED "STANDARD GUIDELINES FOR THE COLLECTION AND DEPICTION OF EXISTING SUBSURFACE UTILITY DATA".

CONE PENETRATION TEST (CPT) TIP RESISTANCE IS NOTED IN BRIDGE PROFILE VIEW. ADDITIONAL CPT SOUNDING INFORMATION IS NOT SHOWN IN THE BRIDGE PROFILE DUE TO THE AMOUNT OF DATA ASSOCIATED WITH THIS INVESTIGATION TECHNIQUE. THE COMPLETE BORING LOGS AND SOUNDING LOGS MAY BE FOUND AT SWLRT PROJECT OFFICE, OR AVAILABLE IN PRINT ON REQUEST. THESE LOGS ARE CONSIDERED A PORTION OF THE PROJECT DOCUMENTS. ADDITIONAL BORINGS CAN BE FOUND IN R0688 & R0689 BRIDGE PLANS.

NO.	DATE	BY	CHECK	DESIGN	REVISION / SUBMITTAL

DESIGNED BY: BAW CHECKED BY: BLF
DRAWN BY: NAO CHECKED BY: BLF

AECOM Kimley»Horn

90% SUBMISSION - 01/22/16

METROPOLITAN COUNCIL

SOUTHWEST Green Line LRT Extension

CIVIL - VOLUME 4D
MINNEHAHA CREEK TRAIL BRIDGE
BRIDGE R0687
BRIDGE SURVEY PLAN

DISCIPLINE: STRUCTURES
SHEET NAME: CBRR0687-BRG-BOR-001

SHEET 40 OF 46

Dec, 10 2015 08:20 am V:\3400_ADC\CAD\SEGMENT E2\PLAN SHEETS\STRUCTURES\MNHA-TRL\CBRR0687-BRG-BOR-001.dwg By: brian.fleming

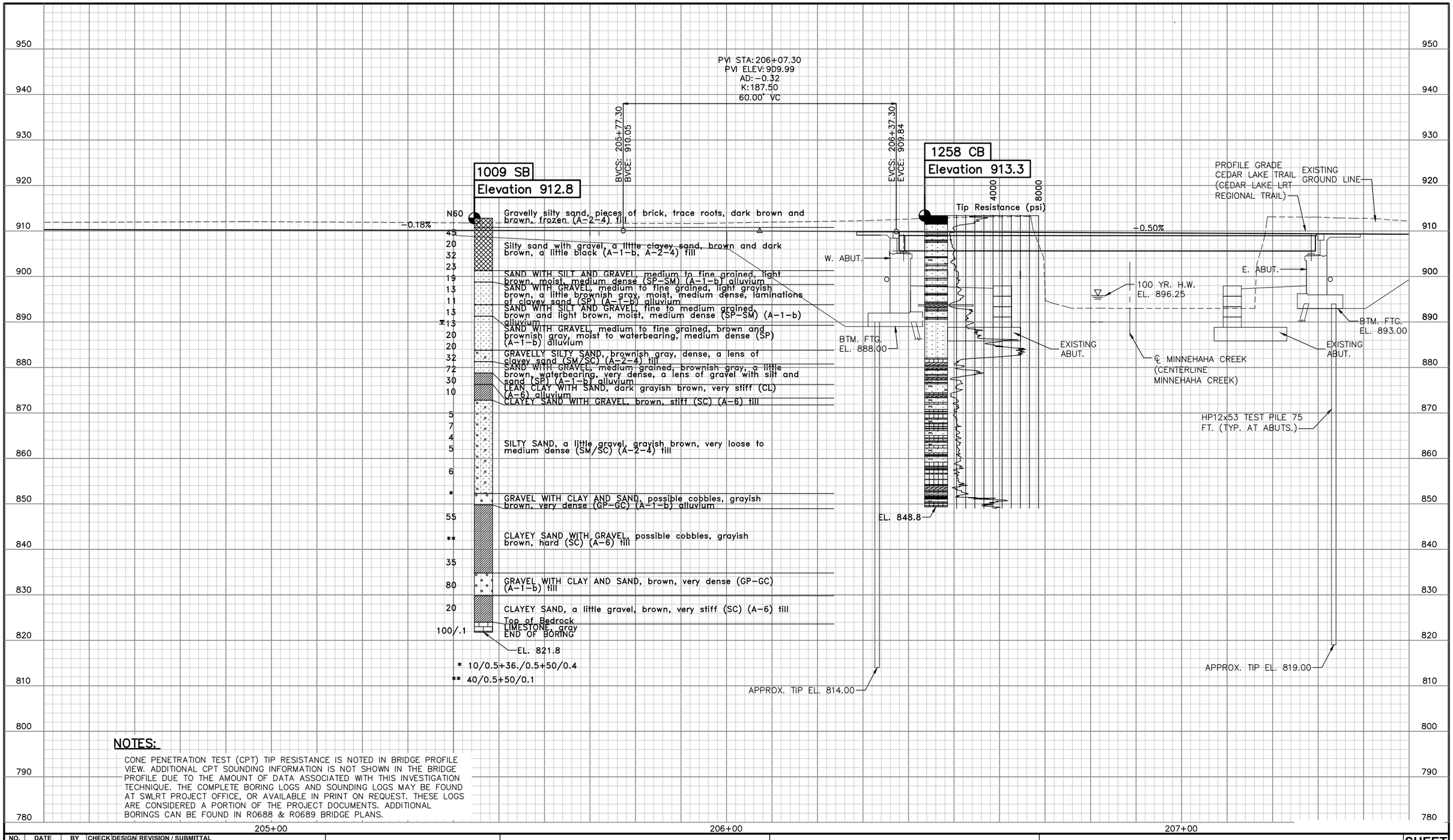

NOTES:

CONE PENETRATION TEST (CPT) TIP RESISTANCE IS NOTED IN BRIDGE PROFILE VIEW. ADDITIONAL CPT SOUNDING INFORMATION IS NOT SHOWN IN THE BRIDGE PROFILE DUE TO THE AMOUNT OF DATA ASSOCIATED WITH THIS INVESTIGATION TECHNIQUE. THE COMPLETE BORING LOGS AND SOUNDING LOGS MAY BE FOUND AT SWLRT PROJECT OFFICE, OR AVAILABLE IN PRINT ON REQUEST. THESE LOGS ARE CONSIDERED A PORTION OF THE PROJECT DOCUMENTS. ADDITIONAL BORINGS CAN BE FOUND IN R0688 & R0689 BRIDGE PLANS.

NO.	DATE	BY	CHECK	DESIGN	REVISION / SUBMITTAL

DESIGNED BY: BAW CHECKED BY: BLF
DRAWN BY: NAO CHECKED BY: BLF

AECOM Kimley»Horn

90% SUBMISSION - 01/22/16

METROPOLITAN COUNCIL

SOUTHWEST Green Line LRT Extension

CIVIL - VOLUME 4D
MINNEHAHA CREEK TRAIL BRIDGE
BRIDGE R0687
BRIDGE SURVEY PROFILE 1

DISCIPLINE: STRUCTURES

SHEET NAME: CBRR0687-BRG-BOR-002-1

SHEET 41 OF 46

Dec, 10 2015 08:21 am V:\3400_ADC\CAD\SEGMENT E2\PLAN SHEETS\STRUCTURES\MNHA-TRL\CBRR0687-BRG-BOR-002.dwg By: brian.fleming

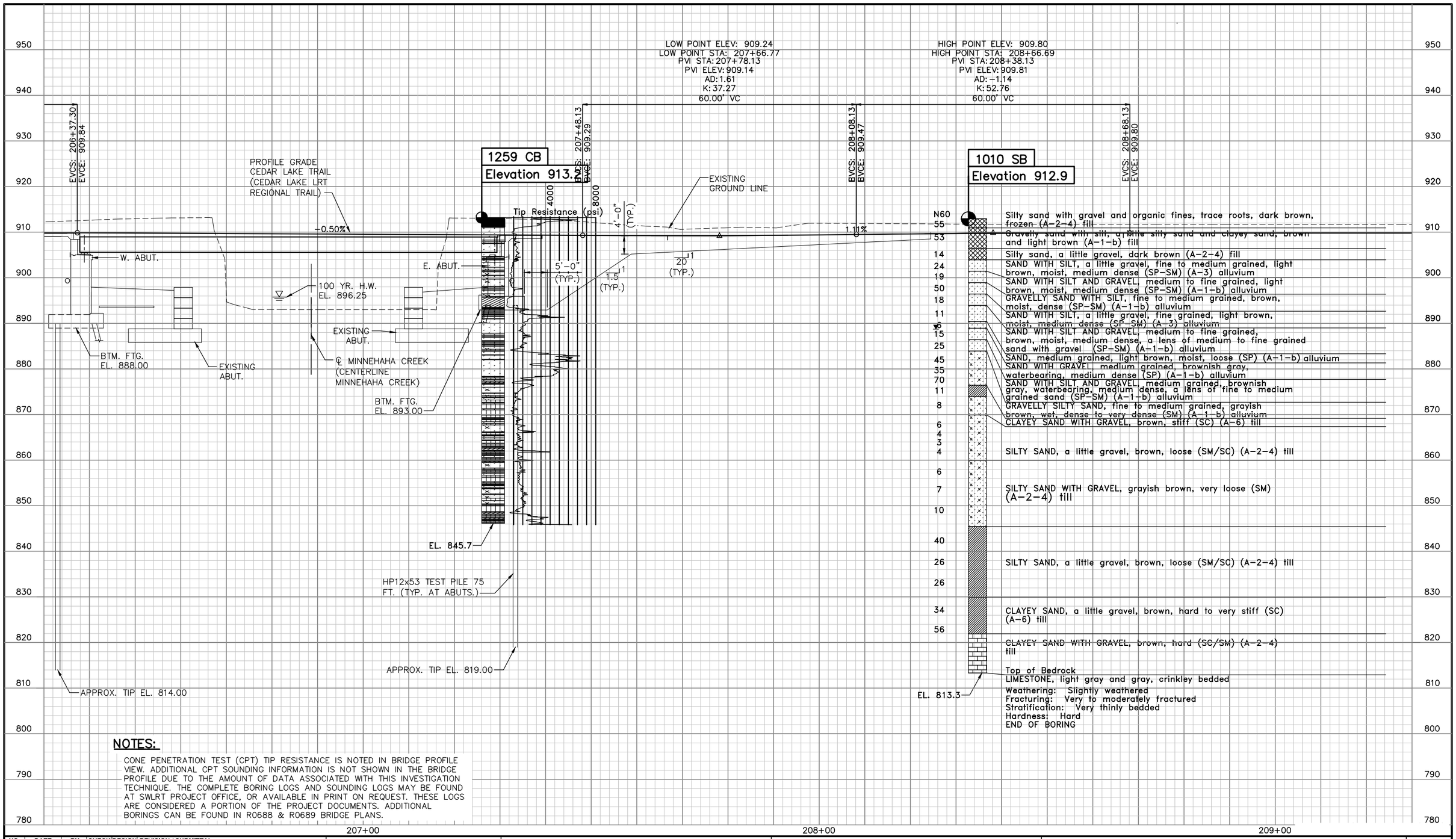

NOTES:

CONE PENETRATION TEST (CPT) TIP RESISTANCE IS NOTED IN BRIDGE PROFILE VIEW. ADDITIONAL CPT SOUNDING INFORMATION IS NOT SHOWN IN THE BRIDGE PROFILE DUE TO THE AMOUNT OF DATA ASSOCIATED WITH THIS INVESTIGATION TECHNIQUE. THE COMPLETE BORING LOGS AND SOUNDING LOGS MAY BE FOUND AT SWLRT PROJECT OFFICE, OR AVAILABLE IN PRINT ON REQUEST. THESE LOGS ARE CONSIDERED A PORTION OF THE PROJECT DOCUMENTS. ADDITIONAL BORINGS CAN BE FOUND IN R0688 & R0689 BRIDGE PLANS.

NO.	DATE	BY	CHECK	DESIGN	REVISION / SUBMITTAL

DESIGNED BY: BAW CHECKED BY: BLF
DRAWN BY: NAO CHECKED BY: BLF

AECOM Kimley»Horn

90% SUBMISSION - 01/22/16

METROPOLITAN COUNCIL

SOUTHWEST Green Line LRT Extension

CIVIL - VOLUME 4D
MINNEHAHA CREEK TRAIL BRIDGE
BRIDGE R0687
BRIDGE SURVEY PROFILE 2

DISCIPLINE: STRUCTURES
SHEET NAME: CBRR0687-BRG-BOR-002-2

SHEET 42 OF 46

Dec, 10 2015 08:21 am V:\3400_ADC\CAD\SEGMENT E2\PLAN SHEETS\STRUCTURES\MNHA-TRL\CBRR0687-BRG-BOR-002.dwg By: brian.fleming

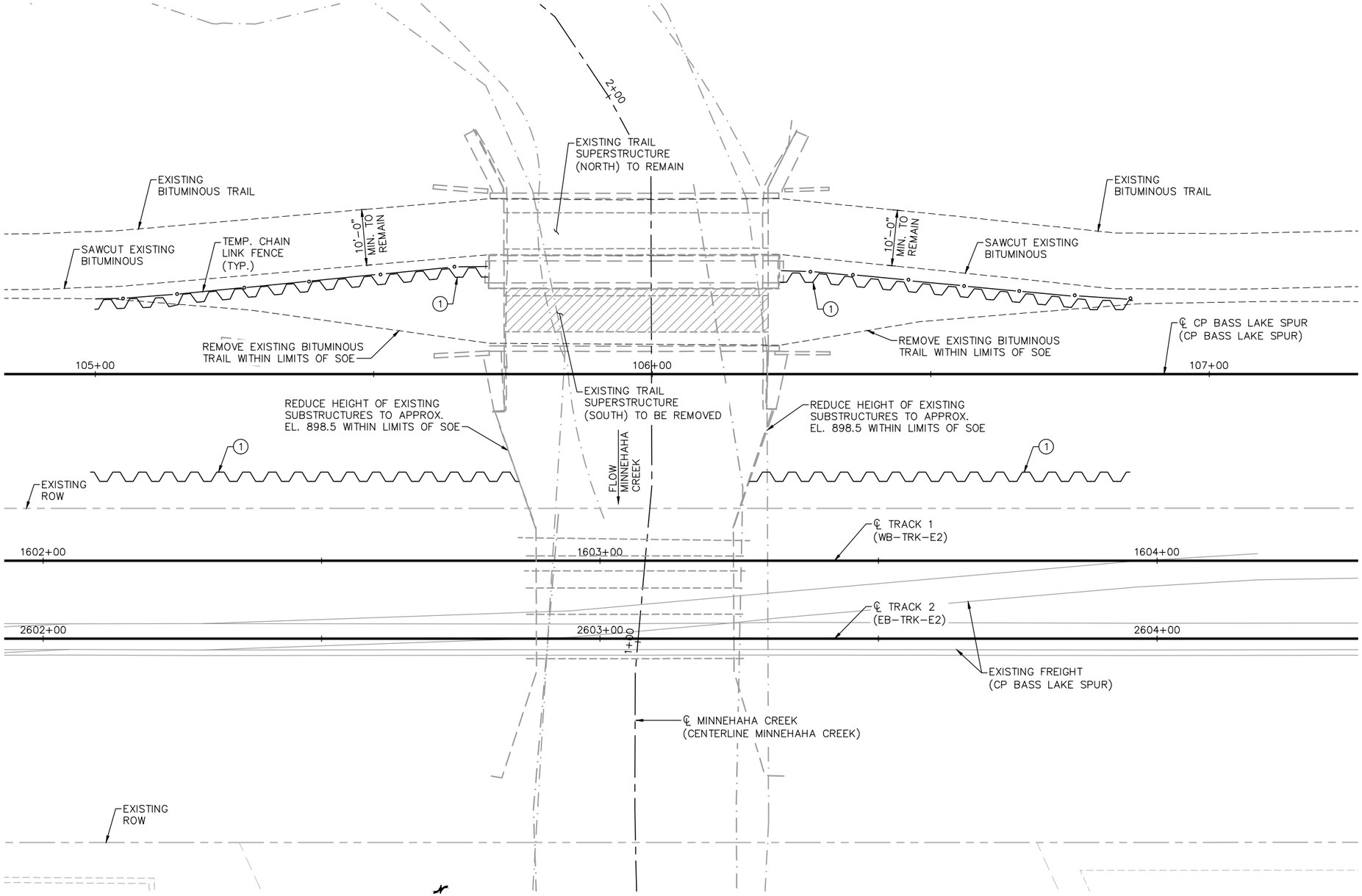

PROPOSED CONSTRUCTION SEQUENCING – STAGE 1

STAGING NOTES:

STAGES 1–4 SHOWN IN THIS PLAN SET, SEE BRIDGE R0689 FOR STAGES 5 & 6.

INSTALL TRAFFIC CONTROL TO DIRECT TRAIL USERS TO THE EXISTING TRAIL SUPERSTRUCTURE. MAINTAIN A 10'–0" MINIMUM CLEAR WIDTH OF EXISTING BITUMINOUS TRAIL WITH 2'–0" CLEAR ZONE ALONG EACH SIDE. PROVIDE TEMPORARY CHAIN LINK FENCE ALONG LENGTH OF THE SOE.

INSTALL SOE FOR CONSTRUCTION OF PROPOSED FREIGHT BRIDGE R0688.

REMOVE EXISTING TRAIL SUPERSTRUCTURE (SOUTH). EXCAVATE FOR CONSTRUCTION OF FREIGHT BRIDGE R0688. EXISTING SUBSTRUCTURES ARE TO REMAIN IN PLACE. REDUCE HEIGHT OF EXISTING SUBSTRUCTURES TO APPROXIMATE ELEVATION 898.5 AS APPROVED BY ENGINEER IN FIELD.

(1) SOE

STAGING REQUIREMENTS:

ALL TRACKS SHALL BE KEPT OPEN FOR TRAIN USE DURING CONSTRUCTION EXCEPT WITH PRIOR APPROVAL. CP SHALL HAVE FINAL AUTHORITY ON PERMITTED TRACK CLOSURES.

CEDAR LAKE TRAIL SHALL BE KEPT OPEN FOR PUBLIC USE DURING CONSTRUCTION EXCEPT WITH PRIOR APPROVAL.

NO.	DATE	BY	CHECK	DESIGN	REVISION / SUBMITTAL

DESIGNED BY: BAW | CHECKED BY: BLF
DRAWN BY: RHK | CHECKED BY: BLF

AECOM Kimley»Horn

90% SUBMISSION - 01/22/16

METROPOLITAN COUNCIL

SOUTHWEST Green Line LRT Extension

CIVIL - VOLUME 4D
MINNEHAHA CREEK TRAIL BRIDGE
BRIDGE R0687
STAGING PLAN 1

DISCIPLINE: STRUCTURES
SHEET NAME: CBRR0687-BRG-STG-001-1

SHEET 43 OF 46

Dec, 10 2015 08:23 am v:\3400_ADC\CAD\SEGMENT E2\PLAN SHEETS\STRUCTURES\MNHA-TRL\CBRR0687-BRG-STG-001.dwg By: brian.fleming

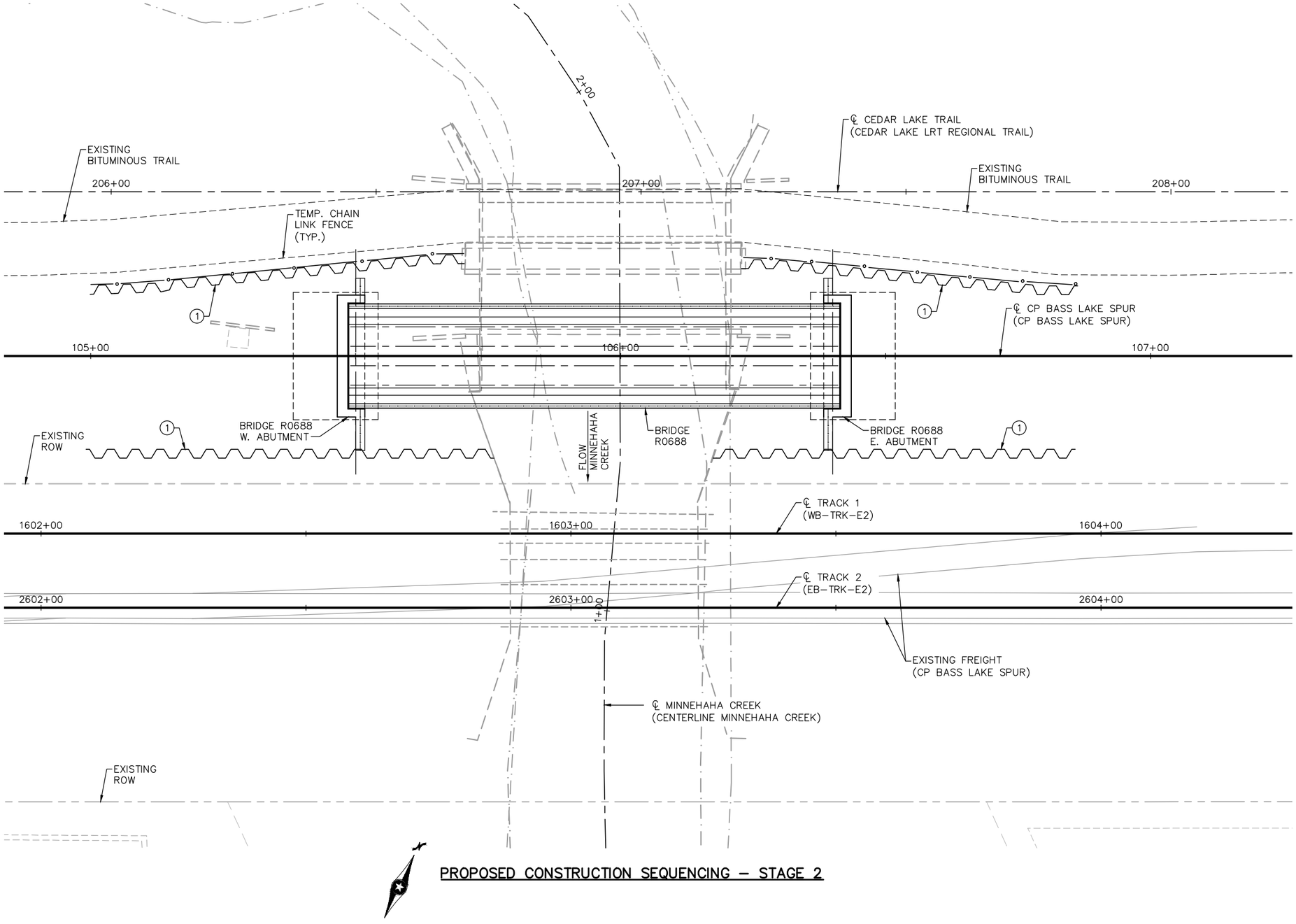

PROPOSED CONSTRUCTION SEQUENCING – STAGE 2

STAGING NOTES:

STAGES 1–4 SHOWN IN THIS PLAN SET, SEE BRIDGE R0689 FOR STAGES 5 & 6.

CONSTRUCT FREIGHT BRIDGE R0688. BACKFILL STRUCTURE.

CONSTRUCT TEMPORARY TRAIL UP TO ENDS OF BRIDGE R0688. TEMPORARY TRAIL SHALL HAVE A 10'–0" MINIMUM CLEAR WIDTH, 2'–0" CLEAR ZONE ALONG EACH SIDE AND PROVIDE TEMPORARY CHAIN LINK FENCE ALONG LENGTH OF TEMPORARY TRAIL ALIGNMENT.

(1) SOE

STAGING REQUIREMENTS:

ALL TRACKS SHALL BE KEPT OPEN FOR TRAIN USE DURING CONSTRUCTION EXCEPT WITH PRIOR APPROVAL. CP SHALL HAVE FINAL AUTHORITY ON PERMITTED TRACK CLOSURES.

CEDAR LAKE TRAIL SHALL BE KEPT OPEN FOR PUBLIC USE DURING CONSTRUCTION EXCEPT WITH PRIOR APPROVAL.

NO.	DATE	BY	CHECK	DESIGN	REVISION / SUBMITTAL

DESIGNED BY: BAW | CHECKED BY: BLF
DRAWN BY: RHK | CHECKED BY: BLF

AECOM Kimley»Horn

90% SUBMISSION - 01/22/16

METROPOLITAN COUNCIL

SOUTHWEST Green Line LRT Extension

CIVIL - VOLUME 4D
MINNEHAHA CREEK TRAIL BRIDGE
BRIDGE R0687
STAGING PLAN 2

DISCIPLINE: STRUCTURES
SHEET NAME: CBRR0687-BRG-STG-001-2

SHEET 44 OF 46

Dec, 10 2015 08:23 am v:\3400_ADC\CAD\SEGMENT E2\PLAN SHEETS\STRUCTURES\MNHA-TRL\CBRR0687-BRG-STG-001.dwg By: brian.fleming

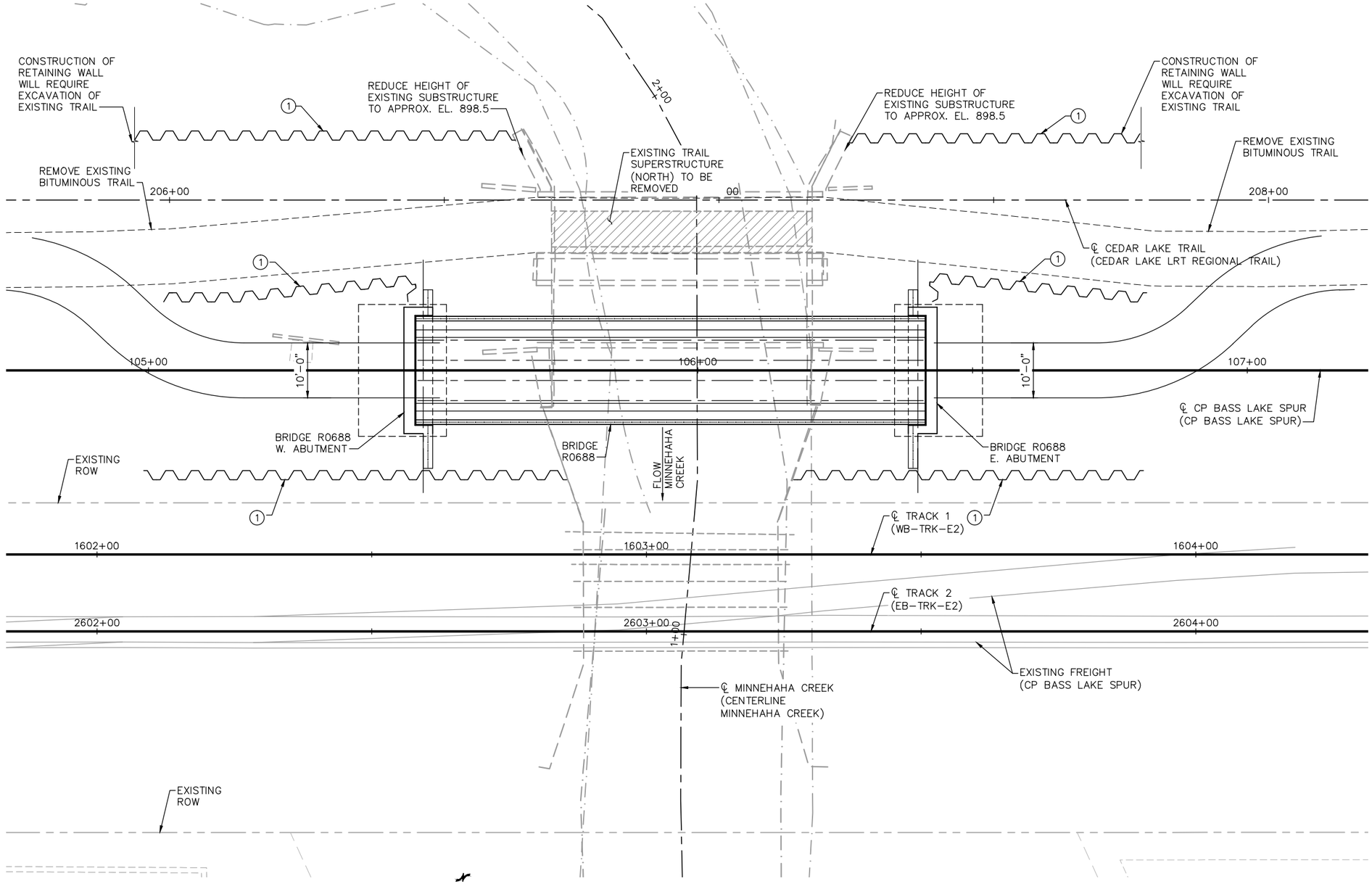

PROPOSED CONSTRUCTION SEQUENCING – STAGE 3

STAGING NOTES:

STAGES 1–4 SHOWN IN THIS PLAN SET, SEE BRIDGE R0689 FOR STAGES 5 & 6.

RELOCATE EXISTING TRAIL TO TEMPORARY TRAIL ALIGNMENT OVER BRIDGE R0688.

REMOVE AND INSTALL SOE AS NECESSARY TO CONSTRUCT PROPOSED TRAIL BRIDGE R0687 AND RETAINING WALLS.

REMOVE EXISTING TRAIL SUPERSTRUCTURE (NORTH). EXCAVATE FOR CONSTRUCTION OF TRAIL BRIDGE R0687. EXISTING SUBSTRUCTURES TO REMAIN IN PLACE. REDUCE HEIGHT OF EXISTING SUBSTRUCTURE APPROXIMATE ELEVATION 898.5 AS APPROVED BY ENGINEER IN FIELD.

CONSTRUCT PROPOSED BRIDGE R0687 AND RETAINING WALLS E201 AND E204. BACKFILL STRUCTURES.

REMOVE SOE AS REQUIRED.

(1) SOE

STAGING REQUIREMENTS:

ALL TRACKS SHALL BE KEPT OPEN FOR TRAIN USE DURING CONSTRUCTION EXCEPT WITH PRIOR APPROVAL. CP SHALL HAVE FINAL AUTHORITY ON PERMITTED TRACK CLOSURES.

CEDAR LAKE TRAIL SHALL BE KEPT OPEN FOR PUBLIC USE DURING CONSTRUCTION EXCEPT WITH PRIOR APPROVAL.

NO.	DATE	BY	CHECK	DESIGN	REVISION / SUBMITTAL

DESIGNED BY: BAW CHECKED BY: BLF
DRAWN BY: RHK CHECKED BY: BLF

AECOM Kimley»Horn

90% SUBMISSION - 01/22/16

METROPOLITAN COUNCIL

SOUTHWEST Green Line LRT Extension

CIVIL - VOLUME 4D
MINNEHAHA CREEK TRAIL BRIDGE
BRIDGE R0687
STAGING PLAN 3

DISCIPLINE: STRUCTURES
SHEET NAME: CBRR0687-BRG-STG-001-3

SHEET 45 OF 46

Dec, 10 2015 08:24 am V:\3400_ADC\CAD\SEGMENT E2\PLAN SHEETS\STRUCTURES\MNHA-TRL\CBRR0687-BRG-STG-001.dwg By: brian.fleming

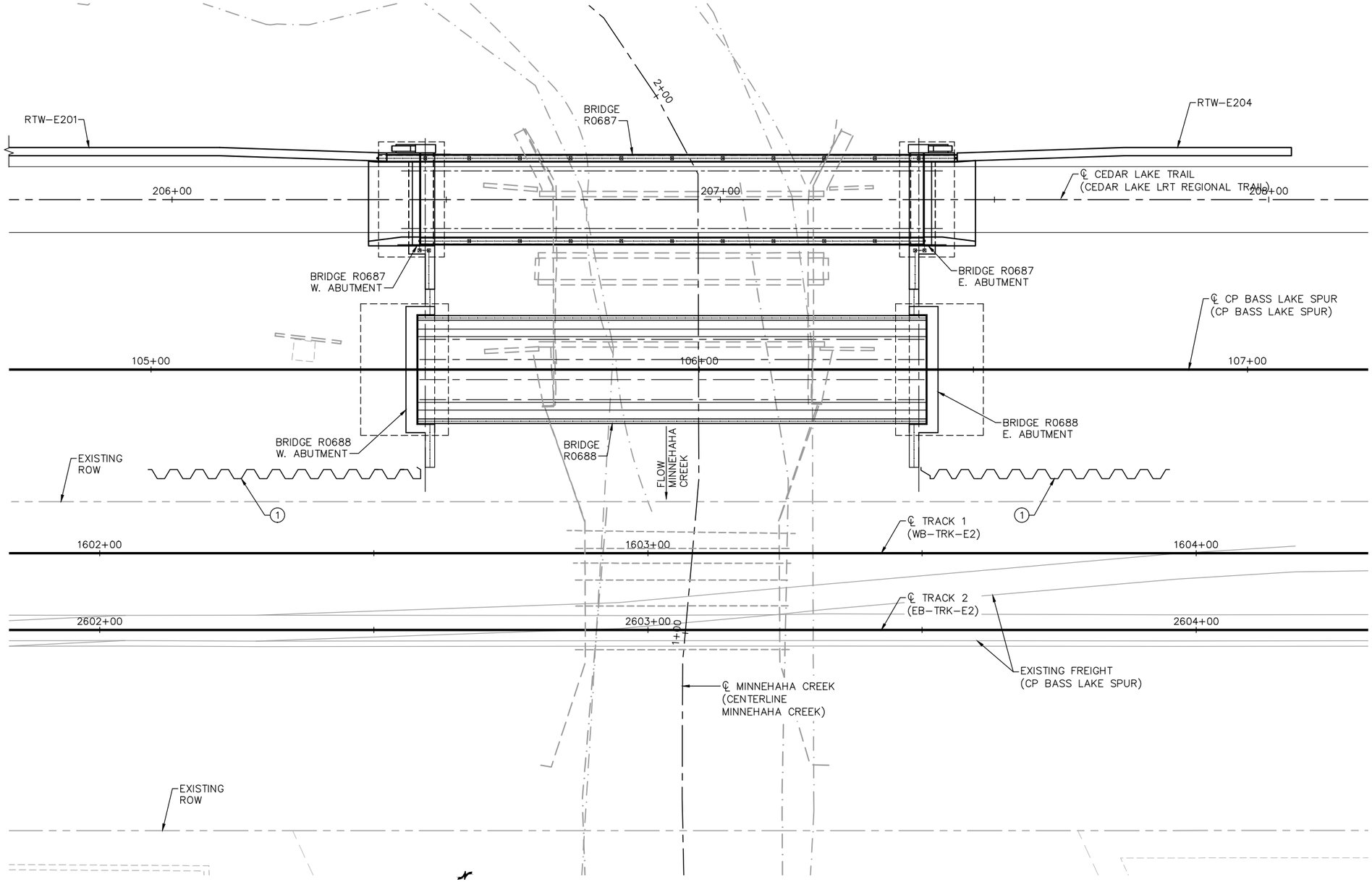

PROPOSED CONSTRUCTION SEQUENCING – STAGE 4

STAGING NOTES:

STAGES 1–4 SHOWN IN THIS PLAN SET, SEE BRIDGE R0689 FOR STAGES 5 & 6.

RELOCATE TEMPORARY CEDAR LAKE TRAIL TO FINAL ALIGNMENT. REMOVE TEMPORARY TRAIL ALIGNMENT.

RELOCATE EXISTING CP BASE LAKE SPUR TO FINAL ALIGNMENT.

(1) SOE

STAGING REQUIREMENTS:

ALL TRACKS SHALL BE KEPT OPEN FOR TRAIN USE DURING CONSTRUCTION EXCEPT WITH PRIOR APPROVAL. CP SHALL HAVE FINAL AUTHORITY ON PERMITTED TRACK CLOSURES.

CEDAR LAKE TRAIL SHALL BE KEPT OPEN FOR PUBLIC USE DURING CONSTRUCTION EXCEPT WITH PRIOR APPROVAL.

NO.	DATE	BY	CHECK	DESIGN	REVISION / SUBMITTAL

DESIGNED BY: BAW | CHECKED BY: BLF
DRAWN BY: RHK | CHECKED BY: BLF

AECOM Kimley»Horn

90% SUBMISSION - 01/22/16

METROPOLITAN COUNCIL

SOUTHWEST Green Line LRT Extension

CIVIL - VOLUME 4D
MINNEHAHA CREEK TRAIL BRIDGE
BRIDGE R0687
STAGING PLAN 4

DISCIPLINE: STRUCTURES
SHEET NAME: CBRR0687-BRG-STG-001-4

SHEET 46 OF 46

Dec, 10 2015 08:25 am V:\3400_ADC\CAD\SEGMENT E2\PLAN SHEETS\STRUCTURES\MNHA–TRL\CBRR0687–BRG–STG–001.dwg By: brian.fleming

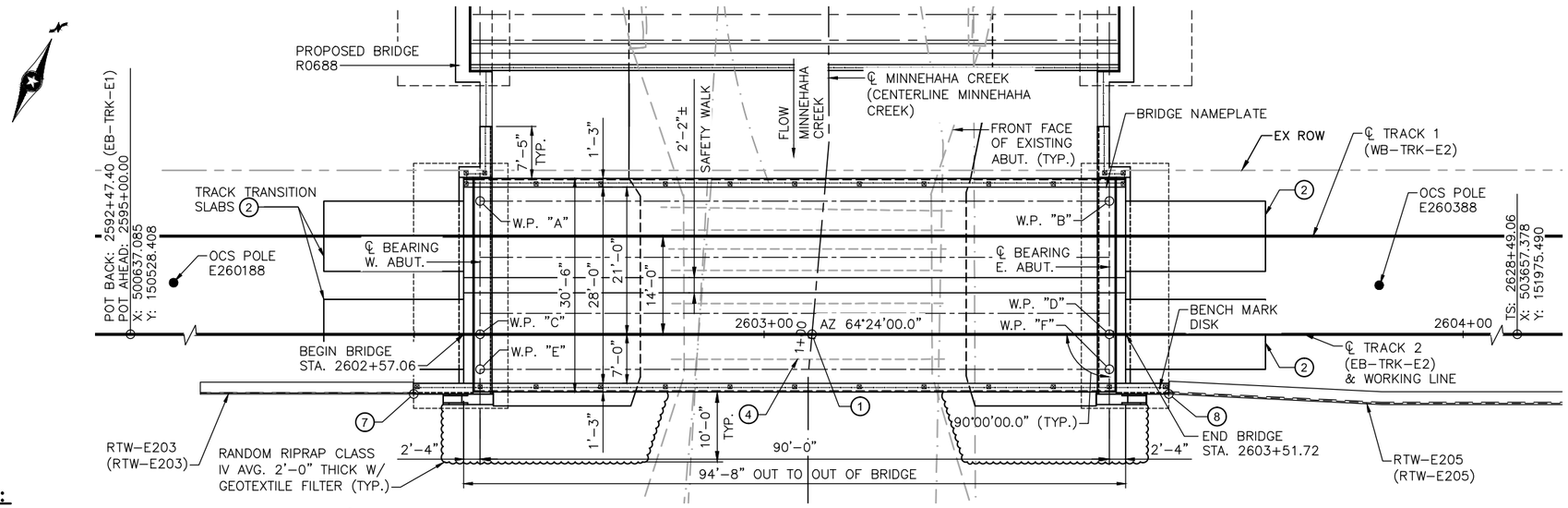

NOTES:

SEE SHEETS 44 AND 45 FOR STAGING PLANS AND SOE.

SEE BRIDGE SURVEY SHEET FOR IN-PLACE UTILITIES.

AZIMUTH OF SUBSTRUCTURE: 154° 24' 00.00"

PLANS ARE NOT AVAILABLE FOR THE EXISTING BRIDGES. THE EXISTING ABUTMENT STEM THICKNESS AND FOOTING LIMITS ARE UNKNOWN FOR BOTH BRIDGES

(1) CONTROL POINT
℄ TRACK 2 (EB-TRK-E2) STA. 2603+06.85
℄ MINNEHAHA CREEK (CENTERLINE MINNEHAHA CREEK) STA. 1+00.57
X = 501364.731
Y = 150877.037
Δ = 84°55'09.3"

(2) SEE TRACK PLANS FOR TRANSITION SLAB DETAILS.

(3) BOTTOM PORTION OF EXISTING ABUTMENTS TO REMAIN. REMOVE EXISTING ABUTMENT TO ELEVATION 898.5±. SEE STAGING PLANS FOR SUBSTRUCTURE REMOVAL LIMITS.

(4) EXISTING BRIDGE, SINGLE SPAN, 37' LONG AND 21' WIDE STEEL DECK PLATE GIRDER BRIDGE. SUPERSTRUCTURE AND PORTION OF SUBSTRUCTURE TO BE REMOVED. SEE STAGING PLANS FOR REMOVAL NOTES.

(5) ABUTMENT FOOTING DEPTH DETERMINED BASED ON LOCATION OF AN ASSUMED FUTURE TRAIL. VERTICAL AND HORIZONTAL CLEARANCES BELOW SUPERSTRUCTURE MEET CURRENT REQUIREMENTS FOR A 12'-0" WIDE TRAIL SECTION.

GENERAL PLAN

0 5' 10' 20'
SCALE IN FEET

(6) ABUTMENTS TESTED AND FOUND TO BE COATED IN LEAD CONTAINING PAINT. CONTRACTOR SHALL USE APPROPRIATE CONTAINMENT AND REMOVAL METHODS.

(7) END RETAINING WALL E203
℄ TRACK 2 (EB-TRACK-E2) STA. 2602+49.89
X = 501316.959
Y = 150844.909
MEASURED AT F.F. WINGWALL

(8) BEGIN RETAINING WALL E205
℄ TRACK 2 (EB-TRK-E2) STA. 2603+57.89
X = 501414.357
Y = 150891.574
MEASURED AT F.F. WINGWALL

(9) ARCHITECTURAL CONCRETE TEXTURE (STRIATED RELIEF) WITH ARCHITECTURAL SURFACE FINISH (SINGLE COLOR). SEE ABUTMENT SHEETS FOR LIMITS.

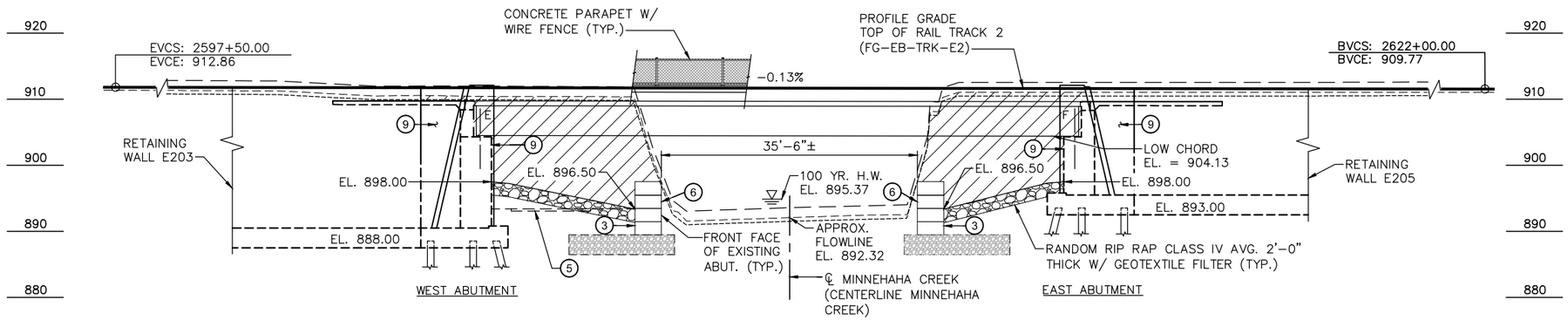

GENERAL ELEVATION

0 5' 10' 20'
SCALE IN FEET

EXISTING GROUND PROFILE
23' LEFT — — — —
℄ TRACK 2 ————————
9' RIGHT ----------

HATCHED AREA TO BE REMOVED

DESIGN DATA

AASHTO LRFD BRIDGE DESIGN SPECIFICATIONS, 7TH EDITION, 2014 WITH 2015 INTERIM REVISIONS

SOUTHWEST LIGHT RAIL TRANSIT DESIGN CRITERIA (REVISION 4.0)

LOAD AND RESISTANCE FACTOR DESIGN METHOD

LRV & MV LOAD DIAGRAM SHOWN ON TRANSVERSE SECTION SHEET

MATERIAL DESIGN PROPERTIES:
REINFORCED CONCRETE:
f'c = 4 KSI n = 8
fy = 60 KSI REINFORCEMENT

PRESTRESSED CONCRETE:
f'c = 7 KSI n = 1
fpu = 270 KSI
FOR 0.6" DIA. LOW RELAXATION STRANDS

DESIGN SPEED: OVER = 65 MPH (LRT)

DECK AREA = 2796 SQ. FT.

LIST OF SHEETS

NO.	DESCRIPTION
1	GENERAL PLAN AND ELEVATION
2	TRANSVERSE SECTION AND QUANTITIES
3	STRAY CURRENT/CORROSION CONTROL NOTES
4	BRIDGE LAYOUT
5–8	WEST ABUTMENT DETAILS
9–13	WEST ABUTMENT REINFORCEMENT
14–17	EAST ABUTMENT DETAILS
18–22	EAST ABUTMENT REINFORCEMENT
23	FRAMING PLAN
24	MN54 PRESTRESSED CONCRETE BEAM DETAILS
25–28	SUPERSTRUCTURE DETAILS
29	CONCRETE PARAPET (TYPE P-1)
30	WIRE FENCE (DESIGN W-1)
31	WATERPROOF EXPANSION DEVICE
32–33	DECK DRAINAGE AND WATERPROOFING
34	RIP RAP SLOPE WITH GEOTEXTILE FILTER
35–39	BRIDGE DETAILS
40	AS-BUILT BRIDGE DATA
41	BRIDGE SURVEY
42	BRIDGE SURVEY PLAN
43	BRIDGE SURVEY PROFILE
44–45	STAGING PLANS

BRIDGE NO. R0689

SOUTHWEST LRT OVER MINNEHAHA CREEK
1.7 MI. S.W. OF JCT. T.H. 7 & T.H. 100
IN ST. LOUIS PARK
90'-0" PRESTRESSED CONCRETE BEAM SPAN
28'-0" LRT
00°-00'-00.00" SKEW
P-1 PARAPET W/ WIRE FENCE
BRIDGE I.D. NO. 501

GENERAL PLAN AND ELEVATION

SEC 20 T 117N R 21W
CITY OF ST. LOUIS PARK HENNEPIN COUNTY

JOB NO. T9N635 | STATE PROJ. NO.: 9909-01 | MNDOT REVIEW: JOE NIETFELD

NO.	DATE	BY	CHECK	DESIGN	REVISION / SUBMITTAL

DESIGNED BY: CJS CHECKED BY: DLS
DRAWN BY: KAG CHECKED BY: DLS

AECOM Kimley»Horn

90% SUBMISSION - 01/22/16

METROPOLITAN COUNCIL

SOUTHWEST Green Line LRT Extension

CIVIL - VOLUME 4D
MINNEHAHA CREEK LRT BRIDGE
BRIDGE R0689
GENERAL PLAN AND ELEVATION

DISCIPLINE: STRUCTURES
SHEET NAME: CBRR0689-BRG-GPE-001

SHEET 1 OF 45

Dec, 14 2015 01:02 pm V:\3400_ADC\CAD\SEGMENT E2\PLAN SHEETS\STRUCTURES\MNHA-LRT\CBRR0689-BRG-GPE-001.dwg By: Joe.Menapace

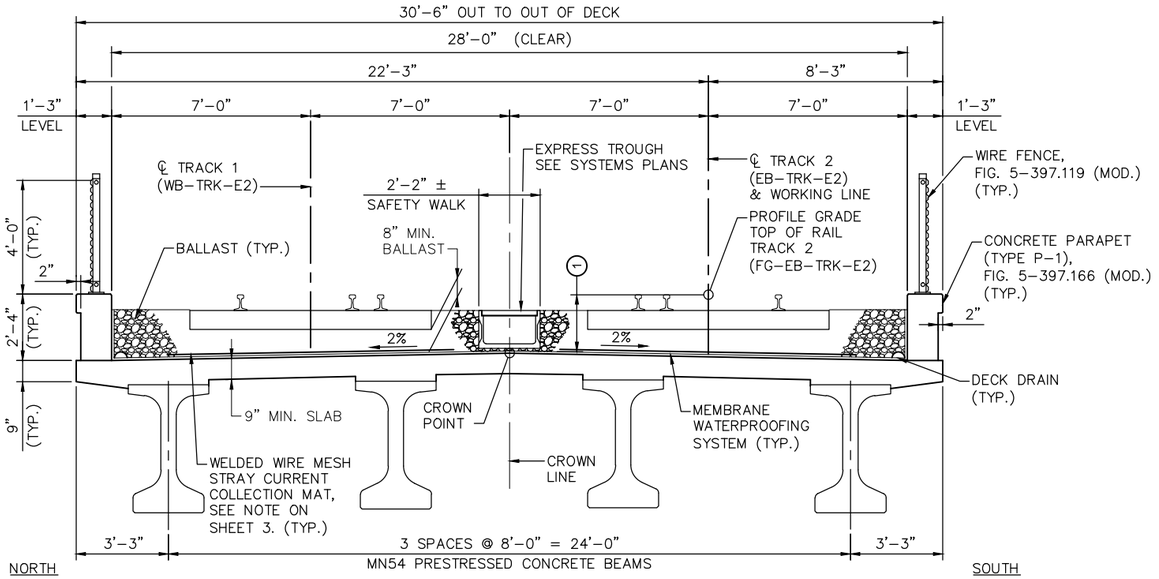

TRANSVERSE SECTION

0 1.5' 3' 6'

SCALE IN FEET

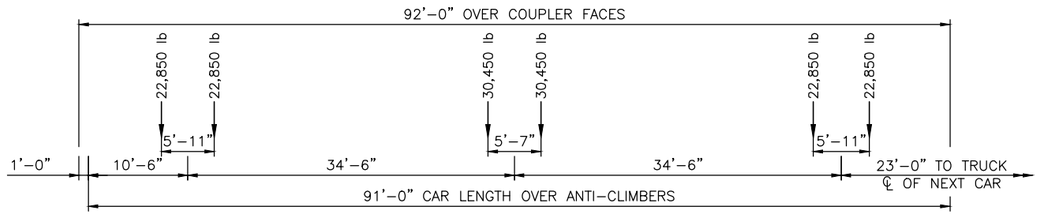

LIGHT RAIL VEHICLE LOADING DIAGRAM

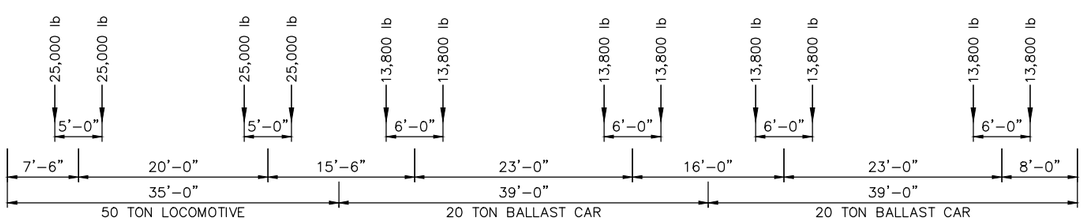

MAINTENANCE TRAIN LOADING DIAGRAM

CONSTRUCTION NOTES:

THE 2016 EDITION OF THE MINNESOTA DEPARTMENT OF TRANSPORTATION "STANDARD SPECIFICATIONS FOR CONSTRUCTION" SHALL GOVERN.

BRIDGE SEAT REINFORCEMENT SHALL BE CAREFULLY PLACED TO AVOID INTERFERENCE WITH DRILLING HOLES FOR ANCHOR RODS, THE BEAMS SHALL BE ERECTED IN FINAL POSITION PRIOR TO DRILLING HOLES FOR AND PLACING ANCHOR RODS.

THE BAR SIZES SHOWN IN THIS PLAN ARE IN U.S. CUSTOMARY DESIGNATIONS. THE FIRST DIGIT OR THE FIRST TWO DIGITS OF EACH BAR MARK INDICATE THE BAR SIZE.

BARS MARKED WITH THE SUFFIX "E" SHALL BE EPOXY COATED IN ACCORDANCE WITH SPEC. 3301.

THE SUBSURFACE UTILITY INFORMATION IN THIS PLAN IS UTILITY QUALITY LEVEL D. THIS UTILITY QUALITY LEVEL WAS DETERMINED ACCORDING TO THE GUIDELINES OF CI/ASCE 38-02, ENTITLED "STANDARD GUIDELINES FOR THE COLLECTION AND DEPICTION OF EXISTING SUBSURFACE UTILITY DATA".

THE PILE LOADS SHOWN IN THE PLANS AND THE CORRESPONDING NOMINAL PILE BEARING RESISTANCE (Rn) WERE COMPUTED USING LRFD METHODOLOGY. PILE BEARING RESISTANCE DETERMINED IN THE FIELD SHALL INCORPORATE THE METHODS AND/OR FORMULAS DESCRIBED IN THE SPECIAL PROVISIONS.

GROUNDING NOTES:

SEE SHEETS ELE-SITE-SCH-504, ELE-SITE-DTL-600, ELE-SITE-DTL-601 AND ELE-SITE-DTL-602 FOR ADDITIONAL FENCE GROUNDING INFORMATION. FOR BRIDGES, ABUTMENTS AND RETAINING WALLS THAT DON'T HAVE STRAY CURRENT SYSTEMS, GROUND THE FENCE AS SHOWN IN THE WIRE FENCE DETAIL.

NOTES:

(1) TOP OF RAIL TO CROWN POINT
2'-0" AT ℄ BRG. W. ABUT.
2'-3" AT ℄ BRG. E. ABUT.

NO OCS POLES ARE LOCATED ON BRIDGE.

NOTES:

1. THE LRT TRAIN SHALL CONSIST OF EITHER ONE, TWO, OR THREE CARS, WHICHEVER PRODUCES THE MAXIMUM LOAD FOR THE ELEMENT UNDER CONSIDERATION.
2. AXLE LOAD IN POUNDS.
3. LOADING DIAGRAM REPRESENTS MAXIMUM LOAD AT EACH TRUCK.

NOTES:

1. THE MAINTENANCE TRAIN SHALL CONSIST OF ONE LOCOMOTIVE AND ONE, TWO, THREE, OR FOUR BALLAST CARS, WHICHEVER PRODUCES THE MAXIMUM LOAD FOR THE ELEMENT UNDER CONSIDERATION.
2. AXLE LOAD IN POUNDS.
3. WEIGHT OF EMPTY BALLAST CAR IS 15,000 POUNDS.

SCHEDULE OF QUANTITIES

SPEC. SECTION	COMPONENT ITEM	UNIT	QUANTITY
–	CONSTRUCT BRIDGE R0689	LUMP SUM	LS

COMPONENT ITEM SUMMARY (BRIDGE R0689)

	SPEC. SECTION (3)	COMPONENT ITEM	UNIT (2)	QUANTITY (2)
(1)	2401	STRUCTURAL CONCRETE (1G52)	CU. YD.	
	2401	STRUCTURAL CONCRETE (3B52)	CU. YD.	
	2401	TYPE P-1 BARRIER CONCRETE (3S52)	LIN. FT.	
	2401	REINFORCEMENT BARS	POUND	
	2401	REINFORCEMENT BARS (EPOXY COATED)	POUND	
	SB-XX	BRIDGE SLAB CONCRETE (3YHPC-M)	CU. YD.	
	2402	EXPANSION JOINT DEVICES TYPE 4	LIN. FT.	
	2402	BEARING ASSEMBLY	EACH	
	2405	PRESTRESSED CONCRETE BEAMS MN54	LIN. FT.	
	2405	DIAPHRAGMS FOR TYPE MN54 PRESTRESSED BEAMS	LIN. FT.	
	SB-XX	ARCHITECTURAL CONCRETE TEXTURE (STRIATED RELIEF)	SQ. FT.	
	SB-XX	ARCHITECTURAL CONCRETE TEXTURE (LIMESTONE)	SQ. FT.	
	2442	REMOVE EXISTING BRIDGE	LUMP SUM	
	SB-XX	STRUCTURAL EXCAVATION CLASS U	CU. YD.	
(4)	SB-XX	STEEL H-PILING 12"	LIN. FT.	
	2452	STEEL H-TEST PILE 75 FT LONG 12"	EACH	
	2452	PILE TIP PROTECTION 12"	EACH	
	SB-XX	STEEL SHEET PILING (TEMPORARY)	SQ. FT.	
	2481	MEMBRANE WATERPROOFING SYSTEM	LIN. FT.	
	2502	DRAINAGE SYSTEM TYPE (B910)	EACH	
	2502	DRAINGE SYSTEM (BRIDGE DECK)	LUMP SUM	
	2511	RANDOM RIPRAP CLASS IV	CU. YD.	
	2511	GEOTEXTILE FILTER TYPE VII	SQ. YD.	
(5)	2557	WIRE FENCE DESIGN W-1	LIN. FT.	

NOTES:

(1) A BENCH MARK IS REQUIRED. LOCATED AT THE SE CORNER OF THE BRIDGE. STATE WILL FURNISH DISK. BEND PRONGS OUTWARD TO ANCHOR DISK IN CONCRETE. BOTTOM OF DISK TOP TO BE PLACED FLUSH WITH CONCRETE.

(2) QUANTITIES LISTED FOR THE COMPONENT ITEMS OF THE LUMP SUM BR R0689 ITEM ARE FOR INFORMATIONAL PURPOSES. ANY ADDITIONAL ITEMS OR CHANGES IN QUANTITIES REQUIRED SHALL BE PROVIDED BY THE CONTRACTOR WITH NO ADDITIONAL COMPENSATION.

(3) MEASUREMENT AND PAYMENT FOR COMPONENT ITEMS SHALL BE PART OF THE LUMP SUM PAYMENT FOR THE BR R0689. REFER TO MnDOT STANDARD SPECIFICATION OR SPECIAL PROVISION FOR TECHNICAL SPECIFICATION REQUIREMENTS FOR ALL PROVISION OTHER THAN MEASUREMENT AND PAYMENT REQUIREMENTS.

(4) BACKFILL BEHIND ABUTMENTS SHALL BE SELECT GRANULAR BORROW PER SPEC. 3149.2.B.2. SEE SHEET 43 FOR PLACEMENT LIMITS. BACKFILL DENSITY SHALL BE ATTAINED BY THE SPECIFIED DENSITY METHOD IN ACCORDANCE WITH SPEC. 2105.3.F.1.

(5) QUANTITY FOR 48" TALL WIRE FENCE FABRIC.

NO.	DATE	BY	CHECK	DESIGN	REVISION / SUBMITTAL

DESIGNED BY: CJS CHECKED BY: DLS
DRAWN BY: KAG CHECKED BY: DLS

AECOM Kimley»Horn

90% SUBMISSION - 01/22/16

METROPOLITAN COUNCIL

SOUTHWEST Green Line LRT Extension

CIVIL - VOLUME 4D
MINNEHAHA CREEK LRT BRIDGE
BRIDGE R0689
TRANSVERSE SECTION AND QUANTITIES

DISCIPLINE: STRUCTURES
SHEET NAME: CBRR0689-BRG-TRN-001

SHEET 2 OF 45

Dec, 14 2015 01:02 pm V:\3400_ADC\CAD\SEGMENT E2\PLAN SHEETS\STRUCTURES\MNHA-LRT\CBRR0689-BRG-TRN-001.dwg By: Joe.Menapace

STRAY CURRENT CONTROL NOTES

THE FOLLOWING STRAY CURRENT CONTROL NOTES ARE A SUPPLEMENT TO THE SYSTEMWIDE ELECTRICAL DRAWINGS – SEE SYSTEMS DRAWINGS, VOLUME 12 FOR ASSOCIATED DETAILS AND DOCUMENT CERTIFICATION RELATED TO STRAY CURRENT REQUIREMENTS.

1. INSTALL ELECTRICALLY CONTINUOUS STRAY CURRENT COLLECTION MAT WITH TEST STATIONS AS SHOWN ON SHEETS E0-SYS-CORR-DTL-004 TO 007 ABOVE DIELECTRIC WATERPROOFING MEMBRANE.

2. ALL EPOXY COATED REBAR IN THE DECK, BEAMS, ABUTMENT WALL AND WINGWALLS SHALL BE SECURED WITH NON-METALLIC OR NON-METALLIC COATED TIES.

3. BLACK REBAR IN ABUTMENT FOOTINGS SHALL BE MADE ELECTRICALLY CONTINUOUS WITHIN FOOTINGS. SEE DETAIL 4 ON SHEET E0-SYS-CORR-DTL-001.

4. H-PILES IN ABUTMENT AND RTW FOOTINGS SHALL BE MADE ELECTRICALLY CONTINUOUS WITH WELDED REBAR IN THE FOOTINGS. SEE DETAILS ON DWG E0-SYS-CORR-DTL-008.

5. LONGITUDINAL REBAR IN TRANSITION SLAB SHALL BE MADE ELECTRICALLY CONTINUOUS WITHIN SLAB SEE DETAIL 6 ON E0-SYS-CORR-DTL-001. END TRANSVERSE COLLECTOR BARS SHALL BE WELDED TO ALL LONGITUDINAL REBARS AT EACH END AND IN EACH REBAR LAYER OF THE TRANSITION SLAB. TOP AND BOTTOM REBAR LAYERS SHALL BE WELDED TOGETHER USING ½" X 2" STEEL STRAPS INSTALLED 2 PER TRACK AT EACH END OF TRANSITION SLAB. #1/0 AWG CABLES (2 PER TRACK) SHALL BE WELDED TO END TRANSVERSE COLLECTOR BAR NEAREST ABUTMENT AND TERMINATED IN JUNCTION BOX ALONG BRIDGE THAT HOUSES WIRES FROM STRAY CURRENT COLLECTION MAT ALONG BRIDGE AND FROM THE GROUND ROD ARRAY. SEE DETAIL 2 ON SHEET E0-SYS-CORR-DTL-007 AND DETAIL 2 ON SHEET E0-SYS-CORR-DTL-013. SUFFICIENT SLACK SHALL BE AVAILABLE IN THE CABLES THAT SPAN THE EXPANSION JOINT TO ACCOUNT FOR MOVEMENT OF THE JOINT.

6. INSTALL STRAY CURRENT TEST STATION ALONG BRIDGE HOUSING TWO #1/0 AWG CABLES FROM STRAY CURRENT COLLECTION MAT, TWO #1/0 AWG CABLES FROM WELDED REBAR IN TRANSITION SLAB, ONE 250 MCM CABLE FROM ADJACENT STRAY CURRENT TEST STATION AND ONE 250 MCM CABLE FROM GROUND ROD ARRAY AT BASE OF ABUTMENT. SEE SHEETS E0-SYS-CORR-DTL-004 TO 007, AND DETAILS 2 TO 4 ON SHEET E0-SYS-CORR-DTL-013. SEE NOTE 9. SUFFICIENT SLACK SHALL BE AVAILABLE IN THE CABLES THAT SPAN THE EXPANSION JOINT TO ACCOUNT FOR MOVEMENT OF THE JOINT.

7. INSTALL STRAY CURRENT TEST STATION HOUSING TWO 1/0 AWG CABLES FROM ELECTRICALLY CONTINUOUS REBAR AND H-PILES IN FOOTING AND ONE #14 AWG HMWPE CABLE FROM COPPER/COPPER SULFATE REFERENCE CELL. SEE DETAIL 4 ON SHEET E0-SYS-CORR-DTL-003 AND DETAIL 2 ON SHEET E0-SYS-CORR-DTL-018. SEE NOTE 9. REFERENCE CELL SHALL BE INSTALLED IN SOIL WITHIN 1' OF PILE AND 1' BELOW BOTTOM OF FOOTING.

8. INSTALL STRAY CURRENT GROUND ROD ARRAY NEAR BASE OF ABUTMENT. GROUND ROD ARRAY SHOULD EXHIBIT A MAXIMUM RESISTANCE TO EARTH OF 25 OHMS. USE 250 MCM THWN CABLE TO INTERCONNECT GROUND RODS AND AS GROUND CABLE TO STRAY CURRENT COLLECTION MAT TEST STATIONS AT END OF BRIDGE STRUCTURE. 250 MCM CABLE SHALL RUN INSIDE 2" SCH 80 PVC CONDUIT THAT IS EMBEDDED WITHIN ABUTMENT. SEE DETAILS 2 TO 4 ON SHEET E0-SYS-CORR-DTL-013.

9. ALL STRAY CURRENT TEST STATIONS SHALL BE INSTALLED AT LOCATIONS WHERE THEY WILL BE ACCESSIBLE AFTER COMPLETION OF ALL CONSTRUCTION ACTIVITIES AND DURING REVENUE LRT OPERATIONS.

10. MAINTAIN ELECTRICAL ISOLATION OF BLACK REBAR IN ABUTMENT WINGWALLS FROM BLACK REBAR IN RETAINING WALLS E203 AND E205.

11. MAINTAIN ELECTRICAL ISOLATION OF BLACK REBAR IN ABUTMENT FOOTING FROM WELDED REBAR IN RETAINING WALLS E203 AND E205.

12. INSTALL STRAY CURRENT BOND TEST STATION HOUSING TWO 1/0 AWG CABLES FROM ELECTRICALLY CONTINUOUS REBAR AND H-PILES IN ABUTMENT FOOTING, TWO 1/0 AWG CABLES FROM ELECTRICALLY CONTINUOUS REBAR AND H-PILES IN RETAINING WALL (E203 & E205) FOOTING AND TWO #14 AWG HMWPE CABLES FROM COPPER/COPPER SULFATE REFERENCE CELLS. REFERENCE CELLS SHALL BE BURIED IN SOIL WITHIN 1-FOOT OF THE H-PILE AND 1-FOOT BELOW THE BOTTOM OF THE FOOTING. SEE DETAIL 4 ON SHEET E0-SYS-CORR-DTL-003 AND DETAIL 3 ON SHEET E0-SYS-CORR-DTL-017. SEE NOTE 9.

13. MAINTAIN ELECTRICAL ISOLATION OF BLACK REBAR IN BRIDGE R0689 FROM SIMILAR REBAR IN BRIDGE R0688.

14. THE CONCRETE/SOIL INTERFACE ALONG EACH H-PILE UNDER THE FOOTING FOR THE ABUTMENTS SHALL BE COATED WITH A DIELECTRIC COATING. THE COATING SHALL EXTEND INTO THE CONCRETE FOOTING AT LEAST 6-INCHES AND EXTEND A MINIMUM OF 18-INCHES INTO THE SOIL ALONG THE EXTERNAL PILE SURFACE BELOW THE BOTTOM OF THE FOOTING.

Dec, 14 2015 01:02 pm V:\3400_ADC\CAD\SEGMENT E2\PLAN SHEETS\STRUCTURES\MNHA-LRT\CBRR0689-BRG-TRN-002.dwg By: Joe.Menapace

NO.	DATE	BY	CHECK	DESIGN	REVISION / SUBMITTAL

DESIGNED BY: JPJ | CHECKED BY: -
DRAWN BY: - | CHECKED BY: -

AECOM Kimley»Horn

90% SUBMISSION - 01/22/16

METROPOLITAN COUNCIL

SOUTHWEST Green Line LRT Extension

CIVIL - VOLUME 4D
MINNEHAHA CREEK LRT BRIDGE
BRIDGE R0689
STRAY CURRENT/CORROSION CONTROL NOTES

DISCIPLINE: STRUCTURES
SHEET NAME: CBRR0689-BRG-TRN-002

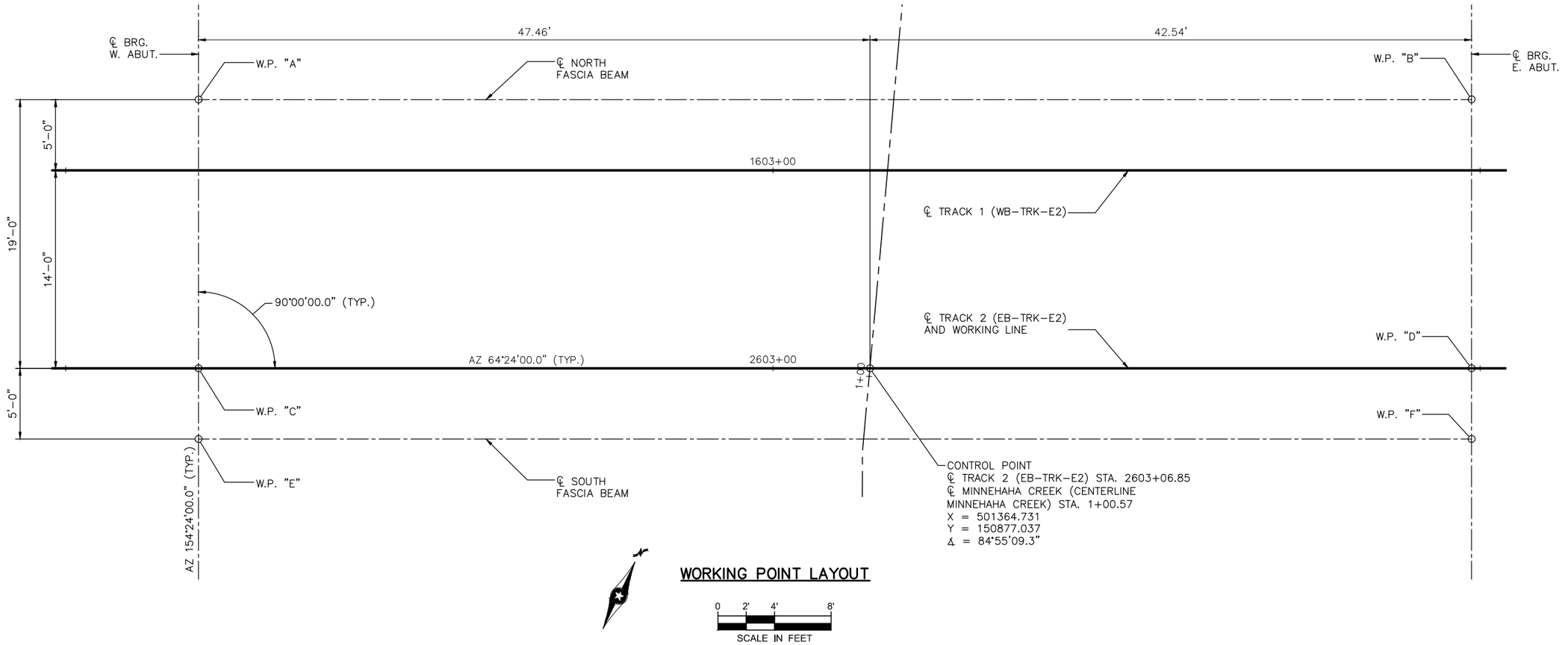

DIMENSIONS BETWEEN WORKING POINTS								COORDINATES		ELEVATIONS			
POINT	STATION	A	B	C	D	E	F	X	Y	TOP OF SLAB	TOP OF SLAB TO BRIDGE SEAT	BRIDGE SEAT	POINT
A	2602+59.39		90.00	19.00	91.98		93.15	501313.717	150873.663	909.98	5.89	904.09	A
B	2603+49.39			91.98	19.00	93.14		501394.882	150912.551	909.62	5.77	903.85	B
C	2602+59.39				90.00	5.00	90.14	501321.926	150856.529	910.08			C
D	2603+49.39					90.14	5.00	501403.091	150895.416	909.72			D
E	2602+59.39						90.00	501324.087	150852.020	909.98	5.89	904.09	E
F	2603+49.39							501405.252	150890.907	909.62	5.77	903.85	F

TOP OF SLAB TO BRIDGE SEAT						
	DECK THICKNESS	STOOL HEIGHT	BEAM HEIGHT	BEARING HEIGHT	TOTAL	
					INCHES	FEET
WEST ABUTMENT	9"	3"	54"	4 5/8"	70 5/8"	5.89
EAST ABUTMENT	9"	3"	54"	3 1/4"	69 1/4"	5.77

NO.	DATE	BY	CHECK	DESIGN	REVISION / SUBMITTAL

DESIGNED BY: CJS CHECKED BY: DLS
DRAWN BY: KAG CHECKED BY: DLS

AECOM Kimley»Horn

90% SUBMISSION - 01/22/16

METROPOLITAN COUNCIL

SOUTHWEST Green Line LRT Extension

CIVIL - VOLUME 4D
MINNEHAHA CREEK LRT BRIDGE
BRIDGE R0689
BRIDGE LAYOUT

DISCIPLINE: STRUCTURES
SHEET NAME: CBRR0689-BRG-SUP-001

SHEET 4 OF 45

Dec, 14 2015 01:03 pm V:\3400_ADC\CAD\SEGMENT E2\PLAN SHEETS\STRUCTURES\MNHA-LRT\CBRR0689-BRG-SUP-001.dwg By: Joe.Menapace

WEST ABUTMENT COMPUTED PILE LOAD - TONS/PILE	
FACTORED DEAD LOAD + EARTH PRESSURE	72.7
FACTORED LIVE LOAD	32.6
* FACTORED DESIGN LOAD	105.3

* BASED ON STRENGTH I LOAD COMBINATION.

WEST ABUTMENT REQUIRED NOMINAL PILE BEARING RESISTANCE FOR H-PILES Rn - TONS/PILE		
FIELD CONTROL METHOD	φdyn	* Rn
MN/DOT PILE FORMULA 2012 (MPF12) $R_n = 20\sqrt{\frac{W \times H}{1000} x log\left(\frac{10}{S}\right)}$	0.60	176
PDA	0.65	162

* Rn = (FACTORED DESIGN LOAD) / φdyn

GENERAL PILE NOTES:

1 HP12x53 STEEL TEST PILE 75 FT. LONG
18 HP12x53 STEEL PILES EST. 75 FT. LENGTH
19 HP12x53 STEEL PILES REQ'D FOR WEST ABUT.

ALL PILES TO BE HP12x53 WITH PILE TIP PROTECTION.

PILE SPACING SHOWN IS AT BOTTOM OF FOOTING.

PILES MARKED THUS ⊥ TO BE BATTERED 3" PER FOOT IN DIRECTION SHOWN.

FOR PILE SPLICE DETAILS SEE DETAIL B202.

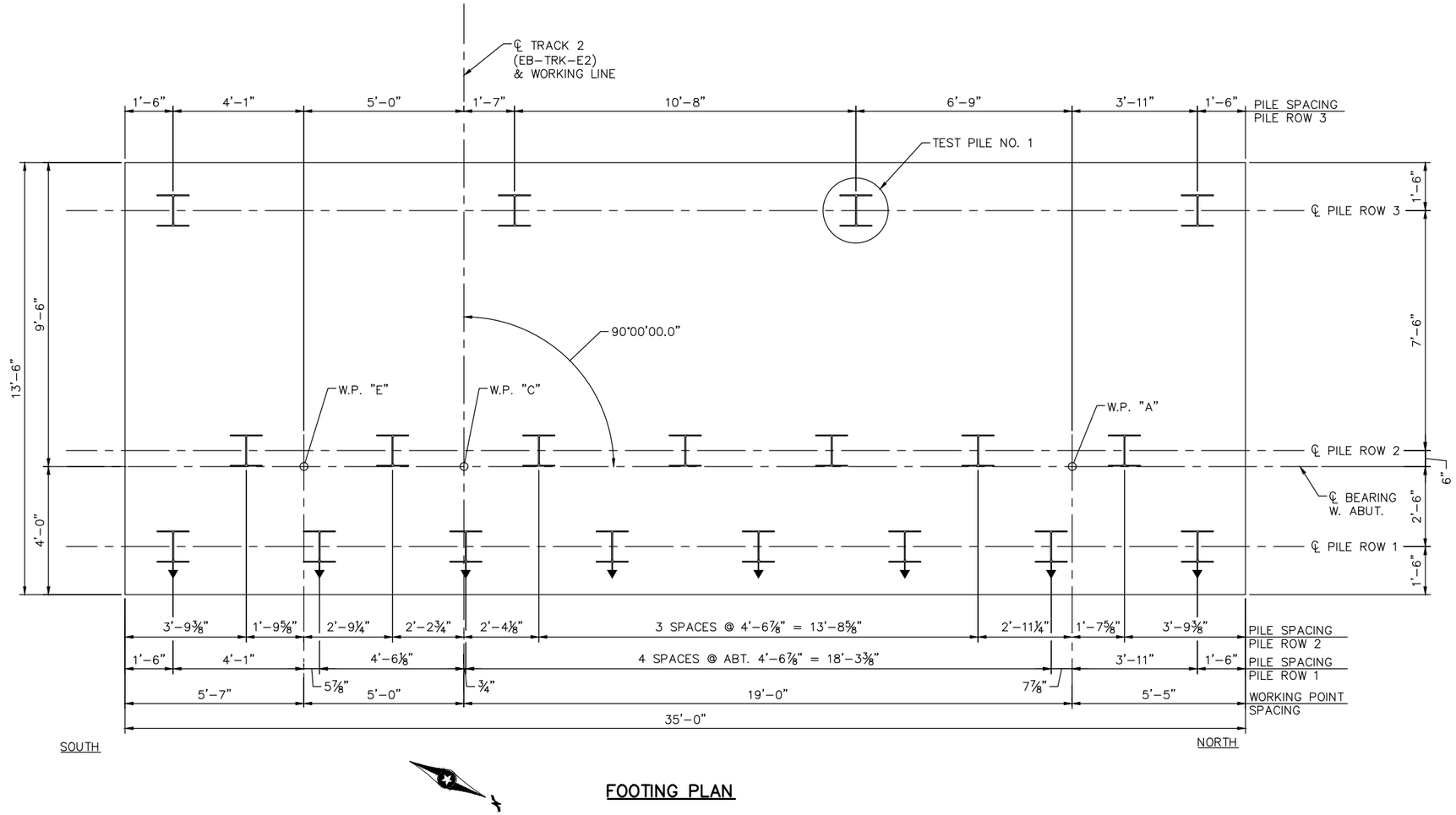

FOOTING PLAN

NO.	DATE	BY	CHECK	DESIGN	REVISION / SUBMITTAL

DESIGNED BY: CJS | CHECKED BY: DLS
DRAWN BY: KAG | CHECKED BY: DLS

AECOM Kimley»Horn

90% SUBMISSION - 01/22/16

METROPOLITAN COUNCIL

SOUTHWEST Green Line LRT Extension

CIVIL - VOLUME 4D
MINNEHAHA CREEK LRT BRIDGE
BRIDGE R0689
WEST ABUTMENT DETAILS 1

DISCIPLINE: STRUCTURES
SHEET NAME: CBRR0689-BRG-ABT-001

SHEET 5 OF 45

Dec, 14 2015 01:03 pm v:\3400_ADC\CAD\SEGMENT E2\PLAN SHEETS\STRUCTURES\MNHA-LRT\CBRR0689-BRG-ABT-001.dwg By: Joe.Menapace

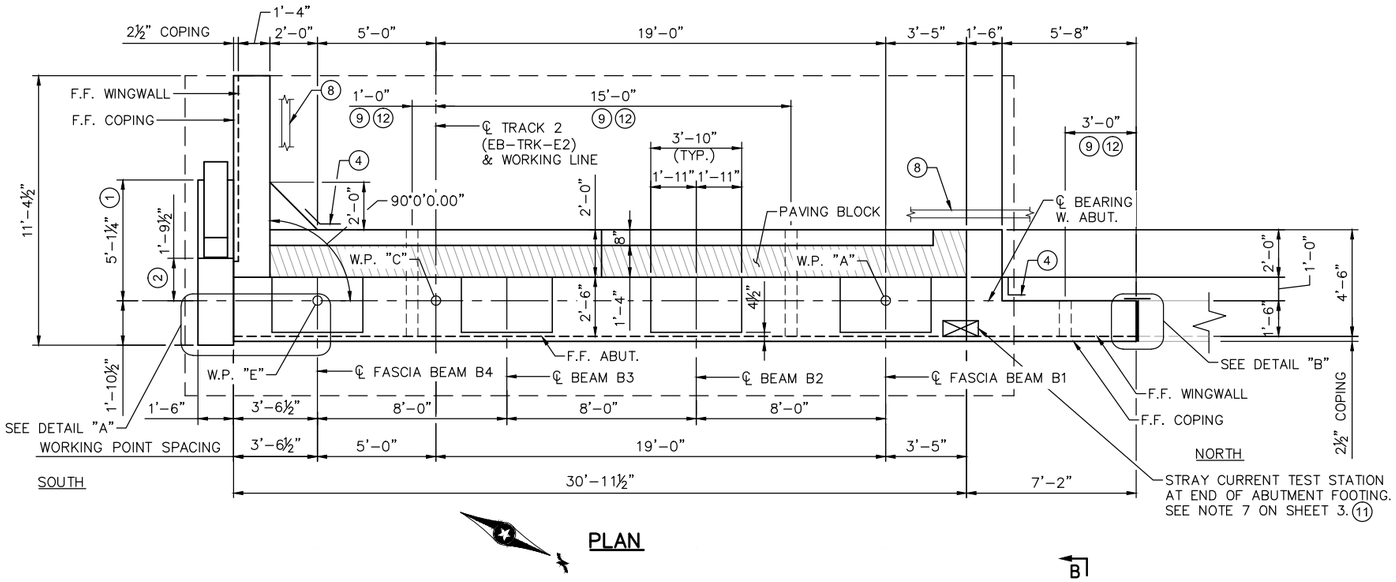

PLAN

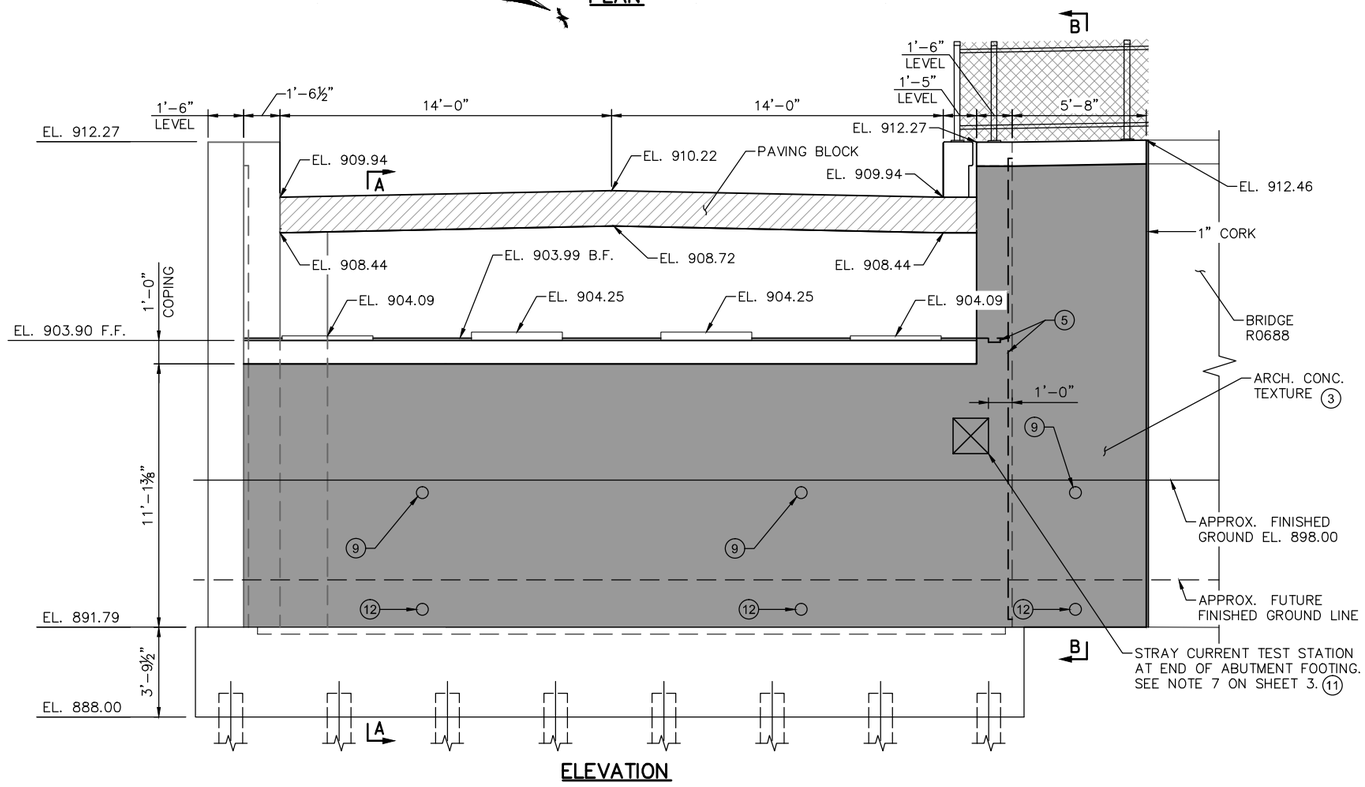

ELEVATION

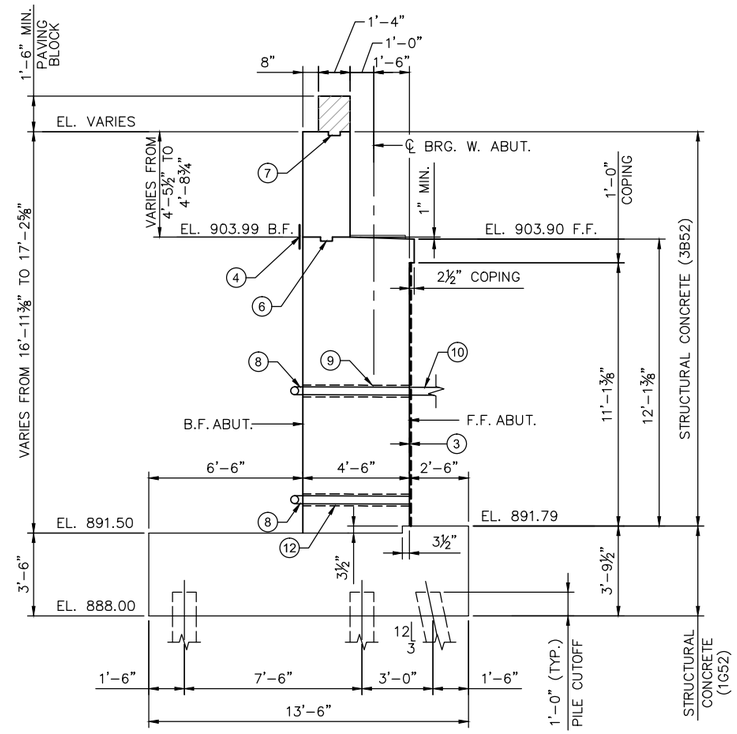

SECTION A–A

NOTES:

ARCHITECTURAL TREATMENT LIMITS EXTEND TO TOP OF FOOTING TO ALLOW FOR FUTURE GRADE WITH TRAIL CONSTRUCTED.

PAVING BLOCK HATCHED AREA INDICATES THAT PORTION TO BE PLACED WITH THE SUPERSTRUCTURE CONCRETE.

SEE SHEET 7 FOR SECTION B–B AND DETAILS "A" AND "B".

(1) DIMENSION AT TOP OF FOOTING.

(2) DIMENSION AT TOP OF PILASTER.

(3) ARCHITECTURAL CONCRETE TEXTURE (STRIATED RELIEF) WITH ARCHITECTURAL SURFACE FINISH (SINGLE COLOR). THE APPROXIMATE THICKNESS OF ARCHITECTURAL CONCRETE IS 0.35".

(4) MEMBRANE WATERPROOFING SYSTEM PER SPEC. 2481.3.B.

(5) CONSTRUCTION JOINT WITH 2" X 6" KEY.

(6) PERMISSIBLE CONSTRUCTION JOINT WITH 2" X 6" KEY CENTERED IN WALL.

(7) CONSTRUCTION JOINT WITH 2" X 4" KEY.

(8) 4" DIA. PERFORATED DRAIN PIPE. SEE DETAIL B910.

(9) 6" DIA. PIPE SLEEVE FOR DRAIN PIPE. SEE DETAIL B910. INVERT SLEEVE AT FRONT FACE OF ABUTMENT, EL. 897.22 WITH A MINIMUM SLOPE UP OF ⅛"/FT TO BACKFACE.

(10) 4" DIA. NON-PERFORATED DRAIN PIPE TO CONCRETE HEADWALL. SEE DETAIL B910.

(11) INSTALL STRAY CURRENT JUNCTION BOX. SEE DRAWINGS E0-SYS-CORR-DTL-001 TO 018 FOR DETAILS. CABLES WILL BE ROUTED TO JUNCTION BOXES BY CONTRACTOR. AFTER CONDUITS ARE INSTALLED, REMAINING BLOCKOUT SPACE TO BE FILLED AND SEALED WITH NON-SHRINK GROUT (TYP. FOR ALL BLOCKOUTS).

(12) 4" DIA. DRAIN. END FLUSH WITH SURFACE OF FRONT FACE. PLACE 1 FT. X 1 FT. SQUARE PIECE OF GEOTEXTILE FILTER TYPE VII OVER END OF DRAIN. INVERT DRAIN AT FRONT FACE OF ABUTMENT EL. 892.29 WITH A MINIMUM SLOPE UP OF ⅛"/FT TO BACKFACE.

NO.	DATE	BY	CHECK	DESIGN	REVISION / SUBMITTAL

DESIGNED BY: CJS CHECKED BY: DLS
DRAWN BY: KAG CHECKED BY: DLS

AECOM Kimley»Horn

90% SUBMISSION - 01/22/16

METROPOLITAN COUNCIL

SOUTHWEST Green Line LRT Extension

CIVIL - VOLUME 4D
MINNEHAHA CREEK LRT BRIDGE
BRIDGE R0689
WEST ABUTMENT DETAILS 2

DISCIPLINE: STRUCTURES

SHEET NAME: CBRR0689-BRG-ABT-002

SHEET 6 OF 45

Dec, 14 2015 01:04 pm V:\3400_ADC\CAD\SEGMENT E2\PLAN SHEETS\STRUCTURES\MNHA-LRT\CBRR0689-BRG-ABT-002.dwg By: Joe.Menapace

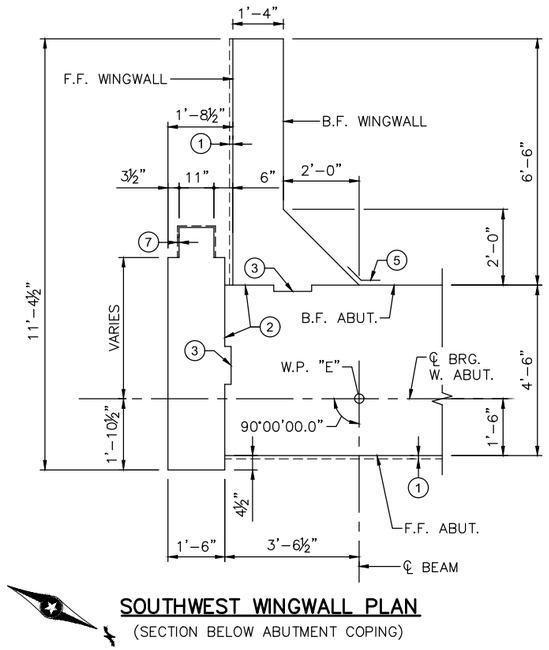

SOUTHWEST WINGWALL PLAN
(SECTION BELOW ABUTMENT COPING)

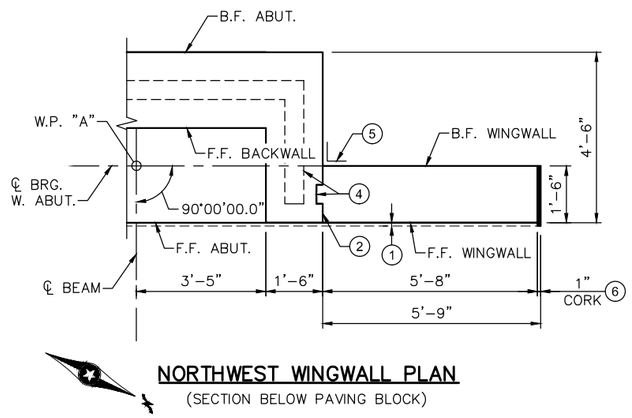

NORTHWEST WINGWALL PLAN
(SECTION BELOW PAVING BLOCK)

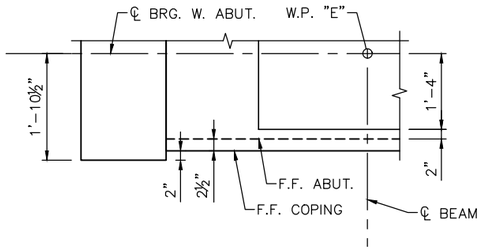

DETAIL "A"

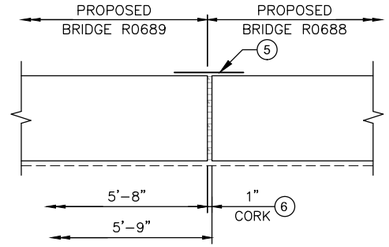

DETAIL "B"

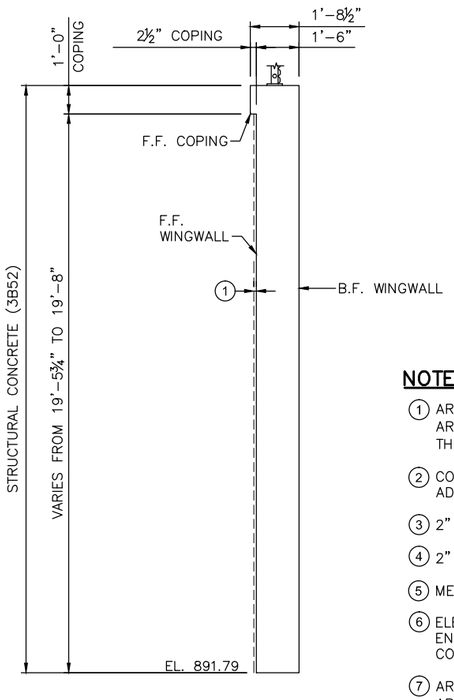

SECTION B–B

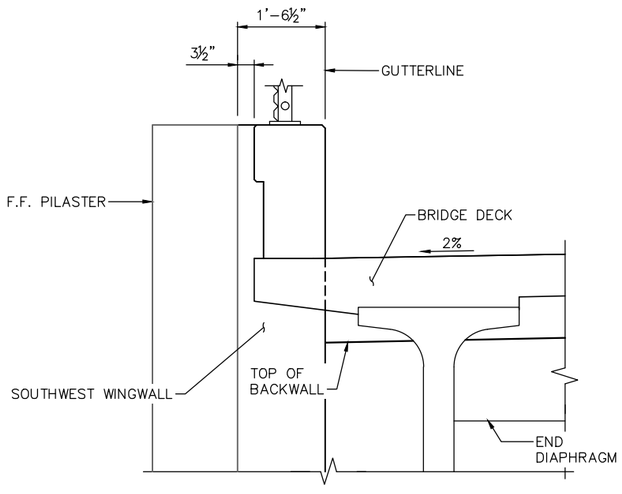

SOUTHWEST CORNER ELEVATION

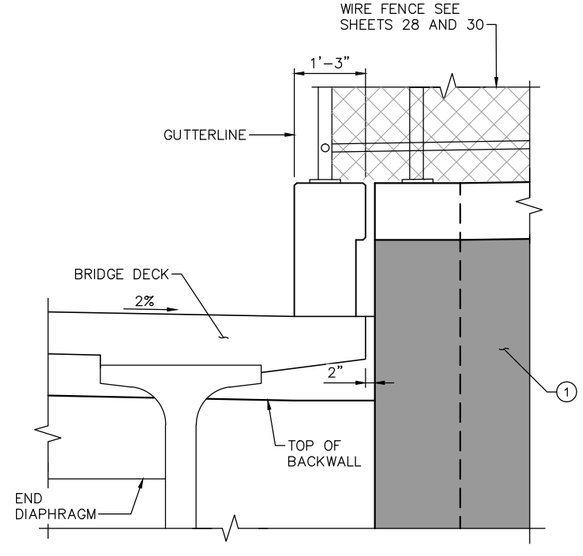

NORTHWEST CORNER ELEVATION

NOTES:

1. ARCHITECTURAL CONCRETE TEXTURE (STRIATED RELIEF) WITH ARCHITECTURAL SURFACE FINISH (SINGLE COLOR). THE APPROX. THICKNESS OF ARCHITECTURAL CONCRETE IS 0.35".
2. CONSTRUCTION JOINT. 72 HOUR TIME DELAY REQUIRED BETWEEN ADJACENT POURS TO ALLOW FOR SHRINKAGE.
3. 2" X 12" KEYWAY
4. 2" X 6" KEYWAY
5. MEMBRANE WATERPROOFING SYSTEM PER SPEC. 2481.3.B.
6. ELECTRICAL INSULATING CORK BARRIER. CONTRACTOR AND FIELD ENGINEER SHALL VERIFY WINGWALL CONCRETE IS SEPARATED AND CONDUCTIVE MATERIAL DOES NOT EXTEND THROUGH CORK.
7. ARCHITECTURAL CONCRETE TEXTURE (LIMESTONE) WITH ARCHITECTURAL SURFACE FINISH (SINGLE COLOR). THE APPROXIMATE THICKNESS OF ARCHITECTURAL CONCRETE IS 0.50"

NO.	DATE	BY	CHECK	DESIGN	REVISION / SUBMITTAL

DESIGNED BY: CJS CHECKED BY: DLS
DRAWN BY: KAG CHECKED BY: DLS

AECOM Kimley»Horn

90% SUBMISSION - 01/22/16

METROPOLITAN COUNCIL

SOUTHWEST Green Line LRT Extension

CIVIL - VOLUME 4D
MINNEHAHA CREEK LRT BRIDGE
BRIDGE R0689
WEST ABUTMENT DETAILS 3

DISCIPLINE: STRUCTURES
SHEET NAME: CBRR0689-BRG-ABT-003

SHEET 7 OF 45

Dec, 14 2015 01:05 pm V:\3400_ADC\CAD\SEGMENT E2\PLAN SHEETS\STRUCTURES\MNHA-LRT\CBRR0689-BRG-ABT-003.dwg By: Joe.Menapace

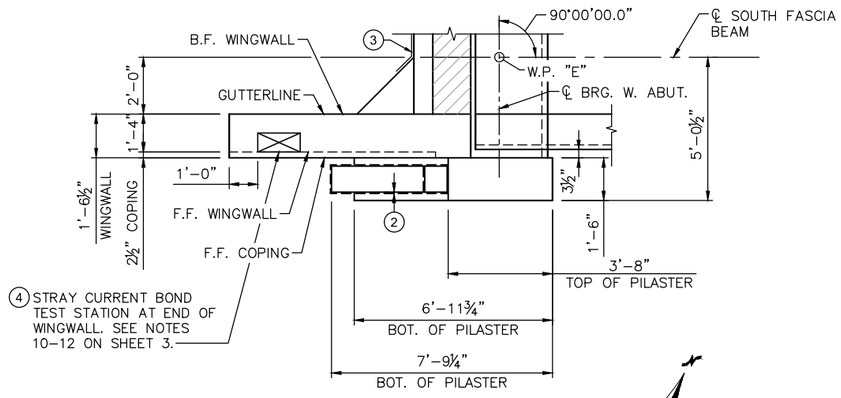

SOUTHWEST WINGWALL PLAN

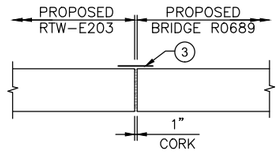

SECTION F-F

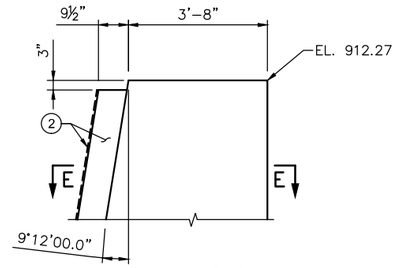

DETAIL "A"

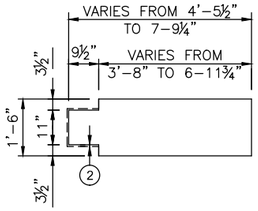

SECTION E-E

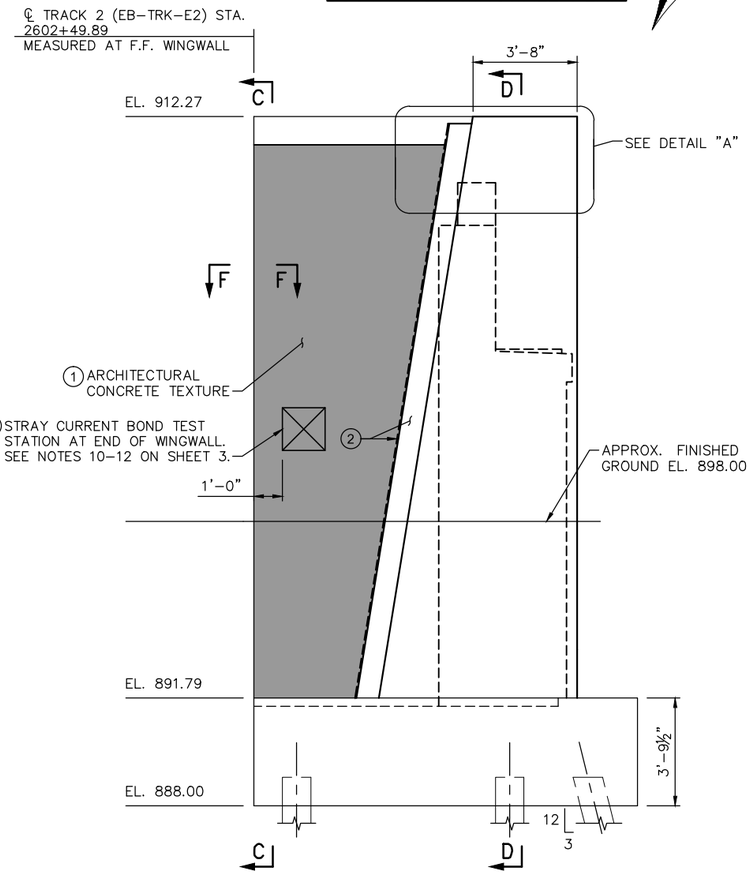

SOUTHWEST WINGWALL ELEVATION

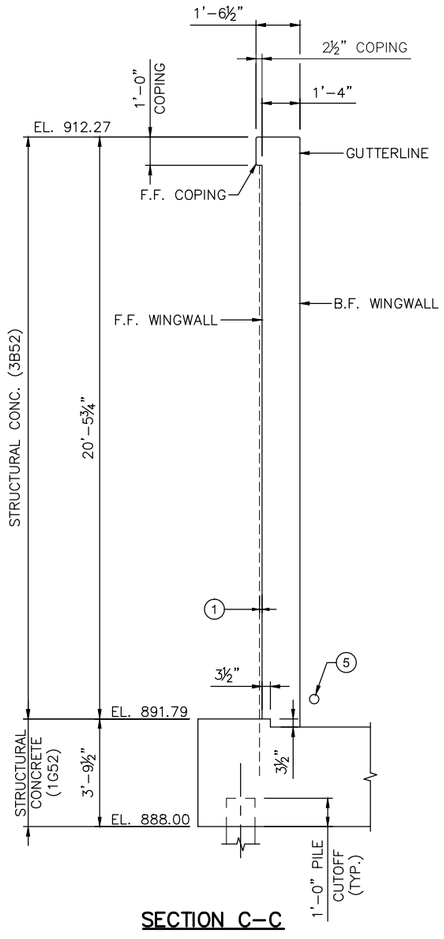

SECTION C-C

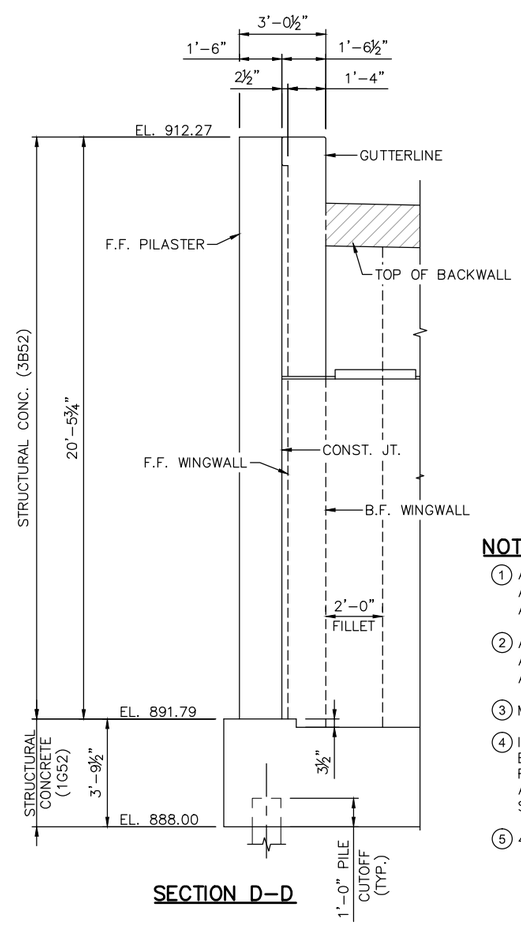

SECTION D-D

NOTES:

1. ARCHITECTURAL CONCRETE TEXTURE (STRIATED RELIEF) WITH ARCHITECTURAL SURFACE FINISH (SINGLE COLOR). THE APPROXIMATE THICKNESS OF ARCHITECTURAL CONCRETE IS 0.35".
2. ARCHITECTURAL CONCRETE TEXTURE (LIMESTONE) WITH ARCHITECTURAL SURFACE FINISH (SINGLE COLOR). THE APPROXIMATE THICKNESS OF ARCHITECTURAL CONCRETE IS 0.50".
3. MEMBRANE WATERPROOFING SYSTEM PER SPEC. 2481.3.B.
4. INSTALL STRAY CURRENT JUNCTION BOX. SEE DRAWINGS E0-SYS-CORR-DTL-001 TO 018 FOR DETAILS. CABLES WILL BE ROUTED TO JUNCTION BOXES BY CONTRACTOR. AFTER CONDUITS ARE INSTALLED, REMAINING BLOCKOUT SPACE TO BE FILLED AND SEALED WITH NON-SHRINK GROUT (TYP. FOR ALL BLOCKOUTS).
5. 4" DIA. PERFORATED DRAIN PIPE. SEE DETAIL B910.

NO.	DATE	BY	CHECK	DESIGN	REVISION / SUBMITTAL

DESIGNED BY: CJS | CHECKED BY: DLS
DRAWN BY: KAG | CHECKED BY: DLS

AECOM Kimley»Horn

90% SUBMISSION - 01/22/16

METROPOLITAN COUNCIL

SOUTHWEST Green Line LRT Extension

CIVIL - VOLUME 4D
MINNEHAHA CREEK LRT BRIDGE
BRIDGE R0689
WEST ABUTMENT DETAILS 4

DISCIPLINE: STRUCTURES
SHEET NAME: CBRR0689-BRG-ABT-004

SHEET 8 OF 45

Dec, 14 2015 01:05 pm V:\3400_ADC\CAD\SEGMENT E2\PLAN SHEETS\STRUCTURES\MNHA-LRT\CBRR0689-BRG-ABT-004.dwg By: Joe.Menapace

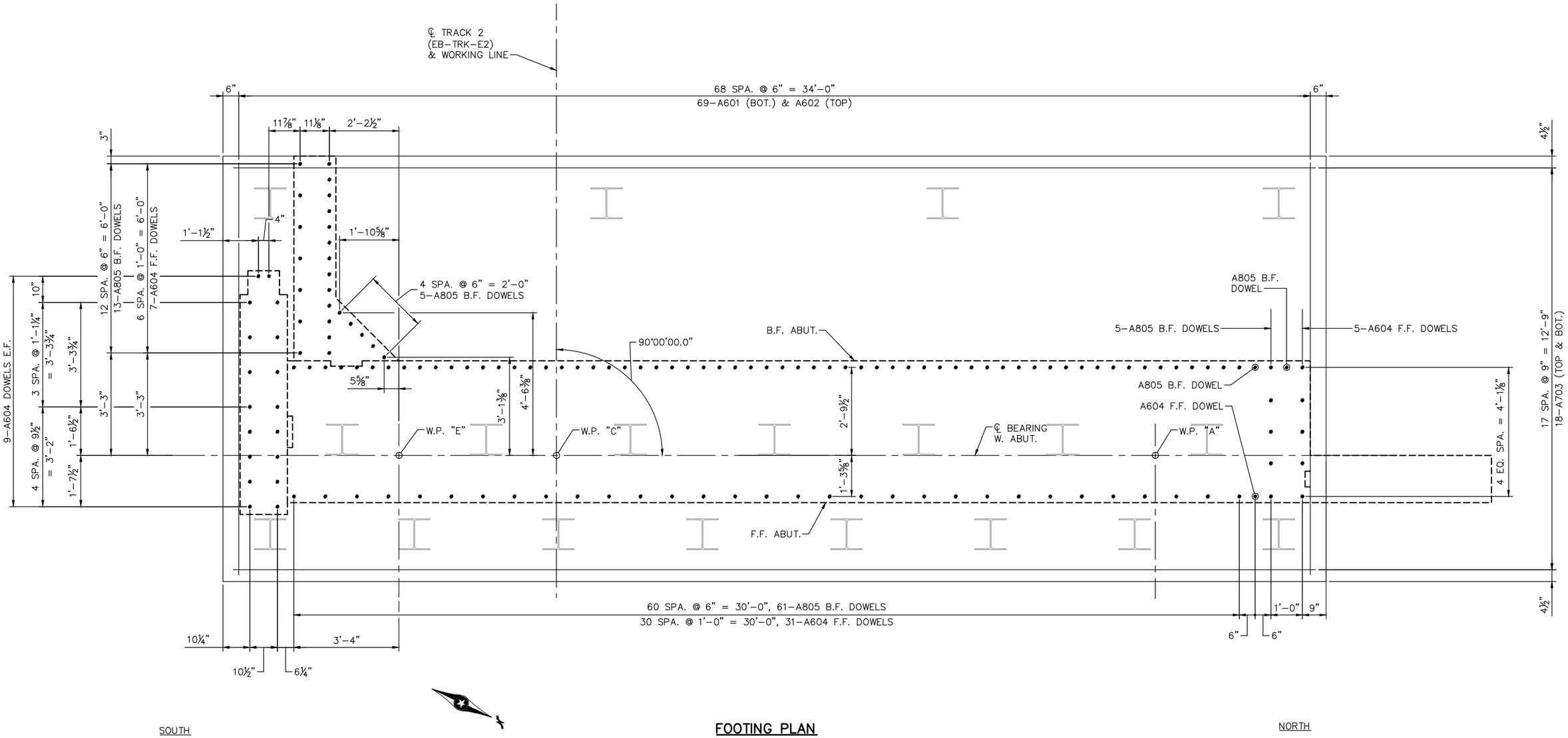

FOOTING PLAN

NO.	DATE	BY	CHECK	DESIGN	REVISION / SUBMITTAL

DESIGNED BY: CJS | CHECKED BY: DLS
DRAWN BY: JFM | CHECKED BY: DLS

AECOM Kimley»Horn

90% SUBMISSION - 01/22/16

METROPOLITAN COUNCIL

SOUTHWEST Green Line LRT Extension

CIVIL - VOLUME 4D
MINNEHAHA CREEK LRT BRIDGE
BRIDGE R0689
WEST ABUTMENT REINFORCEMENT 1

DISCIPLINE: STRUCTURES
SHEET NAME: CBRR0689-BRG-ABT-005

SHEET 9 OF 45

Dec, 14 2015 01:06 pm V:\3400_ADC\CAD\SEGMENT E2\PLAN SHEETS\STRUCTURES\MNHA-LRT\CBRR0689-BRG-ABT-005.dwg By: Joe.Menapace

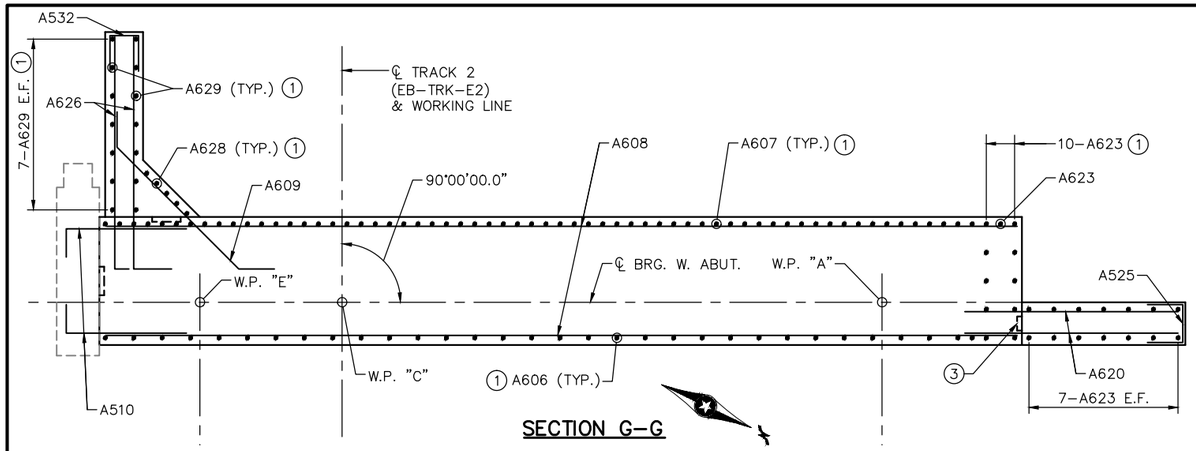

SECTION G-G

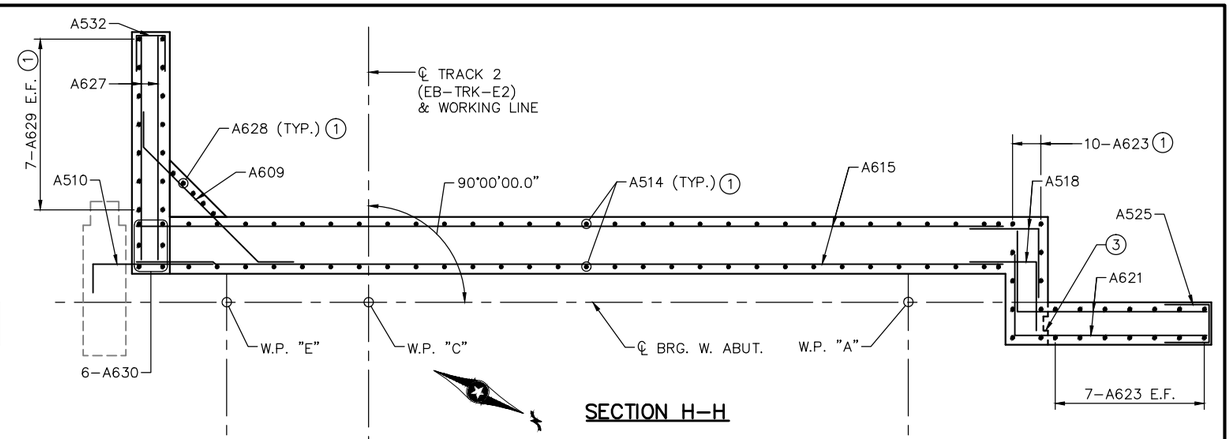

SECTION H-H

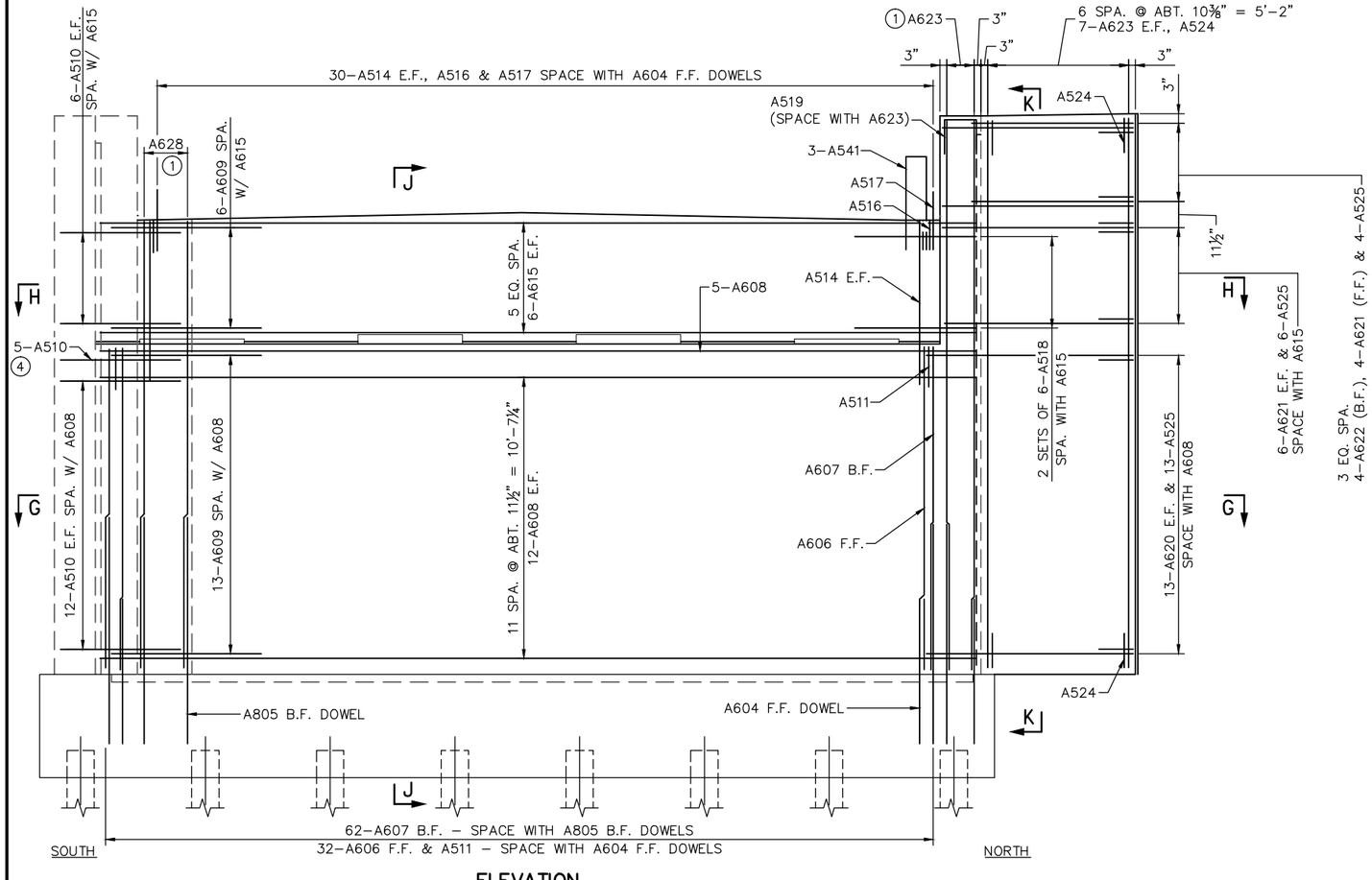

ELEVATION

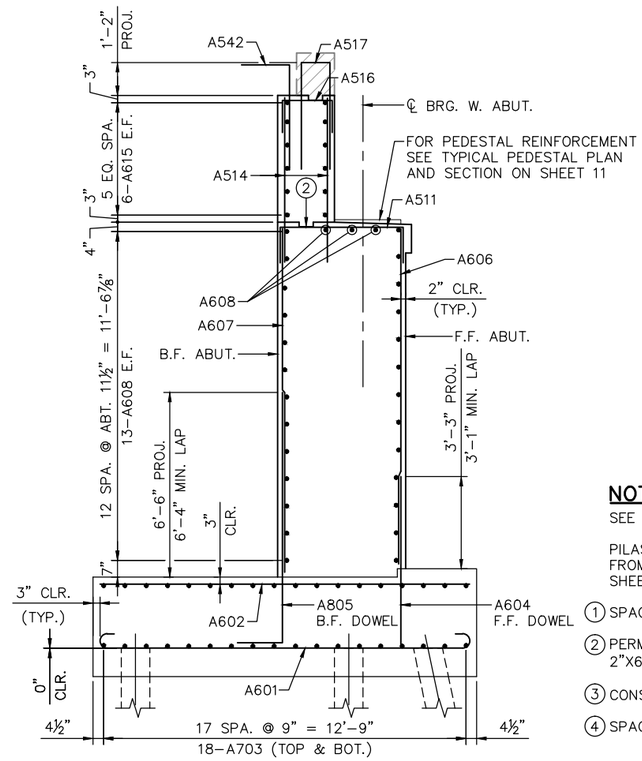

SECTION J-J

NOTES:

SEE SHEET 11 FOR SECTION K-K.

PILASTER REINFORCEMENT EXCLUDED FROM THIS SHEET FOR CLARITY. SEE SHEET 12.

(1) SPACE WITH DOWEL BARS.

(2) PERMISSIBLE CONST. JOINT WITH 2"X6" KEYWAY

(3) CONST. JOINT WITH 2"X6" KEYWAY

(4) SPACE WITH A608 BARS.

NO.	DATE	BY	CHECK	DESIGN	REVISION / SUBMITTAL

DESIGNED BY: CJS | CHECKED BY: DLS
DRAWN BY: JFM | CHECKED BY: DLS

AECOM Kimley»Horn

90% SUBMISSION - 01/22/16

METROPOLITAN COUNCIL

SOUTHWEST Green Line LRT Extension

CIVIL - VOLUME 4D
MINNEHAHA CREEK LRT BRIDGE
BRIDGE R0689
WEST ABUTMENT REINFORCEMENT 2

DISCIPLINE: STRUCTURES

SHEET NAME: CBRR0689-BRG-ABT-006

SHEET 10 OF 45

Dec, 14 2015 01:06 pm V:\3400_ADC\CAD\SEGMENT E2\PLAN SHEETS\STRUCTURES\MNHA-LRT\CBRR0689-BRG-ABT-006.dwg By: Joe.Menapace

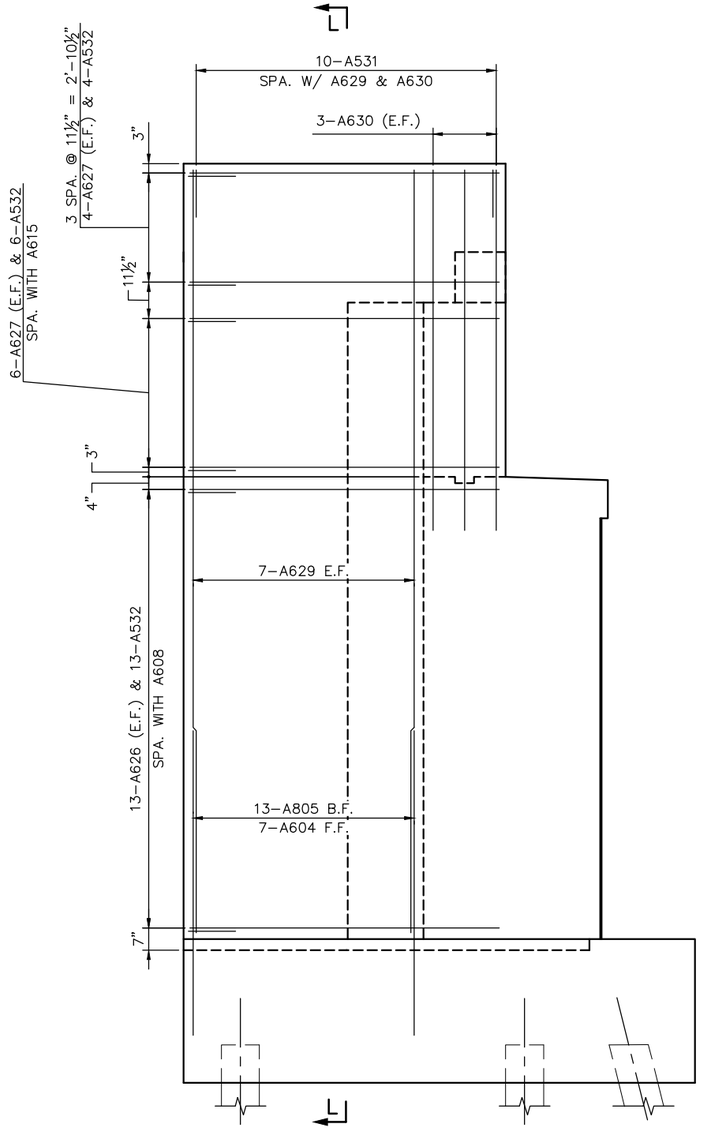

SOUTHWEST WINGWALL ELEVATION

(PILASTER NOT SHOWN FOR CLARITY)

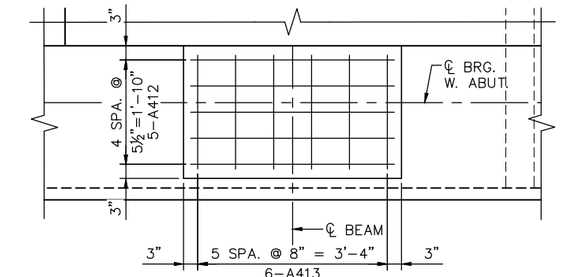

TYPICAL PEDESTAL PLAN

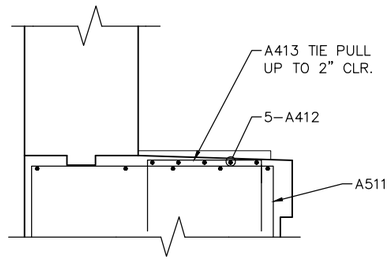

TYPICAL PEDESTAL SECTION

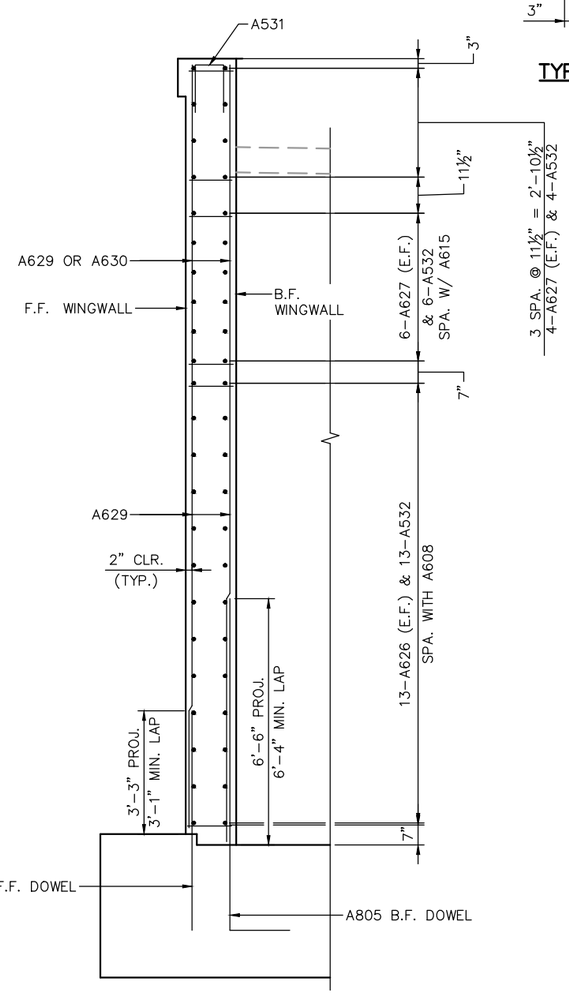

SECTION L–L

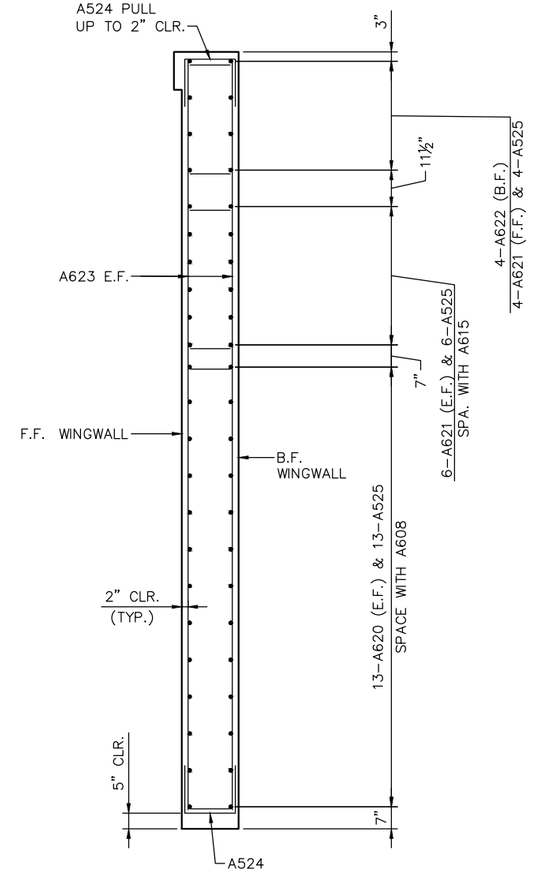

SECTION K–K

NO.	DATE	BY	CHECK	DESIGN	REVISION / SUBMITTAL

DESIGNED BY: CJS | CHECKED BY: DLS

DRAWN BY: JFM | CHECKED BY: DLS

AECOM Kimley»Horn

90% SUBMISSION - 01/22/16

METROPOLITAN COUNCIL

SOUTHWEST Green Line LRT Extension

CIVIL - VOLUME 4D
MINNEHAHA CREEK LRT BRIDGE
BRIDGE R0689
WEST ABUTMENT REINFORCEMENT 3

DISCIPLINE: STRUCTURES

SHEET NAME: CBRR0689-BRG-ABT-007

SHEET 11 OF 45

Dec, 14 2015 01:07 pm V:\3400_ADC\CAD\SEGMENT E2\PLAN SHEETS\STRUCTURES\MNHA-LRT\CBRR0689-BRG-ABT-007.dwg By: Joe.Menapace

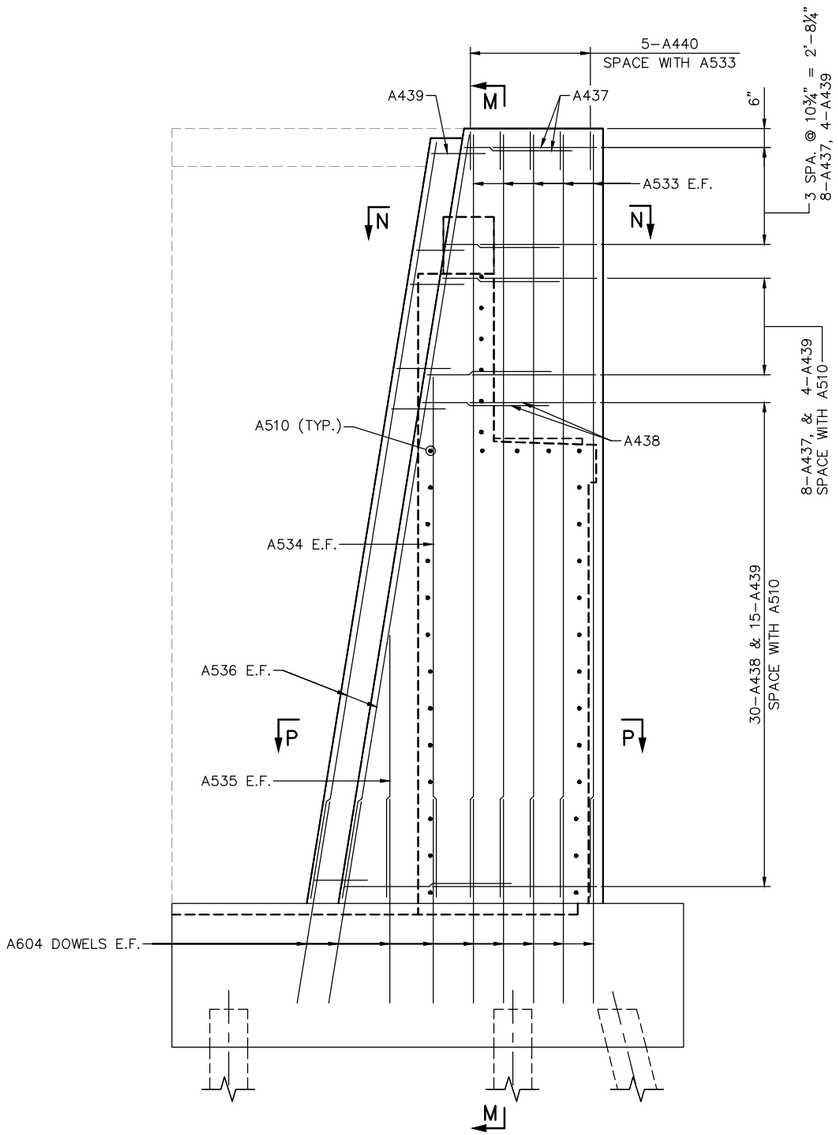

SOUTHWEST PILASTER ELEVATION

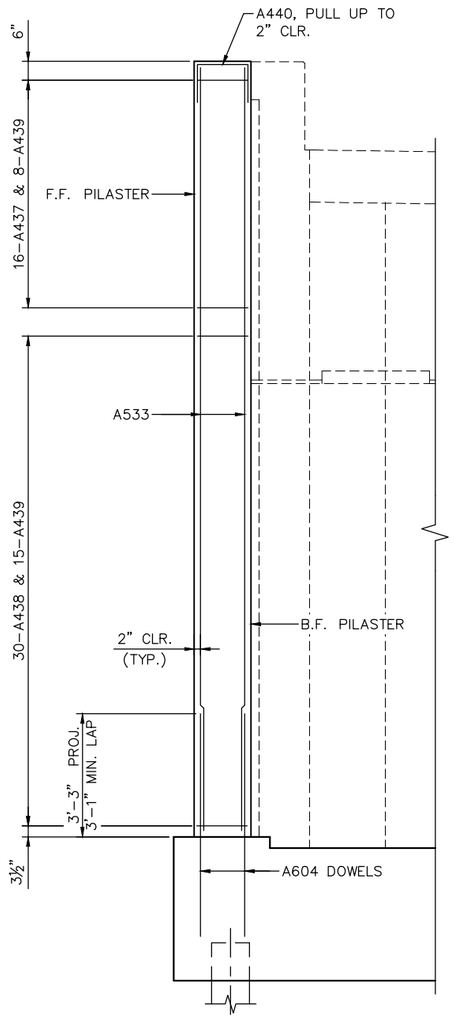

SECTION M–M

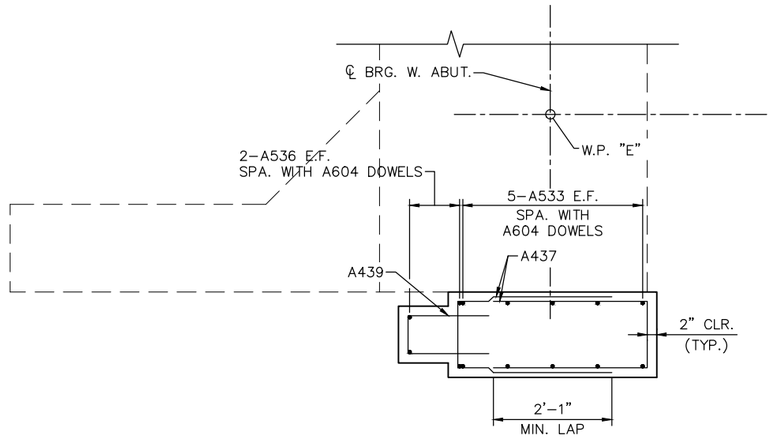

SECTION N–N

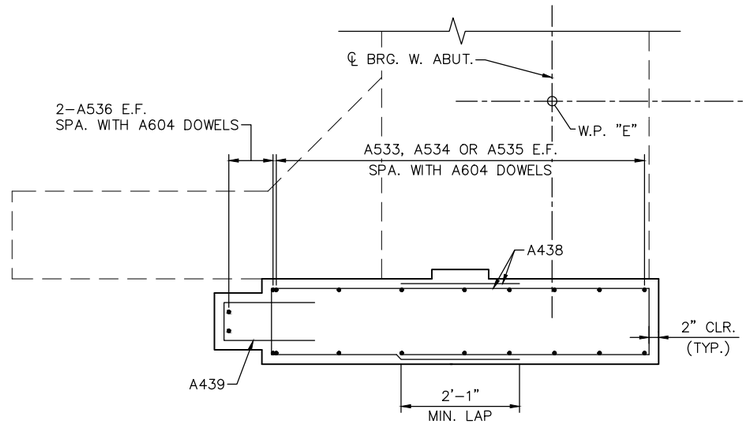

SECTION P–P

NO.	DATE	BY	CHECK	DESIGN	REVISION / SUBMITTAL

DESIGNED BY: CJS | CHECKED BY: DLS
DRAWN BY: JFM | CHECKED BY: DLS

AECOM Kimley»Horn

90% SUBMISSION - 01/22/16

METROPOLITAN COUNCIL

SOUTHWEST Green Line LRT Extension

CIVIL - VOLUME 4D
MINNEHAHA CREEK LRT BRIDGE
BRIDGE R0689
WEST ABUTMENT REINFORCEMENT 4

DISCIPLINE: STRUCTURES
SHEET NAME: CBRR0689-BRG-ABT-008

SHEET 12 OF 45

Dec, 14 2015 01:08 pm V:\3400_ADC\CAD\SEGMENT E2\PLAN SHEETS\STRUCTURES\MNHA-LRT\CBRR0689-BRG-ABT-008.dwg By: Joe.Menapace

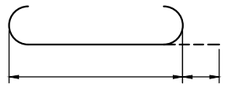

A601

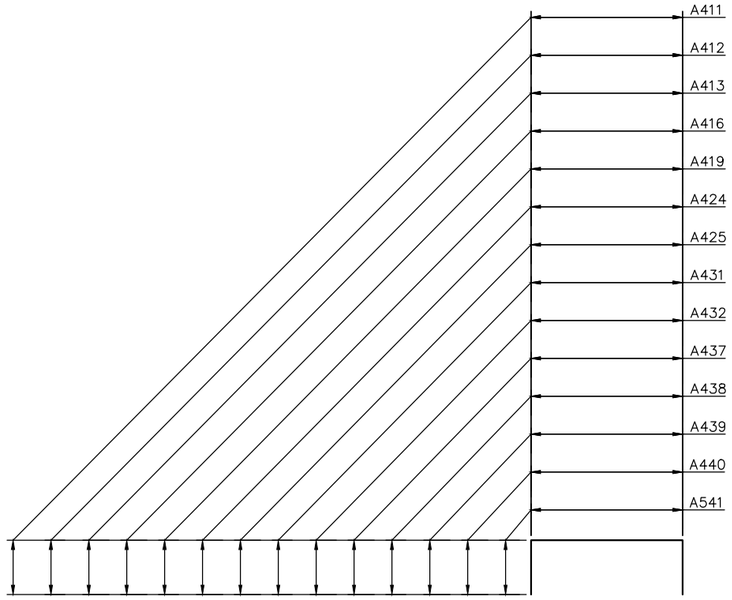

A511, A412, A413, A516, A519, A524, A525, A531, A532, A437, A438, A439, A440, & A541

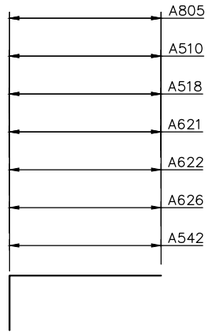

A805, A510, A518, A621, A622, A626, & A542

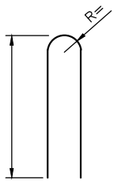

A517

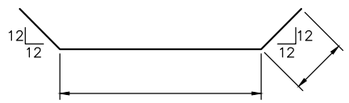

A609

BILL OF REINFORCEMENT FOR WEST ABUTMENT

BAR	NO.	LENGTH	SHAPE	LOCATION
A601	0	'-"	BENT	FOOTING, BOT., TRANS.
A602	0	'-"	STR.	FOOTING, TOP, TRANS.
A703	0	'-"	STR.	FOOTING, LONG.
A604	0	'-"	STR.	F.F. DOWELS
A805	0	'-"	BENT	B.F. DOWELS
A606	0	'-"	STR.	F.F. STEM VERT.
A607	0	'-"	STR.	B.F. STEM VERT.
A608	0	'-"	STR.	STEM LONG.
A609	0	'-"	BENT	B.F. FILLET LONG.
A510	0	'-"	BENT	PILASTER DOWEL LONG.
A511	0	'-"	BENT	STEM TIE
A412	0	'-"	BENT	PEDESTAL TIE
A413	0	'-"	BENT	PEDESTAL TIE
A514	0	'-"	STR.	BACKWALL VERT.
A615	0	'-"	STR.	BACKWALL LONG.
A516	0	'-"	BENT	BACKWALL TIE
A517	0	'-"	BENT	PAVING BLOCK TIE
A518	0	'-"	BENT	MASKWALL LONG. BACKWALL DOWEL
A519	0	'-"	BENT	MASKWALL TOP TIE
A620	0	'-"	STR.	N WINGWALL LONG.
A621	0	'-"	BENT	N WINGWALL LONG.
A622	0	'-"	BENT	N WINGWALL LONG.
A623	0	'-"	STR.	N WINGWALL VERT.
A524	0	'-"	BENT	N WINGWALL TIE
A525	0	'-"	BENT	N WINGWALL END TIE
A626	0	'-"	BENT	S WINGWALL LONG.
A627	0	'-"	STR.	S WINGWALL LONG.
A628	0	'-"	STR.	B.F. FILLET VERT.
A629	0	'-"	STR.	S WINGWALL VERT.
A630	0	'-"	STR.	S WINGWALL VERT.
A531	0	'-"	BENT	S WINGWALL TIE
A532	0	'-"	BENT	S WINGWALL END TIE
A533	0	'-"	STR.	PILASTER VERT.
A534	0	'-"	STR.	PILASTER VERT.
A535	0	'-"	STR.	PILASTER VERT.
A536	0	'-"	STR.	PILASTER DIAG.
A437	0	'-"	BENT	PILASTER TIE
A438	0	'-"	BENT	PILASTER TIE
A439	0	'-"	BENT	PILASTER TIE
A440	0	'-"	BENT	PILASTER TOP TIE
A541	0	'-"	BENT	PARAPET TIE
A542	0	'-"	BENT	TRANSITION SLAB TIE

NO.	DATE	BY	CHECK	DESIGN	REVISION / SUBMITTAL

DESIGNED BY: CJS | CHECKED BY: DLS
DRAWN BY: JFM | CHECKED BY: DLS

AECOM Kimley»Horn

90% SUBMISSION - 01/22/16

METROPOLITAN COUNCIL

SOUTHWEST Green Line LRT Extension

CIVIL - VOLUME 4D
MINNEHAHA CREEK LRT BRIDGE
BRIDGE R0689
WEST ABUTMENT REINFORCEMENT 5

DISCIPLINE: STRUCTURES
SHEET NAME: CBRR0689-BRG-ABT-009

SHEET 13 OF 45

Dec, 14 2015 01:08 pm V:\3400_ADC\CAD\SEGMENT E2\PLAN SHEETS\STRUCTURES\MNHA-LRT\CBRR0689-BRG-ABT-009.dwg By: Joe.Menapace

EAST ABUTMENT COMPUTED PILE LOAD - TONS/PILE	
FACTORED DEAD LOAD + EARTH PRESSURE	94.0
FACTORED LIVE LOAD	41.2
* FACTORED DESIGN LOAD	135.2

* BASED ON STRENGTH I LOAD COMBINATION.

EAST ABUTMENT REQUIRED NOMINAL PILE BEARING RESISTANCE FOR H-PILES Rn - TONS/PILE		
FIELD CONTROL METHOD	φdyn	* Rn
MN/DOT PILE FORMULA 2012 (MPF12) $R_n = 20\sqrt{\frac{W\,x\,H}{1000}}\,x log\left(\frac{10}{S}\right)$	0.60	226
PDA	0.65	208

* Rn = (FACTORED DESIGN LOAD) / φdyn

GENERAL PILE NOTES

1 HP12x53 STEEL TEST PILE 75 FT. LONG
12 HP12x53 STEEL PILES EST. 75 FT. LENGTH
13 HP12x53 STEEL PILES REQ'D FOR EAST ABUT.

ALL PILES TO BE HP12x53 WITH PILE TIP PROTECTION.

PILE SPACING SHOWN IS AT BOTTOM OF FOOTING.

PILES MARKED THUS ⊣ TO BE BATTERED 3" PER FOOT IN DIRECTION SHOWN.

FOR PILE SPLICE DETAILS SEE DETAIL B202.

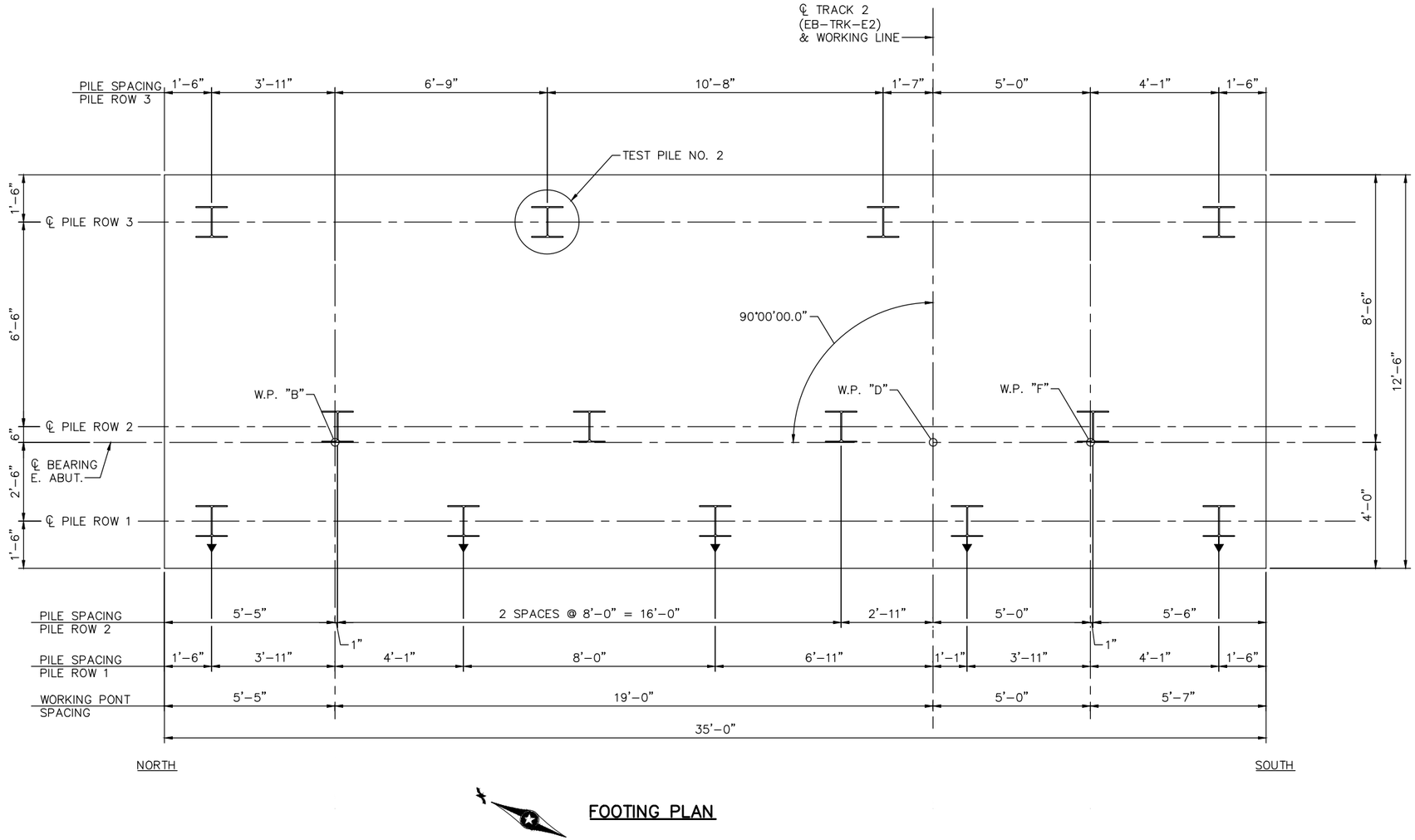

FOOTING PLAN

NO.	DATE	BY	CHECK	DESIGN	REVISION / SUBMITTAL

DESIGNED BY: CJS CHECKED BY: DLS
DRAWN BY: KAG CHECKED BY: DLS

AECOM Kimley»Horn

90% SUBMISSION - 01/22/16

METROPOLITAN COUNCIL

SOUTHWEST Green Line LRT Extension

CIVIL - VOLUME 4D
MINNEHAHA CREEK LRT BRIDGE
BRIDGE R0689
EAST ABUTMENT DETAILS 1

DISCIPLINE: STRUCTURES
SHEET NAME: CBRR0689-BRG-ABT-010

SHEET 14 OF 45

Dec, 14 2015 01:09 pm V:\3400_ADC\CAD\SEGMENT E2\PLAN SHEETS\STRUCTURES\MNHA-LRT\CBRR0689-BRG-ABT-010.dwg By: Joe.Menapace

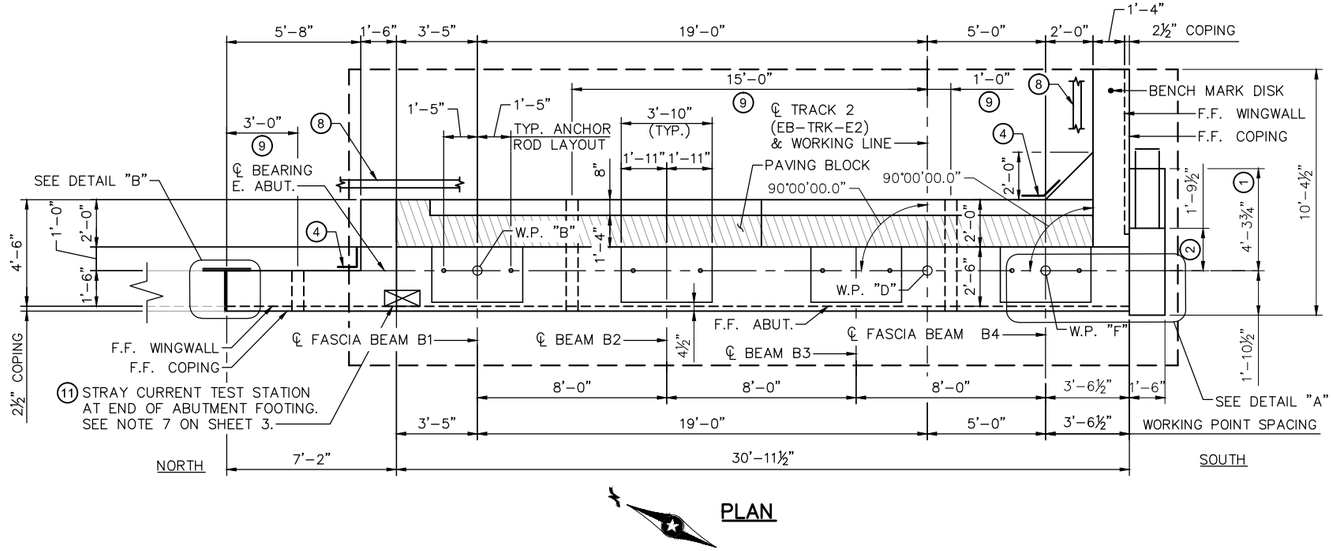

PLAN

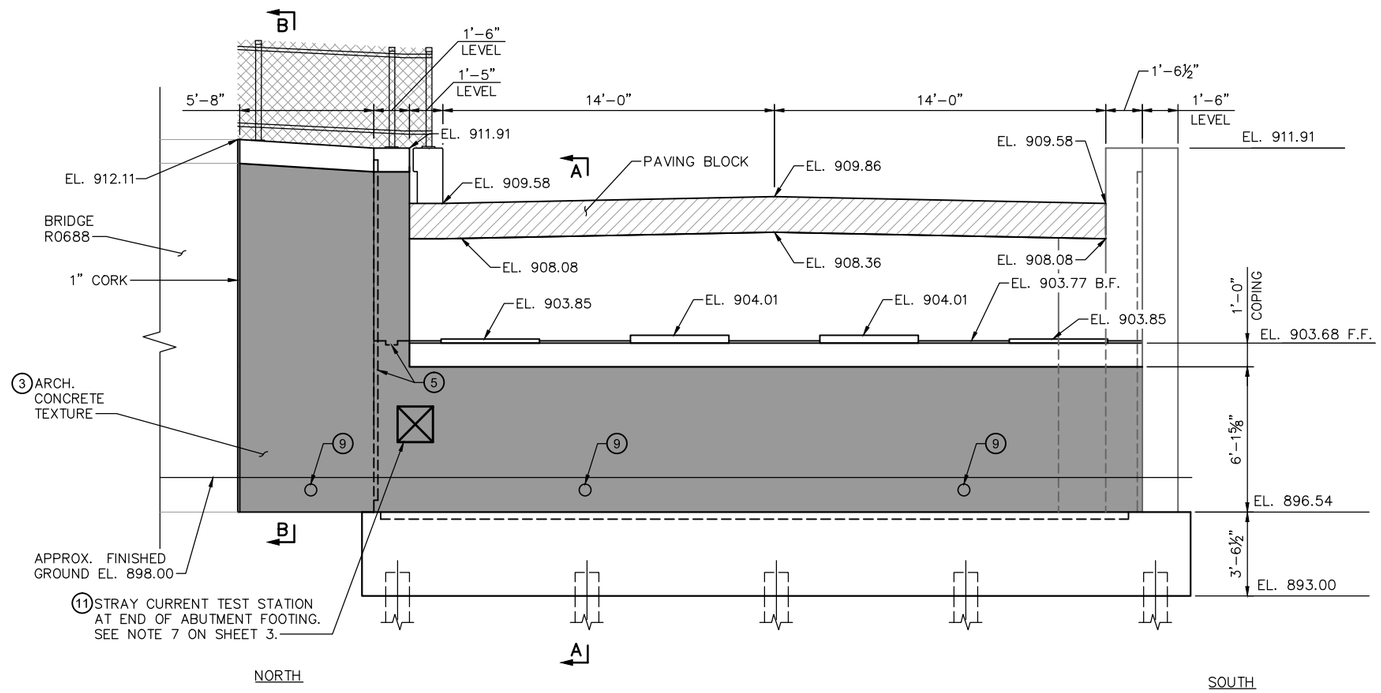

ELEVATION

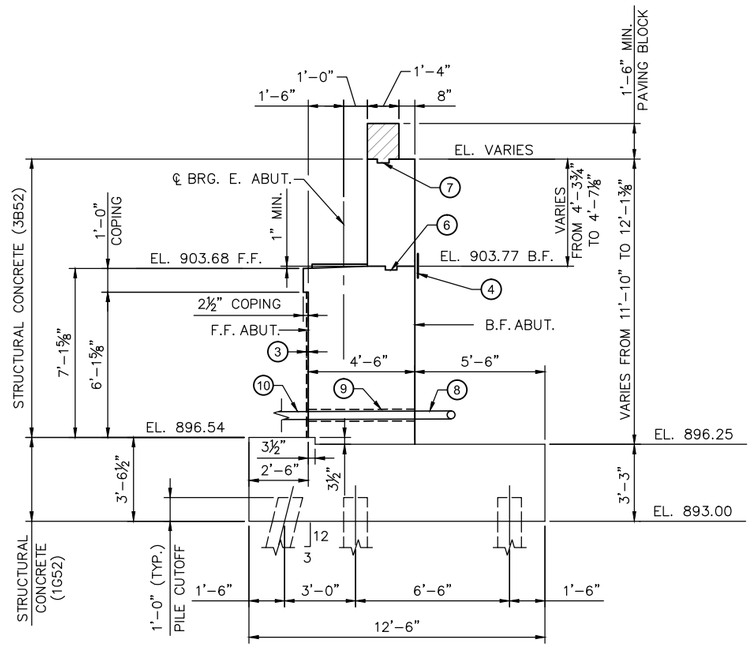

SECTION A–A

NOTES:

PAVING BLOCK HATCHED AREA INDICATES THAT PORTION TO BE PLACED WITH THE SUPERSTRUCTURE CONCRETE.

SEE SHEET 16 FOR SECTION B–B AND DETAILS "A" AND "B".

1. DIMENSION AT TOP OF FOOTING.
2. DIMENSION AT TOP OF PILASTER.
3. ARCHITECTURAL CONCRETE TEXTURE (STRIATED RELIEF) WITH ARCHITECTURAL SURFACE FINISH (SINGLE COLOR). THE APPROXIMATE THICKNESS OF ARCHITECTURAL CONCRETE IS 0.35".
4. MEMBRANE WATERPROOFING SYSTEM PER SPEC. 2481.3.B.
5. CONSTRUCTION JOINT WITH 2" X 6" KEY.
6. PERMISSIBLE CONSTRUCTION JOINT WITH 2" X 6" KEY CENTERED IN WALL.
7. CONSTRUCTION JOINT WITH 2" X 4" KEY.
8. 4" DIA. PERFORATED DRAIN PIPE. SEE DETAIL B910.
9. 6" DIA. PIPE SLEEVE FOR DRAIN PIPE. SEE DETAIL B910. INVERT SLEEVE AT FRONT FACE OF ABUTMENT, EL. 897.22 WITH A MINIMUM SLOPE UP OF ⅛"/FT TO BACKFACE.
10. 4" DIA. NON-PERFORATED DRAIN PIPE TO CONCRETE HEADWALL. SEE DETAIL B910.
11. INSTALL STRAY CURRENT JUNCTION BOX. SEE DRAWINGS E0-SYS-CORR-DTL-001 TO 018 FOR DETAILS. CABLES WILL BE ROUTED TO JUNCTION BOXES BY CONTRACTOR. AFTER CONDUITS ARE INSTALLED, REMAINING BLOCKOUT SPACE TO BE FILLED AND SEALED WITH NON-SHRINK GROUT (TYP. FOR ALL BLOCKOUTS).

NO.	DATE	BY	CHECK	DESIGN	REVISION / SUBMITTAL

DESIGNED BY: CJS | CHECKED BY: DLS
DRAWN BY: KAG | CHECKED BY: DLS

AECOM Kimley»Horn

90% SUBMISSION - 01/22/16

METROPOLITAN COUNCIL

SOUTHWEST Green Line LRT Extension

CIVIL - VOLUME 4D
MINNEHAHA CREEK LRT BRIDGE
BRIDGE R0689
EAST ABUTMENT DETAILS 2

DISCIPLINE: STRUCTURES
SHEET NAME: CBRR0689-BRG-ABT-011

SHEET 15 OF 45

Dec, 14 2015 01:09 pm V:\3400_ADC\CAD\SEGMENT E2\PLAN SHEETS\STRUCTURES\MNHA-LRT\CBRR0689-BRG-ABT-011.dwg By: Joe.Menapace

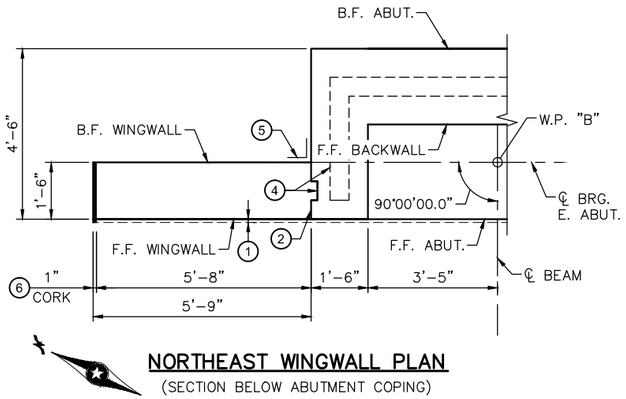

NORTHEAST WINGWALL PLAN
(SECTION BELOW ABUTMENT COPING)

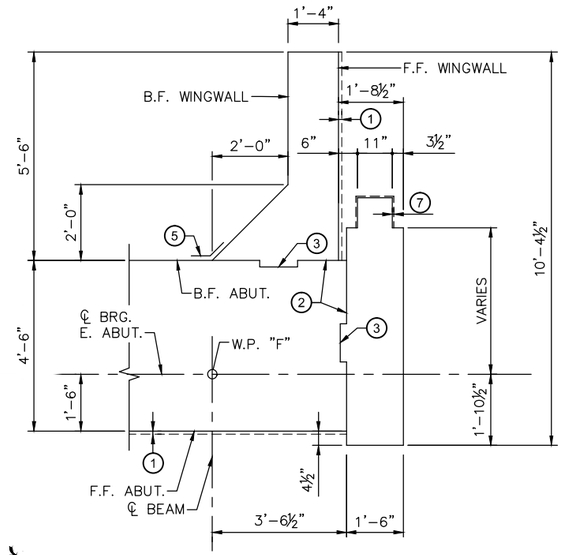

SOUTHEAST WINGWALL PLAN
(SECTION BELOW PAVING BLOCK)

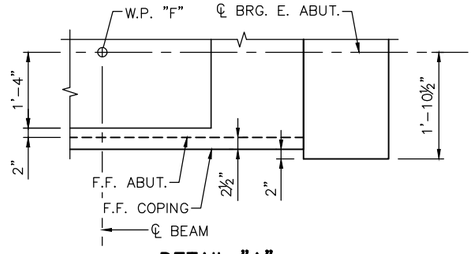

DETAIL "A"

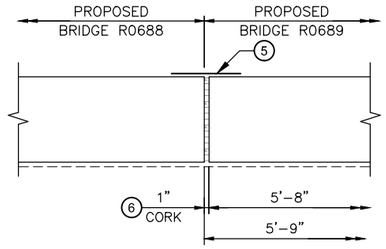

DETAIL "B"

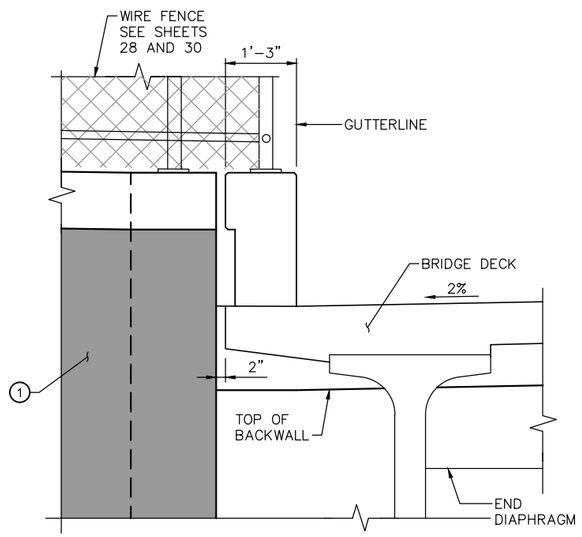

NORTHEAST CORNER ELEVATION

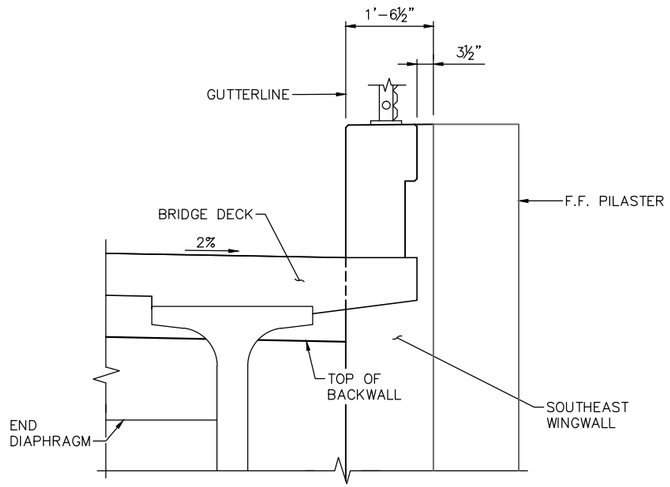

SOUTHEAST CORNER ELEVATION

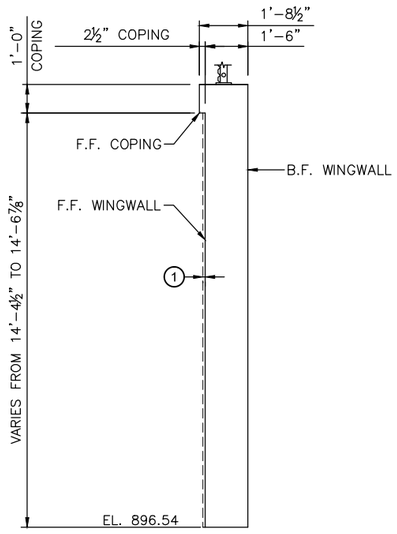

SECTION B–B

NOTES:

1. ARCHITECTURAL CONCRETE TEXTURE (STRIATED RELIEF) WITH ARCHITECTURAL SURFACE FINISH (SINGLE COLOR). THE APPROX. THICKNESS OF ARCHITECTURAL CONCRETE IS 0.35".
2. CONSTRUCTION JOINT. 72 HOUR TIME DELAY REQUIRED BETWEEN ADJACENT POURS TO ALLOW FOR SHRINKAGE.
3. 2" X 12" KEYWAY
4. 2" X 6" KEYWAY
5. MEMBRANE WATERPROOFING SYSTEM PER SPEC. 2481.3.B.
6. ELECTRICAL INSULATING CORK BARRIER. CONTRACTOR AND FIELD ENGINEER SHALL VERIFY WINGWALL CONCRETE IS SEPARATED AND CONDUCTIVE MATERIAL DOES NOT EXTEND THROUGH CORK.
7. ARCHITECTURAL CONCRETE TEXTURE (LIMESTONE) WITH ARCHITECTURAL SURFACE FINISH (SINGLE COLOR). THE APPROXIMATE THICKNESS OF ARCHITECTURAL CONCRETE IS 0.50".

NO.	DATE	BY	CHECK	DESIGN	REVISION / SUBMITTAL

DESIGNED BY: CJS | CHECKED BY: DLS
DRAWN BY: KAG | CHECKED BY: DLS

AECOM Kimley»Horn

90% SUBMISSION - 01/22/16

METROPOLITAN COUNCIL

SOUTHWEST Green Line LRT Extension

CIVIL - VOLUME 4D
MINNEHAHA CREEK LRT BRIDGE
BRIDGE R0689
EAST ABUTMENT DETAILS 3

DISCIPLINE: STRUCTURES
SHEET NAME: CBRR0689-BRG-ABT-012

SHEET 16 OF 45

Dec. 14 2015 01:10 pm V:\3400_ADC\CAD\SEGMENT E2\PLAN SHEETS\STRUCTURES\MNHA-LRT\CBRR0689-BRG-ABT-012.dwg By: Joe.Menapace

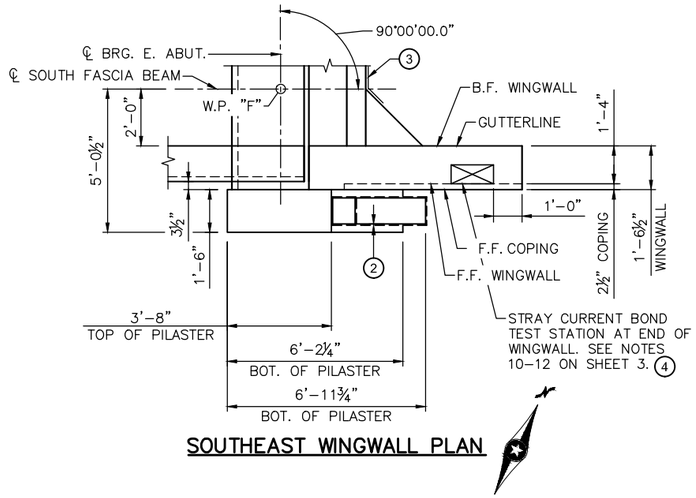

SOUTHEAST WINGWALL PLAN

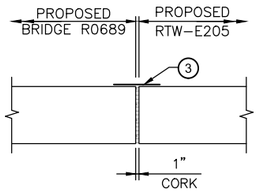

SECTION F-F

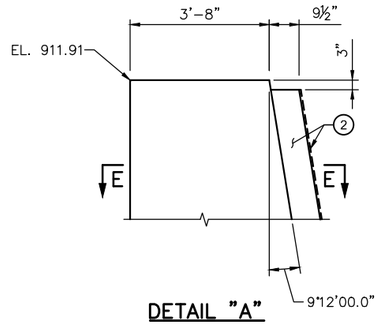

DETAIL "A"

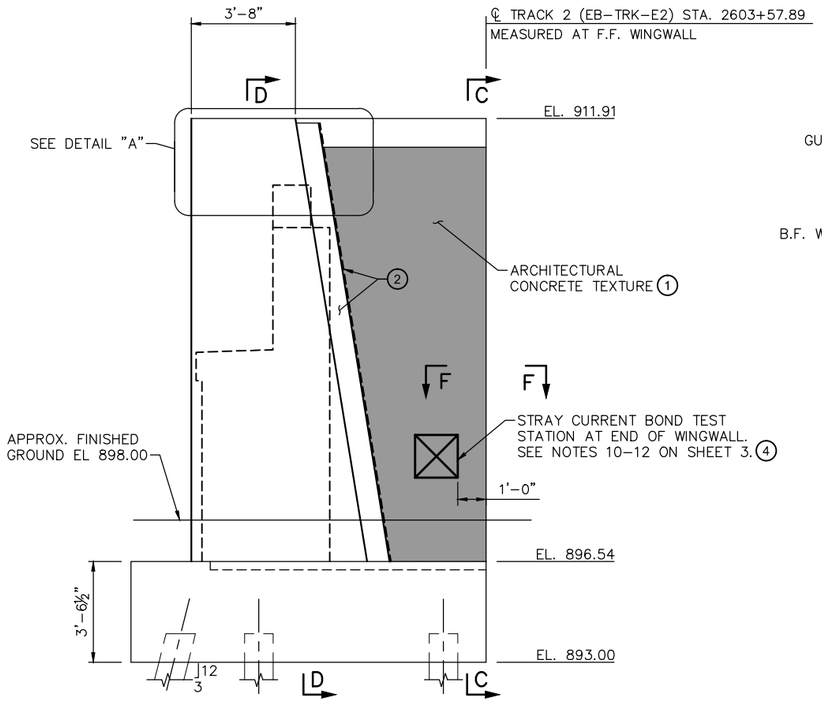

SOUTHEAST WINGWALL ELEVATION

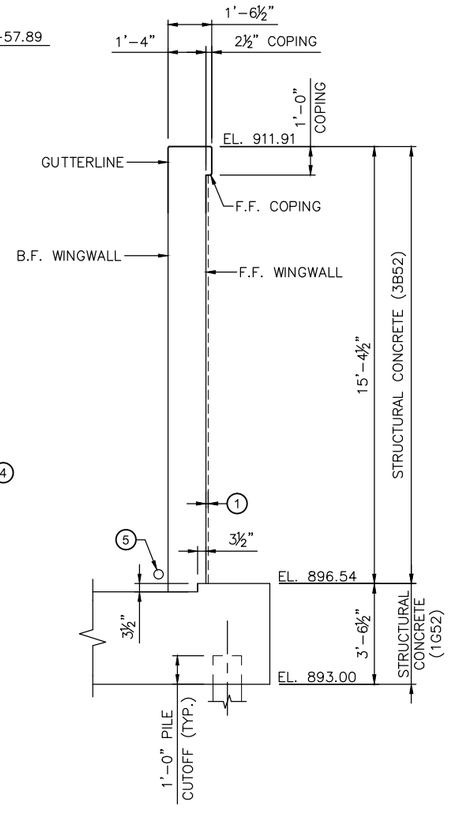

SECTION C-C

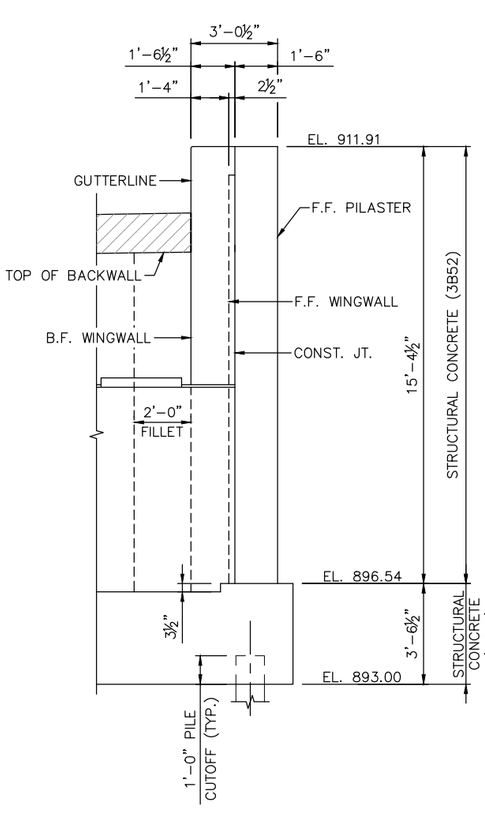

SECTION D-D

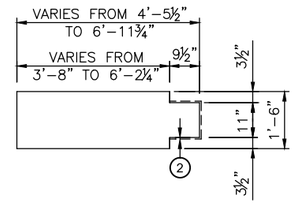

SECTION E-E

NOTES:

1. ARCHITECTURAL CONCRETE TEXTURE (STRIATED RELIEF) WITH ARCHITECTURAL SURFACE FINISH (SINGLE COLOR). THE APPROXIMATE THICKNESS OF ARCHITECTURAL CONCRETE IS 0.35".
2. ARCHITECTURAL CONCRETE TEXTURE (LIMESTONE) WITH ARCHITECTURAL SURFACE FINISH (SINGLE COLOR). THE APPROXIMATE THICKNESS OF ARCHITECTURAL CONCRETE IS 0.50".
3. MEMBRANE WATERPROOFING SYSTEM PER SPEC. 2481.3.B.
4. INSTALL STRAY CURRENT JUNCTION BOX. SEE DRAWINGS E0-SYS-CORR-DTL-001 TO 018 FOR DETAILS. CABLES WILL BE ROUTED TO JUNCTION BOXES BY CONTRACTOR. AFTER CONDUITS ARE INSTALLED, REMAINING BLOCKOUT SPACE TO BE FILLED AND SEALED WITH NON-SHRINK GROUT (TYP. FOR ALL BLOCKOUTS).
5. 4" DIA. PERFORATED DRAIN PIPE. SEE DETAIL B910.

NO.	DATE	BY	CHECK	DESIGN	REVISION / SUBMITTAL

DESIGNED BY: CJS | CHECKED BY: DLS
DRAWN BY: KAG | CHECKED BY: DLS

AECOM Kimley»Horn

90% SUBMISSION - 01/22/16

METROPOLITAN COUNCIL

SOUTHWEST Green Line LRT Extension

CIVIL - VOLUME 4D
MINNEHAHA CREEK LRT BRIDGE
BRIDGE R0689
EAST ABUTMENT DETAILS 4

DISCIPLINE: STRUCTURES
SHEET NAME: CBRR0689-BRG-ABT-013

SHEET 17 OF 45

Dec, 14 2015 03:19 pm v:\3400_ADC\CAD\SEGMENT E2\PLAN SHEETS\STRUCTURES\MNHA-LRT\CBRR0689-BRG-ABT-013.dwg By: Zack.Gasse

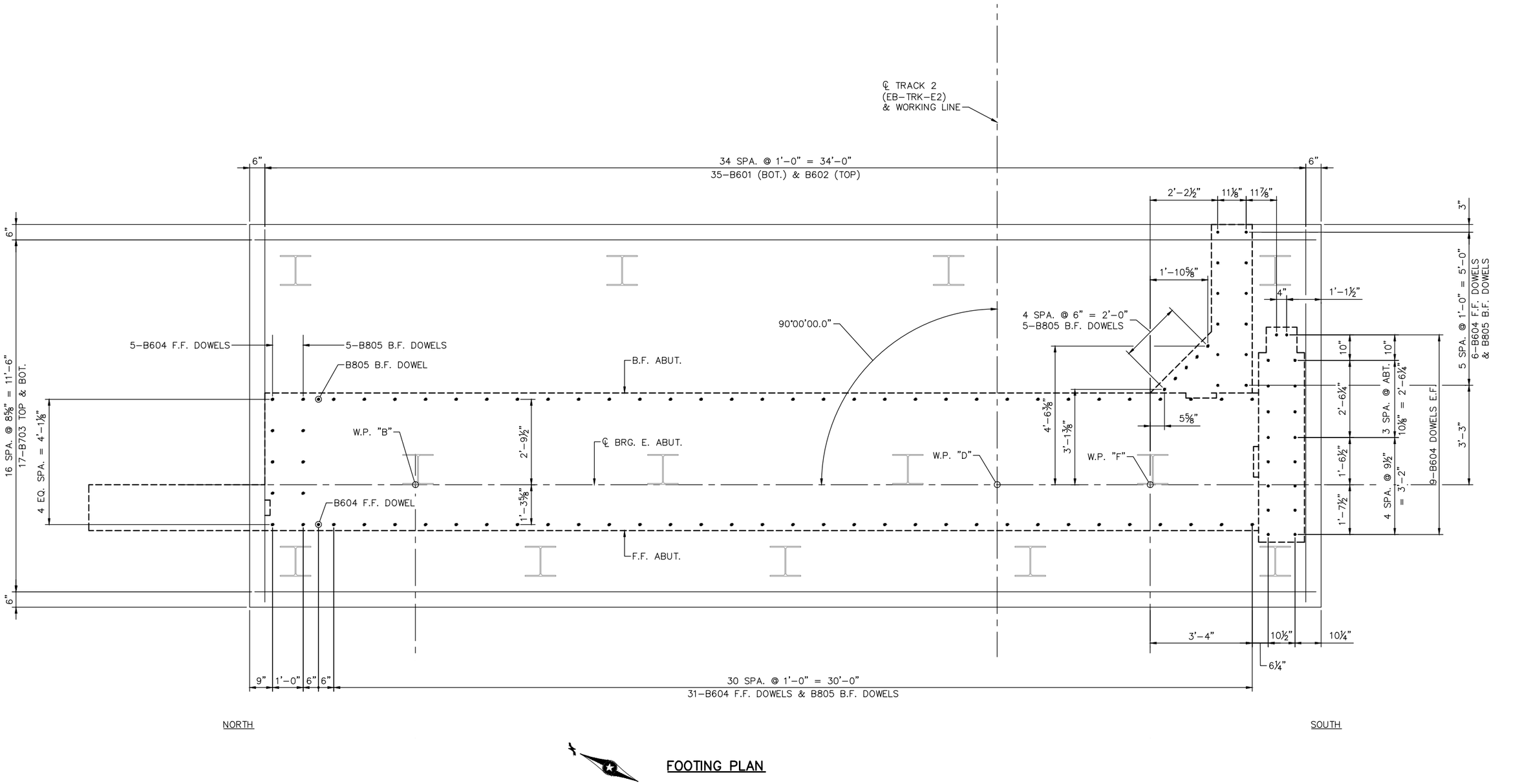

FOOTING PLAN

NO.	DATE	BY	CHECK	DESIGN	REVISION / SUBMITTAL

DESIGNED BY: CJS CHECKED BY: DLS
DRAWN BY: KAG CHECKED BY: DLS

AECOM Kimley»Horn

90% SUBMISSION - 01/22/16

METROPOLITAN COUNCIL

SOUTHWEST Green Line LRT Extension

CIVIL - VOLUME 4D
MINNEHAHA CREEK LRT BRIDGE
BRIDGE R0689
EAST ABUTMENT REINFORCEMENT 1

DISCIPLINE: STRUCTURES
SHEET NAME: CBRR0689-BRG-ABT-014

SHEET 18 OF 45

Dec, 14 2015 01:11 pm V:\3400_ADC\CAD\SEGMENT E2\PLAN SHEETS\STRUCTURES\MNHA-LRT\CBRR0689-BRG-ABT-014.dwg By: Joe.Menapace

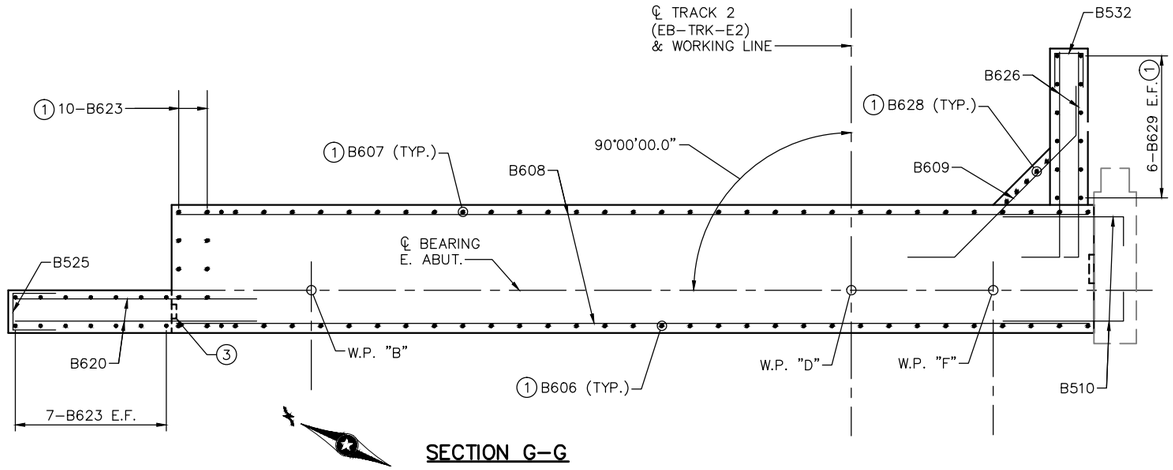

SECTION G–G

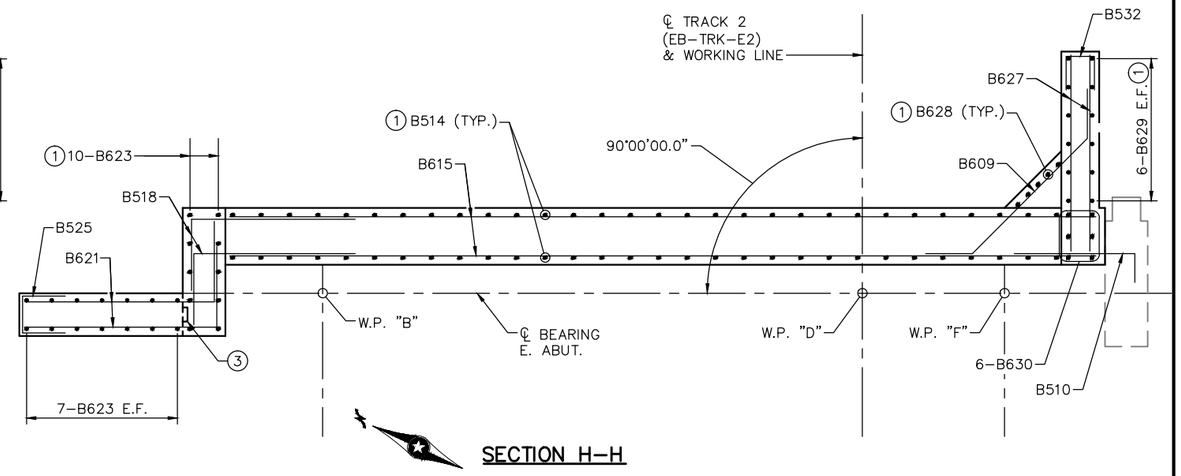

SECTION H–H

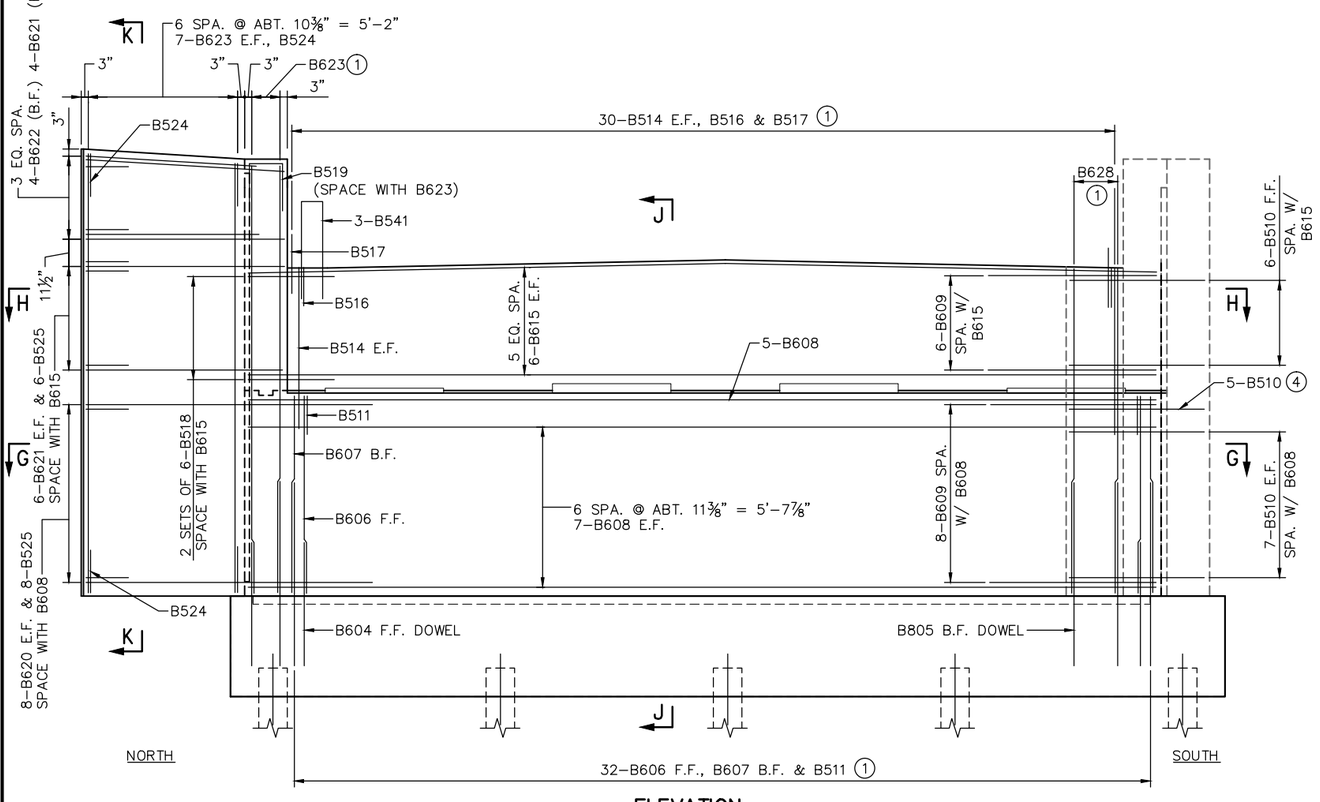

ELEVATION

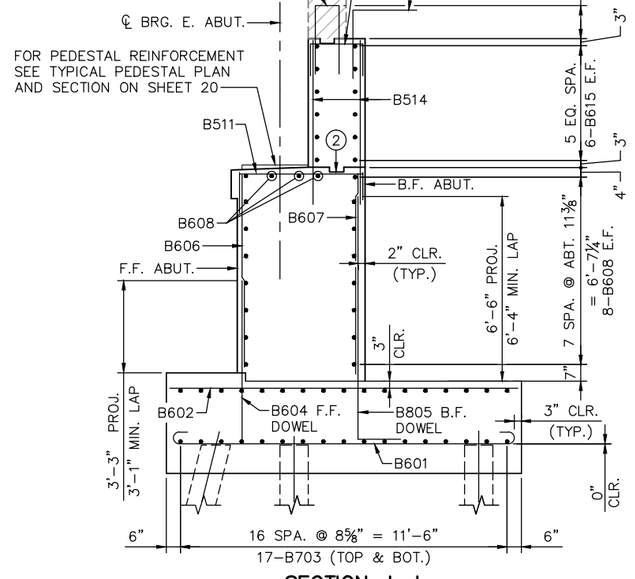

SECTION J–J

NOTES:

SEE SHEET 20 FOR SECTION K–K.

PILASTER REINFORCEMENT EXCLUDED FROM THIS SHEET FOR CLARITY. SEE SHEET 21.

1 SPACE WITH DOWEL BARS.

2 PERMISSIBLE CONST. JOINT WITH 2" X 6" KEYWAY.

3 CONST. JOINT WITH 2" X 6" KEYWAY.

4 SPACE WITH B608 BARS.

NO.	DATE	BY	CHECK	DESIGN	REVISION / SUBMITTAL

DESIGNED BY: CJS | CHECKED BY: DLS
DRAWN BY: KAG | CHECKED BY: DLS

AECOM Kimley»Horn

90% SUBMISSION - 01/22/16

METROPOLITAN COUNCIL

SOUTHWEST Green Line LRT Extension

CIVIL - VOLUME 4D
MINNEHAHA CREEK LRT BRIDGE
BRIDGE R0689
EAST ABUTMENT REINFORCEMENT 2

DISCIPLINE: STRUCTURES
SHEET NAME: CBRR0689-BRG-ABT-015

SHEET 19 OF 45

Dec. 14 2015 01:11 pm V:\3400_ADC\CAD\SEGMENT E2\PLAN SHEETS\STRUCTURES\MNHA-LRT\CBRR0689-BRG-ABT-015.dwg By: Joe.Menapace

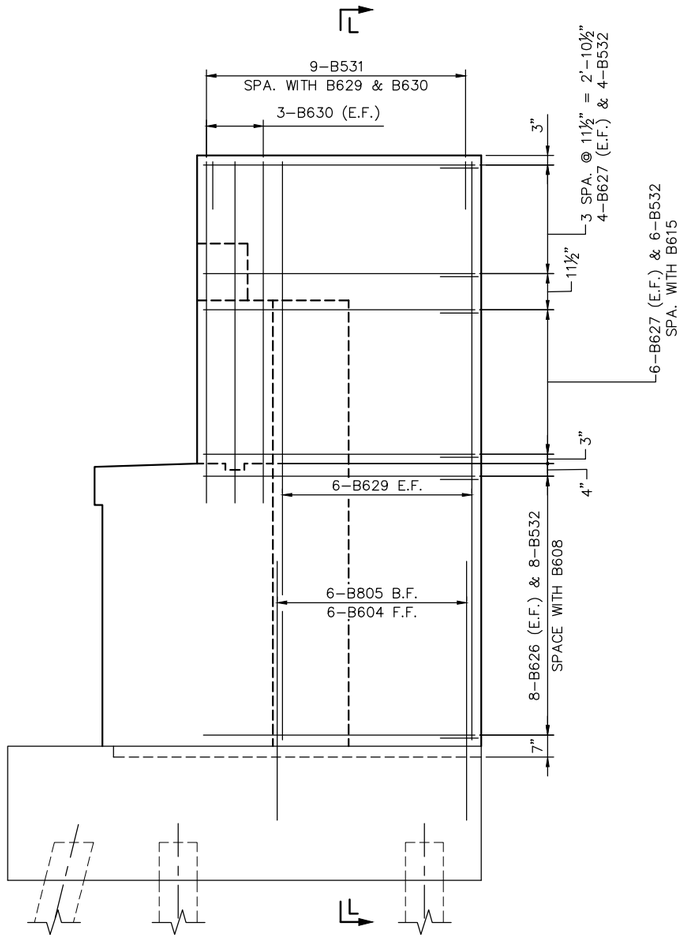

SOUTHEAST WINGWALL ELEVATION
(PILASTER NOT SHOWN FOR CLARITY)

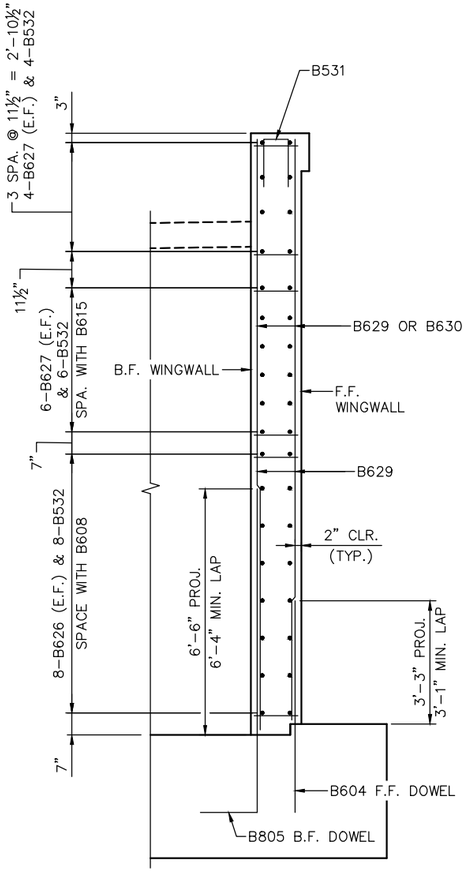

SECTION L–L

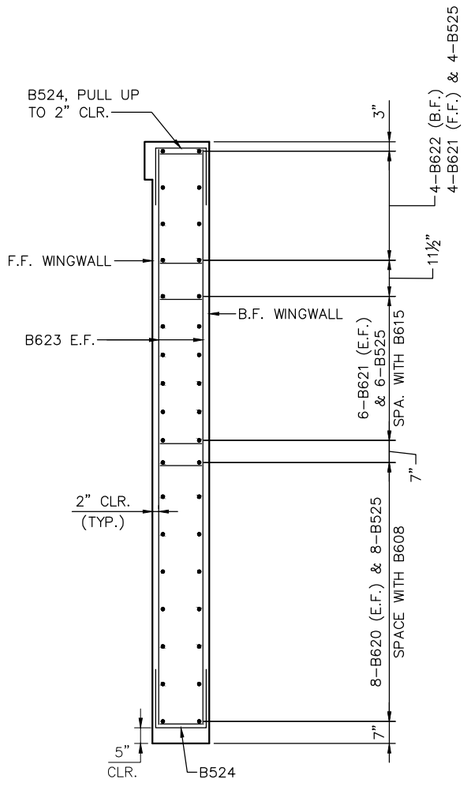

SECTION K–K

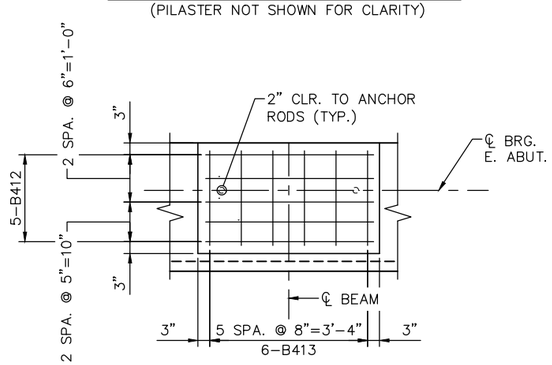

TYPICAL PEDESTAL PLAN

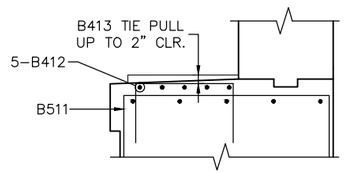

TYPICAL PEDESTAL SECTION

NO.	DATE	BY	CHECK	DESIGN	REVISION / SUBMITTAL

DESIGNED BY: CJS | CHECKED BY: DLS
DRAWN BY: KAG | CHECKED BY: DLS

AECOM Kimley»Horn

90% SUBMISSION - 01/22/16

METROPOLITAN COUNCIL

SOUTHWEST Green Line LRT Extension

CIVIL - VOLUME 4D
MINNEHAHA CREEK LRT BRIDGE
BRIDGE R0689
EAST ABUTMENT REINFORCEMENT 3

DISCIPLINE: STRUCTURES
SHEET NAME: CBRR0689-BRG-ABT-016

SHEET 20 OF 45

Dec. 14 2015 01:12 pm V:\3400_ADC\CAD\SEGMENT E2\PLAN SHEETS\STRUCTURES\MNHA-LRT\CBRR0689-BRG-ABT-016.dwg By: Joe.Menapace

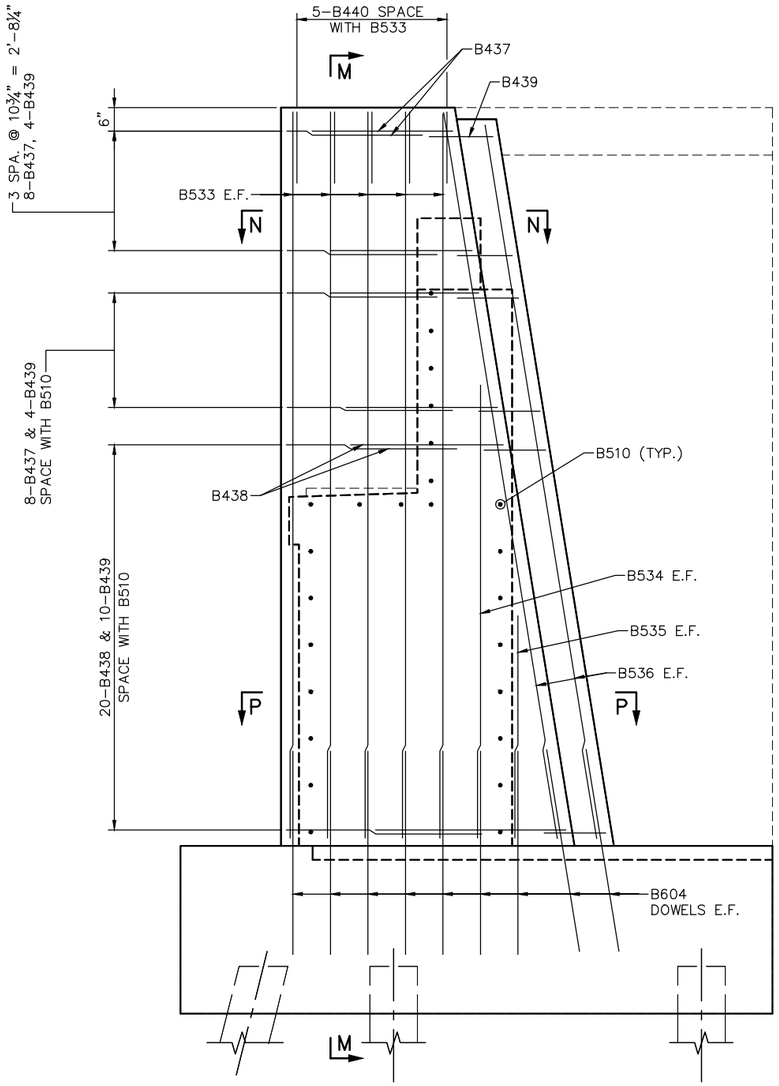

SOUTHEAST PILASTER ELEVATION

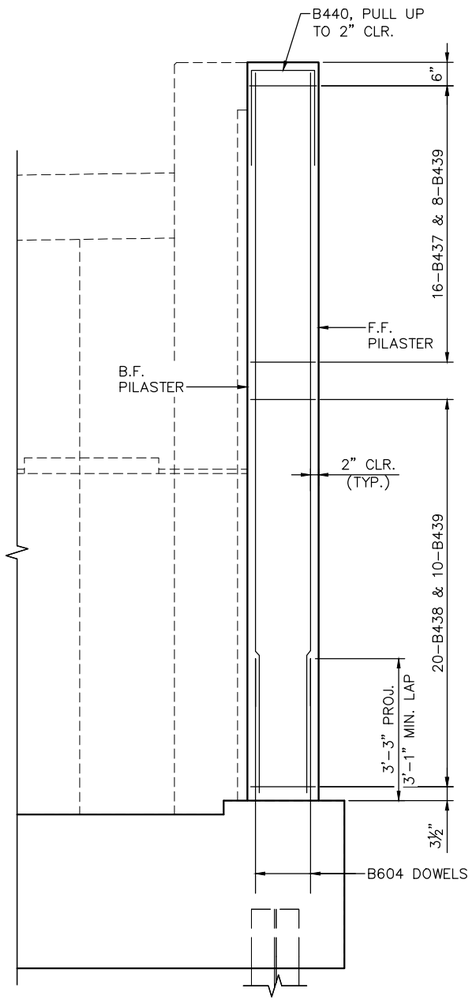

SECTION M–M

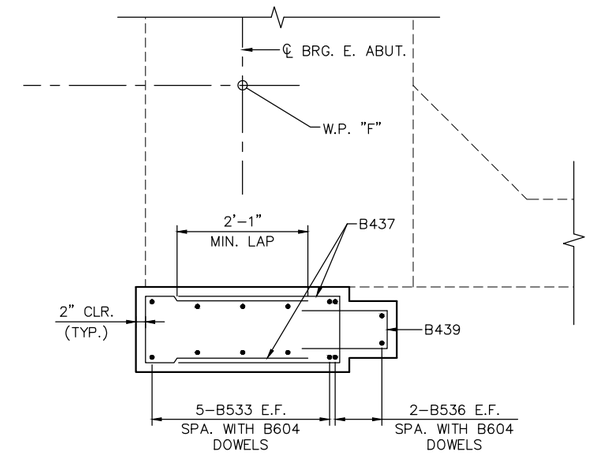

SECTION N–N

SECTION P–P

NO.	DATE	BY	CHECK	DESIGN	REVISION / SUBMITTAL

DESIGNED BY: CJS CHECKED BY: DLS
DRAWN BY: KAG CHECKED BY: DLS

AECOM Kimley»Horn

90% SUBMISSION - 01/22/16

METROPOLITAN COUNCIL

SOUTHWEST Green Line LRT Extension

CIVIL - VOLUME 4D
MINNEHAHA CREEK LRT BRIDGE
BRIDGE R0689
EAST ABUTMENT REINFORCEMENT 4

DISCIPLINE: STRUCTURES
SHEET NAME: CBRR0689-BRG-ABT-017

SHEET 21 OF 45

Dec, 14 2015 01:12 pm V:\3400_ADC\CAD\SEGMENT E2\PLAN SHEETS\STRUCTURES\MNHA-LRT\CBRR0689-BRG-ABT-017.dwg By: Joe.Menapace

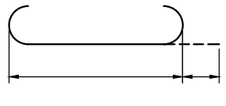

B601

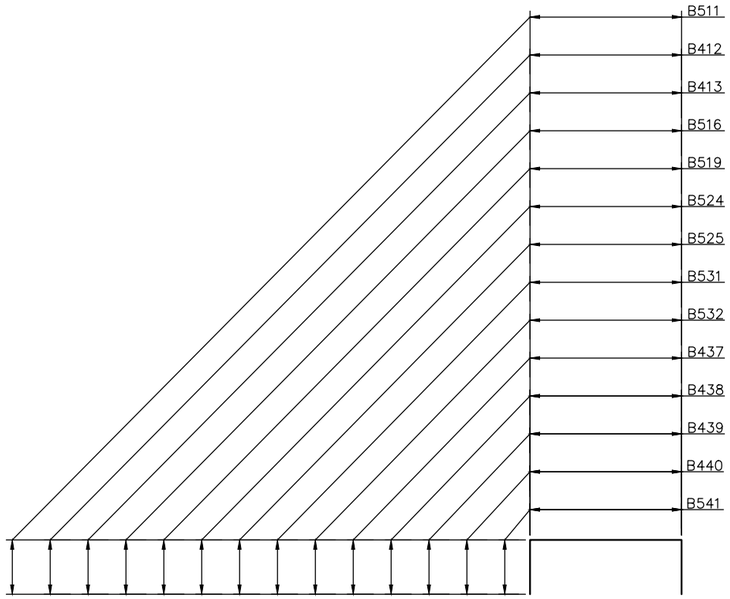

B511, B412, B413, B516, B519, B524, B525, B531, B532, B437, B438, B439, B440, & B541

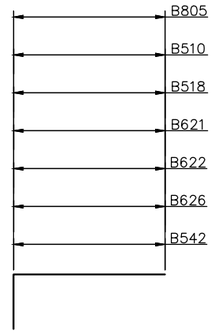

B805, B510, B518, B621, B622, B626, & B542

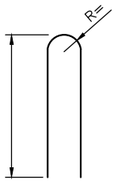

B517

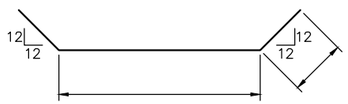

B609

BILL OF REINFORCEMENT FOR EAST ABUTMENT

BAR	NO.	LENGTH	SHAPE	LOCATION
B601	0	'-"	BENT	FOOTING, BOT., TRANS.
B602	0	'-"	STR.	FOOTING, TOP, TRANS.
B703	0	'-"	STR.	FOOTING, LONG.
B604	0	'-"	STR.	F.F. DOWELS
B805	0	'-"	BENT	B.F. DOWELS
B606	0	'-"	STR.	F.F. STEM VERT.
B607	0	'-"	STR.	B.F. STEM VERT.
B608	0	'-"	STR.	STEM LONG.
B609	0	'-"	BENT	B.F. FILLET LONG.
B510	0	'-"	BENT	PILASTER DOWEL LONG.
B511	0	'-"	BENT	STEM TIE
B412	0	'-"	BENT	PEDESTAL TIE
B413	0	'-"	BENT	PEDESTAL TIE
B514	0	'-"	STR.	BACKWALL VERT.
B615	0	'-"	STR.	BACKWALL LONG.
B516	0	'-"	BENT	BACKWALL TIE
B517	0	'-"	BENT	PAVING BLOCK TIE
B518	0	'-"	BENT	MASKWALL LONG. BACKWALL DOWEL
B519	0	'-"	BENT	MASKWALL TOP TIE
B620	0	'-"	STR.	N WINGWALL LONG.
B621	0	'-"	BENT	N WINGWALL LONG.
B622	0	'-"	BENT	N WINGWALL LONG.
B623	0	'-"	STR.	N WINGWALL VERT.
B524	0	'-"	BENT	N WINGWALL TIE
B525	0	'-"	BENT	N WINGWALL END TIE
B626	0	'-"	BENT	S WINGWALL LONG.
B627	0	'-"	STR.	S WINGWALL LONG.
B628	0	'-"	STR.	B.F. FILLET VERT.
B629	0	'-"	STR.	S WINGWALL VERT.
B630	0	'-"	STR.	S WINGWALL VERT.
B531	0	'-"	BENT	S WINGWALL TIE
B532	0	'-"	BENT	S WINGWALL END TIE
B533	0	'-"	STR.	PILASTER VERT.
B534	0	'-"	STR.	PILASTER VERT.
B535	0	'-"	STR.	PILASTER VERT.
B536	0	'-"	STR.	PILASTER DIAG.
B437	0	'-"	BENT	PILASTER TIE
B438	0	'-"	BENT	PILASTER TIE
B439	0	'-"	BENT	PILASTER TIE
B440	0	'-"	BENT	PILASTER TOP TIE
B541	0	'-"	BENT	PARAPET TIE
B542	0	'-"	BENT	TRANSITION SLAB TIE

NO.	DATE	BY	CHECK	DESIGN	REVISION / SUBMITTAL

DESIGNED BY: CJS | CHECKED BY: DLS
DRAWN BY: KAG | CHECKED BY: DLS

AECOM Kimley»Horn

90% SUBMISSION - 01/22/16

METROPOLITAN COUNCIL

SOUTHWEST Green Line LRT Extension

CIVIL - VOLUME 4D
MINNEHAHA CREEK LRT BRIDGE
BRIDGE R0689
EAST ABUTMENT REINFORCEMENT 5

DISCIPLINE: STRUCTURES
SHEET NAME: CBRR0689-BRG-ABT-018

SHEET 22 OF 45

Dec, 14 2015 01:13 pm V:\3400_ADC\CAD\SEGMENT E2\PLAN SHEETS\STRUCTURES\MNHA-LRT\CBRR0689-BRG-ABT-018.dwg By: Joe.Menapace

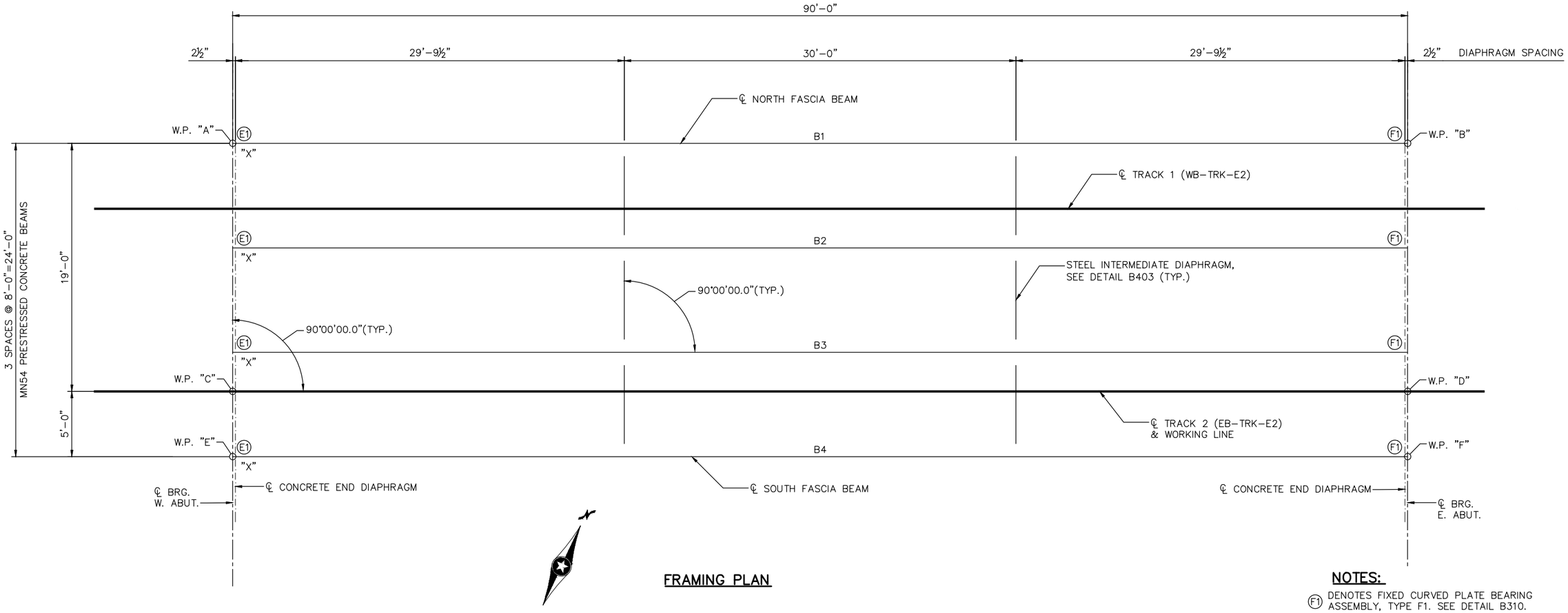

FRAMING PLAN

NOTES:

(F1) DENOTES FIXED CURVED PLATE BEARING ASSEMBLY, TYPE F1. SEE DETAIL B310.

(E1) DENOTES EXPANSION CURVED PLATE BEARING ASSEMBLY, TYPE E1. SEE DETAIL B311.

"X" DENOTES END OF BEAM.

ALL BEAMS SET PARALLEL TO WORKING LINE, ALL DIAPHRAGMS SET PARALLEL TO SUBSTRUCTURES

NO.	DATE	BY	CHECK	DESIGN	REVISION / SUBMITTAL

DESIGNED BY: DJW | CHECKED BY: SAD
DRAWN BY: MRD | CHECKED BY: DLS

AECOM Kimley»Horn

90% SUBMISSION - 01/22/16

METROPOLITAN COUNCIL

SOUTHWEST Green Line LRT Extension

CIVIL - VOLUME 4D
MINNEHAHA CREEK LRT BRIDGE
BRIDGE R0689
FRAMING PLAN

DISCIPLINE: STRUCTURES
SHEET NAME: CBRR0689-BRG-SUP-002

SHEET 23 OF 45

Dec, 14 2015 01:13 pm v: \3400_ADC\CAD\SEGMENT E2\PLAN SHEETS\STRUCTURES\MNHA-LRT\CBRR0689-BRG-SUP-002.dwg By: Joe.Menapace

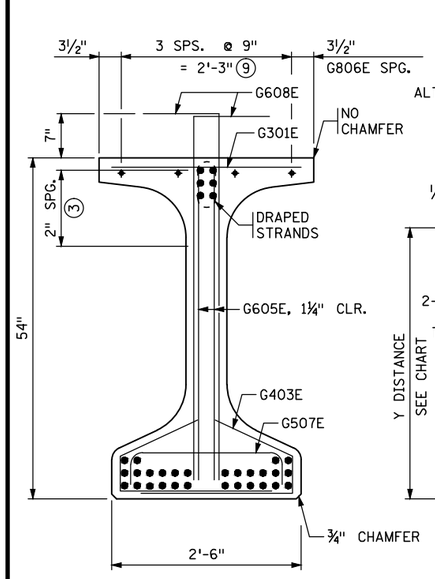

END VIEW

CUT STRANDS FLUSH WITH CONCRETE.
COVER ENDS WITH ONE COMPONENT POLYURETHANE SEALANT PER APPROVED PRODUCT LIST.
(G609E BAR NOT SHOWN)

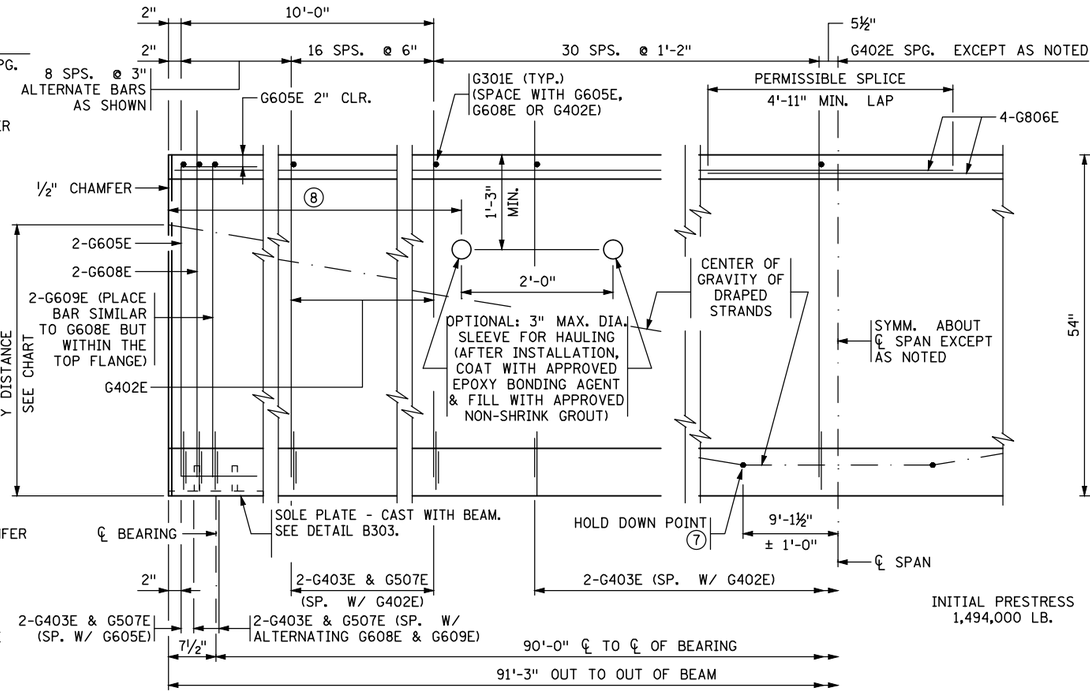

BEAM ELEVATION

INITIAL PRESTRESS
1,494,000 LB.

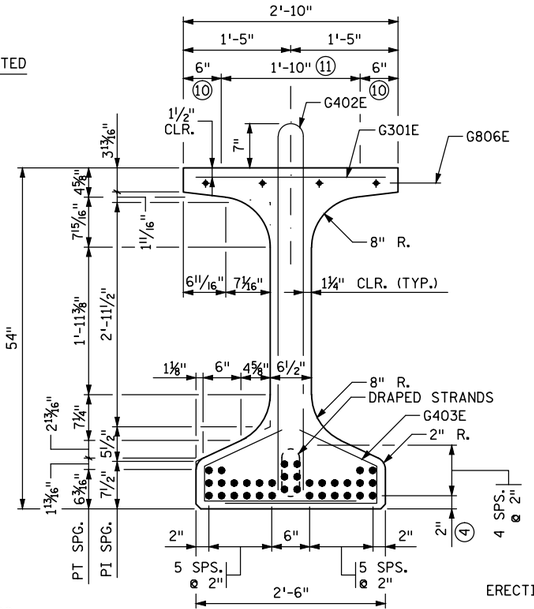

SECTION AT ℄ SPAN

Y DISTANCES (INCHES)	NO.	℄ SPAN	END
STRAIGHT STRANDS	28	3.43"	☒
DRAPED STRANDS	6	5"	49" □
TOTAL STRANDS	34	3.71"	☒

Y = DISTANCE TO CENTER OF GRAVITY OF STRANDS FROM BOTTOM OF BEAM. ALL STRANDS SPACED 2" CENTER TO CENTER, HORIZONTALLY AND VERTICALLY, EXCEPT AS NOTED.

□ A TOLERANCE OF ± 1" WILL BE PERMITTED IN THIS DIMENSION.

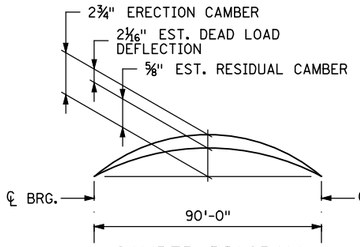

CAMBER DIAGRAM

ERECTION CAMBER SHOWN IS AFTER DIAPHRAGMS ARE IN PLACE.

DEAD LOAD DEFLECTION SHOWN IS FOR WEIGHT OF SLAB, WEARING COURSE, BALLAST AND TRACK, BARRIER, SIDEWALK AND MEDIAN WHERE APPLICABLE.

CONTRACTOR WILL TAKE ELEVATIONS AT TOP OF BEAMS AFTER ERECTION AND WILL ALLOW FOR DEFLECTION SHOWN TO ENABLE BUILDING FORMS TO CORRECT GRADE AND SPECIFIED SLAB THICKNESS. PROVIDE COPY OF ELEVATIONS TO THE ENGINEER.



DETAIL "A"

CALCULATED PRESTRESS LOSSES	
ELASTIC SHORTENING LOSS	19.08 KSI
LONG TERM LOSSES	24.53 KSI
TOTAL LOSSES	43.61 KSI

MINIMUM CONCRETE STRENGTH - K.S.I.	
(1) f'c1	(2) f'c
6 KSI	7 KSI

PRESTRESSING STRAND DIAMETER	
(5)	½" □
(5)	0.60" ☒

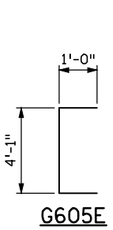

GENERAL NOTES

PROVIDE HANDLING HOOKS OR DEVICES AS REQUIRED BY CONTRACTOR.

MARK EACH BEAM SHOWING BRIDGE NUMBER, CASTING DATE, AND INDIVIDUAL IDENTIFICATION LETTERS AND NUMBERS ON THE FACE OF THE BEAM, NEAR THE END, SO LOCATED THAT THEY WILL BE EXPOSED AFTER THE END DIAPHRAGMS HAVE BEEN CAST. MARK FASCIA BEAMS ON THE INSIDE FACE. ENSURE ALL MARKINGS ARE STENCILLED AND CLEARLY LEGIBLE. FOR LOCATION OF BEAMS, SEE FRAMING PLAN.

~~ALL MATERIAL AND WORK SHOWN OR NOTED ON THIS SHEET IS INCLUDED IN UNIT PRICE BID FOR PRESTRESSED CONCRETE BEAMS. SEE SPEC. 2405.~~

SEE FRAMING PLAN FOR BEAM END MARKED "X" AND DIAPHRAGM SPACING.

APPROXIMATE WEIGHT OF BEAM IS 36.8 TONS.

AS AN ALTERNATE TO THE END DIAPHRAGM ANCHORAGES SHOWN, THE CONTRACTOR MAY SUBMIT DETAILS OF A CAST-IN-PLACE ANCHORAGE TO THE ENGINEER FOR APPROVAL. ANCHORAGE MUST PROVIDE AN ULTIMATE PULL OUT STRENGTH OF 15 KIPS PER ANCHORAGE.

APPLY AN APPROVED SEALER TO THE SIDES OF THE BEAM NEAR EACH END PER THE SPECIAL PROVISIONS.

(1) MINIMUM CONCRETE STRENGTH AT TIME OF PRESTRESS TRANSFER.

(2) MINIMUM CONCRETE STRENGTH WHEN BEAM CAN BE TRANSPORTED AND INSTALLED.

(3) DRAPED STRANDS.

(4) STRAIGHT STRANDS.

(5) USE 7-WIRE LOW RELAXATION PRESTRESSING STRAND, CONFORMING TO ASTM A416, GRADE 270.

(6) ~~FOR INTEGRAL ABUTMENT, SOLE PLATE CAN BE ELIMINATED OR REPLACED WITH AN APPROVED PROTECTION PLATE. BEAMS DETAILED TO INCLUDE A TAPERED PLATE PER STANDARD FIGURE B309 MUST INCLUDE SOLE PLATE.~~

(7) CENTER OF GRAVITY OF HOLD DOWNS WHEN MULTIPLE HOLD DOWNS ARE USED.

(8) DIMENSION DETERMINED BY CONTRACTOR. MAINTAIN 2" MINIMUM CLEAR FROM STRANDS.

(9) TWO INSIDE BARS MAY BE PLACED ADJACENT TO VERTICAL STIRRUP FOR TYING CONVENIENCE.

(10) STEEL TROWEL TO SMOOTH FINISH AND APPLY BOND BREAKER PER APPROVED PRODUCTS LIST.

(11) ROUGH FLOAT AND BROOM TRANSVERSELY FOR BOND PER SPEC. 2405.3.D.

CONCRETE END DIAPHRAGM

PARAPET ABUTMENT
(SEE DETAIL B814 FOR DIAPHRAGM DETAILS)

CONCRETE END DIAPHRAGM

SEE SUPERSTRUCTURE DETAILS AND REINFORCEMENT FOR DIAPHRAGM DETAILS

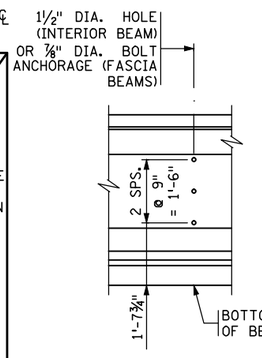

STEEL INTERMEDIATE DIAPHRAGM

(SEE DETAIL B403 FOR DIAPHRAGM DETAILS)

REVISED:

APPROVED: JANUARY 13, 2015
Nancy Daubenberger
STATE BRIDGE ENGINEER

CERTIFIED BY _____ 01/22/16
LICENSED PROFESSIONAL ENGINEER — DATE
NAME: ENGINEER LIC. NO. #####

TITLE: MN54" PRESTRESSED CONCRETE BEAM (PRETENSIONED) MN54-92

DES: DJW DR: JFM
CHK: SAD CHK: DLS

APPROVED:

BEAMS B1-B4

FIG. 5-397.508

BRIDGE NO. R0689

SHEET NO. 24 OF 45 SHEETS

Dec. 14 2015 03:05 pm V:\3400_ADC\CAD\SEGMENT E2\PLAN SHEETS\STRUCTURES\MNHA-LRT\CBRR0689-BRG-PCB-001.dwg By: Zack.Gasse

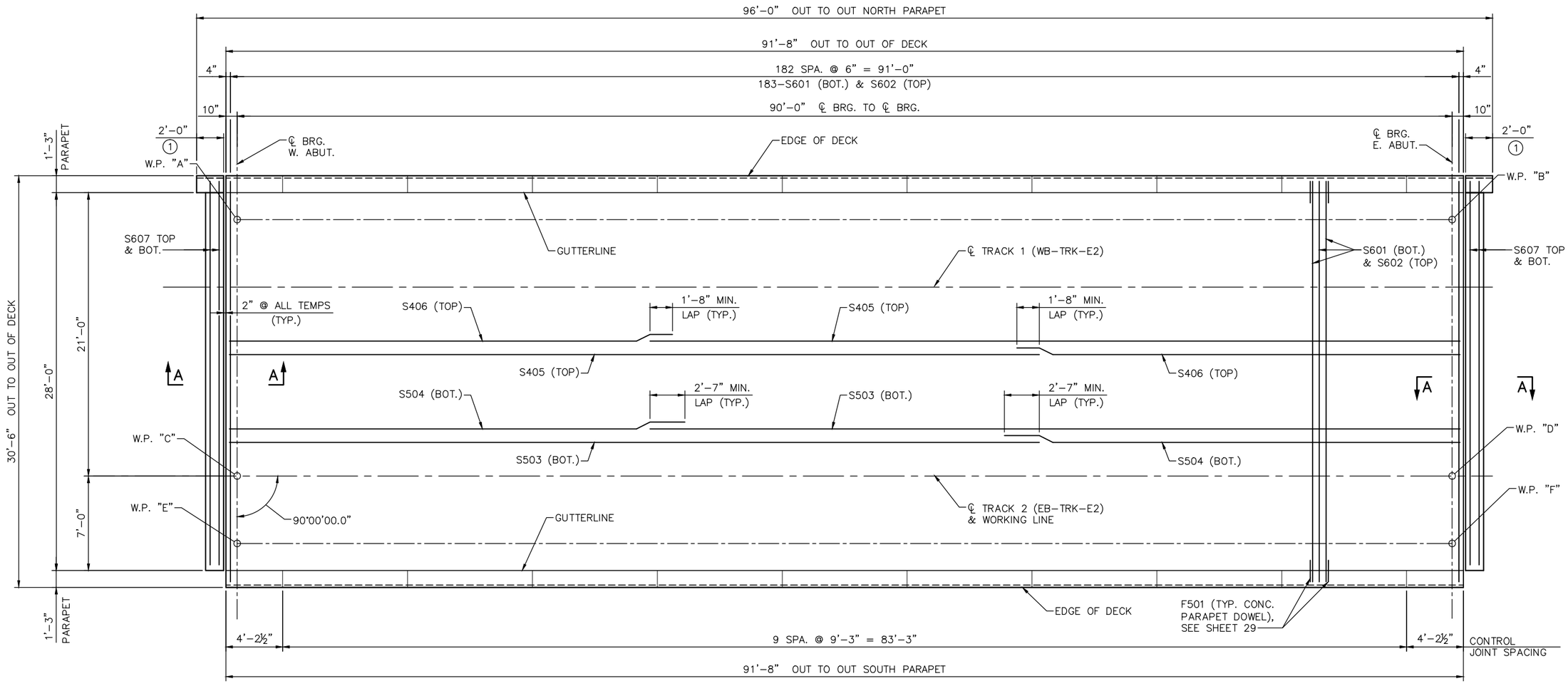

DECK PLAN

NOTES:

SEE SHEET 26 FOR TRANSVERSE SECTION THRU DECK & SECTION A-A.

(1) CONCRETE PARAPET (TYPE P-1) IS LOCATED ON PAVING BLOCK.

NO.	DATE	BY	CHECK	DESIGN	REVISION / SUBMITTAL

DESIGNED BY: DJW | CHECKED BY: SAD
DRAWN BY: MRD | CHECKED BY: DLS

AECOM Kimley»Horn

90% SUBMISSION - 01/22/16

METROPOLITAN COUNCIL

SOUTHWEST Green Line LRT Extension

CIVIL - VOLUME 4D
MINNEHAHA CREEK LRT BRIDGE
BRIDGE R0689
SUPERSTRUCTURE DETAILS 1

DISCIPLINE: STRUCTURES

SHEET NAME: CBRR0689-BRG-SUP-003

SHEET 25 OF 45

Dec, 14 2015 01:14 pm V:\3400_ADC\CAD\SEGMENT E2\PLAN SHEETS\STRUCTURES\MNHA-LRT\CBRR0689-BRG-SUP-003.dwg By: Joe.Menapace

BILL OF REINFORCEMENT FOR SUPERSTRUCTURE

BAR	NO.	LENGTH	SHAPE	LOCATION
S601	0	'-"	STR.	LONGITUDINAL, BOT.
S602	0	'-"	STR.	LONGITUDINAL, TOP
S503	0	'-"	STR.	LONGITUDINAL, BOT.
S504	0	'-"	STR.	LONGITUDINAL, BOT.
S405	0	'-"	STR.	LONGITUDINAL, TOP
S406	0	'-"	STR.	LONGITUDINAL, TOP
S607	0	'-"	STR.	PAVING BLOCK, TOP & BOT.

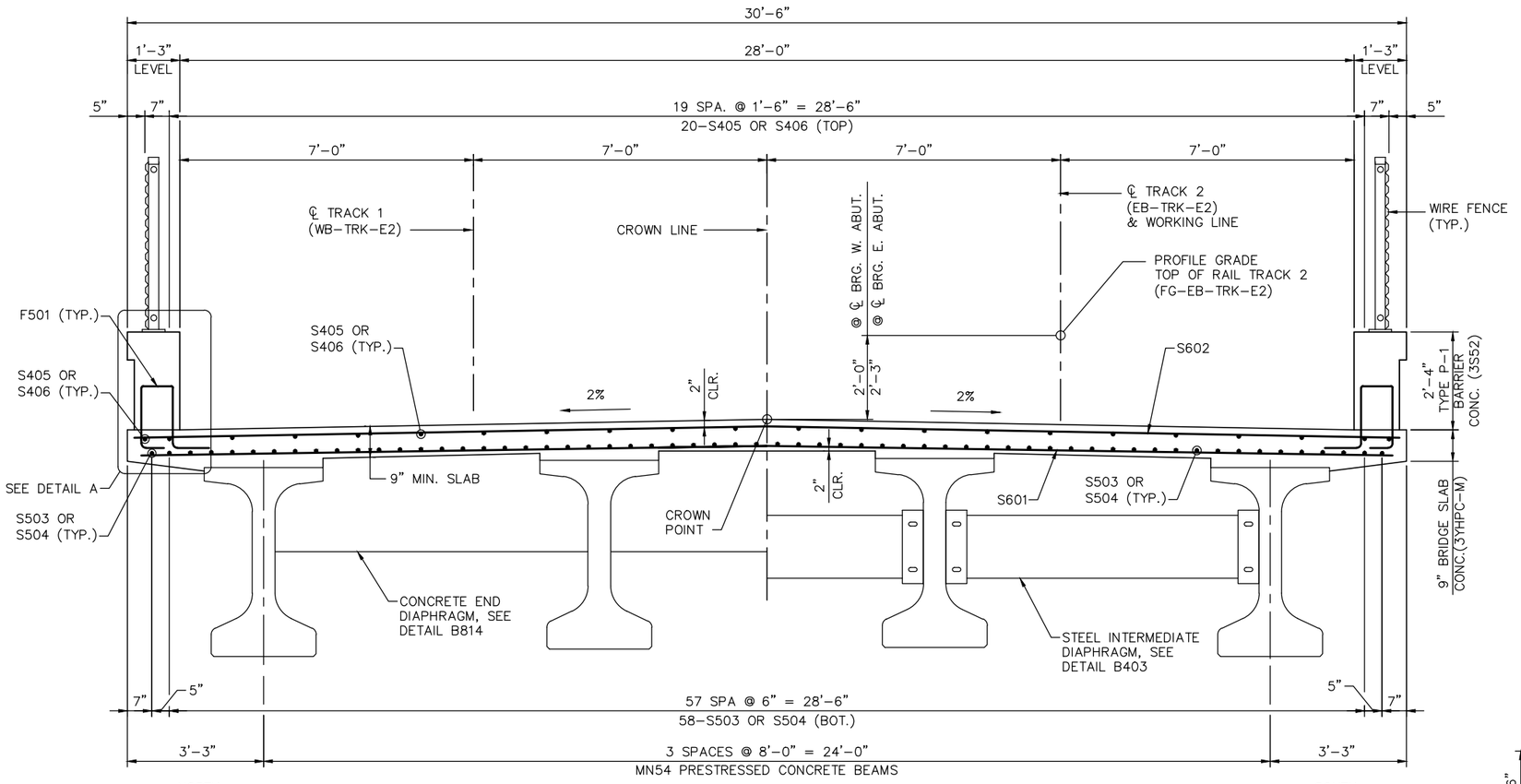

TRANSVERSE SECTION

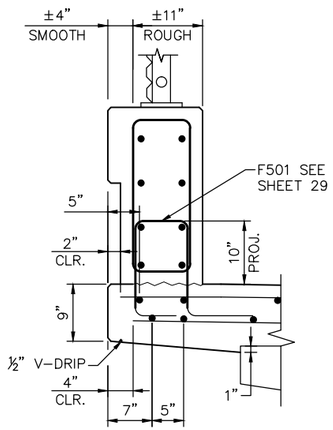

DETAIL A

SECTION A-A

NO.	DATE	BY	CHECK	DESIGN	REVISION / SUBMITTAL

DESIGNED BY: DJW | CHECKED BY: SAD
DRAWN BY: MRD | CHECKED BY: DLS

AECOM Kimley»Horn

90% SUBMISSION - 01/22/16

METROPOLITAN COUNCIL

SOUTHWEST Green Line LRT Extension

CIVIL - VOLUME 4D
MINNEHAHA CREEK LRT BRIDGE
BRIDGE R0689
SUPERSTRUCTURE DETAILS 2

DISCIPLINE: STRUCTURES
SHEET NAME: CBRR0689-BRG-SUP-004

SHEET 26 OF 45

Dec, 14 2015 01:15 pm V:\3400_ADC\CAD\SEGMENT E2\PLAN SHEETS\STRUCTURES\MNHA-LRT\CBRR0689-BRG-SUP-004.dwg By: Joe.Menapace

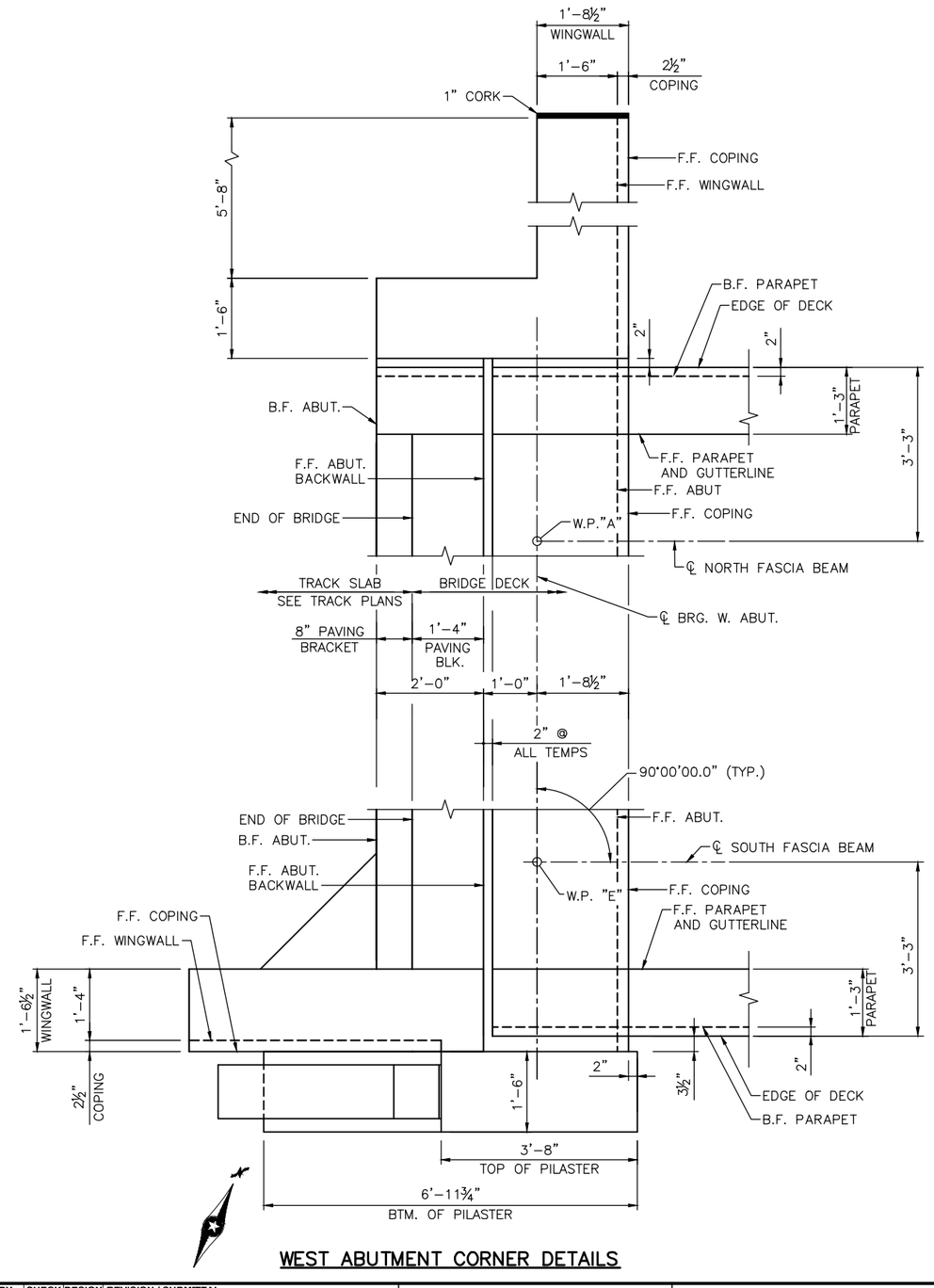

WEST ABUTMENT CORNER DETAILS

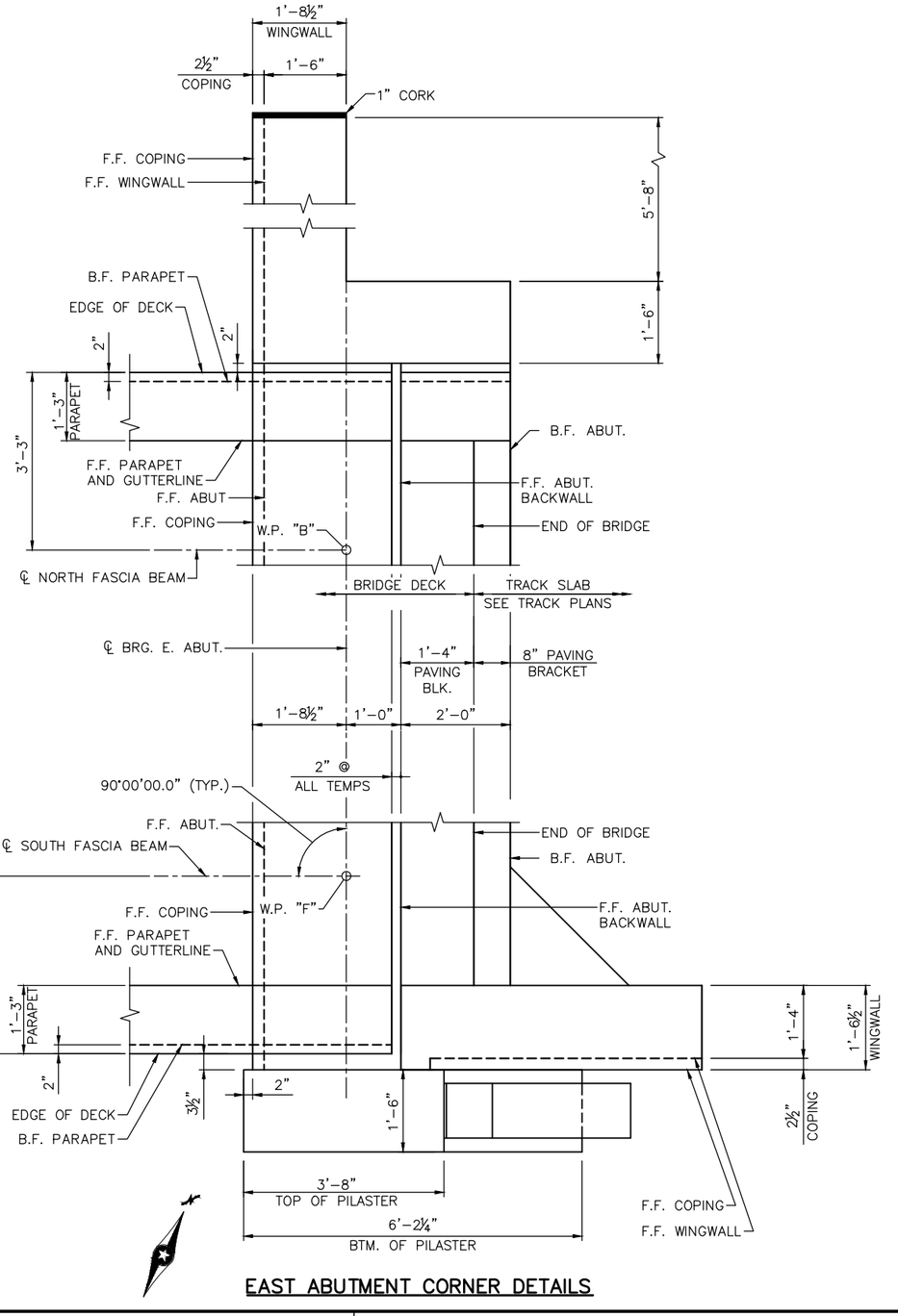

EAST ABUTMENT CORNER DETAILS

NO.	DATE	BY	CHECK	DESIGN	REVISION / SUBMITTAL

DESIGNED BY: CJS | CHECKED BY: DLS
DRAWN BY: JFM | CHECKED BY: DLS

AECOM Kimley»Horn

90% SUBMISSION - 01/22/16

METROPOLITAN COUNCIL

SOUTHWEST Green Line LRT Extension

CIVIL - VOLUME 4D
MINNEHAHA CREEK LRT BRIDGE
BRIDGE R0689
SUPERSTRUCTURE DETAILS 3

DISCIPLINE: STRUCTURES

SHEET NAME: CBRR0689-BRG-SUP-005

SHEET 27 OF 45

Dec, 14 2015 01:16 pm V:\3400_ADC\CAD\SEGMENT E2\PLAN SHEETS\STRUCTURES\MNHA-LRT\CBRR0689-BRG-SUP-005.dwg By: Joe.Menapace

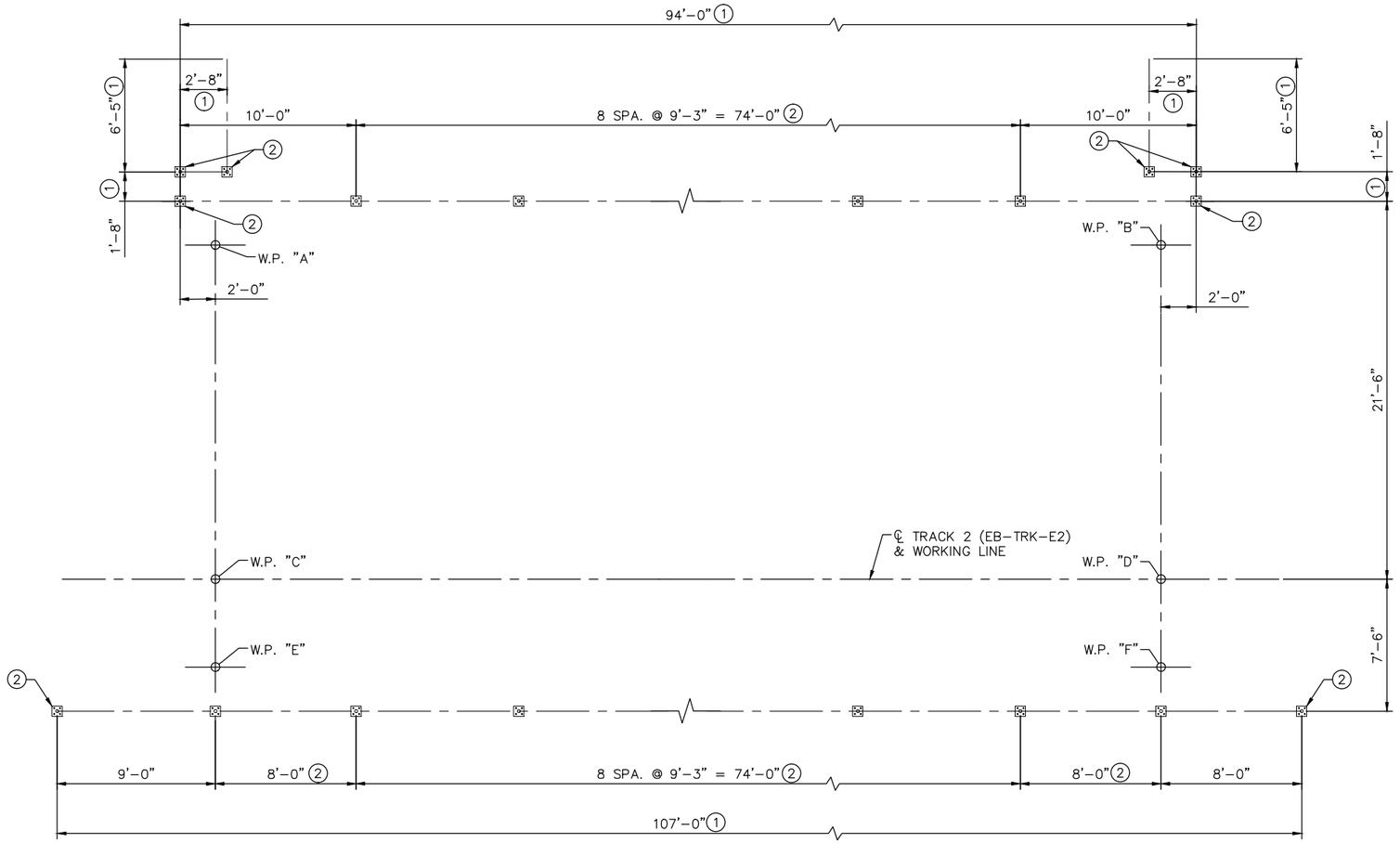

PLAN VIEW – FENCE POST LAYOUT

NOTES:

FENCE SHALL RETAIN A 4" SPHERE UP TO 27" ABOVE GRADE, AND RETAIN A 6" SPHERE FROM 27" ABOVE GRADE TO TOP OF FENCE.

POST SHALL BE SET VERTICAL.

(1) 48" TALL WIRE FENCE FABRIC.

(2) FENCE POST ANCHORAGES SHALL BE TYPE A. SEE DETAIL B905.

NO.	DATE	BY	CHECK	DESIGN	REVISION / SUBMITTAL

DESIGNED BY: CJS | CHECKED BY: DLS
DRAWN BY: JFM | CHECKED BY: DLS

AECOM Kimley»Horn

90% SUBMISSION - 01/22/16

METROPOLITAN COUNCIL

SOUTHWEST Green Line LRT Extension

CIVIL - VOLUME 4D
MINNEHAHA CREEK LRT BRIDGE
BRIDGE R0689
SUPERSTRUCTURE DETAILS 4

DISCIPLINE: STRUCTURES
SHEET NAME: CBRR0689-BRG-SUP-006

SHEET 28 OF 45

Dec, 14 2015 01:16 pm v:\3400_ADC\CAD\SEGMENT E2\PLAN SHEETS\STRUCTURES\MNHA-LRT\CBRR0689-BRG-SUP-006.dwg By: Joe.Menapace

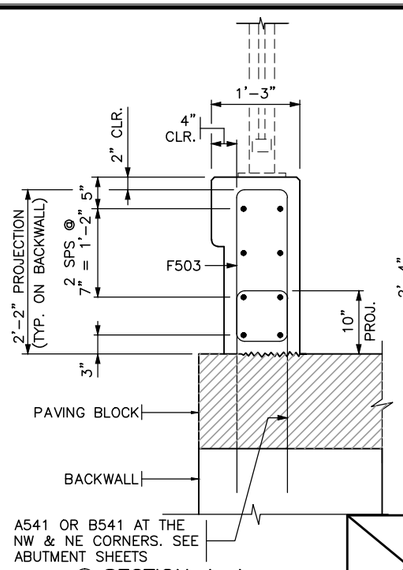

Ⓐ SECTION A–A

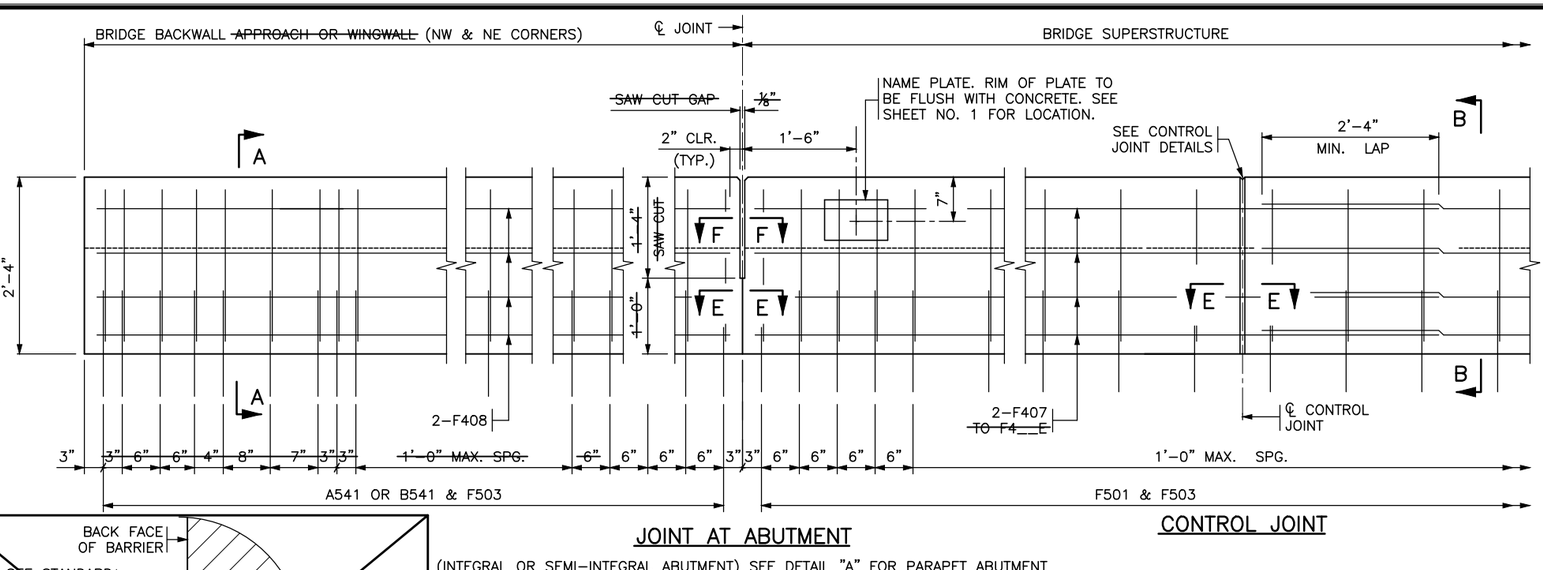

JOINT AT ABUTMENT

CONTROL JOINT

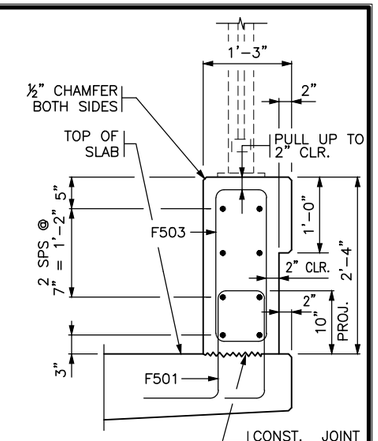

Ⓐ SECTION B–B

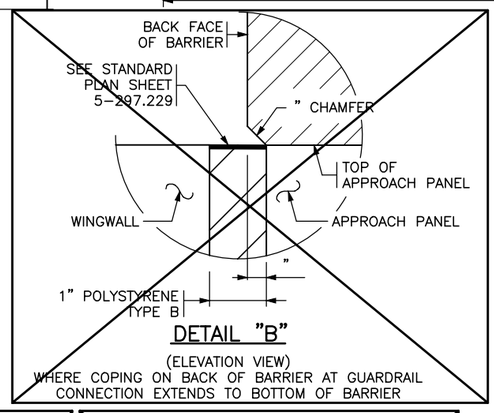

DETAIL "B"

(ELEVATION VIEW)
WHERE COPING ON BACK OF BARRIER AT GUARDRAIL CONNECTION EXTENDS TO BOTTOM OF BARRIER

INSIDE ELEVATION OF PARAPET

(INTEGRAL OR SEMI-INTEGRAL ABUTMENT) SEE DETAIL "A" FOR PARAPET ABUTMENT

Ⓐ INSIDE ELEVATION OF PARAPET

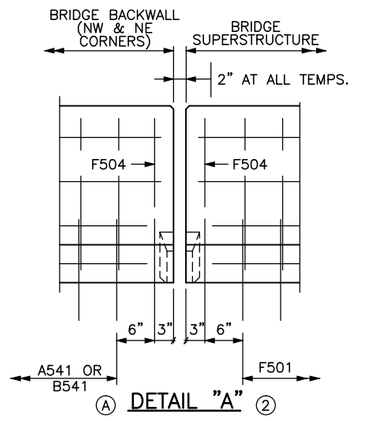

Ⓐ DETAIL "A" ②

(USE ONLY WITH STRIP SEAL EXPANSION DEVICE)
(EXPANSION DEVICE NOT SHOWN)

BILL OF REINFORCEMENT FOR PARAPET

	BAR	NO.	LENGTH	SHAPE	LOCATION
	F501	190	5'-2"		PARAPET VERTICAL
	~~F502~~		~~5'-4"~~		~~PARAPET VERTICAL~~
	F503	196	6'-5"		PARAPET VERTICAL
*	F504	6	4'-9"		PARAPET VERTICAL
	~~F505~~		~~8' 1"~~		~~PARAPET VERTICAL~~
	~~F706~~		~~6' 7"~~		~~PARAPET VERTICAL~~
	F407	32	47'-0"		PARAPET LONGIT.
	F408	16	1'-8"		PARAPET LONGIT.
	~~F409~~				~~PARAPET LONGIT.~~

* F504 WHEN STRIP SEAL EXPANSION DEVICE IS USED, WITHOUT RAISED SIDEWALK. (SEE DETAIL "A")

SHEET MODIFICATION:
Ⓐ DENOTES MODIFICATION TO STANDARD SHEET

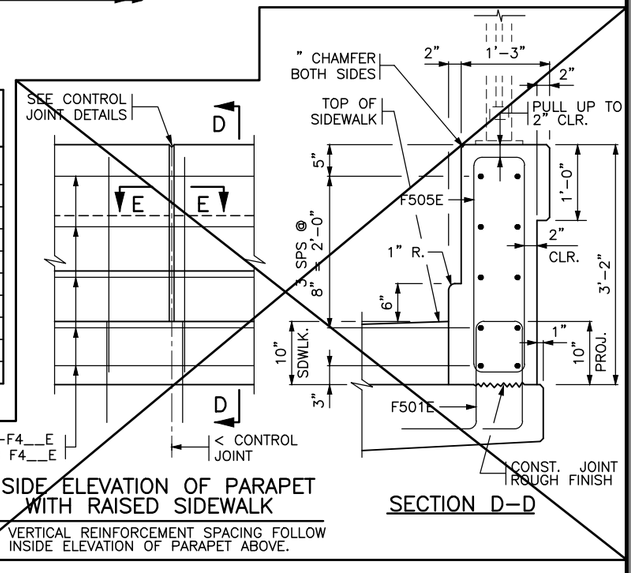

INSIDE ELEVATION OF PARAPET WITH RAISED SIDEWALK

FOR VERTICAL REINFORCEMENT SPACING FOLLOW INSIDE ELEVATION OF PARAPET ABOVE.

SECTION D–D

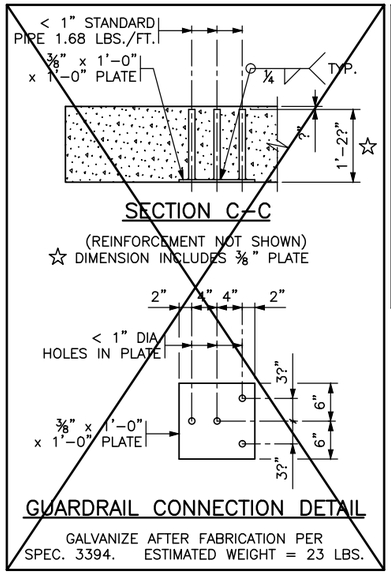

SECTION C–C

(REINFORCEMENT NOT SHOWN)
☆ DIMENSION INCLUDES ⅜" PLATE

GUARDRAIL CONNECTION DETAIL

GALVANIZE AFTER FABRICATION PER SPEC. 3394. ESTIMATED WEIGHT = 23 LBS.

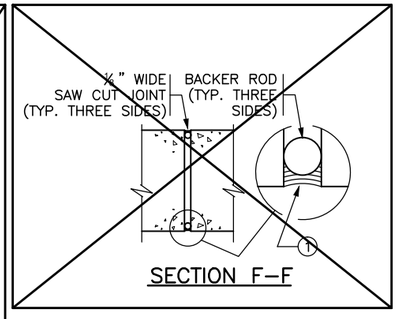

SECTION F–F

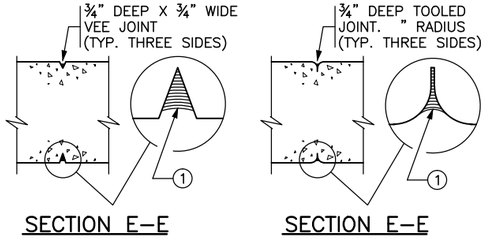

SECTION E–E
CONTRACTOR OPTION 1

SECTION E–E
CONTRACTOR OPTION 2

CONTROL JOINT DETAILS

WHEN USING SLIP FORM METHOD TO PLACE THE CONCRETE, CUT JOINT 3 INCHES DEEP USING MARGIN TROWEL OR SIMILAR MEANS IMMEDIATELY AFTER CONCRETE PLACEMENT (TYP. THREE SIDES)

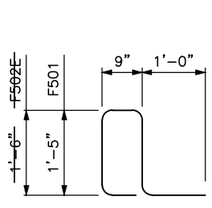

F501, ~~F502E~~

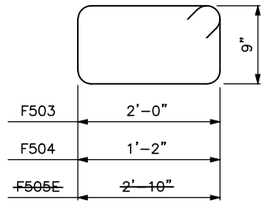

F503, F504 ~~AND F505E~~

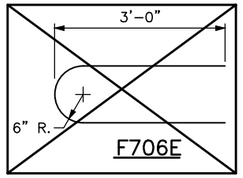

F706E

GENERAL NOTES

CONTINUOUSLY GROUND ALL METAL RAILINGS; SEE THE SPECIAL PROVISIONS. REFER TO THE ELECTRICAL PLANS AND ELECTRICAL SPECIAL PROVISIONS FOR DETAILS REGARDING BONDING MULTIPLE ELECTRICAL GROUNDING SYSTEMS.

~~PAYMENT~~ LENGTH SHALL BE MEASURED BETWEEN THE OUTSIDE FACES OF THE CONCRETE PARAPET.

CONCRETE PARAPET = 416 LBS./FT. (0.103 CU. YDS./FT.)

~~CONCRETE PARAPET W/ADJACENT SIDEWALK (BASED ON A 10" SIDEWALK HEIGHT) = 573 LBS./FT. (0.141 CU. YDS./FT.)~~

FINISH ALL EDGES OF PARAPET WITH ½" CHAMFER, EXCEPT WHERE OTHERWISE NOTED.

MAXIMUM SPACING OF CONTROL JOINTS ON SUPERSTRUCTURE, APPROACH AND WINGWALL SHALL BE 10 FT. SEE SUPERSTRUCTURE SHEET FOR JOINT SPACING.

~~GUARDRAIL CONNECTION TO BE STRUCTURAL STEEL, SPEC. 3306. GUARDRAIL CONNECTION AND NAME PLATE TO BE CONSIDERED INCIDENTAL TO "TYPE P-1 PARAPET CONCRETE (3S52)".~~

~~SEE STANDARD FIGURE 5-397.___ FOR LIGHT BLISTER DETAILS.~~

~~PARAPET QUANTITIES ARE LISTED IN SUMMARY OF QUANTITIES FOR SUPERSTRUCTURE.~~

① JOINT SEALANT PER MnDOT APPROVED/QUALIFIED PRODUCTS LIST – CRACK AND JOINT MATERIALS – SILICONE JOINT SEALERS.

Ⓐ ② REFER TO WATERPROOF EXPANSION DEVICE SHEET FOR COVER PLATE DETAILS.

FIG. 5-397.166(MOD.)

REVISION:

APPROVED: NOVEMBER 6, 2013
Nancy Daubenberger
STATE BRIDGE ENGINEER

CERTIFIED BY _____ LICENSED PROFESSIONAL ENGINEER 01/22/16 DATE
NAME: # LIC. NO. #####

TITLE: CONCRETE PARAPET (TYPE P-1) ~~WITH INTEGRAL END POST~~ (WITHOUT CONCRETE WEARING COURSE)

DES: BLF	DR: JFM	APPROVED:
CHK: DLS	CHK: DLS	

SHEET NO. 29 OF 45 SHEETS

BRIDGE NO. R0689

Dec, 14 2015 01:17 pm V:\3400_ADC\CAD\SEGMENT E2\PLAN SHEETS\STRUCTURES\MNHA-LRT\CBRR0689-BRG-RAL-001.dwg By: Joe.Menapace

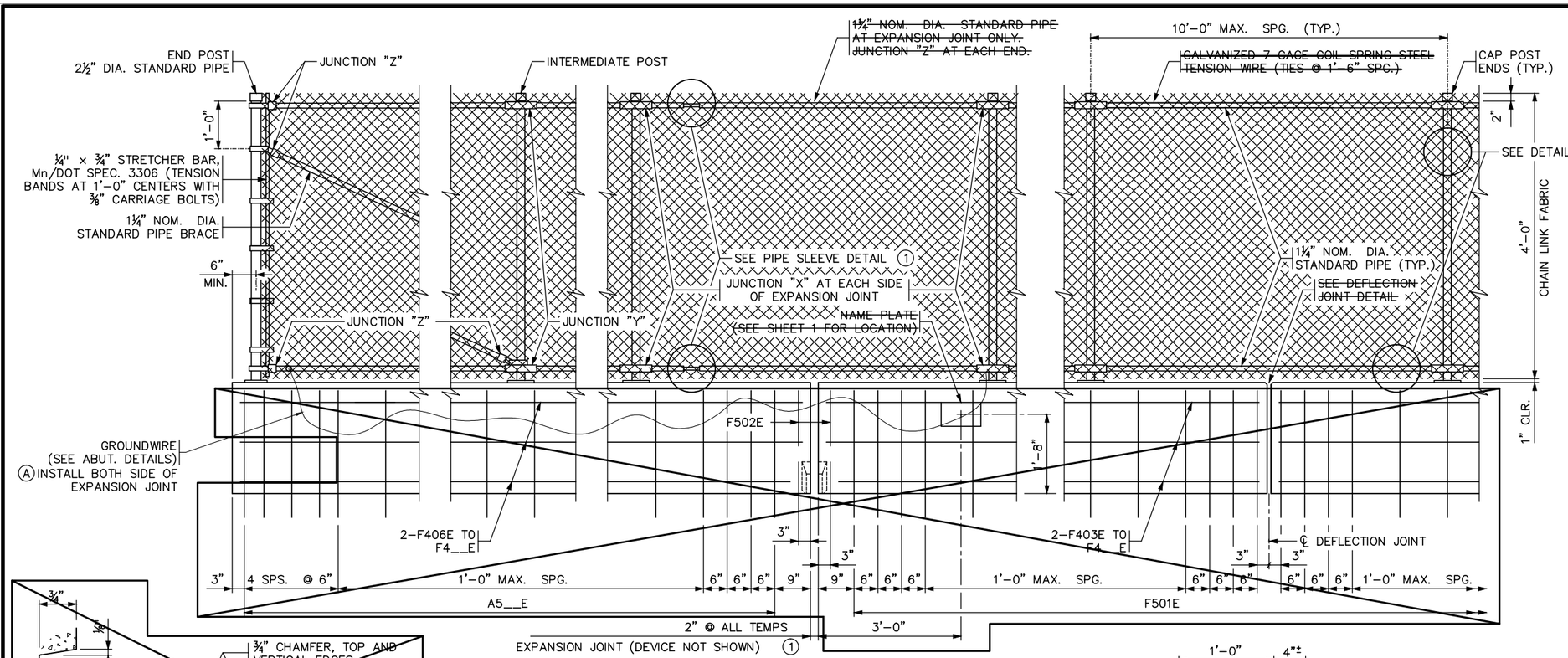

(A) INSIDE ELEVATION OF RAILING

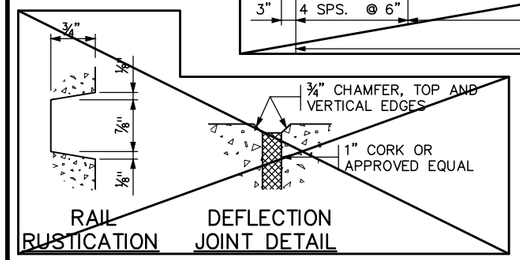

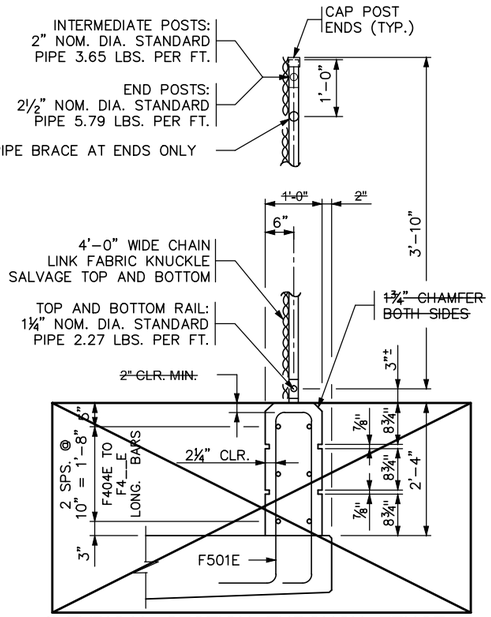

(A) TYPICAL SECTION THROUGH FENCE

INTERMEDIATE POST SHOWN

SHEET MODIFICATION:
(A) DENOTES MODIFICATION TO STANDARD SHEET

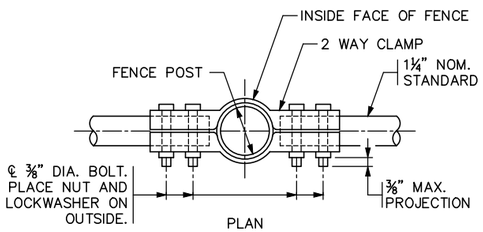

2 WAY CLAMP BENDING TABLE	
GRADE OF FENCE	Ø
0° TO 2°	0°
2° TO 6°	4°
6° TO 10°	8°

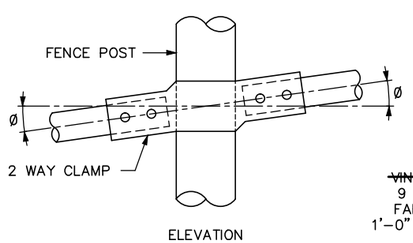

JUNCTION "X"

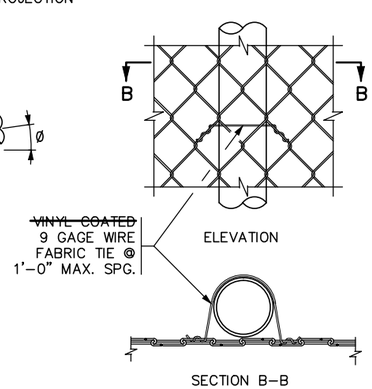

DETAIL "A"

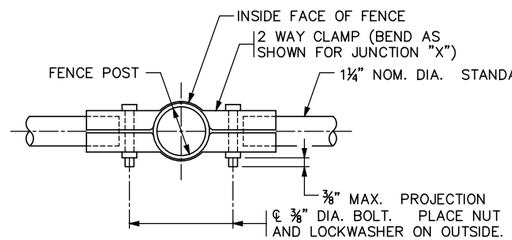

JUNCTION "Y"

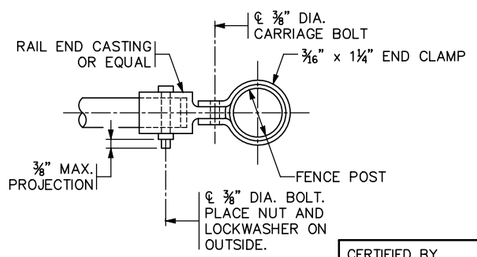

JUNCTION "Z"

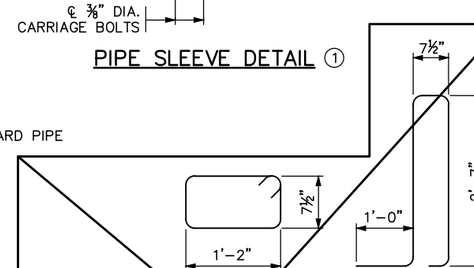

PIPE SLEEVE DETAIL (1)

BILL OF REINFORCEMENT FOR PARAPET				
BAR	NO.	LENGTH	SHAPE	LOCATION
F501E		7'-3"		RAIL BASE VERTICAL
F502E		4'-6"		RAIL BASE VERTICAL
F403E				RAIL BASE LONGITUDINAL
F404E				RAIL BASE LONGITUDINAL

GENERAL NOTES

(A) SEE CONCRETE PARAPET TYPE P-1 SHEET FOR PARAPET DIMENSIONS, REINFORCEMENT AND NOTES.

~~LENGTH OF "TYPE P-1 RAILING CONCRETE (3Y46 OR 3Y46A)" FOR PAYMENT SHALL BE MEASURED BETWEEN THE OUTSIDE FACES OF THE CONCRETE RAIL.~~

(A) LENGTH OF "WIRE FENCE DESIGN W-1" ~~FOR PAYMENT~~ SHALL BE MEASURED BETWEEN THE CENTERS OF END RAILPOSTS. SEE SHEET 28.

~~CONCRETE RAILING = 350 LBS./FT. (0.086 CU. YDS./FT.)~~

(A) FOR FENCE POST ANCHORAGES SEE SHEET 28.

~~MAXIMUM SPACING OF DEFLECTION JOINTS SHALL BE 20 FT. FOR SPACING OF FENCE POST, JOINTS AND ELECTRICAL GROUNDS, SEE SUPERSTRUCTURE SHEETS.~~

FENCE POSTS AND FENCE POST ANCHORAGES SHALL BE SET VERTICAL, UNLESS OTHERWISE NOTED.

℄ OF FENCE POST ANCHORAGE SHALL BE A MINIMUM OF 6" FROM JOINTS.

END POSTS AND BRACING SHALL BE AT 500 FT. MAXIMUM INTERVALS.

~~ALL POSTS SHALL HAVE A MEANS TO SECURELY HOLD THE TOP TENSION WIRE IN POSITION AND ALLOW FOR THE REMOVAL AND REPLACEMENT OF A POST WITHOUT DAMAGING THE TOP WIRE.~~

WIRE TIES MAY BE 9 GAGE GALVANIZED STEEL OR 0.179" MIN. ALUMINUM ALLOY CONFORMING TO A.S.T.M. B211, ALLOY 1100-H18. ~~USE 12½ GAGE GALVANIZED HOG RINGS FOR TENSION WIRE TIES.~~

~~ALL MATERIAL IN THE CONCRETE BASE AND END POST IS INCLUDED IN THE SUPERSTRUCTURE QUANTITIES.~~

SEE SPECIAL PROVISIONS FOR REQUIREMENTS NOT INCLUDED ON THIS SHEET. ~~AND FOR BASIS OF PAYMENT.~~

(1) PROVIDE PIPE SLEEVE IN SPAN BETWEEN THE VERTICAL POSTS AT EXPANSION JOINT. SEE SUPERSTRUCTURE SHEETS FOR LOCATION.

REVISED: 04-17-2013

APPROVED: DECEMBER 18, 2003

Daniel L Thorson
STATE BRIDGE ENGINEER

FIG. 5-397.119 (MOD.)

CERTIFIED BY _____ 01/22/16
LICENSED PROFESSIONAL ENGINEER — DATE

NAME: # LIC. NO. #####

TITLE: WIRE FENCE (DESIGN W-1) (A)

DES: BLF	DR: JFM	APPROVED:	BRIDGE NO.
CHK: DLS	CHK: DLS		R0689
SHEET NO. 30 OF 45 SHEETS			

Dec. 14 2015 01:17 pm V:\3400_ADC\CAD\SEGMENT E2\PLAN SHEETS\STRUCTURES\MNHA-LRT\CBRR0689-BRG-RAL-002.dwg By: Joe.Menapace

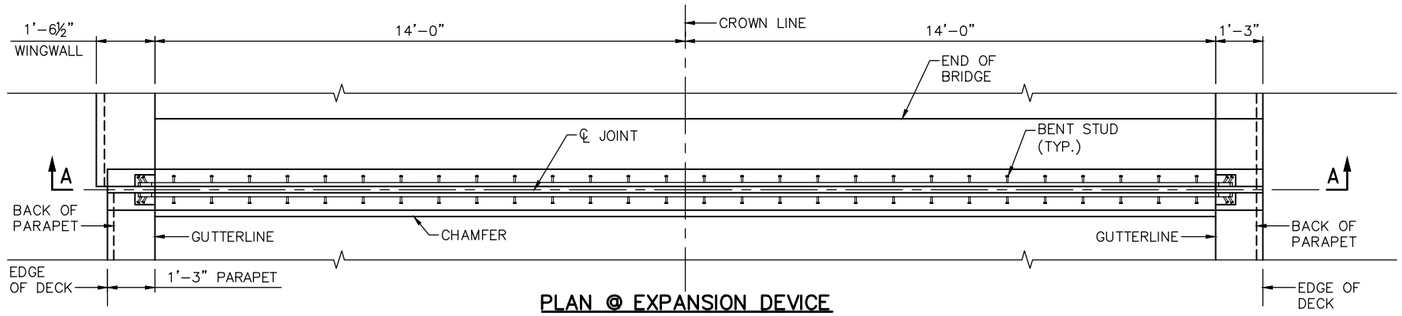

PLAN @ EXPANSION DEVICE

COVER PLATE NOT SHOWN FOR CLARITY
WEST JOINT SHOWN
EAST JOINT SIMILAR

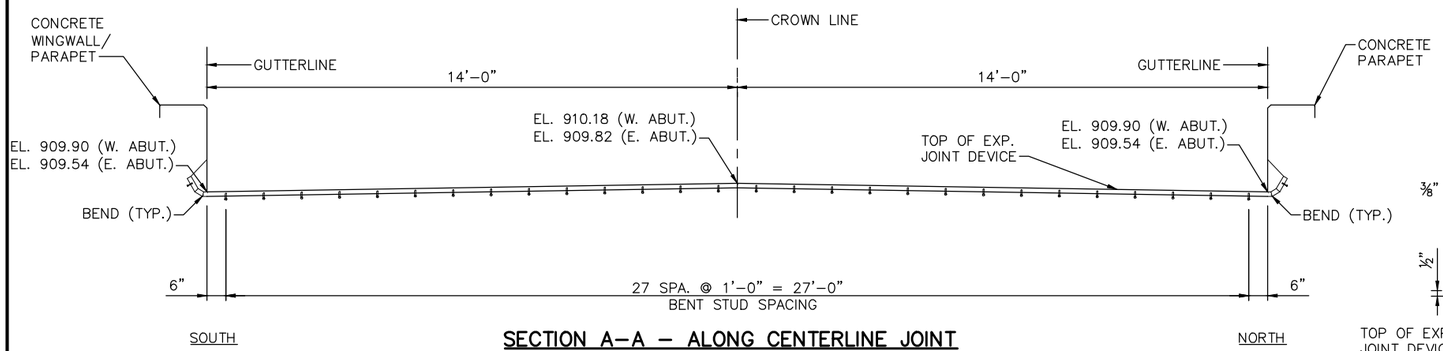

SECTION A–A – ALONG CENTERLINE JOINT

ELEVATIONS SHOWN ARE ½" BELOW TOP OF DECK
@ CENTERLINE JOINT (LOOKING BACKSTATION)

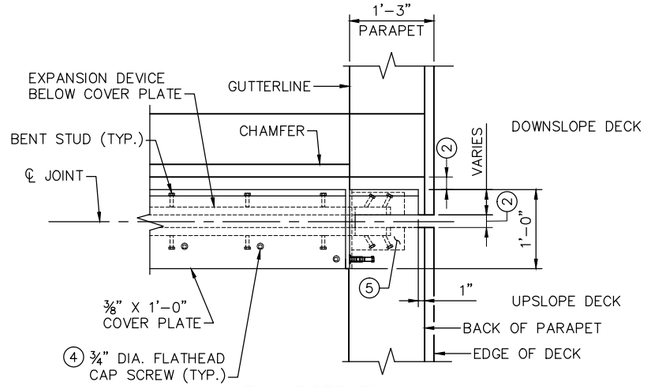

ENLARGED PLAN

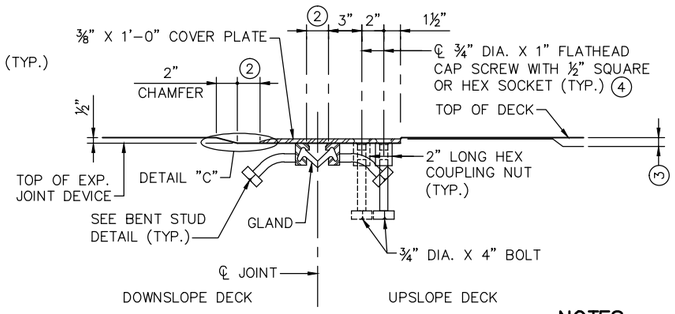

SECTION B–B

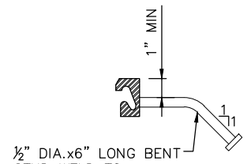

BENT STUD DETAIL

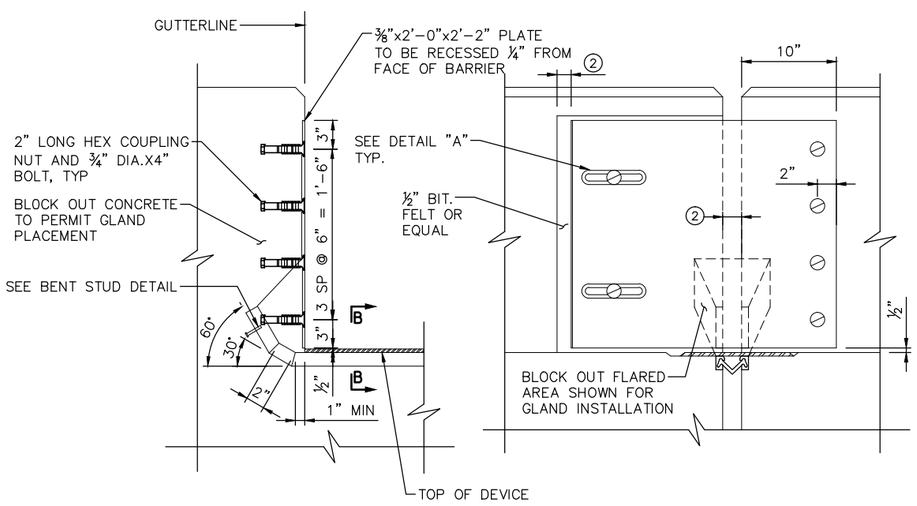

SECTION THROUGH PARAPET

PARAPET ELEVATION

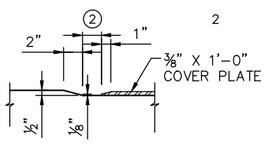

DETAIL "C"

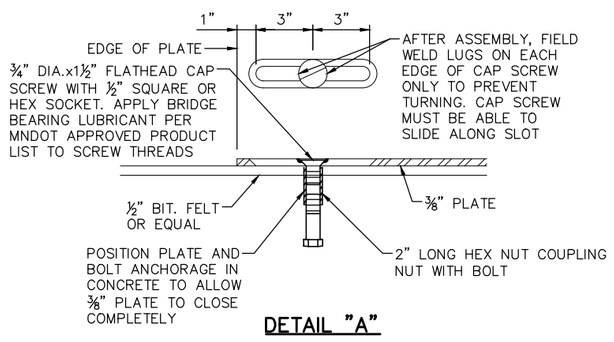

DETAIL "A"

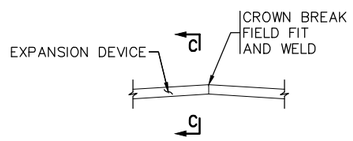

DETAIL "B"

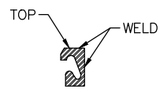

SECTION C–C

NOTES:

GALVANIZE STRUCTURAL STEEL AFTER FABRICATION AS PER SPEC. 3394. GALVANIZE FASTENERS AS PER SPEC. 3392.

JOINTS IN EXTRUSION SHALL BE LOCATED AT BREAKS IN TRANSVERSE PROFILE AND AS OTHERWISE REQUIRED. JOINTS SHALL BE CLOSE FIT AND WELDED. REPAIR AFTER WELDING AS PER SPEC. 2471.3.L.

STRUCTURAL STEEL SHALL COMPLY WITH SPEC. 3306.

EXPANSION DEVICE SHALL BE STRAIGHTENED TO A TOLERANCE OF ⅛" IN 10 FT.

CAP SCREWS SHALL BE COUNTERSUNK 1/16" BELOW TOP OF PLATE.

(1) EXPANSION DEVICE ELEVATIONS SHOWN ARE ½" BELOW FINISHED DECK ELEVATIONS. COVER PLATE SHALL BE INSTALLED PER TOLERANCE SHOWN IN SECTION B–B.

(2) 2" AT ALL TEMPERATURES.

(3) TOP OF CONCRETE TO TOP OF COVER PLATE ⅛" (¼" MAX.).

(4) MAXIMUM TRANSVERSE SPACING OF ¾" DIA. FLATHEAD SCREWS AND COUPLINGS SHALL BE 1'–0".

(5) MINIMAL AMOUNT OF CURB CONCRETE ABOVE EXPANSION DEVICE SHALL BE BLOCKED OUT FOR GLAND INSTALLATION.

NO.	DATE	BY	CHECK	DESIGN	REVISION / SUBMITTAL

DESIGNED BY: CJS | CHECKED BY: DLS
DRAWN BY: MRD | CHECKED BY: DLS

AECOM Kimley»Horn

90% SUBMISSION - 01/22/16

METROPOLITAN COUNCIL

SOUTHWEST Green Line LRT Extension

CIVIL - VOLUME 4D
MINNEHAHA CREEK LRT BRIDGE
BRIDGE R0689
WATERPROOF EXPANSION DEVICE

DISCIPLINE: STRUCTURES
SHEET NAME: CBRR0689-BRG-EXP-001

SHEET 31 OF 45

Dec, 14 2015 03:23 pm V:\3400_ADC\CAD\SEGMENT E2\PLAN SHEETS\STRUCTURES\MNHA-LRT\CBRR0689-BRG-EXP-001.dwg By: Zack.Gasse

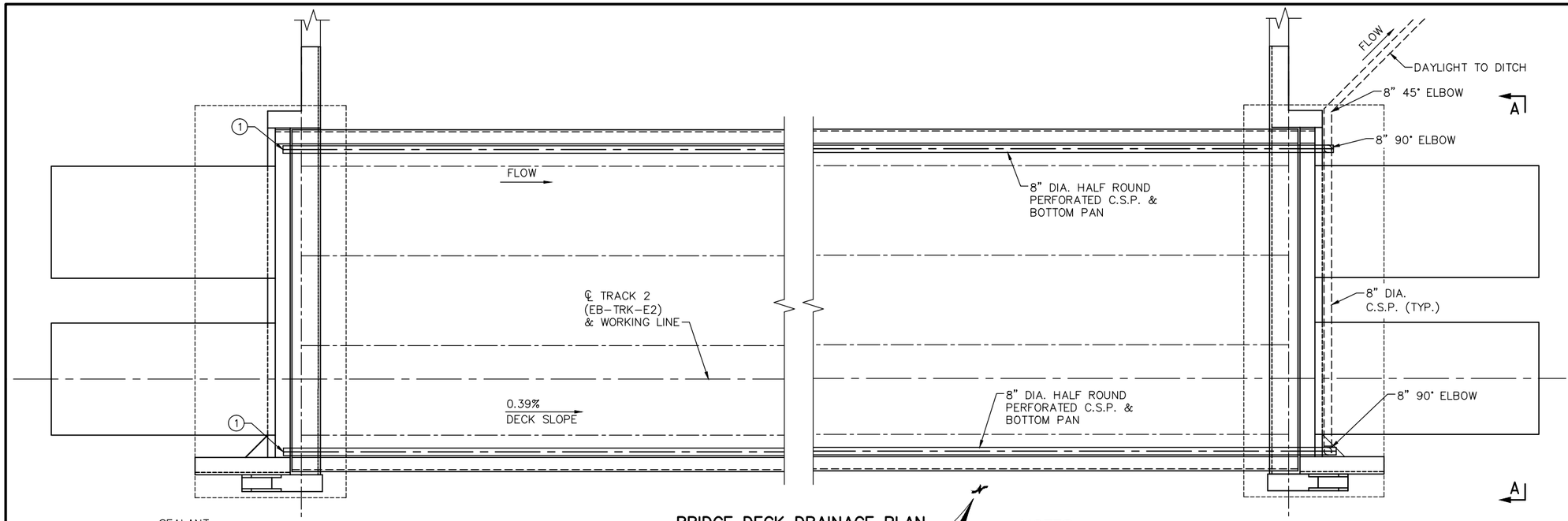

BRIDGE DECK DRAINAGE PLAN

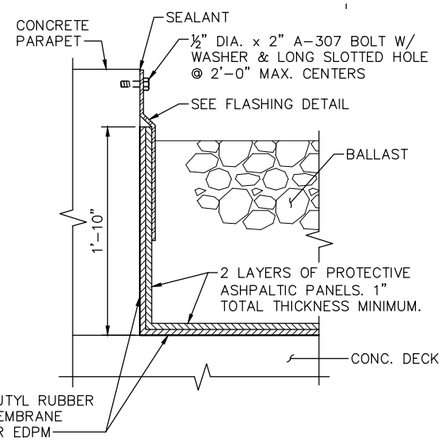

TRANS. SECTION AT CONC. DECK

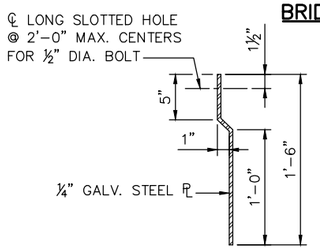

FLASHING DETAIL

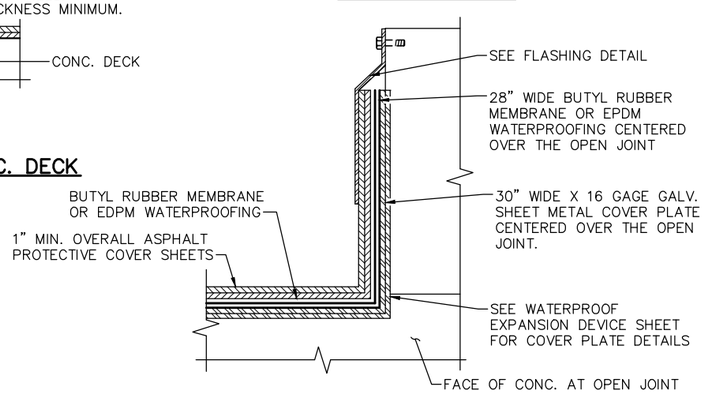

TRANS. SECTION AT OPEN JOINT

NOTES:

FOR SECTION A-A, SEE SHEET 33.

ALL PIPE SHALL COMPLY WITH SPEC. 3326.

ALL STEEL COMPONENTS OF THE DRAINAGE SYSTEM INCLUDING PIPES, BOTTOM PANS, COVERS, CLAMPS, END PLATES, AND HARDWARE SHALL BE GALVANIZED IN ACCORDANCE WITH SPEC. 3392 AND SPEC. 3394.

(1) TERMINATE DRAIN AT THE BACK OF THE WEST ABUTMENT EXPANSION JOINT BLOCK.

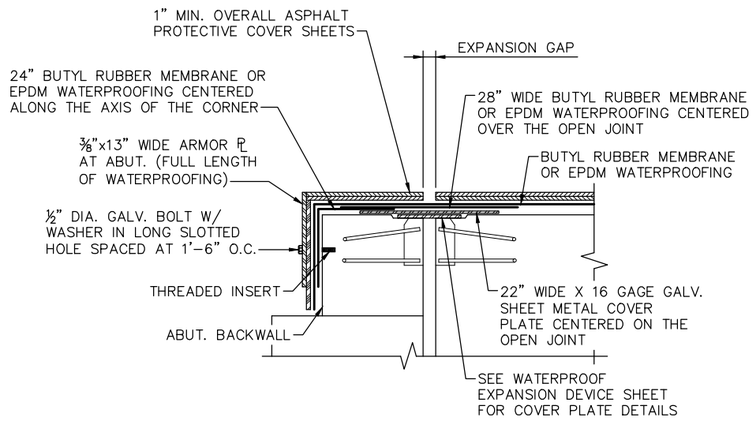

WATERPROOFING AT ABUTMENT

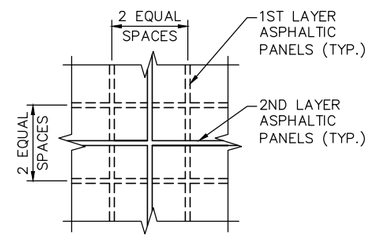

TYPICAL ASPHALT PANEL PLACEMENT

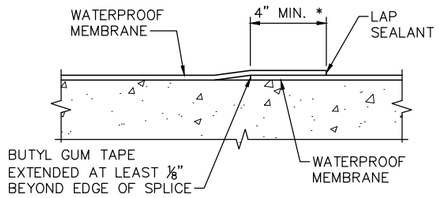

BUTYL RUBBER MEMBRANE OR EPDM WATERPROOFING SPLICE DETAIL

* ALL CONTACT SURFACES TO BE THOROUGHLY CLEANED & CEMENTED

NO.	DATE	BY	CHECK	DESIGN	REVISION / SUBMITTAL

DESIGNED BY: CJS | CHECKED BY: DLS
DRAWN BY: KAG | CHECKED BY: DLS

AECOM Kimley»Horn

90% SUBMISSION - 01/22/16

METROPOLITAN COUNCIL

SOUTHWEST Green Line LRT Extension

CIVIL - VOLUME 4D
MINNEHAHA CREEK LRT BRIDGE
BRIDGE R0689
DECK DRAINAGE AND WATERPROOFING 1

DISCIPLINE: STRUCTURES
SHEET NAME: CBRR0689-BRG-DTL-001

SHEET 32 OF 45

Dec, 14 2015 01:18 pm V:\3400_ADC\CAD\SEGMENT E2\PLAN SHEETS\STRUCTURES\MNHA-LRT\CBRR0689-BRG-DTL-001.dwg By: Joe.Menapace

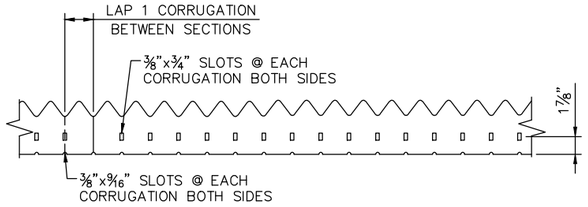

COVER ELEVATION

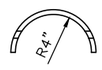

COVER SECTION

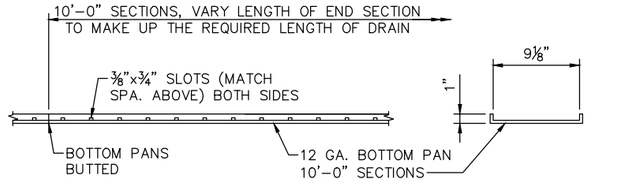

BOTTOM PAN ELEVATION

BOTTOM PAN SECTION

DECK DRAIN DETAILS

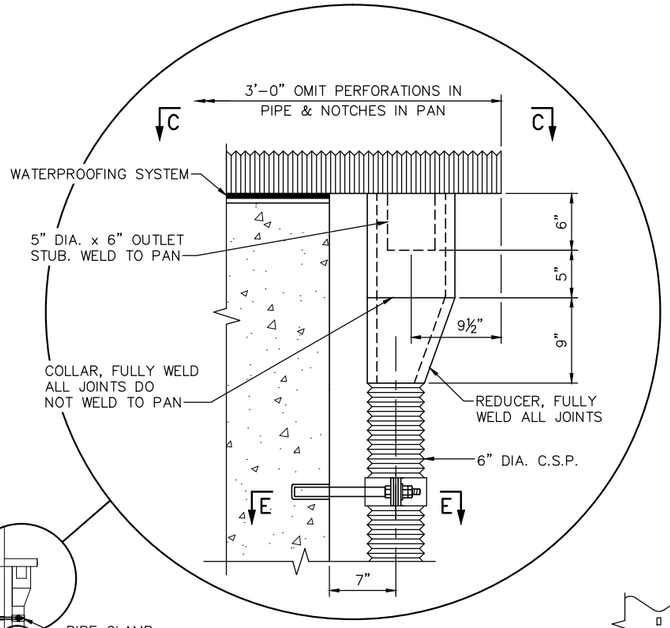

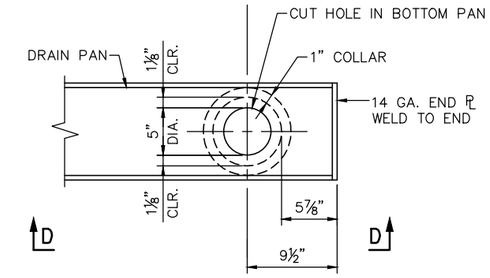

VIEW C–C

(8" DIA. 12 GA. HALF–ROUND
C.S.P. NOT SHOWN)

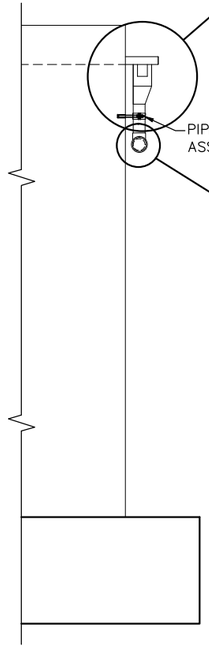

SECTION B–B

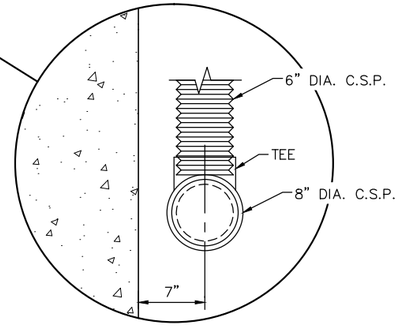

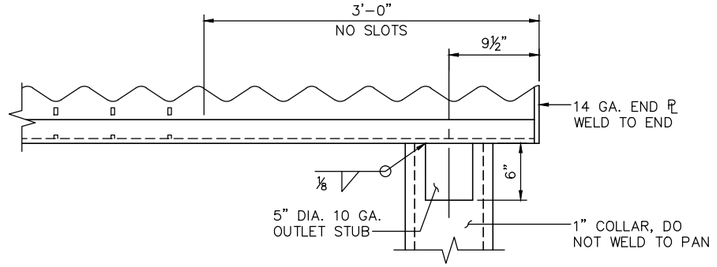

VIEW D–D

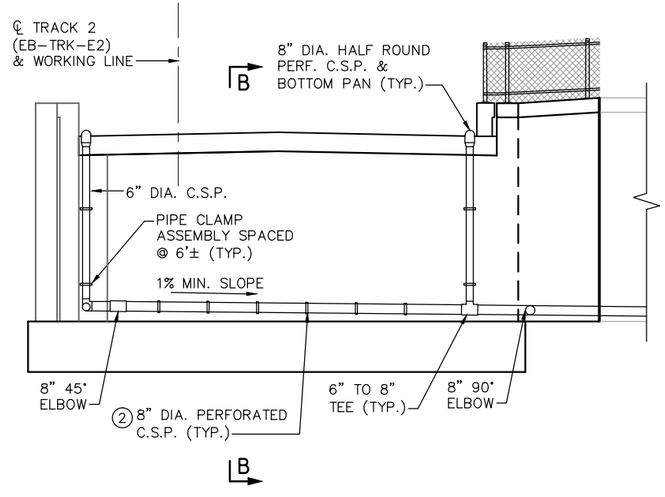

SECTION A–A

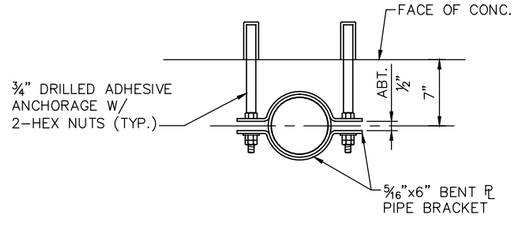

SECTION E–E

(PIPE CLAMP ASSEMBLY)

NO.	DATE	BY	CHECK	DESIGN	REVISION / SUBMITTAL

DESIGNED BY: CJS CHECKED BY: DLS
DRAWN BY: KAG CHECKED BY: DLS

AECOM Kimley»Horn

90% SUBMISSION - 01/22/16

METROPOLITAN COUNCIL

SOUTHWEST Green Line LRT Extension

CIVIL - VOLUME 4D
MINNEHAHA CREEK LRT BRIDGE
BRIDGE R0689
DECK DRAINAGE AND WATERPROOFING 2

DISCIPLINE: STRUCTURES

SHEET NAME: CBRR0689-BRG-DTL-002

SHEET 33 OF 45

Dec, 14 2015 01:19 pm V:\3400_ADC\CAD\SEGMENT E2\PLAN SHEETS\STRUCTURES\MNHA–LRT\CBRR0689–BRG–DTL–002.dwg By: Joe.Menapace

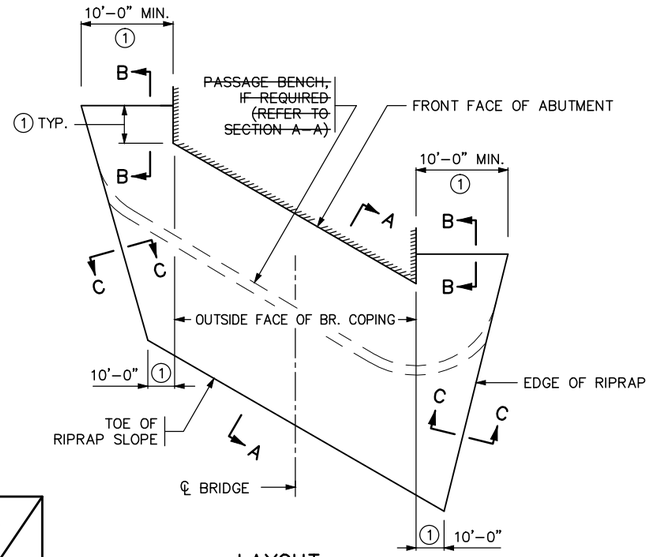

LAYOUT

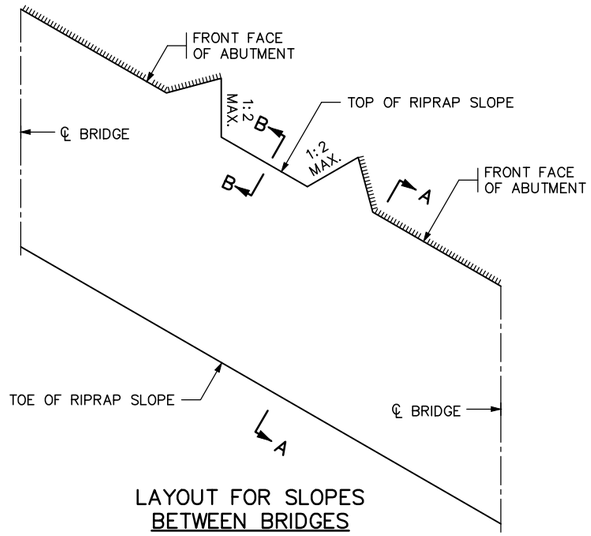

LAYOUT FOR SLOPES BETWEEN BRIDGES

GENERAL NOTES

GEOTEXTILE FILTER TYPE 7 PER SPEC. 3733, BY THE SQ. YD.

RIPRAP PER SPEC. 2511, RANDOM RIPRAP CLASS IV BY THE CU. YD.

SLOPES ARE EXPRESSED AS A RATIO OF VERTICAL DISTANCE : HORIZONTAL DISTANCE.

SLOPE BOTTOM OF TRENCHES 1:20 PARALLEL TO ABUTMENT FACE TO PROVIDE POSITIVE DRAINAGE.

(1) SEE PLAN SHEET NO. 1 FOR DIMENSIONS, AND FOR ELEVATIONS OF RIPRAP TOE. ~~AND PASSAGE BENCHES.~~

(2) PLACE RIPRAP IN TRENCH TO HOLD THE GEOTEXTILE FABRIC IN PLACE BEFORE PLACING THE REST OF THE RIPRAP (FROM THE BOTTOM OF THE SLOPE).

(3) OVERLAP GEOTEXTILE FILTER 2'-0" MINIMUM.

(4) WRAP GEOTEXTILE FILTER AROUND TOE, OVERHANG BETWEEN 1ST AND 2ND LAYER OF RIPRAP. USE HAND PLACEMENT OR SIMILAR METHODS TO ESTABLISH PROFILE AND PLACE FABRIC IF UNDER WATER.

(5) BURY EDGES OF GEOTEXTILE FILTER TO DIRECT WATER FLOW OVER THE FABRIC WITHOUT UNDERMINING.

(6) OMIT THE TRENCH SHOWN IN DETAIL "D" AND THE 15'-0" MAXIMUM SPACING BETWEEN TRENCHES FOR SLOPES 1:3 OR FLATTER.

(7) ~~SURFACE BENCHES WITH AGGREGATE CLASS 5 (INCIDENTAL TO RIPRAP). TIE BENCHES TO NATURAL GROUNDLINES OUTSIDE OF BRIDGE.~~

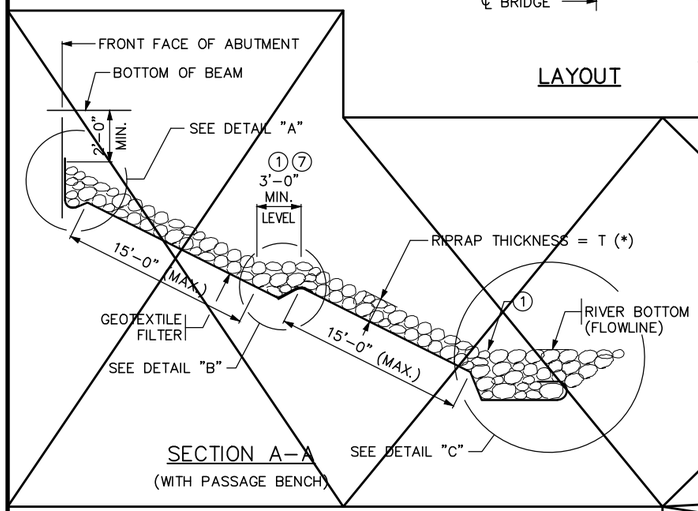

SECTION A-A
(WITH PASSAGE BENCH)

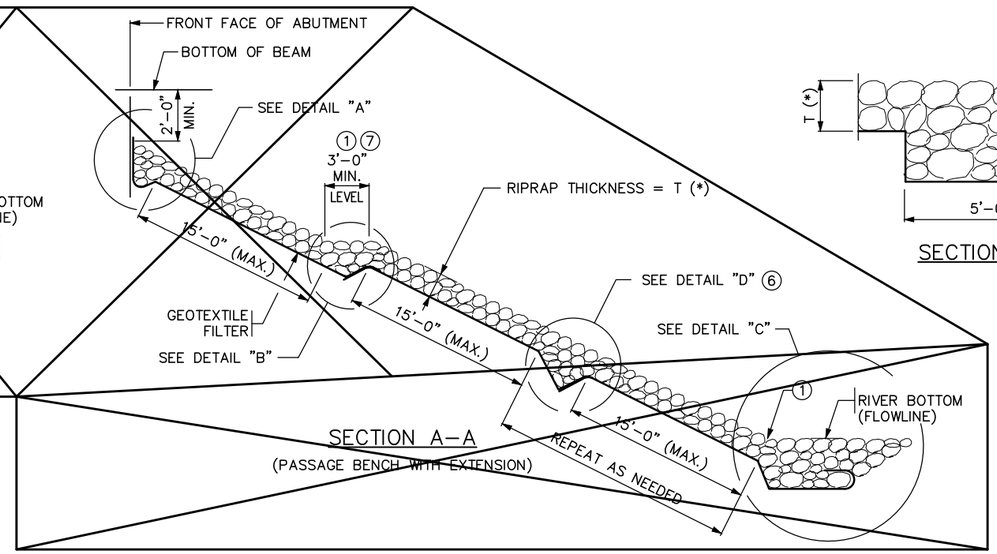

SECTION A-A
(PASSAGE BENCH WITH EXTENSION)

SECTION A-A
(WITHOUT PASSAGE BENCH)

SECTION C-C

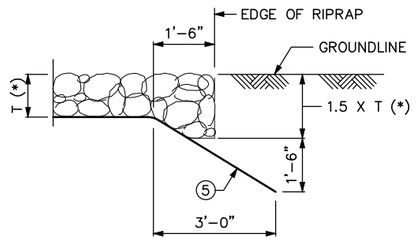

SECTION B-B

*	DIMENSION T
	~~CLASS III = 1' 6"~~
	CLASS IV = 2'-0"

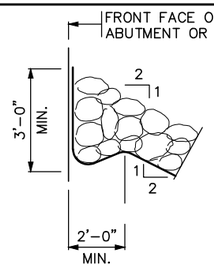

DETAIL "A"

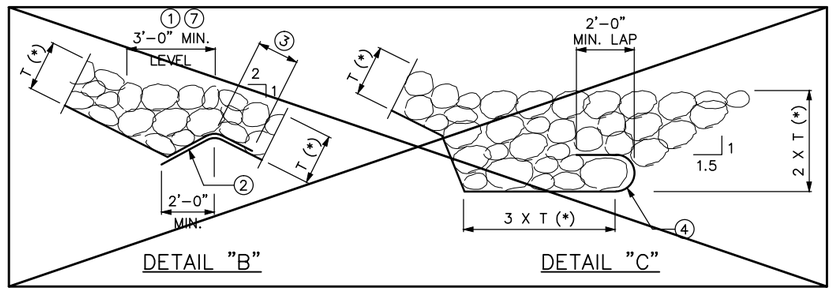

DETAIL "B" DETAIL "C"

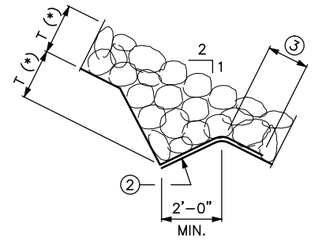

DETAIL "D"

REVISED: 09-11-2014

APPROVED: MAY 24, 2011
Nancy Daubenberger
STATE BRIDGE ENGINEER

CERTIFIED BY _____ 01/22/16
LICENSED PROFESSIONAL ENGINEER — DATE
NAME: ENGINEER _____ LIC. NO. #####

TITLE: RIPRAP SLOPE WITH GEOTEXTILE FILTER (SLOPES 1:2 AND FLATTER)

FIG. 5-397.309

DES: BAW	DR: LMT	APPROVED:	BRIDGE NO.
CHK: BLF	CHK: BLF		R0689
SHEET NO. 34 OF 45 SHEETS			

Dec. 14 2015 01:19 pm V:\3400_ADC\CAD\SEGMENT E2\PLAN SHEETS\STRUCTURES\MNHA-LRT\CBRR0689-BRG-DTL-003.dwg By: Joe.Menapace

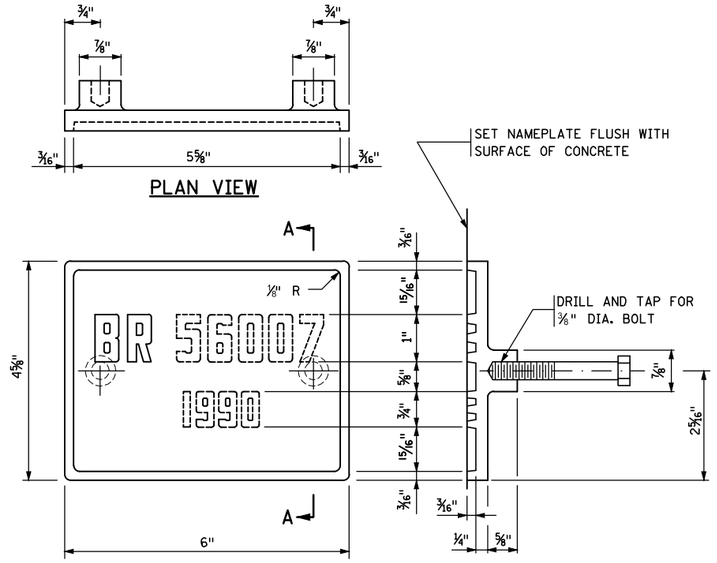

THE DASHED NUMBERS SHOWN ABOVE ARE FOR ILLUSTRATION.
DATA TO BE SHOWN ON NAMEPLATE IS AS FOLLOWS:

BRIDGE R0689

YEAR ①

NUMBERS FOR NAMEPLATE

NOTES:

MATERIAL SHALL COMPLY WITH SPEC. 3327.

LETTERS AND NUMBERS SHALL CONFORM TO THOSE SHOWN.

DRAFT ON LETTERS AND NUMBERS SHALL NOT BE MORE THAN 3" IN 12".

HORIZONTAL SPACING OF LETTERS AND NUMBERS SHALL PRODUCE A BALANCED LAYOUT IN PROPORTION TO SPACING SHOWN.

TOP SURFACE OF LETTERS, NUMBERS AND FRAMES SHALL BE BURNISHED.

FURNISH 2 STEEL BOLTS ⅜" DIA. x 3" LONG WITH EACH PLATE.

ALL DIMENSIONS FOR ¾" HIGH LETTERS AND NUMBERS SHALL BE IN DIRECT PROPORTION TO THOSE SHOWN FOR THE 1" HIGH LETTERS AND NUMBERS.

① YEAR OF CONSTRUCTION

APPROVED: NOVEMBER 22, 2002	STATE OF MINNESOTA DEPARTMENT OF TRANSPORTATION	REVISION 09-11-2014	DETAIL NO.
Daniel L Worgan STATE BRIDGE ENGINEER	BRIDGE NAMEPLATE (FOR NEW BRIDGES)		B101

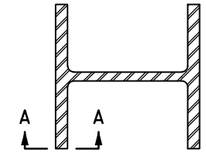

SECTION AT SPLICE

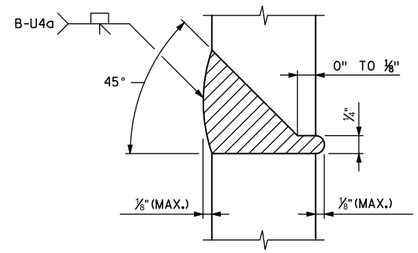

SECTION A-A

100% BUTT WELDED PILE SPLICE

NOTES:

CELLULOSIC TYPE ELECTRODES E-6010 OR E-6011 SHALL BE USED FOR 100% BUTT WELDED SPLICES.

ELECTRODES WHICH HAVE BECOME WET, SOILED OR DAMAGED SHALL NOT BE USED.

WELDING SHALL NOT BE DONE WHEN THE AMBIENT TEMPERATURE IS LOWER THAN 0° F. OR WHEN THE PILE IS WET OR EXPOSED TO FALLING RAIN OR SNOW. WHEN THE PILE METAL TEMPERATURE IS BELOW 32° F., THE PILE METAL IN THE AREA OF THE WELD SHALL BE HEATED TO A MINIMUM TEMPERATURE OF 70° F. AND MAINTAINED AT THIS TEMPERATURE DURING WELDING.

APPROVED: NOVEMBER 22, 2002	STATE OF MINNESOTA DEPARTMENT OF TRANSPORTATION	REVISION: 11-06-2013	DETAIL NO.
Daniel L Worgan STATE BRIDGE ENGINEER	PILE SPLICE (STEEL H BEARING PILES 10" TO 14")		B202

NO.	DATE	BY	CHECK	DESIGN	REVISION / SUBMITTAL

DESIGNED BY: CJS CHECKED BY: DLS
DRAWN BY: JFM CHECKED BY: DLS

AECOM Kimley»Horn

90% SUBMISSION - 01/22/16

METROPOLITAN COUNCIL

SOUTHWEST Green Line LRT Extension

CIVIL - VOLUME 4D
MINNEHAHA CREEK LRT BRIDGE
BRIDGE R0689
BRIDGE DETAILS 1

DISCIPLINE: STRUCTURES
SHEET NAME: CBRR0689-BRG-DTL-004

SHEET 35 OF 45

Dec. 14 2015 01:20 pm V:\3400_ADC\CAD\SEGMENT E2\PLAN SHEETS\STRUCTURES\MNHA-LRT\CBRR0689-BRG-DTL-004.dwg By: Joe.Menapace

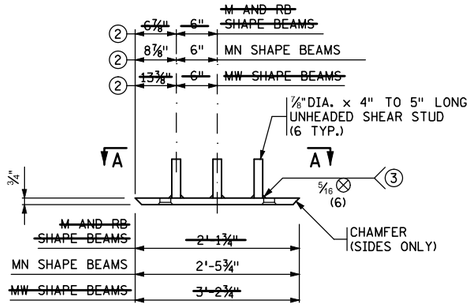

FRONT ELEVATION

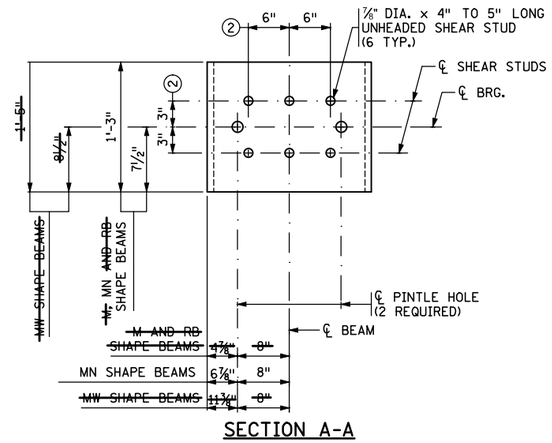

SECTION A-A

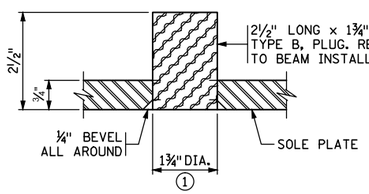

PINTLE HOLE DETAIL

NOTES:

MATERIAL TO BE STRUCTURAL STEEL PER MnDOT SPEC. 3306.

WELDED STUDS TO BE WELDABLE CARBON STEEL PER MnDOT SPEC. 3391.2D.

SOLE PLATE FOR BEARING ASSEMBLY TO BE GALVANIZED PER MnDOT SPEC. 3394 AFTER FABRICATION.

PINTLE HOLES SHALL BE FREE OF ZINC BUILD UP FROM GALVANIZING.

~~SOLE PLATES ARE INCIDENTAL TO PRESTRESSED CONCRETE BEAMS.~~

(1) FOR 1½" DIA. PINTLES.

(2) THESE DIMENSIONS MAY BE MODIFIED TO CLEAR PRESTRESSED STRANDS. HOWEVER, CHANGES MUST BE APPROVED BY THE ENGINEER.

(3) THE REQUIREMENTS FOR WELDING STUDS SHALL COMPLY WITH AASHTO/AWS D1.1.

APPROVED: SEPTEMBER 22, 2011	STATE OF MINNESOTA DEPARTMENT OF TRANSPORTATION	REVISED	DETAIL NO.
Nancy Daubenberger STATE BRIDGE ENGINEER	SOLE PLATE (PRESTRESSED CONCRETE BEAMS) (FOR BEARINGS WITH PINTLES)		B303

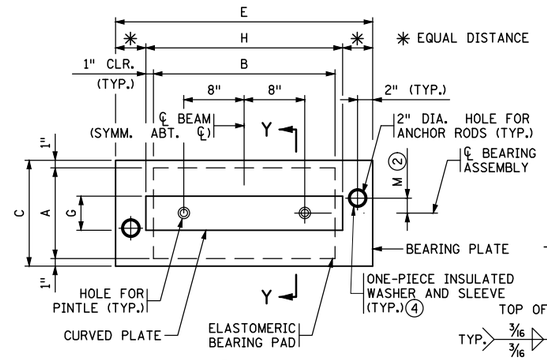

PLAN

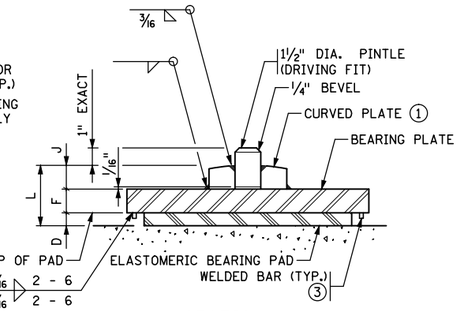

SECTION Y-Y

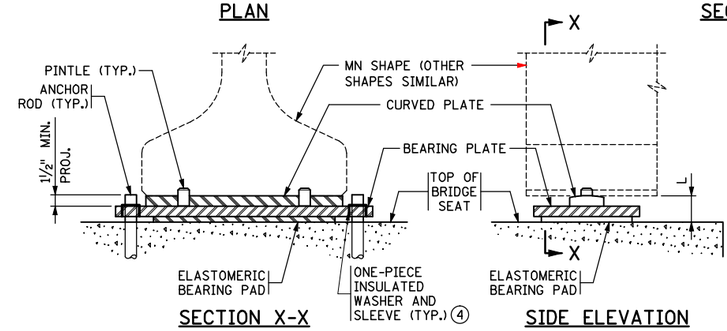

SECTION X-X

SIDE ELEVATION

ANCHOR RODS NOT SHOWN

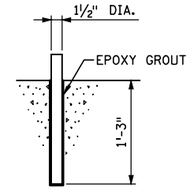

ANCHOR ROD DETAIL

TABLE

ASSEMBLY TYPE	LOCATION	BEAM SIZE	BEARING PAD SIZE A	BEARING PAD SIZE B	BEARING PAD SIZE D	SHAPE FACTOR	BEARING PLATE SIZE C	BEARING PLATE SIZE E	BEARING PLATE SIZE F	CURVED PLATE SIZE G	CURVED PLATE SIZE H	CURVED PLATE SIZE J	ANCHOR ROD OFFSET +/- (2)	ANCHOR ROD OFFSET M	ASSY. HEIGHT L	CURVED PLATE R (1)
F-1	E. ABUT.	MN54	12"	24"	½"	8.0	14"	38"	1½"	4½"	26"	1¼"	-	0"	3¼"	16"

NOTES:

PROVIDE ELASTOMERIC MATERIALS AND PAD CONSTRUCTION PER SPEC. 3741.

PROVIDE STEEL PLATES PER SPEC. 3306.

PROVIDE ANCHOR RODS PER SPEC. 3385, TYPE A. GALVANIZE PER SPEC. 3392.

PROVIDE PINTLES PER SPEC. 3309.

GALVANIZE STRUCTURAL STEEL BEARING ASSEMBLY AFTER FABRICATION PER SPEC. 3394, EXCEPT AS NOTED.

~~PAYMENT FOR BEARING ASSEMBLY INCLUDES ALL MATERIAL ON THIS DETAIL.~~

(1) THE MIN. RADIUS IS 16" UNLESS OTHERWISE SPECIFIED IN THE TABLE. THE MAX. RADIUS IS 24". FINISH TO 250 MICRO. THE FINISHED THICKNESS OF THE PLATE MAY BE 1/16" LESS THAN SHOWN.

(2) "+" DENOTES OFFSET AS SHOWN. "-" DENOTES OFFSET OPPOSITE OF SHOWN.

(3) ⅜" X ⅜" BAR INSTALLED ON BEARING PLATE AROUND PERIMETER OF BEARING PAD. BAR LENGTH IS 2" LESS THAN ADJACENT PAD DIMENSION, CENTERED ON PAD. CENTERLINE OF BAR TO EDGE OF PAD DIMENSION = ½".

(4) INSULATED SLEEVE SHALL EXTEND A MINIMUM OF ½" BELOW BOTTOM OF BEARING PLATE.

DESIGN DATA:
MAXIMUM HORIZONTAL LOAD IS 70 KIPS FOR 1½" PINTLES.

APPROVED: SEPTEMBER 22, 2011	STATE OF MINNESOTA DEPARTMENT OF TRANSPORTATION	REVISED	DETAIL NO.
Nancy Daubenberger STATE BRIDGE ENGINEER	CURVED PLATE BEARING ASSEMBLY (PRESTRESSED CONCRETE BEAMS) (FIXED)	11-06-2013 11-03-2015	B310 (MOD.)

NO.	DATE	BY	CHECK	DESIGN	REVISION / SUBMITTAL

DESIGNED BY: DJW CHECKED BY: SAD
DRAWN BY: JFM CHECKED BY: DLS

AECOM Kimley»Horn

90% SUBMISSION - 01/22/16

METROPOLITAN COUNCIL

SOUTHWEST Green Line LRT Extension

CIVIL - VOLUME 4D
MINNEHAHA CREEK LRT BRIDGE
BRIDGE R0689
BRIDGE DETAILS 2

DISCIPLINE: STRUCTURES
SHEET NAME: CBRR0689-BRG-DTL-005

SHEET 36 OF 45

Dec. 14 2015 01:20 pm V:\3400_ADC\CAD\SEGMENT E2\PLAN SHEETS\STRUCTURES\MNHA-LRT\CBRR0689-BRG-DTL-005.dwg By: Joe.Menapace

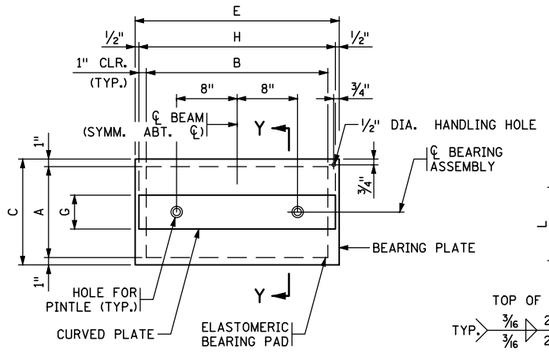

PLAN

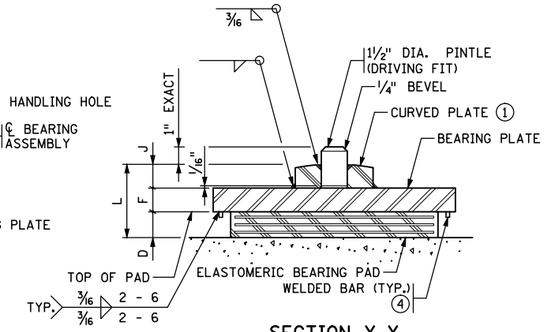

SECTION Y-Y

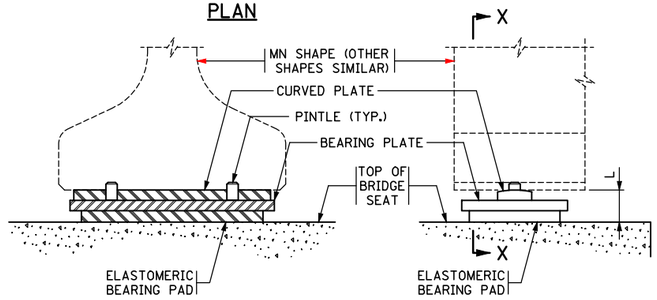

SECTION X-X

SIDE ELEVATION

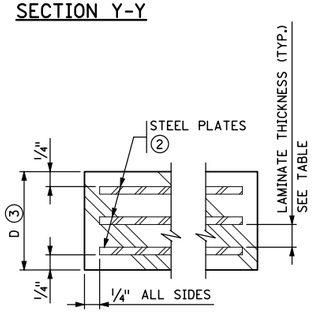

SECTION THROUGH ELASTOMERIC BEARING PAD

TABLE

ASSEMBLY TYPE	LOCATION	BEAM SIZE	BEARING PAD SIZE			STEEL PLATES		LAMINATES		SHAPE FACTOR	BEARING PLATE SIZE			CURVED PLATE SIZE			ASSY. HEIGHT	CURVED PLATE
			A	B	D	NO.	THICK.	NO.	THICK.		C	E	F	G	H	J	L	R ①
E-1	W. ABUT.	MN54	12"	24"	1⅞"	3	⅛"	2	½"	8.0	14"	27"	1½"	4½"	26"	1¼"	4⅝"	16"

NOTES:

PROVIDE ELASTOMERIC MATERIALS AND PAD CONSTRUCTION PER SPEC. 3741.

PROVIDE STEEL PLATES PER SPEC. 3306.

PROVIDE PINTLES PER SPEC. 3309.

GALVANIZE STRUCTURAL STEEL BEARING ASSEMBLY AFTER FABRICATION PER SPEC. 3394, EXCEPT AS NOTED.

~~PAYMENT FOR BEARING ASSEMBLY INCLUDES ALL MATERIAL ON THIS DETAIL.~~

① THE MIN. RADIUS IS 16" UNLESS OTHERWISE SPECIFIED IN THE TABLE. THE MAX. RADIUS IS 24". FINISH TO 250 MICRO. THE FINISHED THICKNESS OF THE PLATE MAY BE 1⁄16" LESS THAN SHOWN.

② DO NOT GALVANIZE THESE PLATES.

③ THE TOTAL THICKNESS SHOWN INCLUDES THE STEEL PLATES.

④ ⅜" X ⅜" BAR INSTALLED ON BEARING PLATE AROUND PERIMETER OF BEARING PAD. BAR LENGTH IS 2" LESS THAN ADJACENT PAD DIMENSION, CENTERED ON PAD. CENTERLINE OF BAR TO EDGE OF PAD DIMENSION = ½".

DESIGN DATA:
MAXIMUM HORIZONTAL LOAD IS 70 KIPS FOR 1½" PINTLES.

APPROVED: SEPTEMBER 22, 2011	STATE OF MINNESOTA DEPARTMENT OF TRANSPORTATION	REVISED	DETAIL NO.
Nancy Daubenberger STATE BRIDGE ENGINEER	CURVED PLATE BEARING ASSEMBLY (PRESTRESSED CONCRETE BEAMS) (EXPANSION)	11-03-2015	B311

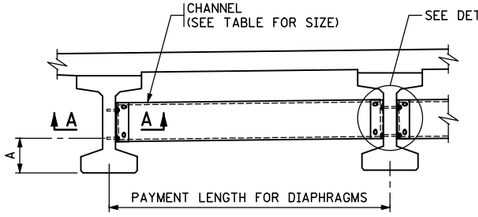

PART TRANSVERSE SECTION AT DIAPHRAGM

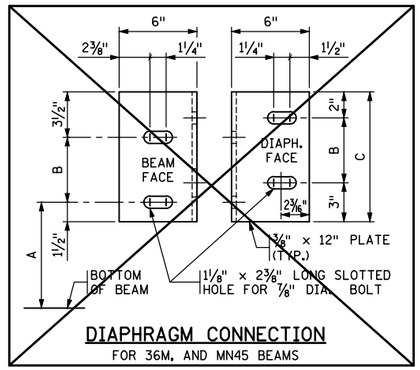

DIAPHRAGM CONNECTION
FOR 36M, AND MN45 BEAMS

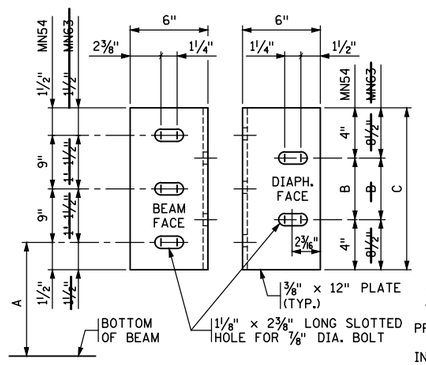

DIAPHRAGM CONNECTION
FOR MN54 ~~AND MN63~~ BEAMS

TABLE

BEAM HEIGHT	DISTANCE			CHANNEL SIZE
	A	B	C	
~~36M~~	~~1'-3"~~	~~7"~~	~~1'-0"~~	~~C12x20.7~~
~~MN45~~	~~1'-7¾"~~	~~7"~~	~~1'-0"~~	~~C12x20.7~~
MN54	1'-7¾"	1'-1"	1'-9"	MC18x42.7
~~MN63~~	~~1'-7¾"~~	~~1'-1"~~	~~2'-6"~~	~~MC18x42.7~~

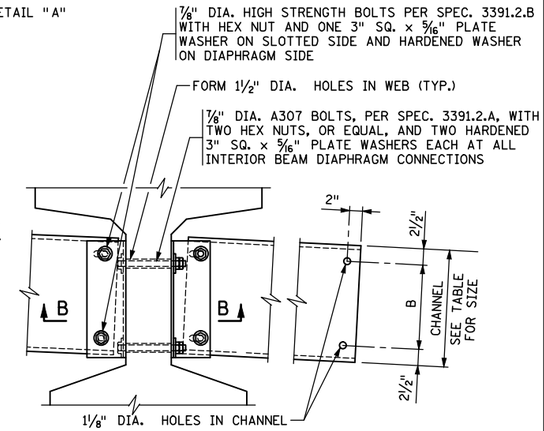

DETAIL "A"

INTERIOR BEAM WITH CONTINUOUS LINE OF DIAPHRAGMS

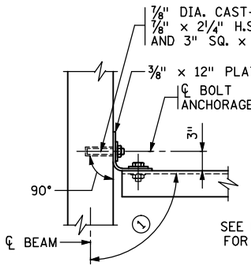

SECTION A-A

TYPICAL SECTION AT ALL FASCIA BEAMS

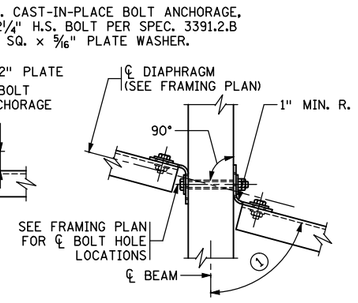

SECTION B-B

TYPICAL SECTION AT INTERIOR BEAM WITH CONTINUOUS OR STAGGERED INTERMEDIATE DIAPHRAGMS

NOTES:

PROVIDE STEEL PER SPEC. 3306.

INSTALL PER SPEC. 2405.3.K.

TORQUE ALL BOLTS, INCLUDING ANCHOR BOLTS TO 80 FT.-LBS.

SHOP BEND THE LEG OF THE 12" PLATE TO CONFORM TO THE DIAPHRAGM. A ⅜" × 6" × 6" ANGLE MAY BE USED FOR DIAPHRAGMS PERPENDICULAR TO BEAMS.

~~INCLUDE ALL STRUCTURAL STEEL SHOWN ON THIS DETAIL, INCLUDING BOLTS AND WASHERS, IN UNIT PRICE BID FOR DIAPHRAGMS FOR PRESTRESSED BEAMS.~~

BENT PLATES MAY BE USED IN PLACE OF CHANNELS IF THE BENT PLATES HAVE THE SAME HEIGHT AS THE CHANNELS THEY REPLACE, ARE 5⁄16" IN THICKNESS, AND HAVE LEGS 5" LONG.

GALVANIZE STEEL PLATES AND SHAPES PER SPEC. 3394.

GALVANIZE BOLTS, NUTS AND WASHERS PER SPEC. 3392.

① FOR SKEW ANGLES UNDER 20°, USE 90° LESS THE SKEW ANGLE. FOR SKEW ANGLES OVER 20°, USE 90°.

APPROVED: NOVEMBER 03, 2015	STATE OF MINNESOTA DEPARTMENT OF TRANSPORTATION	REVISED	DETAIL NO.
Beverly A. V. Sanahan STATE BRIDGE ENGINEER	STEEL INTERMEDIATE DIAPHRAGM (FOR 36M, MN45 - MN63 PRESTRESSED CONCRETE BEAMS)		B403

NO.	DATE	BY	CHECK	DESIGN	REVISION / SUBMITTAL

DESIGNED BY: DJW CHECKED BY: SAD
DRAWN BY: JFM CHECKED BY: DLS

AECOM Kimley»Horn

90% SUBMISSION - 01/22/16

METROPOLITAN COUNCIL

SOUTHWEST Green Line LRT Extension

CIVIL - VOLUME 4D
MINNEHAHA CREEK LRT BRIDGE
BRIDGE R0689
BRIDGE DETAILS 3

DISCIPLINE: STRUCTURES
SHEET NAME: CBRR0689-BRG-DTL-006

SHEET 37 OF 45

Dec. 14 2015 01:21 pm V:\3400_ADC\CAD\SEGMENT E2\PLAN SHEETS\STRUCTURES\MNHA-LRT\CBRR0689-BRG-DTL-006.dwg By: Joe.Menapace

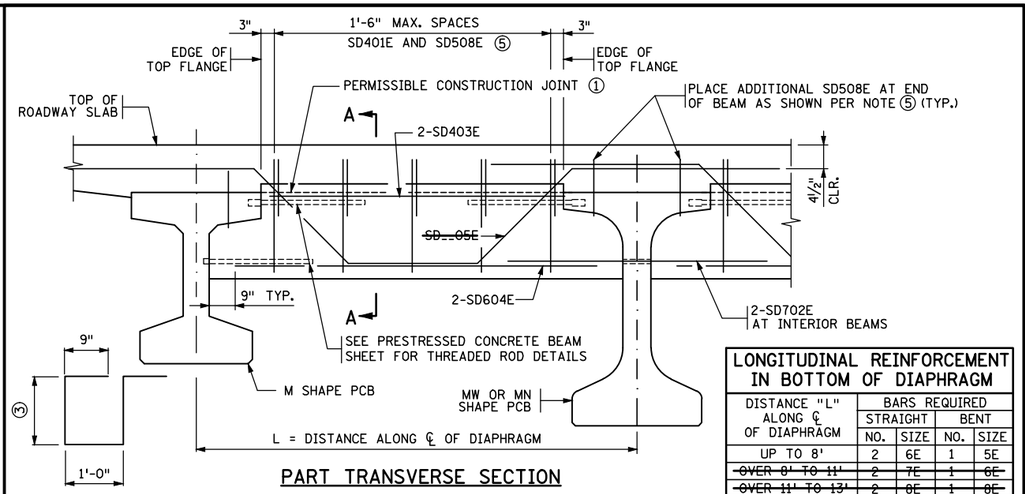

PART TRANSVERSE SECTION

(L > 8' SHOWN)

SD401E

LONGITUDINAL REINFORCEMENT IN BOTTOM OF DIAPHRAGM				
DISTANCE "L" ALONG ℄ OF DIAPHRAGM	BARS REQUIRED			
	STRAIGHT		BENT	
	NO.	SIZE	NO.	SIZE
UP TO 8'	2	6E	1	5E
~~OVER 8' TO 11'~~	~~2~~	~~7E~~	~~1~~	~~6E~~
~~OVER 11' TO 13'~~	~~2~~	~~8E~~	~~1~~	~~8E~~
~~OVER 13' TO 15'~~	~~2~~	~~9E~~	~~1~~	~~10E~~
~~OVER 15' TO 18'~~	~~2~~	~~11E~~	~~1~~	~~11E~~

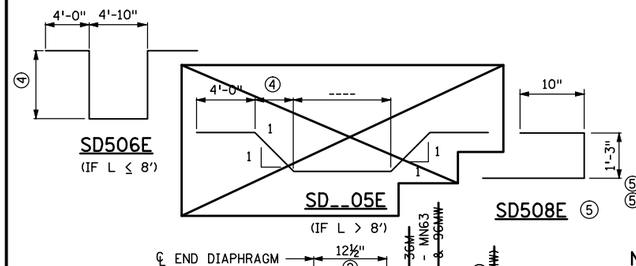

SECTION A-A

(M SHAPE PCB SHOWN)

BILL OF REINFORCEMENT FOR END DIAPHRAGM				
BAR	NO.	LENGTH	SHAPE	LOCATION
SD401E	30	7'-4"	⊏	VERTICAL TIE
SD702E	8	5'-0"	—	LONG. THRU BEAM
SD403E	12	4'-10"	—	LONG. TOP
SD604E	12	5'-11"	—	LONG. BOTTOM
~~SD..05E~~			~~⊐~~	~~LONGITUDINAL~~
SD506E	6	17'-6"	⊐	LONGITUDINAL
⑤ SD507E			—	LONGITUDINAL
⑤ SD508E			⊏	VERTICAL TIE

NOTES:

CONCRETE FOR END DIAPHRAGMS SHALL BE THE SAME MIX AS USED IN DECK.

QUANTITIES FOR END DIAPHRAGM CONCRETE AND REINFORCEMENT SHOWN ON THIS DETAIL SHALL BE LISTED IN SUPERSTRUCTURE QUANTITIES.

~~THREADED RODS ARE INCIDENTAL TO PRESTRESSED CONCRETE BEAMS.~~

① USE OF CONSTRUCTION JOINT REQUIRES CLEARANCE FOR EXPANSION DEVICE. WHEN CONSTRUCTION JOINT IS USED AT THIS LOCATION, DIAPHRAGM FALSEWORK SHALL REMAIN INPLACE UNTIL COMPLETION OF SLAB CURING PERIOD.

② PERPENDICULAR TO CENTERLINE OF DIAPHRAGM.

③ ~~1'-11" (27M), 2'-1" (36M AND MN45),~~ 2'-5" (MN54 AND ~~MN63), 3'-1" (82MW AND 96MW),~~ BASED ON 3" STOOL AND 9" DECK.

④ ~~1'-10" (27M), 2'-0" (36M AND MN45),~~ 2'-4" (MN54 ~~AND MN63), 3'-0" (82MW AND 96MW),~~ BASED ON NOTE ③ .

⑤ ADD SD507E AND SD508E ONLY IF NO. OF BARS AND LENGTHS ARE INCLUDED IN BILL OF REINFORCEMENT. SPACE SD508E AT 1'-6" MAX. FOR ENTIRE LENGTH OF DIAPHRAGM. REFER TO "PART TRANSVERSE SECTION" ABOVE.

APPROVED: SEPTEMBER 22, 2011	STATE OF MINNESOTA DEPARTMENT OF TRANSPORTATION	REVISED 04-17-2013 11-06-2013	DETAIL NO.
Nancy Daubenberger STATE BRIDGE ENGINEER	CONCRETE END DIAPHRAGM (27M & 36M, MN45 - MN63, 82MW & 96MW PRESTRESSED CONCRETE BEAMS) (PARAPET ABUTMENT)		B814

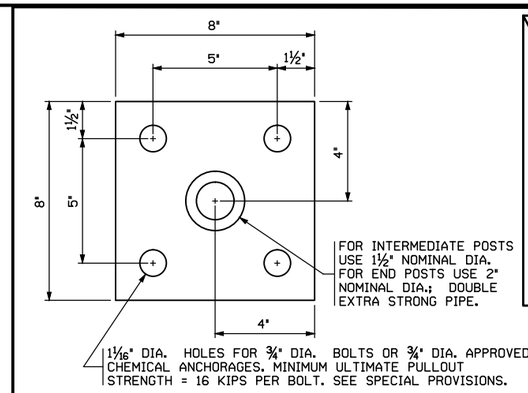

PLAN VIEW - TYPE A

ESTIMATED WEIGHT = 12 OR 14 LBS.

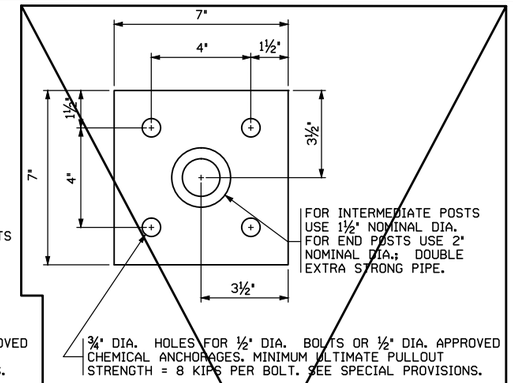

PLAN VIEW - TYPE B

ESTIMATED WEIGHT = 10 OR 12 LBS.

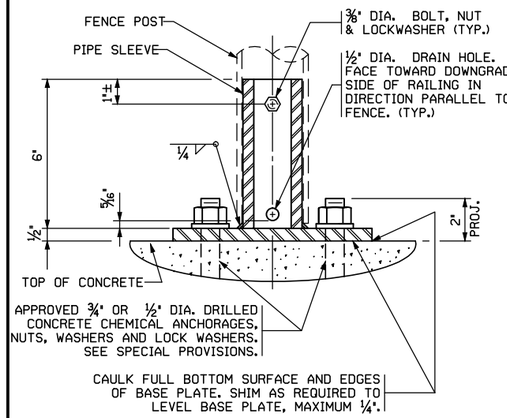

TYPICAL SECTION

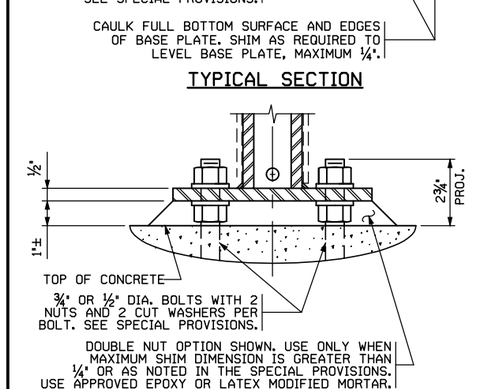

GROUT ALTERNATE

NOTES:

STRUCTURAL STEEL PER Mn/DOT SPEC. 3306

STRUCTURAL PIPE PER Mn/DOT SPEC. 3362

GALVANIZE THE FENCE POST ANCHORAGE AFTER FABRICATION PER Mn/DOT SPEC. 3394. GALVANIZE THE FASTENERS PER Mn/DOT SPEC. 3392.

DOUBLE EXTRA STRONG PIPE WEIGHTS:
1½" NOMINAL DIA. = 6.41 LBS./FT.
2" NOMINAL DIA. = 9.03 LBS./FT.

APPROVED: NOVEMBER 22, 2002	STATE OF MINNESOTA DEPARTMENT OF TRANSPORTATION	REVISION	DETAIL NO.
Daniel D Wogsyan STATE BRIDGE ENGINEER	FENCE POST ANCHORAGE		B905

NO.	DATE	BY	CHECK	DESIGN	REVISION / SUBMITTAL

DESIGNED BY: CJS CHECKED BY: DLS
DRAWN BY: KAG CHECKED BY: DLS

AECOM Kimley»Horn

90% SUBMISSION - 01/22/16

METROPOLITAN COUNCIL

SOUTHWEST Green Line LRT Extension

CIVIL - VOLUME 4D
MINNEHAHA CREEK LRT BRIDGE
BRIDGE R0689
BRIDGE DETAILS 4

DISCIPLINE: STRUCTURES
SHEET NAME: CBRR0689-BRG-DTL-007

SHEET 38 OF 45

Dec, 14 2015 01:21 pm V:\3400_ADC\CAD\SEGMENT E2\PLAN SHEETS\STRUCTURES\MNHA-LRT\CBRR0689-BRG-DTL-007.dwg By: Joe.Menapace

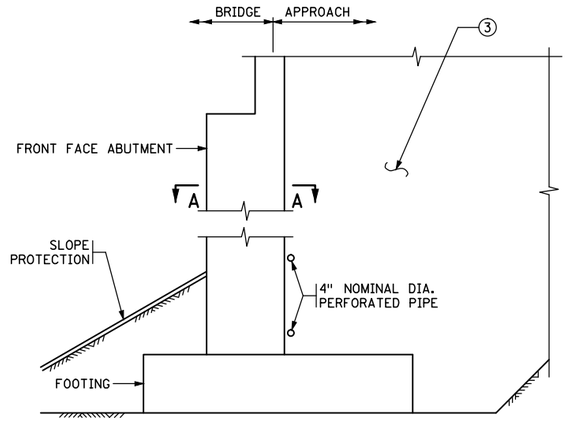

SECTION THROUGH PARAPET AND SEMI-INTEGRAL ABUTMENTS

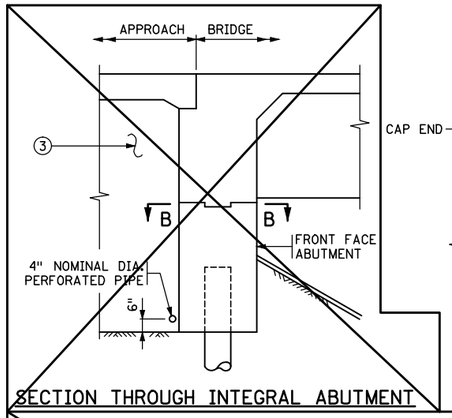

SECTION THROUGH INTEGRAL ABUTMENT

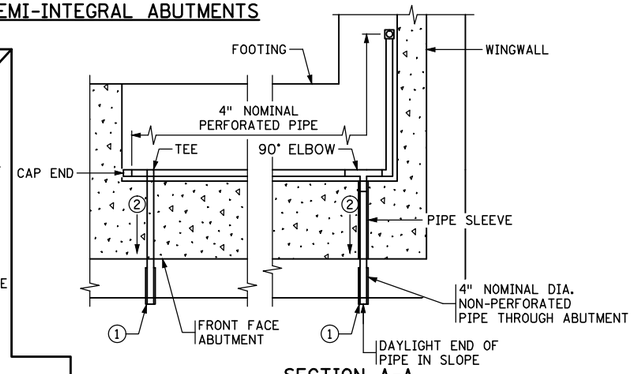

SECTION A-A

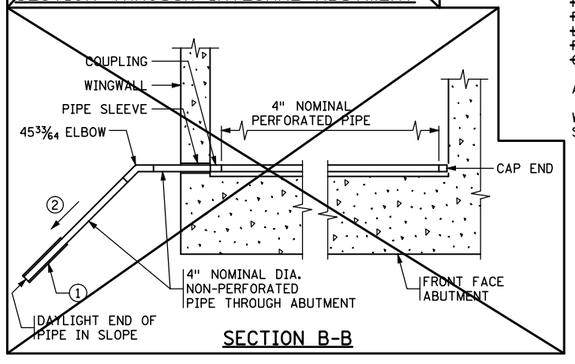

SECTION B-B

NOTES:

~~PAYMENT WILL BE INCLUDED IN THE SINGLE LUMP SUM PRICE FOR "DRAINAGE SYSTEM TYPE (B910)", INCLUDES BUT IS NOT LIMITED TO 4" DIAMETER PERFORATED AND NON-PERFORATED PIPE, ELBOWS, END CAPS, COUPLINGS, SLEEVES AND PRECAST CONCRETE HEADWALLS.~~

ALL PIPE TO COMPLY WITH SPEC. 3245.

WRAP PERFORATED PIPE WITH GEOTEXTILE PER SPEC. 3733, TYPE 1. ATTACH TO PIPE PER SPEC. 2502.

(1) AT CONTRACTORS OPTION, MAY TIE APPROACH PANEL DRAINAGE SYSTEM AND ABUTMENT DRAINAGE SYSTEM INTO A SINGLE PRECAST CONCRETE HEADWALL OR INTO A CATCH BASIN AS LONG AS A MINIMUM OF 1% POSITIVE SLOPE CAN BE MANTAINED.

USE PRECAST CONCRETE HEADWALL WITH RODENT SCREEN. SEE STANDARD PLATE 3131 FOR DETAILS.

(2) ⅛" PER FT. MINIMUM SLOPE.

(3) REFER TO GRADING PLANS FOR ABUTMENT BACKFILL REQUIREMENTS.

APPROVED: JANUARY 13, 2015	STATE OF MINNESOTA DEPARTMENT OF TRANSPORTATION	REVISED	DETAIL NO.
Nancy Daubenberger STATE BRIDGE ENGINEER	DRAINAGE SYSTEM		B910 (MOD.)

NO.	DATE	BY	CHECK	DESIGN	REVISION / SUBMITTAL

DESIGNED BY: CJS CHECKED BY: DLS
DRAWN BY: JFM CHECKED BY: DLS

AECOM Kimley»Horn

90% SUBMISSION - 01/22/16

METROPOLITAN COUNCIL

SOUTHWEST Green Line LRT Extension

CIVIL - VOLUME 4D
MINNEHAHA CREEK LRT BRIDGE
BRIDGE R0689
BRIDGE DETAILS 5

DISCIPLINE: STRUCTURES
SHEET NAME: CBRR0689-BRG-DTL-008

SHEET 39 OF 45

Dec, 14 2015 01:22 pm v:\3400_ADC\CAD\SEGMENT E2\PLAN SHEETS\STRUCTURES\MNHA-LRT\CBRR0689-BRG-DTL-008.dwg By: Joe.Menapace

CONCRETE WEARING COURSE

☐ LOW SLUMP

☐ OTHER _____
TYPE OR MANUFACTURER

EXPANSION JOINTS

JOINT MANUFACTURER

MANUFACTURER'S IDENTIFICATION _____
MFR'S No. AND/OR LETTER DESIGNATION FOR JOINT USED

GLAND MANUFACTURER _____
NAME AND ADDRESS (CITY, STATE)

SIZE OF GLAND _____

MANUFACTURER'S IDENTIFICATION _____
MFR'S No. AND/OR LETTER DESIGNATION FOR GLAND USED

ELASTOMERIC BEARING PADS

PAD MANUFACTURER _____
NAME AND ADDRESS (CITY, STATE)

SPECIAL SURFACE FINISH

SYSTEM: _____ COLOR: _____

FINISHING ROADWAY FACES OF BARRIER RAILING

TYPE: _____ COLOR: _____

ANTI-GRAFFITI COATING

MANUFACTURER _____
NAME AND ADDRESS (CITY, STATE)

PRODUCT NAME: _____ LOCATION: _____

PAINT SYSTEM

Mn/DOT SPECIFICATION NUMBER _____
2478 OR 2479 OR OTHER

MANUFACTURER _____
NAME AND ADDRESS (CITY, STATE)

PRIME COAT _____
Mn/DOT MATERIAL SPECIFICATION NUMBER

INTERMEDIATE COAT _____
Mn/DOT MATERIAL SPECIFICATION NUMBER

FINISH COAT _____ _____
Mn/DOT MATERIAL SPECIFICATION NUMBER COLOR

PLAN QUALITY

RATE 1 (AGREE), 2 (NEUTRAL), OR 3 (DISAGREE, PLEASE COMMENT BELOW)

DIMENSIONING AND DETAILING ADEQUATELY DESCRIBED REQUIRED CONSTRUCTION. _____
BAR LISTS AND QUANTITIES WERE TYPICALLY COMPLETE AND FREE OF ERRORS. _____
SCALE OF DRAWINGS AND OVERALL LEGIBILITY OF LINES AND TEXT WAS GOOD. _____
(SB) SPECIAL PROVISIONS ADEQUATELY DESCRIBED SPECIAL WORK AND PAYMENT. _____

COMMENTS: _____

NUMBER OF BRIDGE
SUPPLEMENTAL AGREEMENTS: _____ COST: $ _____

LIST SIGNIFICANT ERRORS OR OMISSIONS IN PLAN DETAILS OR PAY QUANTITIES IN THE SPACE PROVIDED AT RIGHT.

BRIDGE REMOVAL / BRIDGE OPENING

NUMBER OF AND DATE OLD BRIDGE WAS REMOVED (IF APPLICABLE):

BRIDGE NUMBER _____ DATE REMOVED _____

DATE NEW BRIDGE WAS OPENED TO TRAFFIC _____

NOTIFY THE BRIDGE OFFICE BRIDGE MANAGEMENT UNIT WITH THIS INFORMATION AS SOON AS POSSIBLE. (651) 366-4557

OTHER ITEMS ①

① UTILITIES ADDED DURING CONSTRUCTION AND SPECIALTY ITEMS.

FINAL QUANTITIES ENTERED ON SCHEDULE OF QUANTITIES: YES ☐ NO ☐

SUMMARY OF SIGNIFICANT AS-BUILT CHANGES

THE AS-BUILT INFORMATION WAS ADDED TO THE PLAN BY:

_____ _____
INSPECTOR(S) SIGNATURE DATE

CHECKED BY: _____ _____
PROJECT ENGINEER/SUPERVISOR SIGNATURE DATE

AT THE TIME OF THE FINAL, THIS COMPLETED AS-BUILT BRIDGE DATA SHEET MUST BE SUBMITTED TO THE BRIDGE OFFICE - ATTN: REGIONAL CONSTRUCTION ENGINEER (MS610).

REVISION: 10-28-2008

APPROVED: SEPTEMBER 26, 2003
Daniel L. Dorgan
STATE BRIDGE ENGINEER

AS-BUILT DETAILS
(AS NEEDED)

FIG. 5-397.900

TITLE: AS-BUILT BRIDGE DATA	DES:	DR:	APPROVED:	BRIDGE NO. R0689
	CHK:	CHK:		
	SHEET NO. 40 OF 45 SHEETS			

CONTRACTED PROFILE

SCALE HOR: 0 50'

SCALE VER: 0 10'

PROFILE GRADE TRACK 2 (FG-EB-TRK-E2)

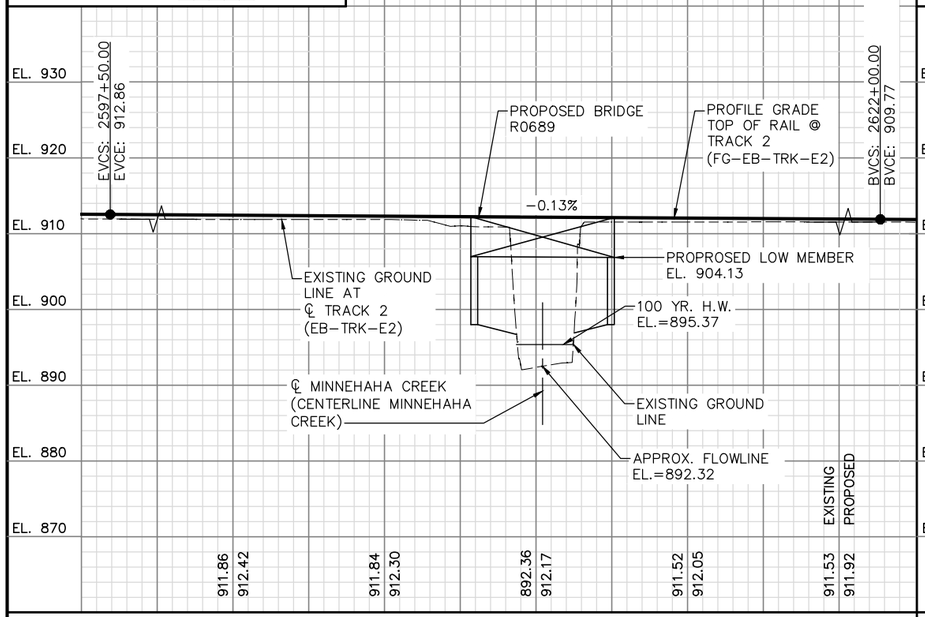

CONTRACTED PROFILE

SCALE HOR: 0 50'

SCALE VER: 0 10'

PROFILE GRADE MINNEHAHA CREEK (CENTERLINE MINNEHAHA CREEK)

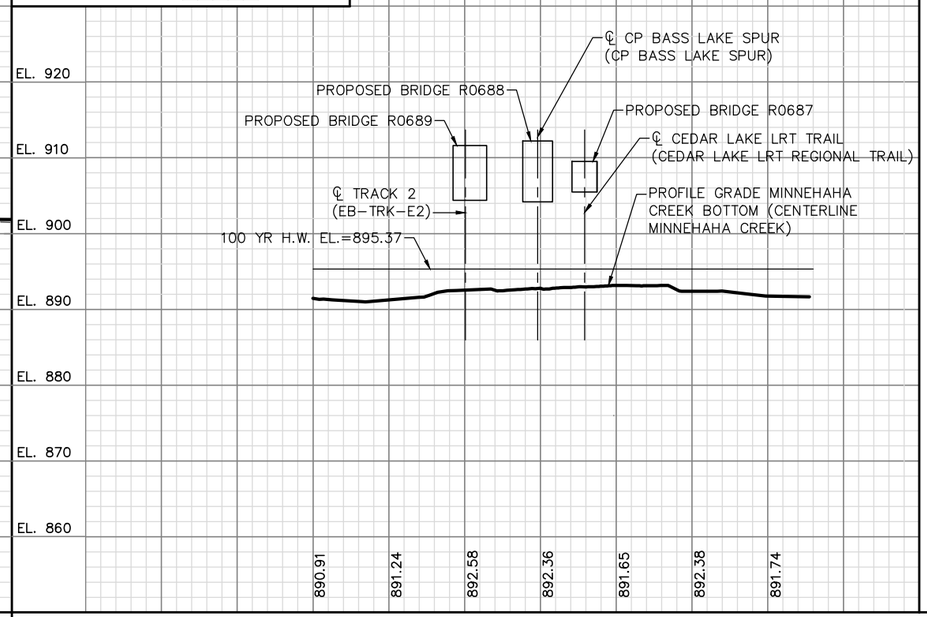

LOCATION ENGINEER'S OBSERVATIONS AT BRIDGE SITE

1. SPECIAL FEATURES: WATERFALLS, DAMS, FLOODS, ICE, DEBRIS SLIDING BANKS, RECREATIONAL BOATING.
2. OTHER BRIDGES OR CULVERTS OVER THE SAME STREAM (PARTICULARY STRUCTURES WHICH CARRY HIGH WATER WITHOUT OVERFLOW OF ROADWAY): GIVEN LOCATION, TYPE, LENGTH, HEIGHT ABOVE HIGH WATER, CROSS-SECTIONAL AREA ETC.
3. APPARENT HIGHWATER ELEVATION OBTAINED FROM:
4. OTHER DATA: APPROX. VELOCITY OF WATER AT TIME OF SURVEY.

HYDRAULIC ENGINEER'S RECOMMENDATION

DATE: DECEMBER 2015

STREAM OR DITCH DESIGNATION: MINNEHAHA CREEK

DRAINAGE AREA: 138 SQ. MI.

MAX FLOOD ON RECORD: UNKNOWN

DESIGN FLOOD (100 YR. FREQ.): 865 C.F.S.
HEADWATER ELEVATION: 895.37 FT.
DESIGN MEAN VELOCITY THROUGH STRUCTURE 8.40 F.P.S.
TOTAL STAGE INCREASE 0.0 FT.
LOW MEMBER AT OR ABOVE ELEVATION 904.13 FT.

WATERWAY AREA REQUIRED BELOW ELEV. 895.37 = 102.93 SQ. FT. AT RIGHT ANGLES TO CHANNEL

BASIC FLOOD (100 YR. FREQ.) 865 C.F.S.
HEADWATER ELEVATION: 895.37 FT.
TOTAL STAGE INCREASE FT. 0.0
MEAN VELOCITY THROUGH STRUCTURE 8.40 F.P.S.

FLOWLINE ELEVATION: 892.32 FT. SKEW ANGLE: 0 DEG.

ESTIMATED PRELIMINARY TOTAL SCOUR (500 YR. FREQ.) AT ABUTMENT EL 887.57

SCOUR CONFIRMATION RECOMMENDATION

DATE: DECEMBER 2015

TOTAL SCOUR AT ABUT. EL. 887.57 (500 YR. FREQ.)

SCOUR CODE: L

BRIDGE SURVEY SHEETS MADE FROM 2014 MFRA SURVEYS

1ST BENCH MARK (NAVD88)
ELEVATION: 913.20
NORTHING: 150917.04
EASTING: 501306.42
DESCRIPTION: MAG NAIL IN BIT.

2ND BENCH MARK (NAVD88)
ELEVATION: 912.78
NORTHING; 150966.60
EASTING: 501408.21
DESCRIPTION: MAG NAIL IN BIT.

PLAT

SCALE: 0 50'

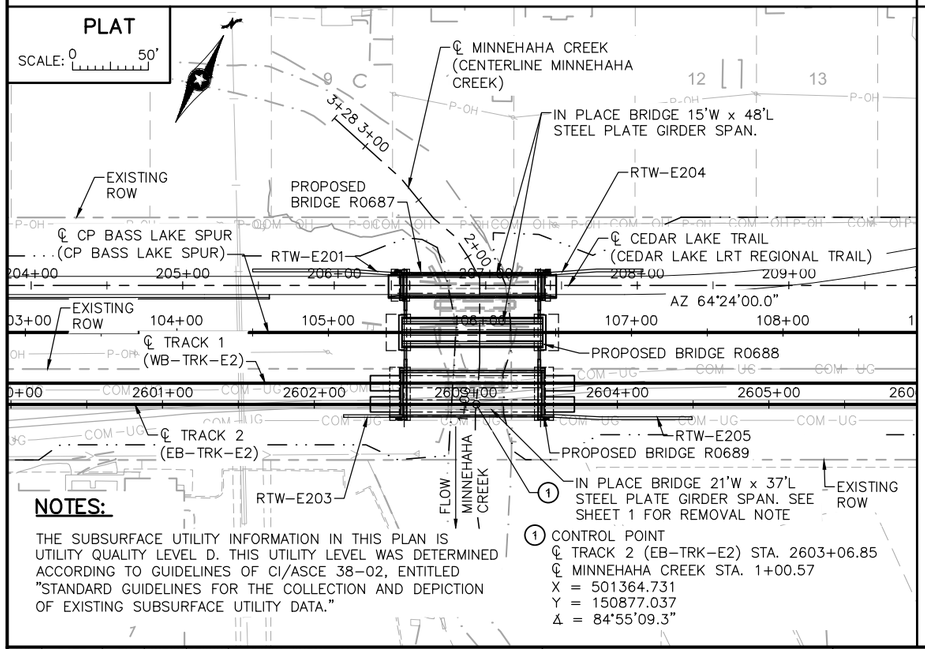

NOTES:

THE SUBSURFACE UTILITY INFORMATION IN THIS PLAN IS UTILITY QUALITY LEVEL D. THIS UTILITY LEVEL WAS DETERMINED ACCORDING TO GUIDELINES OF CI/ASCE 38-02, ENTITLED "STANDARD GUIDELINES FOR THE COLLECTION AND DEPICTION OF EXISTING SUBSURFACE UTILITY DATA."

① CONTROL POINT
℄ TRACK 2 (EB-TRK-E2) STA. 2603+06.85
℄ MINNEHAHA CREEK STA. 1+00.57
X = 501364.731
Y = 150877.037
Δ = 84°55'09.3"

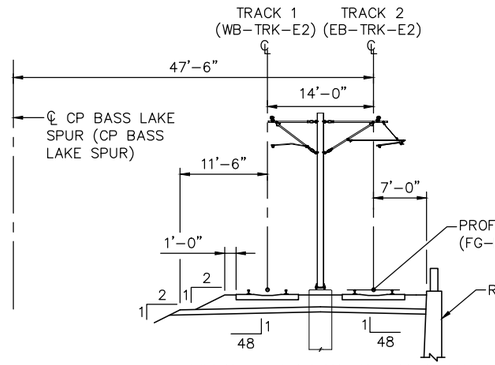

TYPICAL APPROACH SECTION
LRT AT MINNEHAHA CREEK

INDEX MAP

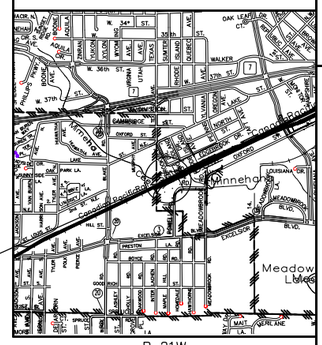

BRIDGE SURVEY

SOUTHWEST LRT OVER MINNEHAHA CREEK
1.7 MI. S.W. OF JCT. OF T.H. 7 AND T.H. 100
IN ST. LOUIS PARK

SEC 20 T 117N R 21W

CITY OF ST. LOUIS PARK HENNEPIN COUNTY

BRIDGE R0689

NO.	DATE	BY	CHECK	DESIGN	REVISION / SUBMITTAL

DESIGNED BY: CJS CHECKED BY: DLS
DRAWN BY: KAG CHECKED BY: DLS

AECOM Kimley»Horn

90% SUBMISSION - 01/22/16

METROPOLITAN COUNCIL

SOUTHWEST Green Line LRT Extension

CIVIL - VOLUME 4D
MINNEHAHA CREEK LRT BRIDGE
BRIDGE R0689
BRIDGE SURVEY

DISCIPLINE: STRUCTURES

SHEET NAME: CBRR0689-BRG-SUR-001

SHEET 41 OF 45

Dec, 14 2015 01:28 pm V:\3400_ADC\CAD\SEGMENT E2\PLAN SHEETS\STRUCTURES\MNHA-LRT\CBRR0689-BRG-SUR-001.dwg By: Joe.Menapace

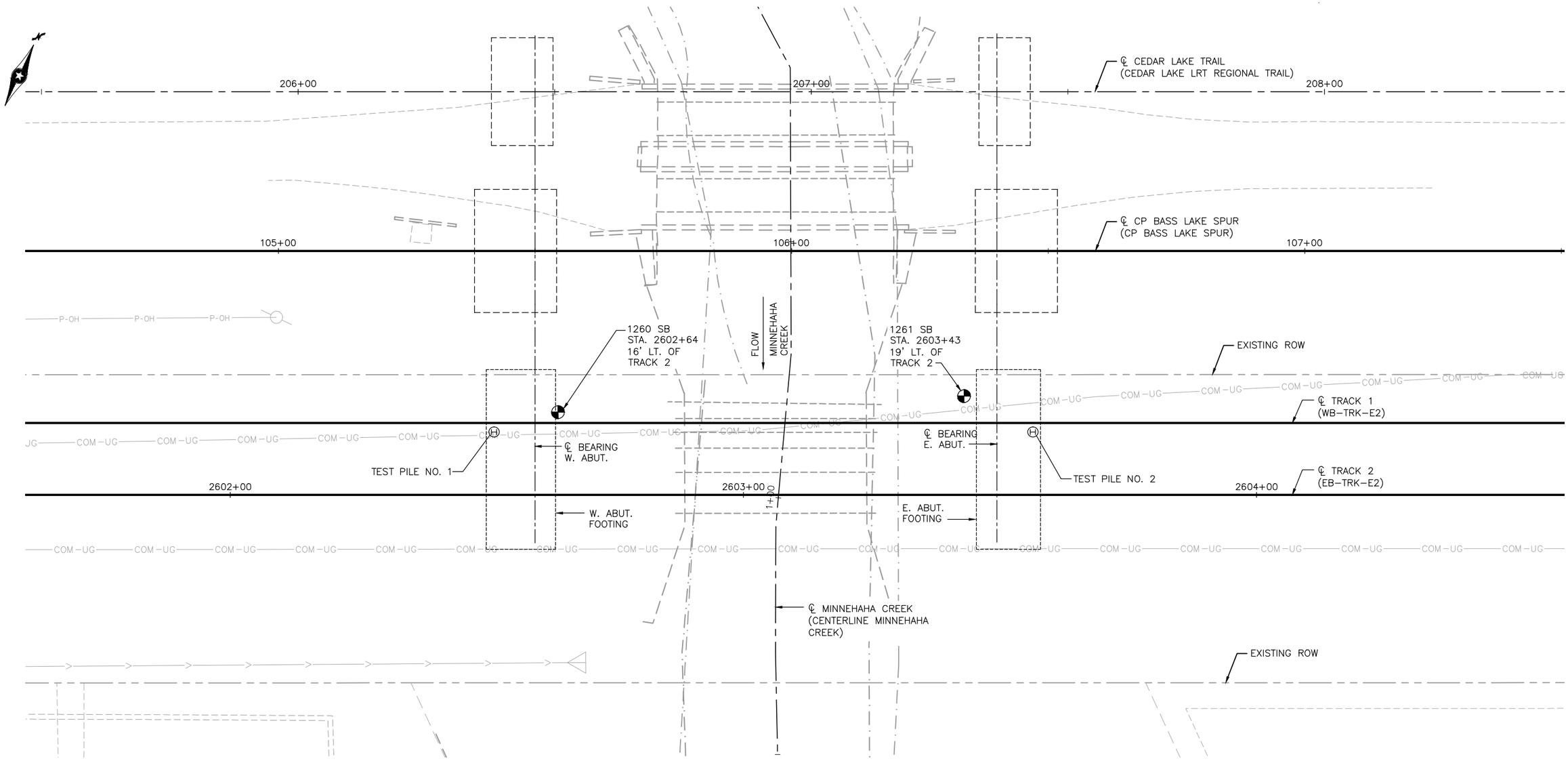

NOTES:

THE SUBSURFACE UTILITY INFORMATION IN THIS PLAN IS UTILITY QUALITY LEVEL D. THIS UTILITY QUALITY LEVEL WAS DETERMINED ACCORDING TO GUIDELINES OF CI/ASCE 38–02, ENTITLED "STANDARD GUIDELINES FOR THE COLLECTION AND DEPICTION OF EXISTING SUBSURFACE UTILITY DATA."

NO.	DATE	BY	CHECK	DESIGN	REVISION / SUBMITTAL

DESIGNED BY: CJS | CHECKED BY: DLS
DRAWN BY: KAG | CHECKED BY: DLS

AECOM Kimley»Horn

90% SUBMISSION - 01/22/16

METROPOLITAN COUNCIL

SOUTHWEST Green Line LRT Extension

CIVIL - VOLUME 4D
MINNEHAHA CREEK LRT BRIDGE
BRIDGE R0689
BRIDGE SURVEY PLAN

DISCIPLINE: STRUCTURES
SHEET NAME: CBRR0689-BRG-BOR-001

SHEET 42 OF 45

Dec, 14 2015 01:31 pm V:\3400_ADC\CAD\SEGMENT E2\PLAN SHEETS\STRUCTURES\MNHA-LRT\CBRR0689-BRG-BOR-001.dwg By: Joe.Menapace

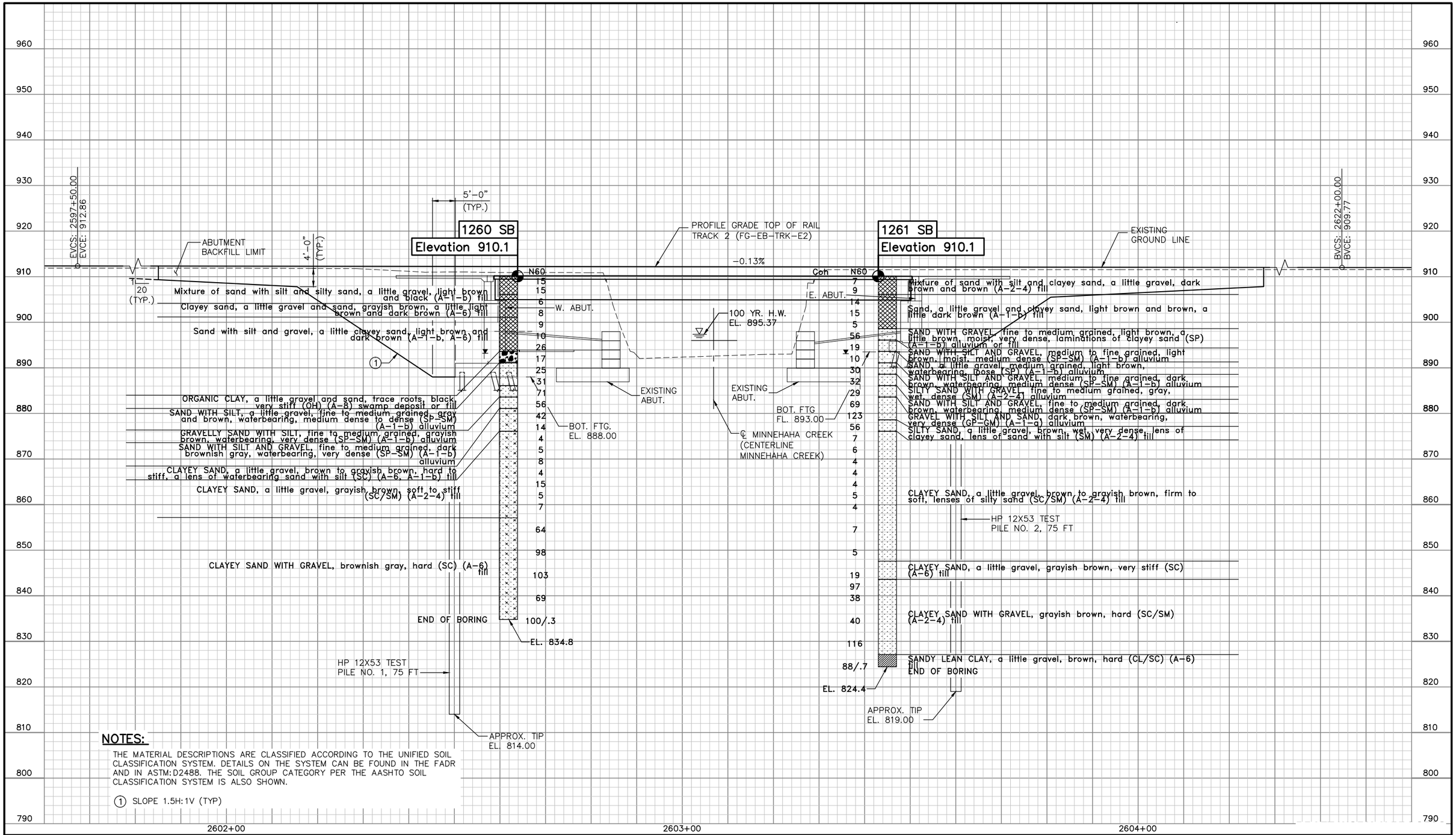

NOTES:

THE MATERIAL DESCRIPTIONS ARE CLASSIFIED ACCORDING TO THE UNIFIED SOIL CLASSIFICATION SYSTEM. DETAILS ON THE SYSTEM CAN BE FOUND IN THE FADR AND IN ASTM:D2488. THE SOIL GROUP CATEGORY PER THE AASHTO SOIL CLASSIFICATION SYSTEM IS ALSO SHOWN.

(1) SLOPE 1.5H:1V (TYP)

NO.	DATE	BY	CHECK	DESIGN	REVISION / SUBMITTAL

DESIGNED BY: CJS | CHECKED BY: DLS
DRAWN BY: KAG | CHECKED BY: DLS

AECOM Kimley»Horn

90% SUBMISSION - 01/22/16

METROPOLITAN COUNCIL

SOUTHWEST Green Line LRT Extension

CIVIL - VOLUME 4D
MINNEHAHA CREEK LRT BRIDGE
BRIDGE R0689
BRIDGE SURVEY PROFILE

DISCIPLINE: STRUCTURES

SHEET NAME: CBRR0689-BRG-BOR-002

SHEET 43 OF 45

Dec, 14 2015 01:32 pm V:\3400_ADC\CAD\SEGMENT E2\PLAN SHEETS\STRUCTURES\MNHA-LRT\CBRR0689-BRG-BOR-002.dwg By: Joe.Menapace

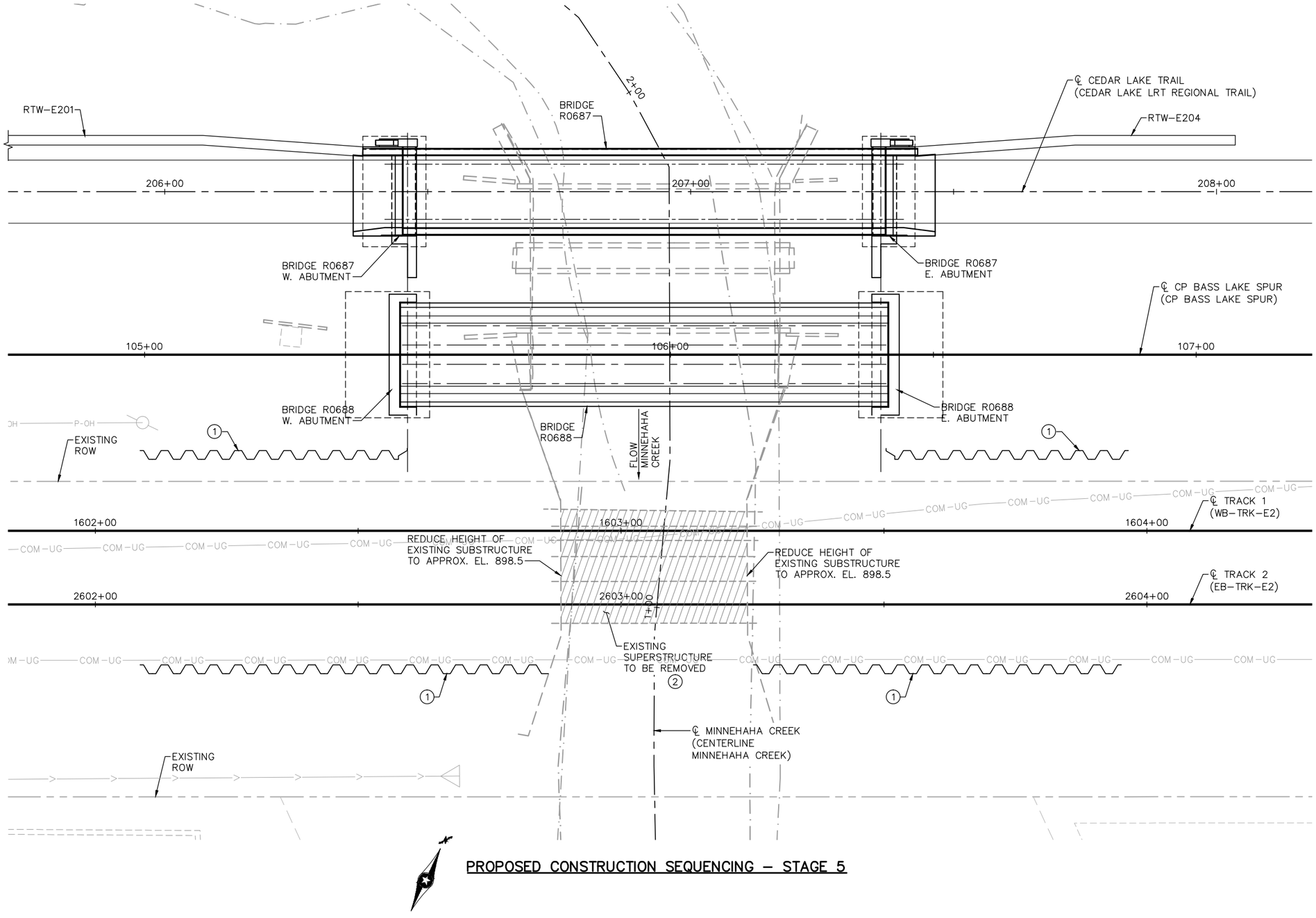

PROPOSED CONSTRUCTION SEQUENCING – STAGE 5

STAGING NOTES

STAGES 5 AND 6 SHOWN IN THIS PLAN, SEE BRIDGES R0687 AND R0688 FOR STAGES 1–4.

REMOVE AND INSTALL SOE AS NECESSARY TO CONSTRUCT PROPOSED LRT BRIDGE R0689 AND RETAINING WALLS E203 AND E205.

REMOVE EXISTING FREIGHT SUPERSTRUCTURE AT LOCATION OF LRT BRIDGE R0689. EXCAVATE FOR CONSTRUCTION OF LRT BRIDGE R0689. EXISTING SUBSTRUCTURES TO REMAIN IN PLACE. REDUCE HEIGHT OF EXISTING SUBSTRUCTURES TO APPROXIMATE ELEVATION 898.5 AS APPROVED BY ENGINEER IN FIELD.

(1) SOE

(2) EXISTING FREIGHT RAIL BRIDGE IS SINGLE SPAN, 37' LONG X 21' WIDE STEEL DECK PLATE GIRDER BRIDGE. BRIDGE NUMBER NOT AVAILABLE.

STAGING REQUIREMENTS

ALL TRACKS SHALL BE KEPT OPEN FOR TRAIN USE DURING CONSTRUCTION EXCEPT WITH PRIOR APPROVAL. CP SHALL HAVE FINAL AUTHORITY ON PERMITTED TRACK CLOSURES.

CEDAR LAKE TRAIL SHALL BE KEPT OPEN FOR PUBLIC USE DURING CONSTRUCTION EXCEPT WITH PRIOR APPROVAL.

SEE UTILITY PLANS FOR UTILITIES TO BE RELOCATED PRIOR TO BRIDGE CONSTRUCTION.

NO.	DATE	BY	CHECK	DESIGN	REVISION / SUBMITTAL

DESIGNED BY: BAW CHECKED BY: DLS
DRAWN BY: RHK CHECKED BY: DLS

AECOM Kimley»Horn

90% SUBMISSION - 01/22/16

METROPOLITAN COUNCIL

SOUTHWEST Green Line LRT Extension

CIVIL - VOLUME 4D
MINNEHAHA CREEK LRT BRIDGE
BRIDGE R0689
STAGING PLAN 1

DISCIPLINE: STRUCTURES
SHEET NAME: CBRR0689-BRG-STG-001

SHEET 44 OF 45

Dec, 14 2015 01:35 pm V:\3400_ADC\CAD\SEGMENT E2\PLAN SHEETS\STRUCTURES\MNHA-LRT\CBRR0689-BRG-STG-001.dwg By: Joe.Menapace

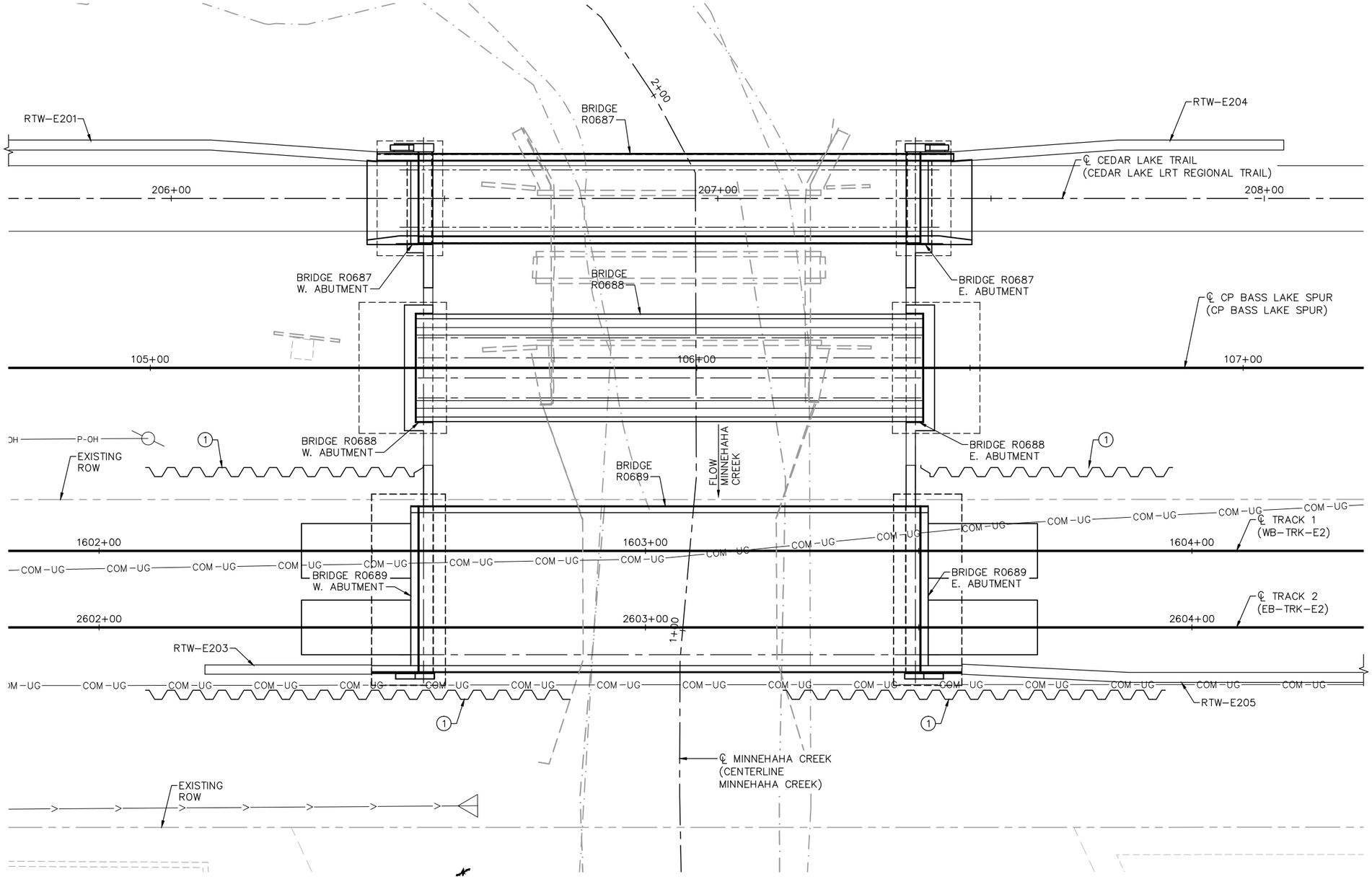

PROPOSED CONSTRUCTION SEQUENCING – STAGE 6

STAGING NOTES

STAGES 5 AND 6 SHOWN IN THIS PLAN, SEE BRIDGES R0687 AND R0688 FOR STAGES 1–4.

CONSTRUCT LRT BRIDGE R0689 AND THE RETAINING WALLS E203 AND E205. BACKFILL STRUCTURES.

REMOVE ALL SOE.

(1) SOE

STAGING REQUIREMENTS

ALL TRACKS SHALL BE KEPT OPEN FOR TRAIN USE DURING CONSTRUCTION EXCEPT WITH PRIOR APPROVAL. CP SHALL HAVE FINAL AUTHORITY ON PERMITTED TRACK CLOSURES.

CEDAR LAKE TRAIL SHALL BE KEPT OPEN FOR PUBLIC USE DURING CONSTRUCTION EXCEPT WITH PRIOR APPROVAL.

SEE UTILITY PLANS FOR UTILITIES TO BE RELOCATED PRIOR TO BRIDGE CONSTRUCTION.

NO.	DATE	BY	CHECK	DESIGN	REVISION / SUBMITTAL

DESIGNED BY: BAW | CHECKED BY: DLS
DRAWN BY: RHK | CHECKED BY: DLS

AECOM Kimley»Horn

90% SUBMISSION - 01/22/16

METROPOLITAN COUNCIL

SOUTHWEST Green Line LRT Extension

CIVIL - VOLUME 4D
MINNEHAHA CREEK LRT BRIDGE
BRIDGE R0689
STAGING PLAN 2

DISCIPLINE: STRUCTURES
SHEET NAME: CBRR0689-BRG-STG-002

SHEET 45 OF 45

Dec, 14 2015 01:38 pm V:\3400_ADC\CAD\SEGMENT E2\PLAN SHEETS\STRUCTURES\MNHA-LRT\CBRR0689-BRG-STG-002.dwg By: Joe.Menapace