METROPOLITAN COUNCIL

SOUTHWEST
Green Line LRT Extension

CIVIL CONSTRUCTION

VOLUME 3B
TRACKWORK

90% SUBMISSION
DATE : 01/22/16

PLAN PACKAGE INDEX / DESCRIPTION	
CIVIL CONSTRUCTION	BID ALTERNATES
VOLUME 1 - EXISTING CONDITIONS & REMOVALS	VOLUME A - NOT USED
VOLUME 2A - CIVIL	VOLUME B - NOT USED
VOLUME 2B - CIVIL	VOLUME C - BID ALTERNATE 3 (LRCI 5) ▲
VOLUME 3A - TRACKWORK	VOLUME D - BID ALTERNATE 4 (LRCI 6) ▲
VOLUME 3B - TRACKWORK	VOLUME E - BID ALTERNATE 5 (LRCI 7) ▲
VOLUME 3C - TRACKWORK DETAILS	VOLUME F - BID ALTERNATE 6 (LRCI 8) ▲
VOLUME 4A - BRIDGES	VOLUME G - BID ALTERNATE 7 (LRCI 4) ▲
VOLUME 4B - BRIDGES	VOLUME H - BID ALTERNATE 8 (LRCI 10) ▲
VOLUME 4C - BRIDGES	VOLUME I - BID ALTERNATE 9 (LRCI 11) ▲
VOLUME 4D - BRIDGES	VOLUME J - BID ALTERNATE 10 (LRCI 12)
VOLUME 4E - BRIDGES	VOLUME K - BID ALTERNATE 11 (LRCI 13)
VOLUME 4F - BRIDGES	VOLUME L - BID ALTERNATE 12 (LRCI 14)
VOLUME 4G - BRIDGES	VOLUME M - BID ALTERNATE 13 (LRCI 26)
VOLUME 5 - TUNNELS	VOLUME N - BID ALTERNATE 14 (LRCI 27)
VOLUME 6 - RETAINING WALLS	VOLUME O - BID ALTERNATE 15 (LRCI 17)
VOLUME 7 - UTILITIES	VOLUME P - BID ALTERNATE 20 (LRCI 32)
VOLUME 8 - DRAINAGE	VOLUME Q - BID ALTERNATE 21 (LRCI 33)
VOLUME 9 - URBAN DESIGN / LANDSCAPE	
VOLUME 10A - TRAFFIC	
VOLUME 10B - LIGHTING *	
VOLUME 11A - STATIONS ▲	
VOLUME 11B - STATIONS	
VOLUME 11C - STATIONS	
VOLUME 11D - STATIONS	
VOLUME 11E - STATIONS	
VOLUME 12 - SYSTEMS	

* TO BE SUBMITTED AT A LATER DATE
▲ SUBMITTED AT 75%, NOT INCLUDED IN 90%

THE PROPOSED SOUTHWEST LRT PROJECT IS NOT FINAL BUT IS STILL UNDER ENVIRONMENTAL REVIEW AND THE PROJECT IS SUBJECT TO CHANGE. THESE PLANS ARE NOT FINAL.

THE COUNCIL, THROUGH THE DEVELOPMENT OF THESE PLANS, DOES NOT INTEND THAT THEY WILL PREJUDICE OR COMPROMISE ANY STATE OR FEDERAL ENVIRONMENTAL REVIEW OR OTHER LEGAL REQUIREMENTS. THESE PLANS DO NOT LIMIT THE PROJECT DESIGN ALTERNATIVES OR MITIGATIVE MEASURES THAT THE COUNCIL MAY UNDERTAKE IF THE PROPOSED SWLRT PROJECT PROCEEDS TO CONSTRUCTION.

THE COUNCIL WILL NOT TAKE FINAL ACTION ON THIS MATTER UNLESS THE COUNCIL PROCEEDS WITH THE PROJECT AFTER THE FTA'S RECORD OF DECISION AND THE COUNCIL'S DETERMINATION OF ADEQUACY.

WARNING: THIS RECORD MAY CONTAIN SENSITIVE SECURITY INFORMATION THAT IS CONTROLLED UNDER 49 CFR PARTS 15 AND 1520. NO PART OF THIS RECORD MAY BE DISCLOSED TO PERSONS WITHOUT A "NEED TO KNOW", AS DEFINED IN 49 CFR PARTS 15 AND 1520, EXCEPT WITH THE WRITTEN PERMISSION OF THE ADMINISTRATOR OF THE TRANSPORTATION SECURITY ADMINISTRATION OR THE SECRETARY OF TRANSPORTATION. UNAUTHORIZED RELEASE MAY RESULT IN CIVIL PENALTY OR OTHER ACTION. FOR U.S. GOVERNMENT AGENCIES, PUBLIC DISCLOSURE IS GOVERNED BY 5 U.S.C. 552 AND 49 CFR PARTS 15 AND 1520.

AECOM

CIVIL CONSTRUCTION

SHT #	SHEET NAME	SHEET DESCRIPTION	STATION	STATION	REV
		VOLUME 3B - TRACKWORK			
1	00-GEN-CVR-001	COVER SHEET			
2	00-GEN-IDX-001	VOLUME INDEX OF PLAN SHEETS SHEET 1			
3	00-GEN-IDX-002	VOLUME INDEX OF PLAN SHEETS SHEET 2			
4	W0-GEN-KEY-001	GENERAL KEY MAP SHEET 1			
5	E0-GEN-KEY-002	GENERAL KEY MAP SHEET 2			
6	00-GEN-NTS-001	GENERAL NOTES, ABBREVIATIONS, AND SYMBOLS SHEET 1			
7	00-GEN-NTS-002	GENERAL NOTES, ABBREVIATIONS, AND SYMBOLS SHEET 2			
8	E0-TRK-NTS-001	TRACK TRACK NOTES SHEET 1			
9	E0-TRK-NTS-002	TRACK SOIL CORRECTION TABLE SHEET 1			
10	E0-TRK-NTS-003	TRACK SOIL CORRECTION TABLE SHEET 2			
11	E0-TRK-NTS-004	TRACK SOIL CORRECTION TABLE SHEET 3			
12	E0-TRK-NTS-005	TRACK SOIL CORRECTION TABLE SHEET 4			
13	E1-TRK-ALG-001	TRACK ALIGNMENT DATA SHEET 1			
14	E1-TRK-ALG-002	TRACK ALIGNMENT DATA SHEET 2			
15	E2-TRK-ALG-001	TRACK ALIGNMENT DATA SHEET 3			
16	E2-TRK-ALG-002	TRACK ALIGNMENT DATA SHEET 4			
17	E3-TRK-ALG-001	TRACK ALIGNMENT DATA SHEET 5			
18	E3-TRK-ALG-002	TRACK ALIGNMENT DATA SHEET 6			
19	E4-TRK-ALG-001	TRACK ALIGNMENT DATA SHEET 7			
20	E4-TRK-ALG-002	TRACK ALIGNMENT DATA SHEET 8			
21	E4-TRK-ALG-003	TRACK ALIGNMENT DATA SHEET 9			
22	E4-TRK-ALG-004	TRACK ALIGNMENT DATA SHEET 10			
23	E1-TRK-CHT-001	TRACK TRACK CHART SHEET 1			
24	E1-TRK-CHT-002	TRACK TRACK CHART SHEET 2			
25	E1-TRK-CHT-003	TRACK TRACK CHART SHEET 3			
26	E1-TRK-CHT-004	TRACK TRACK CHART SHEET 4			
27	E1-TRK-CHT-005	TRACK TRACK CHART SHEET 5			
28	E2-TRK-CHT-001	TRACK TRACK CHART SHEET 6			
29	E2-TRK-CHT-002	TRACK TRACK CHART SHEET 7			
30	E2-TRK-CHT-003	TRACK TRACK CHART SHEET 8			
31	E2-TRK-CHT-004	TRACK TRACK CHART SHEET 9			
32	E2-TRK-CHT-005	TRACK TRACK CHART SHEET 10			
33	E3-TRK-CHT-001	TRACK TRACK CHART SHEET 11			
34	E3-TRK-CHT-002	TRACK TRACK CHART SHEET 12			
35	E3-TRK-CHT-003	TRACK TRACK CHART SHEET 13			
36	E3-TRK-CHT-004	TRACK TRACK CHART SHEET 14			
37	E3-TRK-CHT-005	TRACK TRACK CHART SHEET 15			
38	E4-TRK-CHT-001	TRACK TRACK CHART SHEET 16			
39	E4-TRK-CHT-002	TRACK TRACK CHART SHEET 17			
40	E4-TRK-CHT-003	TRACK TRACK CHART SHEET 18			
41	E4-TRK-CHT-004	TRACK TRACK CHART SHEET 19			
42	E4-TRK-CHT-005	TRACK TRACK CHART SHEET 20			
43	E4-TRK-CHT-006	TRACK TRACK CHART SHEET 21			
44	E1-TRK-TYP-001	TRACK TYPICAL SECTIONS			
45	E1-TRK-TYP-002	TRACK TYPICAL SECTIONS			
46	E1-TRK-TYP-003	TRACK TYPICAL SECTIONS			
47	E1-TRK-TYP-004	TRACK TYPICAL SECTIONS			
48	E1-TRK-TYP-005	TRACK TYPICAL SECTIONS			
49	E1-TRK-TYP-006	TRACK TYPICAL SECTIONS			
50	E1-TRK-TYP-007	TRACK TYPICAL SECTIONS			
51	E1-TRK-TYP-008	TRACK TYPICAL SECTIONS			
52	E1-TRK-TYP-009	TRACK TYPICAL SECTIONS			
53	E1-TRK-TYP-010	TRACK TYPICAL SECTIONS			
54	E1-TRK-TYP-011	TRACK TYPICAL SECTIONS			
55	E1-TRK-TYP-012	TRACK TYPICAL SECTIONS			
56	E1-TRK-TYP-013	TRACK TYPICAL SECTIONS			
57	E1-TRK-TYP-014	TRACK TYPICAL SECTIONS			
58	E1-TRK-TYP-015	TRACK TYPICAL SECTIONS			
59	E1-TRK-TYP-016	TRACK TYPICAL SECTIONS			
60	E1-TRK-TYP-017	TRACK TYPICAL SECTIONS			
61	E1-TRK-TYP-018	TRACK TYPICAL SECTIONS			
62	E1-TRK-TYP-019	TRACK TYPICAL SECTIONS			
63	E1-TRK-TYP-020	TRACK TYPICAL SECTIONS			
64	E1-TRK-TYP-021	TRACK TYPICAL SECTIONS			
65	E1-TRK-TYP-022	TRACK TYPICAL SECTIONS			
66	E1-TRK-TYP-023	TRACK TYPICAL SECTIONS			
67	E1-TRK-TYP-024	TRACK TYPICAL SECTIONS			
68	E1-TRK-TYP-025	TRACK TYPICAL SECTIONS			
69	E1-TRK-TYP-026	TRACK TYPICAL SECTIONS			
70	E1-TRK-TYP-027	TRACK TYPICAL SECTIONS			

CIVIL CONSTRUCTION

SHT #	SHEET NAME	SHEET DESCRIPTION	STATION	STATION	REV
71	E1-TRK-TYP-028	TRACK TYPICAL SECTIONS			
72	E1-TRK-TYP-029	TRACK TYPICAL SECTIONS			
73	E2-TRK-TYP-001	TRACK TYPICAL SECTIONS			
74	E2-TRK-TYP-002	TRACK TYPICAL SECTIONS			
75	E2-TRK-TYP-003	TRACK TYPICAL SECTIONS			
76	E2-TRK-TYP-004	TRACK TYPICAL SECTIONS			
77	E2-TRK-TYP-005	TRACK TYPICAL SECTIONS			
78	E2-TRK-TYP-006	TRACK TYPICAL SECTIONS			
79	E2-TRK-TYP-007	TRACK TYPICAL SECTIONS			
80	E2-TRK-TYP-008	TRACK TYPICAL SECTIONS			
81	E2-TRK-TYP-009	TRACK TYPICAL SECTIONS			
82	E2-TRK-TYP-010	TRACK TYPICAL SECTIONS			
83	E2-TRK-TYP-011	TRACK TYPICAL SECTIONS			
84	E2-TRK-TYP-012	TRACK TYPICAL SECTIONS			
85	E2-TRK-TYP-013	TRACK TYPICAL SECTIONS			
86	E2-TRK-TYP-014	TRACK TYPICAL SECTIONS			
87	E2-TRK-TYP-015	TRACK TYPICAL SECTIONS			
88	E2-TRK-TYP-016	TRACK TYPICAL SECTIONS			
89	E2-TRK-TYP-017	TRACK TYPICAL SECTIONS			
90	E2-TRK-TYP-018	TRACK TYPICAL SECTIONS			
91	E2-TRK-TYP-019	TRACK TYPICAL SECTIONS			
92	E2-TRK-TYP-020	TRACK TYPICAL SECTIONS			
93	E2-TRK-TYP-021	TRACK TYPICAL SECTIONS			
94	E2-TRK-TYP-022	TRACK TYPICAL SECTIONS			
95	E2-TRK-TYP-023	TRACK TYPICAL SECTIONS			
96	E2-TRK-TYP-024	TRACK TYPICAL SECTIONS			
97	E2-TRK-TYP-025	TRACK TYPICAL SECTIONS			
98	E2-TRK-TYP-026	TRACK TYPICAL SECTIONS			
99	E2-TRK-TYP-027	TRACK TYPICAL SECTIONS			
100	E2-TRK-TYP-028	TRACK TYPICAL SECTIONS			
101	E2-TRK-TYP-029	TRACK TYPICAL SECTIONS			
102	E2-TRK-TYP-030	TRACK TYPICAL SECTIONS			
103	E2-TRK-TYP-031	TRACK TYPICAL SECTIONS			
104	E2-TRK-TYP-032	TRACK TYPICAL SECTIONS			
105	E2-TRK-TYP-033	TRACK TYPICAL SECTIONS			
106	E2-TRK-TYP-034	TRACK TYPICAL SECTIONS			
107	E2-TRK-TYP-035	TRACK TYPICAL SECTIONS			
108	E2-TRK-TYP-036	TRACK TYPICAL SECTIONS			
109	E2-TRK-TYP-037	TRACK TYPICAL SECTIONS			
110	E2-TRK-TYP-038	TRACK TYPICAL SECTIONS			
111	E2-TRK-TYP-039	TRACK TYPICAL SECTIONS			
112	E2-TRK-TYP-040	TRACK TYPICAL SECTIONS			
113	E2-TRK-TYP-041	TRACK TYPICAL SECTIONS			
114	E2-TRK-TYP-042	TRACK TYPICAL SECTIONS			
115	E2-TRK-TYP-043	TRACK TYPICAL SECTIONS			
116	E2-TRK-TYP-044	TRACK TYPICAL SECTIONS			
117	E2-TRK-TYP-045	TRACK TYPICAL SECTIONS			
118	E2-TRK-TYP-046	TRACK TYPICAL SECTIONS			
119	E2-TRK-TYP-047	TRACK TYPICAL SECTIONS			
120	E2-TRK-TYP-048	TRACK TYPICAL SECTIONS			
121	E2-TRK-TYP-049	TRACK TYPICAL SECTIONS			
122	E2-TRK-TYP-050	TRACK TYPICAL SECTIONS			
123	E2-TRK-TYP-051	TRACK TYPICAL SECTIONS			
124	E2-TRK-TYP-052	TRACK TYPICAL SECTIONS			
125	E2-TRK-TYP-053	TRACK TYPICAL SECTIONS			
126	E2-TRK-TYP-054	TRACK TYPICAL SECTIONS			
127	E2-TRK-TYP-055	TRACK TYPICAL SECTIONS			
128	E2-TRK-TYP-056	TRACK TYPICAL SECTIONS			
129	E2-TRK-TYP-057	TRACK TYPICAL SECTIONS			
130	E3-TRK-TYP-001	TRACK TYPICAL SECTIONS			
131	E3-TRK-TYP-002	TRACK TYPICAL SECTIONS			
132	E3-TRK-TYP-003	TRACK TYPICAL SECTIONS			
133	E3-TRK-TYP-004	TRACK TYPICAL SECTIONS			
134	E3-TRK-TYP-005	TRACK TYPICAL SECTIONS			
135	E3-TRK-TYP-006	TRACK TYPICAL SECTIONS			
136	E3-TRK-TYP-007	TRACK TYPICAL SECTIONS			
137	E3-TRK-TYP-008	TRACK TYPICAL SECTIONS			
138	E3-TRK-TYP-009	TRACK TYPICAL SECTIONS			
139	E3-TRK-TYP-010	TRACK TYPICAL SECTIONS			
140	E3-TRK-TYP-011	TRACK TYPICAL SECTIONS			
141	E3-TRK-TYP-012	TRACK TYPICAL SECTIONS			
142	E3-TRK-TYP-013	TRACK TYPICAL SECTIONS			
143	E3-TRK-TYP-014	TRACK TYPICAL SECTIONS			

CIVIL CONSTRUCTION

SHT #	SHEET NAME	SHEET DESCRIPTION	STATION	STATION	REV
144	E3-TRK-TYP-015	TRACK TYPICAL SECTIONS			
145	E3-TRK-TYP-016	TRACK TYPICAL SECTIONS			
146	E3-TRK-TYP-017	TRACK TYPICAL SECTIONS			
147	E3-TRK-TYP-018	TRACK TYPICAL SECTIONS			
148	E3-TRK-TYP-019	TRACK TYPICAL SECTIONS			
149	E3-TRK-TYP-020	TRACK TYPICAL SECTIONS			
150	E3-TRK-TYP-021	TRACK TYPICAL SECTIONS			
151	E3-TRK-TYP-022	TRACK TYPICAL SECTIONS			
152	E3-TRK-TYP-023	TRACK TYPICAL SECTIONS			
153	E3-TRK-TYP-024	TRACK TYPICAL SECTIONS			
154	E3-TRK-TYP-025	TRACK TYPICAL SECTIONS			
155	E3-TRK-TYP-026	TRACK TYPICAL SECTIONS			
156	E3-TRK-TYP-027	TRACK TYPICAL SECTIONS			
157	E3-TRK-TYP-028	TRACK TYPICAL SECTIONS			
158	E3-TRK-TYP-029	TRACK TYPICAL SECTIONS			
159	E3-TRK-TYP-030	TRACK TYPICAL SECTIONS			
160	E3-TRK-TYP-031	TRACK TYPICAL SECTIONS			
161	E3-TRK-TYP-032	TRACK TYPICAL SECTIONS			
162	E3-TRK-TYP-033	TRACK TYPICAL SECTIONS			
163	E3-TRK-TYP-034	TRACK TYPICAL SECTIONS			
164	E3-TRK-TYP-035	TRACK TYPICAL SECTIONS			
165	E3-TRK-TYP-036	TRACK TYPICAL SECTIONS			
166	E3-TRK-TYP-037	TRACK TYPICAL SECTIONS			
167	E3-TRK-TYP-038	TRACK TYPICAL SECTIONS			
168	E3-TRK-TYP-039	TRACK TYPICAL SECTIONS			
169	E3-TRK-TYP-040	TRACK TYPICAL SECTIONS			
170	E3-TRK-TYP-041	TRACK TYPICAL SECTIONS			
171	E3-TRK-TYP-042	TRACK TYPICAL SECTIONS			
172	E4-TRK-TYP-001	TRACK TYPICAL SECTIONS			
173	E4-TRK-TYP-002	TRACK TYPICAL SECTIONS			
174	E4-TRK-TYP-003	TRACK TYPICAL SECTIONS			
175	E4-TRK-TYP-004	TRACK TYPICAL SECTIONS			
176	E4-TRK-TYP-005	TRACK TYPICAL SECTIONS			
177	E4-TRK-TYP-006	TRACK TYPICAL SECTIONS			
178	E4-TRK-TYP-007	TRACK TYPICAL SECTIONS			
179	E4-TRK-TYP-008	TRACK TYPICAL SECTIONS			
180	E4-TRK-TYP-009	TRACK TYPICAL SECTIONS			
181	E4-TRK-TYP-010	TRACK TYPICAL SECTIONS			
182	E4-TRK-TYP-011	TRACK TYPICAL SECTIONS			
183	E4-TRK-TYP-012	TRACK TYPICAL SECTIONS			
184	E4-TRK-TYP-013	TRACK TYPICAL SECTIONS			
185	E4-TRK-TYP-014	TRACK TYPICAL SECTIONS			
186	E4-TRK-TYP-015	TRACK TYPICAL SECTIONS			
187	E4-TRK-TYP-016	TRACK TYPICAL SECTIONS			
188	E4-TRK-TYP-017	TRACK TYPICAL SECTIONS			
189	E4-TRK-TYP-018	TRACK TYPICAL SECTIONS			
190	E4-TRK-TYP-019	TRACK TYPICAL SECTIONS			
191	E4-TRK-TYP-020	TRACK TYPICAL SECTIONS			
192	E4-TRK-TYP-021	TRACK TYPICAL SECTIONS			
193	E4-TRK-TYP-022	TRACK TYPICAL SECTIONS			
194	E4-TRK-TYP-023	TRACK TYPICAL SECTIONS			
195	E4-TRK-TYP-024	TRACK TYPICAL SECTIONS			
196	E4-TRK-TYP-025	TRACK TYPICAL SECTIONS			
197	E4-TRK-TYP-026	TRACK TYPICAL SECTIONS			
198	E4-TRK-TYP-027	TRACK TYPICAL SECTIONS			
199	E4-TRK-TYP-028	TRACK TYPICAL SECTIONS			
200	E4-TRK-TYP-029	TRACK TYPICAL SECTIONS			
201	E4-TRK-TYP-030	TRACK TYPICAL SECTIONS			
202	E4-TRK-TYP-031	TRACK TYPICAL SECTIONS			
203	E4-TRK-TYP-032	TRACK TYPICAL SECTIONS			
204	E4-TRK-TYP-033	TRACK TYPICAL SECTIONS			
205	E4-TRK-TYP-034	TRACK TYPICAL SECTIONS			
206	E4-TRK-TYP-035	TRACK TYPICAL SECTIONS			
207	E4-TRK-TYP-036	TRACK TYPICAL SECTIONS			
208	E4-TRK-TYP-037	TRACK TYPICAL SECTIONS			
209	E4-TRK-TYP-038	TRACK TYPICAL SECTIONS			
210	E4-TRK-TYP-039	TRACK TYPICAL SECTIONS			
211	E4-TRK-TYP-040	TRACK TYPICAL SECTIONS			
212	E4-TRK-TYP-041	TRACK TYPICAL SECTIONS			
213	E4-TRK-TYP-042	TRACK TYPICAL SECTIONS			
214	E4-TRK-TYP-043	TRACK TYPICAL SECTIONS			
215	E4-TRK-TYP-044	TRACK TYPICAL SECTIONS			
216	E4-TRK-TYP-045	TRACK TYPICAL SECTIONS			

NO.	DATE	BY	CHECK	DESIGN	REVISION / SUBMITTAL

AECOM

90% SUBMISSION - 01/22/16

METROPOLITAN COUNCIL

SOUTHWEST Green Line LRT Extension

CIVIL - VOLUME 3B
GENERAL
VOLUME INDEX OF PLAN SHEETS
SHEET 1

DISCIPLINE: GENERAL

SHEET NAME: 00-GEN-IDX-001

SHEET 2 OF 420

Jan, 21 2016 04:42 pm V:\3400_ADC\CAD\CAD MANAGEMENT\DRAWING LIST\COVER SHEETS 90%\90% GEN-IDX_VOL_01-03.dwg By: v-kriewarnr

CIVIL CONSTRUCTION

SHT #	SHEET NAME	SHEET DESCRIPTION	STATION	STATION	REV
		VOLUME 3B - TRACKWORK (cont'd)			
217	E4-TRK-TYP-046	TRACK TYPICAL SECTIONS			
218	E4-TRK-TYP-047	TRACK TYPICAL SECTIONS			
219	E4-TRK-TYP-048	TRACK TYPICAL SECTIONS			
220	E4-TRK-TYP-049	TRACK TYPICAL SECTIONS			
221	E4-TRK-TYP-050	TRACK TYPICAL SECTIONS			
222	E4-TRK-TYP-051	TRACK TYPICAL SECTIONS			
223	E4-TRK-TYP-052	TRACK TYPICAL SECTIONS			
224	E4-TRK-TYP-053	TRACK TYPICAL SECTIONS			
225	E4-TRK-TYP-054	TRACK TYPICAL SECTIONS			
226	E4-TRK-TYP-055	TRACK TYPICAL SECTIONS			
227	E1-TRK-LAY-001	TRACK PLAN SHEET LAYOUT SHEET 1			
228	E2-TRK-LAY-001	TRACK PLAN SHEET LAYOUT SHEET 2			
229	E2-TRK-LAY-002	TRACK PLAN SHEET LAYOUT SHEET 3			
230	E3-TRK-LAY-001	TRACK PLAN SHEET LAYOUT SHEET 4			
231	E4-TRK-LAY-001	TRACK PLAN SHEET LAYOUT SHEET 5			
232	E4-TRK-LAY-002	TRACK PLAN SHEET LAYOUT SHEET 6			
233	E1-TRK-PRF-001	TRACK PLAN AND PROFILE	2496+00.21	2502+50	
234	E1-TRK-PRF-001A	TRACK PLAN AND PROFILE	1497+00	1502+50	
235	E1-TRK-PRF-002	TRACK PLAN AND PROFILE	2502+50	2509+50	
236	E1-TRK-PRF-002A	TRACK PLAN AND PROFILE	1502+50	1504+20	
237	E1-TRK-PRF-003	TRACK PLAN AND PROFILE	2509+50	2516+50	
238	E1-TRK-PRF-004	TRACK PLAN AND PROFILE	2516+50	2523+50	
239	E1-TRK-PRF-005	TRACK PLAN AND PROFILE	2523+50	2529+50	
240	E1-TRK-PRF-006	TRACK PLAN AND PROFILE	2529+50	2536+00	
241	E1-TRK-PRF-007	TRACK PLAN AND PROFILE	2536+00	2542+00	
242	E1-TRK-PRF-008	TRACK PLAN AND PROFILE	2542+00	2546+50	
243	E1-TRK-PRF-009	TRACK PLAN AND PROFILE	2546+50	2553+00	
244	E1-TRK-PRF-010	TRACK PLAN AND PROFILE	2553+00	2559+50	
245	E1-TRK-PRF-011	TRACK PLAN AND PROFILE	2559+50	2566+50	
246	E1-TRK-PRF-012	TRACK PLAN AND PROFILE	2566+50	2573+50	
247	E1-TRK-PRF-013	TRACK PLAN AND PROFILE	2573+50	2580+50	
248	E1-TRK-PRF-014	TRACK PLAN AND PROFILE	2580+50	2587+50	
249	E1-TRK-PRF-015	TRACK PLAN AND PROFILE	2587+50	2596+50	
250	E2-TRK-PRF-001	TRACK PLAN AND PROFILE	2596+50	2602+00	
251	E2-TRK-PRF-002	TRACK PLAN AND PROFILE	2602+00	2609+00	
252	E2-TRK-PRF-003	TRACK PLAN AND PROFILE	2609+00	2616+00	
253	E2-TRK-PRF-004	TRACK PLAN AND PROFILE	2616+00	2623+00	
254	E2-TRK-PRF-005	TRACK PLAN AND PROFILE	2623+00	2630+00	
255	E2-TRK-PRF-006	TRACK PLAN AND PROFILE	2630+00	2637+00	
256	E2-TRK-PRF-007	TRACK PLAN AND PROFILE	2637+00	2644+00	
257	E2-TRK-PRF-008	TRACK PLAN AND PROFILE	2644+00	2649+50	
258	E2-TRK-PRF-009	TRACK PLAN AND PROFILE	2649+50	2655+00	
259	E2-TRK-PRF-010	TRACK PLAN AND PROFILE	2655+00	2660+50	
260	E2-TRK-PRF-011	TRACK PLAN AND PROFILE	2660+50	2666+00	
261	E2-TRK-PRF-012	TRACK PLAN AND PROFILE	2666+00	2673+00	
262	E2-TRK-PRF-013	TRACK PLAN AND PROFILE	2673+00	2680+00	
263	E2-TRK-PRF-014	TRACK PLAN AND PROFILE	2680+00	2687+00	
264	E2-TRK-PRF-015	TRACK PLAN AND PROFILE	2687+00	2694+00	
265	E2-TRK-PRF-016	TRACK PLAN AND PROFILE	2694+00	2699+00	
266	E2-TRK-PRF-017	TRACK PLAN AND PROFILE	2699+00	2704+00	
267	E2-TRK-PRF-018	TRACK PLAN AND PROFILE	2704+00	2710+00	
268	E2-TRK-PRF-019	TRACK PLAN AND PROFILE	2710+00	2717+00	
269	E2-TRK-PRF-020	TRACK PLAN AND PROFILE	2717+00	2724+00	
270	E2-TRK-PRF-021	TRACK PLAN AND PROFILE	2724+00	2731+00	
271	E2-TRK-PRF-022	TRACK PLAN AND PROFILE	2731+00	2747+00	
272	E3-TRK-PRF-001	TRACK PLAN AND PROFILE	2747+00	2751+00	
273	E3-TRK-PRF-002	TRACK PLAN AND PROFILE	2751+00	2758+00	
274	E3-TRK-PRF-003	TRACK PLAN AND PROFILE	2758+00	2765+00	
275	E3-TRK-PRF-004	TRACK PLAN AND PROFILE	2765+00	2771+00	
276	E3-TRK-PRF-005	TRACK PLAN AND PROFILE	2771+00	2778+00	
277	E3-TRK-PRF-005A	TRACK PLAN AND PROFILE	1772+50	1778+00	
278	E3-TRK-PRF-006	TRACK PLAN AND PROFILE	2778+00	2785+00	
279	E3-TRK-PRF-006A	TRACK PLAN AND PROFILE	1778+00	1785+00	
280	E3-TRK-PRF-007	TRACK PLAN AND PROFILE	2785+00	2791+50	
281	E3-TRK-PRF-007A	TRACK PLAN AND PROFILE	1785+00	1791+50	
282	E3-TRK-PRF-008	TRACK PLAN AND PROFILE	2791+50	2798+00	
283	E3-TRK-PRF-008A	TRACK PLAN AND PROFILE	1791+50	1798+00	
284	E3-TRK-PRF-009	TRACK PLAN AND PROFILE	2798+00	2805+00	
285	E3-TRK-PRF-009A	TRACK PLAN AND PROFILE	1798+00	1801+20	
286	E3-TRK-PRF-010	TRACK PLAN AND PROFILE	2805+00	2812+00	
287	E3-TRK-PRF-011	TRACK PLAN AND PROFILE	2812+00	2819+00	
288	E3-TRK-PRF-012	TRACK PLAN AND PROFILE	2819+00	2826+00	
289	E3-TRK-PRF-013	TRACK PLAN AND PROFILE	2826+00	2833+00	
290	E3-TRK-PRF-014	TRACK PLAN AND PROFILE	2833+00	2842+00	
291	E4-TRK-PRF-001	TRACK PLAN AND PROFILE	2842+00	2848+00	
292	E4-TRK-PRF-002	TRACK PLAN AND PROFILE	2848+00	2854+00	
293	E4-TRK-PRF-003	TRACK PLAN AND PROFILE	2854+00	2860+00	
294	E4-TRK-PRF-004	TRACK PLAN AND PROFILE	2860+00	2865+50	
295	E4-TRK-PRF-005	TRACK PLAN AND PROFILE	2865+50	2871+50	
296	E4-TRK-PRF-006	TRACK PLAN AND PROFILE	2871+50	2879+00	
297	E4-TRK-PRF-007	TRACK PLAN AND PROFILE	2879+00	2886+50	
298	E4-TRK-PRF-008	TRACK PLAN AND PROFILE	2886+50	2891+50	
299	E4-TRK-PRF-009	TRACK PLAN AND PROFILE	2891+50	2897+00	
300	E4-TRK-PRF-010	TRACK PLAN AND PROFILE	2897+00	2904+00	
301	E4-TRK-PRF-011	TRACK PLAN AND PROFILE	2904+00	2911+00	
302	E4-TRK-PRF-012	TRACK PLAN AND PROFILE	2911+00	2918+00	
303	E4-TRK-PRF-013	TRACK PLAN AND PROFILE	2918+00	2925+00	
304	E4-TRK-PRF-014	TRACK PLAN AND PROFILE	2925+00	2932+00	
305	E4-TRK-PRF-014A	TRACK PLAN AND PROFILE	1930+40	1932+00	
306	E4-TRK-PRF-015	TRACK PLAN AND PROFILE	2932+00	2937+00	
307	E4-TRK-PRF-015A	TRACK PLAN AND PROFILE	1932+00	1937+00	
308	E4-TRK-PRF-016	TRACK PLAN AND PROFILE	2937+00	2943+50	
309	E4-TRK-PRF-016A	TRACK PLAN AND PROFILE	1937+00	1941+69.09	
310	E4-TRK-PRF-017	TRACK PLAN AND PROFILE	2943+50	2950+00	
311	E4-TRK-PRF-018	TRACK PLAN AND PROFILE	2950+00	2955+50	
312	E4-TRK-PRF-019	TRACK PLAN AND PROFILE	2955+50	2962+34.33	
313	E0-TRK-NTS-006	FREIGHT SOIL CORRECTION TABLE SHEET 1			
314	E0-TRK-NTS-007	FREIGHT SOIL CORRECTION TABLE SHEET 2			
315	E0-TRK-NTS-008	FREIGHT SOIL CORRECTION TABLE SHEET 3			
316	E1-FRT-ALG-001	FREIGHT ALIGNMENT DATA SHEET 1			
317	E1-FRT-ALG-002	FREIGHT ALIGNMENT DATA SHEET 2			
318	E2-FRT-ALG-001	FREIGHT ALIGNMENT DATA SHEET 3			
319	E3-FRT-ALG-001	FREIGHT ALIGNMENT DATA SHEET 4			
320	E4-FRT-ALG-001	FREIGHT ALIGNMENT DATA SHEET 5			
321	E1-FRT-CHT-001	FREIGHT TRACK CHART SHEET 1			
322	E1-FRT-CHT-002	FREIGHT TRACK CHART SHEET 2			
323	E1-FRT-CHT-003	FREIGHT TRACK CHART SHEET 3			
324	E1-FRT-CHT-004	FREIGHT TRACK CHART SHEET 4			
325	E1-FRT-CHT-005	FREIGHT TRACK CHART SHEET 5			
326	E1-FRT-CHT-006	FREIGHT TRACK CHART SHEET 6			
327	E1-FRT-CHT-007	FREIGHT TRACK CHART SHEET 7			
328	E1-FRT-CHT-008	FREIGHT TRACK CHART SHEET 8			
329	E2-FRT-CHT-001	FREIGHT TRACK CHART SHEET 9			
330	E3-FRT-CHT-001	FREIGHT TRACK CHART SHEET 10			
331	E3-FRT-CHT-002	FREIGHT TRACK CHART SHEET 11			
332	E4-FRT-CHT-001	FREIGHT TRACK CHART SHEET 12			
333	E4-FRT-CHT-002	FREIGHT TRACK CHART SHEET 13			
334	E0-FRT-LAY-001	FREIGHT PLAN SHEET LAYOUT SHEET 1			
335	E0-FRT-LAY-002	FREIGHT PLAN SHEET LAYOUT SHEET 2			
336	E0-FRT-LAY-003	FREIGHT PLAN SHEET LAYOUT SHEET 3			
337	E0-FRT-LAY-004	FREIGHT PLAN SHEET LAYOUT SHEET 4			
338	E1-FRT-PRF-001	FREIGHT PLAN AND PROFILE	33+00	40+00	
339	E1-FRT-PRF-001A	FREIGHT PLAN AND PROFILE	33+00	36+39.95	
340	E1-FRT-PRF-001B	FREIGHT PLAN AND PROFILE	36+83.90	41+16.21	
341	E1-FRT-PRF-002	FREIGHT PLAN AND PROFILE	40+00	47+00	
342	E1-FRT-PRF-003	FREIGHT PLAN AND PROFILE	47+00	54+00	
343	E1-FRT-PRF-004	FREIGHT PLAN AND PROFILE	54+00	61+00	
344	E1-FRT-PRF-005	FREIGHT PLAN AND PROFILE	61+00	68+00	
345	E1-FRT-PRF-006	FREIGHT PLAN AND PROFILE	68+00	75+00	
346	E1-FRT-PRF-007	FREIGHT PLAN AND PROFILE	75+00	82+00	
347	E1-FRT-PRF-008	FREIGHT PLAN AND PROFILE	82+00	89+00	
348	E1-FRT-PRF-009	FREIGHT PLAN AND PROFILE	89+00	96+00	
349	E1-FRT-PRF-010	FREIGHT PLAN AND PROFILE	96+00	99+40.62	
350	E2-FRT-PRF-001	FREIGHT PLAN AND PROFILE	99+40.62	103+00	
351	E2-FRT-PRF-002	FREIGHT PLAN AND PROFILE	103+00	110+00	
352	E2-FRT-PRF-003	FREIGHT PLAN AND PROFILE	110+00	117+00	
353	E2-FRT-PRF-004	FREIGHT PLAN AND PROFILE	117+00	124+00	
354	E2-FRT-PRF-005	FREIGHT PLAN AND PROFILE	124+00	131+00	
355	E2-FRT-PRF-006	FREIGHT PLAN AND PROFILE	131+00	138+00	
356	E2-FRT-PRF-007	FREIGHT PLAN AND PROFILE	138+00	145+00	
357	E2-FRT-PRF-008	FREIGHT PLAN AND PROFILE	145+00	152+00	
358	E2-FRT-PRF-009	FREIGHT PLAN AND PROFILE	152+00	159+00	
359	E2-FRT-PRF-010	FREIGHT PLAN AND PROFILE	159+00	166+00	
360	E2-FRT-PRF-011	FREIGHT PLAN AND PROFILE	166+00	173+00	
361	E2-FRT-PRF-012	FREIGHT PLAN AND PROFILE	173+00	180+00	
362	E2-FRT-PRF-013	FREIGHT PLAN AND PROFILE	180+00	187+00	
363	E2-FRT-PRF-014	FREIGHT PLAN AND PROFILE	187+00	194+00	
364	E2-FRT-PRF-015	FREIGHT PLAN AND PROFILE	194+00	201+00	
365	E2-FRT-PRF-016	FREIGHT PLAN AND PROFILE	201+00	208+00	
366	E2-FRT-PRF-017	FREIGHT PLAN AND PROFILE	208+00	215+00	
367	E2-FRT-PRF-018	FREIGHT PLAN AND PROFILE	215+00	222+00	
368	E2-FRT-PRF-019	FREIGHT PLAN AND PROFILE	222+00	229+00	
369	E2-FRT-PRF-020	FREIGHT PLAN AND PROFILE	229+00	234+00	
370	E2-FRT-PRF-021	FREIGHT PLAN AND PROFILE	136+61.08	143+00	
371	E2-FRT-PRF-022	FREIGHT PLAN AND PROFILE	143+00	148+50	
372	E2-FRT-PRF-023	FREIGHT PLAN AND PROFILE	148+50	154+00	
373	E2-FRT-PRF-024	FREIGHT PLAN AND PROFILE	154+00	160+83.67	
374	E3-FRT-PRF-001	FREIGHT PLAN AND PROFILE	300+00	306+00	
375	E3-FRT-PRF-002	FREIGHT PLAN AND PROFILE	306+00	313+00	
376	E3-FRT-PRF-003	FREIGHT PLAN AND PROFILE	313+00	319+50	
377	E3-FRT-PRF-004	FREIGHT PLAN AND PROFILE	319+50	326+50	
378	E3-FRT-PRF-005	FREIGHT PLAN AND PROFILE	326+50	333+50	
379	E3-FRT-PRF-006	FREIGHT PLAN AND PROFILE	333+50	340+00	
380	E3-FRT-PRF-007	FREIGHT PLAN AND PROFILE	340+00	343+42	
381	E3-FRT-PRF-008	FREIGHT PLAN AND PROFILE	357-29.94	358+49.94	
382	E4-FRT-PRF-001	FREIGHT PLAN AND PROFILE	92+38.69	98+50	
383	E4-FRT-PRF-002	FREIGHT PLAN AND PROFILE	98+50	105+50	
384	E4-FRT-PRF-003	FREIGHT PLAN AND PROFILE	105+50	112+00	
385	E4-FRT-PRF-004	FREIGHT PLAN AND PROFILE	112+00	118+50	
386	E4-FRT-PRF-005	FREIGHT PLAN AND PROFILE	118+50	125+00	
387	E4-FRT-PRF-006	FREIGHT PLAN AND PROFILE	125+00	128+00	
388	E1-FRT-TMP-EXCELSIOR-001	TEMP. FREIGHT EXCELSIOR ALIGNMENT DATA			
389	E1-FRT-TMP-EXCELSIOR-002	TEMP. FREIGHT EXCELSIOR TYPICAL SECTIONS			
390	E1-FRT-TMP-EXCELSIOR-003	TEMP. FREIGHT EXCELSIOR TYPICAL SECTIONS			
391	E1-FRT-TMP-EXCELSIOR-004	TEMP. FREIGHT EXCELSIOR TYPICAL SECTIONS			
392	E1-FRT-TMP-EXCELSIOR-005	TEMP. FREIGHT EXCELSIOR PLAN AND PROFILE	41+76.21	47+00	
393	E1-FRT-TMP-EXCELSIOR-006	TEMP. FREIGHT EXCELSIOR PLAN AND PROFILE	47+00	54+00	
394	E1-FRT-TMP-EXCELSIOR-007	TEMP. FREIGHT EXCELSIOR PLAN AND PROFILE	54+00	61+00	
395	E1-FRT-TMP-EXCELSIOR-008	TEMP. FREIGHT EXCELSIOR PLAN AND PROFILE	61+00	68+00	
396	E1-FRT-TMP-EXCELSIOR-009	TEMP. FREIGHT EXCELSIOR PLAN AND PROFILE	68+00	73+03.71	
397	E2-FRT-TMP-WOODDALE-001	TEMP. FREIGHT TH 100 ALIGNMENT DATA			
398	E2-FRT-TMP-WOODDALE-002	FRIEGHT TYPICAL SECTIONS			
399	E2-FRT-TMP-WOODDALE-003	TEMP. FREIGHT WOODDALE PLAN AND PROFILE	183+30.67	187+00	
400	**E2-FRT-TMP-WOODDALE-004**	TEMP. FREIGHT WOODDALE PLAN AND PROFILE	187+00	194+00	
401	E3-FRT-KW_TMP_A-001	TEMP. FREIGHT KW_TMP_A ALIGNMENT DATA			
402	E3-FRT-KW_TMP_A-002	TEMP. FREIGHT KW_TMP_A TYPICAL SECTIONS			
403	E3-FRT-KW_TMP_A-003	TEMP. FREIGHT KW_TMP_A PLAN AND PROFILE	315+19.95	319+50	
404	E3-FRT-KW_TMP_A-004	TEMP. FREIGHT KW_TMP_A PLAN AND PROFILE	319+50	326+50	
405	E3-FRT-KW_TMP_A-005	TEMP. FREIGHT KW_TMP_A PLAN AND PROFILE	326+50	329+31.70	
406	E3-FRT-KW_TMP_B-001	TEMP. FREIGHT KW_TMP_B ALIGNMENT DATA			
407	E3-FRT-KW_TMP_B-002	TEMP. FREIGHT KW_TMP_B TYPICAL SECTIONS			
408	E3-FRT-KW_TMP_B-003	TEMP. FREIGHT KW_TMP_B TYPICAL SECTIONS			
409	E3-FRT-KW_TMP_B-004	TEMP. FREIGHT KW_TMP_B PLAN AND PROFILE	301+78.87	306+00	
410	E3-FRT-KW_TMP_B-005	TEMP. FREIGHT KW_TMP_B PLAN AND PROFILE	306+00	313+00	
411	E3-FRT-KW_TMP_B-006	TEMP. FREIGHT KW_TMP_B PLAN AND PROFILE	313+00	319+50	
412	E3-FRT-KW_TMP_B-007	TEMP. FREIGHT KW_TMP_B PLAN AND PROFILE	319+50	321+58.76	
413	E3-FRT-KW_TMP_C-001	TEMP. FREIGHT KW_TMP_C ALIGNMENT DATA			
414	E3-FRT-KW_TMP_C-002	TEMP. FREIGHT KW_TMP_C TYPICAL SECTIONS			
415	E3-FRT-KW_TMP_C-003	TEMP. FREIGHT KW_TMP_C PLAN AND PROFILE	324+04.85	326+50	
416	E3-FRT-KW_TMP_C-004	TEMP. FREIGHT KW_TMP_C PLAN AND PROFILE	326+50	329+41.83	
417	E3-FRT-KW_TMP_D-001	TEMP. FREIGHT KW_TMP_D ALIGNMENT DATA			
418	E3-FRT-KW_TMP_D-002	TEMP. FREIGHT KW_TMP_D TYPICAL SECTIONS			
419	E3-FRT-KW_TMP_D-003	TEMP. FREIGHT KW_TMP_D PLAN AND PROFILE	314+60.73	319+50	
420	E3-FRT-KW_TMP_D-004	TEMP. FREIGHT KW_TMP_D PLAN AND PROFILE	319+50	320+58.45	

NO.	DATE	BY	CHECK	DESIGN	REVISION / SUBMITTAL

AECOM

90% SUBMISSION - 01/22/16

METROPOLITAN COUNCIL

SOUTHWEST Green Line LRT Extension

CIVIL - VOLUME 3B GENERAL VOLUME INDEX OF PLAN SHEETS SHEET 2

DISCIPLINE: GENERAL

SHEET NAME: 00-GEN-IDX-002

SHEET 3 OF 420

Jan, 21 2016 04:42 pm v:\3400_ADC\CAD\CAD MANAGEMENT\DRAWING LIST\COVER SHEETS 90%\90% GEN-IDX_VOL_01-03.dwg By: v-kriewarnr

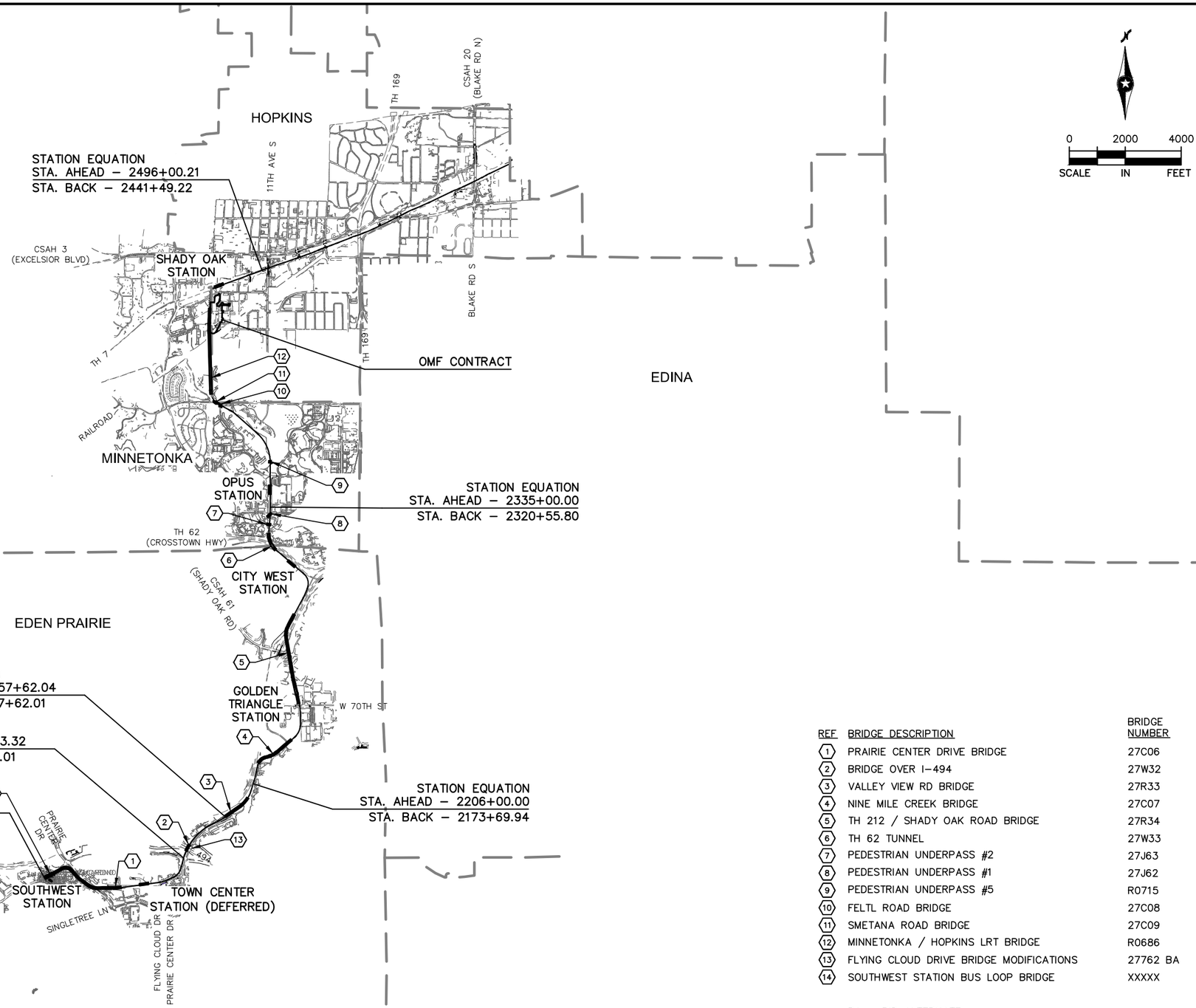

REF	BRIDGE DESCRIPTION	BRIDGE NUMBER
1	PRAIRIE CENTER DRIVE BRIDGE	27C06
2	BRIDGE OVER I–494	27W32
3	VALLEY VIEW RD BRIDGE	27R33
4	NINE MILE CREEK BRIDGE	27C07
5	TH 212 / SHADY OAK ROAD BRIDGE	27R34
6	TH 62 TUNNEL	27W33
7	PEDESTRIAN UNDERPASS #2	27J63
8	PEDESTRIAN UNDERPASS #1	27J62
9	PEDESTRIAN UNDERPASS #5	R0715
10	FELTL ROAD BRIDGE	27C08
11	SMETANA ROAD BRIDGE	27C09
12	MINNETONKA / HOPKINS LRT BRIDGE	R0686
13	FLYING CLOUD DRIVE BRIDGE MODIFICATIONS	27762 BA
14	SOUTHWEST STATION BUS LOOP BRIDGE	XXXXX

BA – BID ALTERNATE

NO.	DATE	BY	CHECK	DESIGN	REVISION / SUBMITTAL

AECOM

90% SUBMISSION - 01/22/16

METROPOLITAN COUNCIL

SOUTHWEST Green Line LRT Extension

CIVIL - VOLUME 3B
GENERAL
KEY MAP
SHEET 1

DISCIPLINE: GENERAL

SHEET NAME: W0-GEN-KEY-001

SHEET 4 OF 420

Jan, 16 2016 03:24 pm V:\3400_ADC\CAD\CAD MANAGEMENT\DRAWING LIST\COVER SHEETS 90%\W0-GEN-KEY.dwg By: V-KriewaMR

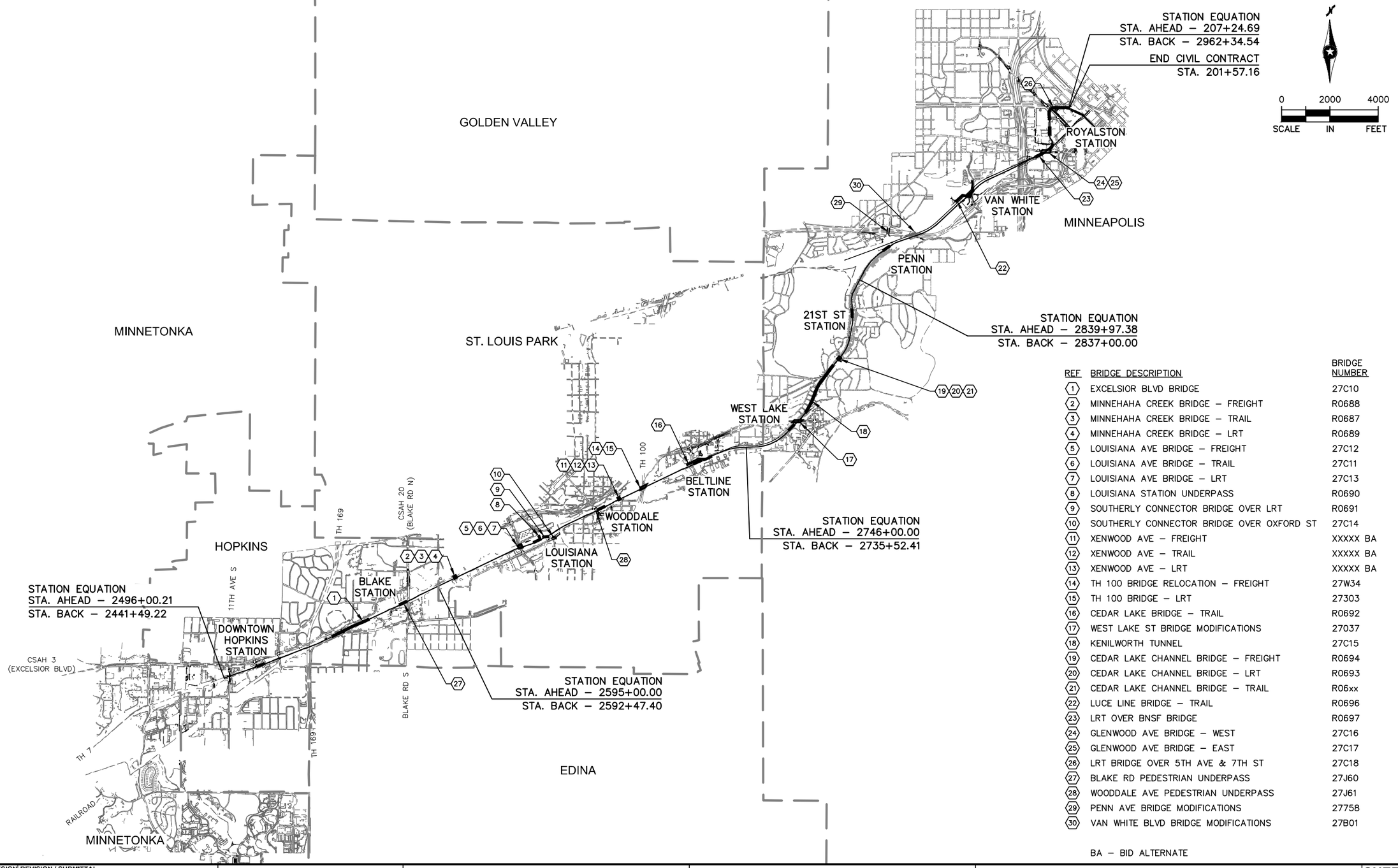

REF	BRIDGE DESCRIPTION	BRIDGE NUMBER
1	EXCELSIOR BLVD BRIDGE	27C10
2	MINNEHAHA CREEK BRIDGE – FREIGHT	R0688
3	MINNEHAHA CREEK BRIDGE – TRAIL	R0687
4	MINNEHAHA CREEK BRIDGE – LRT	R0689
5	LOUISIANA AVE BRIDGE – FREIGHT	27C12
6	LOUISIANA AVE BRIDGE – TRAIL	27C11
7	LOUISIANA AVE BRIDGE – LRT	27C13
8	LOUISIANA STATION UNDERPASS	R0690
9	SOUTHERLY CONNECTOR BRIDGE OVER LRT	R0691
10	SOUTHERLY CONNECTOR BRIDGE OVER OXFORD ST	27C14
11	XENWOOD AVE – FREIGHT	XXXXX BA
12	XENWOOD AVE – TRAIL	XXXXX BA
13	XENWOOD AVE – LRT	XXXXX BA
14	TH 100 BRIDGE RELOCATION – FREIGHT	27W34
15	TH 100 BRIDGE – LRT	27303
16	CEDAR LAKE BRIDGE – TRAIL	R0692
17	WEST LAKE ST BRIDGE MODIFICATIONS	27037
18	KENILWORTH TUNNEL	27C15
19	CEDAR LAKE CHANNEL BRIDGE – FREIGHT	R0694
20	CEDAR LAKE CHANNEL BRIDGE – LRT	R0693
21	CEDAR LAKE CHANNEL BRIDGE – TRAIL	R06xx
22	LUCE LINE BRIDGE – TRAIL	R0696
23	LRT OVER BNSF BRIDGE	R0697
24	GLENWOOD AVE BRIDGE – WEST	27C16
25	GLENWOOD AVE BRIDGE – EAST	27C17
26	LRT BRIDGE OVER 5TH AVE & 7TH ST	27C18
27	BLAKE RD PEDESTRIAN UNDERPASS	27J60
28	WOODDALE AVE PEDESTRIAN UNDERPASS	27J61
29	PENN AVE BRIDGE MODIFICATIONS	27758
30	VAN WHITE BLVD BRIDGE MODIFICATIONS	27B01

BA – BID ALTERNATE

NO.	DATE	BY	CHECK	DESIGN	REVISION / SUBMITTAL

AECOM

90% SUBMISSION - 01/22/16

METROPOLITAN COUNCIL

SOUTHWEST Green Line LRT Extension

CIVIL - VOLUME 3B
GENERAL
KEY MAP
SHEET 2

DISCIPLINE: GENERAL

SHEET NAME: E0-GEN-KEY-002

SHEET 5 OF 420

Jan, 16 2016 03:25 pm V:\3400_ADC\CAD\CAD MANAGEMENT\DRAWING LIST\COVER SHEETS 90%\E0-GEN-KEY.dwg By: V-KriewaMR

SYMBOLS

- PROPOSED DIRECTIONAL LANE USE
- EXISTING DIRECTIONAL LANE USE
- FLASHER (FREIGHT & PEDESTRIAN)
- CROSSING GATE (FREIGHT & LRT)
- CANTILEVER SIGNAL
- RAIL TURNOUT
- RAIL CROSSOVER (DOUBLE)
- RAIL CROSSOVER (SINGLE)
- POINT OF SWITCH (PS)
- OCS POLE FOUNDATION
- RAIL LUBRICATOR
- POINT OF INTERSECTION (PI)
- W2–200 — RAILROAD CURVE NUMBER
- ACCESSIBLE PEDESTRIAN CURB RAMP (DESIGN VARIES)
- HANDICAP PARKING STALL
- TACTILE WARNING STRIP
- TPSS BUILDING (TPSS–SW###) – NIC
  TUNNEL SYSTEMS HOUSE (TSY–SW###) – NIC
- SIGNAL / COMMUNICATION HOUSE – NIC
- STORM SEWER MANHOLE
- STORM SEWER CATCH BASIN
- STORM SEWER FLARED END SECTION
- STORM SEWER CLEAN–OUT
- STORM SEWER PUMP STATION
- DTXX
  INV XXX.XX — DRAINTILE ID
- XXXX – ST — STORM SEWER STRUCTURE ID
- C / E — BUS SHELTER
- ROADWAY / PEDESTRIAN LIGHT

LINETYPES

- ROADWAY ℄
- TRACK ℄ (LRT)
- TRACK ℄ (FRT)
- RETAINING WALL
- BALLAST CURB
- TUNNEL WALL
- FENCE
- EX ROW
- PROP ROW
- PROP TCE
- PROP PE
- FENCE / RAILING
- ID – ID — FREIGHT INTRUSION DETECTION
- CONCRETE CURB AND GUTTER
- TRAIL (WIDTH VARIES)
- SIDEWALK
- DRIVEWAY
- BRIDGE
- SAWCUT
- DELINEATED WETLAND
- BMP (NWL) WATER EDGE
- PROPOSED FLOODPLAIN MITIGATION AREA
- SILT FENCE
- BALE BARRIER
- STORM SEWER
- CASING PIPE
- PIPE REMOVAL
- STRUCTURE REMOVAL
- FLOATING SILT FENCE
- SUPER DUTY SILT FENCE
- CONSTRUCTION LIMITS
- ROCK WEEPER
- DIVERSION DITCH
- OVERLAND FLOW
- CROSSWALK
- STOP BAR
- MEDIAN NOSE
- EP-EP-18 — WETLAND ID

CONSTRUCTION PACKAGE NOTE

NOTE: THE SWLRT CONSTRUCTION IS BEING IMPLEMENTED THROUGH THREE MAIN CONSTRUCTION PACKAGES; CIVIL, SYSTEMS & TUNNEL FACILITIES (SYS), AND OPERATIONS & MAINTENANCE FACILITY (OMF). CERTAIN SYS AND OMF SYMBOLS ARE SHOWN ON THE CIVIL CONTRACT PLANS FOR INFORMATION ONLY AND CERTAIN FACILITIES ARE NOT PART OF THE CIVIL CONTRACT.

Jan, 18 2016 07:43 am V:\3400_ADC\CAD\CAD MANAGEMENT\DRAWING LIST\COVER SHEETS 90%\CIV-GEN-NTS.dwg By: V-KriewaMR

NO.	DATE	BY	CHECK	DESIGN	REVISION / SUBMITTAL

AECOM

90% SUBMISSION - 01/22/16

METROPOLITAN COUNCIL

SOUTHWEST Green Line LRT Extension

CIVIL - VOLUME 3B
GENERAL
NOTES, ABBREVIATIONS, AND SYMBOLS
SHEET 1

DISCIPLINE: GENERAL

SHEET NAME: 00-GEN-NTS-001

SHEET 6 OF 420

ABBREVIATIONS

3-2 (EG)	SIGNAL HEAD NUMBER (PHASE 3, NO. 2)
AD	ALGEBRAIC DIFFERENCE
AVE	AVENUE
AWF	ADVANCE WARNING FLASHER
BA	BID ALTERNATE
BGN	BEGIN
BP	BEGINNING POINT
BVCE	BEGINNING VERTICAL CURVE ELEVATION
BVCS	BEGINNING VERTICAL CURVE STATION
BLVD	BOULEVARD
BMP	BEST MANAGEMENT PRACTICE
BNSF	BURLINGTON NORTHERN SANTA FE RAILWAY
C&G	CURB AND GUTTER
℄	CENTERLINE
CB	CATCH BASIN
CE	CLEARANCE ENVELOPE
CIR	CIRCLE
CO	DRAINTILE CLEANOUT STRUCTURE
CP	CANADIAN PACIFIC
CPRAIL	CANADIAN PACIFIC RAILWAY
CS	CURVE TO SPIRAL
CSAH	COUNTY STATE AID HIGHWAY
D&U	DRAINAGE AND UTILITY
DF	DIRECT FIXATION
DR	DRIVE
DT	DRAINTILE
DTL	DETAIL
DWY	DRIVEWAY
E	EAST
Ea	ACTUAL SUPERELEVATION (INCHES)
EB	EAST BOUND
EL or ELEV	ELEVATION
EP	ENDING POINT
ESMT	EASEMENT
Eu	UNBALANCED SUPERELEVATION (INCHES)
EVCE	ENDING VERTICAL CURVE ELEVATION
EVCS	ENDING VERTICAL CURVE STATION
EVP	EMERGENCY VEHICLE PRE-EMPTION
EX	EXISTING
FES	FLARED END SECTION
FYA	FLASHING YELLOW ARROW
GR RD	GROUND ROD
GRN	GREEN INDICATION
HCRRA	HENNEPIN COUNTY REGIONAL RAILROAD AUTHORITY
INL	BRIDGE DRAIN INLET
INS GR	INSULATED GROUND
IP	INPLACE
LED	LIGHT EMITTING DIODE
LH	LEFT HAND
LN	LANE
LRCI	LOCALLY REQUESTED CAPITAL INVESTMENT
LRT	LIGHT RAIL TRANSIT
LRV	LIGHT RAIL VEHICLE
LT	LEFT
LUM	LUMINAIRE
L_c	CURVE LENGTH (FEET)
L_s	SPIRAL LENGTH (FEET)
MIN	MINIMUM
MPH	MILES PER HOUR
MPLS	CITY OF MINNEAPOLIS
MPRB	MINNEAPOLIS PARK AND RECREATION BOARD
N	NORTH
NB	NORTH BOUND
NIC	NOT IN CONTRACT
NO	NUMBER
NWL	NORMAL WATER LINE
OCS	OUTLET CONTROL SYSTEM
OCS	OVERHEAD CONTACT SYSTEM
OMF	OPERATIONS AND MAINTENANCE FACILITY
OH	OVERHEAD
P1-1 (EG)	PEDESTRIAN HEAD (PHASE 1, NO. 1)
PB2-1 (EG)	PUSHBUTTON (PHASE 2, NO. 1)
PC	POINT OF CURVE
PE	PERMANENT EASEMENT
PED	PEDESTRIAN
PITO	POINT OF INTERSECTION OF TURNOUT
PKWY	PARKWAY
POB	POINT OF BEGINNING
POE	POINT OF ENDING
POT	POINT ON TANGENT
PROP	PROPOSED
PS	POINT OF SWITCH
PT	POINT OF TANGENT
PVI	POINT OF VERTICAL INTERSECTION
R	RADIUS (FEET)
RCP	REINFORCED CONCRETE PIPE
RD	ROAD
RL	RAIL LUBRICATOR
r	RATE OF CHANGE VERTICAL CURVE
RH	RIGHT HAND
ROW	RIGHT OF WAY
RT	RIGHT
S	SOUTH
SB	SOUTH BOUND
SC	SPIRAL TO CURVE
SIG-COMM	SIGNAL COMMUNICATION
SOP	SOURCE OF POWER
ST	STREET
ST	SPIRAL TO TANGENT
ST	STORM MANHOLE STRUCTURE
STA	STATION
TCE	TEMPORARY CONSTRUCTION EASEMENT
TH	TRUNK HIGHWAY
THRU	THROUGH
TOR	TOP OF RAIL
TPSS	TRACTION POWER SUBSTATION
TRK	TRACK
TS	TANGENT TO SPIRAL
TYP	TYPICAL
UG	UNDERGROUND
V	DESIGN VELOCITY (MPH)
VC	VERTICAL CURVE
VDE	VEHICLE DYNAMIC ENVELOPE
W	WEST
WB	WEST BOUND
WLK	WALK INDICATION

TRAIL INDEX

ABBREVIATED NAME	FULL NAME / LOCATION
TRAIL 1	UNDER RED CIRCLE DR, LRT, AND YELLOW CIRCLE DR
TRAIL 2	FROM TRAIL 1 TO GREEN CIRCLE DR
TRAIL 3	OPUS STATION ACCESS FROM BREN RD E
TRAIL 4	FROM BREN RD W TO TRAIL 5
TRAIL 5	FROM OPUS STATION TO GREEN CIRCLE DR
TRAIL 6	FROM TRAIL 5 TO SMETANA RD
CEDAR LAKE TRAIL	CEDAR LAKE LRT REGIONAL TRAIL/FROM SHADY OAK STATION TO 11TH AVE
CEDAR LAKE TRAIL	CEDAR LAKE LRT REGIONAL TRAIL/WEST OF EXCELSIOR
CEDAR LAKE TRAIL	CEDAR LAKE LRT REGIONAL LRT TRAIL/BETWEEN EXCELSIOR AND KENILWORTH TRAIL CONNECTION
MIDTOWN GREENWAY	MIDTOWN GREENWAY/EAST OF KENILWORTH TRAIL CONNECTION
TRAIL A	KENILWORTH TRAIL (SECONDARY)/BETWEEN CEDAR-ISLES CHANNEL AND 21ST STREET STATION
TRAIL B	KENILWORTH TRAIL (SECONDARY)/BETWEEN 21ST STREET STATION AND PENN STATION
TRAIL B	CEDAR LAKE TRAIL (SECONDARY)/EAST OF PENN STATION
TRAIL C	10' CONNECTOR TRAIL FROM CEDAR LAKE LRT REGIONAL TRAIL TO TYLER AVE.
TRAIL D	10' CONNECTOR TRAIL/BELTLINE STATION TO CEDAR LAKE LRT REGIONAL TRAIL
KENILWORTH TRAIL	KENILWORTH TRAIL (MAIN)/W LAKE ST TO PENN STATION
CEDAR LAKE TRAIL	CEDAR LAKE TRAIL (MAIN)/PENN STATION TO TH 394
TRAIL E	KENILWORTH TRAIL (SECONDARY)/EAST OF W LAKE ST
TRAIL F	KENILWORTH TRAIL (SECONDARY)/WEST OF CEDAR LAKE PKWY
TRAIL G	NOT USED
TRAIL H	10' CONNECTOR TRAIL/EAST OF PENN STATION TO KENWOOD PKWY
TRAIL I	10' CONNECTOR TRAIL FROM CEDAR LAKE REGIONAL TRAIL TO CSAH 20 (BLAKE RD)
CEDAR LAKE TRAIL	CEDAR LAKE TRAIL (MAIN)/AT-GRADE CROSSING AT PENN STATION
TRAIL J	CEDAR LAKE TRAIL (SECONDARY)/NORTHWEST OF PENN STATION
TRAIL K	CEDAR LAKE TRAIL (SECONDARY)/NORTHWEST OF PENN STATION
TRAIL L	CEDAR LAKE TRAIL (SECONDARY)/EAST OF PENN STATION
TRAIL M	10' CONNECTOR TRAIL FROM CEDAR LAKE REGIONAL TRAIL TO CSAH 20 (BLAKE RD)
TRAIL N	8' CONNECTOR TRAIL FROM CEDAR LAKE TRAIL TO EDGEBROOOK DRIVE
TRAIL O	8' CONNECTOR TRAIL FROM CEDAR LAKE TRAIL TO W LAKE STREET
TRAIL P	8' CONNECTOR TRAIL FROM CEDAR LAKE TRAIL TO LOUISIANA AVE
TRAIL Q	10' CONNECTOR TRAIL FROM CEDAR LAKE TRAIL TO TH 7 SERVICE ROAD
TRAIL R	20' CONNECTOR TRAIL FROM VAN WHITE STATION TO CEDAR LAKE TRAIL
TRAIL S	10' CONNECTOR TRAIL FROM CEDAR LAKE REGIONAL TRAIL TO BELTLINE BLVD
TRAIL T	8' CONNECTOR TRAIL FROM VAN WHITE STATION TO VAN WHITE MEMORIAL BLVD
TRAIL U	10' TRAIL PARALLEL TO CEDAR LAKE PKWY
LUCE LINE TRAIL	LUCE LINE REGIONAL TRAIL/ON BRIDGE OVER LIGHT RAIL
TRAIL V	CONNECTOR TRAIL TO LUCE LINE REGIONAL TRAIL WEST OF LIGHT RAIL
TRAIL W	CONNECTOR TRAIL TO LUCE LINE REGIONAL TRAIL WEST OF LIGHT RAIL
TRAIL X	NOT USED
TRAIL Y	12' CONNECTOR TRAIL FROM CEDAR LAKE REGIONAL TRAIL TO WOODDALE AVE S
TRAIL Z	12' CONNECTOR TRAIL FROM CEDAR LAKE REGIONAL TRAIL TO WOODDALE AVE S
TRAIL AA	8' PEDESTRIAN CONNECTOR TRAIL FROM TRAIL B TO PENN STATION
TRAIL BB	8' PEDESTRIAN CONNECTOR TRAIL FROM TRAIL B TO PENN STATION
TRAIL CC	10' CONNECTOR TRAIL FROM KENILWORTH TRAIL (MAIN) TO PENN STATION

NO.	DATE	BY	CHECK	DESIGN	REVISION / SUBMITTAL

AECOM

90% SUBMISSION - 01/22/16

METROPOLITAN COUNCIL

SOUTHWEST Green Line LRT Extension

CIVIL - VOLUME 3B
GENERAL
NOTES, ABBREVIATIONS, AND SYMBOLS
SHEET 2

DISCIPLINE: GENERAL

SHEET NAME: 00-GEN-NTS-002

SHEET 7 OF 420

Jan, 16 2016 03:26 pm V:\3400_ADC\CAD\CAD MANAGEMENT\DRAWING LIST\COVER SHEETS 90%\CIV-GEN-NTS.dwg By: V-KriewaMR

TRACK GENERAL NOTES

1. THE EASTBOUND (EB) TRACK IS THE RIGHT TRACK AND IS USED FOR HORIZONTAL ALIGNMENT CONTROL FOR THE PROJECT. THIS TRACK ALIGNMENT IS REFERENCED AS TRACK 2. PROFILE AND CROSS SECTION STATIONING FOR THIS PROJECT ARE BASED ON STATIONS ESTABLISHED FOR THE TRACK 2 CENTER LINE. TRACK 2 STATION EQUATIONS OCCUR AT SEGMENT LIMITS AND AT THE CIVIL WEST/CIVIL EAST MATCH POINT.
2. THE WESTBOUND (WB) TRACK IS THE LEFT TRACK AND HAS A SEPARATELY DEFINED GEOMETRY WITH STATION EQUALITIES, TO THE TRACK 2 CENTER LINE, AT SPIRAL–TO–TANGENT (ST) POINTS. THIS TRACK ALIGNMENT IS REFERENCED AS TRACK 1.
3. TRACK CENTER DISTANCES ARE MEASURED PERPENDICULAR TO THE TRACK 2 CENTER LINE AND ARE LABELED AT ENDS OF DOUBLE TANGENT TRACKS, AT THE MAXIMUM TRACK SPACING IN HORIZONTAL CURVES, AND AT SELECT CARDINAL POINTS IN TRACK WIDENING AND NARROWING SEGMENTS.
4. SUPERELEVATION IS ATTAINED (AND REMOVED) LINEARLY THROUGH THE FULL LENGTH OF THE SPIRAL TRANSITION CURVES BY MAINTAINING TOP OF INSIDE (LOW) RAIL AT PROFILE GRADE AND BY RAISING (AND LOWERING) OUTSIDE RAIL AN AMOUNT EQUAL TO THE ACTUAL SUPERELEVATION (Ea).
5. OCS POLES ARE NOT IN CONTRACT (NIC) AND ARE SHOWN FOR REFERENCE ONLY.
6. TRACK PLANS AND TYPICAL SECTIONS INCLUDE ELEMENTS SUCH AS, BUT NOT LIMITED TO, FENCING, TRAILS, BRIDGES, RETAINING WALLS, TUNNELS, ROADWAYS, DRAINAGE, STATIONS AND SYSTEMS. DETAILS FOR THESE ITEMS ARE INCLUDED IN THEIR RESPECTIVE VOLUMES.
7. WORK IN AREAS PARALLEL TO ACTIVE FREIGHT RAILROAD SHALL MAINTAIN SAFE WORKING DISTANCES FROM ACTIVE FREIGHT TRACK. IF SAFE WORKING DISTANCES ARE NOT POSSIBLE, WORK SHALL BE DONE WITH THE FULL KNOWLEDGE AND APPROVAL OF THE OPERATING RAILROAD AND UTILIZE AN OPERATING RAILROAD FLAGMAN AS REQUIRED. REFER TO THE CONTRACT SPECIFICATIONS REGARDING RESTRICTIONS FOR PERFORMANCE WORK NEAR ACTIVE RAIL LINES.
8. RESTRAINING RAILS ARE NOT SHOWN ON TYPICAL SECTIONS FOR CLARITY. SEE TRACK CHARTS AND TRACK DETAILS FOR LOCATION AND DETAILS.

Jan, 18 2016 10:08 am v:\3400_ADC\CAD\00_EAST\PLANSHEETS\TRACK\E0-TRK-NTS.dwg By: V-RasulL

NO.	DATE	BY	CHECK	DESIGN	REVISION / SUBMITTAL

AECOM

90% SUBMISSION - 01/22/16

METROPOLITAN COUNCIL

SOUTHWEST Green Line LRT Extension

CIVIL - VOLUME 3B
TRACK
TRACK NOTES
SHEET 1

DISCIPLINE: TRACK

SHEET NAME: E0-TRK-NTS-001

SHEET 8 OF 420

SOIL CORRECTION TABLE FOR LRT (TABLE 1 OF 4)

BORING NO		COORDINATES		STATIONING	GROUND	GWL	TOR	TOS	TOS	LIMITING SUBGRADE SOIL	SUBCUT REQUIRED*	SUBCUT ELEVATION*	SELECT SUBBASE REQUIRED
		NORTH	EAST		ELEVATION	ELEVATION	ELEVATION	ELEVATION	DEPTH**				
1199	ST	146897	492214	2500+63	916.1	<898.1	914.6	911.7	−4.4	SC/CL	6.4	909.7	2
1099	ST	146989	492435	2503+02	917.5	<896.5	915.8	912.9	−4.6	SP−SM	4.6	912.9	0
1198	ST	147082	492729	2506+09	920.7	<909.2	920.2	917.3	−3.4	SP−SM	3.4	917.3	0
1098	ST	147197	492998	2509+02	922.5		923.5	920.6	−1.9	SC	2.5	920.0	0.6
1197	SS	147234	493146	2510+54	924.1	<903.1	923.8	920.9	−3.2	SM	4.2	919.9	1
1196	SS	147321	493382	2513+06	924.2	<907.7	924.2	921.3	−2.9	SM	3.9	920.3	1
1097	ST	147401	493569	2515+09	923.3	905.0	924.6	921.7	−1.6	SC/CL	3.6	919.7	2
1195	ST	147527	493948	2519+08	924.0	<907.5	922.3	919.4	−4.6	SP−SM	4.6	919.4	0
1096	ST	147592	494140	2521+11	923.2	907.8	920.9	918.0	−5.2	SC/CL	7.2	916.0	2
1194	ST	147674	494365	2523+51	922.5	<911.0	921.4	918.5	−4.0	SC w/org	6.5	916.0	2
1095	ST	147799	494703	2527+11	923.0	905.8	922.3	919.4	−3.6	SC	4	919.0	0.4
1193	ST	147915	495015	2530+44	922.1	903.7	923.0	920.1	−2.0	SP−SM	2	920.1	0
1094	ST	148035	495245	2533+01	921.9	903.8	923.6	920.7	−1.2	SM	2.2	919.7	1
1192	ST	148101	495438	2535+05	922.3	902.8	923.2	920.3	−2.0	SM/CL	4	918.3	2
1093	ST	148263	495776	2538+83	921.8	906.0	922.5	919.6	−2.2	SC	3.2	918.6	1
1296	SW	148274	495995	2540+85	921.9	906.4	924.4	921.5	−0.4	SM	1.4	920.5	1
1200	SW	148374	496025	2541+56	921.9	906.9	926.0	923.1	1.2	CL/SM	0.5	921.4	1
1091	ST	149310	497970	2563+15	925.4	<908.4	928.0	925.1	−0.3	SM	1.3	924.1	1
1298	SW	149336	498059	2563+99	925.0	902.6	931.7	928.8	3.8	SM	0	925.0	1
1299	SW	149406	498195	2565+59	925.0	901.2	927.6	924.7	−0.3	SM	1.3	923.7	1
1185	ST	149372	498302	2566+41	925.5	<904.5	926.4	923.5	−2.0	SP	2	923.5	0
1377	SD	149475	498320	2567+02	924.6	902.6	925.9	923.0	−1.6	SM	0.4	924.2	1
1090	ST	149569	498519	2569+22	924.3	901.8	924.9	922.0	−2.3	SC/CL	4.3	920.0	2
1378	SD	149644	498691	2571+07	923.0	<899	924.0	921.1	−1.9	SM	2.9	920.1	1
1184	ST	149621	498798	2571+97	922.4	902.4	923.6	920.7	−1.7	SM	2.7	919.7	1
1089	SS	149826	499056	2575+18	921.6	<904.6	922.1	919.2	−2.4	SP−SM	2.4	919.2	0
1183	SS	149878	499343	2577+99	919.5	<898.5	920.7	917.8	−1.7	SM	2.7	916.8	1
1070	ST	149985	499317	2578+22	920.0	896.7	920.6	917.7	−2.3	SM/CL	4.3	915.7	2
1343	SR	149871	499422	2578+67	919.9	<898.9	920.4	917.5	−2.4	SC	3.4	916.5	1
1300	SW	149947	499508	2579+78	917.6	896.7	919.9	917.0	−0.6	SP−SM	0.6	917.0	0
1069	ST	150073	499512	2580+37	918.0	896.8	919.6	916.7	−1.3	SM	2.3	915.7	1
1182	ST	150137	499886	2584+00	916.1	898.1	917.9	915.0	−1.1	SM	2.1	914.0	1
1088	ST	150355	500128	2587+13	916.2	897.8	916.4	913.5	−2.7	SC	3.7	912.5	1
1181	ST	150383	500396	2589+62	913	897.4	915.2	912.3	−0.7	SM	1.7	911.3	1
1329	STP	150502	500686	2595+33	911.6	891.5	913.7	910.8	−0.8	SM	1.8	909.8	1
1087	ST	150619	500689	2595+96	913.7	894.7	913.5	910.6	−3.1	SP−SM	3.1	910.6	0
1301	SW	150678	500776	2596+90	913.1	894.8	913.0	910.1	−3.0	SP−SM/CL	4	909.1	1
1302	SW	150750	500921	2598+52	912.6	891.6	912.7	909.8	−2.8	SP−SM	2.8	909.8	0
1180	ST	150719	501007	2599+16	910.7	894.1	912.7	909.8	−1.0	SM	2	908.7	1
1303	SW	150811	501049	2599+94	912.6	891.9	912.6	909.7	−3.0	SP−SM	3	909.6	0
1009	SB	150872	501210	2601+65	912.8	889.5	912.3	909.4	−3.4	SM	4.4	908.4	1
1260	SB	150873	501319	2602+64	910.1	893.2	912.2	909.3	−0.8	SP−SM/SM	1.8	908.3	1
1261	SB	150910	501389	2603+43	910.1	893.1	912.1	909.2	−0.9	SP−SM/SC	1.9	908.2	1
1010	SB	150994	501471	2604+53	912.9	888.7	912.0	909.1	−3.8	SP−SM	3.8	909.1	0
1086	ST	151132	501758	2607+72	914.2	<892.7	911.6	908.7	−5.5	SP−SM	5.5	908.7	0
1179	ST	151181	502045	2610+52	910	<889.0	911.2	908.3	−1.7	SM/SP−SM	2	908.0	0.3
1085	ST	151391	502294	2613+67	913.1	<891.6	910.8	907.9	−5.2	GP/SP	5.2	907.9	0
1178	ST	151479	502652	2617+28	907.1	887.0	910.4	907.5	0.4	SC	0.6	906.5	1
1084	ST	151652	502842	2619+74	911.5	<890.0	910.1	907.2	−4.3	SP−SM	4.3	907.2	0
1177	ST	151779	503176	2623+30	905.9	885.6	909.2	906.3	0.4	SM	0.6	905.3	1
1083	ST	151913	503390	2625+81	910.1	<890.6	907.5	904.6	−5.5	SP−SM	5.5	904.6	0
1176	ST	151996	503628	2628+31	904.9	886.6	908.2	905.3	0.4	SP−SM	0	904.9	

NOTES:
- GWL – GROUND WATER LEVEL
- TOR – TOP OF RAIL
- TOS – TOP OF SUBGRADE
- ALL UNITS ARE IN FEET.
- * BORING SPECIFIC CASE
- ** BELOW EXISTING GROUND

NO.	DATE	BY	CHECK	DESIGN	REVISION / SUBMITTAL

AECOM

90% SUBMISSION - 01/22/16

METROPOLITAN COUNCIL

SOUTHWEST Green Line LRT Extension

CIVIL - VOLUME 3B
TRACK
SOIL CORRECTION TABLE
SHEET 1

DISCIPLINE: TRACK

SHEET NAME: E0-TRK-NTS-002

SHEET 9 OF 420

Jan, 18 2016 10:09 am V:\3400_ADC\CAD\00_EAST\PLANSHEETS\TRACK\E0-TRK-NTS.dwg By: V-RasulL

SOIL CORRECTION TABLE FOR LRT (TABLE 2 OF 4)

BORING NO		COORDINATES		STATIONING	GROUND	GWL	TOR	TOS	TOS	LIMITING SUBGRADE SOIL	SUBCUT REQUIRED*	SUBCUT ELEVATION*	SELECT SUBBASE REQUIRED
		NORTH	EAST		ELEVATION	ELEVATION	ELEVATION	ELEVATION	DEPTH**				
1304	SW	152092	503767	2629+95	908.5	884.3	910.1	907.2	-1.3	SM	2.3	906.2	1
LOUISIANA PILE SUPPORTED EMBANKMENT AREA													
1220	SS	152357	504654	2639+36	891.7	883.1	895.5	892.6	0.9	Peat	12.2	879.5	13.1
1221	SU	152515	504907	2642+14	893.7	881.9	894.5	891.6	-2.1	Peat	21.7	872.0	19.6
1216	SB	152593	505051	2643+78	894.7	883.0	894.1	891.2	-3.5	Peat	11.7	883.0	8.2
1217	SB	152591	505270	2645+61	896.3	882.7	897.8	894.9	-1.4	SM	2.4	893.9	1
1080	ST	152946	505541	2649+86	913.5	<892.0	907.9	905.0	-8.5	SP	8.5	905.0	0
3012	SW	152874	505610	2650+07	907.0	880.3	908.3	905.4	-1.6	SM	2	905.0	0.4
1366	SB	152956	505565	2650+14	913.9	880.6	908.5	905.6	-8.3	SP	8.3	905.6	0
3013	SW	152950	505742	2651+59	908.6	880.5	911.4	908.5	-0.1	SM	1.1	907.5	1
1175	ST	153022	505912	2653+43	912.3	<891.3	913.3	910.4	-1.9	SP-SM	1.9	910.4	0
3014	SW	153111	506093	2655+47	914	879.8	914.5	911.6	-2.4	SC	3.4	910.6	1
1079	ST	153205	506088	2655+82	915.2	<893.7	914.7	911.8	-3.4	SP-SM	3.4	911.8	0
3015	SW	153177	506223	2656+92	914.2	879.8	915.3	912.4	-1.8	SM	2.8	911.4	1
1174	ST	153260	506402	2658+89	915	<894.0	916.5	913.6	-1.4	SC	2.4	912.6	1
1078	ST	153465	506624	2661+78	918.1	<896.6	917.2	914.3	-3.8	CL	5.8	912.3	2
3007	SW	153560	506786	2663+62	917.1	<881.1	917.7	914.8	-2.4	SP	2.4	914.7	0
1173	ST	153523	506916	2664+66	916.6	<895.6	917.6	914.7	-1.9	CL	4	912.6	2
3006	SW	153668	506940	2665+46	916.1	<880.1	917.5	914.6	-1.5	SC	2.5	913.6	1
3005	SW	153717	507097	2667+14	917.8	<881.8	917.3	914.4	-3.4	CL	5.4	912.4	2
1068	SS	153779	507262	2668+89	917.2	<885.7	917.0	914.1	-3.1	SP	3.1	914.1	0
1256	SS	153746	508398	2669+98	914.9	<888.9	916.8	913.9	-1.0	SC	2	912.9	1
1067	SS	153878	507486	2671+34	915.6	<884.1	916.6	913.7	-1.9	SP-SM	2	913.6	0
1390	SS	153820	507543	2671+61	913.5	<882.5	916.6	913.7	0.2	SM	0.8	912.7	1
3003	SW	153942	507582	2672+49	912.9	<876.9	916.4	913.5	0.6	SM	0.4	912.5	1
1077	ST	154004	507731	2674+14	913.2	<891.7	916.2	913.3	0.1	SC/w org	2	911.2	2
1172	ST	154041	507997	2676+65	911.5	890.5	915.0	912.1	0.6	SM/SC	1.6	909.9	1
1379	SD	154153	507983	2677+02	911.2	<890.2	914.8	911.9	0.7	SM	0.3	910.9	1
3008	SB	154040	508077	2677+38	910.6	878.6	914.6	911.7	1.1	SM	0	910.6	1
3010	SB	154191	508072	2677+99	911.0	880.2	914.2	911.3	0.3	SM	0.7	910.3	1
3009	SB	154088	508192	2678+62	911.0	878.5	913.8	910.9	-0.1	SM	1.1	909.9	1
3011	SB	154240	508196	2679+32	911.2	876.8	913.4	910.5	-0.7	SM	1.7	909.5	1
1076	ST	154248	508243	2679+77	911.8	<890.3	913.1	910.2	-1.6	SC	2.6	909.2	1
1171	ST	154307	508552	2682+81	909	<888.0	911.5	908.4	-0.6	CL/SM	2	907.0	1
1380	SD	154467	508607	2684+00	909.9	<878.9	910.6	907.7	-2.3	SP-SM/SC	3.3	906.6	1
1075	ST	154516	508775	2685+72	909.4	<887.9	910.3	907.4	-2.0	CL	4	905.4	2
1074	ST	154785	509326	2691+86	904.1	<882.6	906.3	903.4	-0.7	SP-SM	0.7	903.4	0
1330	STP	154736	509544	2693+62	900.1	871.7	903.3	900.4	0.3	SM	0.7	899.4	1
1170	ST	154815	509657	2694+97	900.9	<879.9	901.9	899.0	-1.9	SM	2.9	898.0	1
1073	ST	155027	509876	2697+86	898.6	<877.1	899.6	896.7	-1.9	SP-SM	1.9	896.7	0
1169	ST	155064	510199	2700+93	896.6	<877.6	897.2	894.3	-2.3	SP	2.3	894.3	0
1072	ST	155298	510407	2703+82	894.2	875.0	894.9	892.0	-2.2	SP-SM	2.2	892.0	0
1168	ST	155389	510728	2707+10	890.9	874.2	892.3	889.4	-1.5	SM	2	888.9	0.5
1071	ST	155534	510922	2709+45	889.8	873.7	890.6	887.7	-2.1	SM	3.1	886.7	1
1311	SB	155579	511001	2710+39	890.1	873.1	889.9	887.0	-3.1	SM	4.1	886.0	1
1349	SR	155618	511171	2712+10	888.8	872.6	888.6	885.7	-3.1	SM	4.1	884.7	1
1391	SS	155650	511239	2712+86	886.9	877.1	888.1	885.2	-1.7	SM	2.7	884.2	1
1066	SS	155683	511229	2712+90	887.9	873.8	888.0	885.1	-2.8	SP-SM	2.8	885.1	0
1227	SW	155737	511331	2714+04	886.9	879.5	887.2	884.3	-2.6	SM	3.6	883.3	1
1257	SS	155692	511355	2714+07	886.2	876.0	887.2	884.3	-2.0	SM/SP-SM	3	883.2	1
1065	SS	155787	511450	2715+34	886.9	873.3	886.2	883.3	-3.6	SP-SM	3.6	883.3	0
1392	SS	155746	511490	2715+53	886.1	872.0	886.1	883.2	-2.9	SP-SM	2.9	883.2	0

NOTES:
- GWL – GROUND WATER LEVEL
- TOR – TOP OF RAIL
- TOS – TOP OF SUBGRADE
- ALL UNITS ARE IN FEET.
- * BORING SPECIFIC CASE
- ** BELOW EXISTING GROUND

NO.	DATE	BY	CHECK	DESIGN	REVISION / SUBMITTAL

AECOM

90% SUBMISSION - 01/22/16

METROPOLITAN COUNCIL

SOUTHWEST Green Line LRT Extension

CIVIL - VOLUME 3B
TRACK
SOIL CORRECTION TABLE
SHEET 2

DISCIPLINE: TRACK

SHEET NAME: E0-TRK-NTS-003

SHEET 10 OF 420

Jan, 18 2016 10:09 am V:\3400_ADC\CAD\00_EAST\PLANSHEETS\TRACK\E0-TRK-NTS.dwg By: V-RasulL

SOIL CORRECTION TABLE FOR LRT (TABLE 3 OF 4)

BORING NO		COORDINATES		STATIONING	GROUND	GWL	TOR	TOS	TOS	LIMITING SUBGRADE SOIL	SUBCUT REQUIRED*	SUBCUT ELEVATION*	SELECT SUBBASE REQUIRED
		NORTH	EAST		ELEVATION	ELEVATION	ELEVATION	ELEVATION	DEPTH**				
1263	SB	155750	511696	2717+40	884.9	872.8	886.2	883.3	−1.6	SP−SM/SM	2.6	882.3	1
1167	ST	155888	511697	2718+01	886.4	873.9	886.8	883.9	−2.5	SP	2.5	883.9	0
1232	SB	155935	511798	2719+12	885.6	869.4	887.9	885.0	−0.6	ML	2.6	883.0	2
1312	SB	155934	511893	2719+97	886.2	872.4	888.4	885.5	−0.7	SM	1.7	884.5	1
1166	ST	155893	512029	2721+07	884.3	871.6	888.9	886.0	1.7	SM	0	884.3	1
1262	ST	155950	512188	2722+76	884.7	873.0	889.7	886.8	2.1	SP−SM	0	884.7	0
1235	SB	156089	512229	2723+65	886.5	870.0	890.1	887.2	0.7	SP−SM	0	886.5	0
1064	ST	156005	512344	2724+41	884.9	874.9	890.4	887.5	2.6	SP−SM	0	884.9	0
1236	SB	156052	512391	2725+02	886.1	869.6	890.6	887.7	1.6	SP−SM/SM	0	886.1	1
1063	ST	156111	512626	2727+48	887.6	872.4	889.8	886.9	−0.7	SP−SM	0.7	886.9	0
1238	SB	156173	512701	2728+39	888.4	872.1	889.3	886.4	−2.0	SP−SM/SM	3	885.4	1
1062	ST	156191	512914	2730+54	887.8	871.2	888.3	885.4	−2.4	SP	2.4	885.4	0
1061	ST	156234	513217	2733+65	886.4	872.0	886.7	883.8	−2.6	SP	2.6	883.8	0
1363	STP	156234	513314	2734+64	885.2	868.9	886.2	883.3	−1.9	SP	1.9	883.3	0
1060	ST	156247	513526	2747+24	883.1	874.1	885.1	882.2	−0.9	SM/SP−SM	1.9	881.2	1
1059	ST	156251	513819	2750+15	881.1	870.8	883.7	880.8	−0.3	SP−SM	0.3	880.8	0
1058	ST	156311	514139	2753+34	880.6	875.5	882.1	879.2	−1.4	SP−SM	1.4	879.2	0
1057	ST	156419	514437	2756+46	879.4	874.2	880.5	877.6	−1.8	SP−SM	2	877.4	0
1056	ST	156538	514696	2759+26	877.9	868.1	879.1	876.2	−1.7	SP−SM/SM	2.7	875.2	1
1055	ST	156748	514956	2762+55	876.4	868.2	877.5	874.6	−1.8	SM	2.8	873.6	1
1054	SS	156948	515165	2765+43	875.7	863.4	876.0	873.1	−2.6	SM	3	872.7	0.4
1228	SS	157076	515260	2767+01	874.5	861.1	875.25	872.4	−2.1	SM	3.1	871.4	1
1053	SS	157230	515403	2769+11	875.0	861.4	874.2	871.3	−3.7	SM	4.7	870.3	1
1229	SV	157322	515455	2770+13	872.8	856.2	873.66	870.8	−2.0	SM	3	869.8	1
1230	SV	157440	515584	2771+88	873.0	856.8	871.53	868.6	−4.4	SP	4.4	868.6	0
1157	ST	157443	515596	2772+05	873.1	854.4	871.00	868.1	−5.0	SP−SM	5	868.1	0
KENILWORTH TUNNEL SEGMENT													
1042	ST	159822	517172	2800+82	869.0	854.5	865.4	862.5	−6.5	Peat	19.5	849.5	13.9
1005	SB	159918	517230	2801+92	869.1	848.0	869.0	866.1	−3.0	SM	4	865.1	1
1006	SB	160002	517289	2802+95	868.4	847.4	870.1	867.2	−1.2	SM	2.2	866.2	1
1040	ST	160056	517377	2803+92	867.9	849.6	869.9	867.0	−0.9	SM	1.9	866.0	1
1323	SW	160148	517372	2804+61	866.5	850.4	869.8	866.9	0.4	SM	0.6	865.9	1
1152	ST	160223	517507	2805+99	867.9	852.5	869.4	866.5	−1.4	SC w/org	2	865.9	1
1039	ST	160365	517597	2807+62	867	851.9	869.0	866.1	−0.9	SM	1.9	865.1	1
1041	ST	160602	517682	2810+05	865.9	850.5	868.4	865.5	−0.4	SM	1.4	864.5	1
1143	ST	160773	517726	2811+77	866.2	851.3	868.0	865.1	−1.1	SC	2.1	864.1	1
1038	ST	160950	517746	2813+55	865.4	850.6	867.5	864.6	−0.8	SP−SM	0.8	864.6	0
1037	ST	161199	517768	2816+04	864.9	850.1	866.9	864.0	−0.9	SP−SM	1.2	863.7	0
1151	ST	161335	517782	2817+40	865.3	851.0	866.6	863.7	−1.6	SM	2	863.3	0.4
1325	SW	161427	517863	2818+42	864.2	856.4	866.3	863.4	−0.8	SP−SM	0.8	863.4	0
1036	ST	161477	517791	2818+83	863.8	857.7	866.3	863.4	−0.4	SM	1.4	862.4	1
1150	ST	161728	517802	2821+35	864.8	852.1	866.7	863.8	−1.0	SP−SM	1	863.8	0
1035	SS	161795	517801	2822+02	865.3	852.1	866.8	863.9	−1.4	SM	2.5	862.8	1
1034	SS	161983	517802	2823+90	867.2	849.8	867.2	864.3	−2.9	CL	4.9	862.3	2
1033	SS	162087	517794	2824+94	867.8	849.6	867.4	864.5	−3.3	SM	4	863.8	0.7
1326	SW	162152	517787	2825+59	868.5	850.4	867.7	864.8	−3.7	SM	4.7	863.8	1
1327	SW	162202	517793	2826+09	868.4	850.4	868.2	865.3	−3.1	SM	4.1	864.3	1
1144	ST	162372	517829	2827+80	868.9	850.7	870.6	867.7	−1.2	SP−SM	1.2	867.7	0
1032	ST	162437	517806	2828+47	868.7	858.1	871.2	868.3	−0.4	SM	1	867.7	0.6
1031	ST	162662	517844	2830+84	868.1	849.0	870.5	867.6	−0.5	SM	1.5	866.6	1
1149	ST	162761	517891	2831+96	867.4	850.3	869.8	866.9	−0.5	SM	1.5	865.9	1
1030	ST	162989	517973	2834+37	866.5	–	868.4	865.5	−1.0	SM/w org	3	863.5	2

NOTES:
- GWL – GROUND WATER LEVEL
- TOR – TOP OF RAIL
- TOS – TOP OF SUBGRADE
- ALL UNITS ARE IN FEET.
- * BORING SPECIFIC CASE
- ** BELOW EXISTING GROUND

NO.	DATE	BY	CHECK	DESIGN	REVISION / SUBMITTAL

AECOM

90% SUBMISSION - 01/22/16

METROPOLITAN COUNCIL

SOUTHWEST Green Line LRT Extension

CIVIL - VOLUME 3B
TRACK
SOIL CORRECTION TABLE
SHEET 3

DISCIPLINE: TRACK

SHEET NAME: E0-TRK-NTS-004

SHEET 11 OF 420

Jan, 18 2016 10:09 am V:\3400_ADC\CAD\00_EAST\PLANSHEETS\TRACK\E0-TRK-NTS.dwg By: V-RasulL

SOIL CORRECTION TABLE FOR LRT (TABLE 4 OF 4)

BORING NO		COORDINATES		STATIONING	GROUND	GWL	TOR	TOS	TOS	LIMITING SUBGRADE SOIL	SUBCUT REQUIRED*	SUBCUT ELEVATION*	SELECT SUBBASE REQUIRED
		NORTH	EAST		ELEVATION	ELEVATION	ELEVATION	ELEVATION	DEPTH**				
1148	ST	163206	518072	2836+75	864.6	849.8	867.0	864.1	-0.5	SM/w org	2.5	862.1	2
1029	ST	163283	518113	2840+63	864.2	<851.2	866.5	863.6	-0.6	SM	1.6	862.6	1
1331	STP	163326	518274	2841+73	862	848.6	865.9	863.0	1.0	SM	0	862.0	1
1028	ST	163567	518264	2843+84	861.4	849.2	864.7	861.8	0.4	SM/w org	1.6	859.8	2
1027	ST	163818	518433	2846+85	859.6	848.6	862.9	860.0	0.4	SM/w org	1.6	858.0	2
1026	ST	164067	518634	2850+04	857.7	846.7	861.1	858.2	0.5	peat	4	853.7	2
1376	ST	164187	518763	2851+77	855.4	846.9	860.1	857.2	1.8	SM	2	853.4	1
1025	ST	164308	518911	2853+70	854.7	849.7	858.2	855.3	0.6	SM	0.4	854.3	1
1375	SS	164415	519040	2855+34	855.8	846.8	856.4	853.5	-2.3	Peat	6.3	849.5	4
1020	SB	164578	519252	2858+02	854.9	-	855.0	852.1	-2.8	SC w/org	4.8	850.1	2
1250	SV	164619	519336	2858+95	853.3	847.7	854.6	851.7	-1.6	SC w/org	2	851.3	0.4
1044	ST	164681	519533	2861+00	851.0	841.2	853.2	850.3	-0.7	SP-SM	0.7	850.3	0
1251	ST	164787	519705	2863+01	850.5	839.0	851.4	848.5	-2.0	SP-SM	2	848.5	0
1045	ST	164915	519941	2865+67	847.2	838.4	849.1	846.2	-1.0	SM	2	845.2	1
1254	ST	164981	520225	2868+55	846.4	837.6	846.5	843.6	-2.8	SM	3.8	842.6	1
1255	ST	165163	520702	2873+66	841.2	828.1	842.0	839.1	-2.1	SP-SM	2.1	839.1	0
1115	ST	165292	520917	2876+19	836.9	823.8	840.8	837.9	1.0	SM	0	836.9	1
1332	STP	165316	521039	2877+37	836.2	-	840.1	837.2	1.0	SM	0	836.2	1
1116	ST	165430	521130	2879+79	834.9	823.9	838.7	835.8	0.9	SM	0.1	834.8	1
1117	ST	165630	521356	2881+85	831.7	812.8	835.7	832.8	1.0	SM	0	831.7	1
1118	ST	165827	521576	2884+80	829.3	812.7	832.7	829.8	0.5	SM	0.5	828.8	1
1119	ST	166037	521794	2887+83	825.7	812.2	829.7	826.8	1.1	SM	0	825.7	1
1120	ST	166265	522025	2891+07	823.8	808.6	826.4	823.5	-0.3	SM	1.3	822.5	1
1121	ST	166425	522232	2893+67	822.4	805.5	823.8	820.9	-1.5	SM	2	820.4	1
1122	ST	166659	522450	2896+86	819.3	805.1	818.1	815.2	-4.1	CL	6.1	813.2	2
1275	SB	166685	522520	2897+56	818.7	812.2	817.6	814.7	-4.0	CL	6	812.7	2
1276	SB	166677	522674	2898+63	818.5	809.6	817.4	814.5	-4.0	SC	5	813.5	1
1123	SS	166850	522656	2899+68	818.1	814.1	817.2	814.3	-3.8	CH	5.8	812.3	2
1360	SR	166863	522868	2901+31	820.7	811.9	816.9	814.0	-6.7	SP-SM	6.7	814.0	0
40	SB	166928	522761	2900+98	817.6	-	817.7	814.8	-2.8	CL	4.8	812.8	2
1124	ST	167038	522892	2902+69	817.8	798.8	817.3	814.4	-3.4	CH	5.4	812.4	2
1125	ST	167231	523126	2905+68	818.0	811.8	820.2	817.3	-0.7	SP-SM	0.7	817.3	0
1126	ST	167378	523383	2908+60	818.9	800.9	823.0	820.1	1.2	SM	0	818.9	1
1127	ST	167506	523657	2911+61	821.7	<805.2	825.4	822.5	0.8	SC	0.2	821.5	1
1128	ST	167628	523924	2914+54	822.1	<810.1	826.4	823.5	1.4	SM	0	822.1	1
1129	ST	167789	524223	2917+93	822.6	<808.1	825.8	822.9	0.3	SM	0	822.6	1
1130	ST	167899	524513	2921+04	822.4	815.1	824.1	821.2	-1.2	SC	2.2	820.2	1
1134	SW	168125	524955	2925+99	821.8	816.9	823.0	820.1	-1.7	SM w/org	3.7	818.1	2
1008	SB	168850	526064	2939+98	849.8	<825.8	851.4	848.5	-1.3	SC/CL	3.3	846.5	2
1101	ST	169074	525926	2942+75	844.8	<828.8	844.8	841.9	-2.9	SP-SM	2.9	841.9	0
1102	SS	169267	525922	2944+47	844.5	<823.5	843.4	840.5	-4.0	SP-SM	4	840.5	0
1103	SS	169543	525927	2947+23	842.6	<823.1	841.4	838.5	-4.1	SP-SM	4.1	838.5	0
1316	SW	169685	525975	2948+68	837.7	796.8	842.2	839.3	1.6	SM	0	837.7	0

NOTES:
- GWL – GROUND WATER LEVEL
- TOR – TOP OF RAIL
- TOS – TOP OF SUBGRADE
- ALL UNITS ARE IN FEET.
- * BORING SPECIFIC CASE
- ** BELOW EXISTING GROUND

NO.	DATE	BY	CHECK	DESIGN	REVISION / SUBMITTAL

AECOM

90% SUBMISSION - 01/22/16

METROPOLITAN COUNCIL

SOUTHWEST Green Line LRT Extension

CIVIL - VOLUME 3B
TRACK
SOIL CORRECTION TABLE
SHEET 4

DISCIPLINE: TRACK

SHEET NAME: E0-TRK-NTS-005

SHEET 12 OF 420

Jan, 18 2016 10:10 am V:\3400_ADC\CAD\00_EAST\PLANSHEETS\TRACK\E0-TRK-NTS.dwg By: V-RasulL

TRACK 2 ALIGNMENT

DESCRIPTION	POINT DESC.	STATIONING	COORDINATES		SPIRAL AND CURVE DATA / EQUATIONS				TANGENT	
			NORTHING	EASTING					DISTANCE	BEARING
TIE IN	BP	2496+00.21	146723.4739	491784.8605						
TRACK AHEAD									593.79'	N 70° 04' 00'' E
CURVE E1-200	TS	2501+94.00	146925.9139	492343.0769	Ls1 =	90.00'				
	SC	2502+84.00	146956.3758	492427.7648	I =	02° 00' 00'' RT	Ea =	0.75''		
	PI	2503+39.02	146975.3548	492479.4072	Rc =	5730.00'	Eu =	1.34''		
	CS	2503+94.01	146992.0717	492531.8257	Lc =	110.01'	V =	55 MPH		
	ST	2504+84.01	147020.0077	492617.3800	Ls2 =	90.00'				
TRACK AHEAD									179.17'	N 72° 04' 00'' E
CURVE E1-201	TS	2506+63.18	147075.1756	492787.8426	Ls1 =	90.00'				
	SC	2507+53.18	147103.1116	492873.3969	I =	02° 00' 00'' LT	Ea =	0.75''		
	PI	2508+08.20	147119.8285	492925.8154	Rc =	5730.00'	Eu =	1.34''		
	CS	2508+63.19	147138.8075	492977.4578	Lc =	110.01'	V =	55 MPH		
	ST	2509+53.19	147169.2694	493062.1457	Ls2 =	90.00'				
TRACK AHEAD									469.00'	N 72° 04' 00'' E
CURVE E1-202	TS	2514+22.19	147329.1647	493503.0475	Ls1 =	50.00'				
	SC	2514+72.19	147346.3416	493550.0043	I =	03° 00' 00'' LT	Ea =	1.00''		
	PI	2515+25.75	147364.4708	493600.4019	Rc =	3000.00'	Eu =	1.11''		
	CS	2515+79.27	147385.4686	493649.6733	Lc =	107.08'	V =	40 MPH		
	ST	2516+29.27	147404.8236	493695.7750	Ls2 =	50.00'				
TRACK AHEAD									105.77'	N 67° 04' 00'' E
CURVE E1-203	TS	2517+35.04	147446.0362	493793.1803	Ls1 =	50.00'				
	SC	2517+85.04	147465.3913	493839.2821	I =	03° 00' 00'' RT	Ea =	1.00''		
	PI	2518+38.60	147486.3890	493888.5535	Rc =	3000.00'	Eu =	1.11''		
	CS	2518+92.12	147504.5182	493938.9511	Lc =	107.08'	V =	40 MPH		
	ST	2519+42.12	147521.6951	493985.9078	Ls2 =	50.00'				
TRACK AHEAD									241.57'	N 70° 04' 00'' E
CURVE E1-204	TS	2521+83.69	147604.0521	494213.0023	Ls1 =	110.00'				
	SC	2522+93.69	147641.7647	494316.3354	I =	01° 31' 43'' LT	Ea =	0.50''		
	PI	2523+58.74	147663.7348	494377.5738	Rc =	9000.00'	Eu =	1.36''		
	CS	2524+23.79	147687.7476	494438.0404	Lc =	130.10'	V =	65 MPH		
	ST	2525+33.79	147727.7862	494540.4946	Ls2 =	110.00'				
TRACK AHEAD									392.58'	N 68° 32' 17'' E
CURVE E1-205	TS	2529+26.37	147871.4254	494905.8549	Ls1 =	100.00'				
	SC	2530+26.37	147907.8245	494998.9949	I =	01° 23' 58'' RT	Ea =	0.75''		
	PI	2530+76.52	147926.3635	495045.5950	Rc =	8200.00'	Eu =	1.29''		
	CS	2531+26.66	147943.3769	495092.7734	Lc =	100.29'	V =	65 MPH		
	ST	2532+26.66	147977.8722	495186.6353	Ls2 =	100.00'				
TRACK AHEAD									181.18'	N 69° 56' 15'' E
CURVE E1-206	TS	2534+07.84	148040.0234	495356.8166	Ls1 =	160.00'				
	SC	2535+67.84	148095.9102	495506.7357	I =	05° 43' 02'' LT	Ea =	2.25''		
	PI	2536+87.59	148135.9903	495619.5915	Rc =	4000.00'	Eu =	1.93''		
	CS	2538+06.98	148189.0346	495726.9652	Lc =	239.14'	V =	65 MPH		
	ST	2539+66.98	148257.6576	495871.4989	Ls2 =	160.00'				
TRACK AHEAD									510.36'	N 64° 13' 13'' E

DESCRIPTION	POINT DESC.	STATIONING	COORDINATES		SPIRAL AND CURVE DATA / EQUATIONS				TANGENT	
			NORTHING	EASTING					DISTANCE	BEARING
CURVE E1-207	TS	2544+77.34	148479.6201	496331.0635	Ls1 =	80.00'				
	SC	2545+57.34	148514.5091	496403.0549	I =	01° 19' 13'' LT	Ea =	0.00''		
	PI	2546+32.72	148547.1947	496470.9742	Rc =	10014.00'	Eu =	1.20''		
	CS	2547+08.08	148581.6262	496538.0254	Lc =	150.74'	V =	55 MPH		
	ST	2547+88.08	148617.9749	496609.2908	Ls2 =	80.00'				
TRACK AHEAD									299.45'	N 62° 54' 00'' E
CURVE E1-208	TS	2550+87.54	148754.3899	496875.8690	Ls1 =	120.00'				
	SC	2552+07.54	148808.5199	496982.9654	I =	04° 30' 00'' RT	Ea =	1.25''		
	PI	2553+04.70	148853.3187	497069.1928	Rc =	4000.00'	Eu =	1.75''		
	CS	2554+01.69	148890.1062	497159.1304	Lc =	194.16'	V =	55 MPH		
	ST	2555+21.69	148936.7745	497269.6825	Ls2 =	120.00'				
TRACK AHEAD									172.40'	N 67° 24' 00'' E
CURVE E1-209	TS	2556+94.10	149003.0279	497428.8461	Ls1 =	90.00'				
	SC	2557+84.10	149037.8215	497511.8483	I =	03° 00' 00'' LT	Ea =	0.50''		
	PI	2558+96.58	149080.8414	497615.7810	Rc =	6014.00'	Eu =	1.49''		
	CS	2560+08.99	149129.6465	497717.1257	Lc =	224.89'	V =	55 MPH		
	ST	2560+98.99	149168.3316	497798.3872	Ls2 =	90.00'				
TRACK AHEAD									814.99'	N 64° 24' 00'' E
CURVE E1-210	TS	2569+13.97	149520.4754	498533.3679	Ls1 =	50.00'				
	SC	2569+63.97	149541.9542	498578.5192	I =	03° 00' 00'' RT	Ea =	1.00''		
	PI	2570+17.53	149565.2216	498626.7604	Rc =	3000.00'	Eu =	1.11''		
	CS	2570+71.05	149585.6758	498676.2600	Lc =	107.08'	V =	40 MPH		
	ST	2571+21.05	149605.0187	498722.3668	Ls2 =	50.00'				
TRACK AHEAD									105.77'	N 67° 24' 00'' E
CURVE E1-211	TS	2572+26.82	149645.6637	498820.0103	Ls1 =	50.00'				
	SC	2572+76.82	149665.0066	498866.1171	I =	03° 00' 00'' LT	Ea =	1.00''		
	PI	2573+30.38	149685.4608	498915.6167	Rc =	3000.00'	Eu =	1.11''		
	CS	2573+83.90	149708.7281	498963.8579	Lc =	107.08'	V =	40 MPH		
	ST	2574+33.90	149730.2070	499009.0092	Ls2 =	50.00'				
TRACK AHEAD									540.00'	N 64° 24' 00'' E
CURVE E1-212	TS	2579+73.90	149963.5333	499495.9988	Ls1 =	50.00'				
	SC	2580+23.90	149985.2627	499541.0301	I =	03° 00' 00'' LT	Ea =	1.00''		
	PI	2580+77.46	150008.2795	499589.3913	Rc =	3000.00'	Eu =	1.11''		
	CS	2581+30.98	150034.0397	499636.3487	Lc =	107.08'	V =	40 MPH		
	ST	2581+80.98	150057.8522	499680.3140	Ls2 =	50.00'				
TRACK AHEAD									105.77'	N 61° 24' 00'' E
CURVE E1-213	TS	2582+86.74	150108.4811	499773.1740	Ls1 =	50.00'				
	SC	2583+36.74	150132.2936	499817.1393	I =	03° 00' 00'' RT	Ea =	1.00''		
	PI	2583+90.30	150158.0538	499864.0967	Rc =	3000.00'	Eu =	1.11''		
	CS	2584+43.82	150181.0706	499912.4579	Lc =	107.08'	V =	40 MPH		
	ST	2584+93.82	150202.8000	499957.4892	Ls2 =	50.00'				
TRACK AHEAD									753.57'	N 64° 24' 00'' E
TIE IN	EP	2592+47.40	150528.4077	500637.0850						

NO.	DATE	BY	CHECK	DESIGN	REVISION / SUBMITTAL

AECOM

90% SUBMISSION - 01/22/16

METROPOLITAN COUNCIL

SOUTHWEST Green Line LRT Extension

CIVIL - VOLUME 3B
TRACK
ALIGNMENT DATA
SHEET 1

DISCIPLINE: TRACK

SHEET NAME: E1-TRK-ALG-001

SHEET 13 OF 420

Jan, 18 2016 10:07 am V:\3400_ADC\CAD\00_EAST\PLANSHEETS\TRACK\E1-TRK-ALG.dwg By: V-BurrellM

TRACK 1 ALIGNMENT

DESCRIPTION	POINT DESC.	STATIONING	COORDINATES		SPIRAL AND CURVE DATA / EQUATIONS				TANGENT	
			NORTHING	EASTING					DISTANCE	BEARING
TIE IN	BP	1496+00.21	146736.6351	491780.0875						
TRACK AHEAD									1352.74'	N 70° 04' 00'' E
STATION EQUATION		1509+52.95 BK								
		1509+53.19 AH								
TRACK AHEAD									988.57'	N 70° 04' 00'' E
STATION EQUATION		1519+41.76 BK								
		1519+42.12 AH								
TRACK AHEAD									241.38'	N 70° 04' 00'' E
CURVE E1-104	TS	1521+83.50	147617.1497	494208.0538	Ls1 =	110.00'				
	SC	1522+93.50	147654.8623	494311.3868	I =	01° 31' 43'' LT	Ea =	0.50''		
	PI	1523+58.56	147676.8324	494372.6252	Rc =	9000.00'	Eu =	1.36''		
	CS	1524+23.60	147700.8452	494433.0918	Lc =	130.10'	V =	65 MPH		
	ST	1525+33.60	147740.8837	494535.5461	Ls2 =	110.00'				
STATION EQUATION	ST	1525+33.60 BK								
		1525+33.98 AH								
TRACK AHEAD									392.57'	N 68° 32' 17'' E
CURVE E1-105	TS	1529+26.54	147884.5172	494900.8916	Ls1 =	100.00'				
	SC	1530+26.54	147920.9163	494994.0317	I =	01° 23' 58'' RT	Ea =	0.75''		
	PI	1530+76.69	147939.4553	495040.6318	Rc =	8200.00'	Eu =	1.29''		
	CS	1531+26.83	147956.4687	495087.8102	Lc =	100.29'	V =	65 MPH		
	ST	1532+26.83	147990.9640	495181.6720	Ls2 =	100.00'				
STATION EQUATION	ST	1532+26.83 BK								
		1532+26.49 AH								
TRACK AHEAD									180.65'	N 69° 56' 15'' E
CURVE E1-106	TS	1534+07.14	148052.9340	495351.3573	Ls1 =	160.00'				
	SC	1535+67.14	148108.8209	495501.2764	I =	05° 43' 02'' LT	Ea =	2.25''		
	PI	1536+86.89	148148.9009	495614.1322	Rc =	4000.00'	Eu =	1.93''		
	CS	1538+06.28	148201.9453	495721.5059	Lc =	239.14'	V =	65 MPH		
	ST	1539+66.28	148270.5682	495866.0396	Ls2 =	160.00'				
STATION EQUATION	ST	1539+66.28 BK								
		1539+67.68 AH								
TRACK AHEAD									509.66'	N 64° 13' 13'' E

DESCRIPTION	POINT DESC.	STATIONING	COORDINATES		SPIRAL AND CURVE DATA / EQUATIONS				TANGENT	
			NORTHING	EASTING					DISTANCE	BEARING
CURVE E1-107	TS	1544+77.34	148492.2267	496324.9747	Ls1 =	80.00'				
	SC	1545+57.34	148527.1158	496396.9660	I =	01° 19' 13'' LT	Ea =	0.00''		
	PI	1546+32.56	148559.7312	496464.7401	Rc =	10000.00'	Eu =	1.20''		
	CS	1547+07.76	148594.0893	496531.6477	Lc =	150.42'	V =	55 MPH		
	ST	1547+87.76	148630.4379	496602.9132	Ls2 =	80.00'				
STATION EQUATION	ST	1547+87.76 BK								
		1547+88.08 AH								
TRACK AHEAD									299.45'	N 62° 54' 00'' E
CURVE E1-108	TS	1550+87.54	148766.8528	496869.4913	Ls1 =	120.00'				
	SC	1552+07.54	148820.9848	496976.5869	I =	04° 30' 00'' RT	Ea =	1.25''		
	PI	1553+05.25	148866.0322	497063.3048	Rc =	4014.00'	Eu =	1.74''		
	CS	1554+02.79	148903.0330	497153.7494	Lc =	195.26'	V =	55 MPH		
	ST	1555+22.79	148949.6994	497264.3024	Ls2 =	120.00'				
STATION EQUATION	ST	1555+22.79 BK								
		1555+21.69 AH								
TRACK AHEAD									172.40'	N 67° 24' 00'' E
CURVE E1-109	TS	1556+94.10	149015.9528	497423.4660	Ls1 =	90.00'				
	SC	1557+84.10	149050.7469	497506.4679	I =	03° 00' 00'' LT	Ea =	0.50''		
	PI	1558+96.21	149093.6254	497610.0624	Rc =	6000.00'	Eu =	1.49''		
	CS	1560+08.26	149142.2727	497711.0763	Lc =	224.16'	V =	55 MPH		
	ST	1560+98.26	149180.9573	497792.3380	Ls2 =	90.00'				
STATION EQUATION	ST	1560+98.26 BK								
		1560+98.99 AH								
TRACK AHEAD									1334.56'	N 64° 24' 00'' E
STATION EQUATION		1574+33.55 BK								
		1574+33.90 AH								
TRACK AHEAD									1059.57'	N 64° 24' 00'' E
STATION EQUATION		1584+93.47 BK								
		1584+93.82 AH								
TRACK AHEAD									753.58'	N 64° 24' 00'' E
TIE IN	EP	1592+47.40	150541.0334	500631.0358						

NO.	DATE	BY	CHECK	DESIGN	REVISION / SUBMITTAL

AECOM

90% SUBMISSION - 01/22/16

METROPOLITAN COUNCIL

SOUTHWEST Green Line LRT Extension

CIVIL - VOLUME 3B
TRACK
ALIGNMENT DATA
SHEET 2

DISCIPLINE: TRACK

SHEET NAME: E1-TRK-ALG-002

SHEET 14 OF 420

Jan, 18 2016 10:08 am V:\3400_ADC\CAD\00_EAST\PLANSHEETS\TRACK\E1-TRK-AL6.dwg By: V-BurrellM

TRACK 2 ALIGNMENT

DESCRIPTION	POINT DESC.	STATIONING	COORDINATES		SPIRAL AND CURVE DATA / EQUATIONS				TANGENT	
			NORTHING	EASTING					DISTANCE	BEARING
TIE IN	BP	2595+00.00	150528.4077	500637.0850						
TRACK AHEAD									2936.58'	N 64° 24' 00'' E
NO. 8 DOUBLE CROSSOVER	PS	2624+36.58	151797.2617	503285.3877						
	TRACK AHEAD								20.93'	N 64° 24' 00'' E
	PITO	2624+57.51	151806.3053	503304.2630						
	TRACK AHEAD								111.56	N 64° 24' 00'' E
	PITO	2625+69.07	151854.5091	503404.8722						
	TRACK AHEAD								20.93'	N 64° 24' 00'' E
	PS	2625+90.00	151863.5527	503423.7475						
TRACK AHEAD									259.06'	N 64° 24' 00'' E
CURVE E2-200	TS	2628+49.06	151975.4897	503657.3782	Ls1 =	100.00'				
	SC	2629+49.06	152017.9403	503747.9176	I =	07° 03' 29'' RT	Ea =	2.00''		
	PI	2630+21.80	152050.1271	503813.1585	Rc =	1990.00'	Eu =	2.03''		
	CS	2630+94.20	152072.4656	503882.3925	Lc =	145.15'	V =	45 MPH		
	ST	2631+94.20	152105.0575	503976.9293	Ls2 =	100.00'				
TRACK AHEAD									472.56'	N 71° 27' 29'' E
CURVE E2-201	TS	2636+66.76	152255.3297	504424.9556	Ls1 =	60.00'				
	SC	2637+26.76	152274.9768	504481.6452	I =	07° 03' 29'' LT	Ea =	1.75''		
	PI	2637+58.44	152284.4837	504511.8762	Rc =	1000.00'	Eu =	1.81''		
	CS	2637+89.95	152298.7154	504540.1914	Lc =	63.19'	V =	30 MPH		
	ST	2638+49.95	152324.0971	504594.5558	Ls2 =	60.00'				
TRACK AHEAD									563.42'	N 64° 24' 00'' E
CURVE E2-202	TS	2644+13.37	152567.5441	505102.6688	Ls1 =	80.00'				
	SC	2644+93.37	152602.6526	505174.5513	I =	08° 42' 37'' LT	Ea =	1.75''		
	PI	2645+88.18	152643.0778	505260.3198	Rc =	1770'	Eu =	1.83''		
	CS	2646+82.45	152697.0210	505338.2978	Lc =	189.08'	V =	40 MPH		
	ST	2647+62.45	152741.6150	505404.7139	Ls2 =	80.00'				
TRACK AHEAD									99.09'	N 55° 41' 23'' E
CURVE E2-203	TS	2648+61.55	152797.4721	505486.5656	Ls1 =	150.00'				
	SC	2650+11.55	152881.0717	505611.1050	I =	08° 42' 37'' RT	Ea =	2.00''		
	PI	2651+85.61	152980.1366	505754.2379	Rc =	3270.00'	Eu =	1.66''		
	CS	2653+58.66	153054.3146	505911.7134	Lc =	347.12'	V =	55 MPH		
	ST	2655+08.66	153120.1583	506046.4857	Ls2 =	150.00'				
TRACK AHEAD									677.18'	N 64° 24' 00'' E
CURVE E2-204	TS	2661+85.84	153412.7579	506657.1883	Ls1 =	50.00'				
	SC	2662+35.84	153434.2368	506702.3396	I =	03° 00' 00'' RT	Ea =	1.00''		
	PI	2662+89.40	153457.5041	506750.5808	Rc =	3000.00'	Eu =	1.11''		
	CS	2663+42.92	153477.9584	506800.0804	Lc =	107.08'	V =	40 MPH		
	ST	2663+92.92	153497.3012	506846.1872	Ls2 =	50.00'				
TRACK AHEAD									105.77'	N 67° 24' 00'' E
CURVE E2-205	TS	2664+98.69	153537.9463	506943.8307	Ls1 =	50.00'				
	SC	2665+48.69	153557.2891	506989.9375	I =	03° 00' 00'' LT	Ea =	1.00''		
	PI	2666+02.25	153577.7434	507039.4370	Rc =	3000.00'	Eu =	1.11''		
	CS	2666+55.77	153601.0107	507087.6782	Lc =	107.08'	V =	40 MPH		
	ST	2667+05.77	153622.4896	507132.8296	Ls2 =	50.00'				
TRACK AHEAD									505.00'	N 64° 24' 00'' E

DESCRIPTION	POINT DESC.	STATIONING	COORDINATES		SPIRAL AND CURVE DATA / EQUATIONS				TANGENT	
			NORTHING	EASTING					DISTANCE	BEARING
CURVE E2-206	TS	2672+10.77	153840.6929	507588.2550	Ls1 =	50.00'				
	SC	2672+60.77	153862.4223	507633.2863	I =	03° 00' 00'' LT	Ea =	1.00''		
	PI	2673+14.33	153885.4391	507681.6475	Rc =	3000.00'	Eu =	1.11''		
	CS	2673+67.85	153911.1992	507728.6049	Lc =	107.08'	V =	40 MPH		
	ST	2674+17.85	153935.0117	507772.5702	Ls2 =	50.00'				
TRACK AHEAD									105.77'	N 61° 24' 00'' E
CURVE E2-207	TS	2675+23.61	153985.6407	507865.4302	Ls1 =	50.00'				
	SC	2675+73.61	154009.4531	507909.3956	I =	03° 00' 00'' RT	Ea =	1.00''		
	PI	2676+27.17	154035.2133	507956.3529	Rc =	3000.00'	Eu =	1.11''		
	CS	2676+80.69	154058.2301	508004.7142	Lc =	107.08'	V =	40 MPH		
	ST	2677+30.69	154079.9595	508049.7455	Ls2 =	50.00'				
TRACK AHEAD									2855.15'	N 64° 24' 00'' E
CURVE E2-208	TS	2705+85.84	155313.6297	510624.6137	Ls1 =	50.00'				
	SC	2706+35.84	155335.1085	510669.7650	I =	03° 00' 00'' RT	Ea =	1.00''		
	PI	2706+89.40	155358.3759	510718.0062	Rc =	3000.00'	Eu =	1.11''		
	CS	2707+42.92	155378.8301	510767.5058	Lc =	107.08'	V =	40 MPH		
	ST	2707+92.92	155398.1730	510813.6126	Ls2 =	50.00'				
TRACK AHEAD									105.77'	N 64° 24' 00'' E
CURVE E2-209	TS	2708+98.69	155438.8180	510911.2560	Ls1 =	50.00'				
	SC	2709+48.69	155458.1609	510957.3628	I =	03° 00' 00'' LT	Ea =	1.00''		
	PI	2710+02.25	155478.6151	511006.8624	Rc =	3000.00'	Eu =	1.11''		
	CS	2710+55.77	155501.8824	511055.1036	Lc =	107.08'	V =	40 MPH		
	ST	2711+05.77	155523.3613	511100.2549	Ls2 =	50.00'				
TRACK AHEAD									767.15'	N 64° 24' 00'' E
CURVE E2-210	TS	2718+72.92	155854.8380	511792.1002	Ls1 =	70.00'				
	SC	2719+42.92	155884.7515	511855.3858	I =	04° 00' 28'' RT	Ea =	1.25''		
	PI	2719+85.60	155903.5237	511893.7151	Rc =	2220.00'	Eu =	1.63''		
	CS	2720+28.21	155918.8871	511933.5334	Lc =	85.28'	V =	40 MPH		
	ST	2720+98.21	155944.9885	511998.4842	Ls2 =	70.00'				
TRACK AHEAD									50.00'	N 68° 24' 28'' E
NO. 8 RH CROSSOVER	PITO	2721+48.21	155963.3890	512044.9767						
	TRACK AHEAD								20.93'	N 68° 24' 28'' E
	PS	2721+69.14	155971.0912	512064.4380						
TRACK AHEAD									50.00'	N 68° 24' 28'' E
NO. 8 LH CROSSOVER	PS	2722+19.14	155989.4912	512110.9293						
	TRACK AHEAD								20.93'	N 68° 24' 28'' E
	PITO	2722+40.07	155997.1934	512130.3905						
TRACK AHEAD									175.08'	N 68° 24' 28'' E
CURVE E2-211	TS	2724+15.15	156061.6237	512293.1865	Ls1 =	140.00'				
	SC	2725+55.15	156112.0557	512423.7833	I =	19° 31' 24'' RT	Ea =	2.25''		
	PI	2729+66.91	156264.6722	512806.2295	Rc =	2800.00'	Eu =	2.03''		
	CS	2733+69.24	156278.3728	513217.7744	Lc =	814.09'	V =	55 MPH		
	ST	2735+09.24	156284.5928	513357.6323	Ls2 =	140.00'				
TRACK AHEAD									43.17'	N 87° 55' 51'' E
TIE IN	EP	2735+52.41	156286.1514	513400.7730						

NO.	DATE	BY	CHECK	DESIGN	REVISION / SUBMITTAL

AECOM

90% SUBMISSION - 01/22/16

METROPOLITAN COUNCIL

SOUTHWEST Green Line LRT Extension

CIVIL - VOLUME 3B
TRACK
ALIGNMENT DATA
SHEET 3

DISCIPLINE: TRACK

SHEET NAME: E2-TRK-ALG-001

SHEET 15 OF 420

Jan, 18 2016 10:08 am V:\3400_ADC\CAD\00_EAST\PLANSHEETS\TRACK\E2-TRK-ALG.dwg By: V-BurrellM

TRACK 1 ALIGNMENT

DESCRIPTION	POINT DESC.	STATIONING	COORDINATES		SPIRAL AND CURVE DATA / EQUATIONS				TANGENT	
			NORTHING	EASTING					DISTANCE	BEARING
TIE IN	BP	1595+00.00	150541.0334	500631.0358						
TRACK AHEAD									2936.58'	N 64° 24' 00'' E
NO. 8 DOUBLE CROSSOVER	PS	1624+36.58	151809.8874	503279.3385						
TRACK AHEAD									20.93'	N 64° 24' 00'' E
	PITO	1624+57.51	151818.9309	503298.2138						
TRACK AHEAD									111.56'	N 64° 24' 00'' E
	PITO	1625+69.07	151867.1348	503398.8230						
TRACK AHEAD									20.93'	N 64° 24' 00'' E
	PS	1625+90.00	151876.1783	503417.6983						
TRACK AHEAD									259.93'	N 64° 24' 00'' E
CURVE E2-100	TS	1628+49.93	151988.4884	503652.1076	Ls1 =	100.00'				
	SC	1629+49.93	152030.9390	503742.6470	I =	07° 03' 29'' RT	Ea =	2.00''		
	PI	1630+22.66	152063.1259	503807.8879	Rc =	1990.00'	Eu =	2.03''		
	CS	1630+95.07	152085.4643	503877.1220	Lc =	145.14'	V =	45 MPH		
	ST	1631+95.07	152118.0562	503971.6588	Ls2 =	100.00'				
STATION EQUATION	ST	1631+95.07 BK								
		1631+93.34 AH								
TRACK AHEAD									305.92'	N 71° 27' 29'' E
CURVE E2-101	TS	1634+99.26	152215.3391	504261.7010	Ls1 =	70.00'				
	SC	1635+69.26	152238.1280	504327.8857	I =	07° 03' 29'' RT	Ea =	1.50''		
	PI	1636+24.31	152255.1042	504380.2578	Rc =	1460.00'	Eu =	1.82''		
	CS	1636+79.11	152279.3957	504429.6637	Lc =	109.85'	V =	35 MPH		
	ST	1637+49.11	152309.1356	504493.0300	Ls2 =	70.00'				
STATION EQUATION	ST	1637+49.11 BK								
		1637+51.92 AH								
TRACK AHEAD									490.02'	N 64° 24' 00'' E
CURVE E2-102	TS	1642+41.94	152520.8653	504934.9441	Ls1 =	60.00'				
	SC	1643+01.94	152546.9982	504988.9536	I =	04° 54' 01'' LT	Ea =	1.25''		
	PI	1643+83.20	152581.8999	505062.3330	Rc =	2600.00'	Eu =	1.19''		
	CS	1644+64.31	152623.3399	505132.2286	Lc =	162.37'	V =	40 MPH		
	ST	1645+24.31	152653.5933	505184.0426	Ls2 =	60.00'				
TRACK AHEAD									495.97'	N 59° 29' 59'' E
CURVE E2-103	TS	1650+20.28	152905.3198	505611.3833	Ls1 =	120.00'				
	SC	1651+40.28	152965.7067	505715.0806	I =	04° 54' 01'' RT	Ea =	1.00''		
	PI	1652+51.45	153022.6460	505810.5610	Rc =	4000.00'	Eu =	1.99''		
	CS	1653+62.39	153070.1389	505911.0748	Lc =	222.11'	V =	55 MPH		
	ST	1654+82.39	153122.5291	506019.0331	Ls2 =	120.00'				
STATION EQUATION	ST	1654+82.39 BK								
		1654+84.93 AH								
TRACK AHEAD									160.80'	N 64° 24' 00'' E

DESCRIPTION	POINT DESC.	STATIONING	COORDINATES		SPIRAL AND CURVE DATA / EQUATIONS				TANGENT	
			NORTHING	EASTING					DISTANCE	BEARING
STATION EQUATION		1667+05.42 BK								
		1667+05.77 AH								
TRACK AHEAD									1024.57'	N 64° 24' 00'' E
STATION EQUATION		1677+30.34 BK								
		1677+30.69 AH								
TRACK AHEAD									3374.73'	N 64° 24' 00'' E
STATION EQUATION		1711+05.42 BK								
		1711+05.77 AH								
TRACK AHEAD									516.63'	N 64° 24' 00'' E
CURVE E2-110	TS	1716+22.40	155773.9842	511553.0467	Ls1 =	50.00'				
	SC	1716+72.40	155795.4631	511598.1980	I =	04° 00' 28'' RT	Ea =	1.00''		
	PI	1717+52.37	155830.1401	511670.2532	Rc =	3000.00'	Eu =	1.11''		
	CS	1718+32.24	155859.4382	511744.6580	Lc =	159.84'	V =	40 MPH		
	ST	1718+82.24	155877.9672	511791.0979	Ls2 =	50.00'				
STATION EQUATION	ST	1718+82.24 BK								
		1718+80.70 AH								
TRACK AHEAD									135.01'	N 68° 24' 28'' E
NO. 8 RH CROSSOVER	PS	1720+15.71	155927.6499	511916.6314						
TRACK AHEAD									20.93'	N 68° 24' 28'' E
	PITO	1720+36.64	155935.3522	511936.0926						
TRACK AHEAD									314.98'	N 68° 24' 28'' E
NO. 8 LH CROSSOVER	PITO	1723+51.62	156051.2654	512228.9706						
TRACK AHEAD									20.93'	N 68° 24' 28'' E
	PS	1723+72.55	156058.9676	512248.4319						
TRACK AHEAD									45.00'	N 68° 24' 28'' E
CURVE E2-111	TS	1724+17.55	156075.5276	512290.2741	Ls1 =	140.00'				
	SC	1725+57.55	156125.9596	512420.8709	I =	19° 31' 24'' RT	Ea =	2.25''		
	PI	1729+69.31	156278.5761	512803.3171	Rc =	2800.00'	Eu =	2.03''		
	CS	1733+71.64	156292.2767	513214.8620	Lc =	814.09'	V =	55 MPH		
	ST	1735+11.64	156298.4967	513354.7199	Ls2 =	140.00'				
STATION EQUATION	ST	1735+11.64 BK								
		1735+06.82 AH								
TRACK AHEAD									45.58'	N 87° 55' 51'' E
TIE IN	EP	1735+52.40	156300.1422	513400.2676						

NO.	DATE	BY	CHECK	DESIGN	REVISION / SUBMITTAL

AECOM

90% SUBMISSION - 01/22/16

METROPOLITAN COUNCIL

SOUTHWEST Green Line LRT Extension

CIVIL - VOLUME 3B
TRACK
ALIGNMENT DATA
SHEET 4

DISCIPLINE: TRACK

SHEET NAME: E2-TRK-ALG-002

SHEET 16 OF 420

Jan, 18 2016 10:08 am V:\3400_ADC\CAD\00_EAST\PLANSHEETS\TRACK\E2-TRK-ALG.dwg By: V-BurrellM

TRACK 2 ALIGNMENT

DESCRIPTION	POINT DESC.	STATIONING	COORDINATES		SPIRAL AND CURVE DATA / EQUATIONS				TANGENT	
			NORTHING	EASTING					DISTANCE	BEARING
TIE IN	BP	2746+00.00	156286.1514	513400.7730						
TRACK AHEAD									298.18'	N 87° 55' 51'' E
CURVE E3-201	TS	2748+98.18	156296.9167	513698.7570	Ls1 =	150.00'				
	SC	2750+48.18	156304.3245	513848.5634	I =	43° 09' 35'' LT	Ea =	1.75''		
	PI	2757+16.43	156326.4586	514516.4781	Rc =	1880.00'	Eu =	2.52''/1.62''		
	CS	2763+49.35	156826.7622	515012.0011	Lc =	1301.17'	V =	45/40 MPH		
	ST	2764+29.35	156883.1541	515068.7435	Ls2 =	80.00'				
TRACK AHEAD									799.05'	N 44° 46' 16'' E
CURVE E3-202	TS	2772+28.40	157450.4227	515631.4977	Ls1 =	120.00'				
	SC	2773+48.40	157536.4685	515715.1334	I =	22° 53' 51'' LT	Ea =	2.00''		
	PI	2776+85.25	157774.7521	515953.2461	Rc =	1959.25'	Eu =	2.09''		
	CS	2780+11.39	158087.8180	516077.6103	Lc =	662.99'	V =	45 MPH		
	ST	2781+31.39	158198.7122	516123.4501	Ls2 =	120.00'				
TRACK AHEAD									384.76'	N 21° 52' 25'' E
CURVE E3-203	TS	2785+16.15	158555.7770	516266.7981	Ls1 =	120.00'				
	SC	2786+36.15	158666.6346	516312.7241	I =	14° 35' 12'' RT	Ea =	2.25''		
	PI	2788+09.13	158827.6569	516375.9476	Rc =	1820.00'	Eu =	2.16''		
	CS	2789+79.50	158965.9996	516479.8068	Lc =	343.34'	V =	45 MPH		
	ST	2790+99.50	159063.2851	516550.0503	Ls2 =	120.00'				
TRACK AHEAD									463.95'	N 36° 27' 37'' E
CURVE E3-204	TS	2795+63.44	159436.4221	516825.7565	Ls1 =	60.00'				
	SC	2796+23.44	159484.6308	516861.4764	I =	03° 16' 42'' RT	Ea =	0.00''		
	PI	2798+08.93	159633.8593	516971.6404	Rc =	7530.00'	Eu =	1.06''		
	CS	2799+94.30	159776.4417	517090.2805	Lc =	370.85'	V =	45 MPH		
	ST	2800+54.30	159822.6307	517128.5763	Ls2 =	60.00'				
TRACK AHEAD									309.54'	N 39° 44' 19'' E
CURVE E3-205	TS	2803+63.84	160060.6566	517326.4602	Ls1 =	150.00'				
	SC	2805+13.84	160177.6692	517420.2813	I =	29° 10' 52'' LT	Ea =	3.00''		
	PI	2808+06.03	160400.6898	517609.1484	Rc =	1410.00'	Eu =	2.69''		
	CS	2810+81.96	160688.4660	517660.0791	Lc =	568.12'	V =	45 MPH		
	ST	2812+31.96	160835.3977	517690.1689	Ls2 =	150.00'				
TRACK AHEAD									505.41'	N 10° 33' 27'' E
CURVE E3-206	TS	2817+37.37	161332.2530	517782.7724	Ls1 =	100.00'				
	SC	2818+37.37	161430.8461	517799.4185	I =	13° 31' 45'' LT	Ea =	2.50''		
	PI	2819+03.66	161495.7277	517813.2407	Rc =	980.00'	Eu =	2.45''		
	CS	2819+68.77	161561.8662	517808.1048	Lc =	131.41'	V =	35 MPH		
	ST	2820+68.77	161661.7939	517804.6202	Ls2 =	100.00'				
TRACK AHEAD									587.84'	N 2° 58' 18'' W
CURVE E3-207	TS	2826+56.61	162248.8446	517774.1461	Ls1 =	170.00'				
	SC	2828+26.61	162418.7403	517770.9312	I =	30° 26' 39'' RT	Ea =	4.00''		
	PI	2829+75.98	162567.7816	517757.5900	Rc =	860.00'	Eu =	3.37''		
	CS	2831+13.58	162697.8694	517831.5388	Lc =	286.96'	V =	40 MPH		
	ST	2832+83.58	162851.1334	517904.9218	Ls2 =	170.00'				
TRACK AHEAD									416.43'	N 27° 28' 22'' E
TIE IN	EP	2837+00.01	163220.6065	518097.0331						

NO.	DATE	BY	CHECK	DESIGN	REVISION / SUBMITTAL

AECOM

90% SUBMISSION - 01/22/16

METROPOLITAN COUNCIL

SOUTHWEST Green Line LRT Extension

CIVIL - VOLUME 3B
TRACK
ALIGNMENT DATA
SHEET 5

DISCIPLINE: TRACK

SHEET NAME: E3-TRK-ALG-001

SHEET 17 OF 420

Jan, 18 2016 10:09 am V:\3400_ADC\CAD\00_EAST\PLANSHEETS\TRACK\E3-TRK-ALG.dwg By: V-BurrellM

TRACK 1 ALIGNMENT

DESCRIPTION	POINT DESC.	STATIONING	COORDINATES		SPIRAL AND CURVE DATA / EQUATIONS				TANGENT	
			NORTHING	EASTING					DISTANCE	BEARING
TIE IN	BP	1746+00.00	156300.1422	513400.2676						
TRACK AHEAD									292.64'	N 87° 55' 51'' E
CURVE E3-101A CURVE E3-101A	TS	1748+92.64	156310.7076	513692.7178	Ls1 =	150.00'				
	SC1	1750+42.64	156318.1155	513842.5242			Ea =	2.75''		
					RC1 =	1880.00'	Eu =	2.52''		
	CS1	1758+53.43	156549.4327	514613.0698	LC1 =	810.79'	V =	50 MPH		
	PI	1756+86.96	156339.3853	514486.5158	I =	43° 09' 35'' LT				
	SC2	1759+03.43	156574.3646	514656.4080	LS2 =	50.00'	Ea =	3.00''		
					RC2 =	1410.00'	Eu =	2.69''		
	CS2	1761+82.46	156740.1181	514880.3140	LC2 =	279.04'	V =	45 MPH		
	ST	1763+32.46	156844.7041	514987.8133	LS3 =	150.00'				
STATION EQUATION	ST	1763+32.46 BK								
		1763+45.05 AH								
TRACK AHEAD									1012.76'	N 44° 46' 16'' E
CURVE E3-102A CURVE E3-102B	TS	1773+57.82	157563.6910	515701.0785	Ls1 =	80.00'				
	SC1	1774+37.82	157621.0208	515756.8712			Ea =	1.50''		
					RC1 =	1390.00'	Eu =	1.99''		
	CS1	1776+56.21	157791.4729	515893.0448	LC1 =	218.39'	V =	35 MPH		
	PI	1777+07.69	157812.0761	515947.4869	I =	22° 53' 51'' LT				
	SC2	1776+96.21	157824.8761	515915.0482	LS2 =	40.00'	Ea =	2.00''		
					RC2 =	1940.00'	Eu =	2.13''		
	CS2	1780+02.96	158094.9950	516059.7352	LC2 =	306.75'	V =	45 MPH		
	ST	1781+22.96	158205.8845	516105.5861	LS3 =	120.00'				
STATION EQUATION	ST	1781+22.96 BK								
		1781+31.39 AH								
TRACK AHEAD									384.76'	N 21° 52' 25'' E
CURVE E3-103	TS	1785+16.16	158562.9491	516248.9341	Ls1 =	120.00'				
	SC	1786+36.16	158673.8121	516294.8474	I =	14° 35' 12'' RT	Ea =	2.25''		
	PI	1788+11.59	158837.1151	516359.0014	Rc =	1839.25'	Eu =	2.11''		
	CS	1789+84.40	158977.4469	516464.3131	Lc =	348.24'	V =	45 MPH		
	ST	1791+04.40	159074.7243	516534.5678	Ls2 =	120.00'				
STATION EQUATION	ST	1791+04.40 BK								
		1790+99.50 AH								
TRACK AHEAD									531.59'	N 36° 27' 37'' E

DESCRIPTION	POINT DESC.	STATIONING	COORDINATES		SPIRAL AND CURVE DATA / EQUATIONS				TANGENT	
			NORTHING	EASTING					DISTANCE	BEARING
CURVE E3-104	TS	1796+31.09	159502.2669	516850.4736	Ls1 =	80.00'				
	SC	1797+11.09	159566.3847	516898.3149	I =	03° 16' 42'' RT	Ea =	1.25''		
	PI	1797+52.65	159600.0345	516922.7129	Rc =	2850.00'	Eu =	1.56''		
	CS	1797+94.16	159631.7554	516949.5709	Lc =	83.07'	V =	45 MPH		
	ST	1798+74.16	159693.5110	517000.4250	Ls2 =	80.00'				
STATION EQUATION	ST	1798+74.16 BK								
		1798+73.08 AH								
TRACK AHEAD									490.69'	N 39° 44' 19'' E
CURVE E3-105	TS	1803+63.77	160070.8368	517314.1165	Ls1 =	150.00'				
	SC	1805+13.77	160187.8494	517407.9376	I =	29° 10' 52'' LT	Ea =	3.00''		
	PI	1808+05.97	160410.8701	517596.8047	Rc =	1410.00'	Eu =	2.69''		
	CS	1810+81.89	160698.6462	517647.7354	Lc =	568.12'	V =	45 MPH		
	ST	1812+31.89	160845.5780	517677.8252	Ls2 =	150.00'				
STATION EQUATION	ST	1812+31.89 BK								
		1812+39.70 AH								
TRACK AHEAD									395.96'	N 10° 33' 27'' E
CURVE E3-106	TS	1816+35.67	161234.8378	517750.3752	Ls1 =	70.00'				
	SC	1817+05.67	161303.7582	517762.6097	I =	13° 31' 45'' LT	Ea =	1.75''		
	PI	1818+32.00	161427.8489	517786.3484	Rc =	1360.00'	Eu =	1.82''		
	CS	1819+56.80	161553.9874	517779.1993	Lc =	251.14'	V =	35 MPH		
	ST	1820+26.80	161623.9198	517776.1703	Ls2 =	70.00'				
STATION EQUATION	ST	1820+26.80 BK								
		1820+32.43 AH								
TRACK AHEAD									600.14'	N 02° 58' 18'' W
CURVE E3-107	TS	1826+32.56	162223.2505	517745.0588	Ls1 =	170.00'				
	SC	1828+02.56	162393.1463	517741.8439	I =	30° 26' 39'' RT	Ea =	4.00''		
	PI	1829+51.93	162542.1875	517728.5027	Rc =	860.00'	Eu =	3.37''		
	CS	1830+89.53	162672.2754	517802.4515	Lc =	286.96'	V =	40 MPH		
	ST	1832+59.53	162825.5394	517875.8344	Ls2 =	170.00'				
STATION EQUATION	ST	1832+59.53 BK								
		1832+47.45 AH								
TRACK AHEAD									452.56'	N 27° 28' 22'' E
TIE IN	EP	1837+00.01	163227.0650	518084.6118						

Jan, 18 2016 10:09 am V:\3400_ADC\CAD\00_EAST\PLANSHEETS\TRACK\E3-TRK-ALG.dwg By: V-BurrellM

NO.	DATE	BY	CHECK	DESIGN	REVISION / SUBMITTAL

AECOM

90% SUBMISSION - 01/22/16

METROPOLITAN COUNCIL

SOUTHWEST Green Line LRT Extension

CIVIL - VOLUME 3B
TRACK
ALIGNMENT DATA
SHEET 6

DISCIPLINE: TRACK

SHEET NAME: E3-TRK-ALG-002

SHEET 18 OF 420

TRACK 2 ALIGNMENT

DESCRIPTION	POINT DESC.	STATIONING	COORDINATES		SPIRAL AND CURVE DATA / EQUATIONS				TANGENT	
			NORTHING	EASTING					DISTANCE	BEARING
TIE IN	BP	2839+97.38	163220.6065	518097.0331						
TRACK AHEAD									239.73'	N 27° 28' 22'' E
CURVE E4-200	TS	2842+37.11	163433.3017	518207.6262	Ls1 =	130.00'				
	SC	2843+67.11	163548.1056	518268.6101	I =	27° 43' 03'' RT	Ea =	2.00''		
	PI	2849+09.08	164029.5005	518517.6259	Rc =	2460.00'	Eu =	2.02''		
	CS	2854+27.16	164337.9562	518963.2771	Lc =	1060.05'	V =	50 MPH		
	ST	2855+57.16	164413.1023	519069.3526	Ls2 =	130.00'				
TRACK AHEAD									377.75'	N 55° 11' 24'' E
CURVE E4-202	TS	2859+34.90	164628.7413	519379.5018	Ls1 =	80.00'				
	SC	2860+14.90	164673.6688	519445.6901	I =	15° 45' 42'' RT	Ea =	2.00''		
	PI	2861+39.65	164745.6241	519547.6120	Rc =	1190.00'	Eu =	2.05''		
	CS	2862+62.26	164785.4938	519665.8323	Lc =	247.36'	V =	35 MPH		
	ST	2863+42.26	164812.4472	519741.1507	Ls2 =	80.00'				
TRACK AHEAD									847.06'	N 70° 57' 06'' E
CURVE E4-203	TS	2871+89.33	165088.8985	520541.8327	Ls1 =	200.00'				
	SC	2873+89.33	165157.5579	520729.6504	I =	02° 06' 48'' LT	Ea =	3.50''		
	PI	2876+84.65	165250.5549	521010.0356	Rc =	1850.00'	Eu =	2.98''		
	CS	2879+67.91	165455.2422	521223.0318	Lc =	578.59'	V =	55 MPH		
	ST	2881+67.91	165589.3858	521371.3392	Ls2 =	200.00'				
TRACK AHEAD									50	N 46° 50' 18'' E
NO. 8 LH CROSSOVER	PS	2882+17.91	165623.5887	521407.8106						
TRACK AHEAD									20.93'	N 46° 50' 18'' E
	PITO	2882+38.84	165637.9060	521423.0775						
TRACK AHEAD									299.65'	N 46° 50' 18'' E
NO. 8 RH CROSSOVER	PITO	2888+38.49	166048.0999	521860.4772						
TRACK AHEAD									20.93'	N 46° 50' 18'' E
	PS	2888+59.42	166062.4173	521875.7441						
TRACK AHEAD									243.61'	N 46° 50' 18'' E
CURVE E4-204	TS	2891+03.03	166229.0612	522053.4406	Ls1 =	80.00'				
	SC	2891+83.03	166283.5500	522112.0144	I =	03° 00' 00'' RT	Ea =	1.00''		
	PI	2892+29.71	166315.7158	522145.8426	Rc =	3310.00'	Eu =	1.42''		
	CS	2892+76.34	166345.5746	522181.7234	Lc =	93.31'	V =	45 MPH		
	ST	2893+56.34	166397.4158	522242.6530	Ls2 =	80.00'				
TRACK AHEAD									147.90'	N 49° 50' 18'' E
CURVE E4-205	TS	2895+04.24	166492.8026	522355.6818	Ls1 =	80.00'				
	SC	2895+84.24	166544.6438	522416.6114	I =	03° 00' 00'' LT	Ea =	1.00''		
	PI	2896+30.92	166574.5026	522452.4923	Rc =	3310.00'	Eu =	1.42''		
	CS	2896+77.55	166606.6684	522486.3204	Lc =	93.31'	V =	45 MPH		
	ST	2897+57.55	166661.1572	522544.8942	Ls2 =	80.00'				
TRACK AHEAD									463.83'	N 46° 50' 18'' E

DESCRIPTION	POINT DESC.	STATIONING	COORDINATES		SPIRAL AND CURVE DATA / EQUATIONS				TANGENT	
			NORTHING	EASTING					DISTANCE	BEARING
CURVE E4-206	TS	2902+21.38	166978.4412	522883.2218	Ls1 =	180.00'				
	SC	2904+01.38	167099.5775	523016.3389	I =	18° 26' 24'' RT	Ea =	3.00''		
	PI	2906+36.13	167262.1523	523185.7498	Rc =	2000.00'	Eu =	2.99''		
	CS	2908+65.05	167357.8891	523400.1445	Lc =	463.67'	V =	55 MPH		
	ST	2910+45.05	167435.6041	523562.4853	Ls2 =	180.00'				
TRACK AHEAD									706.94'	N 65° 16' 42'' E
CURVE E4-207	TS	2917+51.99	167731.2537	524204.6334	Ls1 =	120.00'				
	SC	2918+71.99	167781.9474	524313.3987	I =	03° 29' 25'' LT	Ea =	1.00''		
	PI	2919+42.40	167810.8828	524377.5870	Rc =	4280.00'	Eu =	1.09''		
	CS	2920+12.71	167844.6605	524439.3645	Lc =	140.72'	V =	55 MPH		
	ST	2921+32.71	167900.8934	524545.3721	Ls2 =	120.00'				
TRACK AHEAD									180.05'	N 61° 47' 17'' E
CURVE E4-208	TS	2923+12.76	167986.0092	524704.0333	Ls1 =	120.00'				
	SC	2924+32.76	168042.2421	524810.0409	I =	04° 14' 29'' RT	Ea =	1.00''		
	PI	2925+31.26	168089.3002	524896.5740	Rc =	4280.00'	Eu =	1.09''		
	CS	2926+29.60	168128.8047	524986.8061	Lc =	196.84'	V =	55 MPH		
	ST	2927+49.60	168178.0679	525096.2268	Ls2 =	120.00'				
TRACK AHEAD									226.45'	N 66° 01' 46'' E
CURVE E4-209A CURVE E4-209B	TS	2929+76.05	168270.0646	525303.1421	LS1 =	160.00'				
	SC1	2931+36.05	168336.0889	525448.8809			Ea =	0.00''		
					RC1 =	3804.00'	Eu =	2.60/0.10''		
	CS1	2937+48.57	168640.0590	525979.8944	LC1 =	612.52'	V =	50/10 MPH		
	PI	2940+31.29	168698.7720	526267.3741	I =	102° 21' 25'' LT				
	SC2	2937+78.57	168657.5730	526004.2445	LS2 =	30.00'	Ea =	0.00''		
					RC2 =	244.00'	Eu =	1.62''		
	CS2	2941+39.08	168981.6501	526058.6089	LC2 =	360.51'	V =	10 MPH		
	ST	2941+69.08	169006.1744	526041.3388	LS3 =	30.00'				
TRACK AHEAD									50.47'	N 36° 19' 38'' W
CURVE E4-210	TS	2942+19.56	169046.8370	526011.4393	Ls1 =	30.00'				
	SC	2942+49.56	169071.5100	525994.3917	I =	36° 25' 16'' RT	Ea =	0.75''		
	PI	2942+90.55	169104.0352	525969.3811	Rc =	170.00'	Eu =	1.58''		
	CS	2943+27.62	169145.0536	525970.3301	Lc =	78.06'	V =	10 MPH		
	ST	2943+57.62	169175.0317	525969.4974	Ls2 =	30.00'				
TRACK AHEAD									526.51'	N 00° 05' 38'' E
CURVE E4-211	TS	2948+84.13	169701.5418	525970.3598	Ls1 =	30.00'				
	SC	2949+14.13	169731.5416	525970.3099	I =	05° 16' 51'' LT	Ea =	0.75''		
	PI	2949+68.95	169786.3633	525970.4987	Rc =	1514.00'	Eu =	0.88''		
	CS	2950+23.67	169840.9518	525965.4438	Lc =	109.54'	V =	25 MPH		
	ST	2950+53.67	169870.8376	525962.8303	Ls2 =	30.00'				
TRACK AHEAD									147.40'	N 05° 11' 13'' W

NO.	DATE	BY	CHECK	DESIGN	REVISION / SUBMITTAL

AECOM

90% SUBMISSION - 01/22/16

METROPOLITAN COUNCIL

SOUTHWEST Green Line LRT Extension

CIVIL - VOLUME 3B
TRACK
ALIGNMENT DATA
SHEET 7

DISCIPLINE: TRACK

SHEET NAME: E4-TRK-ALG-001

SHEET 19 OF 420

Jan, 18 2016 10:09 am v:\3400_ADC\CAD\00_EAST\PLANSHEETS\TRACK\E4-TRK-ALG.dwg By: V-BurrellM

TRACK 2 ALIGNMENT

DESCRIPTION	POINT DESC.	STATIONING	COORDINATES		SPIRAL AND CURVE DATA / EQUATIONS				TANGENT	
			NORTHING	EASTING					DISTANCE	BEARING
CURVE E4-212	TS	2952+01.07	170017.6323	525949.5046	Ls1 =	120.00'				
	SC	2953+21.07	170137.3187	525948.2396	I =	95° 24' 52'' RT	Ea =	3.50''		
	PI	2955+38.40	170353.5841	525919.0075	Rc =	250.00'	Eu =	2.84''		
	CS	2956+17.39	170343.1585	526136.9905	Lc =	296.32'	V =	20 MPH		
	ST	2957+37.39	170352.2456	526256.3381	Ls2 =	120.00'				
TRACK AHEAD									324.26'	S 89° 46' 22'' E
CURVE E4-213	TS	2960+61.66	170350.9589	526580.5977	Ls1 =	35.00'				
	SC	2960+96.66	170350.1741	526615.5842	I =	25° 00' 02'' RT	Ea =	1.00''		
	PI	2961+49.25	170350.6114	526668.1879	Rc =	316.00'	Eu =	1.82''		
	CS	2961+99.54	170327.6073	526715.4970	Lc =	102.88'	V =	15 MPH		
	ST	2962+34.54	170313.2785	526747.4244	Ls2 =	35.00'				
STATION EQUATION	POT	2962+34.54 BK								
		207+24.69 AH								
TRACK AHEAD									19.20'	S 64° 46' 20'' E
TIE IN	EP	207+05.49	170305.0964	526764.7904						

Jan, 18 2016 10:09 am v:\3400_ADC\CAD\00_EAST\PLANSHEETS\TRACK\E4-TRK-ALG.dwg By: V-BurrellM

NO.	DATE	BY	CHECK	DESIGN	REVISION / SUBMITTAL

AECOM

90% SUBMISSION - 01/22/16

METROPOLITAN COUNCIL

SOUTHWEST Green Line LRT Extension

CIVIL - VOLUME 3B
TRACK
ALIGNMENT DATA
SHEET 8

DISCIPLINE: TRACK

SHEET NAME: E4-TRK-ALG-002

SHEET 20 OF 420

TRACK 1 ALIGNMENT

DESCRIPTION	POINT DESC.	STATIONING	COORDINATES		SPIRAL AND CURVE DATA / EQUATIONS				TANGENT	
			NORTHING	EASTING					DISTANCE	BEARING
TIE IN	BP	1839+97.38	163227.0650	518084.6118						
TRACK AHEAD									242.68'	N 27° 28' 22'' E
CURVE E4-100	TS	1842+40.06	163442.3808	518196.5675	Ls1 =	130.00'				
	SC	1843+70.06	163557.1846	518257.5514	I =	18° 25' 45'' RT	Ea =	2.00''		
	PI	1847+04.18	163854.1616	518410.6772	Rc =	2460.00'	Eu =	2.02''		
	CS	1850+31.31	164085.8560	518651.4270	Lc =	661.25'	V =	50 MPH		
	ST	1851+61.31	164177.1377	518743.9829	Ls2 =	130.00'				
TRACK AHEAD									101.07'	N 45° 54' 06'' E
CURVE E4-101	TS	1852+62.39	164247.4724	518816.5670	Ls1 =	80.00'				
	SC	1853+42.39	164302.4937	518874.6360	I =	09° 17' 18'' RT	Ea =	2.00''		
	PI	1853+99.07	164342.5904	518914.7271	Rc =	1190.00'	Eu =	2.05''		
	CS	1854+55.30	164374.2187	518961.7876	Lc =	112.91'	V =	35 MPH		
	ST	1855+35.30	164420.6179	519026.9525	Ls2 =	80.00'				
STATION EQUATION	ST	1855+35.30 BK								
		1855+26.63 AH								
TRACK AHEAD									393.18'	N 55° 11' 24'' E
CURVE E4-102	TS	1859+19.82	164645.0676	519349.7740	Ls1 =	70.00'				
	SC	1859+89.82	164684.3010	519407.7407	I =	15° 45' 42'' RT	Ea =	2.00''		
	PI	1860+83.57	164738.5510	519484.2292	Rc =	930.00'	Eu =	1.83''		
	CS	1861+75.65	164768.3241	519573.1511	Lc =	185.84'	V =	30 MPH		
	ST	1862+45.65	164791.9963	519639.0223	Ls2 =	70.00'				
STATION EQUATION	ST	1862+45.65 BK								
		1862+39.05 AH								
TRACK AHEAD									947.28'	N 70° 57' 06'' E
CURVE E4-103	TS	1871+86.34	165101.1560	520534.4371	Ls1 =	200.00'				
	SC	1873+86.34	165169.8154	520722.2548	I =	24° 06' 48'' LT	Ea =	3.50''		
	PI	1876+81.66	165262.8124	521002.6400	Rc =	1850.00'	Eu =	2.98''		
	CS	1879+64.92	165467.4997	521215.6361	Lc =	578.59'	V =	55 MPH		
	ST	1881+64.92	165601.6433	521363.9436	Ls2 =	200.00'				
STATION EQUATION	ST	1881+64.92 BK								
		1881+70.90 AH								
TRACK AHEAD									179.50'	N 46° 50' 18'' E
NO. 8 LH CROSSOVER	PITO	1883+50.40	165724.4320	521494.8762						
TRACK AHEAD									20.93'	N 46° 50' 18'' E
	PS	1883+71.33	165738.7494	521510.1431						
TRACK AHEAD									334.67'	N 46° 50' 18'' E
NO. 8 RH CROSSOVER	PS	1887+06.00	165967.6805	521754.2580						
TRACK AHEAD									20.93'	N 46° 50' 18'' E
	PITO	1887+26.93	165981.9979	521769.5249						
TRACK AHEAD									1433.28'	N 46° 50' 18'' E
STATION EQUATION		1897+57.09 BK								
		1897+57.55 AH								
TRACK AHEAD									403.12'	N 46° 50' 18'' E

DESCRIPTION	POINT DESC.	STATIONING	COORDINATES		SPIRAL AND CURVE DATA / EQUATIONS				TANGENT	
			NORTHING	EASTING					DISTANCE	BEARING
CURVE E4-106	TS	1901+60.67	166962.4424	522814.9966	Ls1 =	180.00'				
	SC	1903+40.67	167083.5787	522948.1137	I =	18° 26' 24'' RT	Ea =	3.00''		
	PI	1905+75.42	167246.1535	523117.5246	Rc =	2000.00'	Eu =	2.99''		
	CS	1908+04.34	167341.8903	523331.9193	Lc =	463.67'	V =	55 MPH		
	ST	1909+84.34	167419.6053	523494.2602	Ls2 =	180.00'				
STATION EQUATION	ST	1909+84.34 BK								
		1909+76.39 AH								
TRACK AHEAD									775.18'	N 65° 16' 42'' E
CURVE E4-107	TS	1917+51.57	167743.7922	524198.3909	Ls1 =	120.00'				
	SC	1918+71.57	167794.4859	524307.1563	I =	03° 29' 25'' LT	Ea =	1.00''		
	PI	1919+41.97	167823.4214	524371.3446	Rc =	4280.00'	Eu =	1.09''		
	CS	1920+12.29	167857.1991	524433.1221	Lc =	140.72'	V =	55 MPH		
	ST	1921+32.29	167913.4319	524539.1297	Ls2 =	120.00'				
STATION EQUATION	ST	1921+32.29 BK								
		1921+33.14 AH								
TRACK AHEAD									180.14'	N 61° 47' 17'' E
CURVE E4-108	TS	1923+13.28	167998.5912	524697.8719	Ls1 =	120.00'				
	SC	1924+33.28	168054.8240	524803.8795	I =	04° 14' 29'' RT	Ea =	1.00''		
	PI	1925+31.78	168101.8821	524890.4126	Rc =	4280.00'	Eu =	1.09''		
	CS	1926+30.12	168141.3866	524980.6447	Lc =	196.84'	V =	55 MPH		
	ST	1927+50.12	168190.6498	525090.0654	Ls2 =	120.00'				
STATION EQUATION	ST	1927+50.12 BK								
		1927+49.08 AH								
TRACK AHEAD									226.96'	N 66° 01' 46'' E
CURVE E4-109A CURVE E4-109B	TS	1929+76.05	168282.8571	525297.4544	LS1 =	160.00'				
	SC1	1931+36.05	168348.8852	525443.1913			Ea =	0.00''		
					RC1 =	3790.00'	Eu =	2.61''/0.10''		
	CS1	1937+45.95	168651.5744	525971.9302	LC1 =	609.91'	V =	50/10 MPH		
	PI	1940+13.89	168704.4959	526245.7879	I =	102° 21' 25'' LT				
	SC2	1937+75.95	168669.1182	525996.2580	LS2 =	30.00'	Ea =	0.00''		
					RC2 =	230.00'	Eu =	1.72''		
	CS2	1941+14.06	168973.3439	526047.2927	LC2 =	338.11'	V =	10 MPH		
	ST	1941+44.06	168997.8892	526030.0536	LS3 =	30.00'				
STATION EQUATION	ST	1941+44.06 BK								
		1941+69.09 AH								
TRACK AHEAD									50.47'	N 36° 19' 38'' W
CURVE E4-110	TS	1942+19.56	169038.5474	526000.1573	Ls1 =	30.00'				
	SC	1942+49.56	169063.1835	525983.0537	I =	36° 25' 16'' RT	Ea =	0.75''		
	PI	1942+95.16	169099.4523	525955.3736	Rc =	184.00'	Eu =	1.40''		
	CS	1943+36.52	169145.0683	525956.2631	Lc =	86.96'	V =	10 MPH		
	ST	1943+66.52	169175.0497	525955.4974	Ls2 =	30.00'				
STATION EQUATION	ST	1943+66.52 BK								
		1943+57.61 AH								
TRACK AHEAD									526.52'	N 00° 05' 38'' E

NO.	DATE	BY	CHECK	DESIGN	REVISION / SUBMITTAL

AECOM

90% SUBMISSION - 01/22/16

METROPOLITAN COUNCIL

SOUTHWEST Green Line LRT Extension

CIVIL - VOLUME 3B
TRACK
ALIGNMENT DATA
SHEET 9

DISCIPLINE: TRACK

SHEET NAME: E4-TRK-ALG-003

SHEET 21 OF 420

Jan, 18 2016 10:09 am V:\3400_ADC\CAD\00_EAST\PLANSHEETS\TRACK\E4-TRK-ALG.dwg By: V-BurrellM

TRACK 1 ALIGNMENT

DESCRIPTION	POINT DESC.	STATIONING	COORDINATES		SPIRAL AND CURVE DATA / EQUATIONS				TANGENT	
			NORTHING	EASTING					DISTANCE	BEARING
CURVE E4-111	TS	1948+84.13	169701.5647	525956.3598	Ls1 =	30.00'				
	SC	1949+14.13	169731.5646	525956.3090	I =	05° 16' 51'' LT	Ea =	0.75''		
	PI	1949+68.31	169785.7406	525956.4977	Rc =	1500.00'	Eu =	0.90''		
	CS	1950+22.38	169839.6860	525951.5002	Lc =	108.25'	V =	25 MPH		
	ST	1950+52.38	169869.5719	525948.8877	Ls2 =	30.00'				
STATION EQUATION	ST	1950+52.38 BK								
		1950+53.67 AH								
TRACK AHEAD									147.35'	N 05° 11' 13'' W
CURVE E4-112	TS	1952+01.03	170016.3216	525935.5660	Ls1 =	120.00'				
	SC	1953+21.03	170136.0363	525933.7253	I =	95° 24' 52'' RT	Ea =	3.50''		
	PI	1955+55.80	170369.6458	525903.4919	Rc =	266.00'	Eu =	2.45''		
	CS	1956+43.99	170359.7220	526138.8406	Lc =	322.97'	V =	20 MPH		
	ST	1957+63.99	170368.2381	526258.2662	Ls2 =	120.00'				
STATION EQUATION	ST	1957+63.99 BK								
		1957+39.26 AH								
TRACK AHEAD									320.07'	S 89° 46' 22'' E
CURVE E4-113	TS	1960+59.33	170366.9680	526578.3341	Ls1 =	35.00'				
	SC	1960+94.33	170366.2144	526613.3217	I =	24° 59' 51'' RT	Ea =	1.00''		
	PI	1961+50.46	170366.6064	526669.4606	Rc =	332.00'	Eu =	1.82''		
	CS	1962+04.18	170342.1264	526719.9824	Lc =	109.85'	V =	15 MPH		
	ST	1962+39.18	170327.7708	526751.8981	Ls2 =	35.00'				
STATION EQUATION	POT	1963+10.43 BK								
		106+64.00 AH								
TRACK AHEAD									0.00'	S 64° 46' 31'' E
TIE IN	EP	106+64.00	170297.4062	526816.3539						

Jan, 18 2016 10:10 am V:\3400_ADC\CAD\00_EAST\PLANSHEETS\TRACK\E4-TRK-ALG.dwg By: V-BurrellM

NO.	DATE	BY	CHECK	DESIGN	REVISION / SUBMITTAL

AECOM

90% SUBMISSION - 01/22/16

METROPOLITAN COUNCIL

SOUTHWEST Green Line LRT Extension

CIVIL - VOLUME 3B
TRACK
ALIGNMENT DATA
SHEET 10

DISCIPLINE: TRACK

SHEET NAME: E4-TRK-ALG-004

SHEET 22 OF 420

RAIL TYPE | GENERAL INFORMATION | ALIGNMENT DATA | DESIGN SPEED | STRUCT. TYPE | TRK 2 PROFILE DATA

TRK 1: 115 RE | PREMIUM 115 RE | 115 RE
TRK 2: 115 RE | PREMIUM 115 RE | 115 RE

TRK 1: BP: 1496+00.21 | 11TH AVE S | STA BK:1509+52.95 STA AHD:1509+53.19 | 8TH AVE S | STA BK:1519+41.76 STA AHD:1519+42.12 | 5TH AVE S | TS: 1521+83.50 | SC: 1522+93.50 | CS: 1524+23.60 | ST: 1525+33.98 STA BK:1525+33.60 STA AHD:1525+33.98

DOWNTOWN HOPKINS STATION

TRK 2: BP: 2496+00.21 | TS: 2501+94 | SC: 2502+84 | CS: 2503+94.01 | ST: 2504+84.01 | TS: 2506+63.18 | SC: 2507+53.18 | CS: 2508+63.19 | ST: 2509+53.19 | TS: 2514+22.19 | SC: 2514+72.19 | CS: 2515+79.27 | ST: 2516+29.27 | TS: 2517+35.04 | SC: 2517+85.04 | CS: 2518+92.12 | ST: 2519+42.12 | TS: 2521+83.69 | SC: 2522+93.69 | CS: 2524+23.79 | ST: 2525+33.79

TRK 1: E1–104

TRK 2: E1–200 | E1–201 | E1–202 | E1–203 | E1–204

55 MPH

55 MPH | 40 MPH | 55 MPH | 40 MPH | 55 MPH

TIE AND BALLAST TRK | CROSSING PANELS ON TIE AND BALLAST TRK | TIE AND BALLAST TRK | CROSSING PANELS TIE AND BALLAST TRK | TIE AND BALLAST TRK | CROSSING PANEL ON TIE AND BALLAST TRK | TIE AND BALLAST TRK | CROSSING PANELS TIE AND BALLAST TRK | TIE AND BALLAST TRK

PVI STA: 2497+50.00
PVI ELEV: 913.05
AD: –0.501
100.00' VC

PVI STA: 2503+60.00
PVI ELEV: 916.10
AD: 1.139
100.00' VC

PVI STA: 2508+00.00
PVI ELEV: 923.31
AD: –1.454
200.00' VC

PVI STA: 2516+00.00
PVI ELEV: 924.78
AD: –0.981
120.00' VC

PVI STA: 2521+00.00
PVI ELEV: 920.80
AD: 1.034
100.00' VC

BP: 2496+00.21
EL: 911.55

BVCS: 2497+00.00
BVCE: 912.54
EVCS: 2498+00.00
EVCE: 913.30

BVCS: 2503+10.00
BVCE: 915.85
EVCS: 2504+10.00
EVCE: 916.91

BVCS: 2507+00.00
BVCE: 921.67
EVCS: 2509+00.00
EVCE: 923.49

BVCS: 2515+40.00
BVCE: 924.67
EVCS: 2516+60.00
EVCE: 924.30

BVCS: 2520+50.00
BVCE: 921.20
EVCS: 2521+50.00
EVCE: 920.92

1.00% | 0.50% | 1.64% | 0.18% | –0.80% | 0.24%

980 | 960 | 940 | 920 | 900

2498+00 | 2500+00 | 2502+00 | 2504+00 | 2506+00 | 2508+00 | 2510+00 | 2512+00 | 2514+00 | 2516+00 | 2518+00 | 2520+00 | 2522+00 | 2524+00 | 2526+00

NO.	DATE	BY	CHECK	DESIGN	REVISION / SUBMITTAL

AECOM

90% SUBMISSION - 01/22/16

METROPOLITAN COUNCIL

SOUTHWEST Green Line LRT Extension

CIVIL - VOLUME 3B
TRACK
TRACK CHART
SHEET 1

DISCIPLINE: TRACK

SHEET NAME: E1-TRK-CHT-001

SHEET 23 OF 420

Jan, 18 2016 10:16 am V:\3400_ADC\CAD\00_EAST\PLANSHEETS\TRACK\E1-TRK-CHT.dwg By: V-BurrellM

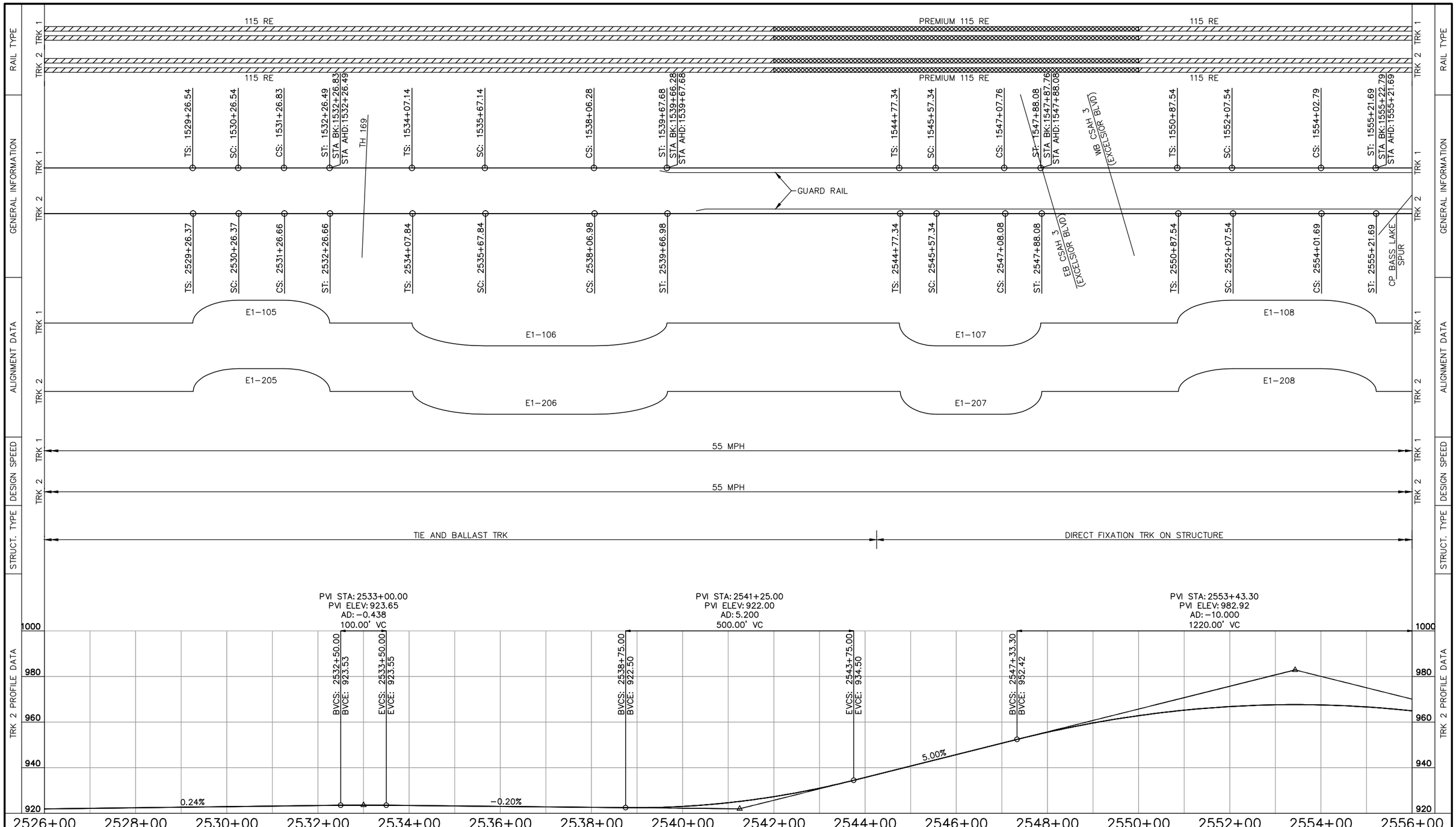

NO.	DATE	BY	CHECK	DESIGN	REVISION / SUBMITTAL

AECOM

90% SUBMISSION - 01/22/16

METROPOLITAN COUNCIL

SOUTHWEST Green Line LRT Extension

CIVIL - VOLUME 3B
TRACK
TRACK CHART
SHEET 2

DISCIPLINE: TRACK

SHEET NAME: E1-TRK-CHT-002

SHEET 24 OF 420

Jan, 18 2016 10:16 am V:\3400_ADC\CAD\00_EAST\PLANSHEETS\TRACK\E1-TRK-CHT.dwg By: V-BurrellM

RAIL TYPE | GENERAL INFORMATION | ALIGNMENT DATA | DESIGN SPEED | STRUCT. TYPE | TRK 2 PROFILE DATA

TRK 1 / TRK 2

115 RE | PREMIUM 115 RE | 115 RE | PREMIUM 115 RE | 115 RE

CP BASS LAKE SPUR
TS: 1556+94.10 | SC: 1557+84.10 | CS: 1560+08.26 | ST: 1560+98.99 | STA BK: 1560+98.26 | STA AHD: 1560+98.99

STA BK: 1574+33.55 | STA AHD: 1574+33.90

CSAH 20 (BLAKE RD)

STA BK: 1584+93.47 | STA AHD: 1584+93.82

GUARD RAIL

BLAKE STATION

TS: 2556+94.10 | SC: 2557+84.10 | CS: 2560+08.99 | ST: 2560+98.99 | TS: 2569+13.97 | SC: 2569+63.97 | CS: 2570+71.05 | ST: 2571+21.05 | TS: 2572+26.82 | SC: 2572+76.82 | CS: 2573+83.90 | ST: 2574+33.90 | TS: 2579+73.90 | SC: 2580+23.90 | CS: 2581+30.98 | ST: 2581+80.98 | TS: 2582+86.74 | SC: 2583+36.74 | CS: 2584+43.82 | ST: 2584+93.82

E1–109 | E1–209 | E1–210 | E1–211 | E1–212 | E1–213

55 MPH

55 MPH | 40 MPH | 55 MPH | 40 MPH | 55 MPH | 40 MPH | 55 MPH | 40 MPH | 55 MPH

DIRECT FIXATION TRK ON STRUCTURE | TIE AND BALLAST TRK | CROSSING PANEL ON TIE AND BALLAST TRK | TIE AND BALLAST TRK | CROSSING PANELS TIE AND BALLAST TRK | TIE AND BALLAST TRK

PVI STA: 2564+60.00
PVI ELEV: 927.08
AD: 4.526
500.00' VC

BVCS: 2562+10.00
BVCE: 939.58

EVCS: 2567+10.00
EVCE: 925.90

EVCS: 2559+53.30
EVCE: 952.42

PVI STA: 2553+43.30
PVI ELEV: 982.92
AD: –10.000
1220.00' VC

–5.00%

–0.47%

980 | 960 | 940 | 920 | 900

2556+00 | 2558+00 | 2560+00 | 2562+00 | 2564+00 | 2566+00 | 2568+00 | 2570+00 | 2572+00 | 2574+00 | 2576+00 | 2578+00 | 2580+00 | 2582+00 | 2584+00 | 2586+00

NO.	DATE	BY	CHECK	DESIGN	REVISION / SUBMITTAL

AECOM

90% SUBMISSION - 01/22/16

METROPOLITAN COUNCIL

SOUTHWEST Green Line LRT Extension

CIVIL - VOLUME 3B
TRACK
TRACK CHART
SHEET 3

DISCIPLINE: TRACK

SHEET NAME: E1-TRK-CHT-003

SHEET 25 OF 420

Jan, 18 2016 10:16 am V:\3400_ADC\CAD\00_EAST\PLANSHEETS\TRACK\E1-TRK-CHT.dwg By: V-BurrellM

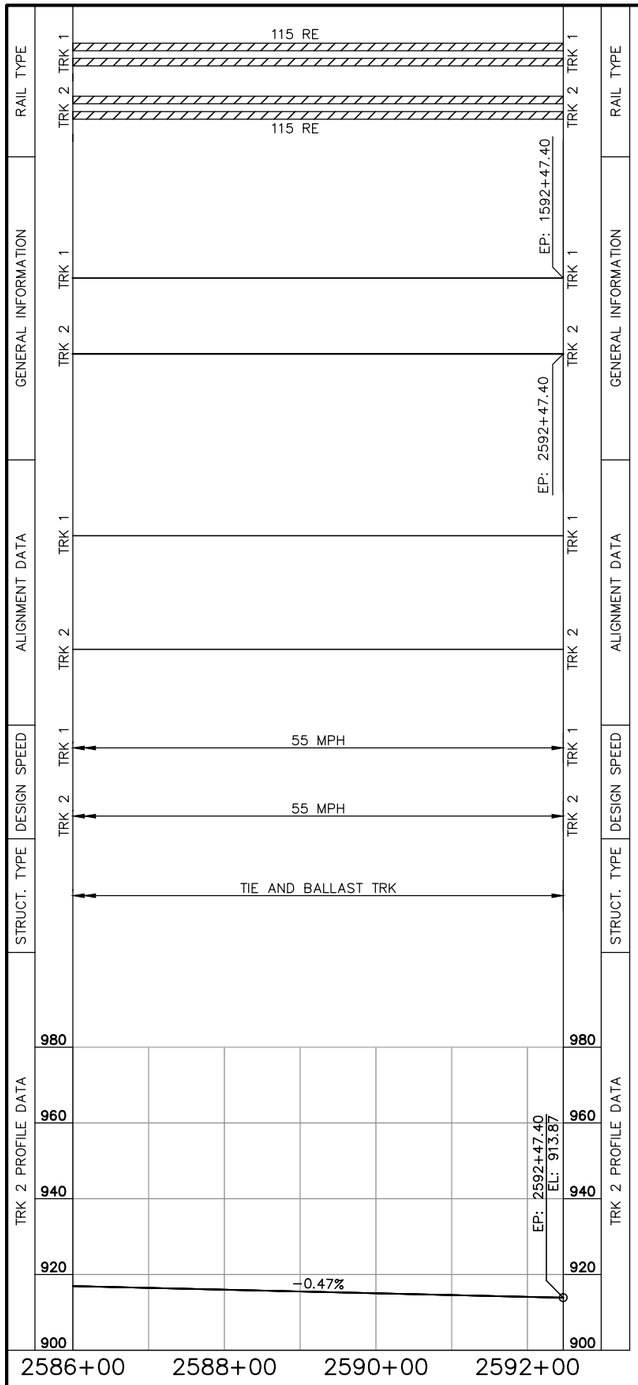

NO.	DATE	BY	CHECK	DESIGN	REVISION / SUBMITTAL

AECOM

90% SUBMISSION - 01/22/16

METROPOLITAN COUNCIL

SOUTHWEST Green Line LRT Extension

CIVIL - VOLUME 3B
TRACK
TRACK CHART
SHEET 4

DISCIPLINE: TRACK

SHEET NAME: E1-TRK-CHT-004

SHEET 26 OF 420

Jan, 18 2016 10:16 am V:\3400_ADC\CAD\00_EAST\PLANSHEETS\TRACK\E1-TRK-CHT.dwg By: V-BurrellM

STRUCT. TYPE	DESIGN SPEED	ALIGNMENT DATA		GENERAL INFORMATION		RAIL TYPE	
		TRK 2	TRK 1	TRK 2	TRK 1	TRK 2	TRK 1

NOTE:
SEE SHEET E1-TRK-CHT-001 FOR RAIL TYPE, GENERAL INFORMATION, ALIGNMENT DATA, DESIGN SPEED AND STRUCTURE TYPE

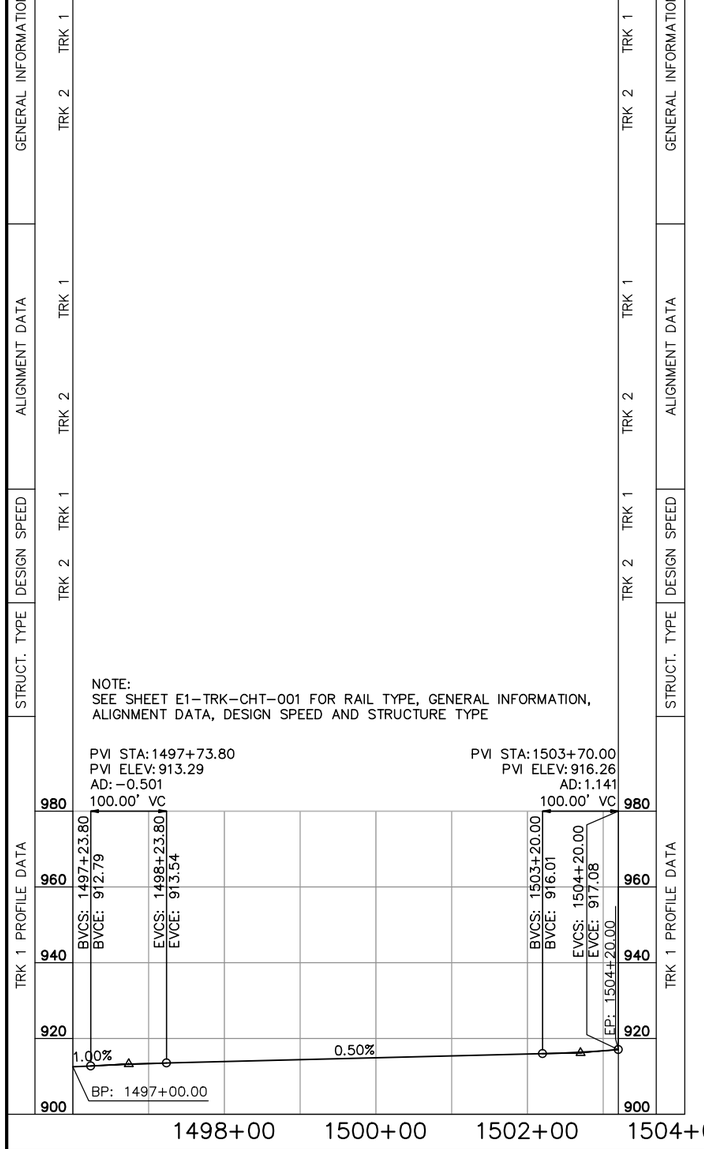

STRUCT. TYPE	DESIGN SPEED	ALIGNMENT DATA		GENERAL INFORMATION		RAIL TYPE	
		TRK 2	TRK 1	TRK 2	TRK 1	TRK 2	TRK 1

NO.	DATE	BY	CHECK	DESIGN	REVISION / SUBMITTAL

AECOM

90% SUBMISSION - 01/22/16

METROPOLITAN COUNCIL

SOUTHWEST Green Line LRT Extension

CIVIL - VOLUME 3B
TRACK
TRACK CHART
SHEET 5

DISCIPLINE: TRACK

SHEET NAME: E1-TRK-CHT-005

SHEET 27 OF 420

Jan, 18 2016 10:17 am V:\3400_ADC\CAD\00_EAST\PLANSHEETS\TRACK\E1-TRK-CHT.dwg By: V-BurrellM

RAIL TYPE | GENERAL INFORMATION | ALIGNMENT DATA | DESIGN SPEED | STRUCT. TYPE | TRK 2 PROFILE DATA

TRK 1: 115 RE; PREMIUM 115 RE
TRK 2: 115 RE; PREMIUM 115 RE

BP: 1595+00.00
BP: 2595+00.00
MINNEHAHA CREEK BRIDGE
GUARD RAIL
PS STA 1624+36.58
PS STA 2624+36.58

55 MPH

TIE AND BALLAST TRK ON STRUCTURE
TIE AND BALLAST TRK
TIE AND BALLAST TRK
NO 8 DOUBLE CROSSOVER ON TIE AND BALLAST TRK

PVI STA: 2597+00.00
PVI ELEV: 912.93
AD: 0.344
100.00' VC

PVI STA: 2622+50.00
PVI ELEV: 909.71
AD: −0.533
100.00' VC

BP: 2595+00.00 EL: 913.87
BVCS: 2596+50.00 BVCE: 913.16
EVCS: 2597+50.00 EVCE: 912.86
BVCS: 2622+00.00 BVCE: 909.77
EVCS: 2623+00.00 EVCE: 909.38

−0.47%
−0.13%
−0.66%

960 | 940 | 920 | 900 | 880

2596+00 2598+00 2600+00 2602+00 2604+00 2606+00 2608+00 2610+00 2612+00 2614+00 2616+00 2618+00 2620+00 2622+00 2624+00

NO.	DATE	BY	CHECK	DESIGN	REVISION / SUBMITTAL

AECOM

90% SUBMISSION - 01/22/16

METROPOLITAN COUNCIL

SOUTHWEST Green Line LRT Extension

CIVIL - VOLUME 3B
TRACK
TRACK CHART
SHEET 6

DISCIPLINE: TRACK

SHEET NAME: E2-TRK-CHT-001

SHEET 28 OF 420

Jan, 18 2016 10:18 am V:\3400_ADC\CAD\00_EAST\PLANSHEETS\TRACK\E2-TRK-CHT.dwg By: V-BurrellM

RAIL TYPE | GENERAL INFORMATION | ALIGNMENT DATA | DESIGN SPEED | STRUCT. TYPE | TRK 2 PROFILE DATA

TRK 1: PREMIUM 115 RE | 115 RE | PREMIUM 115 RE | 115 RE

TRK 2: PREMIUM 115 RE | 115 RE | PREMIUM 115 RE | 115 RE

PS STA 1625+90.00 | TS: 1628+49.93 | SC: 1629+49.93 | CS: 1630+95.07 | ST: 1631+93.34 | STA BK:1631+95.07 | STA AHD:1631+93.34 | LOUISIANA AVE S | TS: 1634+99.26 | SC: 1635+69.26 | CS: 1636+79.11 | ST: 1637+51.92 | STA BK:1637+49.11 | STA AHD:1637+51.92 | TS: 1642+41.94 | SC: 1643+01.94 | CS: 1644+64.31 | ST: 1645+24.31 | TS: 1650+20.28 | MN&S RR | SC: 1651+40.28 | CS: 1653+62.39 | STA BK:1654+82.39 | STA AHD:1654+84.93 | ST: 1654+84.93

GUARD RAIL

LOUISIANA STATION

PS STA 2625+90.00 | TS: 2628+49.06 | SC: 2629+49.06 | CS: 2630+94.20 | ST: 2631+94.20 | TS: 2636+66.76 | SC: 2637+26.76 | CS: 2637+89.95 | ST: 2638+49.95 | TS: 2644+13.37 | SC: 2644+93.37 | SOUTHERLY CONNECTOR | CS: 2646+82.45 | ST: 2647+62.45 | TS: 2648+61.55 | SC: 2650+11.55 | CS: 2653+58.66

E2–100 | E2–101 | E2–102 | E2–103

E2–200 | E2–201 | E2–202 | E2–203

TRK 1	TRK 2
55 MPH	55 MPH
45 MPH	45 MPH
35 MPH	55 MPH
30 MPH	30 MPH
55 MPH	55 MPH
40 MPH	40 MPH
55 MPH	55 MPH

NO 8 DOUBLE CROSSOVER ON TIE AND BALLAST TRK

TIE AND BALLAST TRK

TIE AND BALLAST TRK ON STRUCTURE

TIE AND BALLAST TRK

CROSSING PANELS ON TIE AND BALLAST TRK

TIE AND BALLAST TRK

CROSSING PANELS ON TIE AND BALLAST TRK

TIE AND BALLAST TRK

PVI STA: 2627+00.00
PVI ELEV: 906.75
AD: 1.779
120.00' VC
BVCS: 2626+40.00
BVCE: 907.14
EVCS: 2627+60.00
EVCE: 907.42

PVI STA: 2633+39.16
PVI ELEV: 913.90
AD: −5.120
420.00' VC
BVCS: 2631+29.16
BVCE: 911.55
EVCS: 2635+49.16
EVCE: 905.50

PVI STA: 2637+90.00
PVI ELEV: 895.87
AD: 3.687
100.00' VC
BVCS: 2637+40.00
BVCE: 897.87
EVCS: 2638+40.00
EVCE: 895.71

PVI STA: 2644+00.00
PVI ELEV: 893.96
AD: 2.681
100.00' VC
BVCS: 2643+50.00
BVCE: 894.12
EVCS: 2644+50.00
EVCE: 895.14

PVI STA: 2650+70.00
PVI ELEV: 909.83
AD: −1.692
240.00' VC
BVCS: 2649+50.00
BVCE: 906.98
EVCS: 2651+90.00
EVCE: 910.64

−0.66% | 1.12% | −4.00% | −0.31% | 2.37% | 0.68%

960 | 940 | 920 | 900 | 880

2626+00 | 2628+00 | 2630+00 | 2632+00 | 2634+00 | 2636+00 | 2638+00 | 2640+00 | 2642+00 | 2644+00 | 2646+00 | 2648+00 | 2650+00 | 2652+00 | 2654+00

NO.	DATE	BY	CHECK	DESIGN	REVISION / SUBMITTAL

AECOM

90% SUBMISSION - 01/22/16

METROPOLITAN COUNCIL

SOUTHWEST Green Line LRT Extension

CIVIL - VOLUME 3B
TRACK
TRACK CHART
SHEET 7

DISCIPLINE: TRACK

SHEET NAME: E2-TRK-CHT-002

SHEET 29 OF 420

Jan, 18 2016 10:18 am V:\3400_ADC\CAD\00_EAST\PLANSHEETS\TRACK\E2-TRK-CHT.dwg By: V-BurrellM

RAIL TYPE | GENERAL INFORMATION | ALIGNMENT DATA | DESIGN SPEED | STRUCT. TYPE | TRK 2 PROFILE DATA

TRK 1: 115 RE | PREMIUM 115 RE | 115 RE
TRK 2: 115 RE | PREMIUM 115 RE | 115 RE

STA BK:1667+05.42
STA AHD:1667+05.77
WOODDALE AVE S
STA BK:1677+30.34
STA AHD:1677+30.69
WOODDALE STATION

ST: 2655+08.66
TS: 2661+85.84
SC: 2662+35.84
CS: 2663+42.92
ST: 2663+92.92
TS: 2664+98.69
SC: 2665+48.69
CS: 2666+55.77
ST: 2667+05.77
TS: 2672+10.77
SC: 2672+60.77
CS: 2673+67.85
ST: 2674+17.85
TS: 2675+23.61
SC: 2675+73.61
CS: 2676+80.69
ST: 2677+30.69

E2-204 | E2-205 | E2-206 | E2-207

55 MPH

55 MPH | 40 MPH | 55 MPH | 40 MPH | 55 MPH | 40 MPH | 55 MPH | 40 MPH | 55 MPH

TIE AND BALLAST TRK | CROSSING PANELS ON TIE AND BALLAST TRK | TIE AND BALLAST TRK | CROSSING PANELS ON TIE AND BALLAST TRK | TIE AND BALLAST TRK

PVI STA: 2662+70.00
PVI ELEV: 917.94
AD: −0.830
800.00' VC

PVI STA: 2675+00.00
PVI ELEV: 916.06
AD: −0.459
100.00' VC

BVCS: 2658+70.00
BVCE: 915.24
EVCS: 2666+70.00
EVCE: 917.33
BVCS: 2674+50.00
BVCE: 916.13
EVCS: 2675+50.00
EVCE: 915.75

960 | 940 | 920 | 900 | 880

0.68% | −0.15% | −0.61%

2656+00 | 2658+00 | 2660+00 | 2662+00 | 2664+00 | 2666+00 | 2668+00 | 2670+00 | 2672+00 | 2674+00 | 2676+00 | 2678+00 | 2680+00 | 2682+00

NO.	DATE	BY	CHECK	DESIGN	REVISION / SUBMITTAL

AECOM

90% SUBMISSION - 01/22/16

METROPOLITAN COUNCIL

SOUTHWEST Green Line LRT Extension

CIVIL - VOLUME 3B
TRACK
TRACK CHART
SHEET 8

DISCIPLINE: TRACK

SHEET NAME: E2-TRK-CHT-003

SHEET 30 OF 420

Jan, 18 2016 10:18 am V:\3400_ADC\CAD\00_EAST\PLANSHEETS\TRACK\E2-TRK-CHT.dwg By: V-BurrellM

RAIL TYPE

TRK 1: 115 RE

TRK 2: 115 RE

GENERAL INFORMATION

TH 100 SB

TH 100 NB

GUARD RAIL

TS: 2705+85.84
SC: 2706+35.84
CS: 2707+42.92
ST: 2707+92.92
TS: 2708+98.69
SC: 2709+48.69

ALIGNMENT DATA

E2–208

E2–209

DESIGN SPEED

TRK 1: 55 MPH

TRK 2: 55 MPH | 40 MPH | 55 MPH | 40 MPH

STRUCT. TYPE

TIE AND BALLAST TRK | TIE AND BALLAST TRK ON STRUCTURE | TIE AND BALLAST TRK

TRK 2 PROFILE DATA

PVI STA: 2684+55.00
PVI ELEV: 910.21
AD: 0.722
100.00' VC
BVCS: 2684+05.00
BVCE: 910.52
EVCS: 2685+05.00
EVCE: 910.27

PVI STA: 2687+25.00
PVI ELEV: 910.51
AD: −0.886
110.00' VC
BVCS: 2686+70.00
BVCE: 910.45
EVCS: 2687+80.00
EVCE: 910.08

PVI STA: 2691+20.00
PVI ELEV: 907.44
AD: −0.937
120.00' VC
BVCS: 2690+60.00
BVCE: 907.91
EVCS: 2691+80.00
EVCE: 906.42

PVI STA: 2693+95.00
PVI ELEV: 902.73
AD: 0.917
100.00' VC
BVCS: 2693+45.00
BVCE: 903.59
EVCS: 2694+45.00
EVCE: 902.33

PVI STA: 2706+50.00
PVI ELEV: 892.75
AD: 0.058
100.00' VC
BVCS: 2706+00.00
BVCE: 893.14
EVCS: 2707+00.00
EVCE: 892.38

960 / 940 / 920 / 900 / 880

−0.61% | 0.11% | −0.78% | −1.71% | −0.80% | −0.74%

2684+00 | 2686+00 | 2688+00 | 2690+00 | 2692+00 | 2694+00 | 2696+00 | 2698+00 | 2700+00 | 2702+00 | 2704+00 | 2706+00 | 2708+00

NO.	DATE	BY	CHECK	DESIGN	REVISION / SUBMITTAL

AECOM

90% SUBMISSION - 01/22/16

METROPOLITAN COUNCIL

SOUTHWEST Green Line LRT Extension

CIVIL - VOLUME 3B
TRACK
TRACK CHART
SHEET 9

DISCIPLINE: TRACK

SHEET NAME: E2-TRK-CHT-004

SHEET 31 OF 420

Jan, 18 2016 10:18 am V:\3400_ADC\CAD\00_EAST\PLANSHEETS\TRACK\E2-TRK-CHT.dwg By: V-BurrellM

RAIL TYPE | GENERAL INFORMATION | ALIGNMENT DATA | DESIGN SPEED | STRUCT. TYPE | TRK 2 PROFILE DATA

TRK 1 / TRK 2: 115 RE | PREMIUM 115 RE | 115 RE | PREMIUM 115 RE | 115 RE | PREMIUM 115 RE | 115 RE

STA BK:1711+05.42
STA AHD:1711+05.77
BELTLINE BLVD
TS: 1716+22.40
SC: 1716+72.40
CS: 1718+32.24
ST: 1718+80.70
STA BK:1718+82.24
STA AHD:1718+80.70
PS STA 1720+15.71
PS STA 1723+72.55
TS: 1724+17.55
SC: 1725+57.55
CS: 1733+71.64
STA BK:1735+11.64
STA AHD:1735+06.82
ST: 1735+06.82
EP: 1735+52.40

BELTLINE STATION

CS: 2710+55.77
ST: 2711+05.77
TS: 2718+72.92
SC: 2719+42.92
CS: 2720+28.21
ST: 2720+98.21
PS STA 2721+68.14
PS STA 2722+19.14
TS: 2724+15.15
CEDAR LAKE LRT TRAIL
SC: 2725+55.15
CS: 2733+69.24
ST: 2735+09.24
EP: 2735+52.41

E2–110 | E2–111 | E2–210 | E2–211 | E2–209

45 MPH | 55 MPH | 40 MPH | 55 MPH

40 MPH | 55 MPH | 55 MPH | 45 MPH | 55 MPH | 40 MPH | 55 MPH

TIE AND BALLAST TRK | CROSSING PANELS ON TIE AND BALLAST TRK | TIE AND BALLAST TRK | CROSSING PANELS ON TIE AND BALLAST TRK | TIE AND BALLAST TRK | NO 8 RH CROSSOVER ON TIE AND BALLAST TRK | TIE AND BALLAST TRK | NO 8 LH CROSSOVER ON TIE AND BALLAST TRK | TIE AND BALLAST TRK

PVI STA: 2716+60.00
PVI ELEV: 885.30
AD: 1.813
100.00' VC

PVI STA: 2719+15.00
PVI ELEV: 888.04
AD: −0.626
100.00' VC

PVI STA: 2725+36.82
PVI ELEV: 890.83
AD: −0.950
200.00' VC

BVCS: 2716+10.00
BVCE: 885.66
EVCS: 2717+10.00
EVCE: 885.83
BVCS: 2718+65.00
BVCE: 887.50
EVCS: 2719+65.00
EVCE: 888.26
BVCS: 2724+36.82
BVCE: 890.38
EVCS: 2726+36.82
EVCE: 890.33
EP: 2735+52.41
EL: 885.76

940 | 920 | 900 | 880 | 860

−0.74% | 1.08% | 0.45% | −0.50%

2712+00 | 2714+00 | 2716+00 | 2718+00 | 2720+00 | 2722+00 | 2724+00 | 2726+00 | 2728+00 | 2730+00 | 2732+00 | 2734+00

NO.	DATE	BY	CHECK	DESIGN	REVISION / SUBMITTAL

AECOM

90% SUBMISSION - 01/22/16

METROPOLITAN COUNCIL

SOUTHWEST Green Line LRT Extension

CIVIL - VOLUME 3B
TRACK
TRACK CHART
SHEET 10

DISCIPLINE: TRACK

SHEET NAME: E2-TRK-CHT-005

SHEET 32 OF 420

Jan, 18 2016 10:18 am V:\3400_ADC\CAD\00_EAST\PLANSHEETS\TRACK\E2-TRK-CHT.dwg By: V-BurrellM

RAIL TYPE | GENERAL INFORMATION | ALIGNMENT DATA | DESIGN SPEED | STRUCT. TYPE | TRK 2 PROFILE DATA

TRK 1: 115 RE | PREMIUM 115 RE | 115 RE | PREMIUM 115 RE

TRK 2: 115 RE | PREMIUM 115 RE | 115 RE | PREMIUM 115 RE

TRK 1: BP: 1746+00.00 | TS: 1748+92.64 | SC: 1750+42.64 | CS: 1758+53.43 | SC: 1759+03.43 | CS: 1761+82.46 | ST: 1763+45.05 | STA BK:1763+32.46 | STA AHD:1763+45.05 | WB CSAH 25 (W LAKE ST) | TS: 1773+57.82 | SC: 1774+37.82

WEST LAKE STATION

GUARD RAIL AT PORTAL

TRK 2: BP: 2746+00.00 | TS: 2748+98.18 | SC: 2750+48.18 | CS: 2763+49.35 | ST: 2764+29.35 | TS: 2772+28.40 | SC: 2773+48.40

TRK 1: E3-101A | E3-101B | E3-102A

TRK 2: E3-201 | E3-202

DESIGN SPEED

TRK 1: 55 MPH | 50 MPH | 45 MPH | 55 MPH | 30 MPH | 55 MPH | 35 MPH

TRK 2: 55 MPH | 45 MPH | 40 MPH | 55 MPH | 30 MPH | 45 MPH

STRUCT. TYPE

TIE AND BALLAST TRK | CROSSING PANEL ON TIE AND BALLAST TRK | TIE AND BALLAST TRK | CROSSING PANEL ON TIE AND BALLAST TRK | TIE AND BALLAST TRK | DIRECT FIXATION TRK WITH HIGHLY RESILIENT FASTENERS

TRK 2 PROFILE DATA

BP: 2746+00.00
EL: 885.76

−0.50%

PVI STA: 2771+80.47
PVI ELEV: 872.85
AD: −4.500
200.00' VC

BVCS: 2770+80.47
BVCE: 873.35

EVCS: 2772+80.47
EVCE: 867.85

PVI STA: 2776+56.09
PVI ELEV: 849.07
AD: 4.800
250.00' VC

BVCS: 2775+31.09
BVCE: 855.32

−5.00%

920 | 900 | 880 | 860 | 840

2746+00 | 2748+00 | 2750+00 | 2752+00 | 2754+00 | 2756+00 | 2758+00 | 2760+00 | 2762+00 | 2764+00 | 2766+00 | 2768+00 | 2770+00 | 2772+00 | 2774+00 | 2776+00

NO.	DATE	BY	CHECK	DESIGN	REVISION / SUBMITTAL

AECOM

90% SUBMISSION - 01/22/16

METROPOLITAN COUNCIL

SOUTHWEST Green Line LRT Extension

CIVIL - VOLUME 3B
TRACK
TRACK CHART
SHEET 11

DISCIPLINE: TRACK

SHEET NAME: E3-TRK-CHT-001

SHEET 33 OF 420

Jan, 18 2016 10:19 am V:\3400_ADC\CAD\00_EAST\PLANSHEETS\TRACK\E3-TRK-CHT.dwg By: V-BurrellM

RAIL TYPE | GENERAL INFORMATION | ALIGNMENT DATA | DESIGN SPEED | STRUCT. TYPE | TRK 2 PROFILE DATA

TRK 1 / TRK 2

115 RE | PREMIUM 115 RE | 115 RE

CS: 1776+56.21 | SC: 1776+96.21 | CS: 1780+02.96 | ST: 1781+31.39 | STA BK:1781+22.96 | STA AHD:1781+31.39 | TS: 1785+16.16 | SC: 1786+36.16 | CS: 1789+84.40 | ST: 1790+99.50 | STA BK:1791+04.40 | STA AHD:1790+99.50 | CEDAR LAKE PKWY | TS: 1796+31.09 | SC: 1797+11.09 | CS: 1797+94.16 | STA BK:1798+74.16 | STA AHD:1798+73.08 | ST: 1798+73.08 | LAKE OF THE ISLES CEDAR LAKE CHANNEL | TS: 1803+63.77 | SC: 1805+13.77

GUARD RAIL AT PORTAL | GUARD RAIL AT PORTAL

CS: 2780+11.39 | ST: 2781+31.39 | TS: 2785+16.15 | SC: 2786+36.15 | CS: 2789+79.50 | ST: 2790+99.50 | TS: 2795+63.44 | SC: 2796+23.44 | CS: 2799+94.30 | ST: 2800+54.30 | TS: 2803+63.84 | SC: 2805+13.84

E3–102B | E3–103 | E3–104 | E3–105

E3–202 | E3–203 | E3–204 | E3–205

35 MPH | 45 MPH | 55 MPH | 45 MPH | 55 MPH | 45 MPH | 55 MPH | 45 MPH

45 MPH | 55 MPH | 45 MPH | 55 MPH | 45 MPH

DIRECT FIXATION TRK WITH HIGHLY RESILIENT FASTENERS IN TUNNEL

TIE AND BALLAST TRK | DIRECT FIXATION TRK WITH HIGHLY RESILIENT FASTENERS

TIE AND BALLAST TRK WITH RAIL DAMPERS ON STRUCTURE | TIE AND BALLAST TRK

PVI STA: 2776+56.09
PVI ELEV: 849.07
AD: 4.800
250.00' VC

PVI STA: 2797+30.00
PVI ELEV: 844.93
AD: 6.200
220.00' VC

EVCS: 2777+81.09
EVCE: 848.82

BVCS: 2796+20.00
BVCE: 845.15

EVCS: 2798+40.00
EVCE: 851.53

BVCS: 2800+01.21
BVCE: 861.20

PVI STA: 2801+56.21
PVI ELEV: 870.50
AD: –6.247
310.00' VC

EVCS: 2803+11.21
EVCE: 870.11

–0.20% | 6.00% | –0.25%

900 | 880 | 860 | 840 | 820

2776+00 | 2778+00 | 2780+00 | 2782+00 | 2784+00 | 2786+00 | 2788+00 | 2790+00 | 2792+00 | 2794+00 | 2796+00 | 2798+00 | 2800+00 | 2802+00 | 2804+00 | 2806+00

NO.	DATE	BY	CHECK	DESIGN	REVISION / SUBMITTAL

AECOM

90% SUBMISSION - 01/22/16

METROPOLITAN COUNCIL | SOUTHWEST Green Line LRT Extension

CIVIL - VOLUME 3B
TRACK
TRACK CHART
SHEET 12

DISCIPLINE: TRACK | SHEET NAME: E3-TRK-CHT-002

SHEET 34 OF 420

Jan, 18 2016 10:19 am V:\3400_ADC\CAD\00_EAST\PLANSHEETS\TRACK\E3-TRK-CHT.dwg By: V-BurrellM

RAIL TYPE | GENERAL INFORMATION | ALIGNMENT DATA | DESIGN SPEED | STRUCT. TYPE | TRK 2 PROFILE DATA

TRK 1: 115 RE | PREMIUM 115 RE | 115 RE

TRK 2: 115 RE | PREMIUM 115 RE | 115 RE

TRK 1: CS: 1810+81.89 | ST: 1812+39.70 | STA BK:1812+31.89 | STA AHD: 1812+39.70 | TS: 1816+35.67 | SC: 1817+05.67 | CS: 1819+56.80 | ST: 1820+32.43 | STA BK:1820+26.80 | STA AHD:1820+32.43 | W 21ST ST | TS: 1826+32.56 | SC: 1828+02.56

21ST STREET STATION

TRK 2: CS: 2810+81.96 | ST: 2812+31.96 | BURNHAM RD | TS: 2817+37.37 | SC: 2818+37.37 | CS: 2819+68.77 | ST: 2820+68.77 | TS: 2826+56.61 | SC: 2828+26.61

TRK 1: E3–105 | E3–106 | E3–107

TRK 2: E3–205 | E3–206 | E3–207

TRK 1: 45 MPH | 55 MPH | 35 MPH | 55 MPH | 40 MPH

TRK 2: 45 MPH | 55 MPH | 35 MPH | 55 MPH | 40 MPH

TIE AND BALLAST TRK | CROSSING PANEL ON TIE AND BALLAST TRK | TIE AND BALLAST TRK | CROSSING PANEL ON TIE AND BALLAST TRK | TIE AND BALLAST TRK

PVI STA: 2819+00.00
PVI ELEV: 866.19
AD: 0.447
100.00' VC

BVCS: 2818+50.00
BVCE: 866.31

EVCS: 2819+50.00
EVCE: 866.29

PVI STA: 2825+65.00
PVI ELEV: 867.52
AD: 1.238
130.00' VC

BVCS: 2825+00.00
BVCE: 867.39

EVCS: 2826+30.00
EVCE: 868.46

PVI STA: 2828+60.00
PVI ELEV: 871.76
AD: −2.018
200.00' VC

BVCS: 2827+60.00
BVCE: 870.32

EVCS: 2829+60.00
EVCE: 871.18

920 | 900 | 880 | 860 | 840

−0.25% | 0.20% | 1.44% | −0.58%

2806+00 | 2808+00 | 2810+00 | 2812+00 | 2814+00 | 2816+00 | 2818+00 | 2820+00 | 2822+00 | 2824+00 | 2826+00 | 2828+00 | 2830+00

NO.	DATE	BY	CHECK	DESIGN	REVISION / SUBMITTAL

AECOM

90% SUBMISSION - 01/22/16

METROPOLITAN COUNCIL

SOUTHWEST Green Line LRT Extension

CIVIL - VOLUME 3B
TRACK
TRACK CHART
SHEET 13

DISCIPLINE: TRACK

SHEET NAME: E3-TRK-CHT-003

SHEET 35 OF 420

Jan, 18 2016 10:20 am V:\3400_ADC\CAD\00_EAST\PLANSHEETS\TRACK\E3-TRK-CHT.dwg By: V-BurrellM

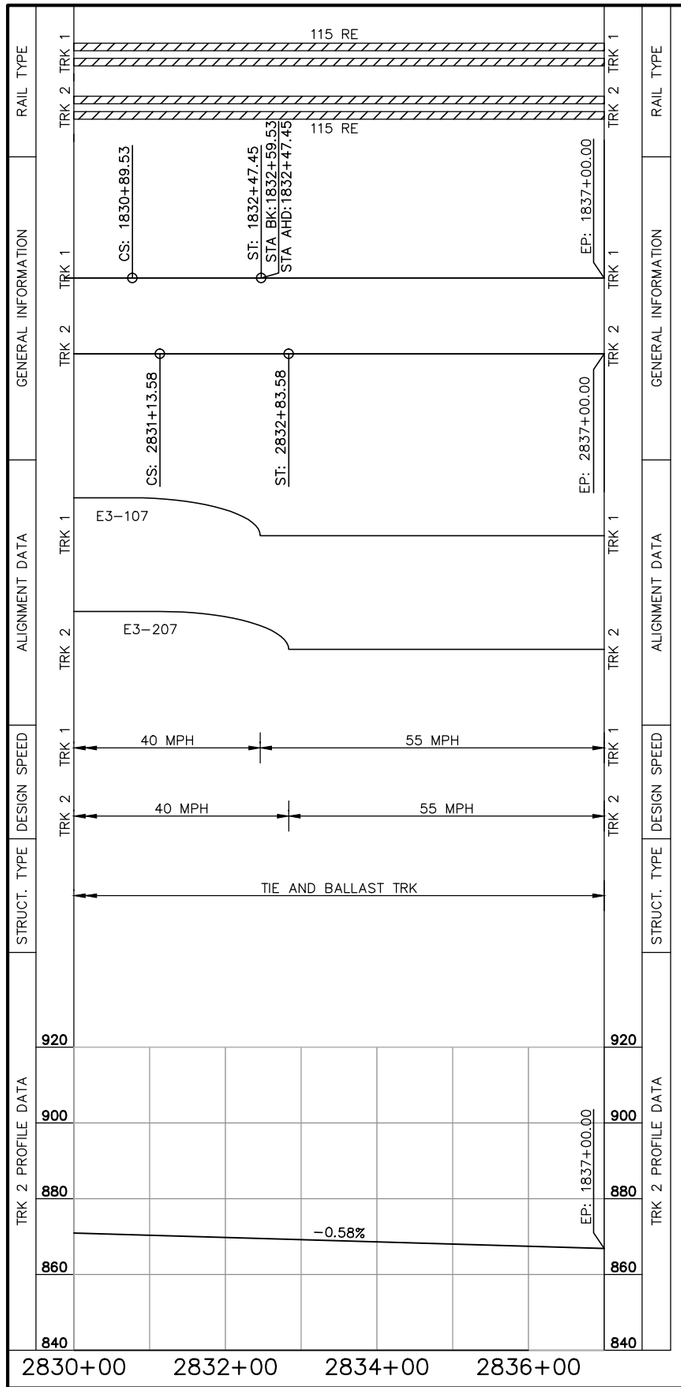

Jan, 18 2016 10:20 am V:\3400_ADC\CAD\00_EAST\PLANSHEETS\TRACK\E3-TRK-CHT.dwg By: V-BurrellM

NO.	DATE	BY	CHECK	DESIGN	REVISION / SUBMITTAL

AECOM

90% SUBMISSION - 01/22/16

METROPOLITAN COUNCIL

SOUTHWEST Green Line LRT Extension

CIVIL - VOLUME 3B
TRACK
TRACK CHART
SHEET 14

DISCIPLINE: TRACK

SHEET NAME: E3-TRK-CHT-004

SHEET 36 OF 420

STRUCT. TYPE	DESIGN SPEED	ALIGNMENT DATA		GENERAL INFORMATION		RAIL TYPE	
		TRK 2	TRK 1	TRK 2	TRK 1	TRK 2	TRK 1

NOTE:
SEE SHEET E3-TRK-CHT-001 & E3-TRK-CHT-002 FOR RAIL TYPE, GENERAL INFORMATION, ALIGNMENT DATA, DESIGN SPEED AND STRUCTURE TYPE

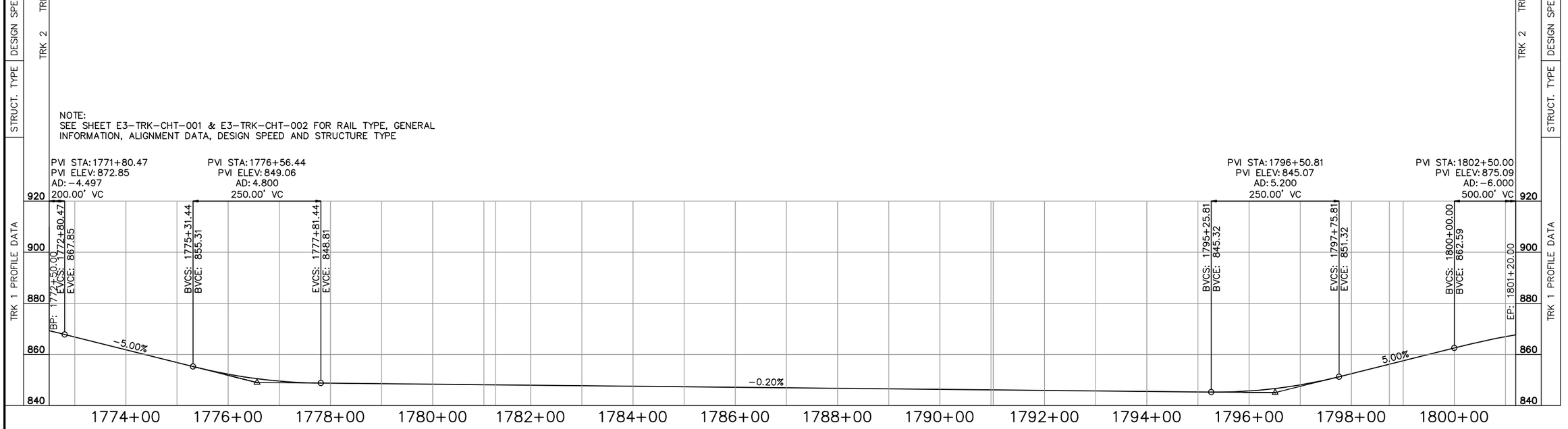

NO.	DATE	BY	CHECK	DESIGN	REVISION / SUBMITTAL

AECOM

90% SUBMISSION - 01/22/16

METROPOLITAN COUNCIL

SOUTHWEST Green Line LRT Extension

CIVIL - VOLUME 3B
TRACK
TRACK CHART
SHEET 15

DISCIPLINE: TRACK

SHEET NAME: E3-TRK-CHT-005

SHEET 37 OF 420

Jan, 18 2016 10:20 am V:\3400_ADC\CAD\00_EAST\PLANSHEETS\TRACK\E3-TRK-CHT.dwg By: V-BurrellM

RAIL TYPE

GENERAL INFORMATION

ALIGNMENT DATA

DESIGN SPEED

STRUCT. TYPE

TRK 2 PROFILE DATA

TRK 1

TRK 2

115 RE

PREMIUM 115 RE

115 RE

115 RE

PREMIUM 115 RE

115 RE

BP: 1839+97.38

TS: 1842+40.06

SC: 1843+70.06

CS: 1850+31.31

ST: 1851+61.31

TS: 1852+62.39

SC: 1853+42.39

CS: 1854+55.30

ST: 1855+26.63

STA BK: 1855+35.30

STA AHD: 1855+26.63

PENN STATION PEDESTRIAN BRIDGE

TS: 1859+19.82

SC: 1859+89.82

CS: 1861+75.65

ST: 1862+39.05

STA BK: 1862+45.65

STA AHD: 1862+39.05

TH 394 BRIDGE

PENN STATION

BP: 2839+97.38

TS: 2842+37.11

SC: 2843+67.11

CS: 2854+27.16

ST: 2855+57.16

TS: 2859+34.90

SC: 2860+14.90

CS: 2862+62.26

ST: 2863+42.26

E4–100

E4–101

E4–102

E4–200

E4–202

55 MPH

50 MPH

55 MPH

35 MPH

55 MPH

30 MPH

55 MPH

55 MPH

50 MPH

55 MPH

35 MPH

55 MPH

TIE AND BALLAST TRK

CROSSING PANEL ON TIE AND BALLAST TRK

TIE AND BALLAST TRK

CROSSING PANEL ON TIE AND BALLAST TRK

TIE AND BALLAST TRK

PVI STA: 2852+50.00
PVI ELEV: 859.64
AD: –0.655
100.00' VC

PVI STA: 2855+00.00
PVI ELEV: 856.55
AD: 0.734
100.00' VC

PVI STA: 2860+00.00
PVI ELEV: 854.05
AD: –0.383
100.00' VC

BP: 2839+97.38
EL: 866.89

BVCS: 2852+00.00
BVCE: 859.92

EVCS: 2853+00.00
EVCE: 859.02

BVCS: 2854+50.00
BVCE: 857.17

EVCS: 2855+50.00
EVCE: 856.30

BVCS: 2859+50.00
BVCE: 854.30

EVCS: 2860+50.00
EVCE: 853.61

–0.58%

–1.23%

–0.50%

–0.88%

900

880

860

840

820

2840+00 2842+00 2844+00 2846+00 2848+00 2850+00 2852+00 2854+00 2856+00 2858+00 2860+00 2862+00 2864+00 2866+00 2868+00

NO.	DATE	BY	CHECK	DESIGN	REVISION / SUBMITTAL

AECOM

90% SUBMISSION - 01/22/16

METROPOLITAN COUNCIL

SOUTHWEST Green Line LRT Extension

CIVIL - VOLUME 3B
TRACK
TRACK CHART
SHEET 16

DISCIPLINE: TRACK

SHEET NAME: E4-TRK-CHT-001

SHEET 38 OF 420

Jan, 18 2016 10:21 am V:\3400_ADC\CAD\00_EAST\PLANSHEETS\TRACK\E4-TRK-CHT.dwg By: V-BurrellM

RAIL TYPE | GENERAL INFORMATION | ALIGNMENT DATA | DESIGN SPEED | STRUCT. TYPE | TRK 2 PROFILE DATA

TRK 1: 115 RE | PREMIUM 115 RE | 115 RE | PREMIUM 115 RE | 115 RE | PREMIUM 115 RE

TRK 2: 115 RE | PREMIUM 115 RE | 115 RE | PREMIUM 115 RE | 115 RE

TRK 1: TS: 1871+86.34 | SC: 1873+86.34 | CS: 1879+64.92 | ST: 1881+70.90 | STA BK: 1881+64.92 | STA AHD: 1881+70.90 | PS STA 1883+71.33 | PS STA 1887+06.00 | LUCE LINE TRAIL BRIDGE | STA BK: 1897+57.09 | STA AHD: 1897+57.55

TRK 2: TH 394 BRIDGE | TS: 2871+89.33 | SC: 2873+89.33 | CS: 2879+67.91 | ST: 2881+67.91 | PS STA 2882+17.91 | PS STA 2888+59.42 | TS: 2891+03.03 | SC: 2891+83.03 | CS: 2892+76.34 | ST: 2893+56.34 | TS: 2895+04.24 | SC: 2895+84.24 | CS: 2896+77.55 | ST: 2897+57.55

TRK 1: E4-103

TRK 2: E4-203 | E4-204 | E4-205

DESIGN SPEED
TRK 1: 55 MPH | 50 MPH | 55 MPH
TRK 2: 55 MPH | 45 MPH | 55 MPH | 45 MPH | 55 MPH

STRUCT. TYPE
TIE AND BALLAST TRK | NO 8 LH CROSSOVER ON TIE AND BALLAST TRK | TIE AND BALLAST TRK | NO 8 RH CROSSOVER ON TIE AND BALLAST TRK | TIE AND BALLAST TRK | CROSSING PANEL ON TIE AND BALLAST TRK

TRK 2 PROFILE DATA

PVI STA: 2874+00.00
PVI ELEV: 841.69
AD: 0.484
100.00' VC
BVCS: 2873+50.00
BVCE: 842.13
EVCS: 2874+50.00
EVCE: 841.49

PVI STA: 2877+00.00
PVI ELEV: 840.49
AD: −0.601
100.00' VC
BVCS: 2876+50.00
BVCE: 840.69
EVCS: 2877+50.00
EVCE: 839.99

PVI STA: 2894+00.00
PVI ELEV: 823.49
AD: −0.917
120.00' VC
BVCS: 2893+40.00
BVCE: 824.09
EVCS: 2894+60.00
EVCE: 822.34

PVI STA: 2897+00.00
PVI ELEV: 817.74
AD: 1.717
100.00' VC
BVCS: 2896+50.00
BVCE: 818.70
EVCS: 2897+50.00
EVCE: 817.64

880 | 860 | 840 | 820 | 800

−0.88% | −0.40% | −1.00% | −1.92% | −0.20%

2870+00 | 2872+00 | 2874+00 | 2876+00 | 2878+00 | 2880+00 | 2882+00 | 2884+00 | 2886+00 | 2888+00 | 2890+00 | 2892+00 | 2894+00 | 2896+00

NO.	DATE	BY	CHECK	DESIGN	REVISION / SUBMITTAL

AECOM

90% SUBMISSION - 01/22/16

METROPOLITAN COUNCIL

SOUTHWEST Green Line LRT Extension

CIVIL - VOLUME 3B
TRACK
TRACK CHART
SHEET 17

DISCIPLINE: TRACK

SHEET NAME: E4-TRK-CHT-002

SHEET 39 OF 420

Jan, 18 2016 10:21 am V:\3400_ADC\CAD\00_EAST\PLANSHEETS\TRACK\E4-TRK-CHT.dwg By: V-BurrellM

RAIL TYPE | GENERAL INFORMATION | ALIGNMENT DATA | DESIGN SPEED | STRUCT. TYPE | TRK 2 PROFILE DATA

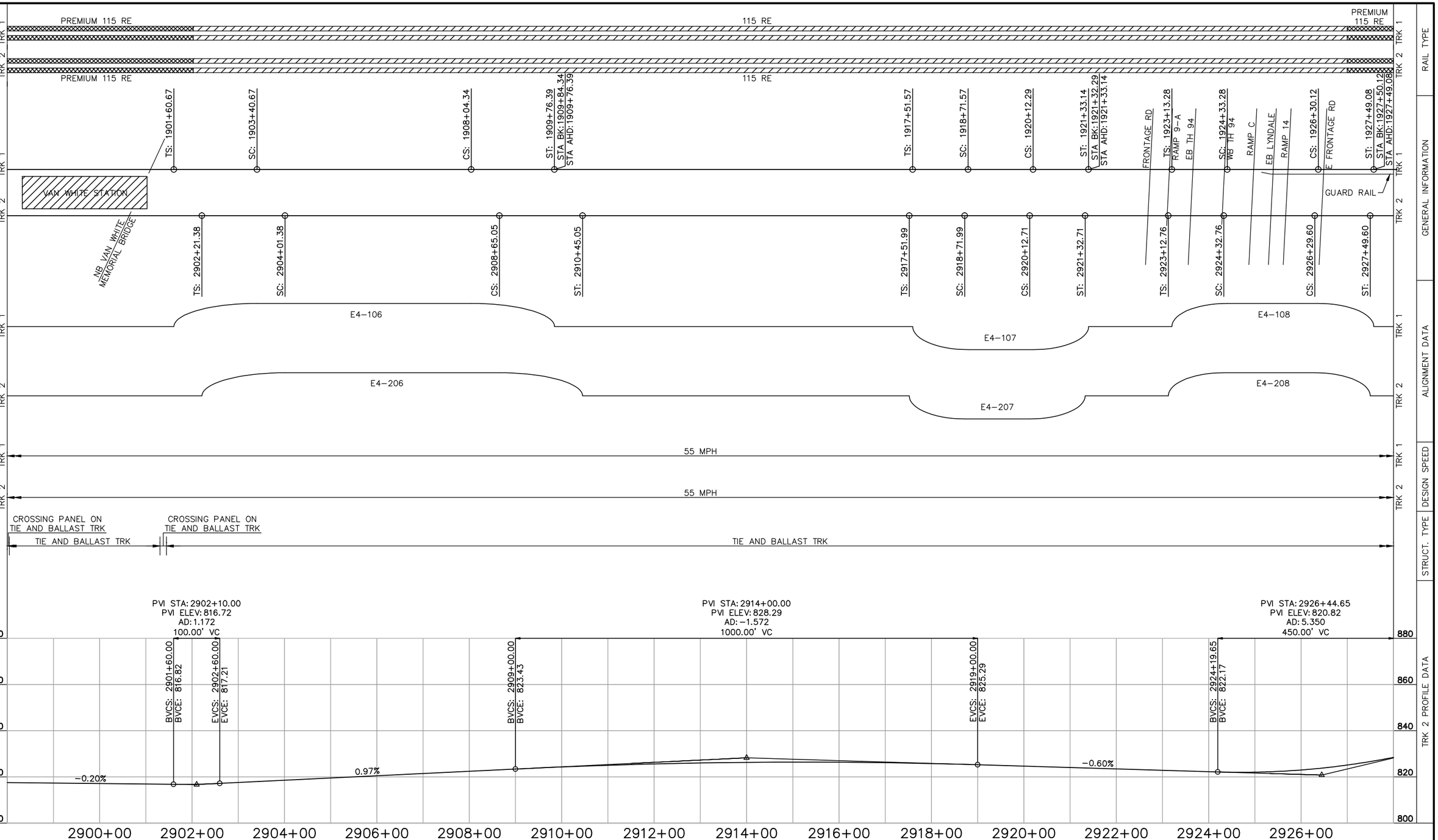

NO.	DATE	BY	CHECK	DESIGN	REVISION / SUBMITTAL

AECOM

90% SUBMISSION - 01/22/16

METROPOLITAN COUNCIL

SOUTHWEST Green Line LRT Extension

CIVIL - VOLUME 3B
TRACK
TRACK CHART
SHEET 18

DISCIPLINE: TRACK

SHEET NAME: E4-TRK-CHT-003

SHEET 40 OF 420

Jan, 18 2016 10:21 am V:\3400_ADC\CAD\00_EAST\PLANSHEETS\TRACK\E4-TRK-CHT.dwg By: V-BurrellM

RAIL TYPE | GENERAL INFORMATION | ALIGNMENT DATA | DESIGN SPEED | STRUCT. TYPE | TRK 2 PROFILE DATA

TRK 1 / TRK 2

PREMIUM 115 RE | 115 RE | PREMIUM 115 RE | 115 RE | PREMIUM 115 RE

TS: 1929+76.05 | SC: 1931+36.05 | CSAH 40 (GLENWOOD AVE) | CS: 1937+45.95 | SC: 1937+75.95 | ROYALSTON AVE N | CS: 1941+14.06 | ST: 1941+69.09 | STA BK: 1941+44.06 | STA AHD: 1941+69.09 | TS: 1942+19.56 | SC: 1942+49.56 | CS: 1943+36.52 | ST: 1943+57.61 | STA BK: 1943+66.52 | STA AHD: 1943+57.61 | ROYALSTON STATION | TS: 1948+84.13 | SC: 1949+14.13 | CS: 1950+22.38 | ST: 1950+53.67 | STA BK: 1950+52.38 | STA AHD: 1950+53.67 | 5TH AVE N | TS: 1952+01.03 | SC: 1953+21.03 | N 7TH ST | CS: 1956+43.99 | ST: 1957+39.26 | STA BK: 1957+63.99 | STA AHD: 1957+39.26

GUARD RAIL | GUARD ANGLE | GUARD RAIL | GUARD ANGLE | RESTRAINING RAIL | GUARD RAIL | RESTRAINING RAIL

TS: 2929+76.05 | SC: 2931+36.05 | CS: 2937+48.57 | SC: 2937+78.57 | BNSF WAYZATA SUB | CS: 2941+39.08 | ST: 2941+69.08 | TS: 2942+19.56 | SC: 2942+49.56 | CS: 2943+27.62 | ST: 2943+57.62 | ROYALSTON STATION | TS: 2948+84.13 | SC: 2949+14.13 | CS: 2950+23.67 | ST: 2950+53.67 | TS: 2952+01.07 | SC: 2953+21.07 | CS: 2956+17.39 | ST: 2957+37.39

E4–109A | E4–109B | E4–110 | E4–111 | E4–112

E4–209A | E4–209B | E4–210 | E4–211 | E4–212

55 MPH | 50 MPH | 10 MPH | 55 MPH | 10 MPH | 55 MPH | 45 MPH | 25 MPH | 55 MPH | 20 MPH | 55 MPH | 35 MPH | 55 MPH

TIE AND BALLAST TRK | EMBEDDED TRK ON STRUCTURE | DIRECT FIXATION TRK WITH ZERO RESTRAINT RAIL FASTENING SYSTEM ON STRUCTURE | EMBEDDED TRK | DIRECT FIXATION TRK ON STRUCTURE

PVI STA: 2926+44.65
PVI ELEV: 820.82
AD: 5.350
450.00' VC
EVCS: 2928+69.65
EVCE: 831.51

PVI STA: 2932+50.00
PVI ELEV: 849.58
AD: −4.200
420.00' VC
BVCS: 2930+40.00
BVCE: 839.60
EVCS: 2934+60.00
EVCE: 850.73

PVI STA: 2939+24.59
PVI ELEV: 853.29
AD: −3.050
200.00' VC
BVCS: 2938+24.59
BVCE: 852.74
EVCS: 2940+24.59
EVCE: 850.79

PVI STA: 2942+71.19
PVI ELEV: 844.62
AD: 1.799
100.00' VC
BVCS: 2942+21.19
BVCE: 845.87
EVCS: 2943+21.19
EVCE: 844.27

PVI STA: 2948+63.76
PVI ELEV: 840.47
AD: 5.201
250.00' VC
BVCS: 2947+38.76
BVCE: 841.35
EVCS: 2949+88.76
EVCE: 846.09

PVI STA: 2955+20.00
PVI ELEV: 870.00
AD: −9.000
500.00' VC
BVCS: 2952+70.00
BVCE: 858.75
EVCS: 2957+70.00
EVCE: 858.75

4.75% | 0.55% | −2.50% | −0.70% | 4.50% | −4.50%

900 | 880 | 860 | 840 | 820

2930+00 | 2932+00 | 2934+00 | 2936+00 | 2938+00 | 2940+00 | 2942+00 | 2944+00 | 2946+00 | 2948+00 | 2950+00 | 2952+00 | 2954+00 | 2956+00

NO.	DATE	BY	CHECK	DESIGN	REVISION / SUBMITTAL

AECOM

90% SUBMISSION - 01/22/16

METROPOLITAN COUNCIL

SOUTHWEST Green Line LRT Extension

CIVIL - VOLUME 3B
TRACK
TRACK CHART
SHEET 19

DISCIPLINE: TRACK

SHEET NAME: E4-TRK-CHT-004

SHEET 41 OF 420

Jan. 18 2016 10:22 am V:\3400_ADC\CAD\00_EAST\PLANSHEETS\TRACK\E4-TRK-CHT.dwg By: V-BurrellM

RAIL TYPE

GENERAL INFORMATION

ALIGNMENT DATA

DESIGN SPEED

STRUCT. TYPE

TRK 2 PROFILE DATA

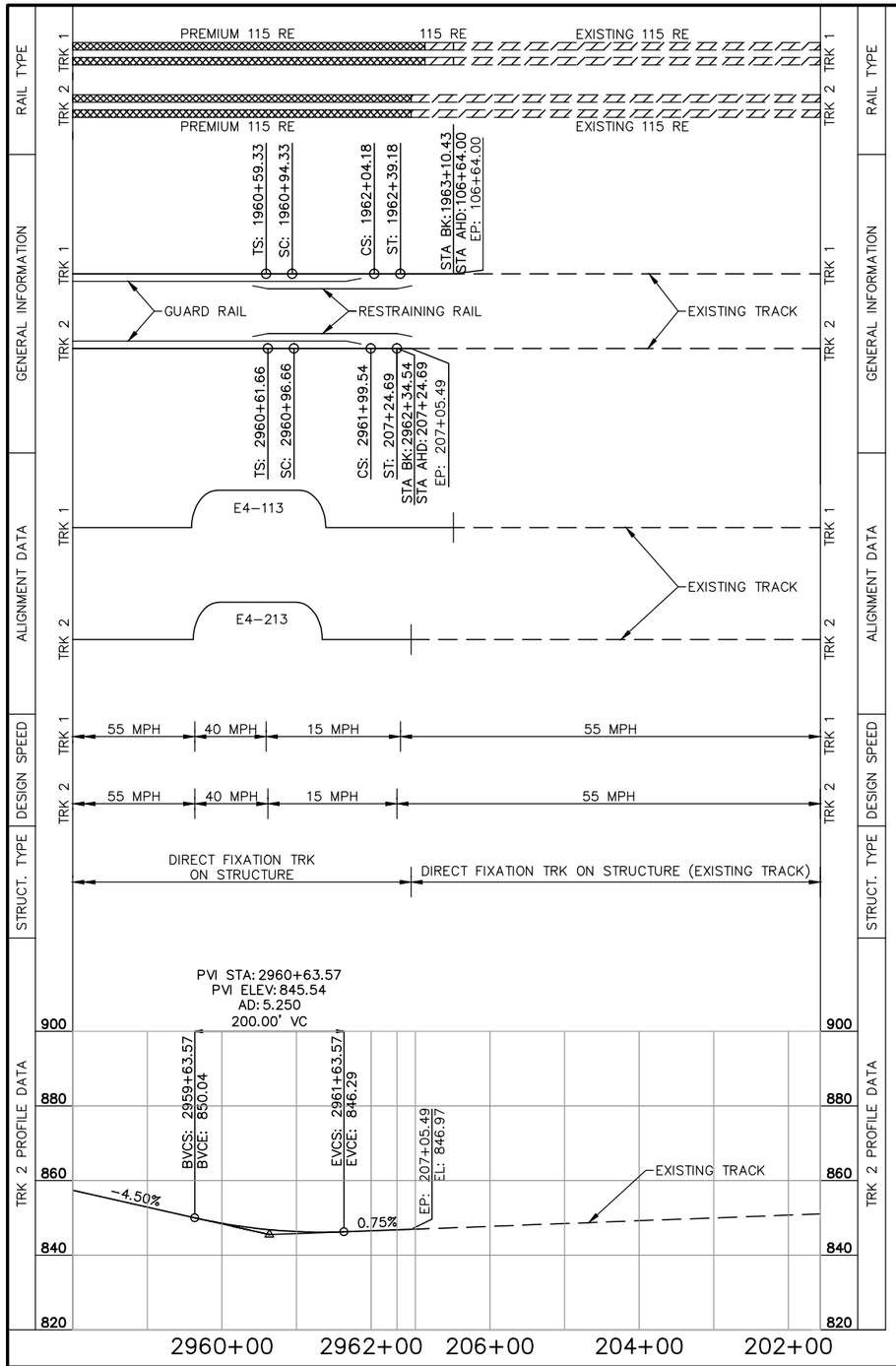

NO.	DATE	BY	CHECK	DESIGN	REVISION / SUBMITTAL

AECOM

90% SUBMISSION - 01/22/16

METROPOLITAN COUNCIL

SOUTHWEST Green Line LRT Extension

CIVIL - VOLUME 3B
TRACK
TRACK CHART
SHEET 20

DISCIPLINE: TRACK

SHEET NAME: E4-TRK-CHT-005

SHEET 42 OF 420

Jan, 18 2016 10:22 am V:\3400_ADC\CAD\00_EAST\PLANSHEETS\TRACK\E4-TRK-CHT.dwg By: V-BurrellM

STRUCT. TYPE	DESIGN SPEED	ALIGNMENT DATA		GENERAL INFORMATION		RAIL TYPE	
		TRK 2	TRK 1	TRK 2	TRK 1	TRK 2	TRK 1

NOTE:
SEE SHEET E4-TRK-CHT-004 FOR RAIL TYPE, GENERAL INFORMATION, ALIGNMENT DATA, DESIGN SPEED AND STRUCTURE TYPE

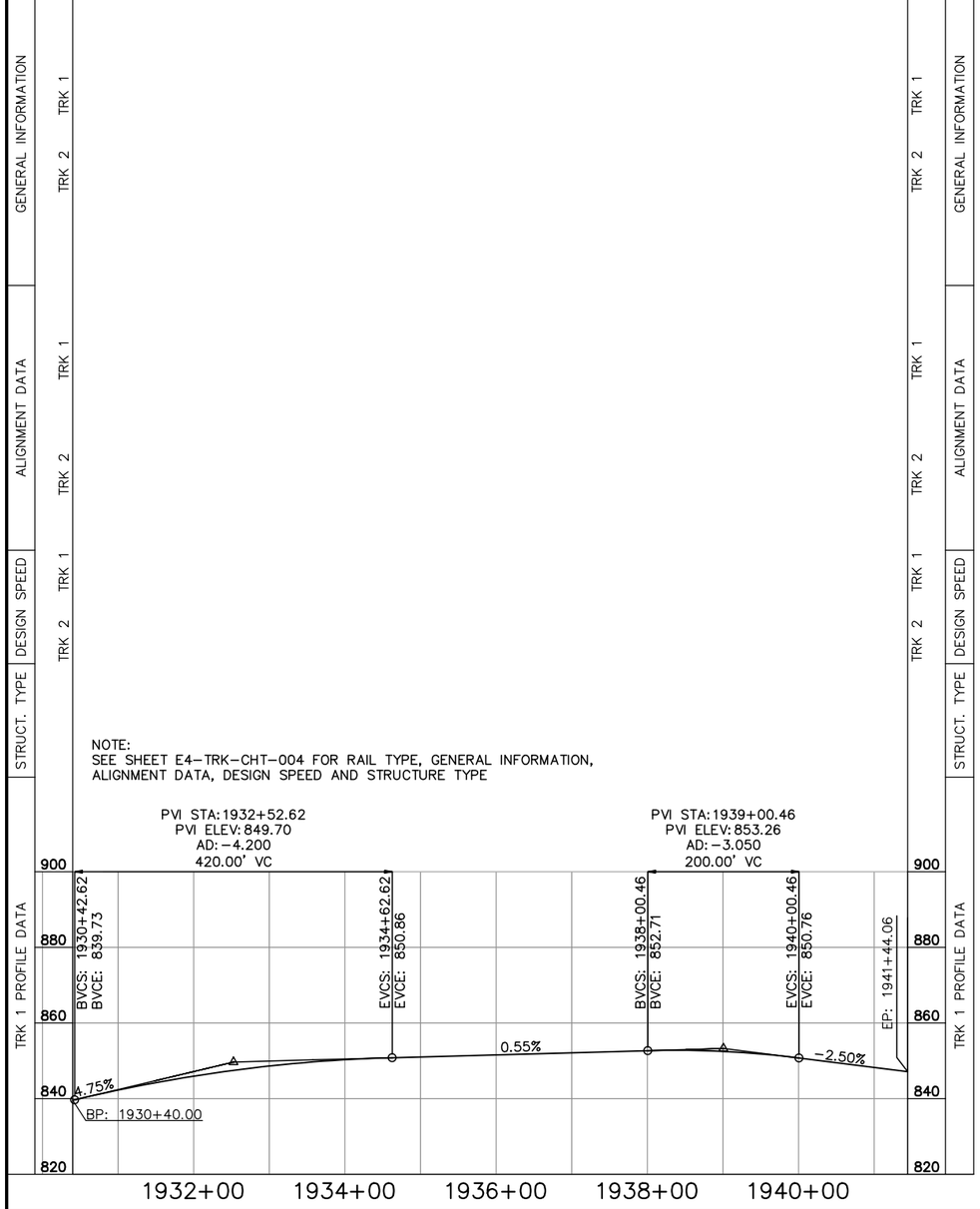

STRUCT. TYPE	DESIGN SPEED	ALIGNMENT DATA		GENERAL INFORMATION		RAIL TYPE	
		TRK 2	TRK 1	TRK 2	TRK 1	TRK 2	TRK 1

NO.	DATE	BY	CHECK	DESIGN	REVISION / SUBMITTAL

AECOM

90% SUBMISSION - 01/22/16

METROPOLITAN COUNCIL

SOUTHWEST Green Line LRT Extension

CIVIL - VOLUME 3B
TRACK
TRACK CHART
SHEET 21

DISCIPLINE: TRACK

SHEET NAME: E4-TRK-CHT-006

SHEET 43 OF 420

Jan, 18 2016 10:22 am V:\3400_ADC\CAD\00_EAST\PLANSHEETS\TRACK\E4-TRK-CHT.dwg By: V-BurrellM

NOTES:
1. FOR DITCH INVERT AND DETAILS, SEE DRAINAGE PLANS.
2. SEE SYSTEMS PLANS FOR DUCTBANK AND CABLE TROUGH DETAILS.
3. SEE URBAN DESIGN PLANS FOR FENCE LOCATION AND DETAILS.

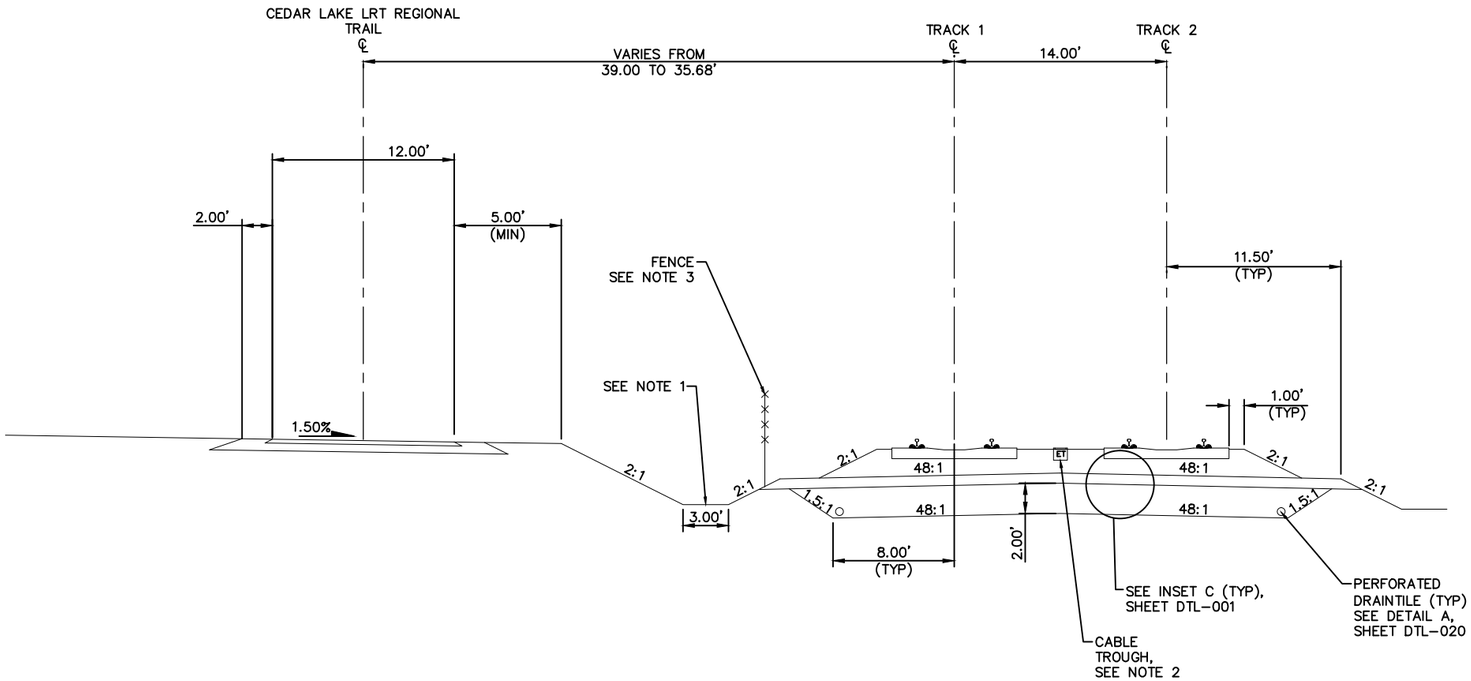

TYPICAL SECTION
STA 2496+00.00 TO STA 2497+50.00

SCALE 0 2.5 5 10 IN FEET

NO.	DATE	BY	CHECK	DESIGN	REVISION / SUBMITTAL

AECOM

90% SUBMISSION - 01/22/16

METROPOLITAN COUNCIL

SOUTHWEST Green Line LRT Extension

CIVIL - VOLUME 3B
TRACK
TYPICAL SECTIONS

SHEET 44 OF 420

DISCIPLINE: TRACK

SHEET NAME: E1-TRK-TYP-001

Jan. 15 2016 10:18 am V:\3400_ADC\CAD\00_EAST\PLANSHEETS\TRACK\E1-TRK-TYP.dwg By: V-RasulL

NOTES:
1. TRACK CENTERS WIDEN FROM 14.00' TO 20.00' BETWEEN STA 2501+94.00 AND STA 2505+10.57.
2. SECTION DOES NOT ILLUSTRATE GRADE CROSSING AT 11TH AVE S. SEE TRACK PLANS AND DETAILS.
3. SELECT GRANULAR DEPTH: STA 2497+50.00 TO STA 2502+00.00 : 2.00'; STA 2502+20.00 TO STA 2505+10.57 : 1.00'. TRANSITION LINEARLY BETWEEN STA 2502+00.00 AND STA 2502+20.00.
4. TRANSITION FROM 8.00' TO 7.00' BETWEEN STA 2502+00.00 AND 2502+20.00.
5. SEE URBAN DESIGN PLANS FOR FENCE LOCATION AND DETAILS.
6. FOR DITCH INVERT AND DETAILS, SEE DRAINAGE PLANS.
7. SEE SYSTEMS PLANS FOR DUCTBANK AND CABLE TROUGH DETAILS.

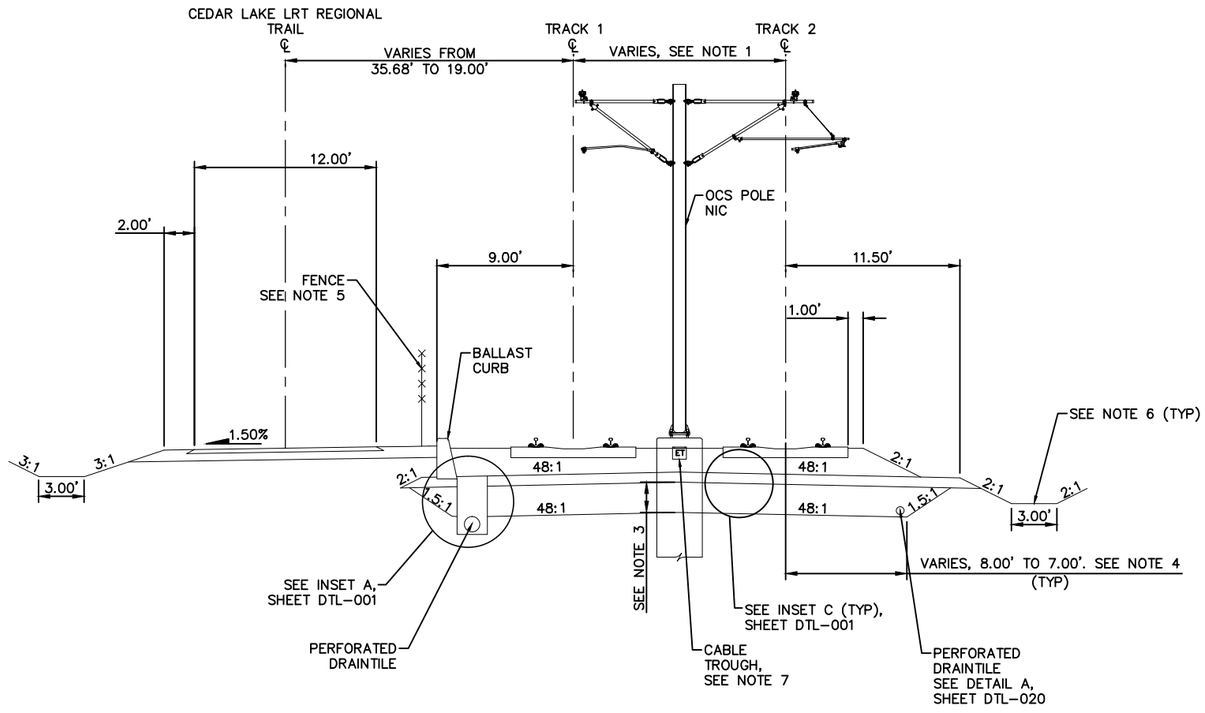

TYPICAL SECTION
STA 2497+50.00 TO STA 2505+10.57

SCALE 0 2.5 5 10 IN FEET

NO.	DATE	BY	CHECK	DESIGN	REVISION / SUBMITTAL

AECOM

90% SUBMISSION - 01/22/16

METROPOLITAN COUNCIL

SOUTHWEST Green Line LRT Extension

CIVIL - VOLUME 3B
TRACK
TYPICAL SECTIONS

SHEET 45 OF 420

DISCIPLINE: TRACK

SHEET NAME: E1-TRK-TYP-002

Jan, 15 2016 10:19 am V:\3400_ADC\CAD\00_EAST\PLANSHEETS\TRACK\E1-TRK-TYP.dwg By: V-RasulL

NOTES:
1. TRACK CENTERS WIDEN FROM 20.00' TO 30.02' BETWEEN 2505+10.57 AND STA 2508+50.21.
2. FOR DITCH INVERT AND DETAILS, SEE DRAINAGE PLANS.
3. SEE SYSTEMS PLANS FOR DUCTBANK AND CABLE TROUGH DETAILS.
4. SEE URBAN DESIGN PLANS FOR FENCE LOCATION AND DETAILS.

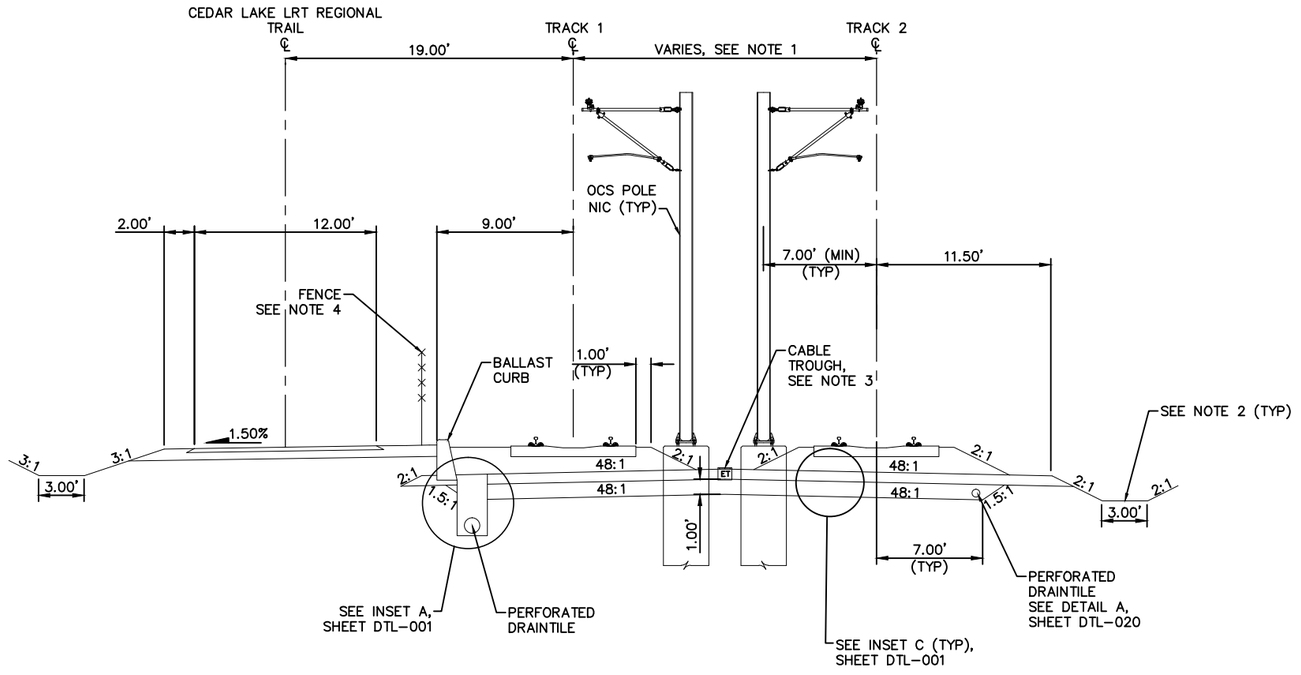

TYPICAL SECTION
STA 2505+10.57 TO STA 2508+50.21

SCALE 0 2.5 5 10 IN FEET

NO.	DATE	BY	CHECK	DESIGN	REVISION / SUBMITTAL

AECOM

90% SUBMISSION - 01/22/16

METROPOLITAN COUNCIL

SOUTHWEST Green Line LRT Extension

CIVIL - VOLUME 3B
TRACK
TYPICAL SECTIONS

DISCIPLINE: TRACK

SHEET NAME: E1-TRK-TYP-003

SHEET 46 OF 420

Jan, 15 2016 10:19 am V:\3400_ADC\CAD\00_EAST\PLANSHEETS\TRACK\E1-TRK-TYP.dwg By: V-RasulL

NOTES:
1. TRACK CENTERS WIDEN FROM 30.02' TO 30.38' BETWEEN STA 2508+50.21 AND STA 2509+53.19.
2. SEE URBAN DESIGN PLANS FOR FENCE LOCATION AND DETAILS.
3. SECTION DOES NOT ILLUSTRATE GRADE CROSSING AT 8TH AVE S. SEE TRACK PLANS AND DETAILS.
4. SEE SYSTEMS PLANS FOR DUCTBANK AND CABLE TROUGH DETAILS.
5. FOR DITCH INVERT AND DETAILS, SEE DRAINAGE PLANS.
6. SELECT GRANULAR DEPTH: STA 2508+50.00 TO STA 2510+52.00 : 1.00'; STA 2510+77.19 : 2.50'. TRANSITION LINEARLY BETWEEN STA 2510+52.00 AND STA 2510+77.19.
7. TRANSITION FROM 7.00' TO 8.50' BETWEEN STA 2510+52.00 AND STA 2510+77.19.

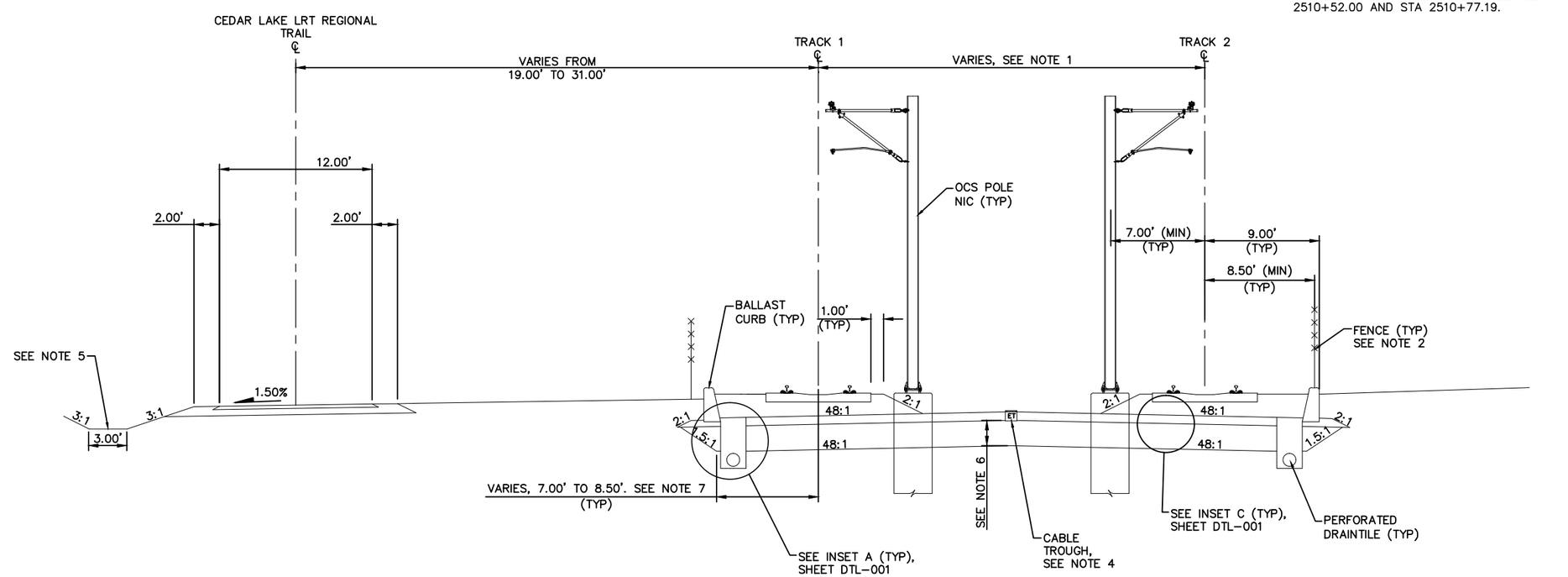

TYPICAL SECTION
STA 2508+50.21 TO STA 2510+77.19

0 2.5 5 10
SCALE IN FEET

NO.	DATE	BY	CHECK	DESIGN	REVISION / SUBMITTAL

AECOM

90% SUBMISSION - 01/22/16

METROPOLITAN COUNCIL

SOUTHWEST Green Line LRT Extension

CIVIL - VOLUME 3B
TRACK
TYPICAL SECTIONS

SHEET 47 OF 420

DISCIPLINE: TRACK

SHEET NAME: E1-TRK-TYP-004

Jan, 15 2016 10:19 am V:\3400_ADC\CAD\00_EAST\PLANSHEETS\TRACK\E1-TRK-TYP.dwg By: V-RasulL

NOTES:
1. SEE STATION PLANS FOR STATION PLATFORM DETAILS.
2. FOR DITCH INVERT AND DETAILS, SEE DRAINAGE PLANS.
3. SEE SYSTEMS PLANS FOR DUCTBANK AND CABLE TROUGH DETAILS.
4. SEE URBAN DESIGN PLANS FOR FENCE LOCATION AND DETAILS.

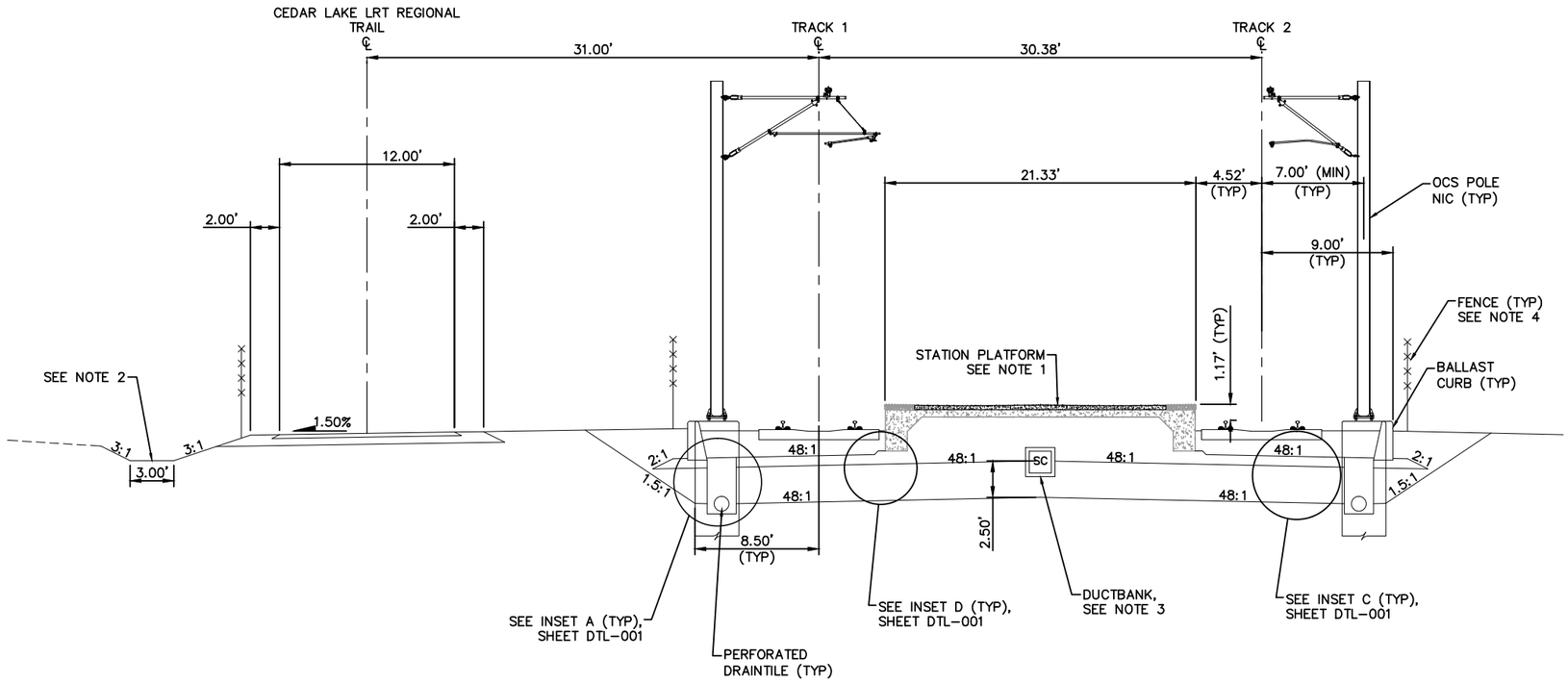

TYPICAL SECTION– DOWNTOWN HOPKINS STATION
STA 2510+77.19 TO STA 2513+47.19

SCALE 0 2.5 5 10 IN FEET

NO.	DATE	BY	CHECK	DESIGN	REVISION / SUBMITTAL

AECOM

90% SUBMISSION - 01/22/16

METROPOLITAN COUNCIL

SOUTHWEST Green Line LRT Extension

CIVIL - VOLUME 3B
TRACK
TYPICAL SECTIONS

SHEET 48 OF 420

DISCIPLINE: TRACK

SHEET NAME: E1-TRK-TYP-005

Jan, 15 2016 10:19 am V:\3400_ADC\CAD\00_EAST\PLANSHEETS\TRACK\E1-TRK-TYP.dwg By: V-RasulL

NOTES:
1. TRACK CENTERS NARROW FROM 30.38' TO 20.00' BETWEEN STA 2514+22.19 AND STA 2517+24.46.
2. SEE URBAN DESIGN PLANS FOR FENCE LOCATION AND DETAILS.
3. SEE SYSTEMS PLANS FOR DUCTBANK AND CABLE TROUGH DETAILS.
4. FOR DITCH INVERT AND DETAILS, SEE DRAINAGE PLANS.
5. SELECT GRANULAR DEPTH: STA 2513+47.19 : 2.50'; STA 2513+58.00 TO STA 2517+24.46 : 2.00'. TRANSITION LINEARLY BETWEEN STA 2513+47.19 AND STA 2513+58.00.
6. TRANSITION FROM 8.50' TO 8.00' BETWEEN STA 2513+47.19 AND STA 2513+58.00.

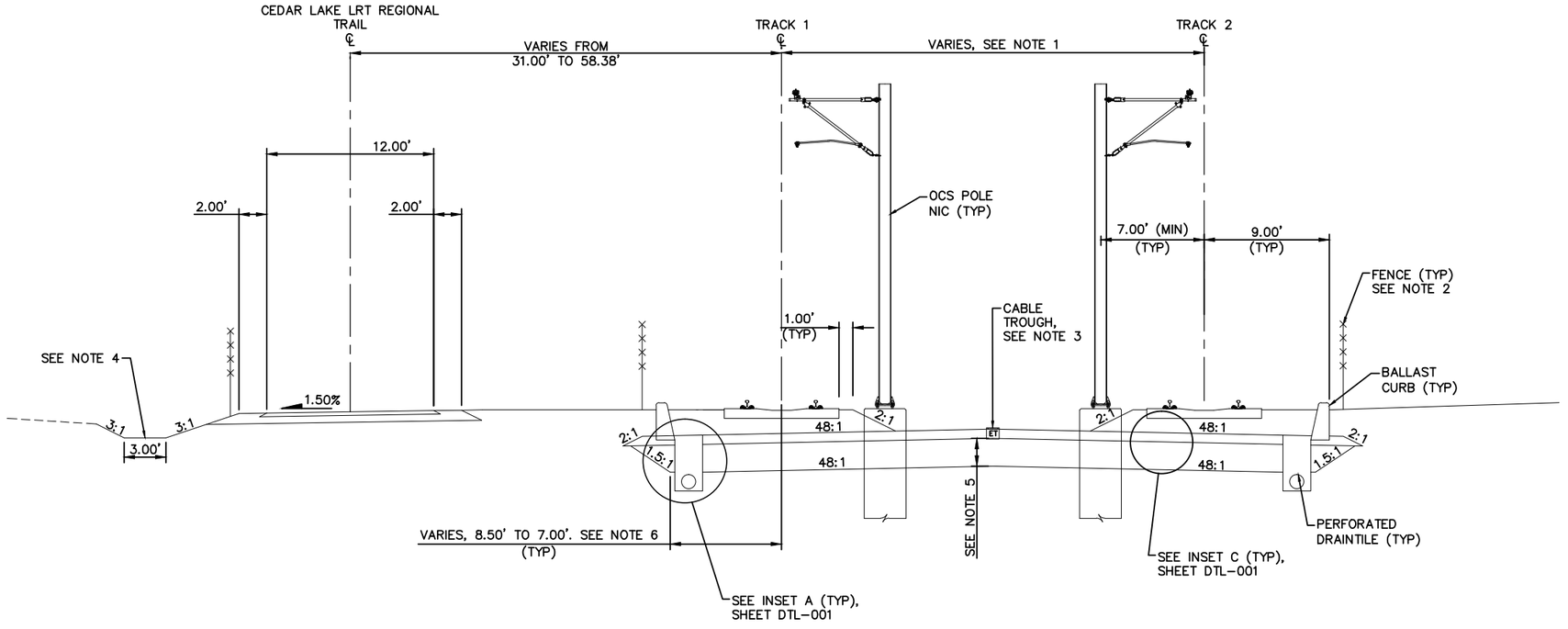

TYPICAL SECTION
STA 2513+47.19 TO STA 2517+24.46

0 2.5 5 10
SCALE IN FEET

NO.	DATE	BY	CHECK	DESIGN	REVISION / SUBMITTAL

AECOM

90% SUBMISSION - 01/22/16

METROPOLITAN COUNCIL

SOUTHWEST Green Line LRT Extension

CIVIL - VOLUME 3B
TRACK
TYPICAL SECTIONS

DISCIPLINE: TRACK

SHEET NAME: E1-TRK-TYP-006

SHEET 49 OF 420

Jan, 15 2016 10:19 am V:\3400_ADC\CAD\00_EAST\PLANSHEETS\TRACK\E1-TRK-TYP.dwg By: V-RasulL

NOTES:
1. TRACK CENTERS NARROW FROM 20.00' TO 14.00' BETWEEN STA 2517+24.46 AND STA 2519+42.12.
2. FOR DITCH INVERT AND DETAILS, SEE DRAINAGE PLANS.
3. SEE SYSTEMS PLANS FOR DUCTBANK AND CABLE TROUGH DETAILS.
4. SEE URBAN DESIGN PLANS FOR FENCE LOCATION AND DETAILS.

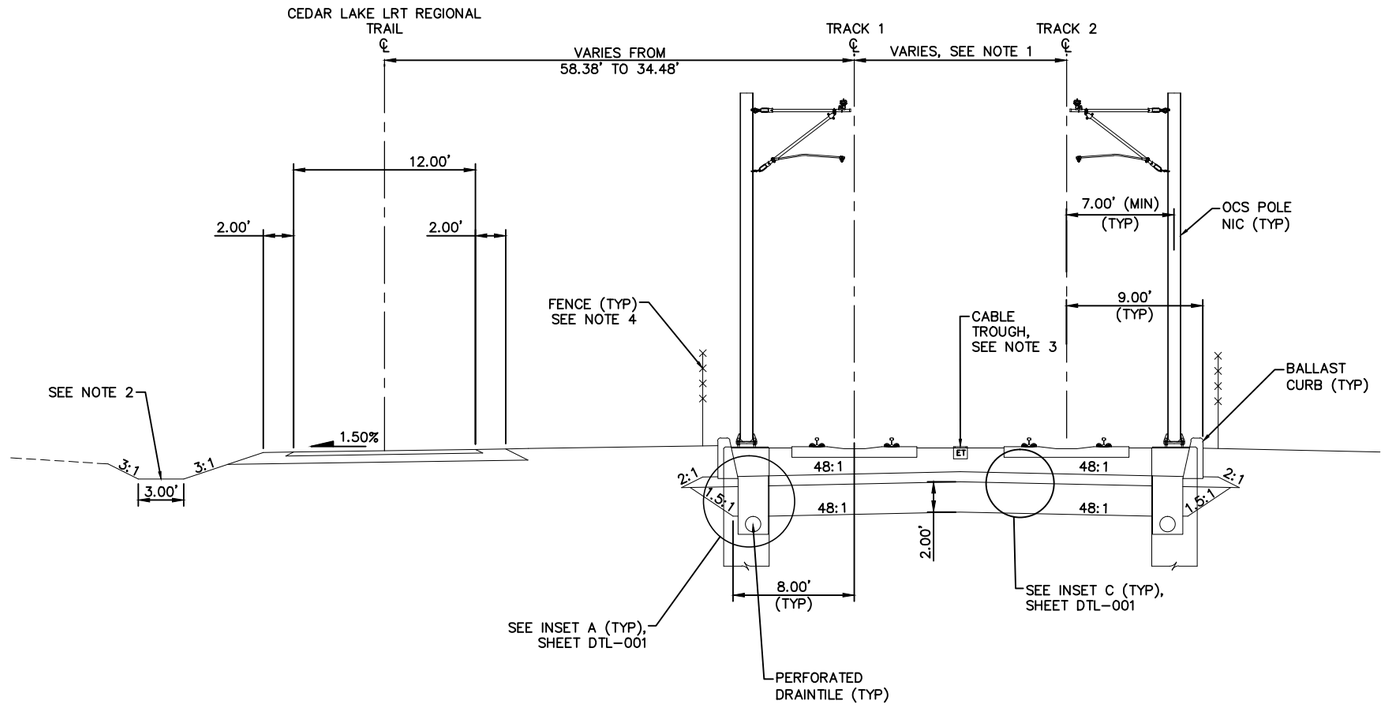

TYPICAL SECTION
STA 2517+24.46 TO STA 2519+42.12

SCALE 0 2.5 5 10 IN FEET

NO.	DATE	BY	CHECK	DESIGN	REVISION / SUBMITTAL

AECOM

90% SUBMISSION - 01/22/16

METROPOLITAN COUNCIL

SOUTHWEST Green Line LRT Extension

CIVIL - VOLUME 3B
TRACK
TYPICAL SECTIONS

DISCIPLINE: TRACK

SHEET NAME: E1-TRK-TYP-007

SHEET 50 OF 420

Jan, 15 2016 10:19 am V:\3400_ADC\CAD\00_EAST\PLANSHEETS\TRACK\E1-TRK-TYP.dwg By: V-RasulL

NOTES:
1. SECTION DOES NOT ILLUSTRATE GRADE CROSSING AT 5TH AVE S. SEE TRACK PLANS AND DETAILS.
2. SEE URBAN DESIGN PLANS FOR FENCE LOCATION AND DETAILS.
3. FOR DITCH INVERT AND DETAILS, SEE DRAINAGE PLANS.
4. SEE SYSTEMS PLANS FOR DUCTBANK AND CABLE TROUGH DETAILS.

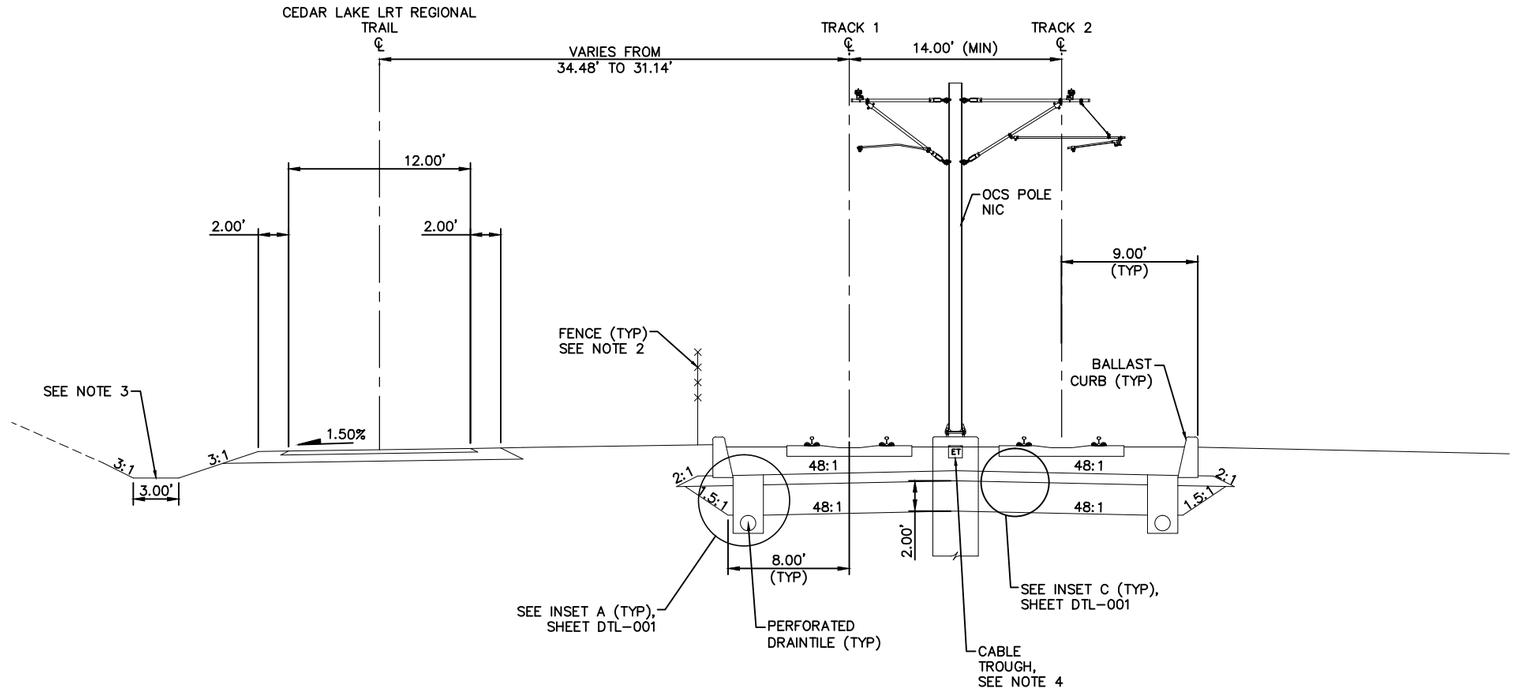

TYPICAL SECTION
STA 2519+42.12 TO STA 2522+50.00

0 2.5 5 10
SCALE IN FEET

NO.	DATE	BY	CHECK	DESIGN	REVISION / SUBMITTAL

AECOM

90% SUBMISSION - 01/22/16

METROPOLITAN COUNCIL

SOUTHWEST Green Line LRT Extension

CIVIL - VOLUME 3B
TRACK
TYPICAL SECTIONS

SHEET 51 OF 420

DISCIPLINE: TRACK

SHEET NAME: E1-TRK-TYP-008

Jan, 15 2016 10:19 am V:\3400_ADC\CAD\00_EAST\PLANSHEETS\TRACK\E1-TRK-TYP.dwg By: V-RasulL

NOTES:
1. FOR DITCH INVERT AND DETAILS, SEE DRAINAGE PLANS.
2. SEE SYSTEMS PLANS FOR DUCTBANK AND CABLE TROUGH DETAILS.
3. SEE URBAN DESIGN PLANS FOR FENCE LOCATION AND DETAILS.

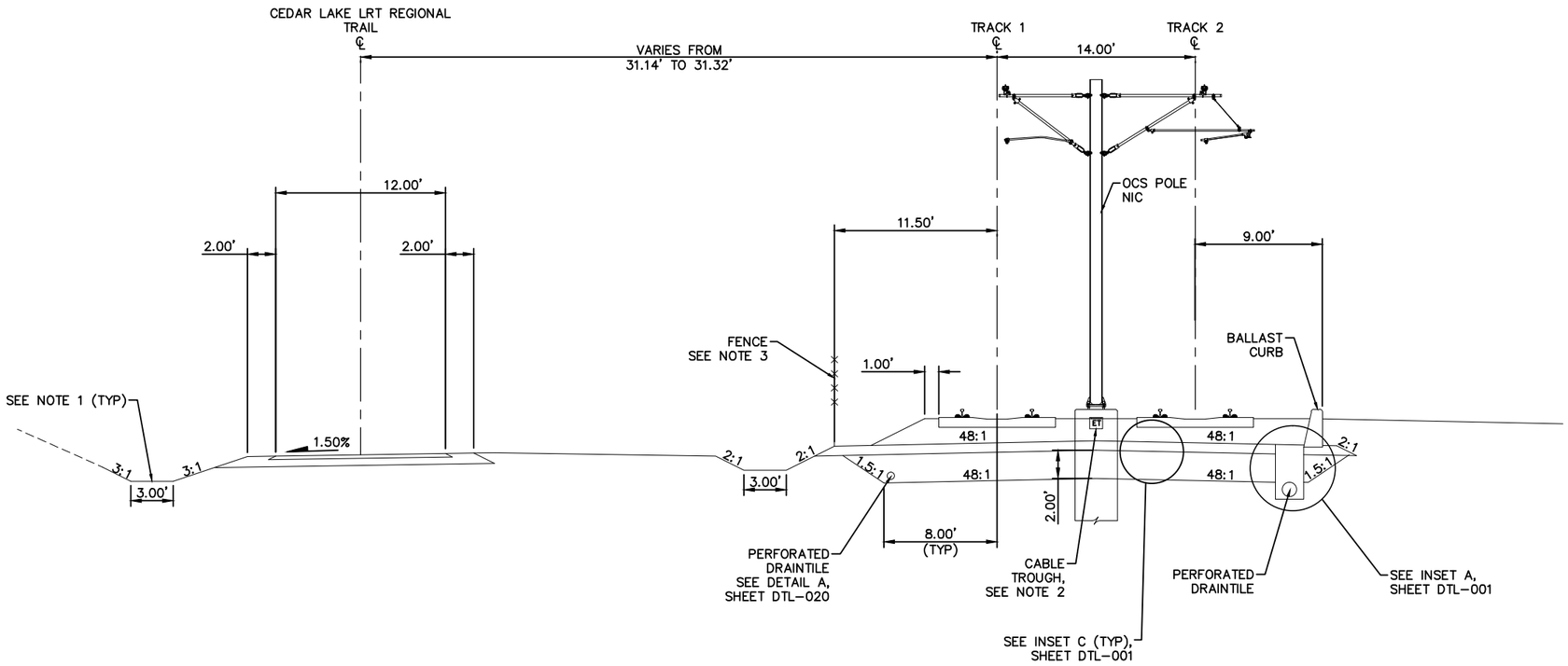

TYPICAL SECTION
STA 2522+50.00 TO STA 2524+00.00

SCALE 0 2.5 5 10 IN FEET

NO.	DATE	BY	CHECK	DESIGN	REVISION / SUBMITTAL

AECOM

90% SUBMISSION - 01/22/16

METROPOLITAN COUNCIL

SOUTHWEST Green Line LRT Extension

CIVIL - VOLUME 3B
TRACK
TYPICAL SECTIONS

DISCIPLINE: TRACK

SHEET NAME: E1-TRK-TYP-009

SHEET 52 OF 420

Jan. 15 2016 10:20 am V:\3400_ADC\CAD\00_EAST\PLANSHEETS\TRACK\E1-TRK-TYP.dwg By: V-RasulL

NOTES:
1. SELECT GRANULAR DEPTH: STA 2524+00.00: 2.00'; STA 2524+20.00 TO STA 2527+61.17: 1.00'. TRANSITION LINEARLY BETWEEN STA 2524+00.00 AND STA 2524+20.00.
2. TRANSITION FROM 8.00' TO 7.00' BETWEEN STA 2524+00.00 AND STA 2524+20.00.
3. SEE URBAN DESIGN PLANS FOR FENCE LOCATION AND DETAILS.
4. FOR DITCH INVERT AND DETAILS, SEE DRAINAGE PLANS.
5. SEE SYSTEMS PLANS FOR DUCTBANK AND CABLE TROUGH DETAILS.

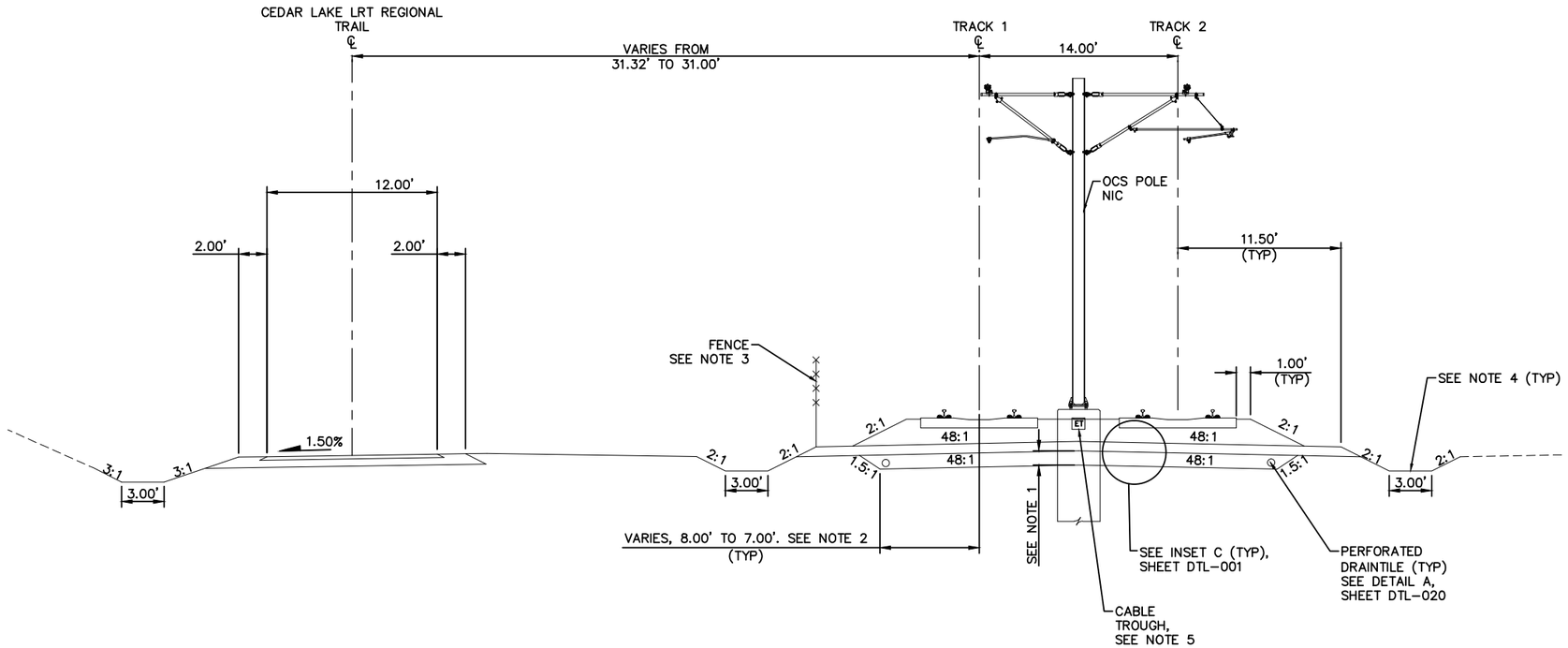

TYPICAL SECTION
STA 2524+00.00 TO STA 2527+61.17

0 2.5 5 10
SCALE IN FEET

NO.	DATE	BY	CHECK	DESIGN	REVISION / SUBMITTAL

AECOM

90% SUBMISSION - 01/22/16

METROPOLITAN COUNCIL

SOUTHWEST Green Line LRT Extension

CIVIL - VOLUME 3B
TRACK
TYPICAL SECTIONS

DISCIPLINE: TRACK

SHEET NAME: E1-TRK-TYP-010

SHEET 53 OF 420

Jan, 15 2016 10:20 am V:\3400_ADC\CAD\00_EAST\PLANSHEETS\TRACK\E1-TRK-TYP.dwg By: V-RasulL

NOTES:
1. OCS POLE CONFIGURATION AT STA 2529+69.88 IS TWO SINGLE POLES LOCATED OUTSIDE OF TRACKS.
2. FOR DITCH INVERT AND DETAILS, SEE DRAINAGE PLANS.
3. SEE URBAN DESIGN PLANS FOR FENCE LOCATION AND DETAILS.
4. SEE SYSTEMS PLANS FOR DUCTBANK AND CABLE TROUGH DETAILS.

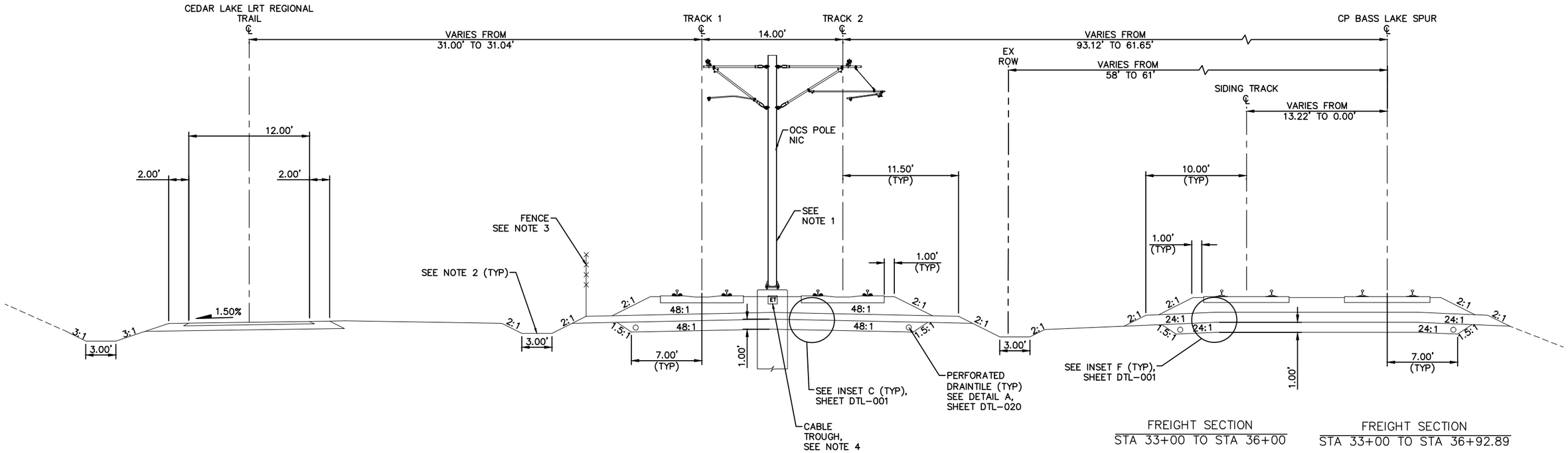

TYPICAL SECTION
STA 2527+61.17 TO STA 2531+54.28

FREIGHT SECTION
STA 33+00 TO STA 36+00

FREIGHT SECTION
STA 33+00 TO STA 36+92.89

SCALE 0 2.5 5 10 IN FEET

NO.	DATE	BY	CHECK	DESIGN	REVISION / SUBMITTAL

AECOM

90% SUBMISSION - 01/22/16

METROPOLITAN COUNCIL

SOUTHWEST Green Line LRT Extension

CIVIL - VOLUME 3B
TRACK
TYPICAL SECTIONS

SHEET 54 OF 420

DISCIPLINE: TRACK

SHEET NAME: E1-TRK-TYP-011

Jan, 15 2016 10:20 am V:\3400_ADC\CAD\00_EAST\PLANSHEETS\TRACK\E1-TRK-TYP.dwg By: V-RasulL

NOTES:
1. OCS POLE CONFIGURATION CHANGES TO OUTSIDE POLES. TRACK 1 OUTSIDE POLE IS LOCATED AT STA 2534+50.00 AND TRACK 2 OUTSIDE POLE IS LOCATED AT STA 2534+39.88.
2. SELECT GRANULAR DEPTH: STA 2531+54.28 TO STA 2532+51.63: 1.00'; STA 2533+55.17 TO STA 2535+60.25: 2.00'.
3. SEE SYSTEM PLANS FOR INTRUSION DETECTION DETAILS.
4. FOR DITCH INVERT AND DETAILS, SEE DRAINAGE PLANS.
5. SEE SYSTEMS PLANS FOR DUCTBANK AND CABLE TROUGH DETAILS.
6. SEE URBAN DESIGN PLANS FOR FENCE LOCATION AND DETAILS.

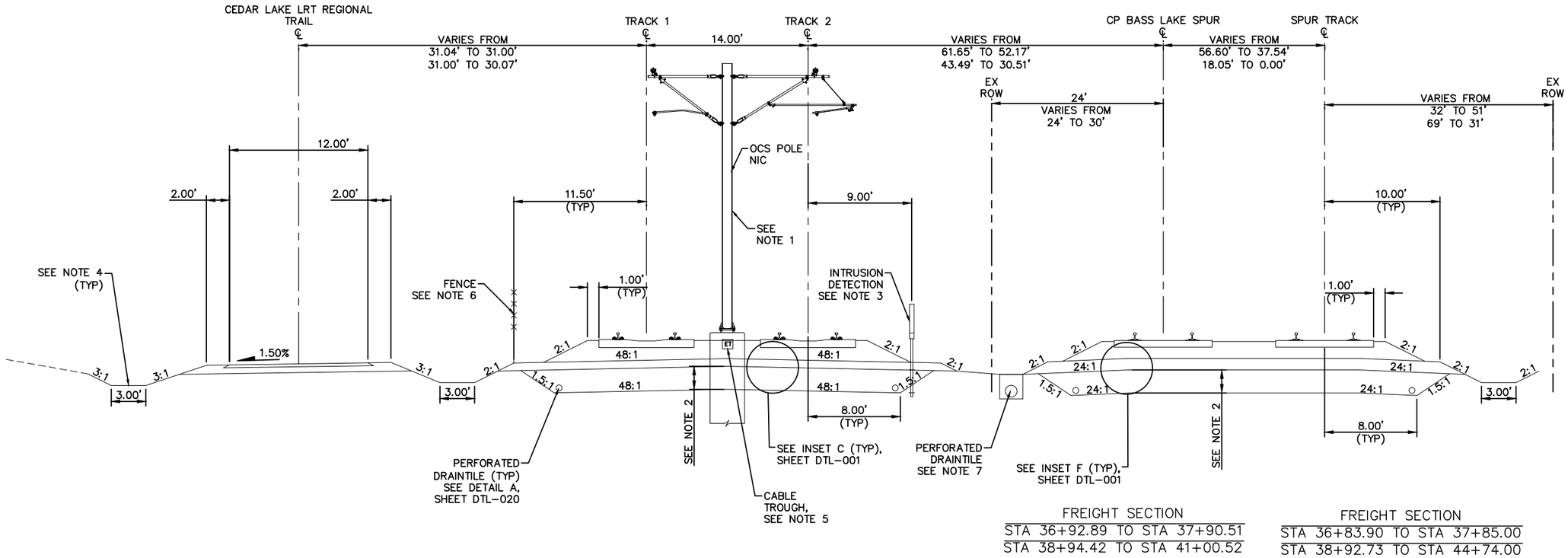

TYPICAL SECTION
STA 2531+54.28 TO STA 2532+51.63
STA 2533+55.17 TO STA 2535+60.25

FREIGHT SECTION
STA 36+92.89 TO STA 37+90.51
STA 38+94.42 TO STA 41+00.52

FREIGHT SECTION
STA 36+83.90 TO STA 37+85.00
STA 38+92.73 TO STA 44+74.00

SCALE 0 2.5 5 10 IN FEET

NO.	DATE	BY	CHECK	DESIGN	REVISION / SUBMITTAL

AECOM

90% SUBMISSION - 01/22/16

METROPOLITAN COUNCIL

SOUTHWEST Green Line LRT Extension

CIVIL - VOLUME 3B
TRACK
TYPICAL SECTIONS

DISCIPLINE: TRACK

SHEET NAME: E1-TRK-TYP-012

SHEET 55 OF 420

Jan, 15 2016 10:20 am V:\3400_ADC\CAD\00_EAST\PLANSHEETS\TRACK\E1-TRK-TYP.dwg By: V-RasulL

NOTES:
1. SELECT GRANULAR DEPTH: STA 2532+51.63 TO STA 2533+35.00: 1.00'; STA 2533+55.17: 2.00'. TRANSITION LINEARLY BETWEEN STA 2533+35.00 AND STA 2533+55.17.
2. TRANSITION FROM 7.00' TO 8.00' BETWEEN STA 2533+35.00 AND STA 2533+55.17.
3. OCS POLES ARE NOT PROPOSED WITHIN LIMITS OF TYPICAL SECTION.
4. SEE URBAN DESIGN PLANS FOR FENCE LOCATION AND DETAILS.
5. FOR DITCH INVERT AND DETAILS, SEE DRAINAGE PLANS.
6. SEE SYSTEMS PLANS FOR DUCTBANK AND CABLE TROUGH DETAILS.

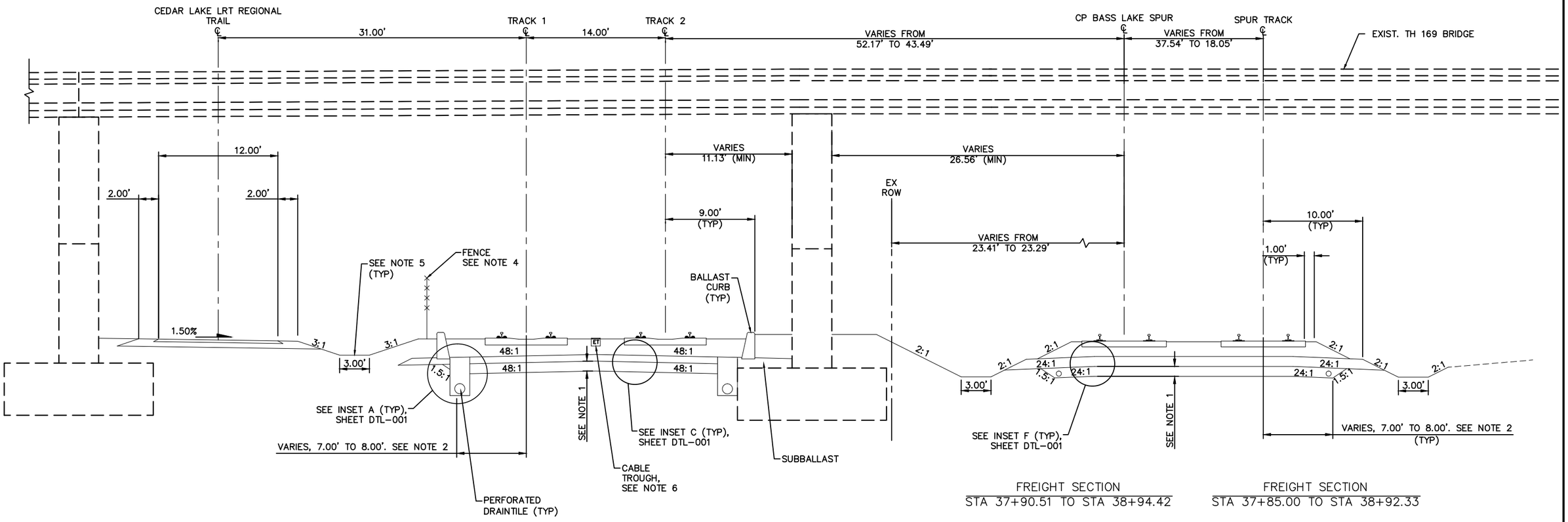

FREIGHT SECTION
STA 37+90.51 TO STA 38+94.42

FREIGHT SECTION
STA 37+85.00 TO STA 38+92.33

TYPICAL SECTION
STA 2532+51.63 TO STA 2533+55.17

0 2.5 5 10
SCALE IN FEET

NO.	DATE	BY	CHECK	DESIGN	REVISION / SUBMITTAL

AECOM

90% SUBMISSION - 01/22/16

METROPOLITAN COUNCIL

SOUTHWEST Green Line LRT Extension

CIVIL - VOLUME 3B
TRACK
TYPICAL SECTIONS

SHEET 56 OF 420

DISCIPLINE: TRACK

SHEET NAME: E1-TRK-TYP-013

Jan, 15 2016 10:20 am V:\3400_ADC\CAD\00_EAST\PLANSHEETS\TRACK\E1-TRK-TYP.dwg By: V-RasulL

NOTES:
1. TRACK CENTERS VARY IN CURVE E1–206. SEE TRACK PLANS.
2. SEE SYSTEM PLANS FOR INTRUSION DETECTION DETAILS.
3. FOR DITCH INVERT AND DETAILS, SEE DRAINAGE PLANS.
4. SEE SYSTEMS PLANS FOR DUCTBANK AND CABLE TROUGH DETAILS.
5. SEE URBAN DESIGN PLANS FOR FENCE LOCATION AND DETAILS.
6. SELECT GRANULAR DEPTH: STA 2535+60.25 TO STA 2539+38.00: 2.00'; STA 2539+65.26: 3.33'. TRANSITION LINEARLY BETWEEN STA 2539+38.00 AND STA 2539+65.26.
7. TRANSITION FROM 8.00' TO 9.50' BETWEEN STA 2539+38.00 AND STA 2539+65.26.

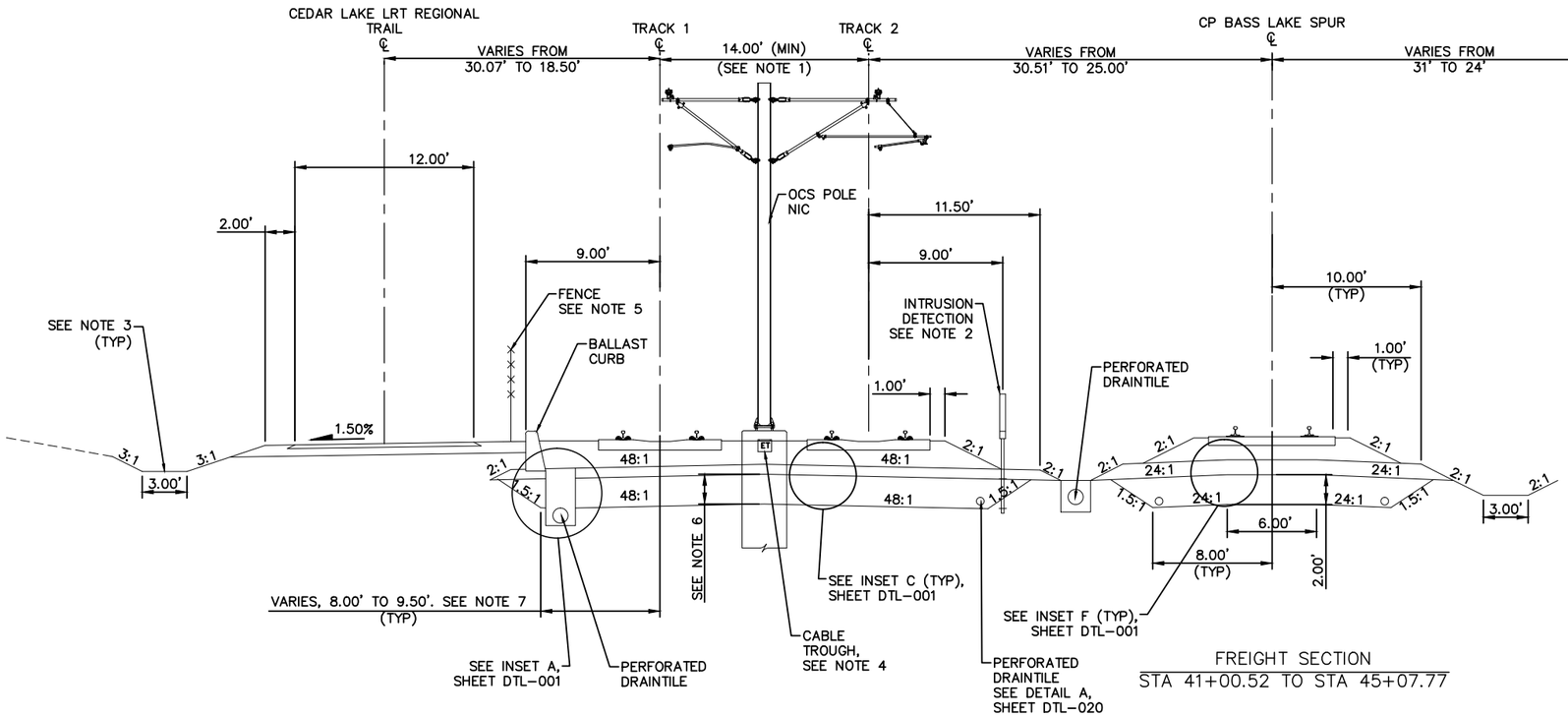

TYPICAL SECTION
STA 2535+60.25 TO STA 2539+65.26

FREIGHT SECTION
STA 41+00.52 TO STA 45+07.77

SCALE 0 2.5 5 10 IN FEET

NO.	DATE	BY	CHECK	DESIGN	REVISION / SUBMITTAL

AECOM

90% SUBMISSION - 01/22/16

METROPOLITAN COUNCIL

SOUTHWEST Green Line LRT Extension

CIVIL - VOLUME 3B
TRACK
TYPICAL SECTIONS

DISCIPLINE: TRACK

SHEET NAME: E1-TRK-TYP-014

SHEET 57 OF 420

Jan, 15 2016 10:20 am v:\3400_ADC\CAD\00_EAST\PLANSHEETS\TRACK\E1-TRK-TYP.dwg By: V-RasulL

NOTES:
1. SEE RETAINING WALL PLANS FOR DETAILS.
2. SEE SYSTEM PLANS FOR INTRUSION DETECTION DETAILS.
3. FOR GUARD RAIL LIMITS SEE TRACK CHARTS.
4. SEE SYSTEMS PLANS FOR DUCTBANK AND CABLE TROUGH DETAILS.
5. FOR DITCH INVERT AND DETAILS, SEE DRAINAGE PLANS.
6. SEE URBAN DESIGN PLANS FOR FENCE LOCATION AND DETAILS.
7. SELECT GRANULAR DEPTH: STA 2539+65.26: 2.00'; STA 2539+86.00 TO STA 2540+45.26: 1.00'. TRANSITION LINEARLY BETWEEN STA 2539+65.26 AND STA 2539+86.00.
8. TRANSITION FROM 8.00' TO 7.00' BETWEEN STA 2539+65.26 AND STA 2539+86.00.

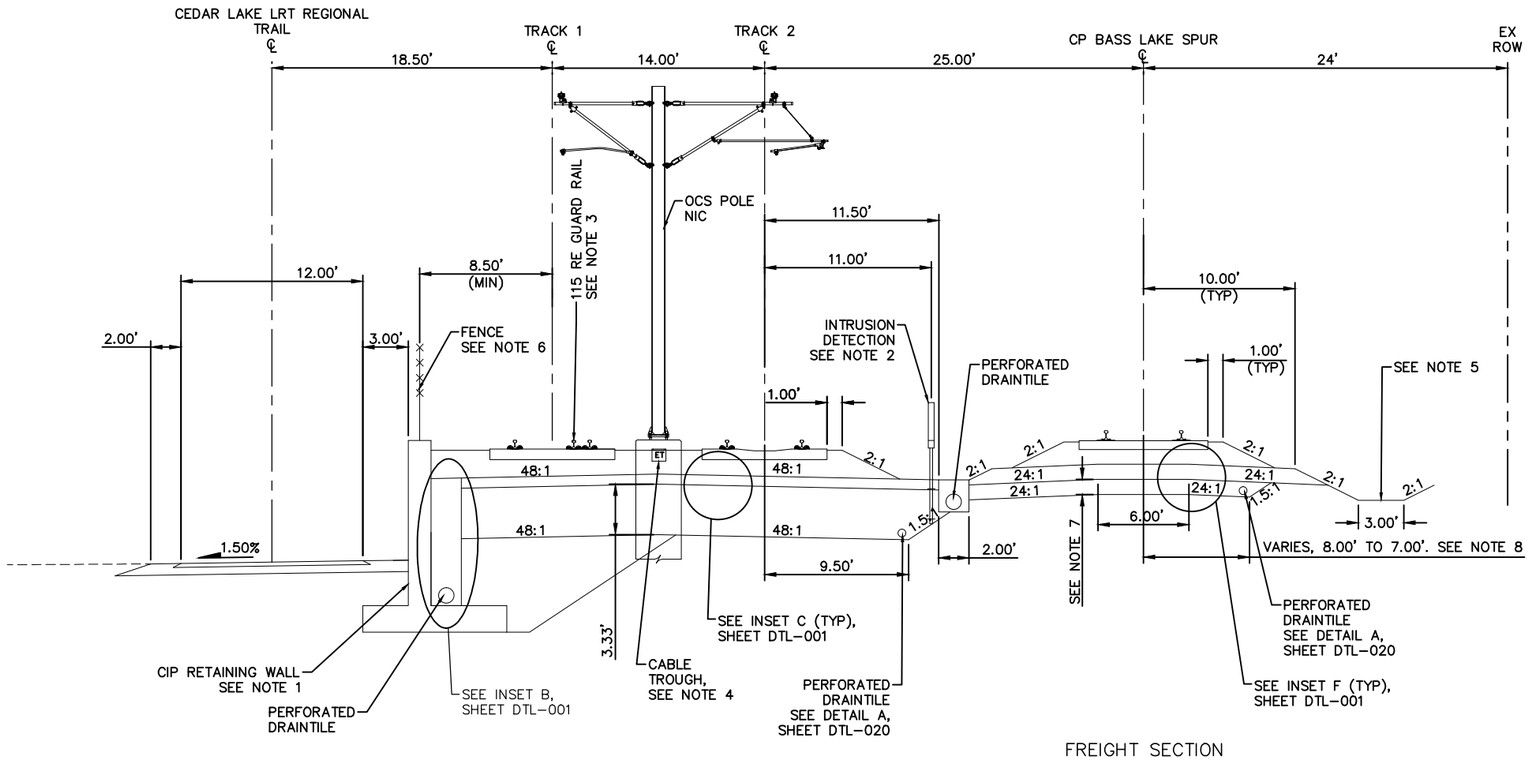

TYPICAL SECTION
STA 2539+65.26 TO STA 2540+45.26

FREIGHT SECTION
STA 45+07.77 TO STA 45+87.77

SCALE 0 2.5 5 10 IN FEET

NO.	DATE	BY	CHECK	DESIGN	REVISION / SUBMITTAL

AECOM

90% SUBMISSION - 01/22/16

METROPOLITAN COUNCIL

SOUTHWEST Green Line LRT Extension

CIVIL - VOLUME 3B
TRACK
TYPICAL SECTIONS

DISCIPLINE: TRACK

SHEET NAME: E1-TRK-TYP-015

SHEET 58 OF 420

Jan, 15 2016 10:20 am V:\3400_ADC\CAD\00_EAST\PLANSHEETS\TRACK\E1-TRK-TYP.dwg By: V-RasulL

NOTES:
1. SEE RETAINING WALL PLANS FOR DETAILS.
2. FOR DITCH INVERT AND DETAILS, SEE DRAINAGE PLANS.
3. SEE SYSTEMS PLANS FOR DUCTBANK AND CABLE TROUGH DETAILS.
4. FOR GUARD RAIL LIMITS SEE TRACK CHARTS.
5. SEE URBAN DESIGN PLANS FOR FENCE LOCATION AND DETAILS.

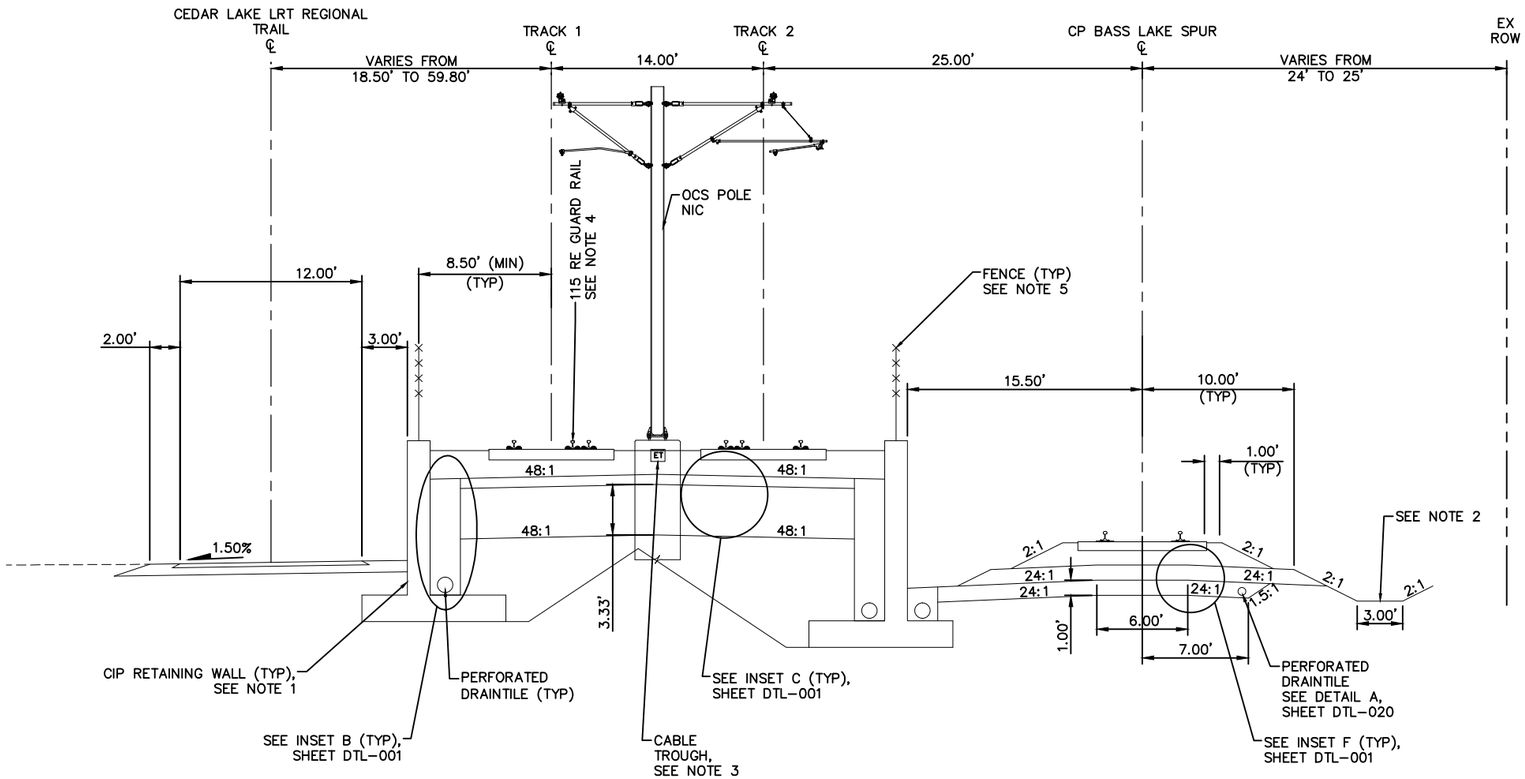

TYPICAL SECTION
STA 2540+45.26 TO STA 2541+41.46

FREIGHT SECTION
STA 45+87.77 TO STA 46+83.97

SCALE 0 2.5 5 10 IN FEET

NO.	DATE	BY	CHECK	DESIGN	REVISION / SUBMITTAL

AECOM

90% SUBMISSION - 01/22/16

METROPOLITAN COUNCIL

SOUTHWEST Green Line LRT Extension

CIVIL - VOLUME 3B
TRACK
TYPICAL SECTIONS

DISCIPLINE: TRACK

SHEET NAME: E1-TRK-TYP-016

SHEET 59 OF 420

Jan. 15 2016 10:21 am V:\3400_ADC\CAD\00_EAST\PLANSHEETS\TRACK\E1-TRK-TYP.dwg By: V-RasulL

NOTES:
1. SEE RETAINING WALL PLANS FOR DETAILS.
2. FOR DITCH INVERT AND DETAILS, SEE DRAINAGE PLANS.
3. FOR GUARD RAIL LIMITS SEE TRACK CHARTS.
4. SEE SYSTEMS PLANS FOR DUCTBANK AND CABLE TROUGH DETAILS.
5. SEE URBAN DESIGN PLANS FOR FENCE LOCATION AND DETAILS.

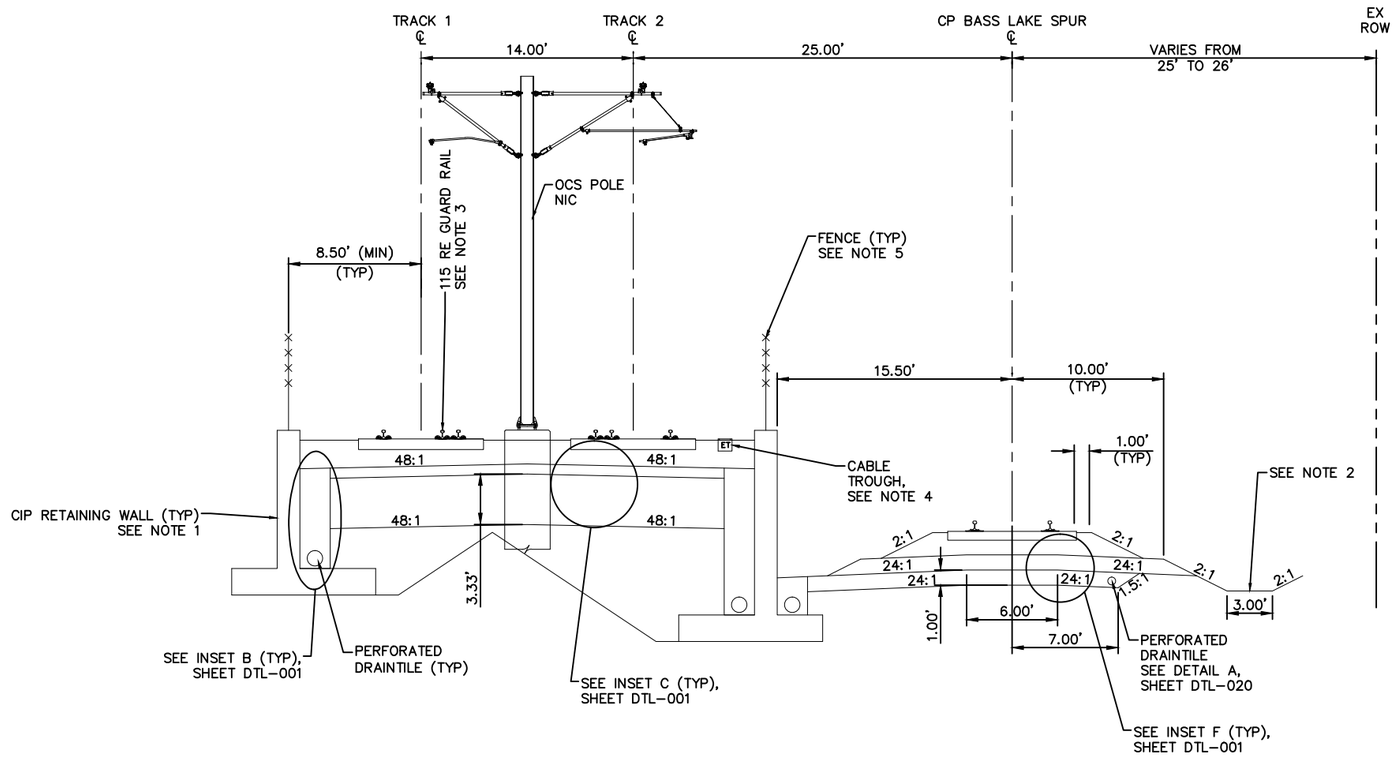

FREIGHT SECTION
STA 46+83.97 TO STA 49+67.80

TYPICAL SECTION
STA 2541+41.46 TO STA 2544+25.29

SCALE 0 2.5 5 10 IN FEET

NO.	DATE	BY	CHECK	DESIGN	REVISION / SUBMITTAL

AECOM

90% SUBMISSION - 01/22/16

METROPOLITAN COUNCIL

SOUTHWEST Green Line LRT Extension

CIVIL - VOLUME 3B
TRACK
TYPICAL SECTIONS

DISCIPLINE: TRACK

SHEET NAME: E1-TRK-TYP-017

SHEET 60 OF 420

Jan, 15 2016 10:21 am V:\3400_ADC\CAD\00_EAST\PLANSHEETS\TRACK\E1-TRK-TYP.dwg By: V-RasulL

NOTES:
1. SECTION DOES NOT ILLUSTRATE GRADE CROSSING AT EXCELSIOR BLVD. SEE TRACK PLANS AND DETAILS.
2. MnDOT BRIDGE 27C10. SEE STRUCTURE PLANS.
3. FOR DITCH INVERT AND DETAILS, SEE DRAINAGE PLANS.
4. SEE SYSTEMS PLANS FOR DUCTBANK AND CABLE TROUGH DETAILS.
5. SEE TRACK DETAILS FOR PLINTH LAYOUT.
6. SEE BRIDGE PLANS FOR FENCE LOCATION AND DETAILS.

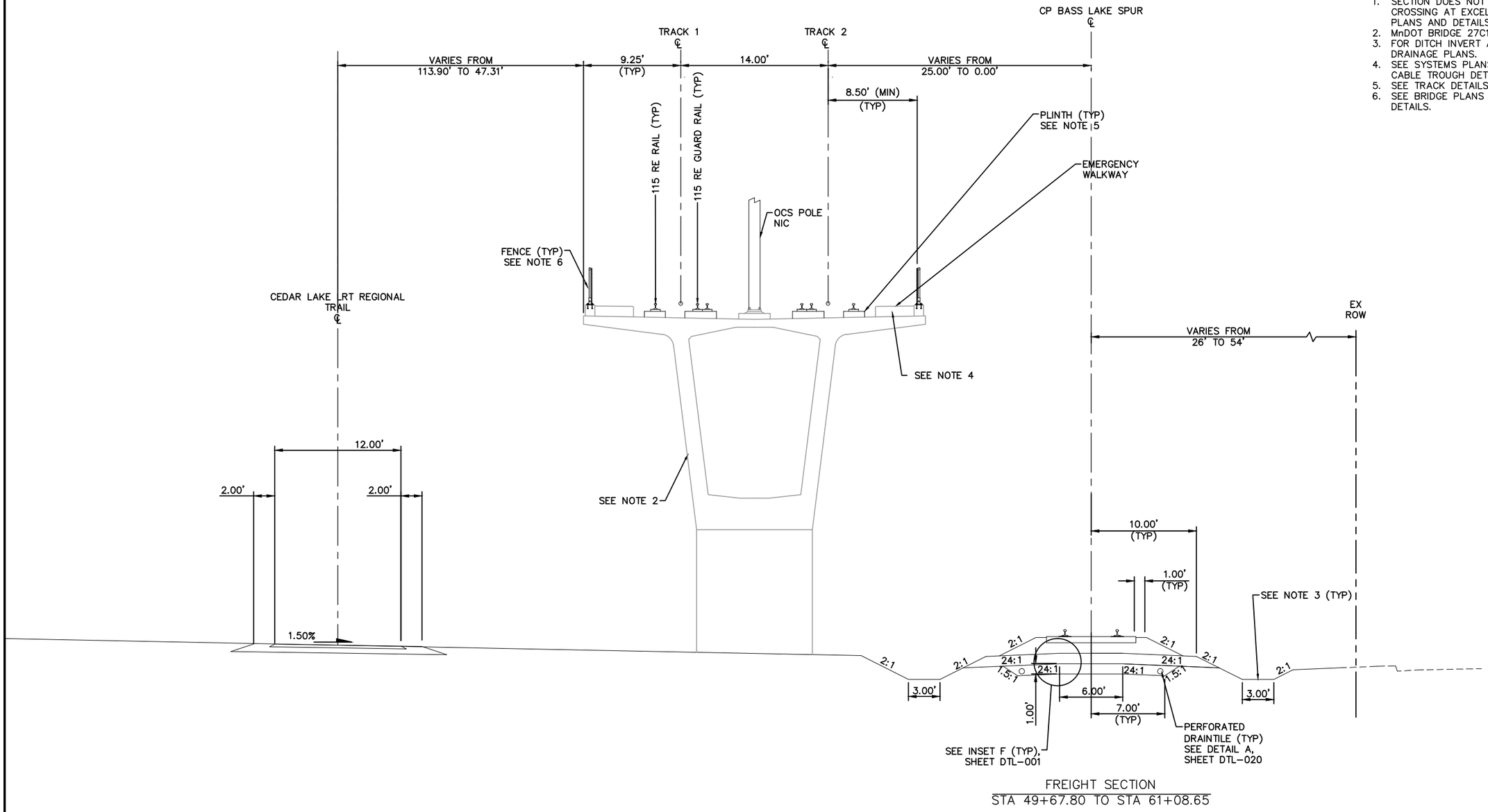

FREIGHT SECTION
STA 49+67.80 TO STA 61+08.65

TYPICAL SECTION
STA 2544+25.29 TO STA 2555+65.56

SCALE 0 2.5 5 10 IN FEET

NO.	DATE	BY	CHECK	DESIGN	REVISION / SUBMITTAL

AECOM

90% SUBMISSION - 01/22/16

METROPOLITAN COUNCIL

SOUTHWEST Green Line LRT Extension

CIVIL - VOLUME 3B
TRACK
TYPICAL SECTIONS

SHEET 61 OF 420

DISCIPLINE: TRACK

SHEET NAME: E1-TRK-TYP-018

Jan, 15 2016 10:21 am V:\3400_ADC\CAD\00_EAST\PLANSHEETS\TRACK\E1-TRK-TYP.dwg By: V-RasulL

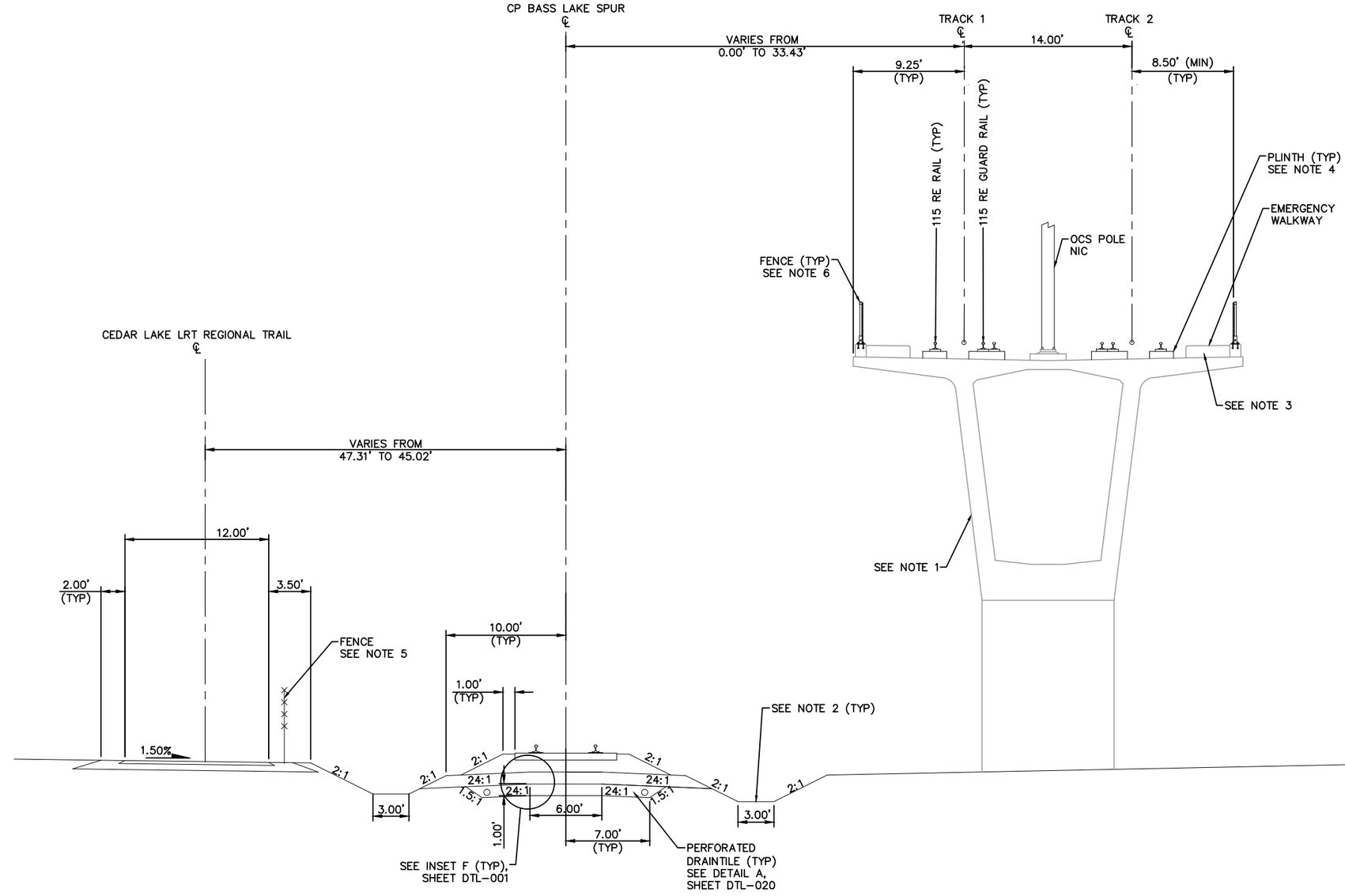

FREIGHT SECTION
STA 61+08.65 TO STA 65+89.35

TYPICAL SECTION
STA 2555+65.56 TO STA 2560+45.29

NOTES:
1. MnDOT BRIDGE 27C10. SEE STRUCTURE PLANS.
2. FOR DITCH INVERT AND DETAILS, SEE DRAINAGE PLANS.
3. SEE SYSTEMS PLANS FOR DUCTBANK AND CABLE TROUGH DETAILS.
4. SEE TRACK DETAILS FOR PLINTH LAYOUT.
5. SEE URBAN DESIGN PLANS FOR FENCE LOCATION AND DETAILS.
6. SEE BRIDGE PLANS FOR FENCE LOCATION AND DETAILS.

0 2.5 5 10
SCALE IN FEET

NO.	DATE	BY	CHECK	DESIGN	REVISION / SUBMITTAL

AECOM

90% SUBMISSION - 01/22/16

METROPOLITAN COUNCIL

SOUTHWEST Green Line LRT Extension

CIVIL - VOLUME 3B
TRACK
TYPICAL SECTIONS

SHEET 62 OF 420

DISCIPLINE: TRACK

SHEET NAME: E1-TRK-TYP-019

Jan, 15 2016 10:21 am V:\3400_ADC\CAD\00_EAST\PLANSHEETS\TRACK\E1-TRK-TYP.dwg By: V-RasulL

NOTES:
1. SEE RETAINING WALL PLANS FOR DETAILS.
2. FOR DITCH INVERT AND DETAILS, SEE DRAINAGE PLANS.
3. SEE URBAN DESIGN PLANS FOR FENCE LOCATION AND DETAILS.
4. FOR GUARD RAIL LIMITS SEE TRACK CHARTS.
5. SEE SYSTEMS PLANS FOR DUCTBANK AND CABLE TROUGH DETAILS.

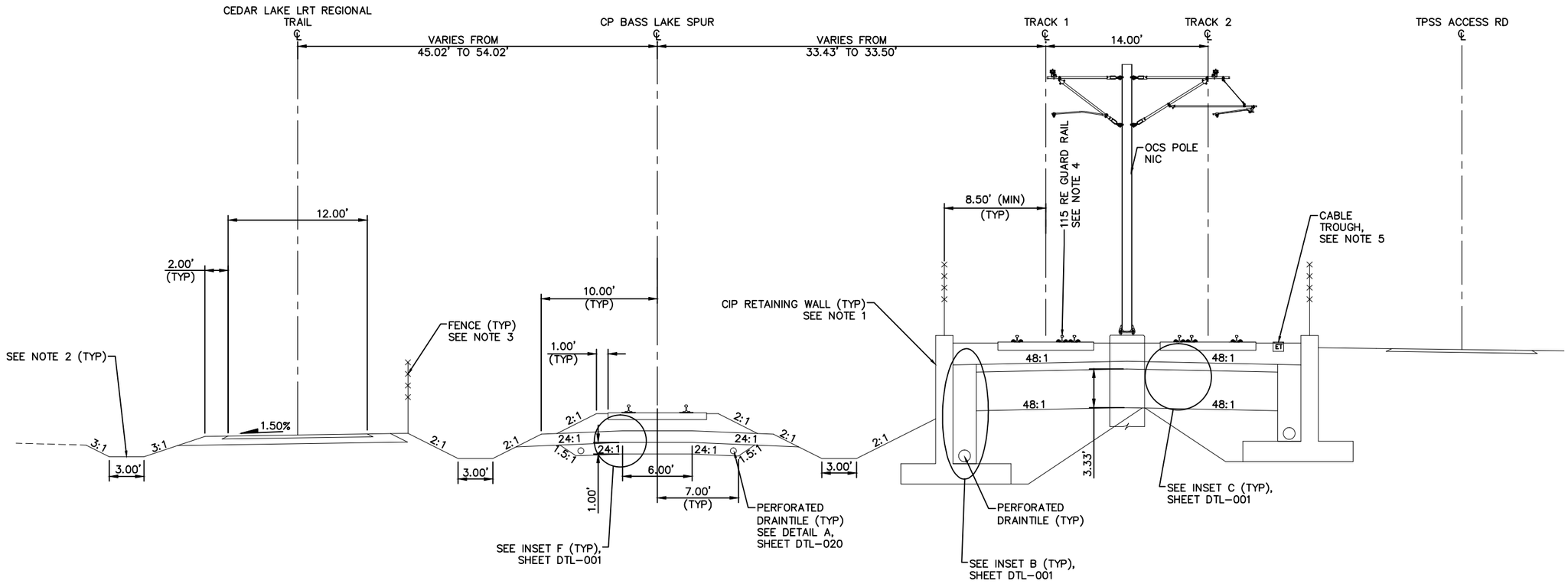

FREIGHT SECTION
STA 65+89.37 TO STA 69+31.91

TYPICAL SECTION
STA 2560+45.29 TO STA 2563+87.98

SCALE 0 2.5 5 10 IN FEET

NO.	DATE	BY	CHECK	DESIGN	REVISION / SUBMITTAL

AECOM

90% SUBMISSION - 01/22/16

METROPOLITAN COUNCIL

SOUTHWEST Green Line LRT Extension

CIVIL - VOLUME 3B
TRACK
TYPICAL SECTIONS

DISCIPLINE: TRACK

SHEET NAME: E1-TRK-TYP-020

SHEET 63 OF 420

Jan, 15 2016 10:21 am V:\3400_ADC\CAD\00_EAST\PLANSHEETS\TRACK\E1-TRK-TYP.dwg By: V-RasulL

NOTES:
1. SEE RETAINING WALL PLANS FOR DETAILS.
2. SEE URBAN DESIGN PLANS FOR FENCE LOCATION AND DETAILS.
3. FOR DITCH INVERT AND DETAILS, SEE DRAINAGE PLANS.
4. FOR GUARD RAIL LIMITS SEE TRACK CHARTS.
5. SEE SYSTEMS PLANS FOR DUCTBANK AND CABLE TROUGH DETAILS.

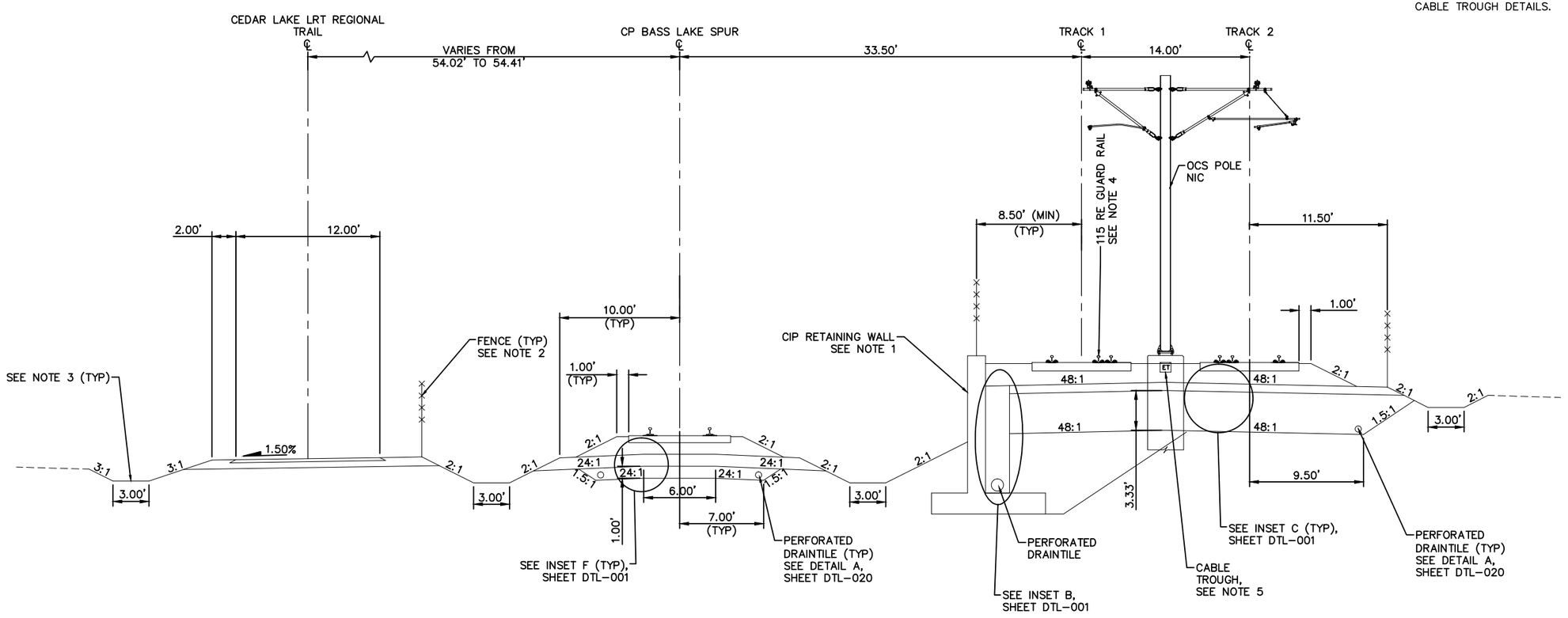

FREIGHT SECTION
STA 69+31.91 TO STA 71+65.43

TYPICAL SECTION
STA 2563+87.98 TO STA 2566+21.50

SCALE 0 2.5 5 10 IN FEET

NO.	DATE	BY	CHECK	DESIGN	REVISION / SUBMITTAL

AECOM

90% SUBMISSION - 01/22/16

METROPOLITAN COUNCIL

SOUTHWEST Green Line LRT Extension

CIVIL - VOLUME 3B
TRACK
TYPICAL SECTIONS

DISCIPLINE: TRACK

SHEET NAME: E1-TRK-TYP-021

SHEET 64 OF 420

Jan. 15 2016 10:21 am V:\3400_ADC\CAD\00_EAST\PLANSHEETS\TRACK\E1-TRK-TYP.dwg By: V-RasulL

NOTES:
1. TRACK CENTERS WIDEN FROM 14.00' TO 20.00' BETWEEN STA 2569+13.97 AND STA 2571+31.62.
2. SEE SYSTEM PLANS FOR INTRUSION DETECTION DETAILS.
3. FOR DITCH INVERT AND DETAILS, SEE DRAINAGE PLANS.
4. SEE SYSTEMS PLANS FOR DUCTBANK AND CABLE TROUGH DETAILS.
5. SEE URBAN DESIGN PLANS FOR FENCE LOCATION AND DETAILS.
6. SELECT GRANULAR DEPTH: STA 2566+21.50: 3.33'; STA 2566+68.00 TO STA 2572+54.11: 1.00'. TRANSITION LINEARLY BETWEEN STA 2566+21.50 AND STA 2566+68.00.
7. TRANSITION FROM 9.50' TO 7.00' BETWEEN STA 2566+21.50 AND STA 2566+68.00.

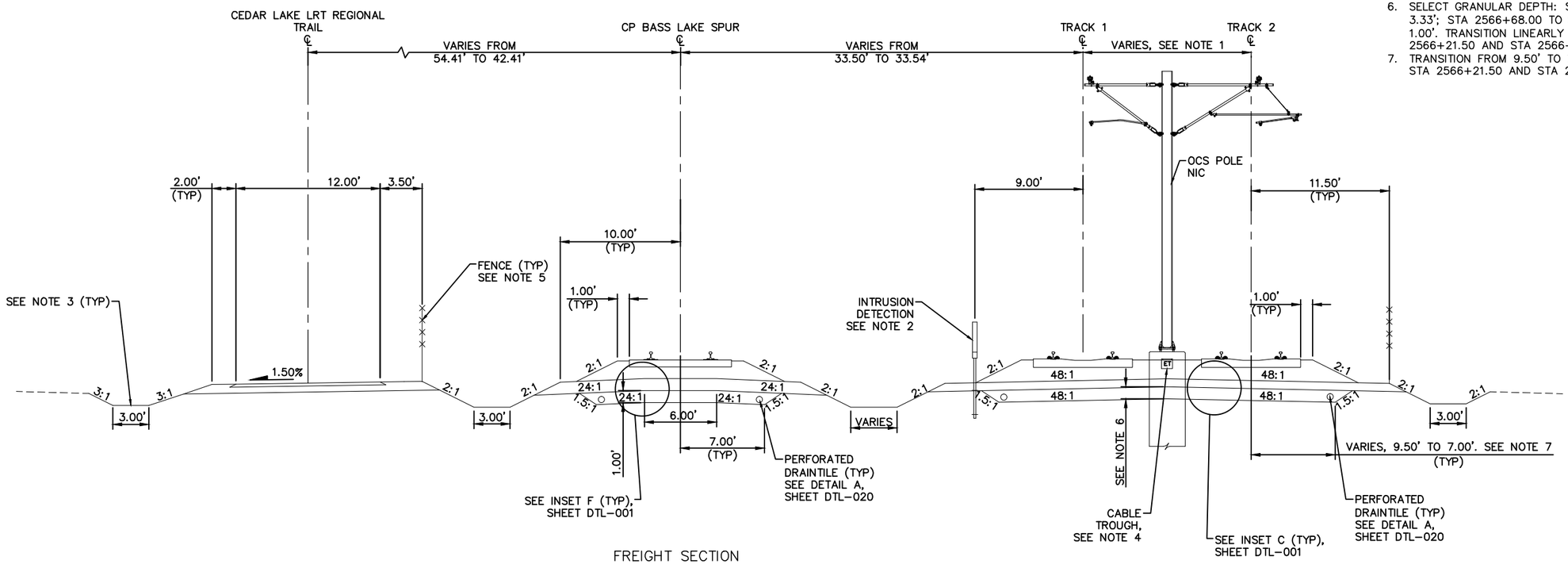

FREIGHT SECTION
STA 71+65.43 TO STA 78+00.75

TYPICAL SECTION
STA 2566+21.50 TO STA 2572+54.11

SCALE 0 2.5 5 10 IN FEET

NO.	DATE	BY	CHECK	DESIGN	REVISION / SUBMITTAL

AECOM

90% SUBMISSION - 01/22/16

METROPOLITAN COUNCIL

SOUTHWEST Green Line LRT Extension

CIVIL - VOLUME 3B
TRACK
TYPICAL SECTIONS

DISCIPLINE: TRACK

SHEET NAME: E1-TRK-TYP-022

SHEET 65 OF 420

Jan. 15 2016 10:22 am V:\3400_ADC\CAD\00_EAST\PLANSHEETS\TRACK\E1-TRK-TYP.dwg By: V-RasulL

NOTES:
1. TRACK CENTERS WIDEN FROM 20.00' TO 30.38' BETWEEN STA 2571+31.62 AND STA 2574+33.90.
2. SEE SYSTEM PLANS FOR INTRUSION DETECTION DETAILS.
3. SELECT GRANULAR DEPTH: STA 2572+54.11 TO STA 2574+23.00: 1.00'. STA 2574+43.62: 2.00'. TRANSITION LINEARLY BETWEEN STA 2574+23.00 AND STA 2574+43.62.
4. TRANSITION FROM 7.00' TO 8.00' BETWEEN STA 2574+23.00 AND STA 2574+43.62.
5. SEE URBAN DESIGN PLANS FOR FENCE LOCATION AND DETAILS.
6. FOR DITCH INVERT AND DETAILS, SEE DRAINAGE PLANS.
7. SEE SYSTEMS PLANS FOR DUCTBANK AND CABLE TROUGH DETAILS.
8. SEE RETAINING WALL PLANS FOR DETAILS.

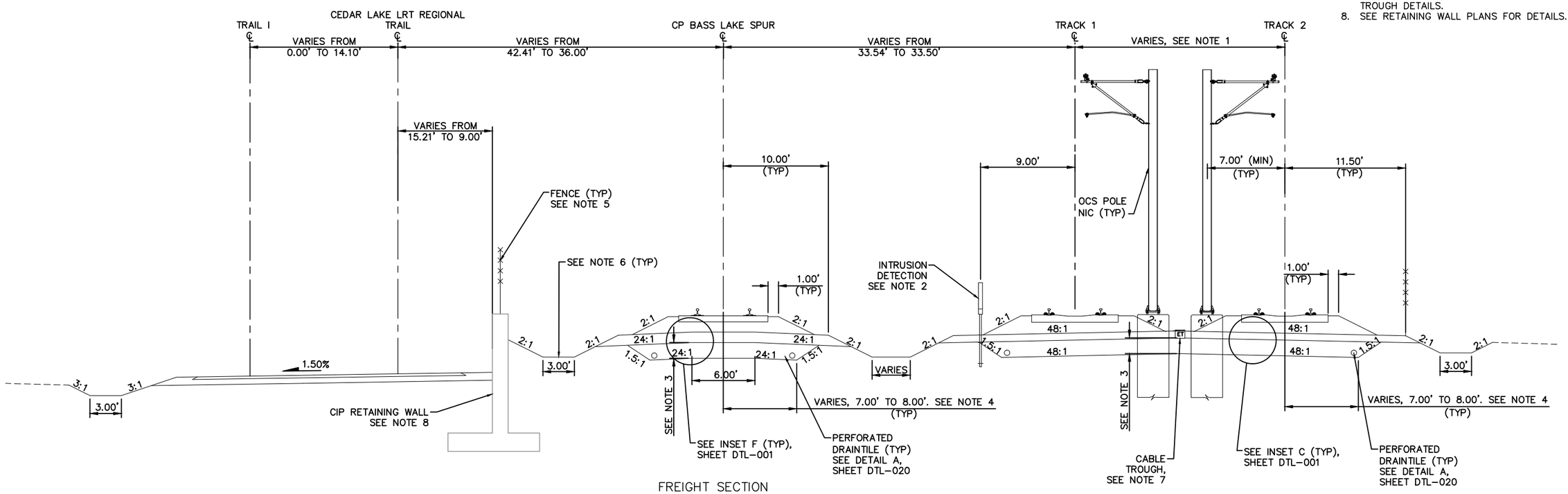

FREIGHT SECTION
STA 78+00.75 TO STA 79+87.20

TYPICAL SECTION
STA 2572+54.11 TO STA 2574+43.62

SCALE 0 2.5 5 10 IN FEET

NO.	DATE	BY	CHECK	DESIGN	REVISION / SUBMITTAL

AECOM

90% SUBMISSION - 01/22/16

METROPOLITAN COUNCIL

SOUTHWEST Green Line LRT Extension

CIVIL - VOLUME 3B
TRACK
TYPICAL SECTIONS

DISCIPLINE: TRACK

SHEET NAME: E1-TRK-TYP-023

SHEET 66 OF 420

Jan, 15 2016 10:22 am V:\3400_ADC\CAD\00_EAST\PLANSHEETS\TRACK\E1-TRK-TYP.dwg By: V-RasulL

NOTES:
1. SEE SYSTEM PLANS FOR INTRUSION DETECTION DETAILS.
2. SELECT GRANULAR DEPTH: STA 2574+43.62 TO STA 2574+98.00: 2.00'. STA 2575+08.90: 2.50'. TRANSITION LINEARLY BETWEEN STA 2574+98.00 AND STA 2575+08.90.
3. TRANSITION FROM 8.00' TO 8.50' BETWEEN STA 2574+98.00 AND STA 2575+08.90.
4. SEE URBAN DESIGN PLANS FOR FENCE LOCATION AND DETAILS.
5. FOR DITCH INVERT AND DETAILS, SEE DRAINAGE PLANS.
6. SEE SYSTEMS PLANS FOR DUCTBANK AND CABLE TROUGH DETAILS.
7. SEE RETAINING WALL PLANS FOR DETAILS.
8. CIP WALL STARTS AT STA 2574+43.62.

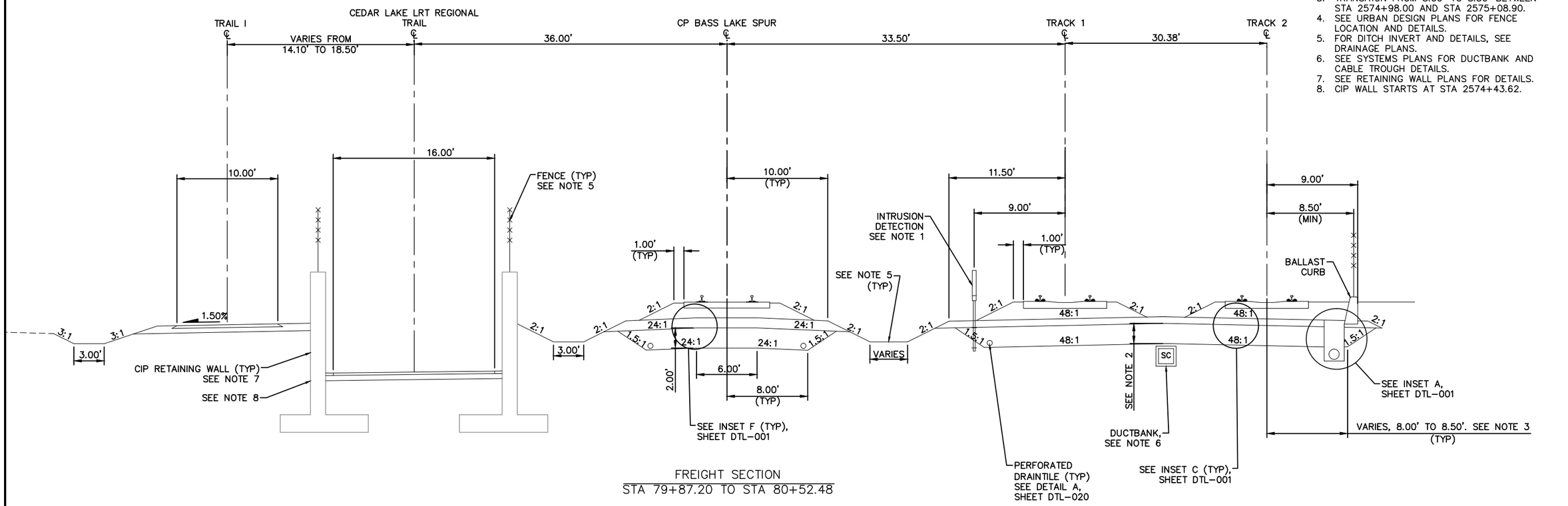

FREIGHT SECTION
STA 79+87.20 TO STA 80+52.48

TYPICAL SECTION
STA 2574+43.62 TO STA 2575+08.90

SCALE 0 2.5 5 10 IN FEET

NO.	DATE	BY	CHECK	DESIGN	REVISION / SUBMITTAL

AECOM

90% SUBMISSION - 01/22/16

METROPOLITAN COUNCIL

SOUTHWEST Green Line LRT Extension

CIVIL - VOLUME 3B
TRACK
TYPICAL SECTIONS

DISCIPLINE: TRACK

SHEET NAME: E1-TRK-TYP-024

SHEET 67 OF 420

Jan, 15 2016 10:22 am V:\3400_ADC\CAD\00_EAST\PLANSHEETS\TRACK\E1-TRK-TYP.dwg By: V-RasulL

NOTES:
1. SEE STATION PLANS FOR STATION PLATFORM DETAILS.
2. SEE SYSTEM PLANS FOR INTRUSION DETECTION DETAILS.
3. MnDOT BRIDGE 27J60. SEE STRUCTURE PLANS.
4. SEE SYSTEMS PLANS FOR DUCTBANK AND CABLE TROUGH DETAILS.
5. SEE URBAN DESIGN PLANS FOR FENCE LOCATION AND DETAILS.
6. FOR DITCH INVERT AND DETAILS, SEE DRAINAGE PLANS.
7. SELECT GRANULAR DEPTH (BASS LAKE SPUR): LRT STA 2575+08.90: 2.00'. LRT STA 2575+30.00 TO STA 2577+78.90: 1.00'. TRANSITION LINEARLY BETWEEN STA 2575+08.90 AND STA 2575+30.00.
8. TRANSITION FROM 8.00' TO 7.00' BETWEEN STA 2575+08.90 AND STA 2575+30.00.
9. BLAKE RD UNDERPASS IS NOT ILLUSTRATED. SEE CIVIL PLANS.

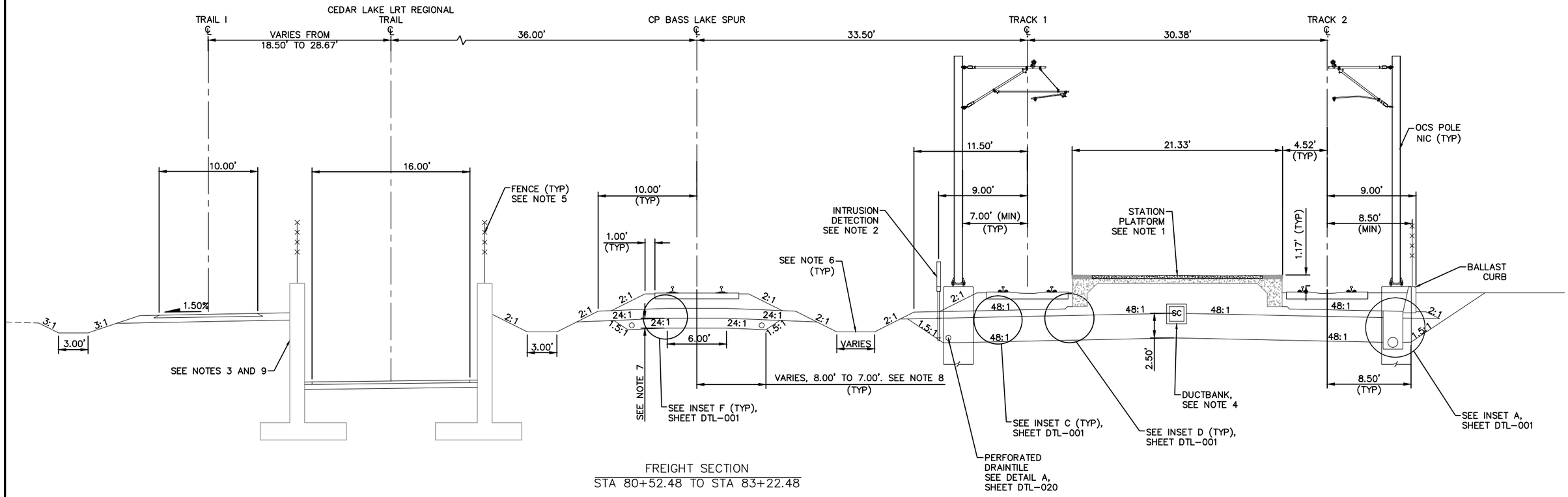

FREIGHT SECTION
STA 80+52.48 TO STA 83+22.48

TYPICAL SECTION – BLAKE STATION
STA 2575+08.90 TO STA 2577+78.90

SCALE 0 2.5 5 10 IN FEET

NO.	DATE	BY	CHECK	DESIGN	REVISION / SUBMITTAL

AECOM

90% SUBMISSION - 01/22/16

METROPOLITAN COUNCIL

SOUTHWEST Green Line LRT Extension

CIVIL - VOLUME 3B
TRACK
TYPICAL SECTIONS

DISCIPLINE: TRACK

SHEET NAME: E1-TRK-TYP-025

SHEET 68 OF 420

Jan, 15 2016 10:22 am V:\3400_ADC\CAD\00_EAST\PLANSHEETS\TRACK\E1-TRK-TYP.dwg By: V-RasulL

NOTES:
1. TRACK CENTERS NARROW FROM 30.38' TO 30.37' BETWEEN STA 2579+73.90 AND STA 2579+90.53.
2. SECTION DOES NOT ILLUSTRATE GRADE CROSSING AT BLAKE ROAD. SEE TRACK PLANS AND DETAILS.
3. MnDOT BRIDGE 27J60. SEE STRUCTURE PLANS.
4. CIP WALL STARTS AT STA. 2579+04.20.
5. SEE SYSTEM PLANS FOR INTRUSION DETECTION DETAILS.
6. FOR INSETS SEE CIVIL PLANS.
7. SEE SYSTEMS PLANS FOR DUCTBANK AND CABLE TROUGH DETAILS.
8. SEE URBAN DESIGN PLANS FOR FENCE LOCATION AND DETAILS.
9. FOR DITCH INVERT AND DETAILS, SEE DRAINAGE PLANS.
10. SELECT GRANULAR DEPTH: STA 2577+78.90: 2.50'; STA 2578+10.00 TO STA 2579+90.53: 1.00'. TRANSITION LINEARLY BETWEEN STA 2577+78.90 AND STA 2578+10.00.
11. TRANSITION FROM 8.50' TO 7.00' BETWEEN STA 2577+78.90 AND STA 2578+10.00.
12. BLAKE RD UNDERPASS IS NOT ILLUSTRATED. SEE BRIDGE PLANS.

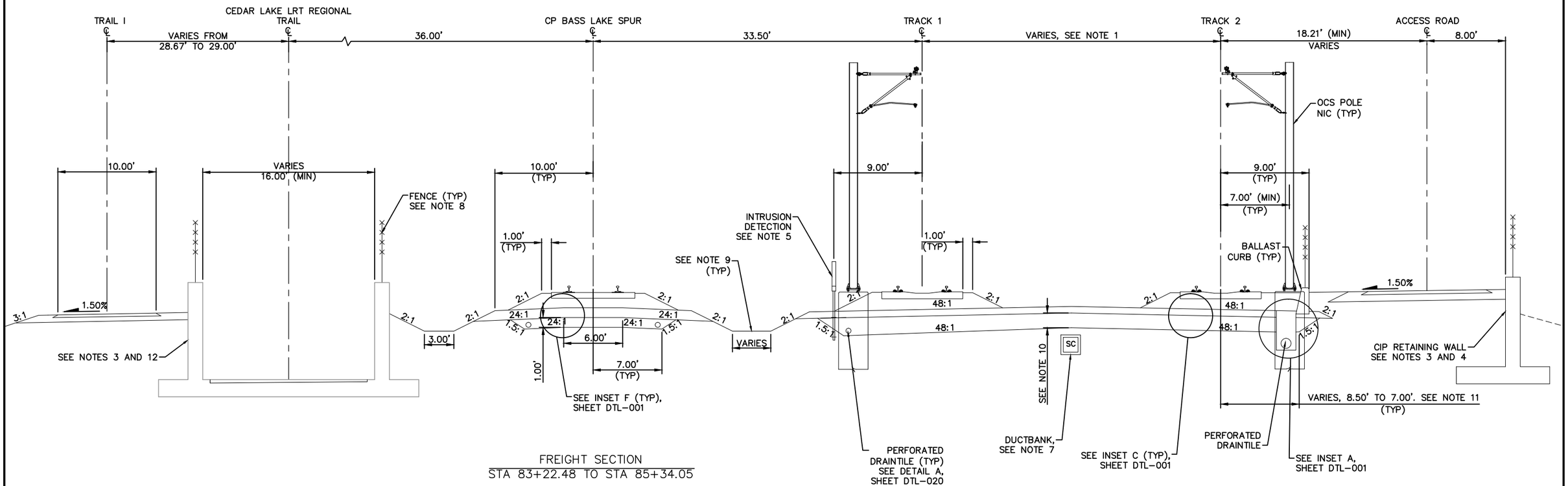

FREIGHT SECTION
STA 83+22.48 TO STA 85+34.05

TYPICAL SECTION
STA 2577+78.90 TO STA 2579+90.53

SCALE 0 2.5 5 10 IN FEET

NO.	DATE	BY	CHECK	DESIGN	REVISION / SUBMITTAL

AECOM

90% SUBMISSION - 01/22/16

METROPOLITAN COUNCIL

SOUTHWEST Green Line LRT Extension

CIVIL - VOLUME 3B
TRACK
TYPICAL SECTIONS

DISCIPLINE: TRACK

SHEET NAME: E1-TRK-TYP-026

SHEET 69 OF 420

Jan, 15 2016 10:22 am V:\3400_ADC\CAD\00_EAST\PLANSHEETS\TRACK\E1-TRK-TYP.dwg By: V-RasulL

NOTES:
1. TRACK CENTERS NARROW FROM 30.37' TO 27.72' BETWEEN STA 2579+90.53 AND STA 2581+25.00.
2. SEE RETAINING WALL PLANS FOR DETAILS.
3. FOR DITCH INVERT AND DETAILS, SEE DRAINAGE PLANS.
4. SEE SYSTEM PLANS FOR INTRUSION DETECTION DETAILS.
5. CIP WALL ENDS AT STA 2580+23.64.
6. SEE SYSTEMS PLANS FOR DUCTBANK AND CABLE TROUGH DETAILS.
7. SEE URBAN DESIGN PLANS FOR FENCE LOCATION AND DETAILS.
8. BLAKE RD UNDERPASS IS NOT ILLUSTRATED. SEE STRUCTURE PLANS.

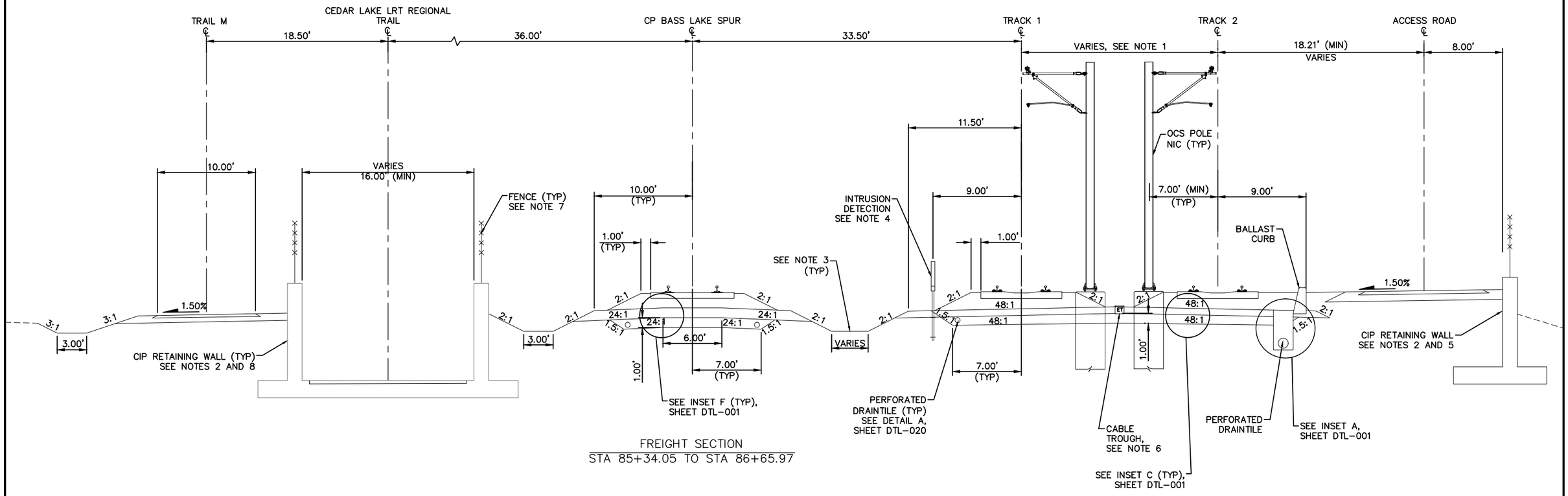

FREIGHT SECTION
STA 85+34.05 TO STA 86+65.97

TYPICAL SECTION
STA 2579+90.53 TO STA 2581+25.00

SCALE 0 2.5 5 10 IN FEET

NO.	DATE	BY	CHECK	DESIGN	REVISION / SUBMITTAL

AECOM

90% SUBMISSION - 01/22/16

METROPOLITAN COUNCIL

SOUTHWEST Green Line LRT Extension

CIVIL - VOLUME 3B
TRACK
TYPICAL SECTIONS

DISCIPLINE: TRACK

SHEET NAME: E1-TRK-TYP-027

SHEET 70 OF 420

Jan, 15 2016 10:22 am V:\3400_ADC\CAD\00_EAST\PLANSHEETS\TRACK\E1-TRK-TYP.dwg By: V-RasulL

NOTES:
1. TRACK CENTERS NARROW FROM 27.72' TO 20.00' BETWEEN STA 2581+25.00 AND STA 2582+76.12.
2. SEE SYSTEM PLANS FOR INTRUSION DETECTION DETAILS.
3. SEE RETAINING WALL PLANS FOR DETAILS.
4. SEE SYSTEMS PLANS FOR DUCTBANK AND CABLE TROUGH DETAILS.
5. SEE URBAN DESIGN PLANS FOR FENCE LOCATION AND DETAILS.
6. FOR DITCH INVERT AND DETAILS, SEE DRAINAGE PLANS.

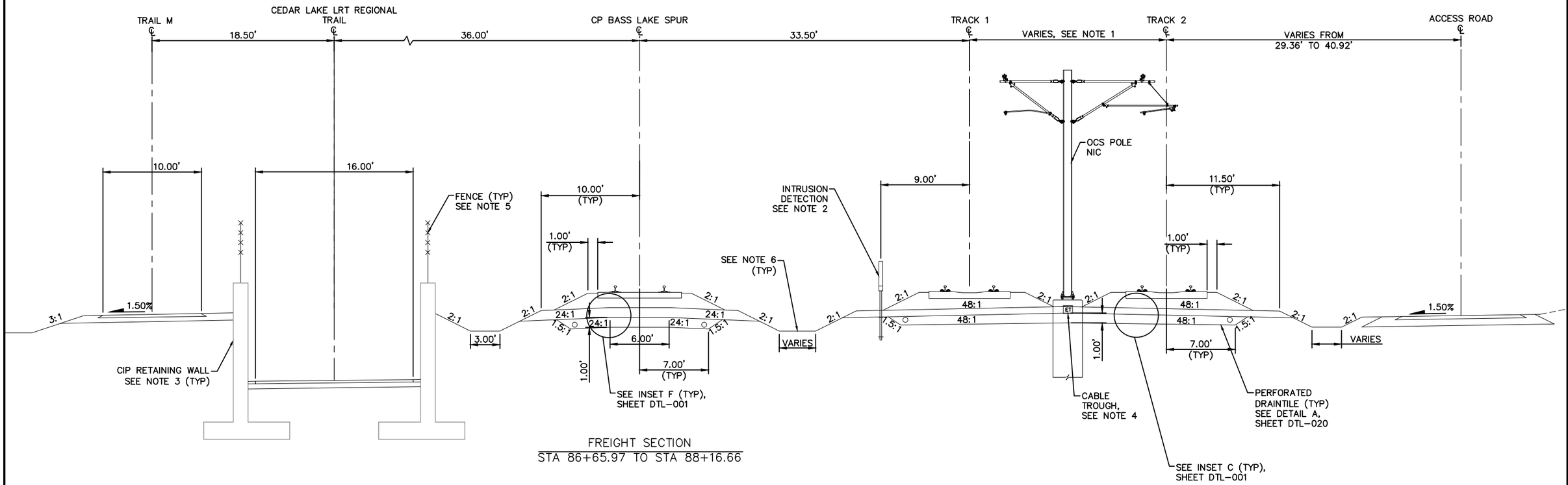

FREIGHT SECTION
STA 86+65.97 TO STA 88+16.66

TYPICAL SECTION
STA 2581+25.00 TO STA 2582+76.12

SCALE 0 2.5 5 10 IN FEET

NO.	DATE	BY	CHECK	DESIGN	REVISION / SUBMITTAL

AECOM

90% SUBMISSION - 01/22/16

METROPOLITAN COUNCIL

SOUTHWEST Green Line LRT Extension

CIVIL - VOLUME 3B
TRACK
TYPICAL SECTIONS

SHEET 71 OF 420

DISCIPLINE: TRACK

SHEET NAME: E1-TRK-TYP-028

Jan, 15 2016 10:22 am V:\3400_ADC\CAD\00_EAST\PLANSHEETS\TRACK\E1-TRK-TYP.dwg By: V-RosulL

NOTES:
1. TRACK CENTERS NARROW FROM 20.00' TO 14.00' BETWEEN STA 2582+76.12 AND STA 2584+93.82.
2. SEE SYSTEM PLANS FOR INTRUSION DETECTION DETAILS.
3. BALLAST CURB AND PERFORATED DRAINTILE FROM STA 2592+25.00 TO STA 2596+00.00.
4. SEE SYSTEMS PLANS FOR DUCTBANK AND CABLE TROUGH DETAILS.
5. SEE RETAINING WALL PLANS FOR DETAILS.
6. CIP WALL ENDS AT STA 2583+39.88.
7. SEE URBAN DESIGN PLANS FOR FENCE LOCATION AND DETAILS.
8. FOR DITCH INVERT AND DETAILS, SEE DRAINAGE PLANS.
9. CIP WALL ENDS AT STA 2584+88.33.

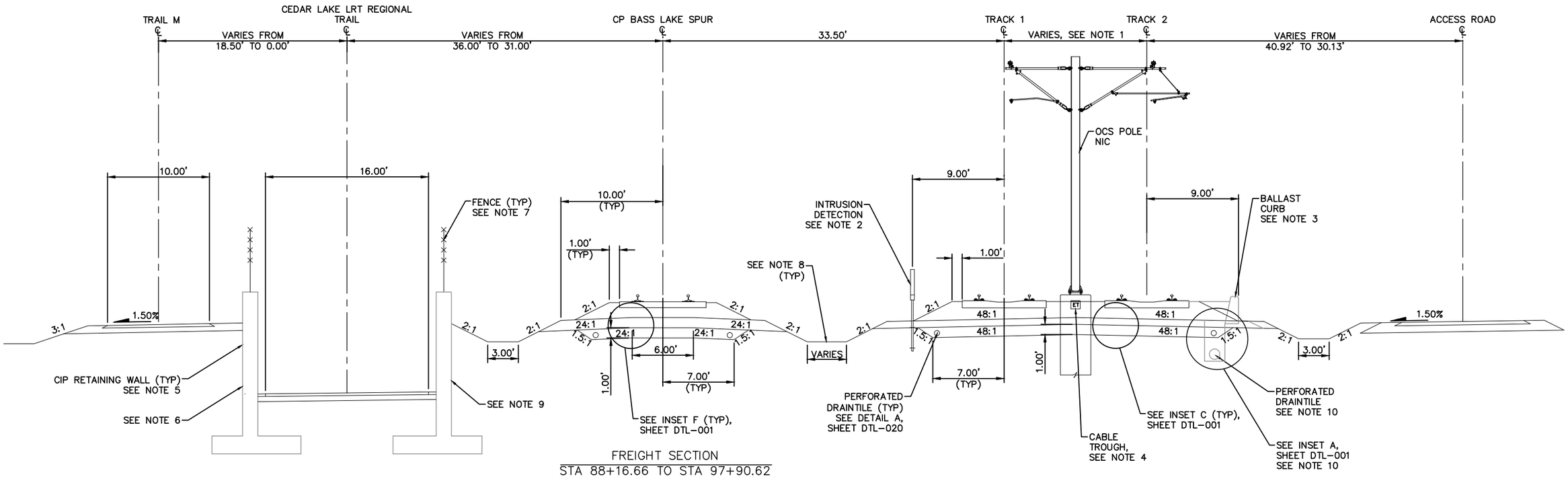

FREIGHT SECTION
STA 88+16.66 TO STA 97+90.62

TYPICAL SECTION
STA 2582+76.12 TO STA 2592+47.40
STA 2595+00.00 TO STA 2596+00.00

SCALE 0 2.5 5 10 IN FEET

NO.	DATE	BY	CHECK	DESIGN	REVISION / SUBMITTAL

AECOM

90% SUBMISSION - 01/22/16

METROPOLITAN COUNCIL

SOUTHWEST Green Line LRT Extension

CIVIL - VOLUME 3B
TRACK
TYPICAL SECTIONS

DISCIPLINE: TRACK

SHEET NAME: E1-TRK-TYP-029

SHEET 72 OF 420

Jan, 15 2016 10:23 am V:\3400_ADC\CAD\00_EAST\PLANSHEETS\TRACK\E1-TRK-TYP.dwg By: V-RasulL

NOTES:
1. SEE RETAINING WALL PLANS FOR DETAILS.
2. SEE SYSTEM PLANS FOR INTRUSION DETECTION DETAILS.
3. FOR DITCH INVERT AND DETAILS, SEE DRAINAGE PLANS.
4. SEE SYSTEM PLANS FOR DUCTBANK AND CABLE TROUGH DETAILS.
5. CIP WALL STARTS AT 2601+59.47.
6. SEE URBAN DESIGN PLANS FOR FENCE LOCATION AND DETAILS.

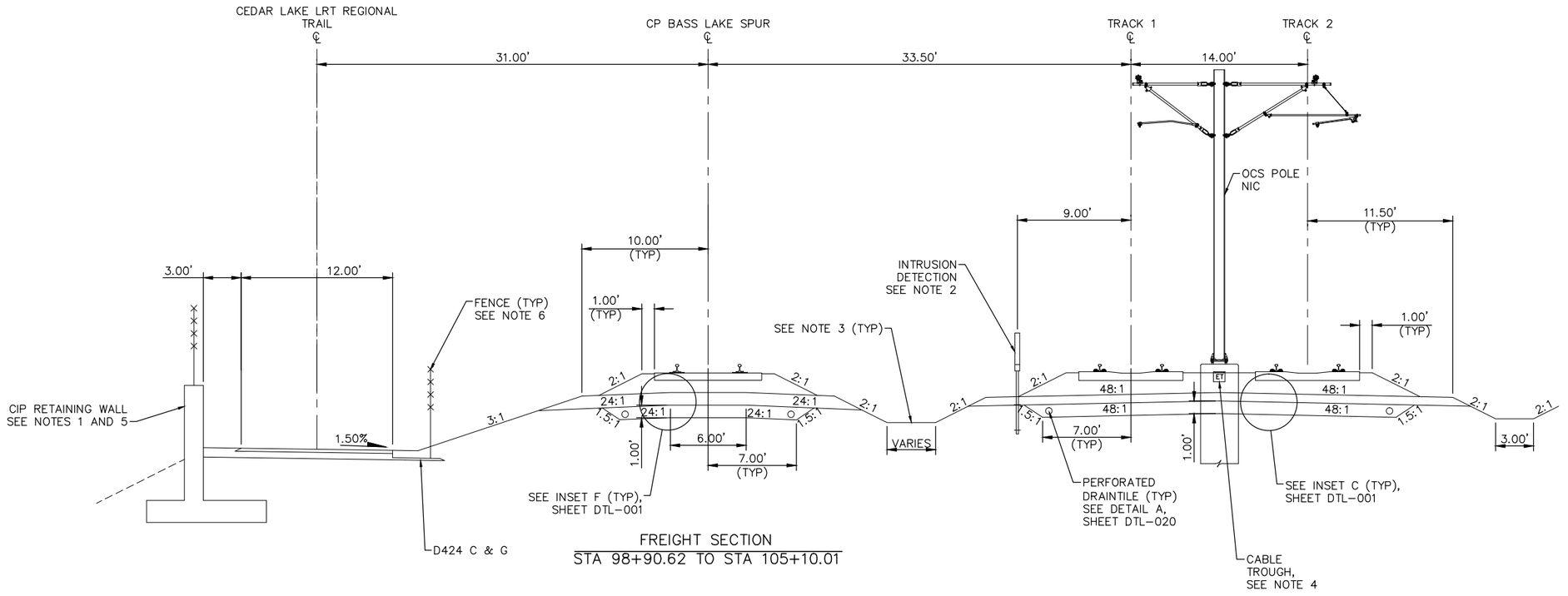

FREIGHT SECTION
STA 98+90.62 TO STA 105+10.01

TYPICAL SECTION
STA 2596+00.00 TO STA 2602+19.39

SCALE 0 2.5 5 10 IN FEET

NO.	DATE	BY	CHECK	DESIGN	REVISION / SUBMITTAL

AECOM

90% SUBMISSION - 01/22/16

METROPOLITAN COUNCIL

SOUTHWEST Green Line LRT Extension

CIVIL - VOLUME 3B
TRACK
TYPICAL SECTIONS

SHEET 73 OF 420

DISCIPLINE: TRACK

SHEET NAME: E2-TRK-TYP - 001

Jan. 15 2016 11:47 am V:\3400_ADC\CAD\00_EAST\PLANSHEETS\TRACK\E2-TRK-TYP.dwg By: V-RasulL

NOTES:
1. SEE RETAINING WALL PLANS FOR DETAILS.
2. SEE SYSTEM PLANS FOR INTRUSION DETECTION DETAILS.
3. FOR DITCH INVERT AND DETAILS, SEE DRAINAGE PLANS.
4. SEE SYSTEM PLANS FOR DUCTBANK AND CABLE TROUGH DETAILS.
5. SEE URBAN DESIGN PLANS FOR FENCE LOCATION AND DETAILS.
6. CIP WALL ENDS AT STA 2602+49.89.

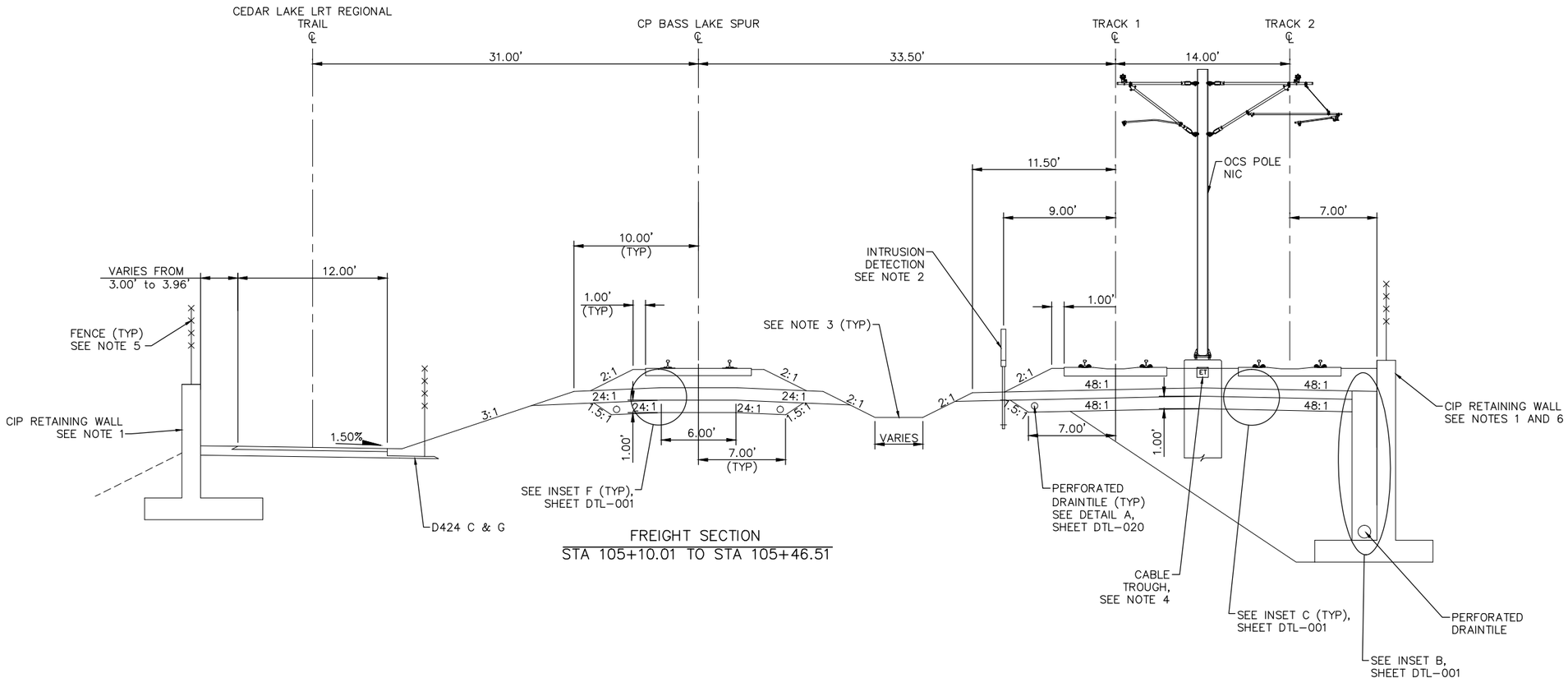

FREIGHT SECTION
STA 105+10.01 TO STA 105+46.51

TYPICAL SECTION
STA 2602+19.39 TO STA 2602+57.06

SCALE 0 2.5 5 10 IN FEET

NO.	DATE	BY	CHECK	DESIGN	REVISION / SUBMITTAL

AECOM

90% SUBMISSION - 01/22/16

METROPOLITAN COUNCIL

SOUTHWEST Green Line LRT Extension

CIVIL - VOLUME 3B
TRACK
TYPICAL SECTIONS

SHEET 74 OF 420

DISCIPLINE: TRACK

SHEET NAME: E2-TRK-TYP-002

Jan. 15 2016 11:47 am V:\3400_ADC\CAD\00_EAST\PLANSHEETS\TRACK\E2-TRK-TYP.dwg By: V-RasulL

NOTES:
1. MnDOT BRIDGE R0687. SEE STRUCTURAL PLANS.
2. MnDOT BRIDGE R0688. SEE STRUCTURAL PLANS.
3. MnDOT BRIDGE R0689. SEE STRUCTURAL PLANS.
4. SEE SYSTEM PLANS FOR DUCTBANK AND CABLE TROUGH DETAILS.
5. FOR GUARD RAIL LIMITS SEE TRACK CHARTS.

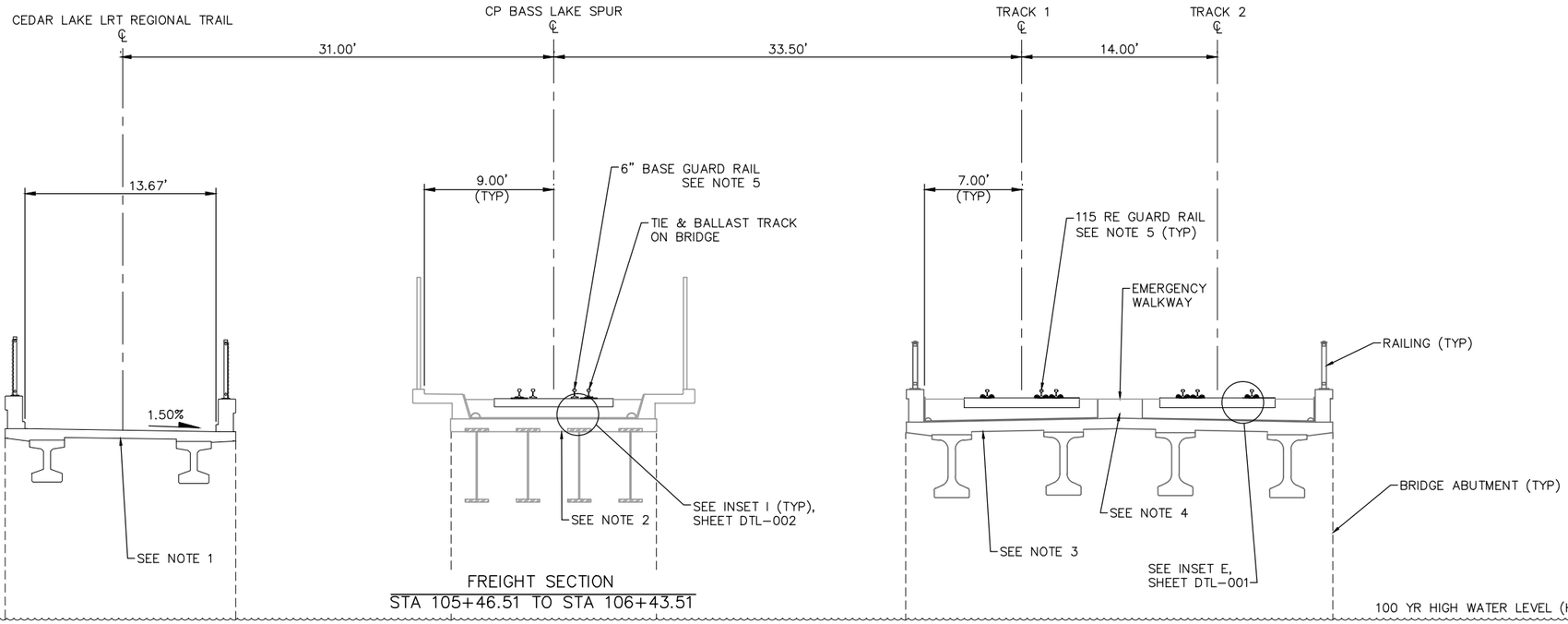

FREIGHT SECTION
STA 105+46.51 TO STA 106+43.51

TYPICAL SECTION
STA 2602+57.06 TO STA 2603+51.72

SCALE 0 2.5 5 10 IN FEET

NO.	DATE	BY	CHECK	DESIGN	REVISION / SUBMITTAL

AECOM

90% SUBMISSION - 01/22/16

METROPOLITAN COUNCIL

SOUTHWEST Green Line LRT Extension

CIVIL - VOLUME 3B
TRACK
TYPICAL SECTIONS

DISCIPLINE: TRACK

SHEET NAME: E2-TRK-TYP-003

SHEET 75 OF 420

Jan. 15 2016 11:47 am V:\3400_ADC\CAD\00_EAST\PLANSHEETS\TRACK\E2-TRK-TYP.dwg By: V-RasulL

NOTES:
1. SEE RETAINING WALL PLANS FOR DETAILS.
2. SEE SYSTEM PLANS FOR INTRUSION DETECTION DETAILS.
3. FOR DITCH INVERT AND DETAILS, SEE DRAINAGE PLANS.
4. SEE SYSTEM PLANS FOR DUCTBANK AND CABLE TROUGH DETAILS.
5. SEE URBAN DESIGN PLANS FOR FENCE LOCATION AND DETAILS.

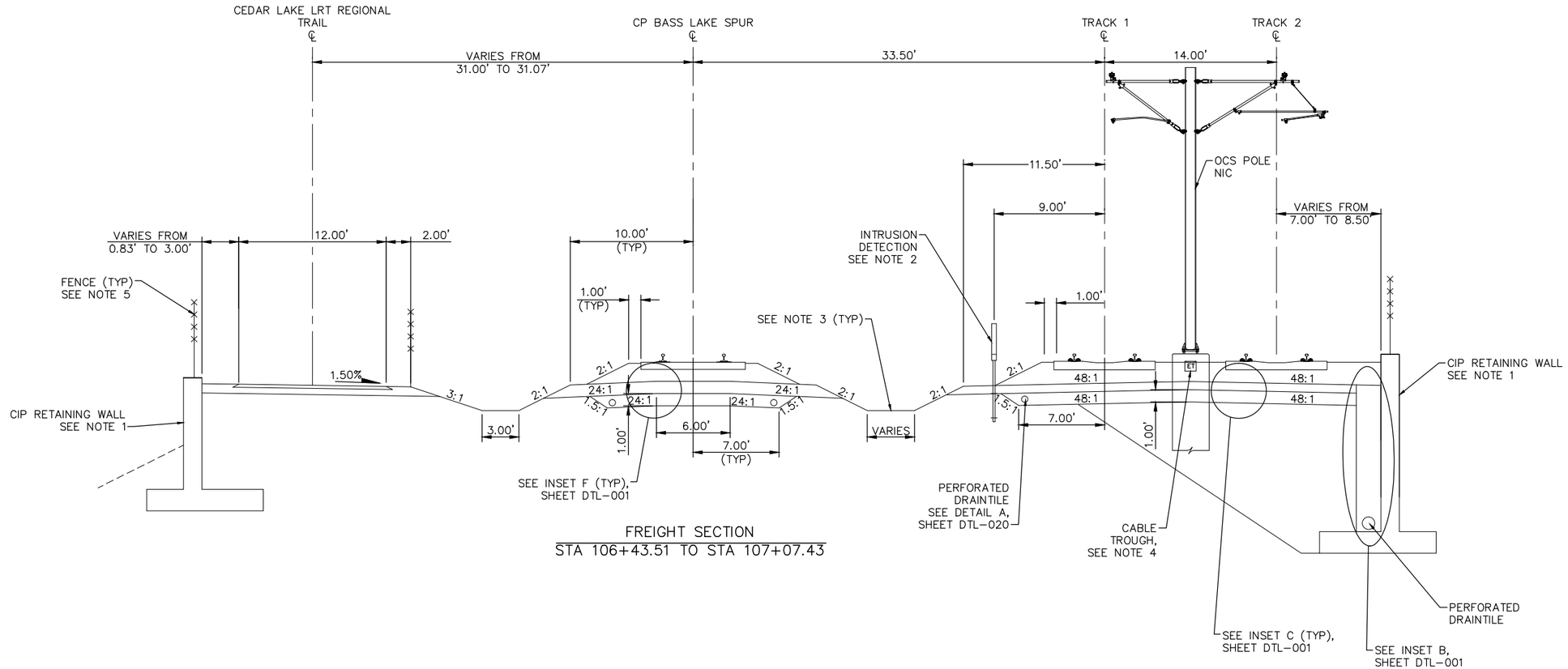

FREIGHT SECTION
STA 106+43.51 TO STA 107+07.43

TYPICAL SECTION
STA 2603+51.72 TO STA 2604+16.81

SCALE 0 2.5 5 10 IN FEET

NO.	DATE	BY	CHECK	DESIGN	REVISION / SUBMITTAL

AECOM

90% SUBMISSION - 01/22/16

METROPOLITAN COUNCIL

SOUTHWEST Green Line LRT Extension

CIVIL - VOLUME 3B
TRACK
TYPICAL SECTIONS

DISCIPLINE: TRACK

SHEET NAME: E2-TRK-TYP-004

SHEET 76 OF 420

Jan, 15 2016 11:48 am v:\3400_ADC\CAD\00_EAST\PLANSHEETS\TRACK\E2-TRK-TYP.dwg By: V-RasulL

NOTES:
1. SEE RETAINING WALL PLANS FOR DETAILS.
2. SEE SYSTEM PLANS FOR INTRUSION DETECTION DETAILS.
3. FOR DITCH INVERT AND DETAILS, SEE DRAINAGE PLANS.
4. SEE SYSTEM PLANS FOR DUCTBANK AND CABLE TROUGH DETAILS.
5. SEE URBAN DESIGN PLANS FOR FENCE LOCATION AND DETAILS.

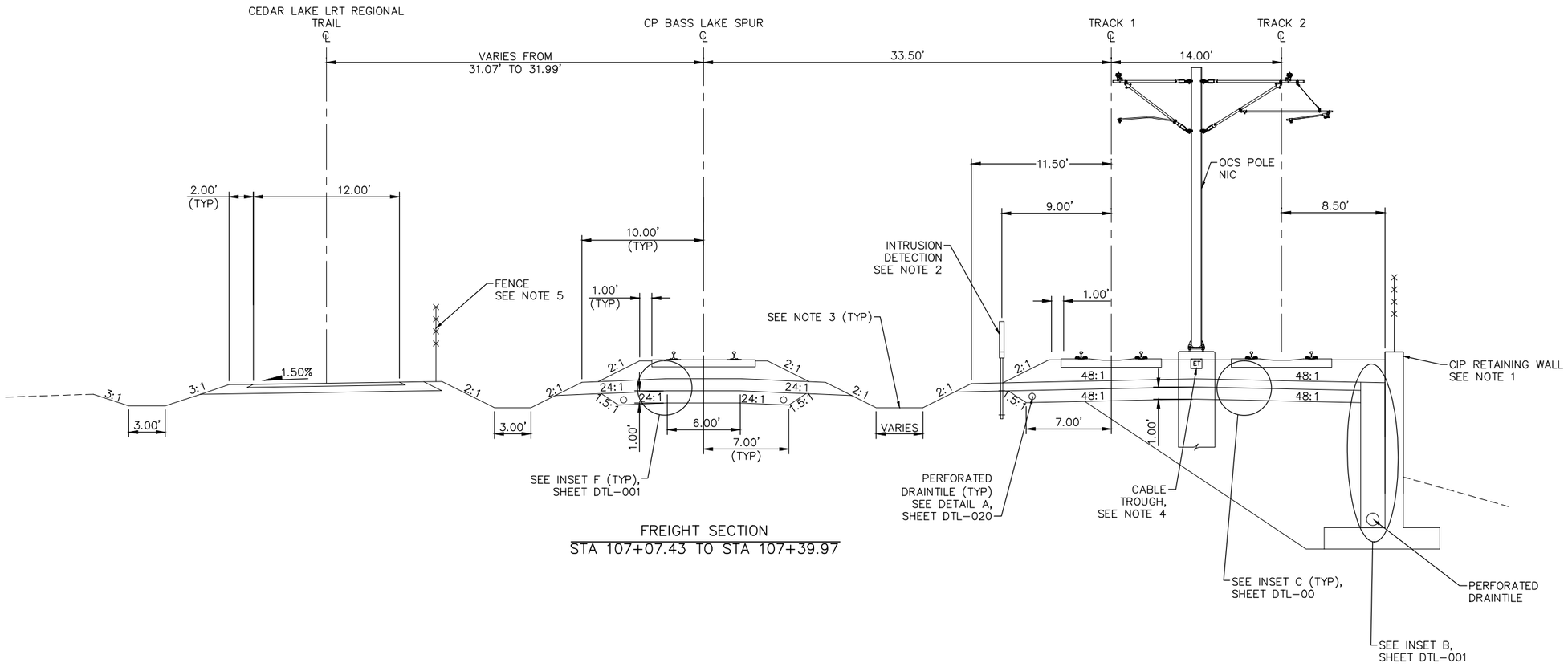

FREIGHT SECTION
STA 107+07.43 TO STA 107+39.97

TYPICAL SECTION
STA 2604+16.81 TO STA 2604+49.35

SCALE 0 2.5 5 10 IN FEET

NO.	DATE	BY	CHECK	DESIGN	REVISION / SUBMITTAL

AECOM

90% SUBMISSION - 01/22/16

METROPOLITAN COUNCIL

SOUTHWEST Green Line LRT Extension

CIVIL - VOLUME 3B
TRACK
TYPICAL SECTIONS

SHEET 77 OF 420

DISCIPLINE: TRACK

SHEET NAME: E2-TRK-TYP-005

Jan, 15 2016 11:48 am V:\3400_ADC\CAD\00_EAST\PLANSHEETS\TRACK\E2-TRK-TYP.dwg By: V-RasulL

NOTES:
1. SEE SYSTEM PLANS FOR INTRUSION DETECTION DETAILS.
2. FOR DITCH INVERT AND DETAILS, SEE DRAINAGE PLANS.
3. SEE SYSTEM PLANS FOR DUCTBANK AND CABLE TROUGH DETAILS.
4. SEE URBAN DESIGN PLANS FOR FENCE LOCATION AND DETAILS.

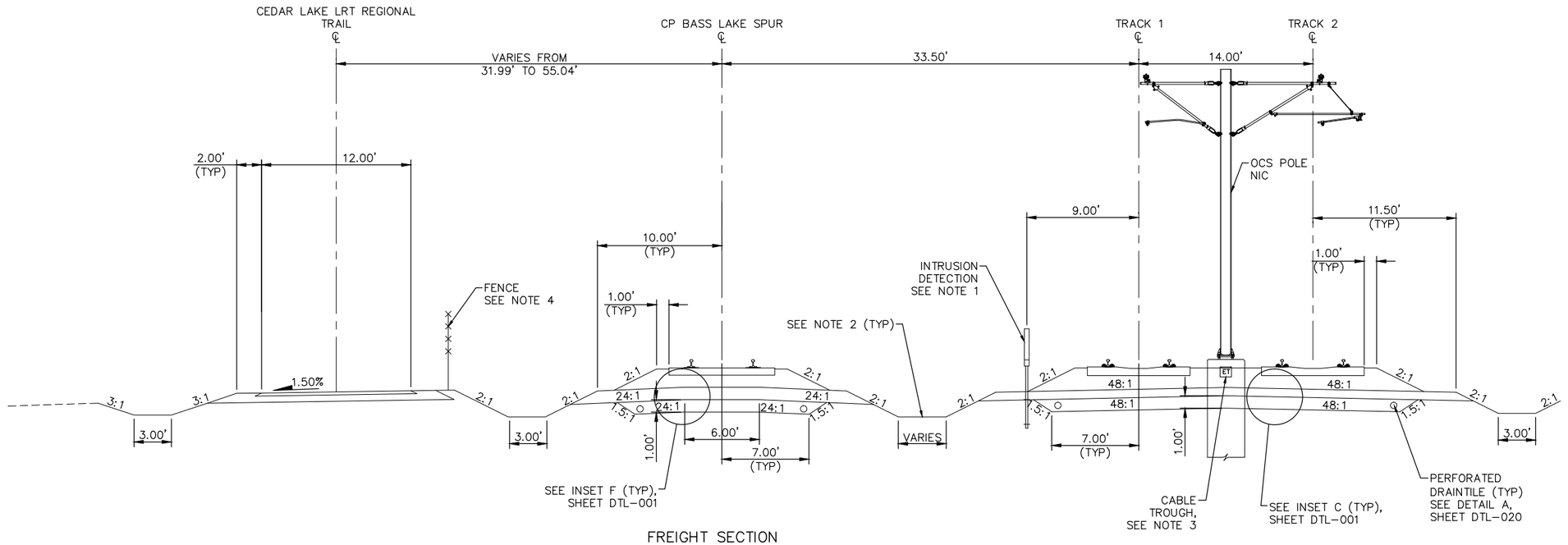

FREIGHT SECTION
STA 107+39.97 TO STA 116+40.62

TYPICAL SECTION
STA 2604+49.35 TO STA 2613+50.00

SCALE 0 2.5 5 10 IN FEET

NO.	DATE	BY	CHECK	DESIGN	REVISION / SUBMITTAL

AECOM

90% SUBMISSION - 01/22/16

METROPOLITAN COUNCIL

SOUTHWEST Green Line LRT Extension

CIVIL - VOLUME 3B
TRACK
TYPICAL SECTIONS

SHEET 78 OF 420

DISCIPLINE: TRACK

SHEET NAME: E2-TRK-TYP-006

Jan, 15 2016 11:48 am V:\3400_ADC\CAD\00_EAST\PLANSHEETS\TRACK\E2-TRK-TYP.dwg By: V-RasulL

NOTES:
1. TRACK CENTERS VARY IN CURVE E2–200. SEE TRACK PLANS.
2. SEE SYSTEM PLANS FOR INTRUSION DETECTION DETAILS.
3. FOR DITCH INVERT AND DETAILS, SEE DRAINAGE PLANS.
4. SEE SYSTEM PLANS FOR DUCTBANK AND CABLE TROUGH DETAILS.
5. SEE URBAN DESIGN PLANS FOR FENCE LOCATION AND DETAILS.
6. SELECT GRANULAR DEPTH: STA 2612+70.00 TO STA 2628+23.00: 1.00'; STA 2628+63.33: 3.00'. TRANSITION LINEARLY BETWEEN STA 2628+23.00 AND STA 2628+63.33.
7. TRANSITION FROM 7.00' TO 9.00' BETWEEN STA 2628+23.00 AND STA 2628+63.33.
8. SPECIAL TRACKWORK NOT ILLUSTRATED.

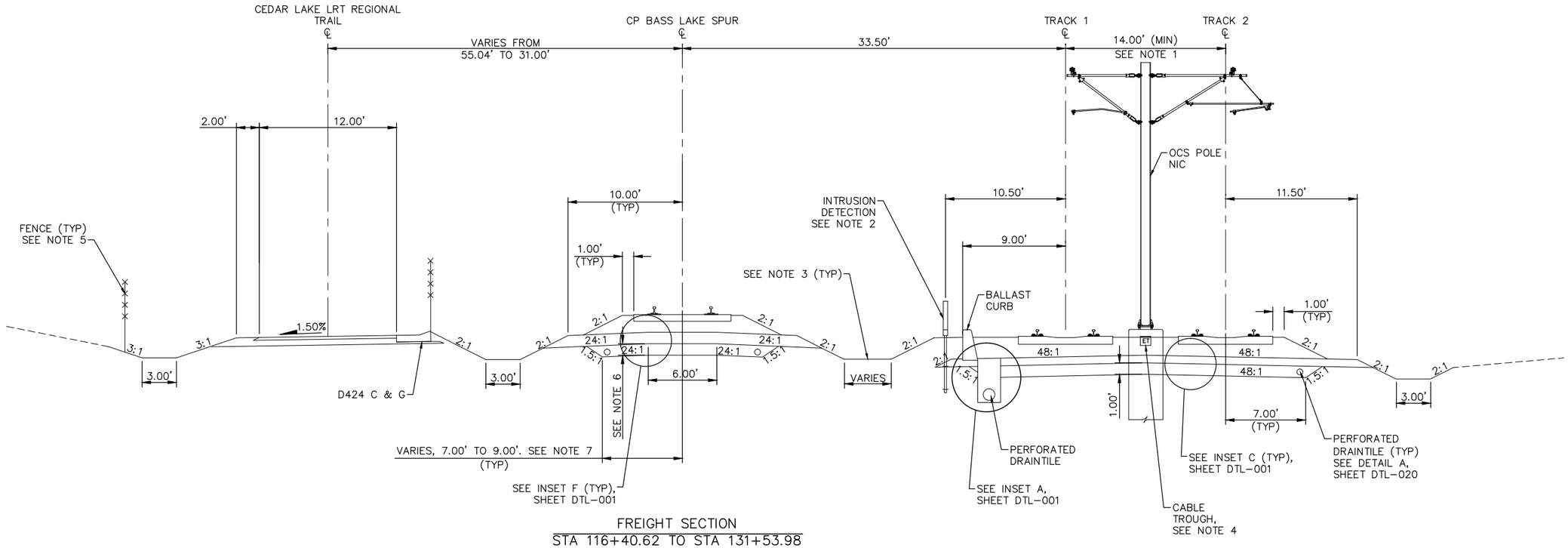

FREIGHT SECTION
STA 116+40.62 TO STA 131+53.98

TYPICAL SECTION
STA 2613+50.00 TO STA 2628+63.33

SCALE 0 2.5 5 10 IN FEET

NO.	DATE	BY	CHECK	DESIGN	REVISION / SUBMITTAL

AECOM

90% SUBMISSION - 01/22/16

METROPOLITAN COUNCIL

SOUTHWEST Green Line LRT Extension

CIVIL - VOLUME 3B
TRACK
TYPICAL SECTIONS

DISCIPLINE: TRACK

SHEET NAME: E2-TRK-TYP-007

SHEET 79 OF 420

Jan, 15 2016 11:49 am V:\3400_ADC\CAD\00_EAST\PLANSHEETS\TRACK\E2–TRK–TYP.dwg By: V–RasulL

NOTES:
1. TRACK CENTERS VARY IN CURVE E2–200. SEE TRACK PLANS.
2. SEE RETAINING WALL PLANS FOR DETAILS.
3. SEE SYSTEM PLANS FOR INTRUSION DETECTION DETAILS.
4. SEE RETAINING WALL PLANS FOR LOAD TRANSFER PLATFORM DETAILS.
5. SEE SYSTEM PLANS FOR DUCTBANK AND CABLE TROUGH DETAILS.
6. SEE URBAN DESIGN PLANS FOR FENCE LOCATION AND DETAILS.
7. FOR DITCH INVERT AND DETAILS, SEE DRAINAGE PLANS.
8. SEE SOIL CORRECTION TABLE FOR DETAILS.

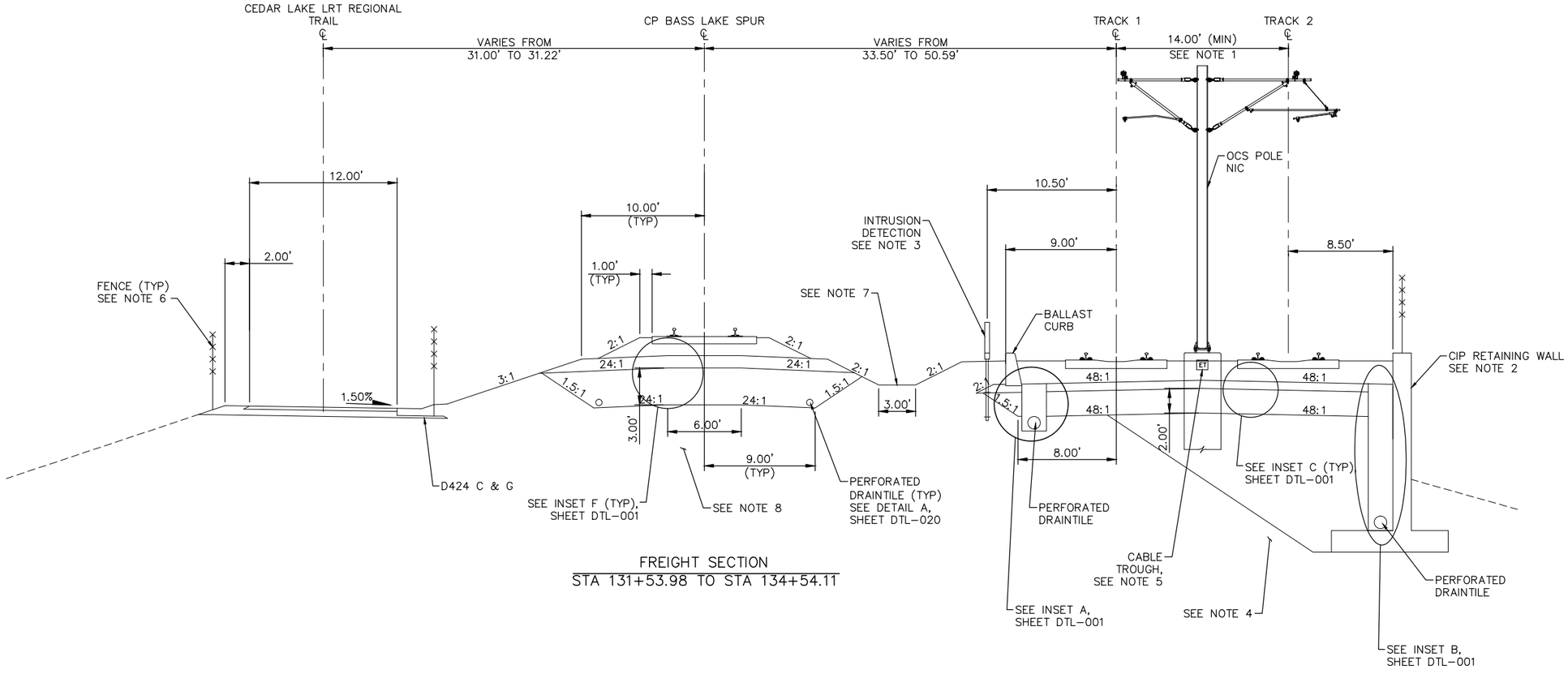

FREIGHT SECTION
STA 131+53.98 TO STA 134+54.11

TYPICAL SECTION
STA 2628+63.33 TO STA 2631+56.47

SCALE 0 2.5 5 10 IN FEET

NO.	DATE	BY	CHECK	DESIGN	REVISION / SUBMITTAL

AECOM

90% SUBMISSION - 01/22/16

METROPOLITAN COUNCIL

SOUTHWEST Green Line LRT Extension

CIVIL - VOLUME 3B
TRACK
TYPICAL SECTIONS

DISCIPLINE: TRACK

SHEET NAME: E2-TRK-TYP-008

SHEET 80 OF 420

Jan, 15 2016 11:49 am V:\3400_ADC\CAD\00_EAST\PLANSHEETS\TRACK\E2-TRK-TYP.dwg By: V-RasulL

NOTES:
1. TRACK CENTERS VARY IN CURVE E2–200. SEE TRACK PLANS.
2. SEE RETAINING WALL PLANS FOR DETAILS.
3. SEE SYSTEM PLANS FOR INTRUSION DETECTION DETAILS.
4. SEE RETAINING WALL PLANS FOR LOAD TRANSFER PLATFORM DETAILS.
5. SEE SYSTEM PLANS FOR DUCTBANK AND CABLE TROUGH DETAILS.
6. FOR GUARD RAIL LIMITS SEE TRACK CHARTS.
7. SEE URBAN DESIGN PLANS FOR FENCE LOCATION AND DETAILS.
8. FOR DITCH INVERT AND DETAILS, SEE DRAINAGE PLANS.
9. SEE SOIL CORRECTION TABLE FOR DETAILS.
10. CIP WALL ENDS AT STA 2632+00.02.
11. CIP WALL BEGINS AT STA 2631+56.47.

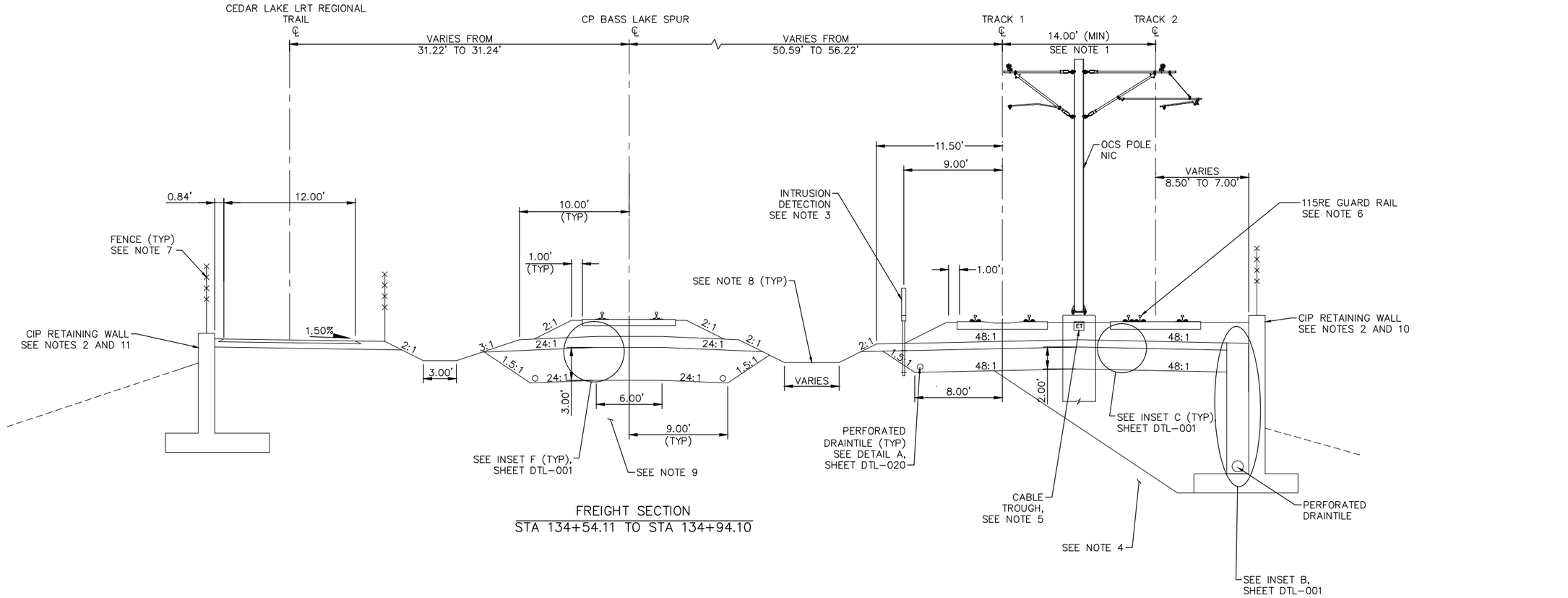

FREIGHT SECTION
STA 134+54.11 TO STA 134+94.10

TYPICAL SECTION
STA 2631+56.47 TO STA 2632+05.70

SCALE 0 2.5 5 10 IN FEET

NO.	DATE	BY	CHECK	DESIGN	REVISION / SUBMITTAL

AECOM

90% SUBMISSION - 01/22/16

METROPOLITAN COUNCIL

SOUTHWEST Green Line LRT Extension

CIVIL - VOLUME 3B
TRACK
TYPICAL SECTIONS

DISCIPLINE: TRACK

SHEET NAME: E2-TRK-TYP-009

SHEET 81 OF 420

Jan, 15 2016 11:49 am V:\3400_ADC\CAD\00_EAST\PLANSHEETS\TRACK\E2-TRK-TYP.dwg By: V-RasulL

NOTES:
1. SEE SYSTEM PLANS FOR DUCTBANK AND CABLE TROUGH DETAILS.
2. MnDOT BRIDGE 27C11. SEE STRUCTURAL PLANS.
3. MnDOT BRIDGE 27C12. SEE STRUCTURAL PLANS.
4. MnDOT BRIDGE 27C13. SEE STRUCTURAL PLANS.
5. FOR GUARD RAIL LIMITS SEE TRACK CHARTS.

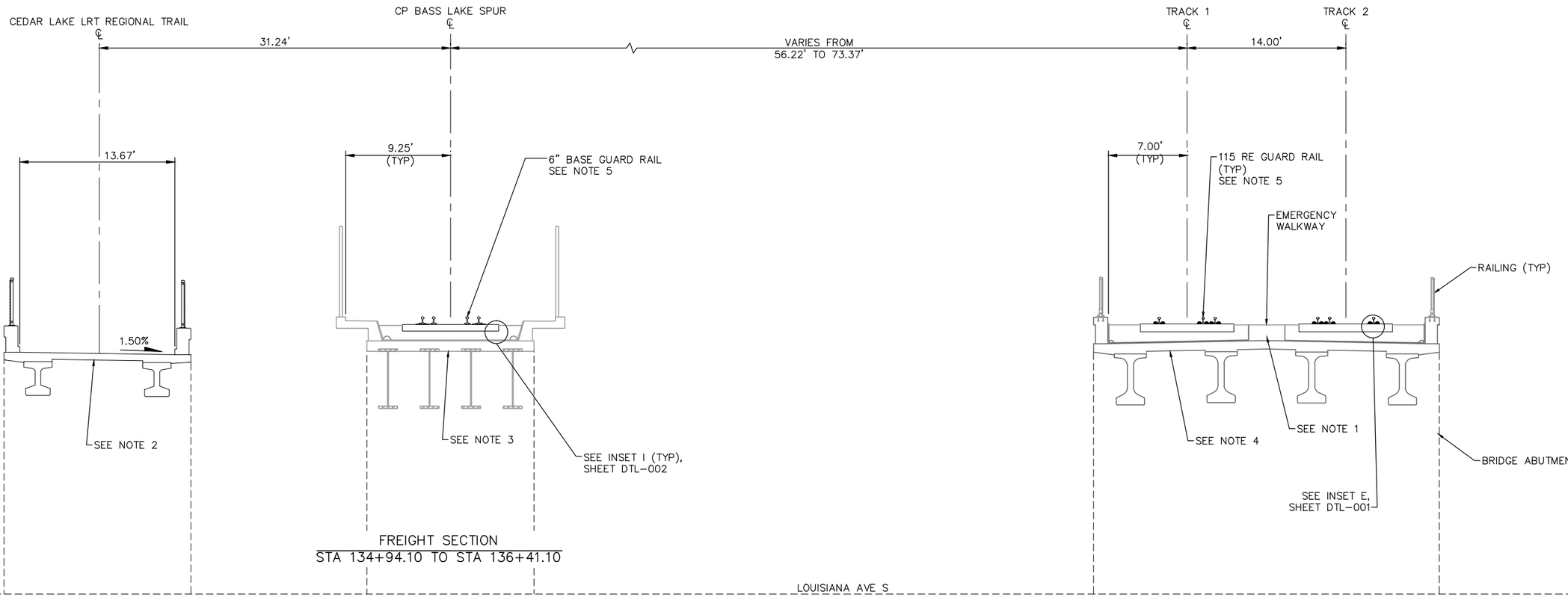

FREIGHT SECTION
STA 134+94.10 TO STA 136+41.10

TYPICAL SECTION
STA 2632+05.70 TO STA 2633+51.66

SCALE 0 2.5 5 10 IN FEET

NO.	DATE	BY	CHECK	DESIGN	REVISION / SUBMITTAL

AECOM

90% SUBMISSION - 01/22/16

METROPOLITAN COUNCIL

SOUTHWEST Green Line LRT Extension

CIVIL - VOLUME 3B
TRACK
TYPICAL SECTIONS

SHEET 82 OF 420

DISCIPLINE: TRACK

SHEET NAME: E2-TRK-TYP-010

Jan. 15 2016 11:50 am V:\3400_ADC\CAD\00_EAST\PLANSHEETS\TRACK\E2-TRK-TYP.dwg By: V-RasulL

NOTES:
1. SEE SYSTEM PLANS FOR DUCTBANK AND CABLE TROUGH DETAILS.
2. SEE RETAINING WALL PLANS FOR DETAILS.
3. SEE SOIL CORRECTION TABLE FOR DETAILS.
4. SEE RETAINING WALL PLANS FOR LOAD TRANSFER PLATFORM DETAILS.
5. FOR GUARD RAIL LIMITS SEE TRACK CHARTS.
6. SEE URBAN DESIGN PLANS FOR FENCE LOCATION AND DETAILS.
7. FOR DITCH INVERT AND DETAILS, SEE DRAINAGE PLANS.

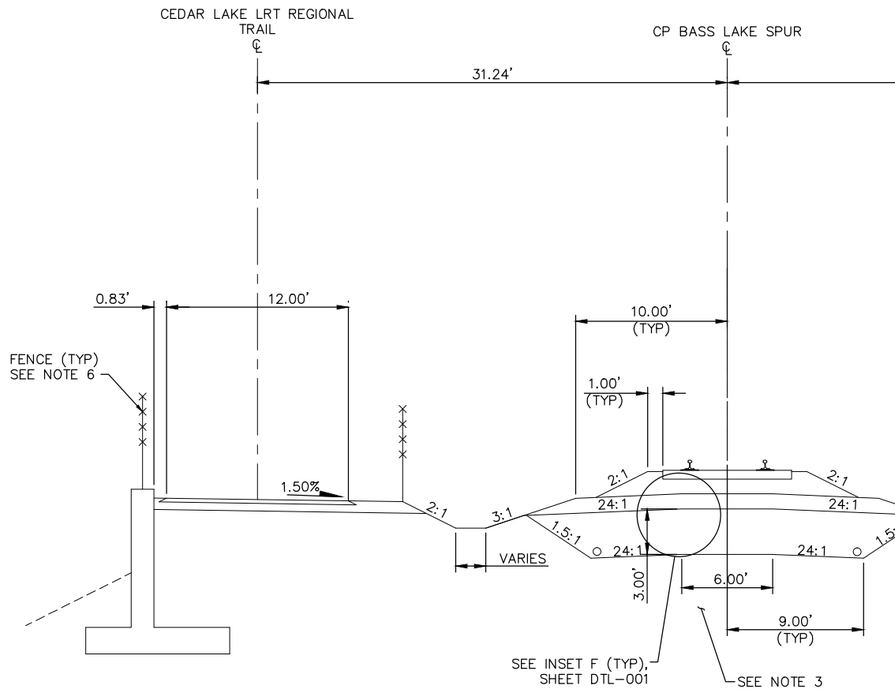

FREIGHT SECTION
STA 136+41.10 TO STA 136+71.80

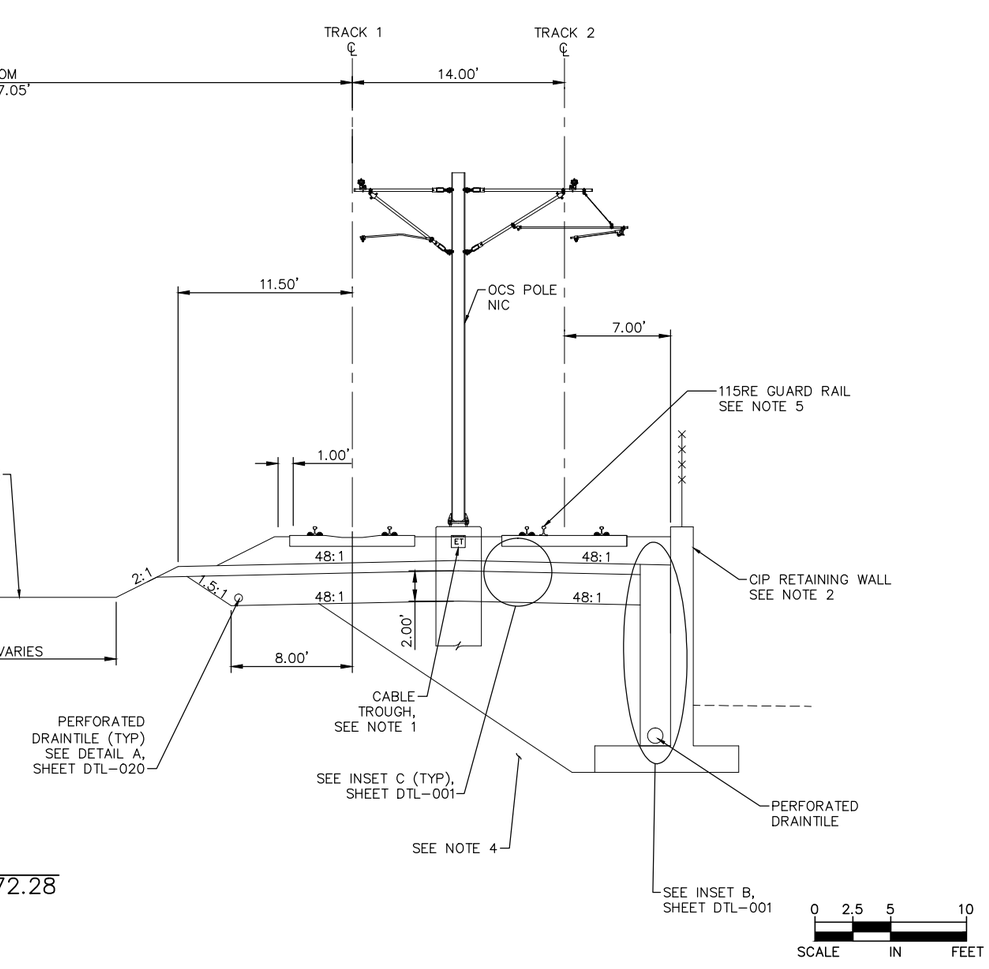

TYPICAL SECTION
STA 2633+51.66 TO STA 2633+72.28

NO.	DATE	BY	CHECK	DESIGN	REVISION / SUBMITTAL

AECOM

90% SUBMISSION - 01/22/16

METROPOLITAN COUNCIL

SOUTHWEST Green Line LRT Extension

CIVIL - VOLUME 3B
TRACK
TYPICAL SECTIONS

SHEET 83 OF 420

DISCIPLINE: TRACK

SHEET NAME: E2-TRK-TYP-011

Jan, 15 2016 11:50 am V:\3400_ADC\CAD\00_EAST\PLANSHEETS\TRACK\E2-TRK-TYP.dwg By: V-RasulL

NOTES:
1. TRACK CENTERS WIDEN FROM 14.00' TO 20.00' BETWEEN STA 2634+99.26 AND STA 2636+64.94.
2. SEE RETAINING WALL PLANS FOR DETAILS.
3. FOR GUARD RAIL LIMITS SEE TRACK CHARTS.
4. SEE RETAINING WALL PLANS FOR LOAD TRANSFER PLATFORM DETAILS.
5. SPECIAL TRACKWORK NOT ILLUSTRATED.
6. SEE SYSTEM PLANS FOR DUCTBANK AND CABLE TROUGH DETAILS.
7. SEE URBAN DESIGN PLANS FOR FENCE LOCATION AND DETAILS.
8. FOR DITCH INVERT AND DETAILS, SEE DRAINAGE PLANS.
9. SEE SOIL CORRECTION TABLE FOR DETAILS.

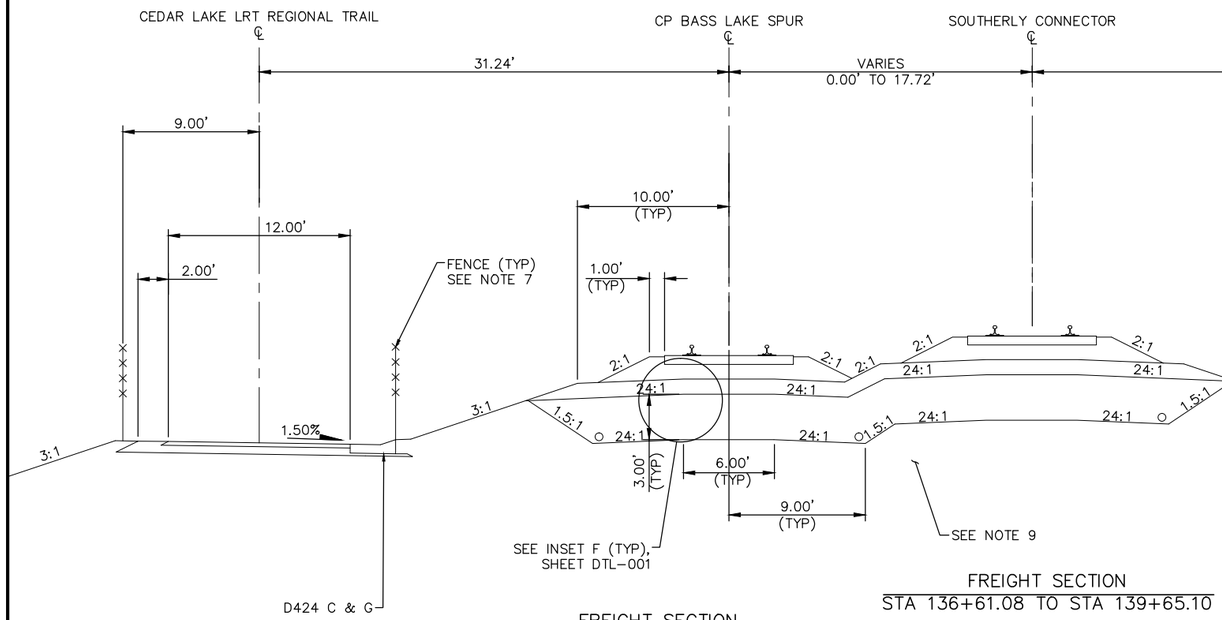

FREIGHT SECTION
STA 136+71.80 TO STA 139+66.69

FREIGHT SECTION
STA 136+61.08 TO STA 139+65.10

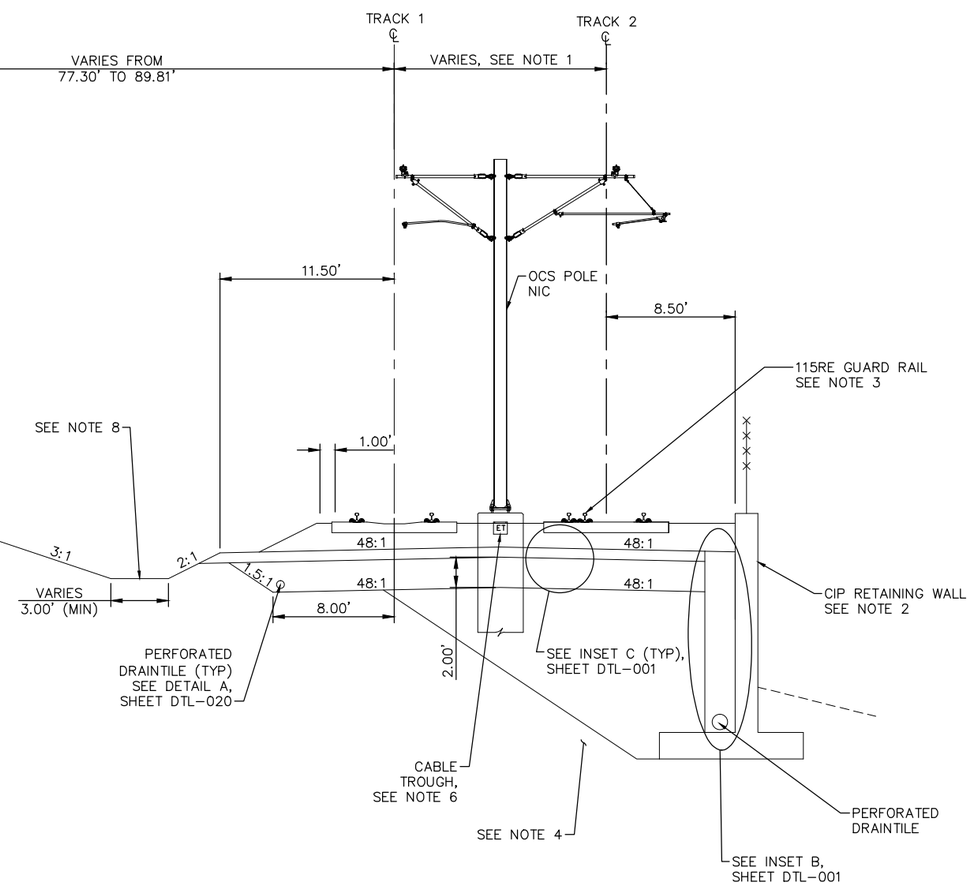

TYPICAL SECTION
STA 2633+72.28 TO STA 2636+64.94

0 2.5 5 10
SCALE IN FEET

NO.	DATE	BY	CHECK	DESIGN	REVISION / SUBMITTAL

AECOM

90% SUBMISSION - 01/22/16

METROPOLITAN COUNCIL

SOUTHWEST Green Line LRT Extension

CIVIL - VOLUME 3B
TRACK
TYPICAL SECTIONS

DISCIPLINE: TRACK

SHEET NAME: E2-TRK-TYP-012

SHEET 84 OF 420

Jan, 15 2016 11:50 am V:\3400_ADC\CAD\00_EAST\PLANSHEETS\TRACK\E2-TRK-TYP.dwg By: V-RasulL

NOTES:
1. TRACK CENTERS WIDEN FROM 20.00' TO 29.29' BETWEEN STA 2636+64.94 AND STA 2637+75.96.
2. SEE RETAINING WALL PLANS FOR DETAILS.
3. FOR GUARD RAIL LIMITS SEE TRACK CHARTS.
4. SEE RETAINING WALL PLANS FOR LOAD TRANSFER PLATFORM DETAILS.
5. SEE SYSTEM PLANS FOR DUCTBANK AND CABLE TROUGH DETAILS.
6. SEE URBAN DESIGN PLANS FOR FENCE LOCATION AND DETAILS.
7. FOR DITCH INVERT AND DETAILS, SEE DRAINAGE PLANS.
8. SEE SOIL CORRECTION TABLE FOR DETAILS.

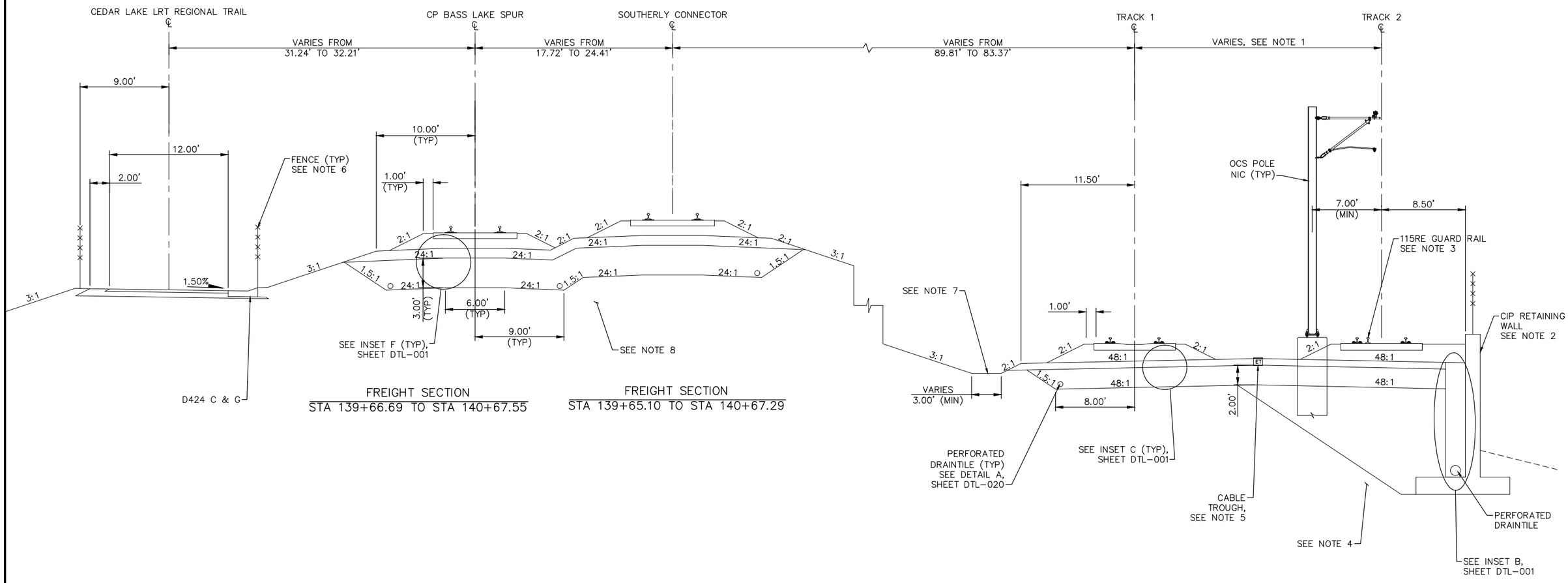

FREIGHT SECTION
STA 139+66.69 TO STA 140+67.55

FREIGHT SECTION
STA 139+65.10 TO STA 140+67.29

TYPICAL SECTION
STA 2636+64.94 TO STA 2637+75.96

SCALE 0 2.5 5 10 IN FEET

NO.	DATE	BY	CHECK	DESIGN	REVISION / SUBMITTAL

AECOM

90% SUBMISSION - 01/22/16

METROPOLITAN COUNCIL

SOUTHWEST Green Line LRT Extension

CIVIL - VOLUME 3B
TRACK
TYPICAL SECTIONS

SHEET 85 OF 420

DISCIPLINE: TRACK

SHEET NAME: E2-TRK-TYP-013

Jan, 15 2016 11:51 am V:\3400_ADC\CAD\00_EAST\PLANSHEETS\TRACK\E2-TRK-TYP.dwg By: V-RasulL

NOTES:
1. TRACK CENTERS WIDEN FROM 29.29' TO 30.27' BETWEEN STA 2637+75.96 AND STA 2638+16.65.
2. SEE RETAINING WALL PLANS FOR DETAILS.
3. FOR GUARD RAIL LIMITS SEE TRACK CHARTS.
4. SEE RETAINING WALL PLANS FOR LOAD TRANSFER PLATFORM DETAILS.
5. SEE SYSTEM PLANS FOR DUCTBANK AND CABLE TROUGH DETAILS.
6. SEE URBAN DESIGN PLANS FOR FENCE LOCATION AND DETAILS.
7. FOR DITCH INVERT AND DETAILS, SEE DRAINAGE PLANS.
8. SEE SOIL CORRECTION TABLE FOR DETAILS.

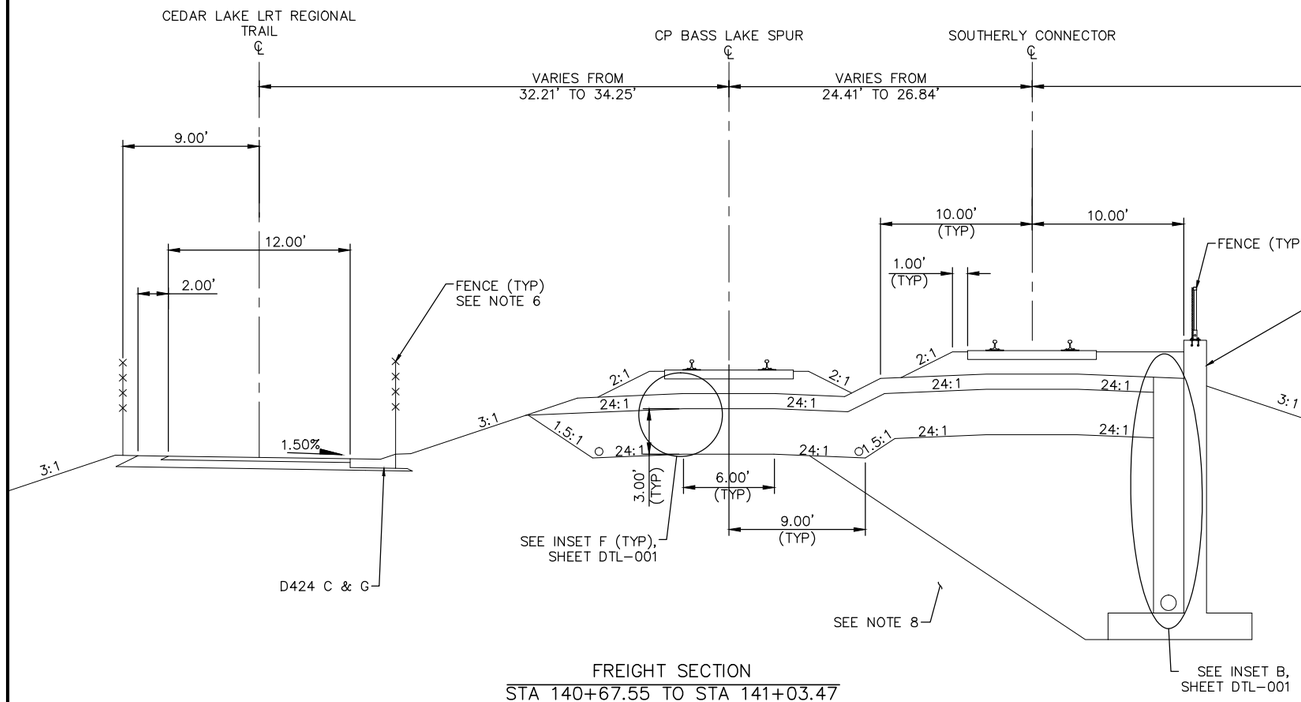

FREIGHT SECTION
STA 140+67.55 TO STA 141+03.47

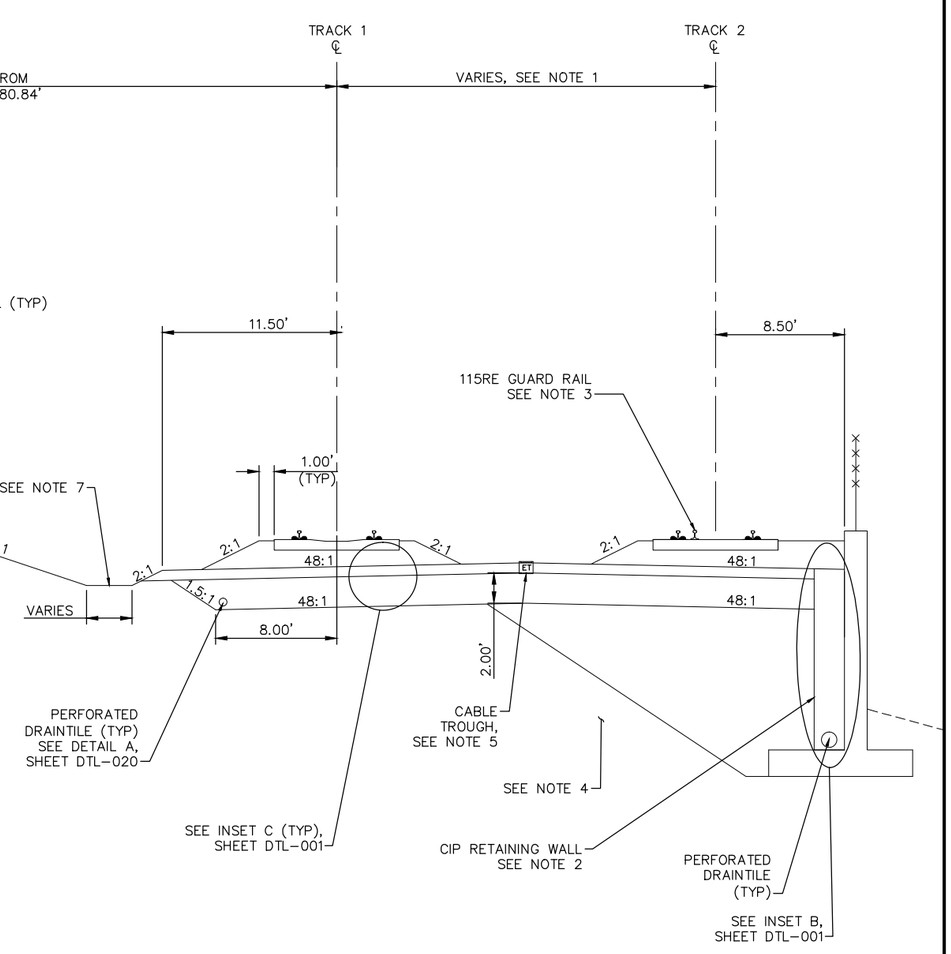

FREIGHT SECTION
STA 140+67.29 TO STA 141+04.12

TYPICAL SECTION
STA 2637+75.96 TO STA 2638+16.65

SCALE 0 2.5 5 10 IN FEET

NO.	DATE	BY	CHECK	DESIGN	REVISION / SUBMITTAL

AECOM

90% SUBMISSION - 01/22/16

METROPOLITAN COUNCIL

SOUTHWEST Green Line LRT Extension

CIVIL - VOLUME 3B
TRACK
TYPICAL SECTIONS

SHEET 86 OF 420

DISCIPLINE: TRACK

SHEET NAME: E2-TRK-TYP-014

Jan, 15 2016 11:51 am V:\3400_ADC\CAD\00_EAST\PLANSHEETS\TRACK\E2-TRK-TYP.dwg By: V-RasulL

NOTES:
1. TRACK CENTERS WIDEN FROM 30.27' TO 30.38' BETWEEN STA 2638+16.65 AND STA 2638+49.95.
2. SEE RETAINING WALL PLANS FOR DETAILS.
3. SEE SYSTEM PLANS FOR DUCTBANK AND CABLE TROUGH DETAILS.
4. SEE URBAN DESIGN PLANS FOR FENCE LOCATION AND DETAILS.
5. FOR DITCH INVERT AND DETAILS, SEE DRAINAGE PLANS.
6. SEE SOIL CORRECTION TABLE FOR DETAILS.
7. SELECT GRANULAR DEPTH: STA 2638+16.69 TO STA 2638+47.00: 1.00'; STA 2638+94.35: 3.33'. TRANSITION LINEARLY BETWEEN STA 2638+47.00 AND STA 2638+94.35.
8. TRANSITION FROM 7.00' TO 9.50' BETWEEN STA 2638+47.00 AND STA 2638+94.35.

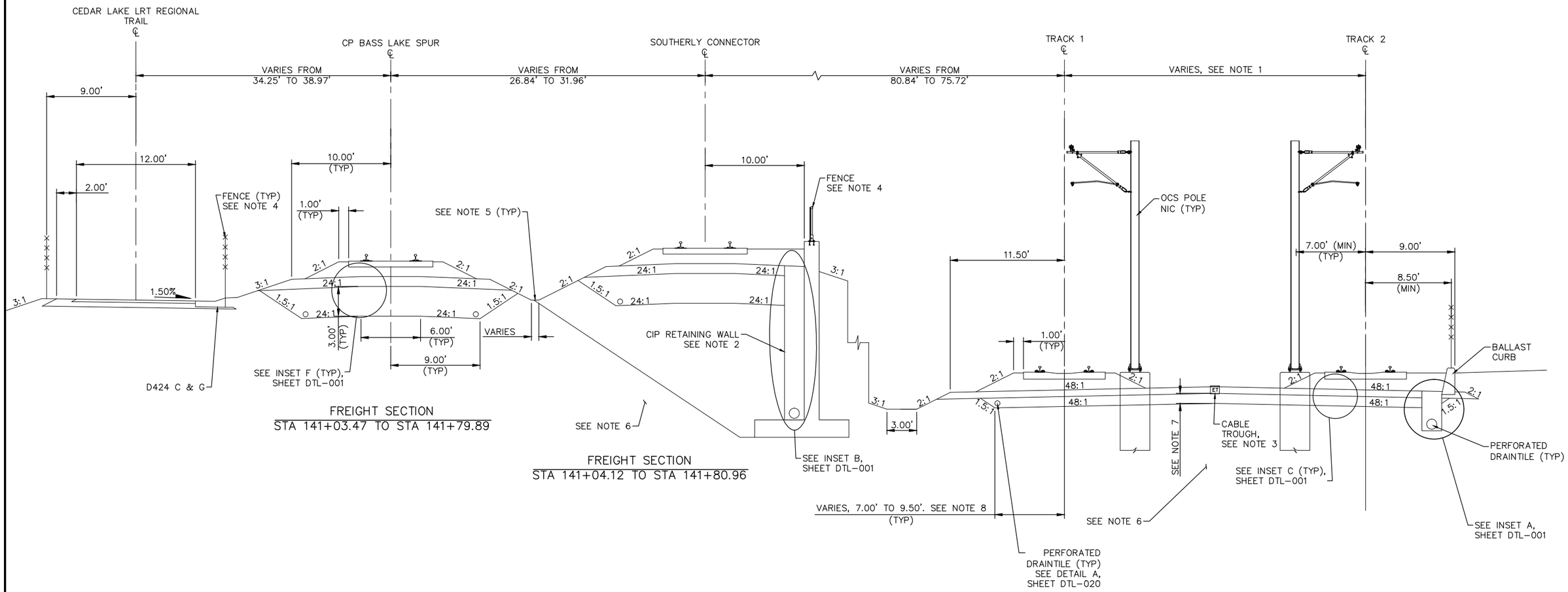

FREIGHT SECTION
STA 141+03.47 TO STA 141+79.89

FREIGHT SECTION
STA 141+04.12 TO STA 141+80.96

TYPICAL SECTION
STA 2638+16.65 TO STA 2638+94.35

SCALE 0 2.5 5 10 IN FEET

NO.	DATE	BY	CHECK	DESIGN	REVISION / SUBMITTAL

AECOM

90% SUBMISSION - 01/22/16

METROPOLITAN COUNCIL

SOUTHWEST Green Line LRT Extension

CIVIL - VOLUME 3B
TRACK
TYPICAL SECTIONS

SHEET 87 OF 420

DISCIPLINE: TRACK

SHEET NAME: E2-TRK-TYP-015

Jan, 15 2016 11:51 am V:\3400_ADC\CAD\00_EAST\PLANSHEETS\TRACK\E2-TRK-TYP.dwg By: V-RasulL

NOTES:
1. SEE STATION PLANS FOR STATION PLATFORM DETAILS.
2. SEE RETAINING WALL PLANS FOR DETAILS.
3. SEE RETAINING WALL PLANS FOR LOAD TRANSFER PLATFORM (LTP) DETAILS. LTP BEGINS AT STA 2639+00.95 (FRT STA 144+00.00).
4. SEE SYSTEM PLANS FOR DUCTBANK AND CABLE TROUGH DETAILS.
5. SEE URBAN DESIGN PLANS FOR FENCE LOCATION AND DETAILS.
6. FOR DITCH INVERT AND DETAILS, SEE DRAINAGE PLANS.
7. SEE SOIL CORRECTION TABLE FOR DETAILS.

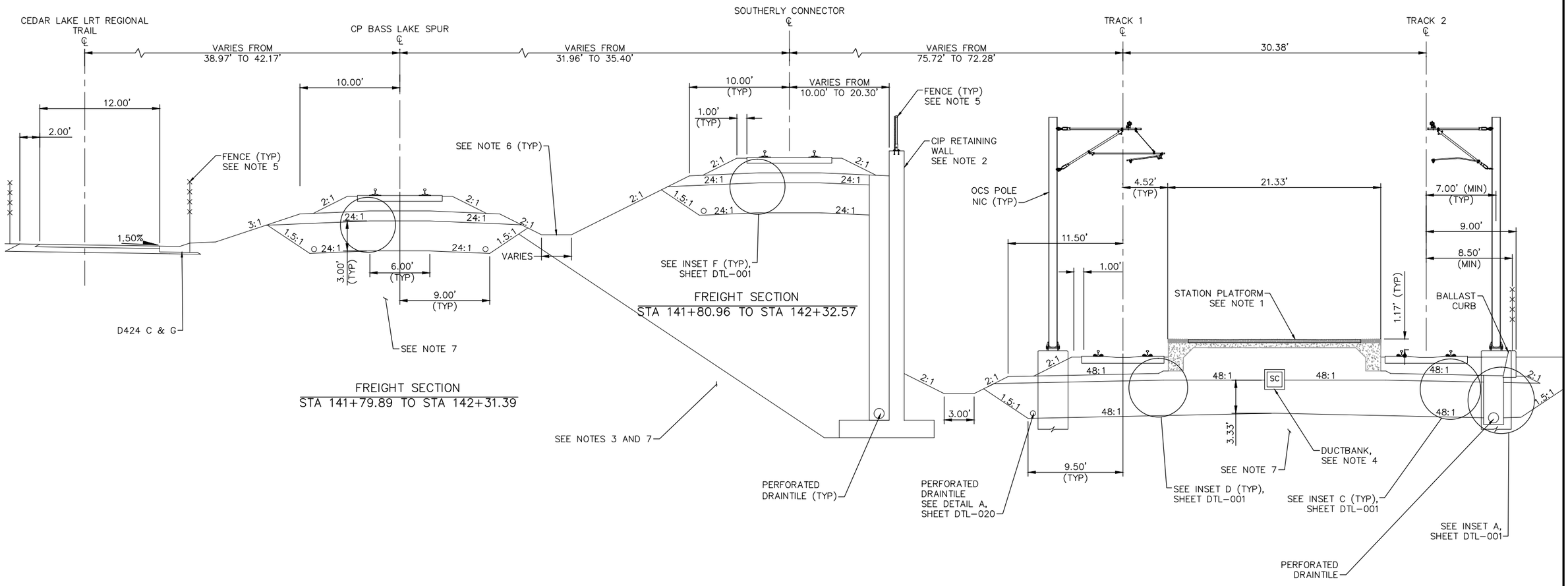

TYPICAL SECTION – LOUISIANA STATION
STA 2638+94.35 TO STA 2639+45.84

SCALE 0 2.5 5 10 IN FEET

NO.	DATE	BY	CHECK	DESIGN	REVISION / SUBMITTAL

AECOM

90% SUBMISSION - 01/22/16

METROPOLITAN COUNCIL

SOUTHWEST Green Line LRT Extension

CIVIL - VOLUME 3B
TRACK
TYPICAL SECTIONS

DISCIPLINE: TRACK

SHEET NAME: E2-TRK-TYP-016

SHEET 88 OF 420

Jan, 15 2016 11:51 am V:\3400_ADC\CAD\00_EAST\PLANSHEETS\TRACK\E2-TRK-TYP.dwg By: V-RasulL

NOTES:
1. SEE STATION PLANS FOR STATION PLATFORM DETAILS.
2. SEE RETAINING WALL PLANS FOR DETAILS.
3. SEE RETAINING WALL PLANS FOR LOAD TRANSFER PLATFORM DETAILS.
4. SEE SYSTEM PLANS FOR DUCTBANK AND CABLE TROUGH DETAILS.
5. LOUISIANA STATION PLATFORM ENDS AT 2641+64.35.
6. SEE URBAN DESIGN PLANS FOR FENCE LOCATION AND DETAILS.
7. FOR DITCH INVERT AND DETAILS, SEE DRAINAGE PLANS.
8. SEE SOIL CORRECTION TABLE FOR DETAILS.

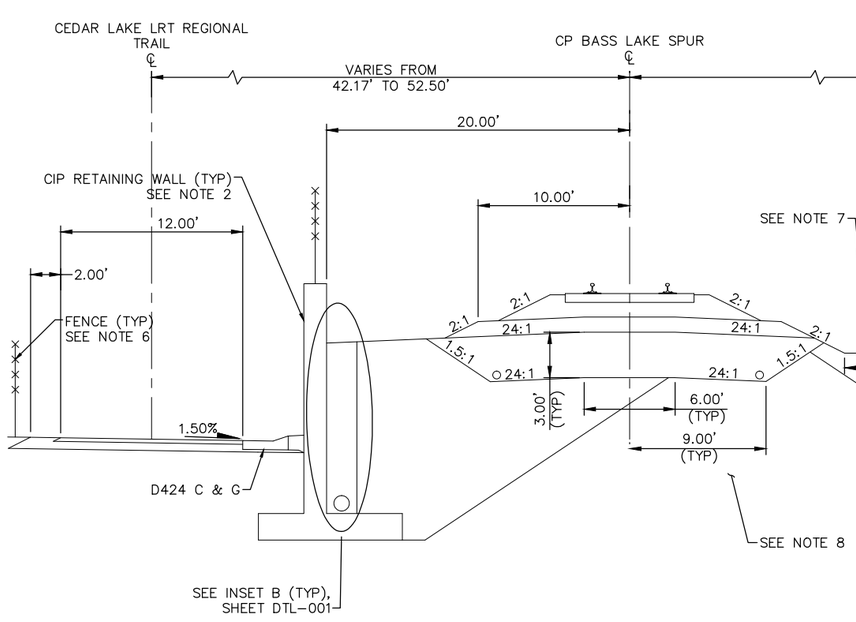

FREIGHT SECTION
STA 142+31.39 TO STA 144+44.89

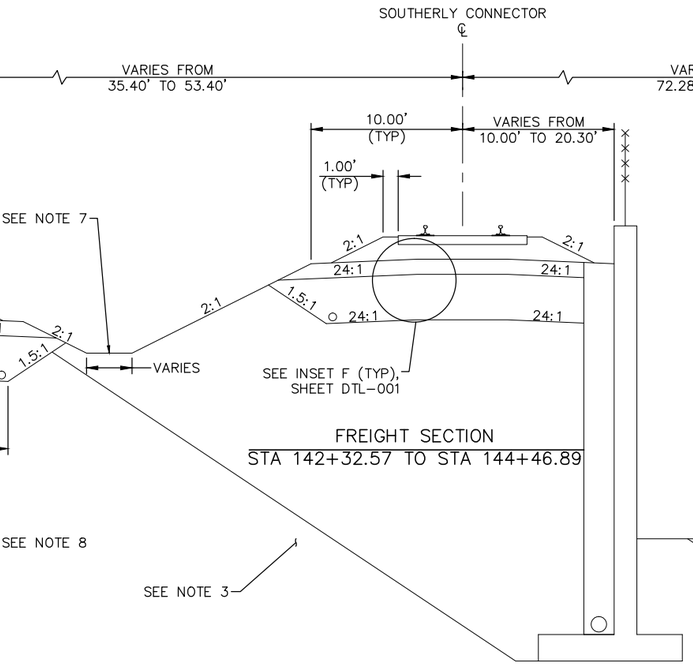

FREIGHT SECTION
STA 142+32.57 TO STA 144+46.89

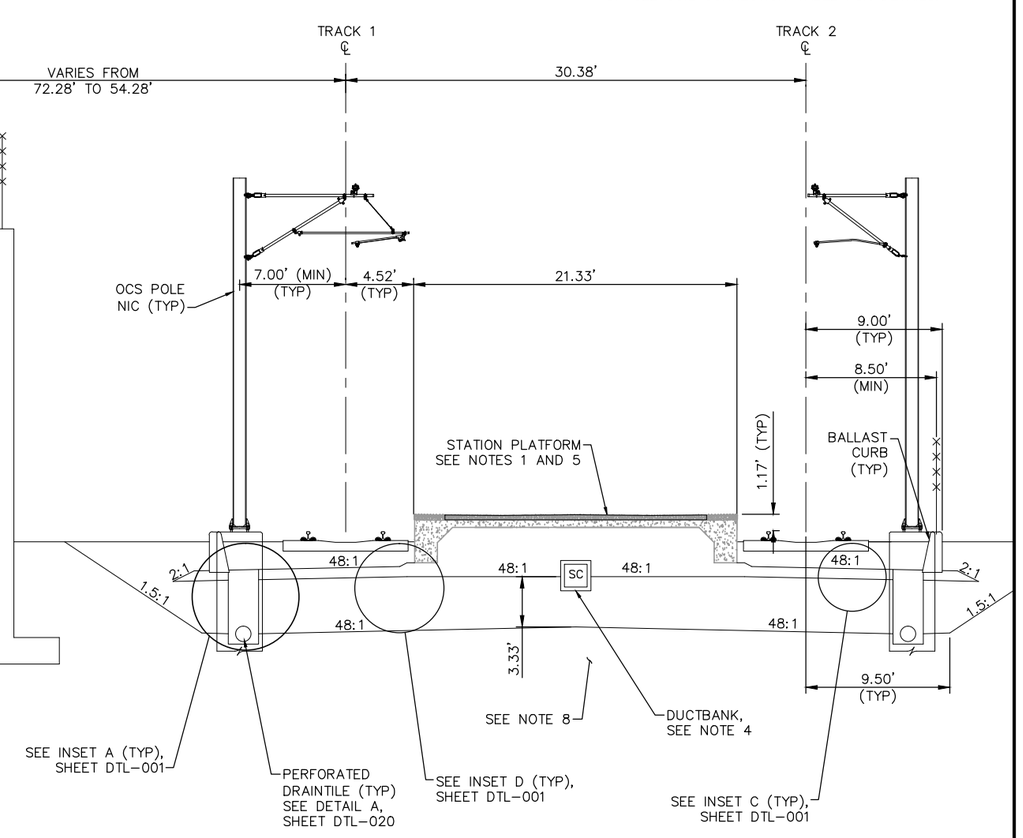

TYPICAL SECTION – LOUISIANA STATION
STA 2639+45.84 TO STA 2641+59.35

SCALE 0 2.5 5 10 IN FEET

NO.	DATE	BY	CHECK	DESIGN	REVISION / SUBMITTAL

AECOM

90% SUBMISSION - 01/22/16

METROPOLITAN COUNCIL

SOUTHWEST Green Line LRT Extension

CIVIL - VOLUME 3B
TRACK
TYPICAL SECTIONS

DISCIPLINE: TRACK

SHEET NAME: E2-TRK-TYP-017

SHEET 89 OF 420

Jan, 15 2016 11:52 am V:\3400_ADC\CAD\00_EAST\PLANSHEETS\TRACK\E2-TRK-TYP.dwg By: V-RasulL

NOTES:
1. MnDOT BRIDGE R0690. SEE STRUCTURAL PLANS FOR LOUISIANA UNDERPASS FOR DETAILS.
2. SEE SYSTEM PLANS FOR DUCTBANK AND CABLE TROUGH DETAILS.
3. SEE URBAN DESIGN PLANS FOR FENCE LOCATION AND DETAILS.
4. FOR DITCH INVERT AND DETAILS, SEE DRAINAGE PLANS.
5. LOUISIANA STATION PLATFORM ENDS AT 2641+64.35.
6. SEE SOIL CORRECTION TABLE FOR DETAILS.
7. SELECT GRANULAR DEPTH: STA 2641+59.35: 3.33'; STA 2642+06.00: 1.00'. TRANSITION LINEARLY BETWEEN STA 2641+59.35 AND STA 2642+06.00.
8. TRANSITION FROM 9.50' TO 7.00' BETWEEN STA 2641+59.35 AND STA 2642+06.00.

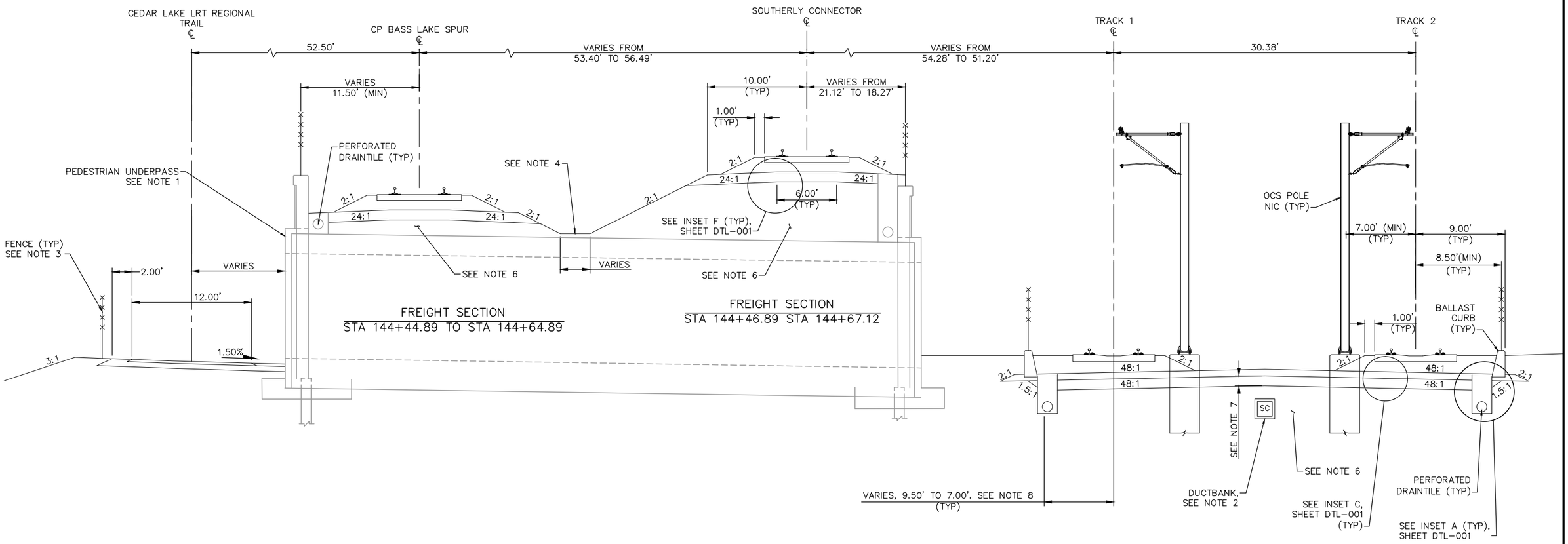

TYPICAL SECTION
STA 2641+59.35 TO STA 2641+79.35

SCALE 0 2.5 5 10 IN FEET

NO.	DATE	BY	CHECK	DESIGN	REVISION / SUBMITTAL

AECOM

90% SUBMISSION - 01/22/16

METROPOLITAN COUNCIL

SOUTHWEST Green Line LRT Extension

CIVIL - VOLUME 3B
TRACK
TYPICAL SECTIONS

DISCIPLINE: TRACK

SHEET NAME: E2-TRK-TYP-018

SHEET 90 OF 420

Jan, 15 2016 11:52 am V:\3400_ADC\CAD\00_EAST\PLANSHEETS\TRACK\E2-TRK-TYP.dwg By: V-RasulL

NOTES:
1. TRACK CENTERS WIDEN FROM 30.38' TO 30.96' BETWEEN STA 2641+79.35 AND STA 2643+23.99.
2. SEE RETAINING WALL PLANS FOR DETAILS.
3. SEE SYSTEM PLANS FOR DUCTBANK AND CABLE TROUGH DETAILS.
4. SEE SHEET E2-TRK-TYP-053 THRU E2-TRK-TYP-057 FOR SOUTHERLY CONNECTOR TYPICAL SECTIONS.
5. SEE URBAN DESIGN PLANS FOR FENCE LOCATION AND DETAILS.
6. FOR DITCH INVERT AND DETAILS, SEE DRAINAGE PLANS.
7. SEE SOIL CORRECTION TABLE FOR DETAILS.
8. SEE RETAINING WALL PLANS FOR LOAD TRANSFER PLATFORM DETAILS.
9. SELECT GRANULAR DEPTH: STA 2641+59.35: 3.33'; STA 2642+06.00: 1.00'. TRANSITION LINEARLY BETWEEN STA 2641+59.35 AND STA 2642+06.00.
10. TRANSITION FROM 9.50' TO 7.00' BETWEEN STA 2641+59.35 AND STA 2642+06.00.

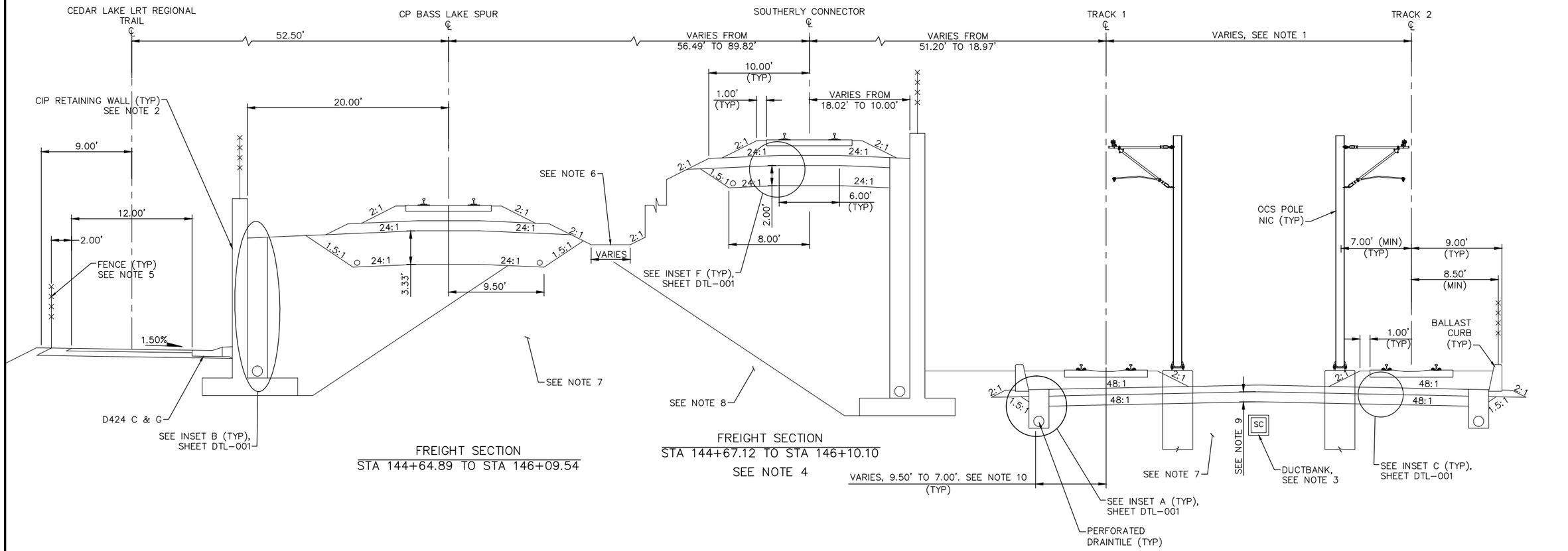

FREIGHT SECTION
STA 144+64.89 TO STA 146+09.54

FREIGHT SECTION
STA 144+67.12 TO STA 146+10.10
SEE NOTE 4

TYPICAL SECTION
STA 2641+79.35 TO STA 2643+23.99

SCALE 0 2.5 5 10 IN FEET

NO.	DATE	BY	CHECK	DESIGN	REVISION / SUBMITTAL

AECOM

90% SUBMISSION - 01/22/16

METROPOLITAN COUNCIL

SOUTHWEST Green Line LRT Extension

CIVIL - VOLUME 3B
TRACK
TYPICAL SECTIONS

DISCIPLINE: TRACK

SHEET NAME: E2-TRK-TYP-019

SHEET 91 OF 420

Jan, 15 2016 11:52 am V:\3400_ADC\CAD\00_EAST\PLANSHEETS\TRACK\E2-TRK-TYP.dwg By: V-RasulL

NOTES:
1. TRACK CENTERS WIDEN FROM 30.96' TO 40.59' BETWEEN STA 2643+23.99 AND STA 2645+19.82.
2. MnDOT BRIDGE R0691. SEE STRUCTURAL PLANS.
3. SEE SYSTEM PLANS FOR DUCTBANK AND CABLE TROUGH DETAILS.
4. SEE SOIL CORRECTION TABLE FOR DETAILS.
5. SEE RETAINING WALL PLANS FOR DETAILS.
6. CIP WALL ENDS AT STA 2643+92.84.
7. FOR DITCH INVERT AND DETAILS, SEE DRAINAGE PLANS.
8. SEE URBAN DESIGN PLANS FOR FENCE LOCATION AND DETAILS.

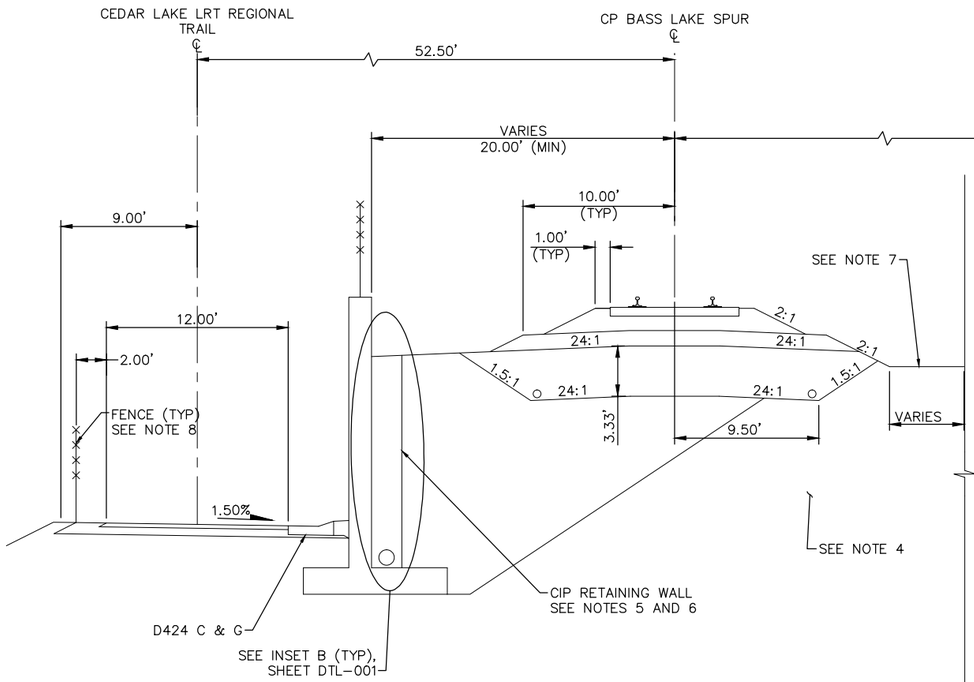

FREIGHT SECTION
STA 146+09.54 TO STA 148+00.22

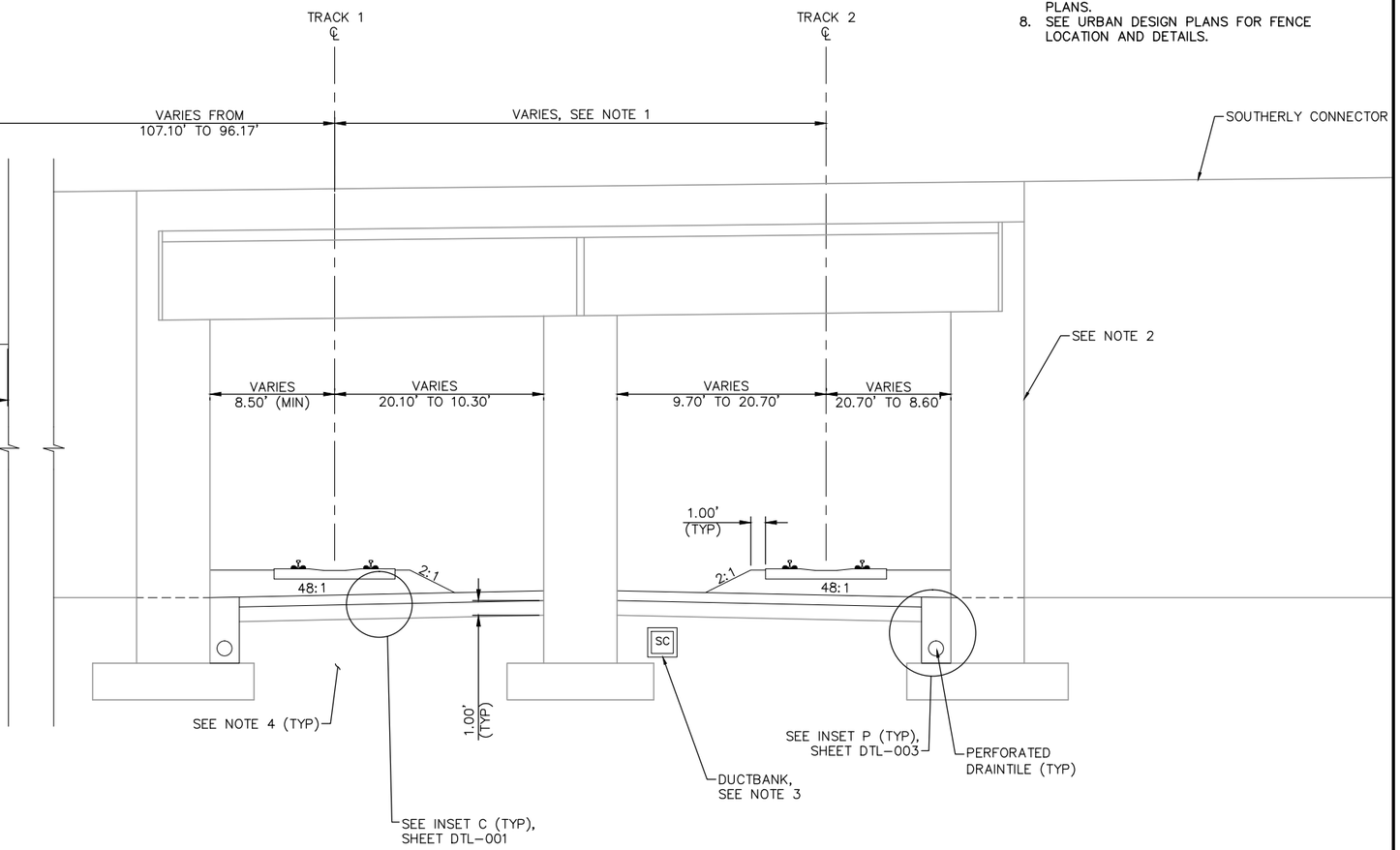

TYPICAL SECTION
STA 2643+23.99 TO STA 2645+19.82

0 2.5 5 10
SCALE IN FEET

NO.	DATE	BY	CHECK	DESIGN	REVISION / SUBMITTAL

AECOM

90% SUBMISSION - 01/22/16

METROPOLITAN COUNCIL

SOUTHWEST Green Line LRT Extension

CIVIL - VOLUME 3B
TRACK
TYPICAL SECTIONS

SHEET 92 OF 420

DISCIPLINE: TRACK

SHEET NAME: E2-TRK-TYP-020

Jan, 15 2016 11:53 am V:\3400_ADC\CAD\00_EAST\PLANSHEETS\TRACK\E2-TRK-TYP.dwg By: V-RosulL

NOTES:
1. TRACK CENTERS NARROW FROM 40.59' TO 33.74' BETWEEN STA 2645+19.82 AND STA 2648+00.00.
2. SEE SOIL CORRECTION TABLE FOR DETAILS.
3. SEE SYSTEM PLANS FOR DUCTBANK AND CABLE TROUGH DETAILS.
4. SEE URBAN DESIGN PLANS FOR FENCE LOCATION AND DETAILS.
5. FOR DITCH INVERT AND DETAILS, SEE DRAINAGE PLANS.

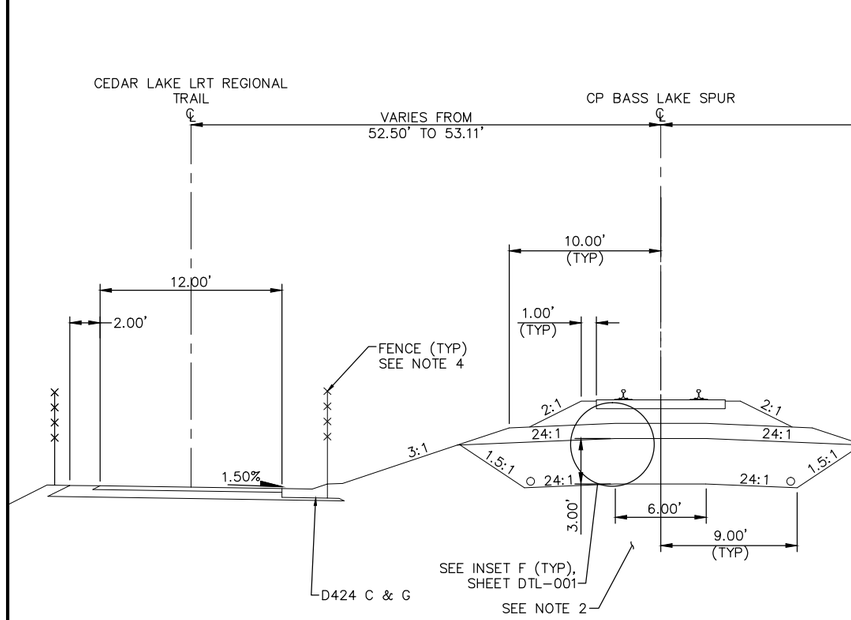

FREIGHT SECTION
STA 148+00.22 TO STA 150+67.41

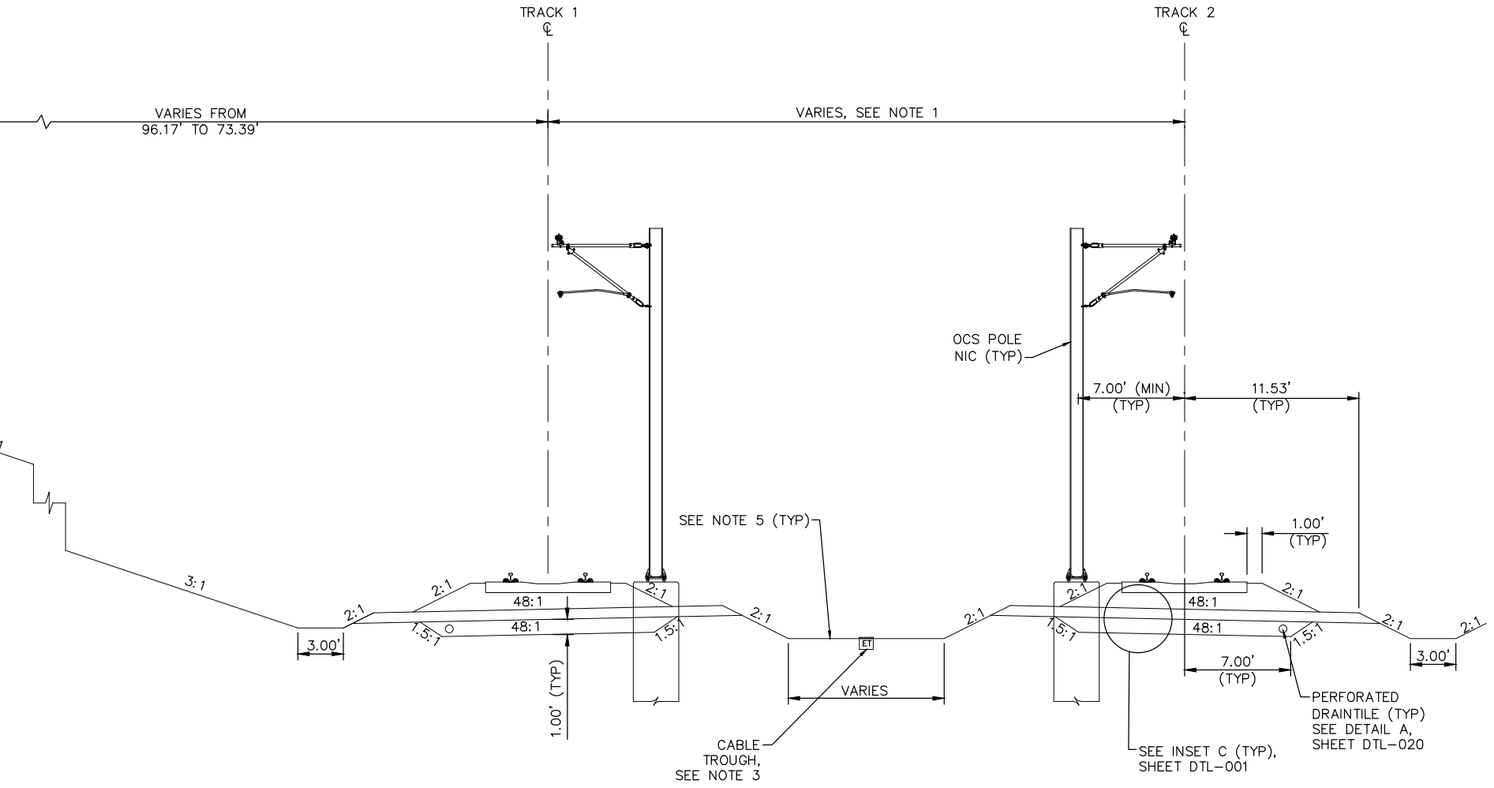

TYPICAL SECTION
STA 2645+19.82 TO STA 2648+00.00

SCALE 0 2.5 5 10 IN FEET

NO.	DATE	BY	CHECK	DESIGN	REVISION / SUBMITTAL

AECOM

90% SUBMISSION - 01/22/16

METROPOLITAN COUNCIL

SOUTHWEST Green Line LRT Extension

CIVIL - VOLUME 3B
TRACK
TYPICAL SECTIONS

SHEET 93 OF 420

DISCIPLINE: TRACK

SHEET NAME: E2-TRK-TYP-021

Jan, 15 2016 11:53 am V:\3400_ADC\CAD\00_EAST\PLANSHEETS\TRACK\E2-TRK-TYP.dwg By: V-RasulL

NOTES:
1. TRACK CENTERS NARROW FROM 33.74' TO 21.30' BETWEEN STA 2648+00.00 AND STA 2650+00.00.
2. SEE SYSTEM PLANS FOR DUCTBANK AND CABLE TROUGH DETAILS.
3. SEE URBAN DESIGN PLANS FOR FENCE LOCATION AND DETAILS.
4. FOR DITCH INVERT AND DETAILS, SEE DRAINAGE PLANS.
5. SELECT GRANULAR DEPTH: STA 2648+00.00: 3.00'; STA 2648+40.00 TO STA 2650+30.77: 1.00'. TRANSITION LINEARLY BETWEEN STA 2648+00.00 AND STA 2648+40.00.
6. TRANSITION FROM 9.00' TO 7.00' BETWEEN STA 2648+00.00 AND STA 2648+40.00.

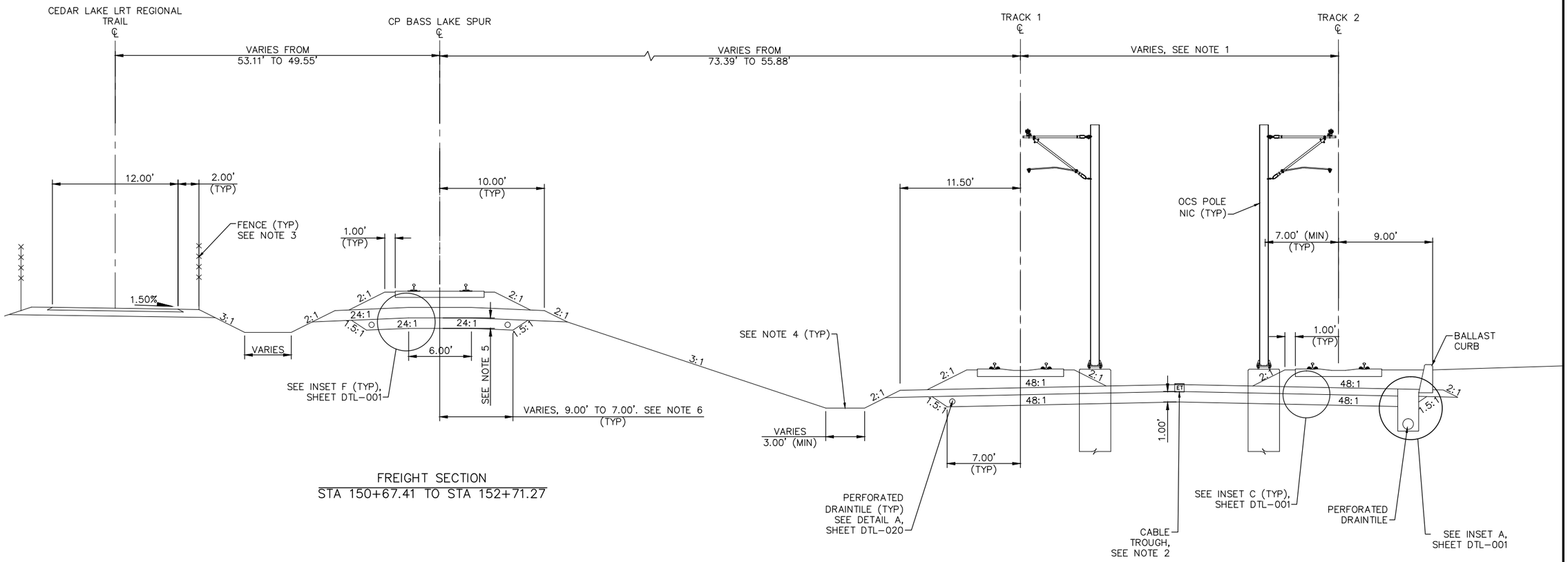

FREIGHT SECTION
STA 150+67.41 TO STA 152+71.27

TYPICAL SECTION
STA 2648+00.00 TO STA 2650+00.00

SCALE 0 2.5 5 10 IN FEET

NO.	DATE	BY	CHECK	DESIGN	REVISION / SUBMITTAL

AECOM

90% SUBMISSION - 01/22/16

METROPOLITAN COUNCIL

SOUTHWEST Green Line LRT Extension

CIVIL - VOLUME 3B
TRACK
TYPICAL SECTIONS

DISCIPLINE: TRACK

SHEET NAME: E2-TRK-TYP-022

SHEET 94 OF 420

Jan, 15 2016 11:53 am V:\3400_ADC\CAD\00_EAST\PLANSHEETS\TRACK\E2-TRK-TYP.dwg By: V-RasulL

NOTES:
1. TRACK CENTERS NARROW FROM 21.30' TO 19.37' BETWEEN STA 2650+00.00 AND STA 2650+51.58.
2. SEE URBAN DESIGN PLANS FOR FENCE LOCATION AND DETAILS.
3. FOR DITCH INVERT AND DETAILS, SEE DRAINAGE PLANS.
4. SEE SYSTEM PLANS FOR DUCTBANK AND CABLE TROUGH DETAILS.
5. SEE RETAINING WALL PLANS FOR DETAILS.

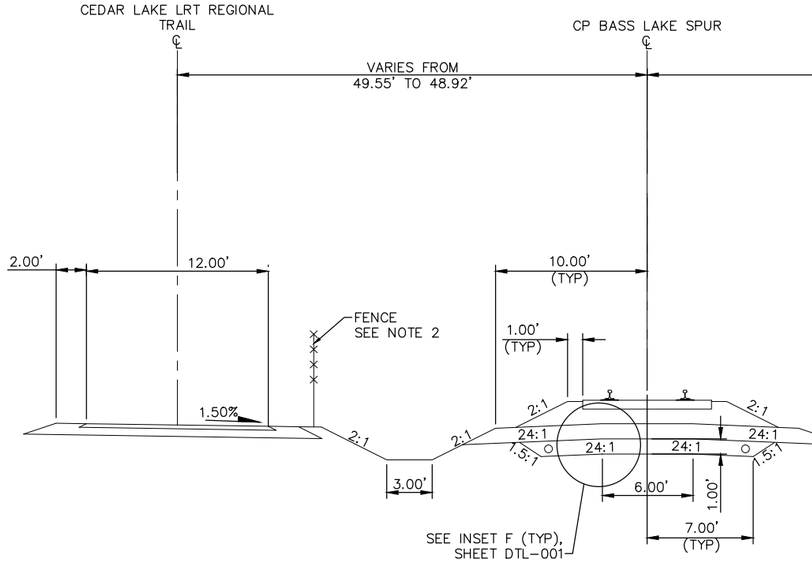

FREIGHT SECTION
STA 152+71.27 TO STA 153+34.76

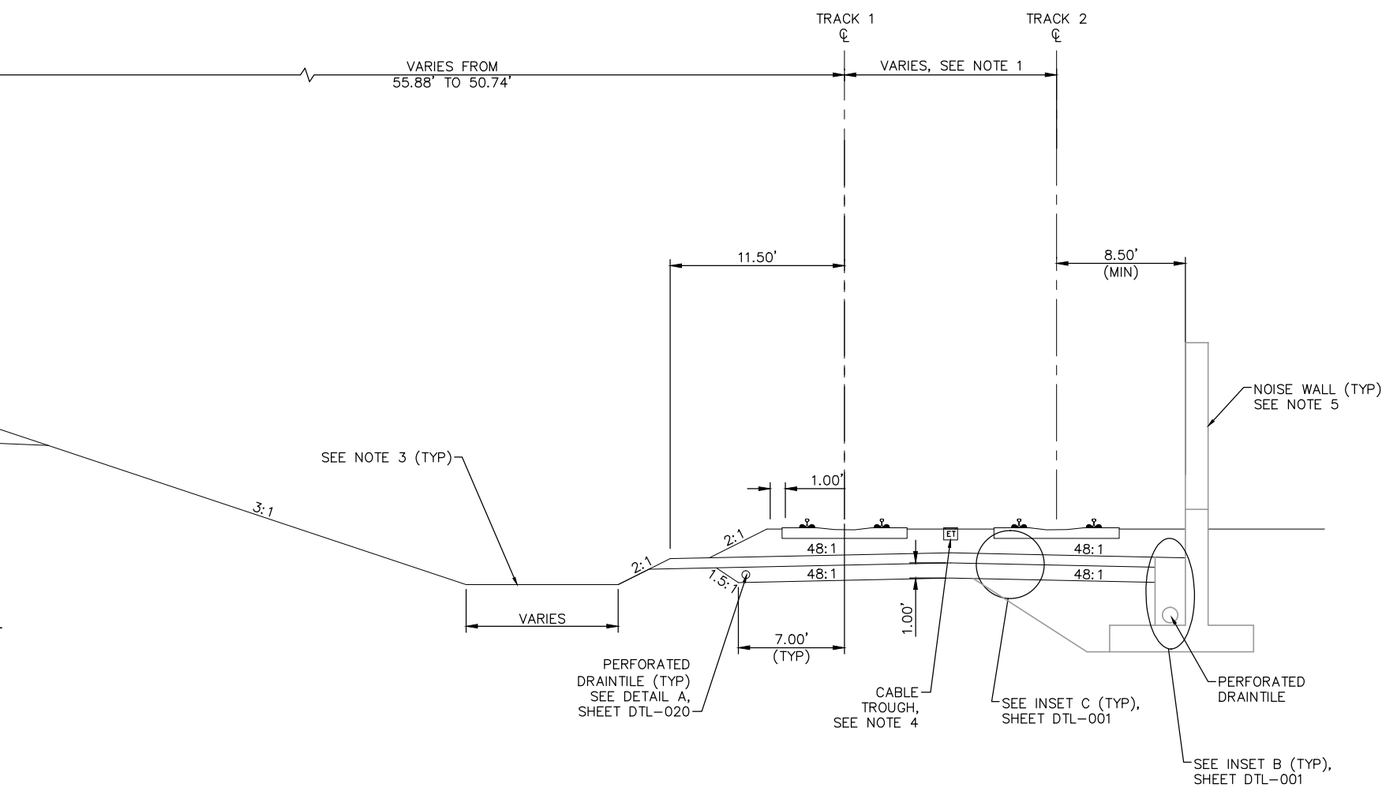

TYPICAL SECTION
STA 2650+00.00 TO STA 2650+51.58

0 2.5 5 10
SCALE IN FEET

NO.	DATE	BY	CHECK	DESIGN	REVISION / SUBMITTAL

AECOM

90% SUBMISSION - 01/22/16

METROPOLITAN COUNCIL

SOUTHWEST Green Line LRT Extension

CIVIL - VOLUME 3B
TRACK
TYPICAL SECTIONS

SHEET 95 OF 420

DISCIPLINE: TRACK

SHEET NAME: E2-TRK-TYP-023

Jan, 15 2016 11:54 am V:\3400_ADC\CAD\00_EAST\PLANSHEETS\TRACK\E2-TRK-TYP.dwg By: V-RasulL

NOTES:
1. TRACK CENTERS NARROW FROM 19.37' TO 18.80' BETWEEN STA 2650+51.58 AND STA 2650+70.39.
2. SEE SYSTEM PLANS FOR INTRUSION DETECTION DETAILS.
3. FOR DITCH INVERT AND DETAILS, SEE DRAINAGE PLANS.
4. SEE SYSTEM PLANS FOR DUCTBANK AND CABLE TROUGH DETAILS.
5. SEE STRUCTURAL PLANS FOR PROPOSED PIER PROTECTION DETAILS.
6. SEE URBAN DESIGN PLANS FOR FENCE LOCATION AND DETAILS.
7. SEE RETAINING WALL PLANS FOR DETAILS.

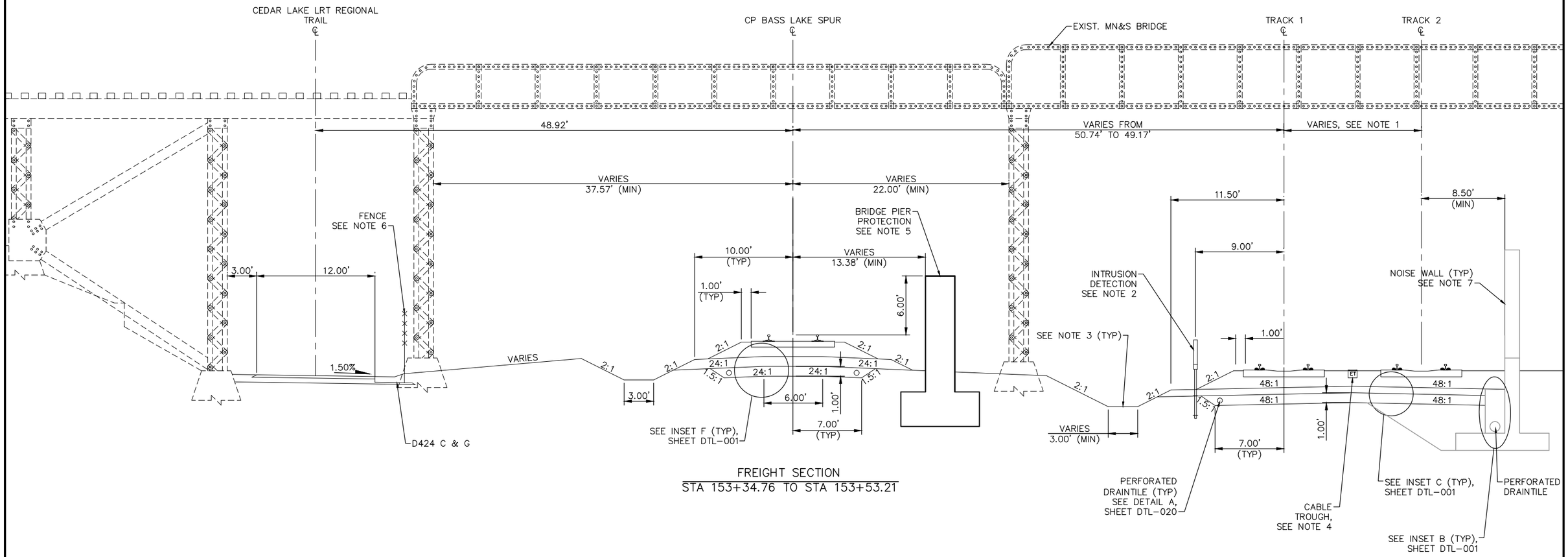

FREIGHT SECTION
STA 153+34.76 TO STA 153+53.21

TYPICAL SECTION
STA 2650+51.58 TO STA 2650+70.39

SCALE 0 2.5 5 10 IN FEET

NO.	DATE	BY	CHECK	DESIGN	REVISION / SUBMITTAL

AECOM

90% SUBMISSION - 01/22/16

METROPOLITAN COUNCIL

SOUTHWEST Green Line LRT Extension

CIVIL - VOLUME 3B
TRACK
TYPICAL SECTIONS

DISCIPLINE: TRACK

SHEET NAME: E2-TRK-TYP-024

SHEET 96 OF 420

Jan, 15 2016 11:54 am V:\3400_ADC\CAD\00_EAST\PLANSHEETS\TRACK\E2-TRK-TYP.dwg By: V-RasulL

NOTES:
1. TRACK CENTERS NARROW FROM 18.80' TO 16.62' BETWEEN STA 2650+70.39 AND STA 2651+70.00.
2. SEE SYSTEM PLANS FOR INTRUSION DETECTION DETAILS.
3. FOR DITCH INVERT AND DETAILS, SEE DRAINAGE PLANS.
4. SEE SYSTEM PLANS FOR DUCTBANK AND CABLE TROUGH DETAILS.
5. SEE URBAN DESIGN PLANS FOR FENCE LOCATION AND DETAILS.
6. SEE RETAINING WALL PLANS FOR DETAILS.

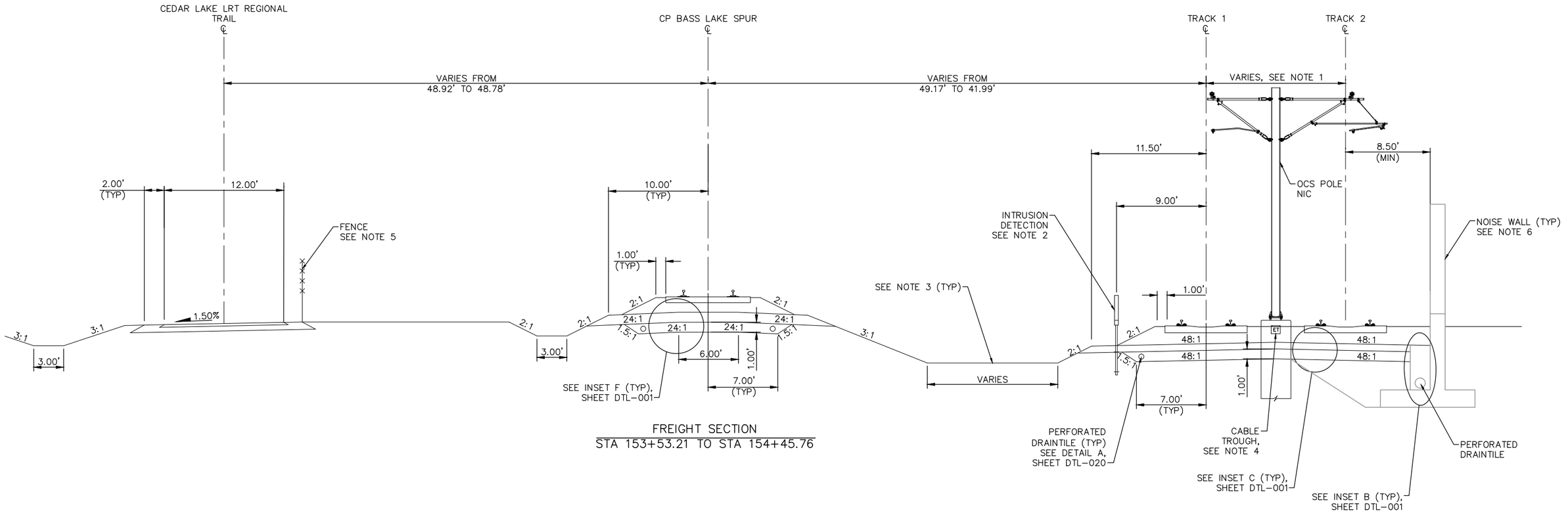

FREIGHT SECTION
STA 153+53.21 TO STA 154+45.76

TYPICAL SECTION
STA 2650+70.39 TO STA 2651+70.00

SCALE 0 2.5 5 10 IN FEET

NO.	DATE	BY	CHECK	DESIGN	REVISION / SUBMITTAL

AECOM

90% SUBMISSION - 01/22/16

METROPOLITAN COUNCIL

SOUTHWEST Green Line LRT Extension

CIVIL - VOLUME 3B
TRACK
TYPICAL SECTIONS

DISCIPLINE: TRACK

SHEET NAME: E2-TRK-TYP-025

SHEET 97 OF 420

Jan, 15 2016 11:54 am V:\3400_ADC\CAD\00_EAST\PLANSHEETS\TRACK\E2-TRK-TYP.dwg By: V-RasulL

NOTES:
1. TRACK CENTERS NARROW FROM 16.62' TO 14.00' BETWEEN STA 2651+70.00 AND STA 2655+08.66.
2. SEE SYSTEM PLANS FOR INTRUSION DETECTION DETAILS.
3. SELECT GRANULAR DEPTH: STA 2651+70.00 TO STA 2661+40.00: 1.00'. STA 2661+60.00: 2.00'. TRANSITION LINEARLY BETWEEN STA 2661+40.00 AND STA 2661+60.00.
4. TRANSITION FROM 7.00' TO 8.00' BETWEEN STA 2661+40.00 AND STA 2661+60.00.
5. SEE URBAN DESIGN PLANS FOR FENCE LOCATION AND DETAILS.
6. FOR DITCH INVERT AND DETAILS, SEE DRAINAGE PLANS.
7. SEE SYSTEM PLANS FOR DUCTBANK AND CABLE TROUGH DETAILS.
8. SEE RETAINING WALL PLANS FOR DETAILS.
9. WALL ENDS AT STA 2657+60.00.

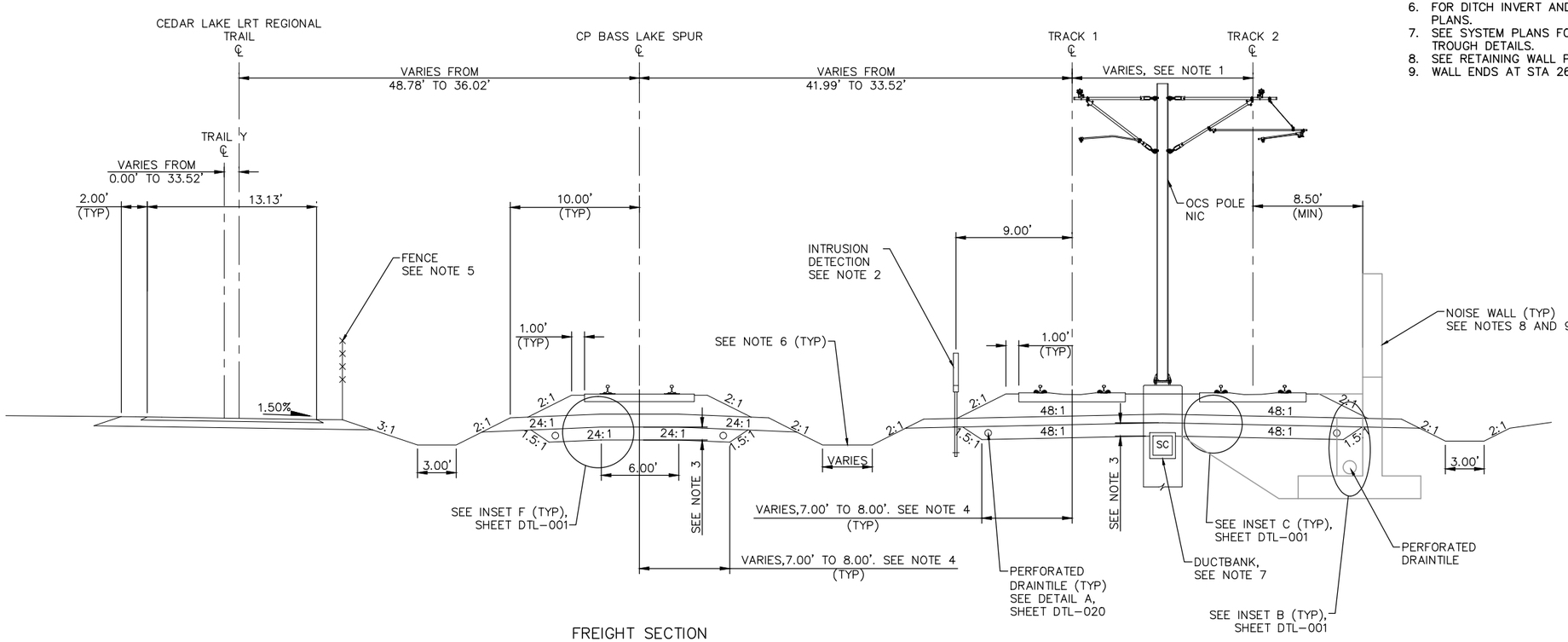

FREIGHT SECTION
STA 154+45.76 TO STA 166+00.71

TYPICAL SECTION
STA 2651+70.00 TO STA 2663+18.76

SCALE 0 2.5 5 10 IN FEET

NO.	DATE	BY	CHECK	DESIGN	REVISION / SUBMITTAL

AECOM

90% SUBMISSION - 01/22/16

METROPOLITAN COUNCIL

SOUTHWEST Green Line LRT Extension

CIVIL - VOLUME 3B
TRACK
TYPICAL SECTIONS

DISCIPLINE: TRACK

SHEET NAME: E2-TRK-TYP-026

SHEET 98 OF 420

Jan, 15 2016 11:55 am V:\3400_ADC\CAD\00_EAST\PLANSHEETS\TRACK\E2-TRK-TYP.dwg By: V-RasulL

NOTES:
1. TRACK CENTERS WIDEN FROM 14.00' TO 20.00' BETWEEN STA 2661+85.84 AND STA 2664+03.49.
2. SEE SYSTEM PLANS FOR INTRUSION DETECTION DETAILS.
3. SEE URBAN DESIGN PLANS FOR FENCE LOCATION AND DETAILS.
4. FOR DITCH INVERT AND DETAILS, SEE DRAINAGE PLANS.
5. SEE SYSTEM PLANS FOR DUCTBANK AND CABLE TROUGH DETAILS.
6. SEE RETAINING WALL PLANS FOR DETAILS.

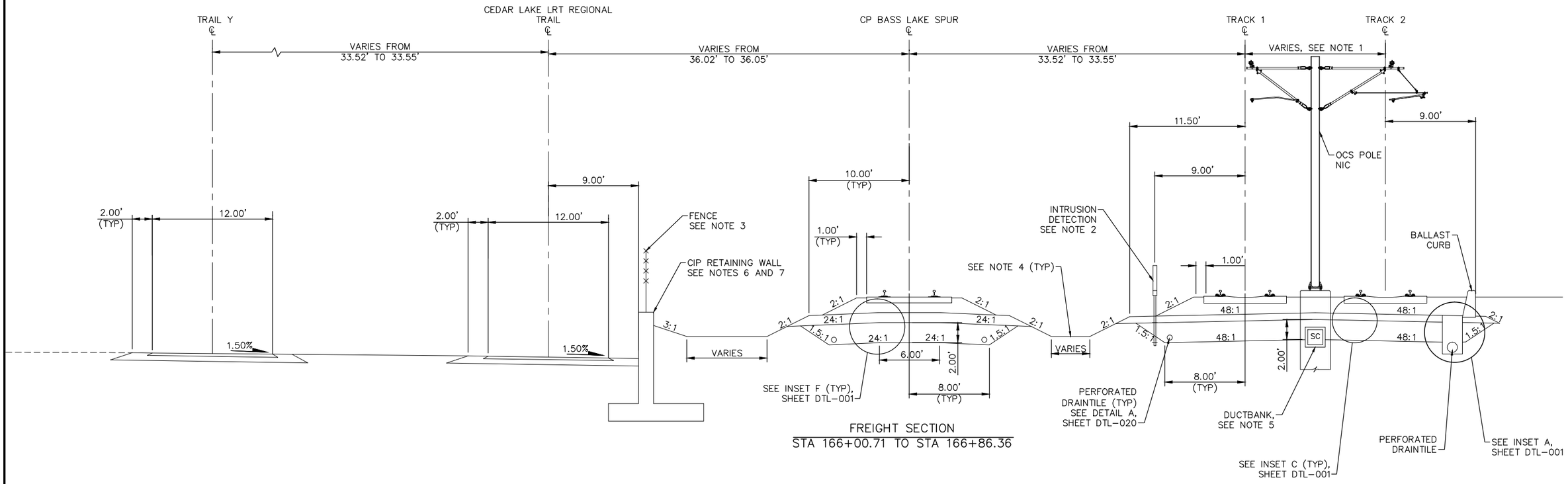

FREIGHT SECTION
STA 166+00.71 TO STA 166+86.36

TYPICAL SECTION
STA 2663+18.76 TO STA 2664+03.49

SCALE 0 2.5 5 10 IN FEET

NO.	DATE	BY	CHECK	DESIGN	REVISION / SUBMITTAL

AECOM

90% SUBMISSION - 01/22/16

METROPOLITAN COUNCIL

SOUTHWEST Green Line LRT Extension

CIVIL - VOLUME 3B
TRACK
TYPICAL SECTIONS

DISCIPLINE: TRACK

SHEET NAME: E2-TRK-TYP-027

SHEET 99 OF 420

Jan, 15 2016 11:55 am V:\3400_ADC\CAD\00_EAST\PLANSHEETS\TRACK\E2-TRK-TYP.dwg By: V-RasulL

NOTES:
1. TRACK CENTERS WIDEN FROM 20.00' TO 29.82' BETWEEN STA 2664+03.49 AND STA 2666+24.76.
2. SEE SYSTEM PLANS FOR INTRUSION DETECTION DETAILS.
3. CIP WALL STARTS AT STA 2664+39.24.
4. SEE SYSTEM PLANS FOR DUCTBANK AND CABLE TROUGH DETAILS.
5. SEE URBAN DESIGN PLANS FOR FENCE LOCATION AND DETAILS.
6. FOR DITCH INVERT AND DETAILS, SEE DRAINAGE PLANS.
7. SEE RETAINING WALL PLANS FOR DETAILS.

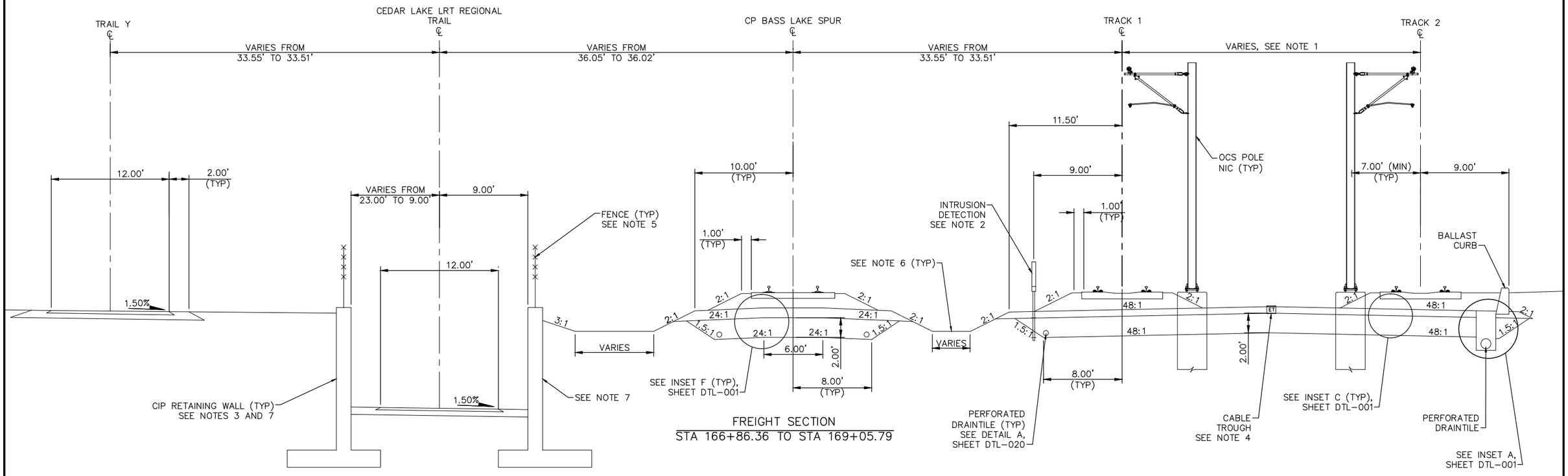

TYPICAL SECTION
STA 2664+03.49 TO STA 2666+24.76

0 2.5 5 10
SCALE IN FEET

NO.	DATE	BY	CHECK	DESIGN	REVISION / SUBMITTAL

AECOM

90% SUBMISSION - 01/22/16

METROPOLITAN COUNCIL

SOUTHWEST Green Line LRT Extension

CIVIL - VOLUME 3B
TRACK
TYPICAL SECTIONS

SHEET 100 OF 420

DISCIPLINE: TRACK

SHEET NAME: E2-TRK-TYP-028

Jan, 15 2016 11:55 am V:\3400_ADC\CAD\00_EAST\PLANSHEETS\TRACK\E2-TRK-TYP.dwg By: V-RasulL

NOTES:
1. TRACK CENTERS WIDEN FROM 29.82' TO 30.38' BETWEEN STA 2666+24.76 AND STA 2667+05.77.
2. SECTION DOES NOT ILLUSTRATE GRADE CROSSING AT WOODDALE AVE S. SEE TRACK PLANS AND DETAILS.
3. SEE SYSTEM PLANS FOR INTRUSION DETECTION DETAILS.
4. SEE SYSTEM PLANS FOR DUCTBANK AND CABLE TROUGH DETAILS.
5. SEE URBAN DESIGN PLANS FOR FENCE LOCATION AND DETAILS.
6. FOR DITCH INVERT AND DETAILS, SEE DRAINAGE PLANS.
7. SEE RETAINING WALL PLANS FOR DETAILS.
8. WOODDALE PEDESTRIAN UNDERPASS IS NOT ILLUSTRATED. SEE STRUCTURAL PLANS.
9. MnDOT BRIDGE 27J61. SEE STRUCTURE PLANS.
10. SELECT GRANULAR DEPTH: STA 2666+24.76: 2.00'; STA 2666+45 TO STA 2668+41.60: 1.00'. TRANSITION LINEARLY BETWEEN STA 2666+24.76 AND STA 2666+45.
11. TRANSITION FROM 8.00' TO 7.00' BETWEEN STA 2666+24.76 AND STA 2666+45.

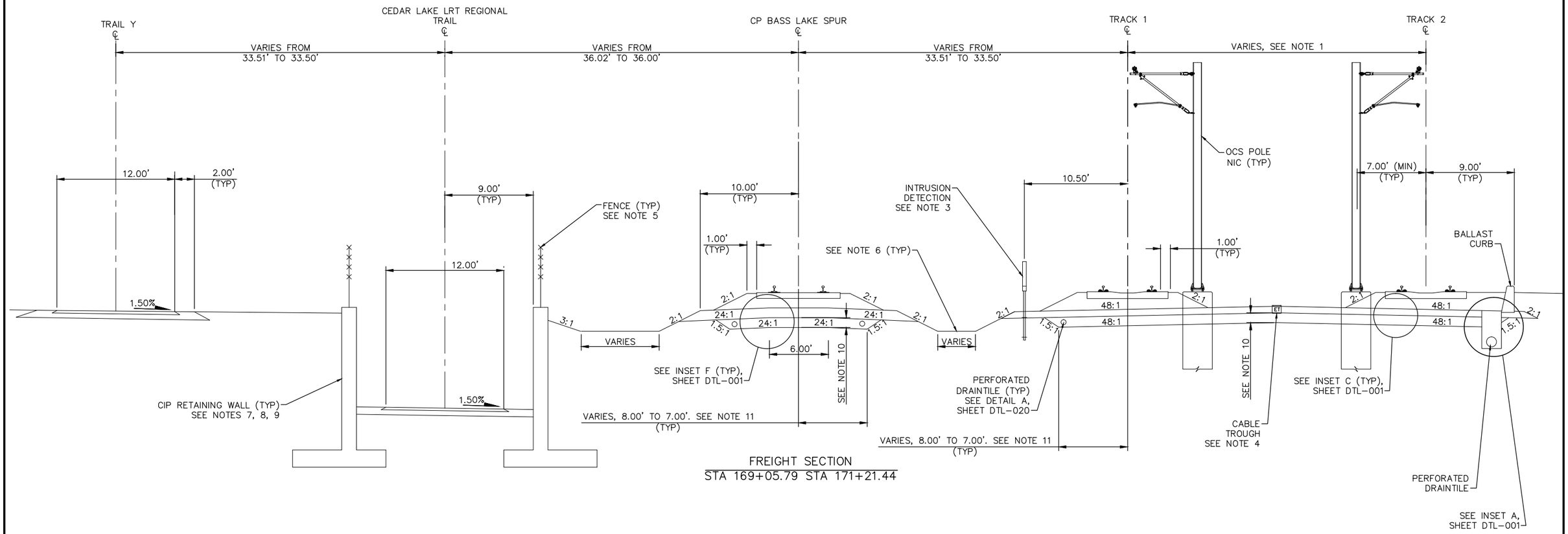

FREIGHT SECTION
STA 169+05.79 STA 171+21.44

TYPICAL SECTION
STA 2666+24.76 TO STA 2668+41.60

0 2.5 5 10
SCALE IN FEET

NO.	DATE	BY	CHECK	DESIGN	REVISION / SUBMITTAL

AECOM

90% SUBMISSION - 01/22/16

METROPOLITAN COUNCIL

SOUTHWEST Green Line LRT Extension

CIVIL - VOLUME 3B
TRACK
TYPICAL SECTIONS

SHEET 101 OF 420

DISCIPLINE: TRACK

SHEET NAME: E2-TRK-TYP-029

Jan, 15 2016 11:56 am V:\3400_ADC\CAD\00_EAST\PLANSHEETS\TRACK\E2-TRK-TYP.dwg By: V-RasulL

NOTES:
1. SEE SYSTEM PLANS FOR DUCTBANK AND CABLE TROUGH DETAILS.
2. SEE SYSTEM PLANS FOR INTRUSION DETECTION DETAILS.
3. SELECT GRANULAR DEPTH: STA 2668+41.60: 1.00'; STA 2668+71.60: 2.50'. TRANSITION LINEARLY BETWEEN STA 2668+41.60 AND STA 2668+71.60.
4. TRANSITION FROM 7.00' TO 8.50' BETWEEN STA 2668+41.60 AND STA 2668+71.60.
5. FOR DITCH INVERT AND DETAILS, SEE DRAINAGE PLANS.
6. SEE RETAINING WALL PLANS FOR DETAILS.
7. MnDOT BRIDGE 27J61. SEE STRUCTURE PLANS.
8. WOODDALE PEDESTRIAN UNDERPASS IS NOT ILLUSTRATED. SEE CIVIL PLANS.
9. SEE URBAN DESIGN PLANS FOR FENCE LOCATION AND DETAILS.

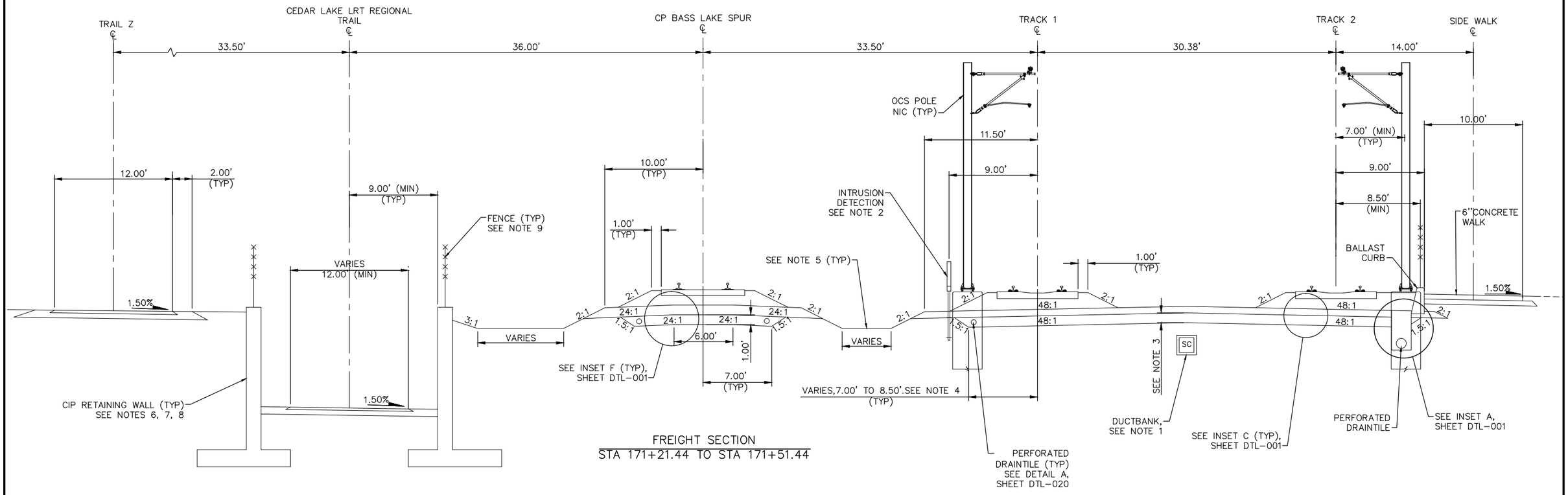

FREIGHT SECTION
STA 171+21.44 TO STA 171+51.44

TYPICAL SECTION
STA 2668+41.60 TO STA 2668+71.60

SCALE 0 2.5 5 10 IN FEET

NO.	DATE	BY	CHECK	DESIGN	REVISION / SUBMITTAL

AECOM

90% SUBMISSION - 01/22/16

METROPOLITAN COUNCIL

SOUTHWEST Green Line LRT Extension

CIVIL - VOLUME 3B
TRACK
TYPICAL SECTIONS

SHEET 102 OF 420

DISCIPLINE: TRACK

SHEET NAME: E2-TRK-TYP-030

Jan, 15 2016 11:56 am V:\3400_ADC\CAD\00_EAST\PLANSHEETS\TRACK\E2-TRK-TYP.dwg By: V-RasulL

NOTES:
1. SEE STATION PLANS FOR STATION PLATFORM DETAILS.
2. SEE SYSTEM PLANS FOR INTRUSION DETECTION DETAILS.
3. CIP WALL ENDS AT STA 2670+48.27.
4. SEE SYSTEM PLANS FOR DUCTBANK AND CABLE TROUGH DETAILS.
5. SEE URBAN DESIGN PLANS FOR FENCE LOCATION AND DETAILS.
6. FOR DITCH INVERT AND DETAILS, SEE DRAINAGE PLANS.
7. SEE RETAINING WALL PLANS FOR DETAILS.

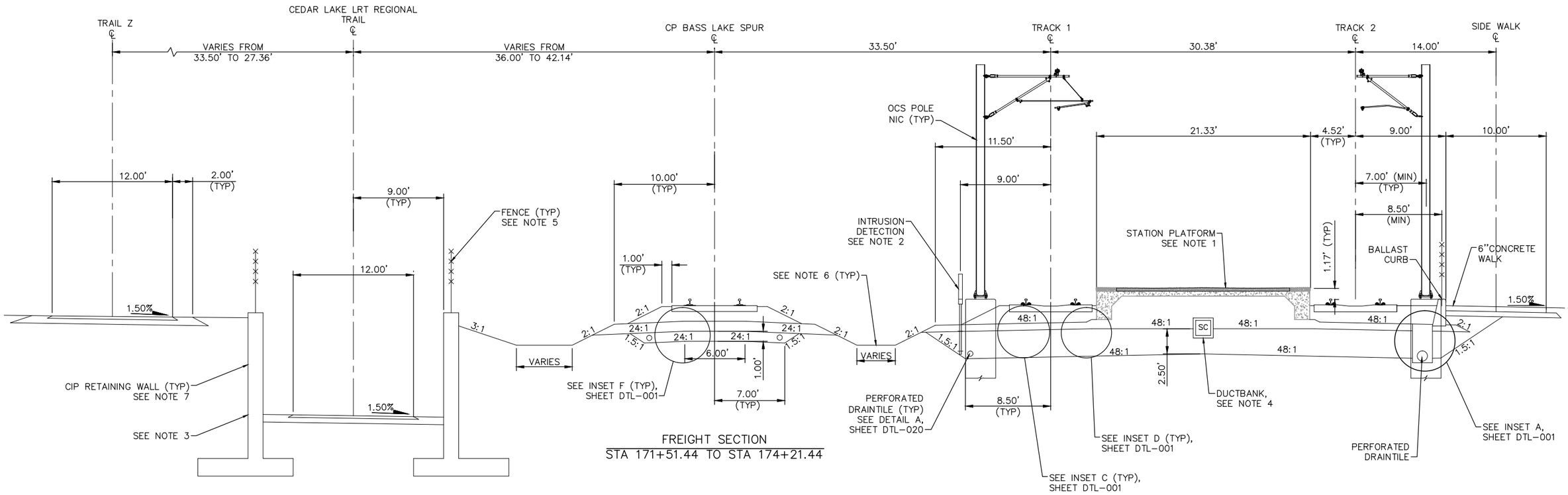

FREIGHT SECTION
STA 171+51.44 TO STA 174+21.44

TYPICAL SECTION – WOODDALE STATION
STA 2668+71.60 TO STA 2671+41.60

SCALE 0 2.5 5 10 IN FEET

NO.	DATE	BY	CHECK	DESIGN	REVISION / SUBMITTAL

AECOM

90% SUBMISSION - 01/22/16

METROPOLITAN COUNCIL

SOUTHWEST Green Line LRT Extension

CIVIL - VOLUME 3B
TRACK
TYPICAL SECTIONS

DISCIPLINE: TRACK

SHEET NAME: E2-TRK-TYP-031

SHEET 103 OF 420

Jan, 15 2016 11:56 am V:\3400_ADC\CAD\00_EAST\PLANSHEETS\TRACK\E2-TRK-TYP.dwg By: V-RasulL

NOTES:
1. BALLAST CURB ENDS AT STA. 2671+71.60
2. SEE SYSTEM PLANS FOR INTRUSION DETECTION DETAILS.
3. SELECT GRANULAR DEPTH: STA 2671+41.60: 2.50'; STA 2671+72.00 TO STA 2671+81.60: 1.00'. TRANSITION LINEARLY BETWEEN STA 2671+41.60 AND STA 2671+72.00.
4. TRANSITION FROM 8.50' TO 7.00' BETWEEN STA 2671+41.60 AND STA 2671+72.00.
5. SEE URBAN DESIGN PLANS FOR FENCE LOCATION AND DETAILS.
6. FOR DITCH INVERT AND DETAILS, SEE DRAINAGE PLANS.
7. SEE RETAINING WALL PLANS FOR DETAILS.
8. SEE SYSTEM PLANS FOR DUCTBANK AND CABLE TROUGH DETAILS.

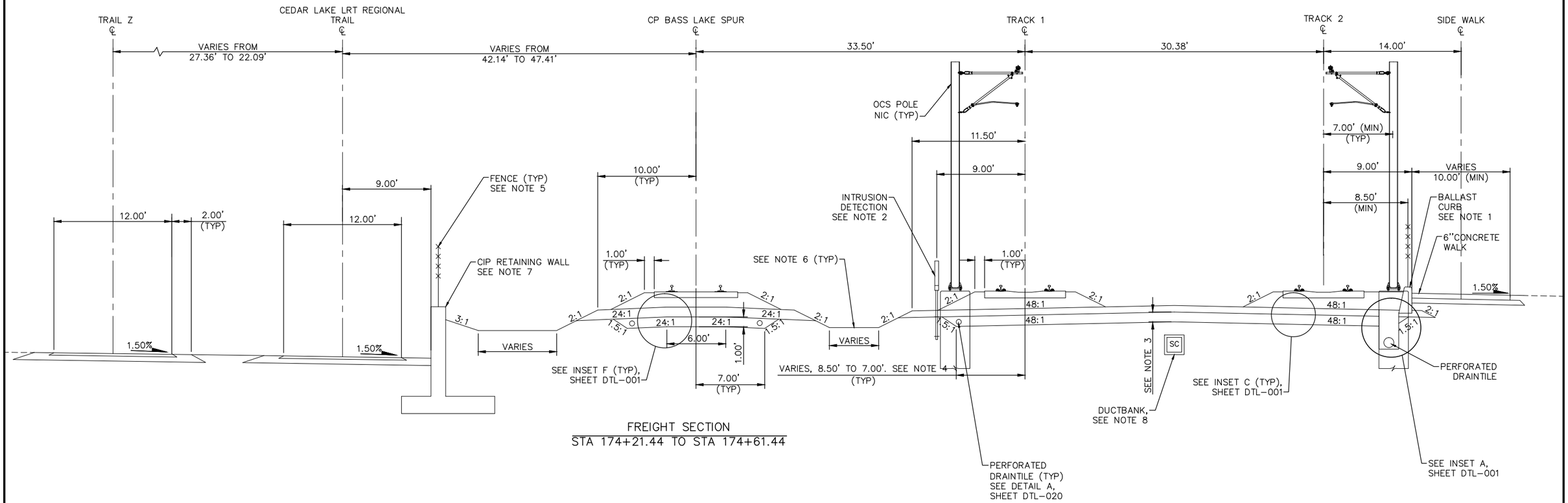

FREIGHT SECTION
STA 174+21.44 TO STA 174+61.44

TYPICAL SECTION
STA 2671+41.60 TO STA 2671+81.60

SCALE 0 2.5 5 10 IN FEET

NO.	DATE	BY	CHECK	DESIGN	REVISION / SUBMITTAL

AECOM

90% SUBMISSION - 01/22/16

METROPOLITAN COUNCIL

SOUTHWEST Green Line LRT Extension

CIVIL - VOLUME 3B
TRACK
TYPICAL SECTIONS

DISCIPLINE: TRACK

SHEET NAME: E2-TRK-TYP-032

SHEET 104 OF 420

Jan, 15 2016 11:57 am V:\3400_ADC\CAD\00_EAST\PLANSHEETS\TRACK\E2-TRK-TYP.dwg By: V-RasulL

NOTES:
1. TRACK CENTERS NARROW FROM 30.38' TO 23.05' BETWEEN STA 2672+10.77 AND STA 2674+54.81.
2. SEE RETAINING WALL PLANS FOR DETAILS.
3. SEE SYSTEM PLANS FOR INTRUSION DETECTION DETAILS.
4. CIP WALL ENDS AT STA 2672+62.59.
5. SIDE WALK ENDS AT STA 2674+53.31.
6. SEE SYSTEM PLANS FOR DUCTBANK AND CABLE TROUGH DETAILS.
7. SEE URBAN DESIGN PLANS FOR FENCE LOCATION AND DETAILS.
8. FOR DITCH INVERT AND DETAILS, SEE DRAINAGE PLANS.

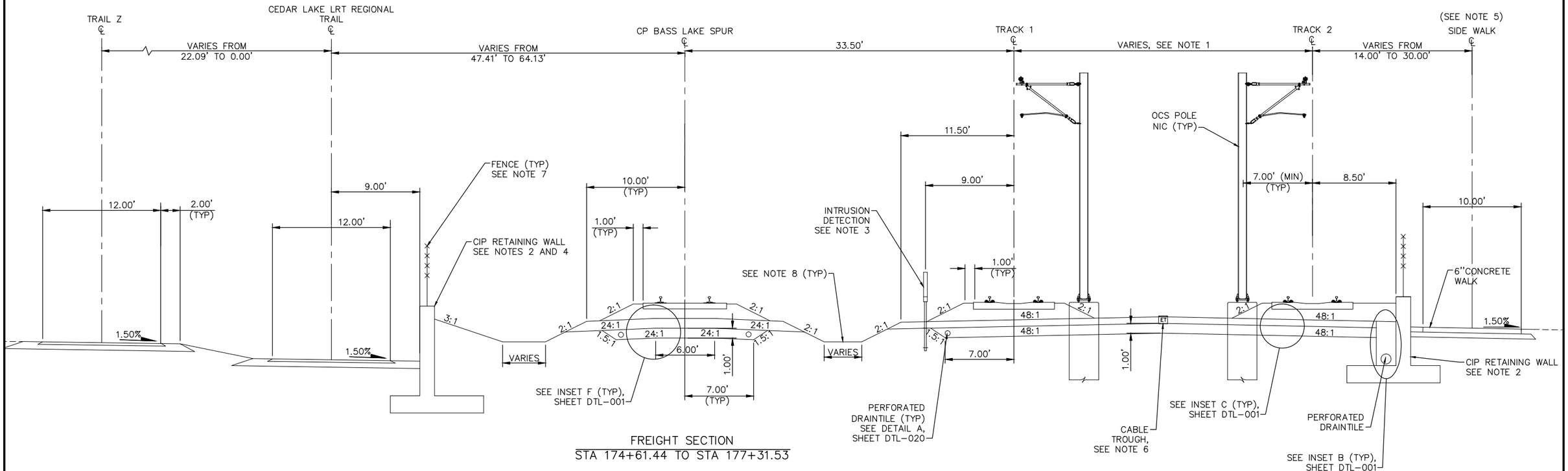

FREIGHT SECTION
STA 174+61.44 TO STA 177+31.53

TYPICAL SECTION
STA 2671+81.60 TO STA 2674+54.81

SCALE 0 2.5 5 10 IN FEET

NO.	DATE	BY	CHECK	DESIGN	REVISION / SUBMITTAL

AECOM

90% SUBMISSION - 01/22/16

METROPOLITAN COUNCIL

SOUTHWEST Green Line LRT Extension

CIVIL - VOLUME 3B
TRACK
TYPICAL SECTIONS

DISCIPLINE: TRACK

SHEET NAME: E2-TRK-TYP-033

SHEET 105 OF 420

Jan, 15 2016 11:57 am V:\3400_ADC\CAD\00_EAST\PLANSHEETS\TRACK\E2-TRK-TYP.dwg By: V-RosulL

NOTES:
1. TRACK CENTERS NARROW FROM 23.05' TO 20.48' BETWEEN STA 2674+54.81 AND STA 2675+03.31.
2. SEE RETAINING WALL PLANS FOR DETAILS.
3. SEE SYSTEM PLANS FOR INTRUSION DETECTION DETAILS.
4. FOR DITCH INVERT AND DETAILS, SEE DRAINAGE PLANS.
5. SEE SYSTEM PLANS FOR DUCTBANK AND CABLE TROUGH DETAILS.
6. TPSS NOT ILLUSTRATED.
7. SEE URBAN DESIGN PLANS FOR FENCE LOCATION AND DETAILS.

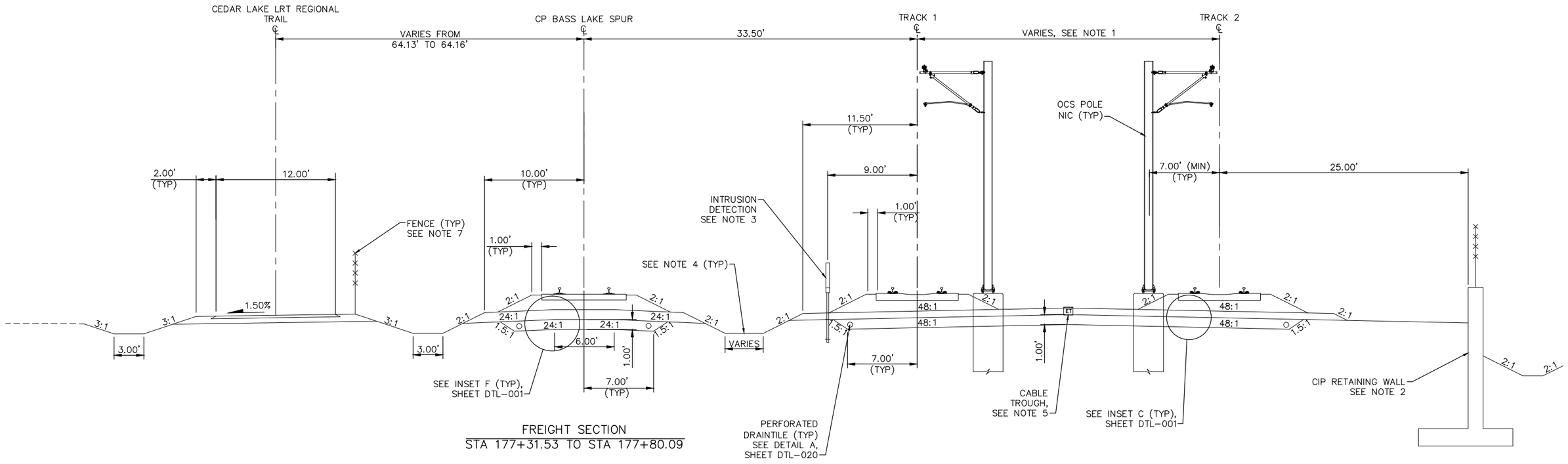

FREIGHT SECTION
STA 177+31.53 TO STA 177+80.09

TYPICAL SECTION
STA 2674+54.81 TO STA 2675+03.31

SCALE 0 2.5 5 10 IN FEET

NO.	DATE	BY	CHECK	DESIGN	REVISION / SUBMITTAL

AECOM

90% SUBMISSION - 01/22/16

METROPOLITAN COUNCIL

SOUTHWEST Green Line LRT Extension

CIVIL - VOLUME 3B
TRACK
TYPICAL SECTIONS

DISCIPLINE: TRACK

SHEET NAME: E2-TRK-TYP-034

SHEET 106 OF 420

Jan, 15 2016 11:57 am V:\3400_ADC\CAD\00_EAST\PLANSHEETS\TRACK\E2-TRK-TYP.dwg By: V-RasulL

NOTES:
1. TRACK CENTERS NARROW FROM 20.48' TO 20.00' BETWEEN STA 2675+03.31 AND STA 2675+13.05.
2. SEE RETAINING WALL PLANS FOR DETAILS.
3. SEE SYSTEM PLANS FOR INTRUSION DETECTION DETAILS.
4. FOR DITCH INVERT AND DETAILS, SEE DRAINAGE PLANS.
5. SEE SYSTEM PLANS FOR DUCTBANK AND CABLE TROUGH DETAILS.
6. SEE URBAN DESIGN PLANS FOR FENCE LOCATION AND DETAILS.

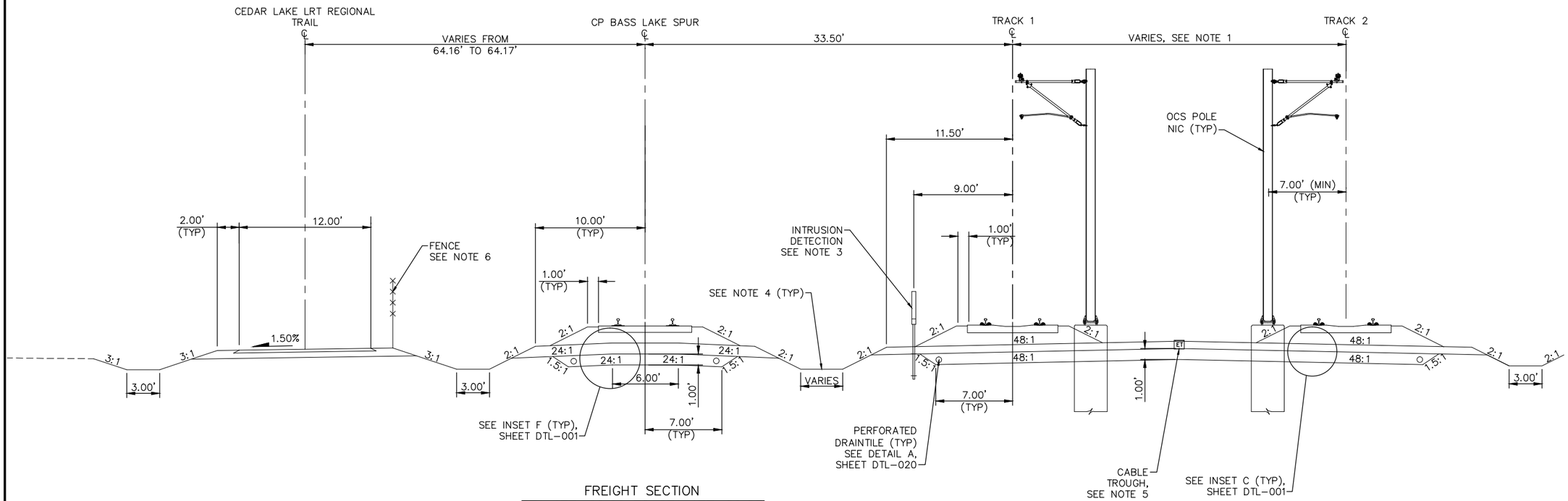

FREIGHT SECTION
STA 177+80.09 TO STA 177+89.85

TYPICAL SECTION
STA 2675+03.31 TO STA 2675+13.05

SCALE 0 2.5 5 10 IN FEET

NO.	DATE	BY	CHECK	DESIGN	REVISION / SUBMITTAL

AECOM

90% SUBMISSION - 01/22/16

METROPOLITAN COUNCIL

SOUTHWEST Green Line LRT Extension

CIVIL - VOLUME 3B
TRACK
TYPICAL SECTIONS

DISCIPLINE: TRACK

SHEET NAME: E2-TRK-TYP-035

SHEET 107 OF 420

Jan, 15 2016 11:58 am V:\3400_ADC\CAD\00_EAST\PLANSHEETS\TRACK\E2-TRK-TYP.dwg By: V-RasulL

NOTES:
1. TRACK CENTERS NARROW FROM 20.00' TO 14.00' BETWEEN STA 2675+13.05 AND STA 2677+30.69.
2. SEE SYSTEM PLANS FOR INTRUSION DETECTION DETAILS.
3. FOR DITCH INVERT AND DETAILS, SEE DRAINAGE PLANS.
4. SEE SYSTEM PLANS FOR DUCTBANK AND CABLE TROUGH DETAILS.
5. SEE URBAN DESIGN PLANS FOR FENCE LOCATION AND DETAILS.

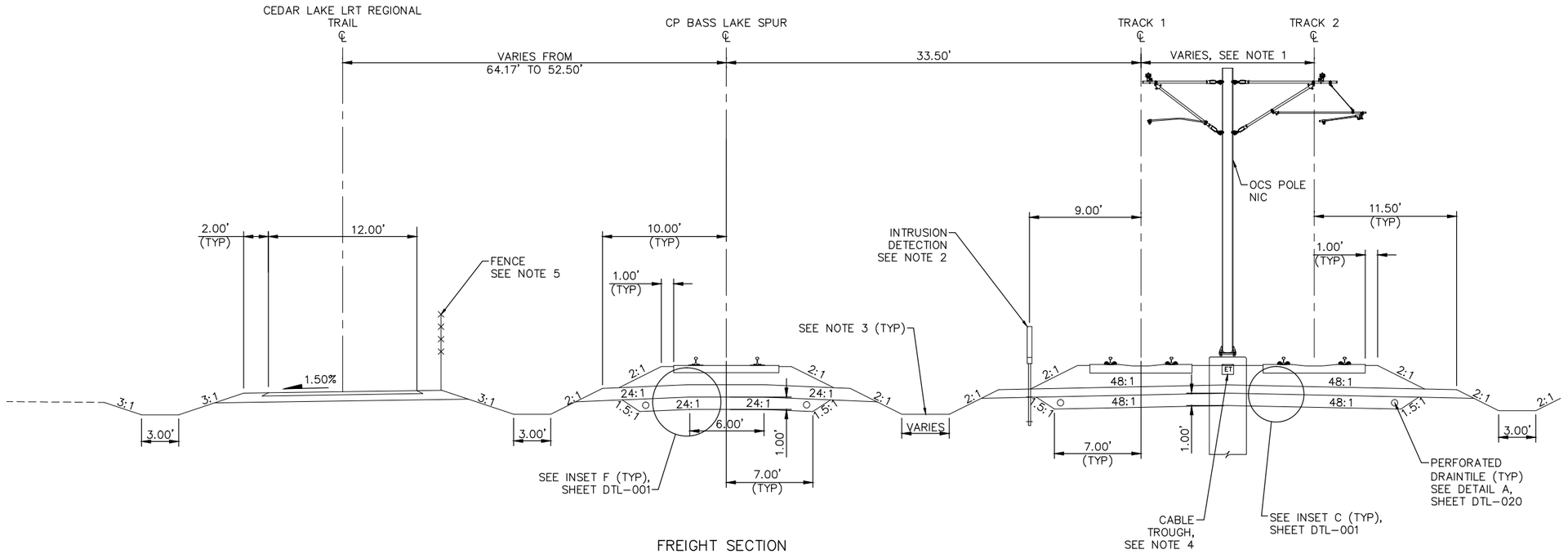

FREIGHT SECTION
STA 177+89.85 TO STA 191+19.11

TYPICAL SECTION
STA 2675+13.05 TO STA 2688+10.75

SCALE 0 2.5 5 10 IN FEET

NO.	DATE	BY	CHECK	DESIGN	REVISION / SUBMITTAL

AECOM

90% SUBMISSION - 01/22/16

METROPOLITAN COUNCIL

SOUTHWEST Green Line LRT Extension

CIVIL - VOLUME 3B
TRACK
TYPICAL SECTIONS

SHEET 108 OF 420

DISCIPLINE: TRACK

SHEET NAME: E2-TRK-TYP-036

Jan, 15 2016 11:58 am V:\3400_ADC\CAD\00_EAST\PLANSHEETS\TRACK\E2-TRK-TYP.dwg By: V-RasulL

NOTE:
1. MnDOT BRIDGE 27W34. SEE STRUCTURAL PLANS.
2. MnDOT BRIDGE 27303. SEE STRUCTURAL PLANS.
3. SEE SYSTEM PLANS FOR DUCTBANK AND CABLE TROUGH DETAILS.
4. FOR GUARD RAIL LIMITS SEE TRACK CHARTS.

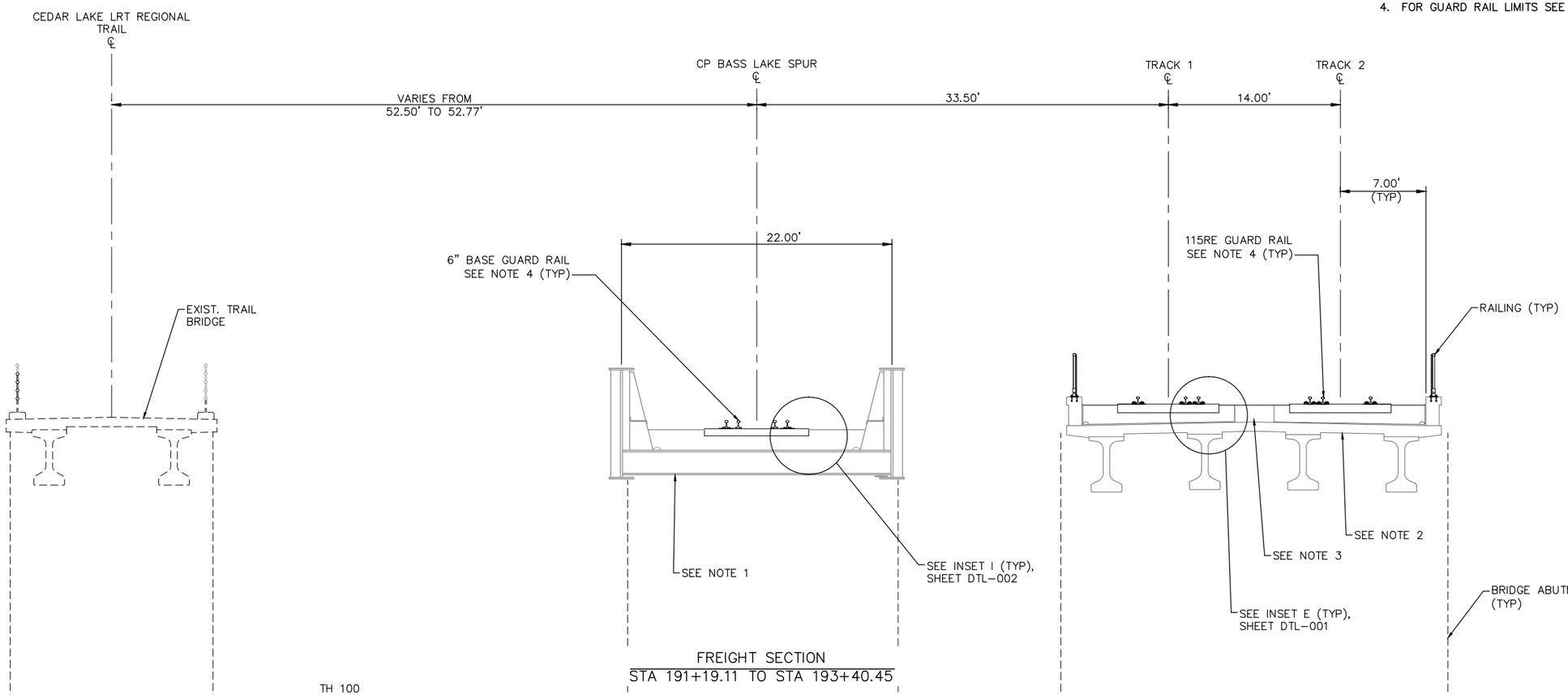

FREIGHT SECTION
STA 191+19.11 TO STA 193+40.45

TYPICAL SECTION
STA 2688+10.75 TO STA 2690+30.50

SCALE 0 2.5 5 10 IN FEET

NO.	DATE	BY	CHECK	DESIGN	REVISION / SUBMITTAL

AECOM

90% SUBMISSION - 01/22/16

METROPOLITAN COUNCIL

SOUTHWEST Green Line LRT Extension

CIVIL - VOLUME 3B
TRACK
TYPICAL SECTIONS

DISCIPLINE: TRACK

SHEET NAME: E2-TRK-TYP-037

SHEET 109 OF 420

Jan, 15 2016 11:58 am V:\3400_ADC\CAD\00_EAST\PLANSHEETS\TRACK\E2-TRK-TYP.dwg By: V-RasulL

NOTES:
1. TRACK CENTERS WIDEN FROM 14.00' TO 20.00' BETWEEN STA 2705+85.84 AND STA 2708+03.49.
2. SEE SYSTEM PLANS FOR INTRUSION DETECTION DETAILS.
3. BALLAST CURB AND PERFORATED DRAINTILE FROM STA 2693+85.00 TO STA 2694+25.00.
4. SEE SYSTEM PLANS FOR DUCTBANK AND CABLE TROUGH DETAILS.
5. SEE URBAN DESIGN PLANS FOR FENCE LOCATION AND DETAILS.
6. FOR DITCH INVERT AND DETAILS, SEE DRAINAGE PLANS.
7. SEE RETAINING WALL PLANS FOR DETAILS.
8. CIP WALL STARTS AT STA 2706+95.15.

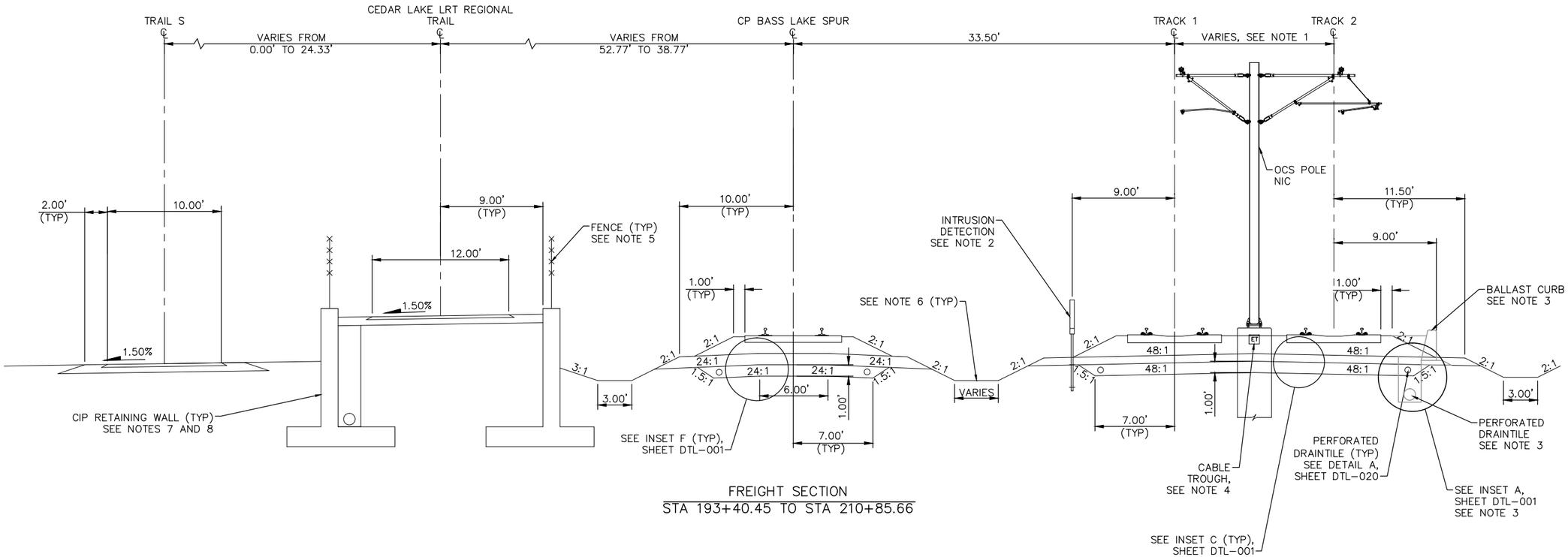

FREIGHT SECTION
STA 193+40.45 TO STA 210+85.66

TYPICAL SECTION
STA 2690+30.50 TO STA 2708+03.49

SCALE 0 2.5 5 10 IN FEET

NO.	DATE	BY	CHECK	DESIGN	REVISION / SUBMITTAL

AECOM

90% SUBMISSION - 01/22/16

METROPOLITAN COUNCIL

SOUTHWEST Green Line LRT Extension

CIVIL - VOLUME 3B
TRACK
TYPICAL SECTIONS

DISCIPLINE: TRACK

SHEET NAME: E2-TRK-TYP-038

SHEET 110 OF 420

Jan, 15 2016 11:59 am V:\3400_ADC\CAD\00_EAST\PLANSHEETS\TRACK\E2-TRK-TYP.dwg By: V-RasulL

NOTES:
1. TRACK CENTERS WIDEN FROM 20.00' TO 30.38' BETWEEN STA 2708+03.49 AND STA 2711+05.77.
2. SEE SYSTEM PLANS FOR INTRUSION DETECTION DETAILS.
3. SEE BRIDGE DESIGN PLANS FOR FENCE LOCATION AND DETAILS.
4. SEE SYSTEM PLANS FOR DUCTBANK AND CABLE TROUGH DETAILS.
5. SECTION DOES NOT ILLUSTRATE GRADE CROSSING AT BELTLINE BLVD. SEE TRACK PLANS AND DETAILS.
6. FOR DITCH INVERT AND DETAILS, SEE DRAINAGE PLANS.
7. SEE RETAINING WALL PLANS FOR DETAILS.
8. MnDOT BRIDGE R0692. SEE STRUCTURAL PLANS.
9. CIP WALL ENDS AND BRIDGE STARTS AT STA 2709+96.51.
10. TRAIL S ENDS AT STA 2711+27.94.

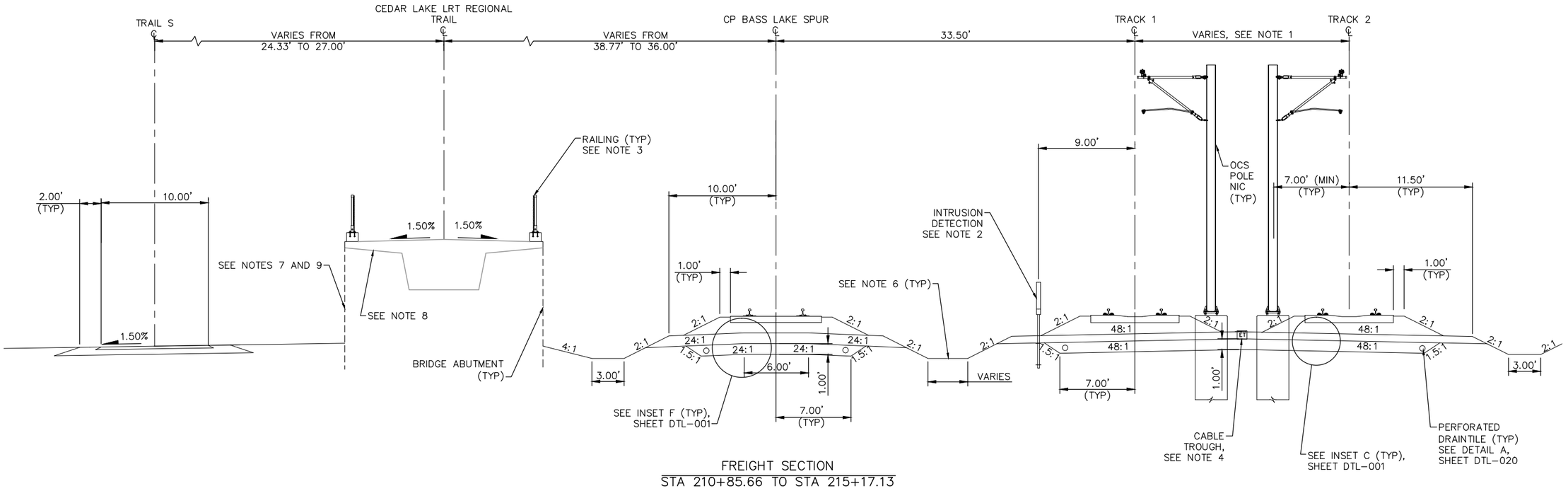

FREIGHT SECTION
STA 210+85.66 TO STA 215+17.13

TYPICAL SECTION
STA 2708+03.49 TO STA 2712+38.00

SCALE 0 2.5 5 10 IN FEET

NO.	DATE	BY	CHECK	DESIGN	REVISION / SUBMITTAL

AECOM

90% SUBMISSION - 01/22/16

METROPOLITAN COUNCIL

SOUTHWEST Green Line LRT Extension

CIVIL - VOLUME 3B
TRACK
TYPICAL SECTIONS

DISCIPLINE: TRACK

SHEET NAME: E2-TRK-TYP-039

SHEET 111 OF 420

Jan. 15 2016 11:59 am V:\3400_ADC\CAD\00_EAST\PLANSHEETS\TRACK\E2-TRK-TYP.dwg By: V-RasulL

NOTES:
1. SIDE WALK STARTS AT STA. 2712+21.99.
2. SEE SYSTEM PLANS FOR INTRUSION DETECTION DETAILS.
3. SELECT GRANULAR DEPTH: STA 2712+35.88 TO STA 2712+50.00: 1.00'; STA 2712+80.77: 2.50'. TRANSITION LINEARLY BETWEEN STA 2712+50.00 AND STA 2712+80.77.
4. TRANSITION FROM 7.00' TO 8.50' BETWEEN STA 2712+50.00 AND STA 2712+80.77.
5. MnDOT BRIDGE R0692. SEE STRUCTURAL PLANS.
6. SEE URBAN DESIGN PLANS FOR FENCE LOCATION AND DETAILS.
7. FOR DITCH INVERT AND DETAILS, SEE DRAINAGE PLANS.
8. SEE SYSTEM PLANS FOR DUCTBANK AND CABLE TROUGH DETAILS.

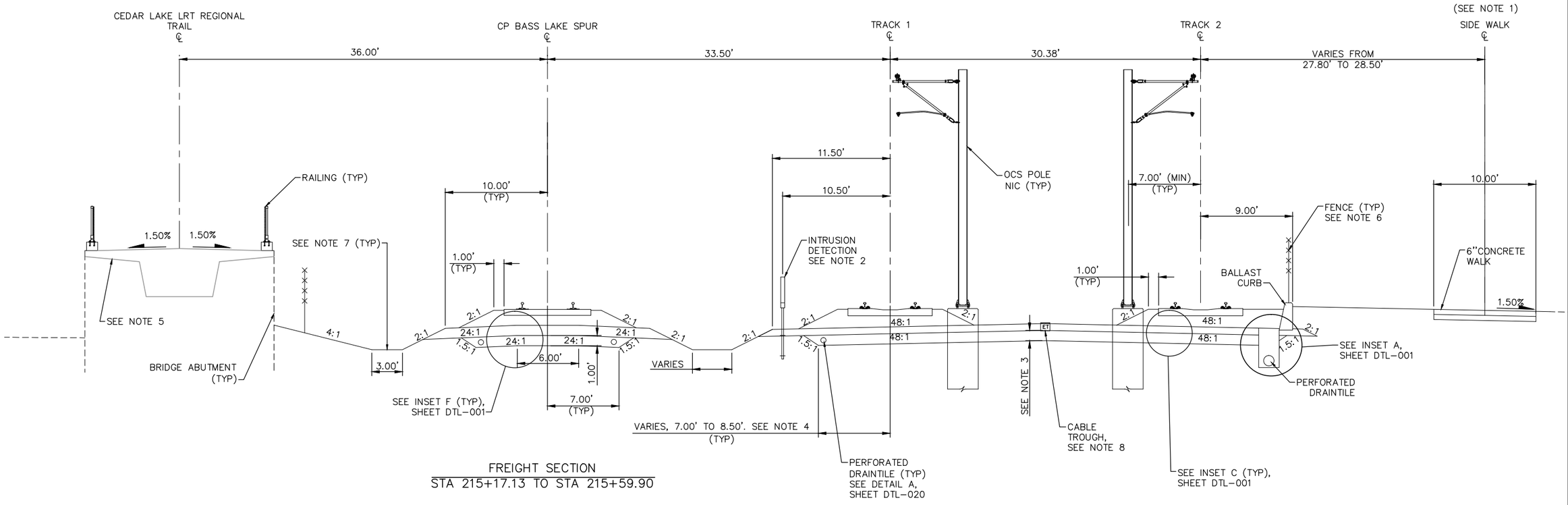

FREIGHT SECTION
STA 215+17.13 TO STA 215+59.90

TYPICAL SECTION
STA 2712+38.00 TO STA 2712+80.77

SCALE 0 2.5 5 10 IN FEET

NO.	DATE	BY	CHECK	DESIGN	REVISION / SUBMITTAL

AECOM

90% SUBMISSION - 01/22/16

METROPOLITAN COUNCIL

SOUTHWEST Green Line LRT Extension

CIVIL - VOLUME 3B
TRACK
TYPICAL SECTIONS

DISCIPLINE: TRACK

SHEET NAME: E2-TRK-TYP-040

SHEET 112 OF 420

Jan, 15 2016 11:59 am V:\3400_ADC\CAD\00_EAST\PLANSHEETS\TRACK\E2-TRK-TYP.dwg By: V-RasulL

NOTES:
1. SEE STATION PLANS FOR STATION PLATFORM DETAILS.
2. SEE SYSTEM PLANS FOR INTRUSION DETECTION DETAILS.
3. MnDOT BRIDGE R0692. SEE STRUCTURAL PLANS.
4. SEE SYSTEM PLANS FOR DUCTBANK AND CABLE TROUGH DETAILS.
5. SEE URBAN DESIGN PLANS FOR FENCE LOCATION AND DETAILS.
6. FOR DITCH INVERT AND DETAILS, SEE DRAINAGE PLANS.

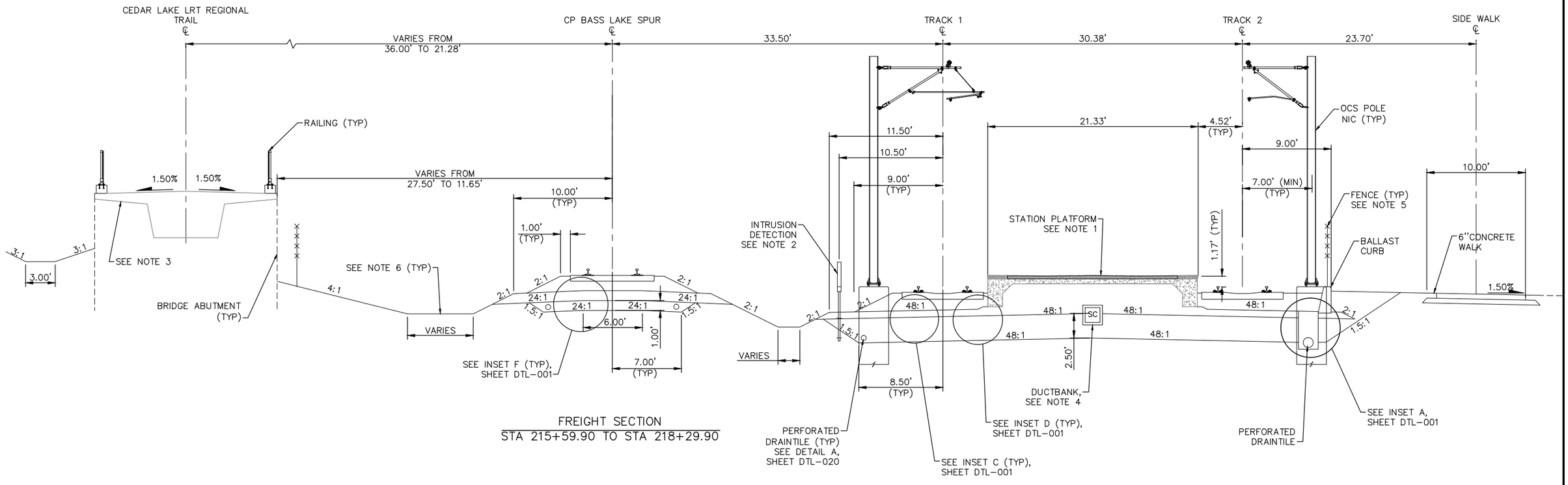

TYPICAL SECTION – BELTLINE STATION
STA 2712+80.77 TO STA 2715+50.77

SCALE 0 2.5 5 10 IN FEET

NO.	DATE	BY	CHECK	DESIGN	REVISION / SUBMITTAL

AECOM

90% SUBMISSION - 01/22/16

METROPOLITAN COUNCIL

SOUTHWEST Green Line LRT Extension

CIVIL - VOLUME 3B
TRACK
TYPICAL SECTIONS

DISCIPLINE: TRACK

SHEET NAME: E2-TRK-TYP-041

SHEET 113 OF 420

Jan, 15 2016 12:00 pm V:\3400_ADC\CAD\00_EAST\PLANSHEETS\TRACK\E2-TRK-TYP.dwg By: V-RasulL

NOTES:
1. TRACK CENTERS NARROW FROM 30.38' TO 20.00' BETWEEN STA 2716+22.40 AND STA 2719+00.73.
2. MnDOT BRIDGE R0692. SEE STRUCTURAL PLANS.
3. SEE SYSTEM PLANS FOR INTRUSION DETECTION DETAILS.
4. SELECT GRANULAR DEPTH: STA 2715+50.77: 2.50'; STA 2718+70.00 TO STA 2719+00.73: 1.00'. TRANSITION LINEARLY BETWEEN STA 2715+50.77 AND STA 2718+70.00.
5. TRANSITION FROM 8.50' TO 7.00' BETWEEN STA 2715+50.77 AND STA 2718+70.00.
6. SEE SYSTEM PLANS FOR DUCTBANK AND CABLE TROUGH DETAILS.
7. BRIDGE CROSSES LRT TRACK 2 AT STA 2717+10.92.
8. SEE URBAN DESIGN PLANS FOR FENCE LOCATION AND DETAILS.
9. FOR DITCH INVERT AND DETAILS, SEE DRAINAGE PLANS.
10. BALLAST CURB ENDS AT STA 2717+50.00.
11. SIDE WALK ENDS AT 2715+90.77 AND BECOMES TRAIL D.

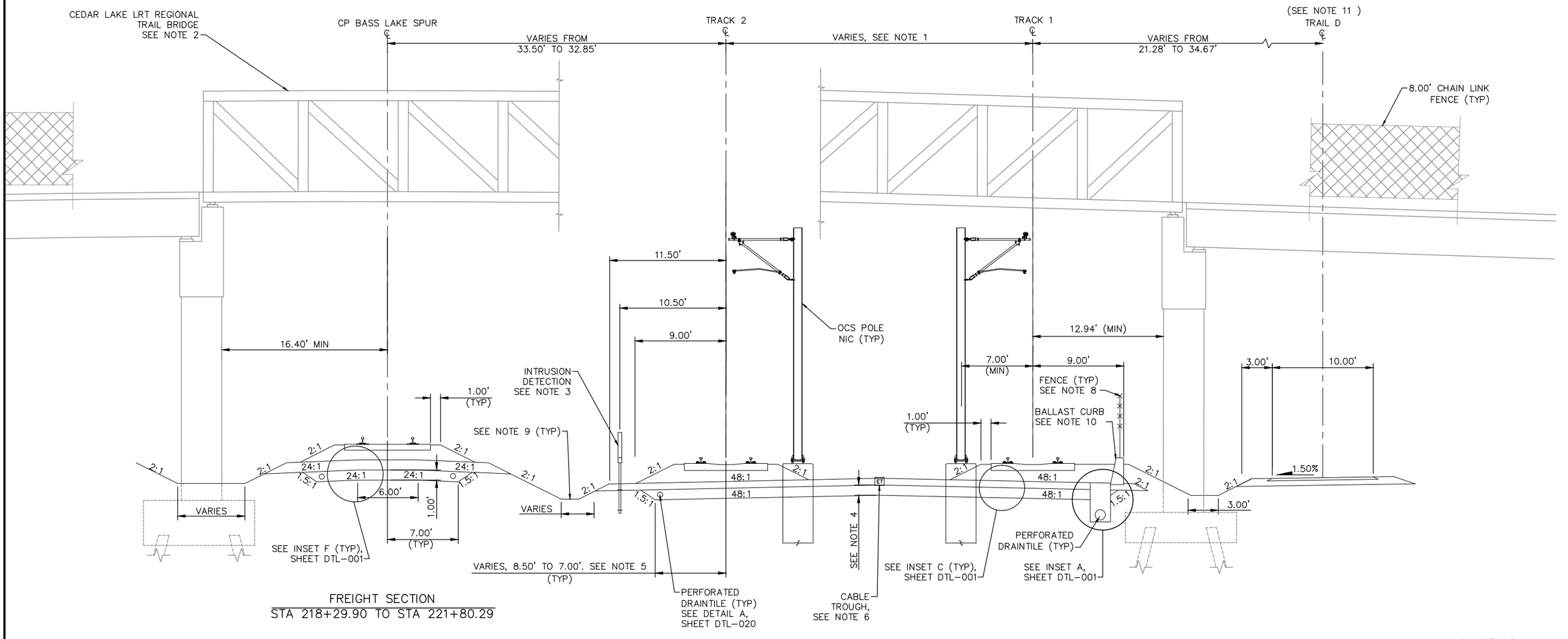

FREIGHT SECTION
STA 218+29.90 TO STA 221+80.29

TYPICAL SECTION
STA 2715+50.77 TO STA 2719+00.73

SCALE 0 2.5 5 10 IN FEET

NO.	DATE	BY	CHECK	DESIGN	REVISION / SUBMITTAL

AECOM

90% SUBMISSION - 01/22/16

METROPOLITAN COUNCIL

SOUTHWEST Green Line LRT Extension

CIVIL - VOLUME 3B
TRACK
TYPICAL SECTIONS

DISCIPLINE: TRACK

SHEET NAME: E2-TRK-TYP-042

SHEET 114 OF 420

Jan, 15 2016 12:00 pm V:\3400_ADC\CAD\00_EAST\PLANSHEETS\TRACK\E2-TRK-TYP.dwg By: V-RasulL

NOTES:
1. TRACK CENTERS NARROW FROM 20.00' TO 14.00' BETWEEN STA 2719+00.73 AND STA 2720+98.21.
2. FOR DITCH INVERT AND DETAILS, SEE DRAINAGE PLANS.
3. SEE SYSTEM PLANS FOR INTRUSION DETECTION DETAILS.
4. SPECIAL TRACKWORK NOT ILLUSTRATED.
5. MnDOT BRIDGE R0692. SEE STRUCTURAL PLANS.
6. SEE SYSTEM PLANS FOR DUCTBANK AND CABLE TROUGH DETAILS.
7. SEE URBAN DESIGN PLANS FOR FENCE LOCATION AND DETAILS.

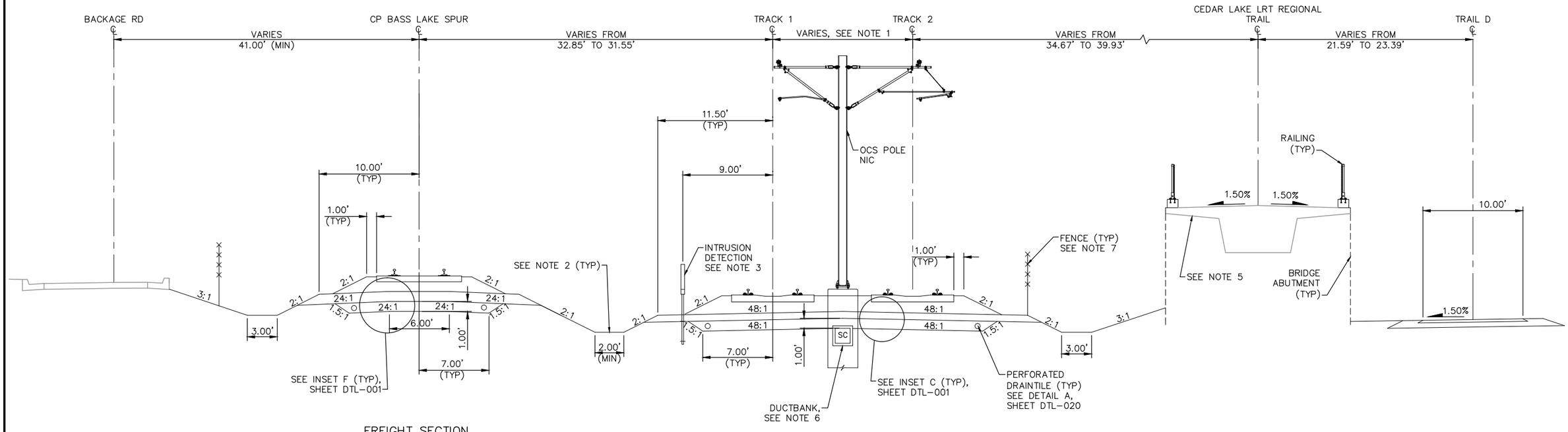

FREIGHT SECTION
STA 221+80.29 TO STA 223+01.38

TYPICAL SECTION
STA 2719+00.73 TO STA 2720+19.29

SCALE 0 2.5 5 10 IN FEET

NO.	DATE	BY	CHECK	DESIGN	REVISION / SUBMITTAL

AECOM

90% SUBMISSION - 01/22/16

METROPOLITAN COUNCIL

SOUTHWEST Green Line LRT Extension

CIVIL - VOLUME 3B
TRACK
TYPICAL SECTIONS

DISCIPLINE: TRACK

SHEET NAME: E2-TRK-TYP-043

SHEET 115 OF 420

Jan, 15 2016 12:00 pm V:\3400_ADC\CAD\00_EAST\PLANSHEETS\TRACK\E2-TRK-TYP.dwg By: V-RasulL

NOTES:
1. TRACK CENTERS NARROWS FROM 20.00' TO 14.00' BETWEEN STA 2719+00.00 AND STA 2720+98.21.
2. SEE RETAINING WALL PLANS FOR DETAILS.
3. SEE SYSTEM PLANS FOR INTRUSION DETECTION DETAILS.
4. SPECIAL TRACKWORK NOT ILLUSTRATED.
5. SEE URBAN DESIGN PLANS FOR FENCE LOCATION AND DETAILS.
6. SEE SYSTEM PLANS FOR DUCTBANK AND CABLE TROUGH DETAILS.
7. SEE SYSTEM PLANS FOR DUCTBANK AND CABLE TROUGH DETAILS.
8. FOR DITCH INVERT AND DETAILS, SEE DRAINAGE PLANS.

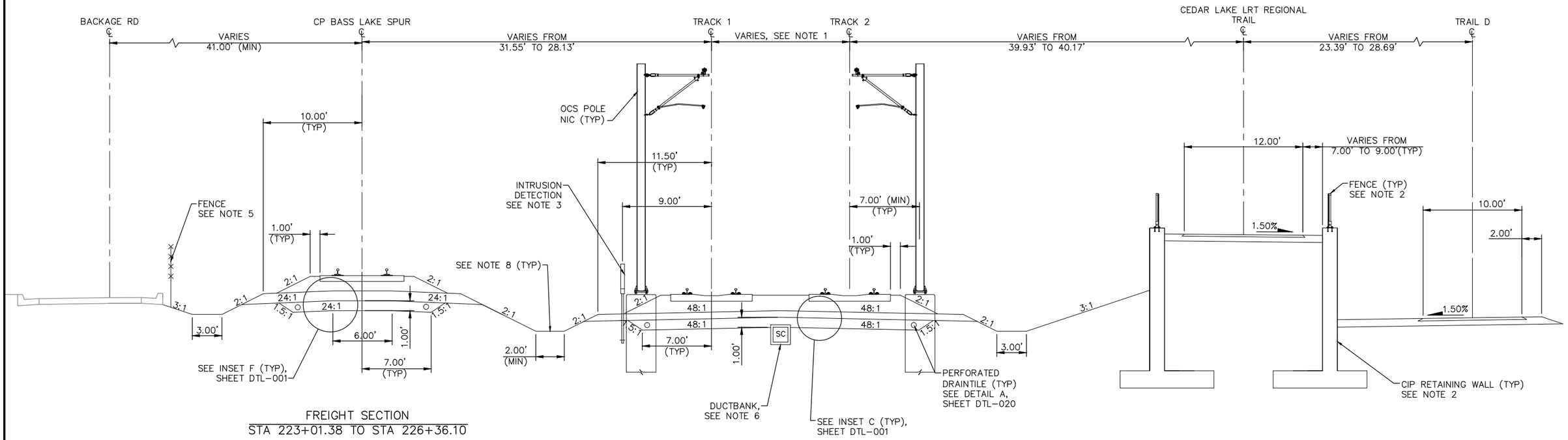

FREIGHT SECTION
STA 223+01.38 TO STA 226+36.10

TYPICAL SECTION
STA 2720+19.29 TO STA 2723+53.09

SCALE 0 2.5 5 10 IN FEET

NO.	DATE	BY	CHECK	DESIGN	REVISION / SUBMITTAL

AECOM

90% SUBMISSION - 01/22/16

METROPOLITAN COUNCIL

SOUTHWEST Green Line LRT Extension

CIVIL - VOLUME 3B
TRACK
TYPICAL SECTIONS

DISCIPLINE: TRACK

SHEET NAME: E2-TRK-TYP-044

SHEET 116 OF 420

Jan, 15 2016 12:01 pm V:\3400_ADC\CAD\00_EAST\PLANSHEETS\TRACK\E2-TRK-TYP.dwg By: V-RasulL

NOTES:
1. TRACK CENTERS NARROW FROM 20.00' TO 14.00' BETWEEN STA 2719+00.00 AND STA 2720+98.21.
2. SEE URBAN DESIGN PLANS FOR FENCE LOCATION AND DETAILS.
3. SEE SYSTEM PLANS FOR INTRUSION DETECTION DETAILS.
4. BALLAST CURB STARTS AT STA 2723+58.49 AND ENDS AT STA 2724+50.00.
5. SEE SYSTEM PLANS FOR DUCTBANK AND CABLE TROUGH DETAILS.
6. FOR DITCH INVERT AND DETAILS, SEE DRAINAGE PLANS.

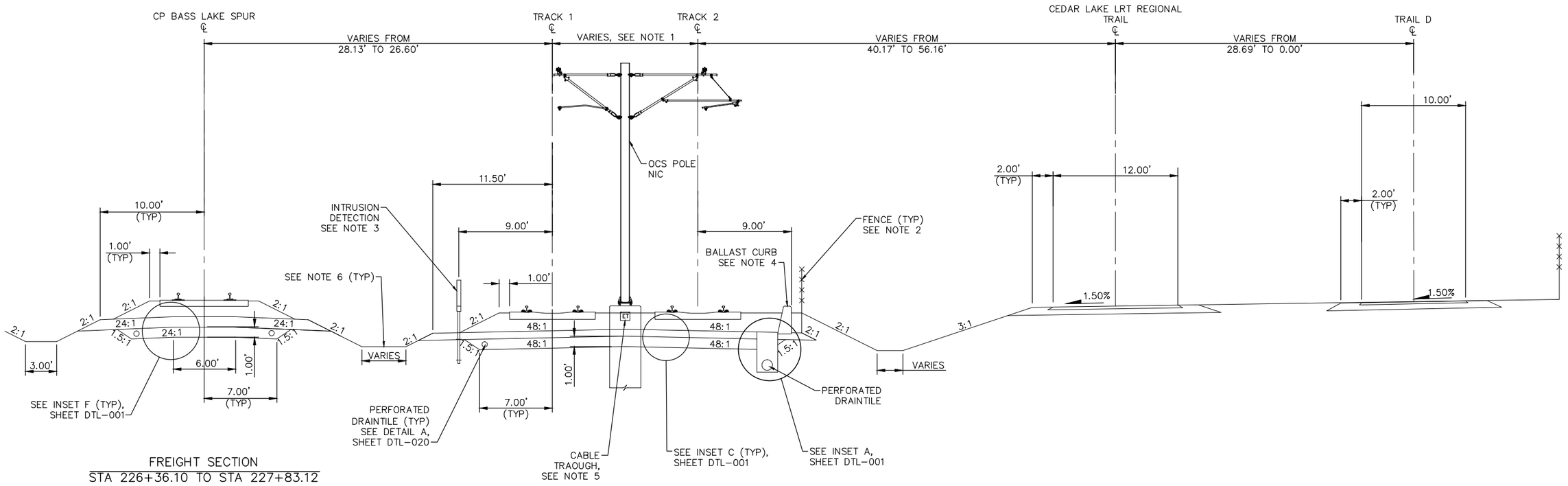

FREIGHT SECTION
STA 226+36.10 TO STA 227+83.12

TYPICAL SECTION
STA 2723+53.09 TO STA 2724+99.73

SCALE 0 2.5 5 10 IN FEET

NO.	DATE	BY	CHECK	DESIGN	REVISION / SUBMITTAL

AECOM

90% SUBMISSION - 01/22/16

METROPOLITAN COUNCIL

SOUTHWEST Green Line LRT Extension

CIVIL - VOLUME 3B
TRACK
TYPICAL SECTIONS

SHEET 117 OF 420

DISCIPLINE: TRACK

SHEET NAME: E2-TRK-TYP-045

Jan. 15 2016 12:01 pm V:\3400_ADC\CAD\00_EAST\PLANSHEETS\TRACK\E2-TRK-TYP.dwg By: V-RasulL

NOTES:
1. SEE URBAN DESIGN PLANS FOR FENCE LOCATION AND DETAILS.
2. SEE SYSTEM PLANS FOR INTRUSION DETECTION DETAILS.
3. FOR DITCH INVERT AND DETAILS, SEE DRAINAGE PLANS.
4. TRACK CENTERS VARY IN CURVE E2–211. SEE TRACK PLANS.
5. SEE SYSTEM PLANS FOR DUCTBANK AND CABLE TROUGH DETAILS.

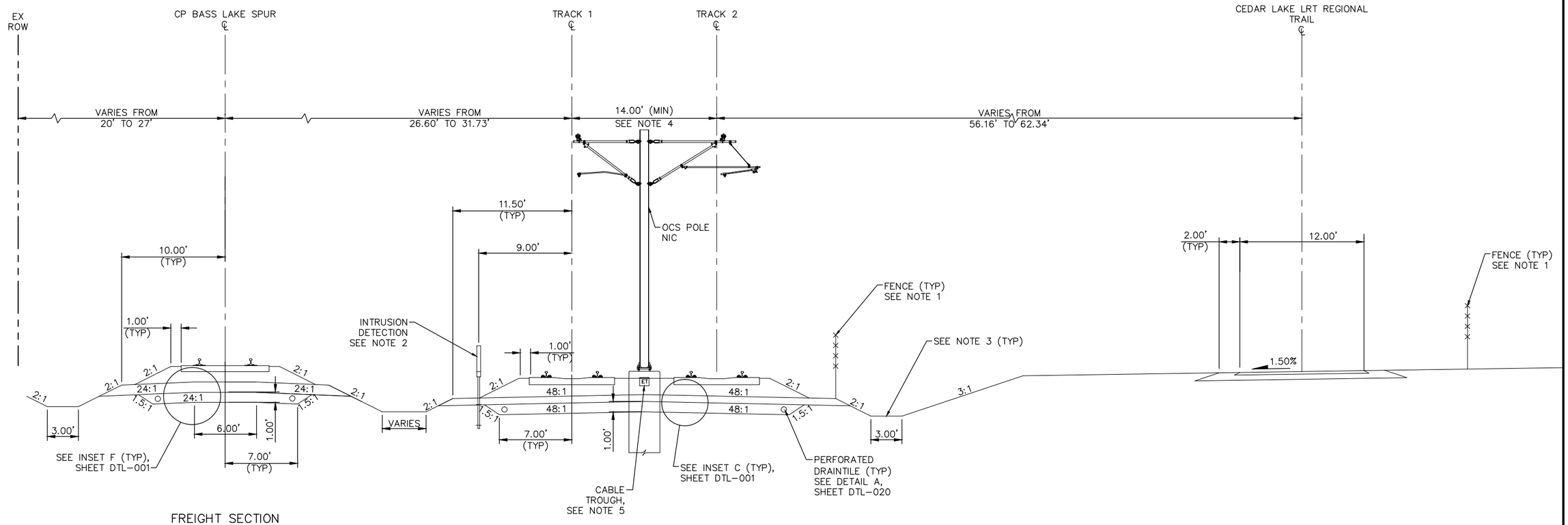

FREIGHT SECTION
STA 227+83.12 TO STA 231+40.34

TYPICAL SECTION
STA 2724+99.73 TO STA 2728+51.83

SCALE 0 2.5 5 10 IN FEET

NO.	DATE	BY	CHECK	DESIGN	REVISION / SUBMITTAL

AECOM

90% SUBMISSION - 01/22/16

METROPOLITAN COUNCIL

SOUTHWEST Green Line LRT Extension

CIVIL - VOLUME 3B
TRACK
TYPICAL SECTIONS

DISCIPLINE: TRACK

SHEET NAME: E2-TRK-TYP-046

SHEET 118 OF 420

Jan. 15 2016 12:01 pm V:\3400_ADC\CAD\00_EAST\PLANSHEETS\TRACK\E2-TRK-TYP.dwg By: V-RasulL

NOTES:
1. SEE RETAINING WALL PLANS FOR DETAILS.
2. SEE SYSTEM PLANS FOR INTRUSION DETECTION DETAILS.
3. FOR DITCH INVERT AND DETAILS, SEE DRAINAGE PLANS.
4. TRACK CENTERS VARY IN CURVE E2-211. SEE TRACK PLANS.
5. SEE SYSTEM PLANS FOR DUCTBANK AND CABLE TROUGH DETAILS.
6. SEE URBAN DESIGN PLANS FOR FENCE LOCATION AND DETAILS.

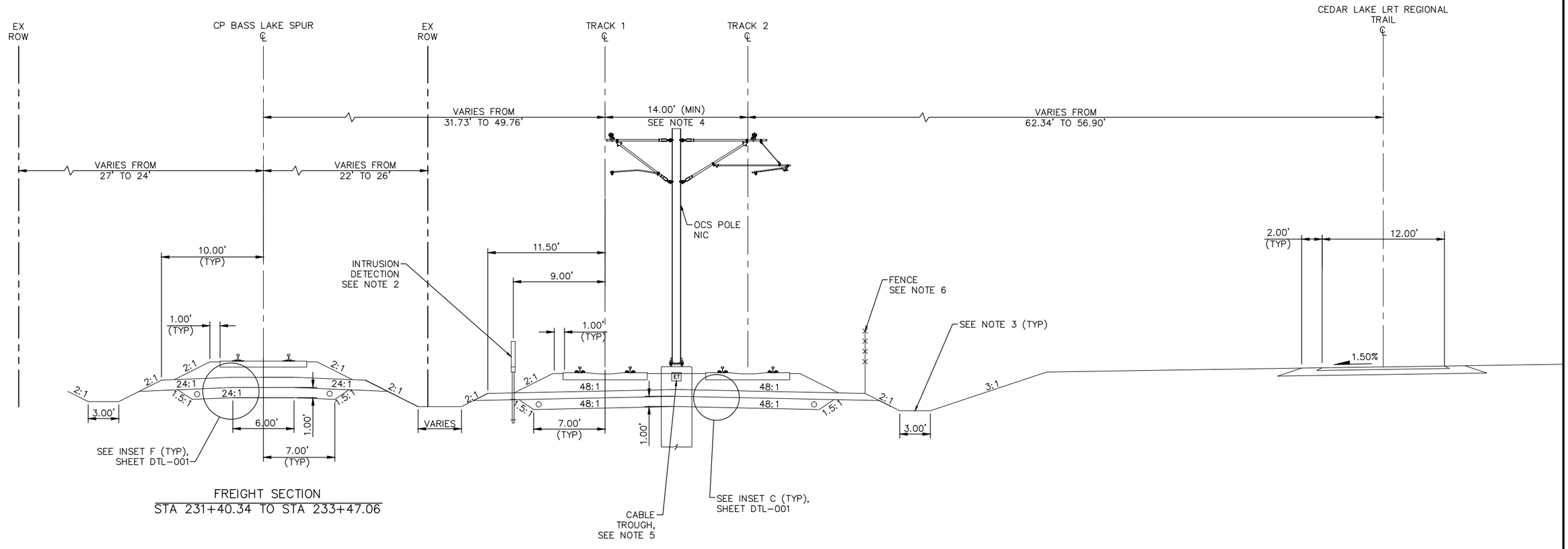

FREIGHT SECTION
STA 231+40.34 TO STA 233+47.06

TYPICAL SECTION
STA 2728+51.83 TO STA 2730+53.84

SCALE 0 2.5 5 10 IN FEET

NO.	DATE	BY	CHECK	DESIGN	REVISION / SUBMITTAL

AECOM

90% SUBMISSION - 01/22/16

METROPOLITAN COUNCIL

SOUTHWEST Green Line LRT Extension

CIVIL - VOLUME 3B
TRACK
TYPICAL SECTIONS

DISCIPLINE: TRACK

SHEET NAME: E2-TRK-TYP-047

SHEET 119 OF 420

Jan, 15 2016 12:02 pm V:\3400_ADC\CAD\00_EAST\PLANSHEETS\TRACK\E2-TRK-TYP.dwg By: V-RasulL

NOTES:
1. SEE RETAINING WALL PLANS FOR DETAILS.
2. FOR DITCH INVERT AND DETAILS, SEE DRAINAGE PLANS.
3. TRACK CENTERS VARY IN CURVE E2–211. SEE TRACK PLANS.
4. SEE SYSTEM PLANS FOR DUCTBANK AND CABLE TROUGH DETAILS.
5. SEE URBAN DESIGN PLANS FOR FENCE LOCATION AND DETAILS.

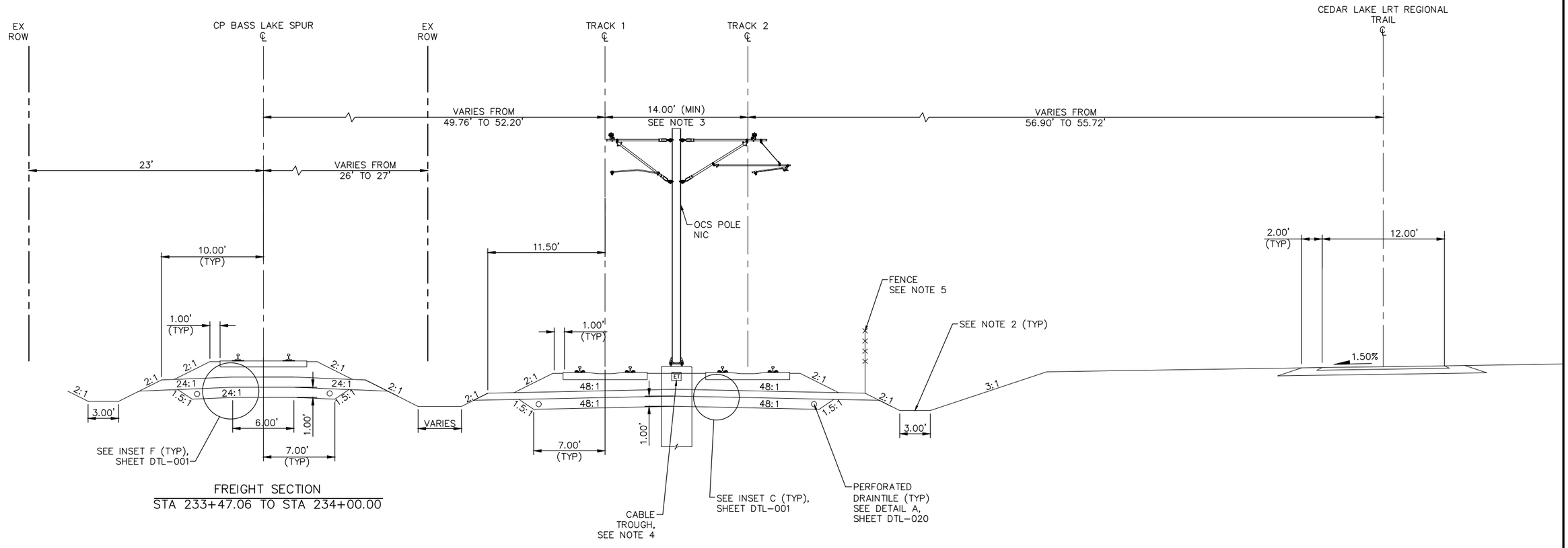

FREIGHT SECTION
STA 233+47.06 TO STA 234+00.00

TYPICAL SECTION
STA 2730+53.84 TO STA 2731+05.50

SCALE 0 2.5 5 10 IN FEET

NO.	DATE	BY	CHECK	DESIGN	REVISION / SUBMITTAL

AECOM

90% SUBMISSION - 01/22/16

METROPOLITAN COUNCIL

SOUTHWEST Green Line LRT Extension

CIVIL - VOLUME 3B
TRACK
TYPICAL SECTIONS

DISCIPLINE: TRACK

SHEET NAME: E2-TRK-TYP-048

SHEET 120 OF 420

Jan, 15 2016 12:02 pm V:\3400_ADC\CAD\00_EAST\PLANSHEETS\TRACK\E2-TRK-TYP.dwg By: V-RasulL

NOTES:
1. TRACK CENTERS VARY IN CURVE E2–211. SEE TRACK PLANS.
2. FOR DITCH INVERT AND DETAILS, SEE DRAINAGE PLANS.
3. SEE SYSTEM PLANS FOR DUCTBANK AND CABLE TROUGH DETAILS.
4. SEE URBAN DESIGN PLANS FOR FENCE LOCATION AND DETAILS.

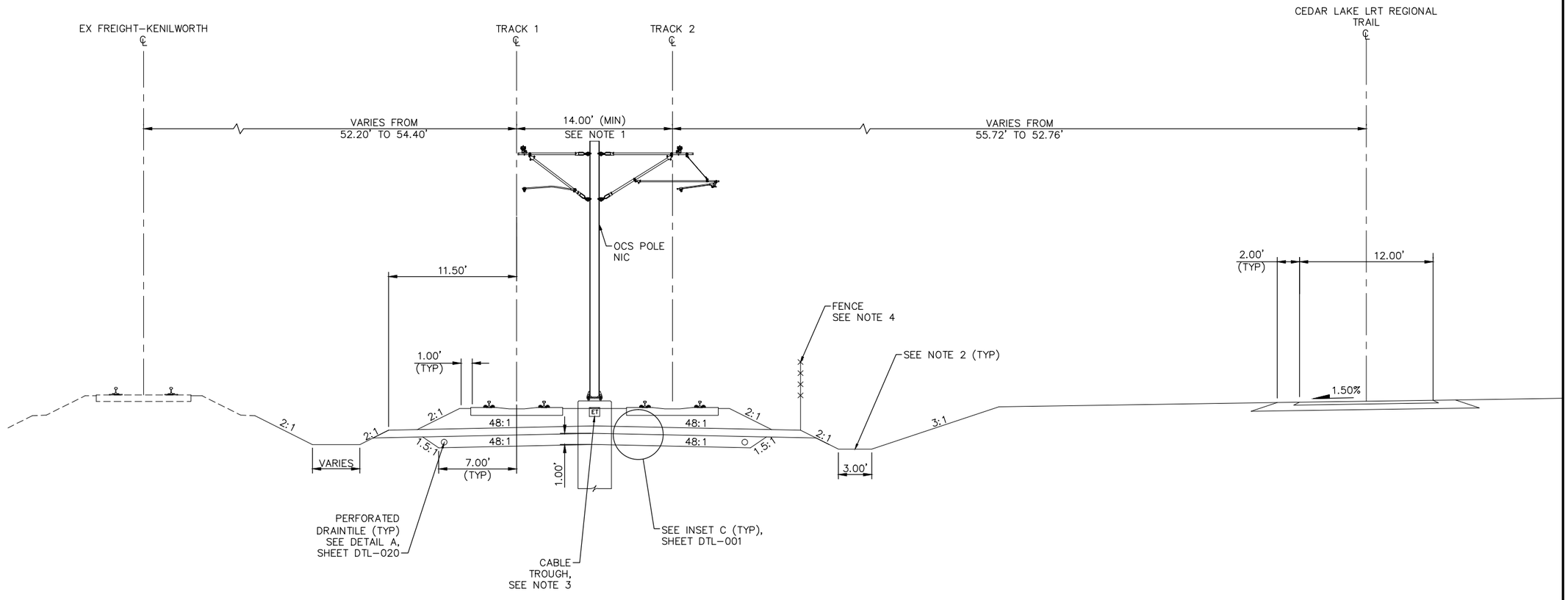

TYPICAL SECTION
STA 2731+05.50 TO STA 2732+00.00

SCALE 0 2.5 5 10 IN FEET

NO.	DATE	BY	CHECK	DESIGN	REVISION / SUBMITTAL

AECOM

90% SUBMISSION - 01/22/16

METROPOLITAN COUNCIL

SOUTHWEST Green Line LRT Extension

CIVIL - VOLUME 3B
TRACK
TYPICAL SECTIONS

DISCIPLINE: TRACK

SHEET NAME: E2-TRK-TYP-049

SHEET 121 OF 420

Jan, 15 2016 12:02 pm v:\3400_ADC\CAD\00_EAST\PLANSHEETS\TRACK\E2-TRK-TYP.dwg By: V-RasulL

NOTES:
1. SEE URBAN DESIGN PLANS FOR FENCE LOCATION AND DETAILS.
2. FOR DITCH INVERT AND DETAILS, SEE DRAINAGE PLANS.
3. TRACK CENTERS VARY IN CURVE E2–211. SEE TRACK PLANS.
4. SEE SYSTEM PLANS FOR DUCTBANK AND CABLE TROUGH DETAILS.

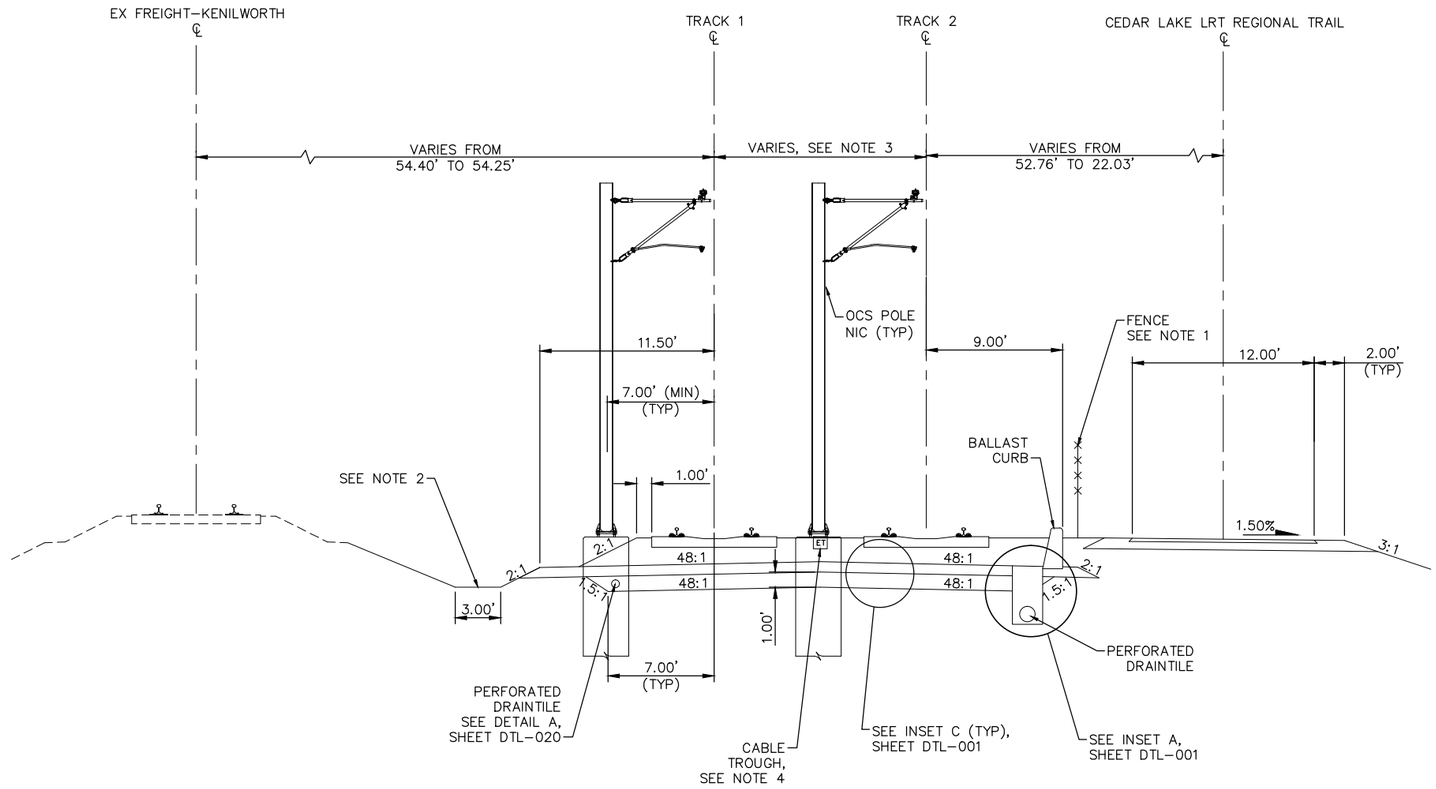

TYPICAL SECTION
STA 2732+00.00 TO STA 2733+59.02

SCALE 0 2.5 5 10 IN FEET

NO.	DATE	BY	CHECK	DESIGN	REVISION / SUBMITTAL

AECOM

90% SUBMISSION - 01/22/16

METROPOLITAN COUNCIL

SOUTHWEST Green Line LRT Extension

CIVIL - VOLUME 3B
TRACK
TYPICAL SECTIONS

DISCIPLINE: TRACK

SHEET NAME: E2-TRK-TYP-050

SHEET 122 OF 420

Jan, 15 2016 12:03 pm V:\3400_ADC\CAD\00_EAST\PLANSHEETS\TRACK\E2-TRK-TYP.dwg By: V-RasulL

NOTES:
1. SEE URBAN DESIGN PLANS FOR FENCE LOCATION AND DETAILS.
2. FOR DITCH INVERT AND DETAILS, SEE DRAINAGE PLANS.
3. TRACK CENTERS VARY IN CURVE E2–211. SEE TRACK PLANS.
4. SEE SYSTEM PLANS FOR DUCTBANK AND CABLE TROUGH DETAILS.
5. SEE SYSTEM PLANS FOR INTRUSION DETECTION DETAILS.

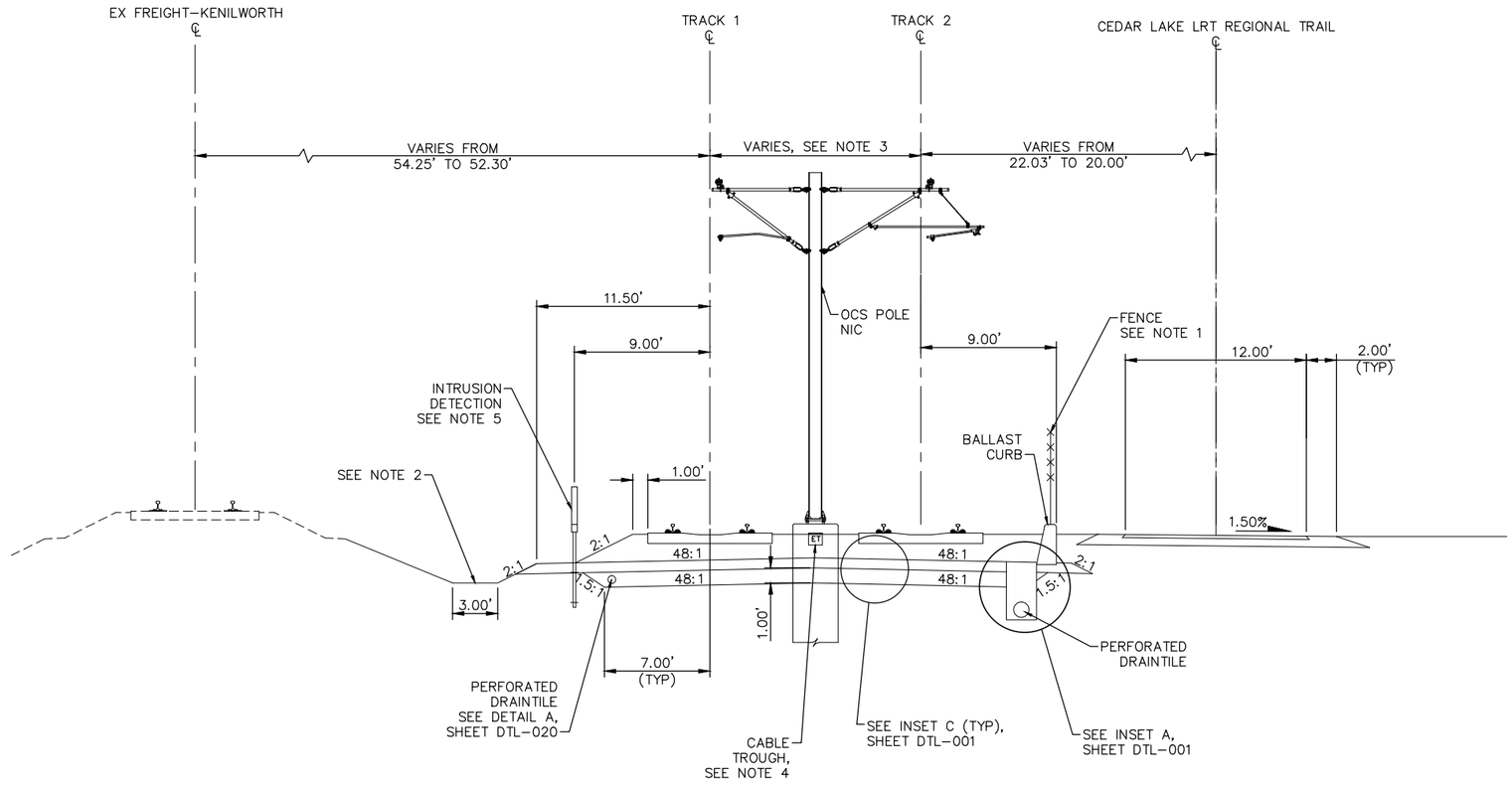

TYPICAL SECTION
STA 2733+59.02 TO STA 2734+74.64

SCALE 0 2.5 5 10 IN FEET

NO.	DATE	BY	CHECK	DESIGN	REVISION / SUBMITTAL

AECOM

90% SUBMISSION - 01/22/16

METROPOLITAN COUNCIL

SOUTHWEST Green Line LRT Extension

CIVIL - VOLUME 3B
TRACK
TYPICAL SECTIONS

DISCIPLINE: TRACK

SHEET NAME: E2-TRK-TYP-051

SHEET 123 OF 420

Jan. 15 2016 12:03 pm V:\3400_ADC\CAD\00_EAST\PLANSHEETS\TRACK\E2-TRK-TYP.dwg By: V-RasulL

NOTES:
1. SEE URBAN DESIGN PLANS FOR FENCE LOCATION AND DETAILS.
2. FOR DITCH INVERT AND DETAILS, SEE DRAINAGE PLANS.
3. TRACK CENTERS VARY IN CURVE E2–211. SEE TRACK PLANS.
4. SEE SYSTEM PLANS FOR DUCTBANK AND CABLE TROUGH DETAILS.
5. SEE SYSTEM PLANS FOR INTRUSION DETECTION DETAILS.

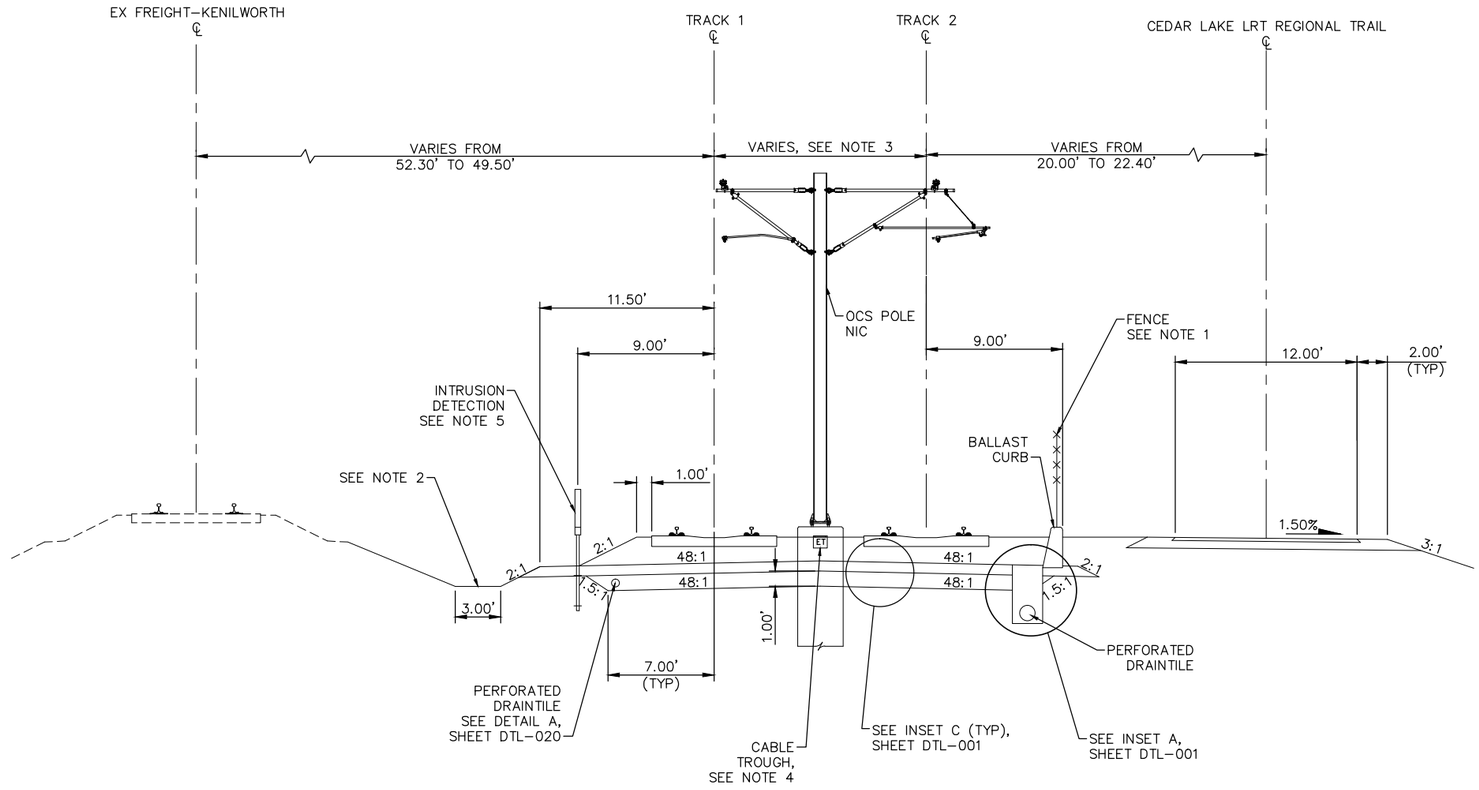

TYPICAL SECTION
STA 2734+74.64 TO STA BACK 2735+52.41 (= STA AHEAD 2746+00.00)

SCALE 0 2.5 5 10 IN FEET

NO.	DATE	BY	CHECK	DESIGN	REVISION / SUBMITTAL

AECOM

90% SUBMISSION - 01/22/16

METROPOLITAN COUNCIL

SOUTHWEST Green Line LRT Extension

CIVIL - VOLUME 3B
TRACK
TYPICAL SECTIONS

DISCIPLINE: TRACK

SHEET NAME: E2-TRK-TYP-052

SHEET 124 OF 420

Jan, 15 2016 12:03 pm V:\3400_ADC\CAD\00_EAST\PLANSHEETS\TRACK\E2-TRK-TYP.dwg By: V-RasulL

NOTES:
1. MnDOT BRIDGE R0691. SEE STRUCTURAL PLANS.
2. FOR GUARD RAIL LIMITS SEE TRACK CHARTS.

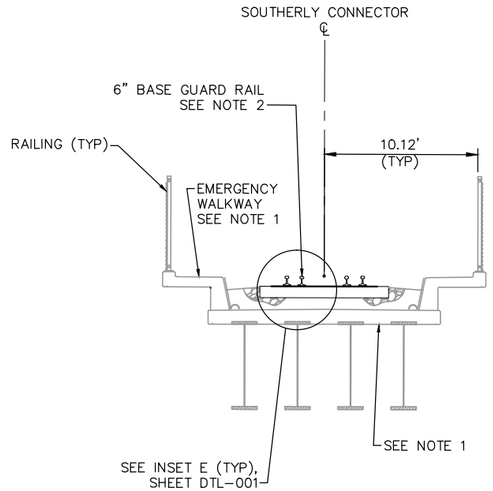

LRT REGIONAL TRAIL

FREIGHT SECTION
STA 146+10.10 TO STA 147+99.70

SCALE 0 2.5 5 10 IN FEET

NO.	DATE	BY	CHECK	DESIGN	REVISION / SUBMITTAL

AECOM

90% SUBMISSION - 01/22/16

METROPOLITAN COUNCIL

SOUTHWEST Green Line LRT Extension

CIVIL - VOLUME 3B
TRACK
TYPICAL SECTIONS

DISCIPLINE: TRACK

SHEET NAME: E2-TRK-TYP-053

SHEET 125 OF 420

Jan, 15 2016 12:04 pm V:\3400_ADC\CAD\00_EAST\PLANSHEETS\TRACK\E2-TRK-TYP.dwg By: V-RasulL

NOTES:
1. SEE RETAINING WALL PLANS FOR DETAILS.
2. FOR GUARD RAIL LIMITS SEE TRACK CHARTS.
3. SEE RETAINING WALL PLANS FOR LOAD TRANSFER PLATFORM DETAILS.
4. SEE URBAN DESIGN PLANS FOR FENCE LOCATION AND DETAILS.

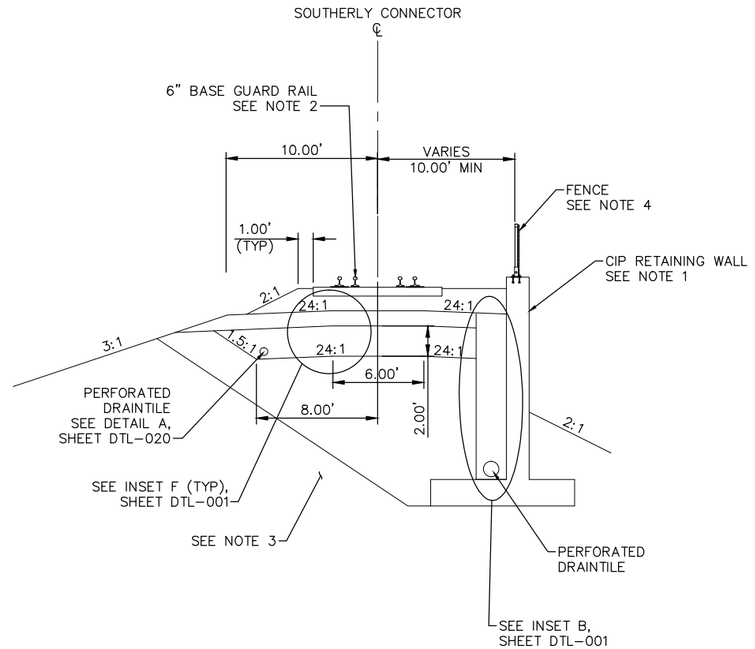

FREIGHT SECTION
STA 147+99.70 TO STA 150+21.02

SCALE 0 2.5 5 10 IN FEET

NO.	DATE	BY	CHECK	DESIGN	REVISION / SUBMITTAL

AECOM

90% SUBMISSION - 01/22/16

METROPOLITAN COUNCIL

SOUTHWEST Green Line LRT Extension

CIVIL - VOLUME 3B
TRACK
TYPICAL SECTIONS

SHEET 126 OF 420

DISCIPLINE: TRACK

SHEET NAME: E2-TRK-TYP-054

Jan, 15 2016 12:04 pm V:\3400_ADC\CAD\00_EAST\PLANSHEETS\TRACK\E2-TRK-TYP.dwg By: V-RasulL

NOTES:
1. MnDOT BRIDGE 27C14. SEE STRUCTURAL PLANS.
2. FOR GUARD RAIL LIMITS SEE TRACK CHARTS.

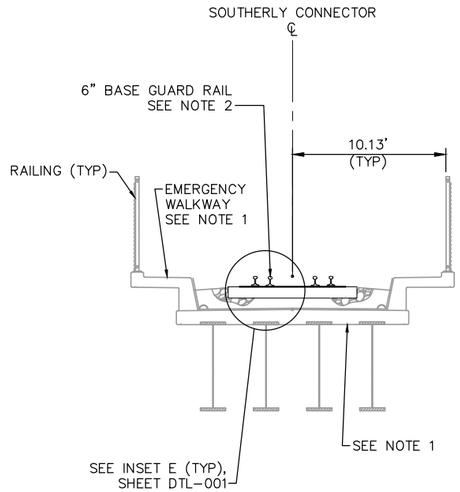

OXFORD STREET

FREIGHT SECTION
STA 150+21.02 TO STA 151+28.15

SCALE 0 2.5 5 10 IN FEET

NO.	DATE	BY	CHECK	DESIGN	REVISION / SUBMITTAL

AECOM

90% SUBMISSION - 01/22/16

METROPOLITAN COUNCIL

SOUTHWEST Green Line LRT Extension

CIVIL - VOLUME 3B
TRACK
TYPICAL SECTIONS

DISCIPLINE: TRACK

SHEET NAME: E2-TRK-TYP-055

SHEET 127 OF 420

Jan. 15 2016 12:04 pm V:\3400_ADC\CAD\00_EAST\PLANSHEETS\TRACK\E2-TRK-TYP.dwg By: V-RasulL

NOTES:
1. SEE RETAINING WALL PLANS FOR DETAILS.
2. FOR GUARD RAIL LIMITS SEE TRACK CHARTS.
3. FOR DITCH INVERT AND DETAILS, SEE DRAINAGE PLANS.
4. SEE URBAN DESIGN PLANS FOR FENCE LOCATION AND DETAILS.

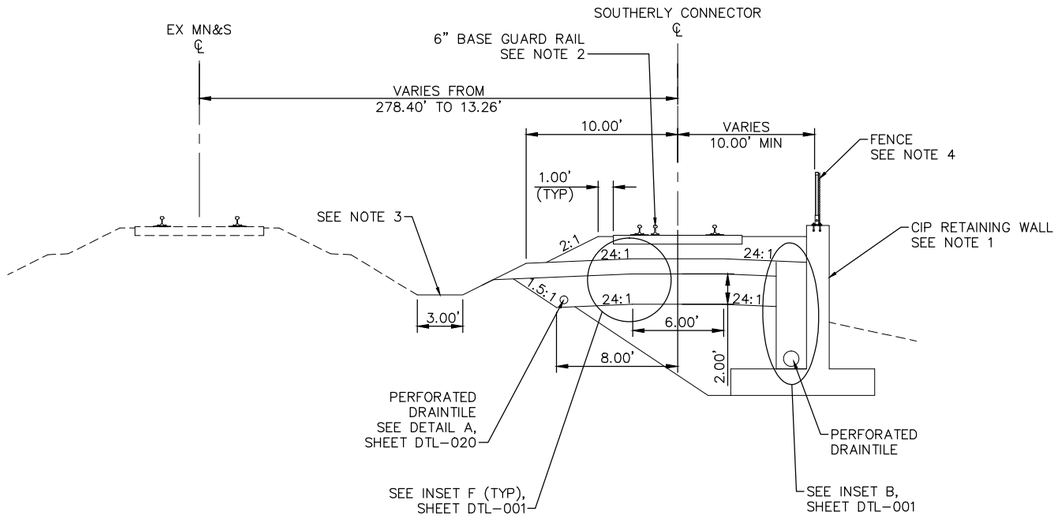

FREIGHT SECTION
STA 151+28.15 TO STA 158+48.62

0 2.5 5 10
SCALE IN FEET

NO.	DATE	BY	CHECK	DESIGN	REVISION / SUBMITTAL

AECOM

90% SUBMISSION - 01/22/16

METROPOLITAN COUNCIL

SOUTHWEST Green Line LRT Extension

CIVIL - VOLUME 3B
TRACK
TYPICAL SECTIONS

DISCIPLINE: TRACK

SHEET NAME: E2-TRK-TYP-056

SHEET 128 OF 420

Jan, 15 2016 12:05 pm V:\3400_ADC\CAD\00_EAST\PLANSHEETS\TRACK\E2-TRK-TYP.dwg By: V-RasulL

NOTES:
1. SPECIAL TRACKWORK IS NOT ILLUSTRATED.
2. FOR DITCH INVERT AND DETAILS, SEE DRAINAGE PLANS.
3. SELECT GRANULAR DEPTH: STA 158+48.62: 2.00'; STA 158+49.00 TO STA 160+83.67: 1.00'. TRANSITION LINEARLY BETWEEN STA 158+48.62 AND STA 158+49.00.
4. TRANSITION FROM 8.00' TO 7.00' BETWEEN STA 158+48.62 AND STA 158+49.00.

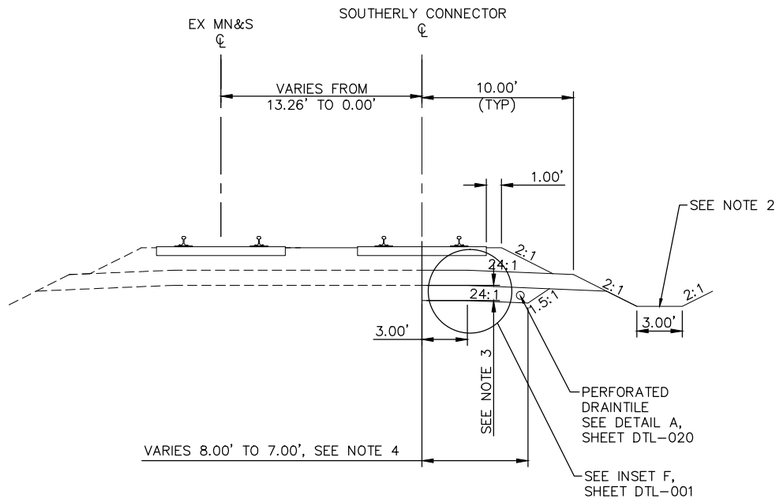

FREIGHT SECTION
STA 158+48.62 TO STA 160+83.67

SCALE 0 2.5 5 10 IN FEET

NO.	DATE	BY	CHECK	DESIGN	REVISION / SUBMITTAL

AECOM

90% SUBMISSION - 01/22/16

METROPOLITAN COUNCIL

SOUTHWEST Green Line LRT Extension

CIVIL - VOLUME 3B
TRACK
TYPICAL SECTIONS

DISCIPLINE: TRACK

SHEET NAME: E2-TRK-TYP-057

SHEET 129 OF 420

Jan, 15 2016 12:05 pm v:\3400_ADC\CAD\00_EAST\PLANSHEETS\TRACK\E2-TRK-TYP.dwg By: V-RasulL

NOTES:
1. TRACK CENTERS WIDEN FROM 14.00' TO 14.82' BETWEEN STA 2748+98.18 AND STA 2753+50.00 .
2. SEE SYSTEM PLANS FOR INTRUSION DETECTION DETAILS.
3. FOR DITCH INVERT AND DETAILS, SEE DRAINAGE PLANS.
4. SEE SYSTEMS PLANS FOR DUCTBANK AND CABLE TROUGH DETAILS.
5. SEE URBAN DESIGN PLANS FOR FENCE LOCATION AND DETAILS.
6. BALLAST CURB AND PERFORATED DRAINTILE ENDS AT STA 2746+80.00.

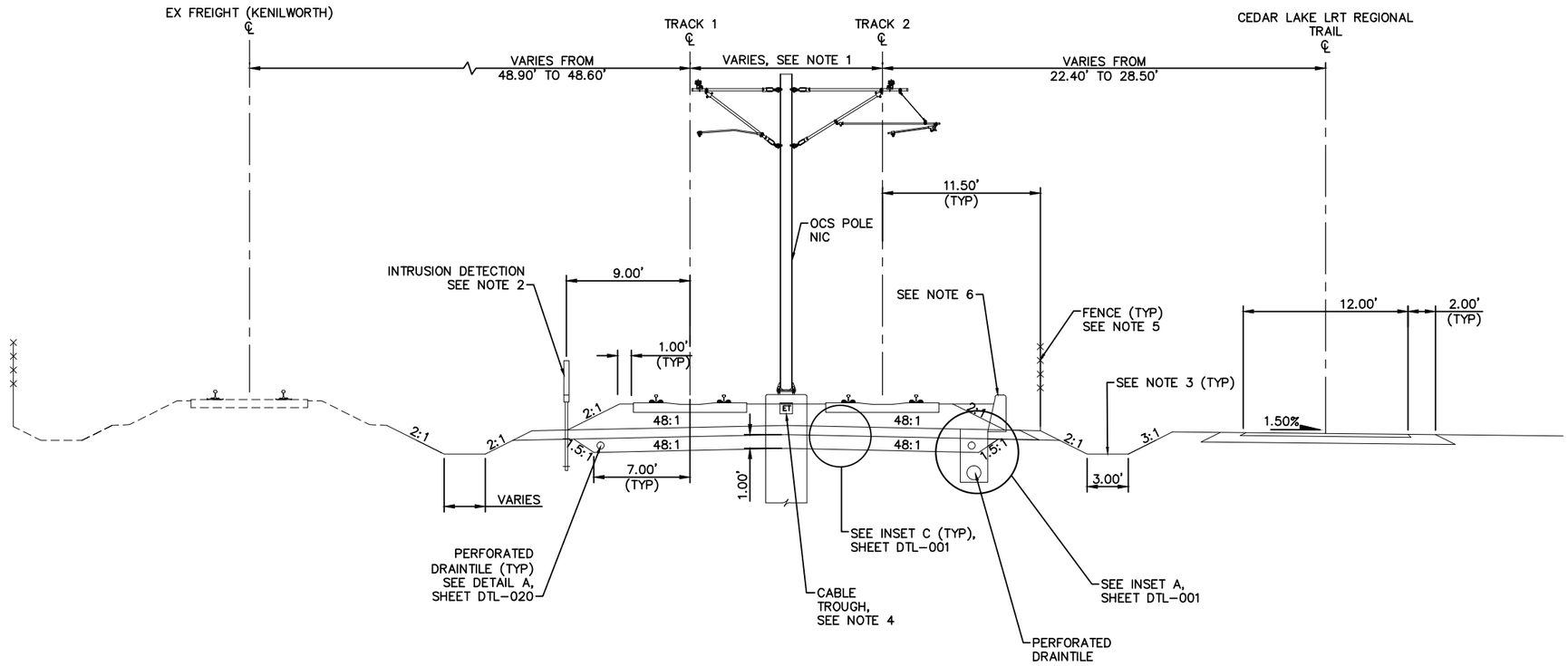

TYPICAL SECTION
STA AHEAD 2746+00.00 (=STA BACK 2735+52.41) TO STA 2753+50.00

SCALE 0 2.5 5 10 IN FEET

NO.	DATE	BY	CHECK	DESIGN	REVISION / SUBMITTAL

AECOM

90% SUBMISSION - 01/22/16

METROPOLITAN COUNCIL

SOUTHWEST Green Line LRT Extension

CIVIL - VOLUME 3B
TRACK
TYPICAL SECTIONS

DISCIPLINE: TRACK

SHEET NAME: E3-TRK-TYP - 001

SHEET 130 OF 420

Jan, 18 2016 07:31 am V:\3400_ADC\CAD\00_EAST\PLANSHEETS\TRACK\E3-TRK-TYP.dwg By: V-RasulL

NOTES:
1. TRACK CENTERS WIDEN FROM 14.82' TO 17.83' BETWEEN STA 2753+50.00 AND STA 2760+77.23 .
2. SEE SYSTEM PLANS FOR INTRUSION DETECTION DETAILS.
3. FOR DITCH INVERT AND DETAILS, SEE DRAINAGE PLANS.
4. SEE SYSTEMS PLANS FOR DUCTBANK AND CABLE TROUGH DETAILS.
5. SEE URBAN DESIGN PLANS FOR FENCE LOCATION AND DETAILS.

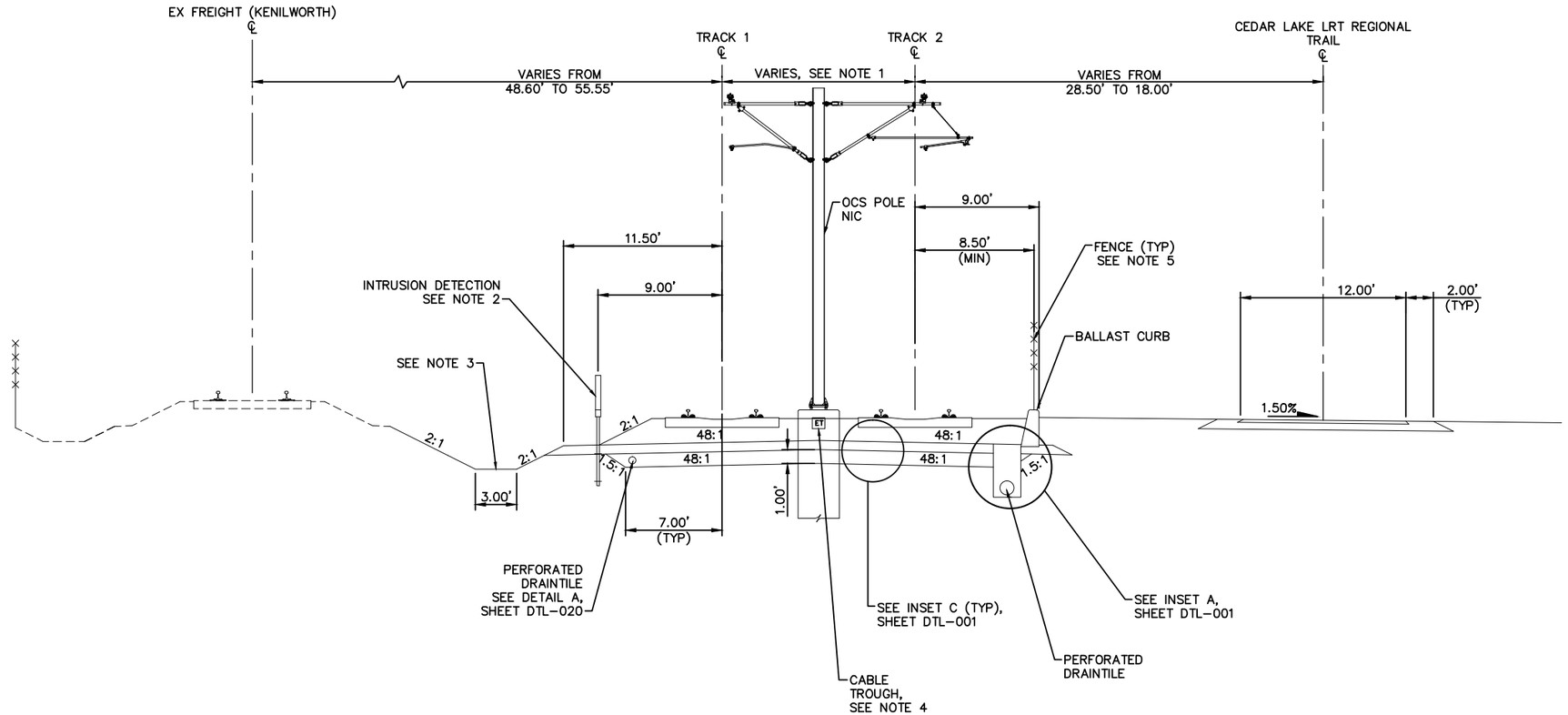

TYPICAL SECTION
STA 2753+50.00 TO STA 2760+77.23

SCALE 0 2.5 5 10 IN FEET

NO.	DATE	BY	CHECK	DESIGN	REVISION / SUBMITTAL

AECOM

90% SUBMISSION - 01/22/16

METROPOLITAN COUNCIL

SOUTHWEST Green Line LRT Extension

CIVIL - VOLUME 3B
TRACK
TYPICAL SECTIONS

DISCIPLINE: TRACK

SHEET NAME: E3-TRK-TYP - 002

SHEET 131 OF 420

Jan, 18 2016 07:32 am V:\3400_ADC\CAD\00_EAST\PLANSHEETS\TRACK\E3-TRK-TYP.dwg By: V-RasulL

NOTES:
1. TRACK CENTERS WIDEN FROM 17.83' TO 20.00' BETWEEN STA 2760+77.23 AND STA 2761+33.64.
2. SEE SYSTEM PLANS FOR INTRUSION DETECTION DETAILS.
3. FOR DITCH INVERT AND DETAILS, SEE DRAINAGE PLANS.
4. SEE SYSTEMS PLANS FOR DUCTBANK AND CABLE TROUGH DETAILS.
5. SEE URBAN DESIGN PLANS FOR FENCE LOCATION AND DETAILS.

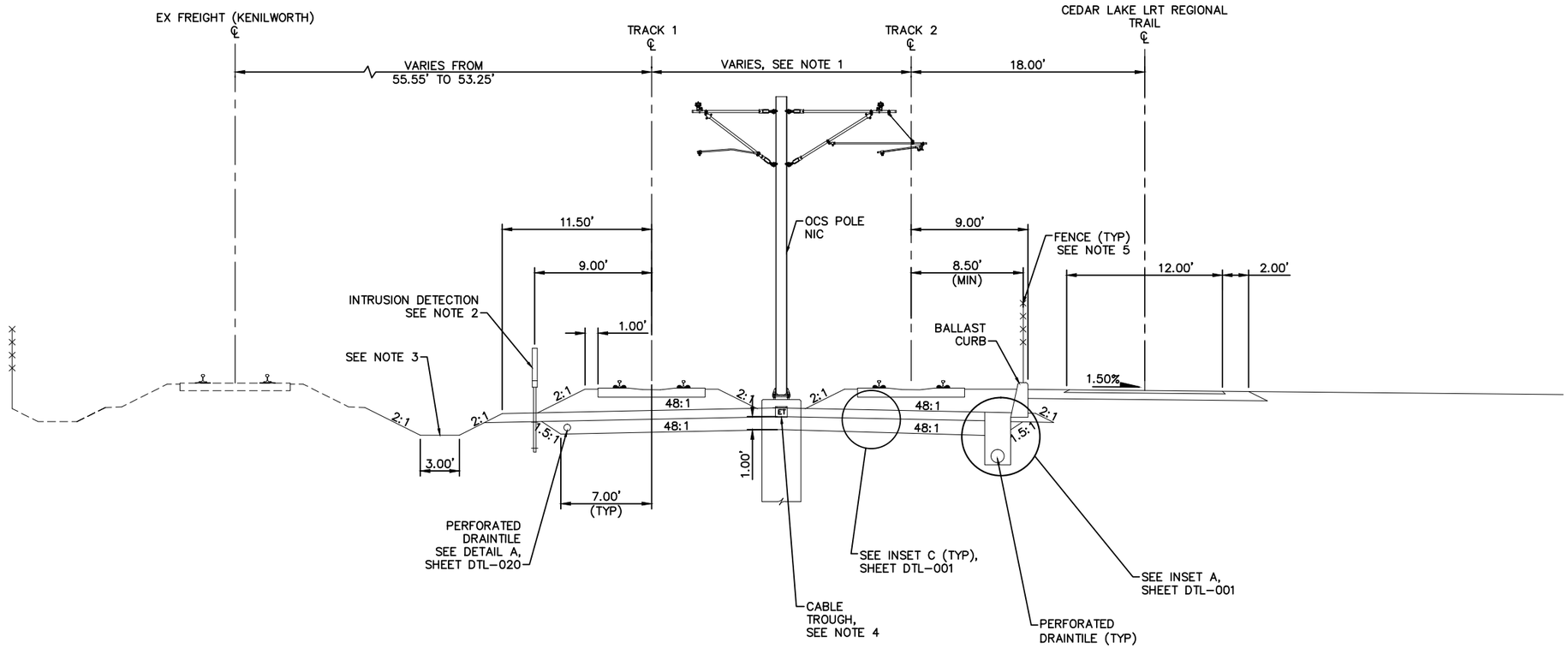

TYPICAL SECTION
STA 2760+77.23 TO STA 2761+33.64

SCALE 0 2.5 5 10 IN FEET

NO.	DATE	BY	CHECK	DESIGN	REVISION / SUBMITTAL

AECOM

90% SUBMISSION - 01/22/16

METROPOLITAN COUNCIL

SOUTHWEST Green Line LRT Extension

CIVIL - VOLUME 3B
TRACK
TYPICAL SECTIONS

DISCIPLINE: TRACK

SHEET NAME: E3-TRK-TYP - 003

SHEET 132 OF 420

Jan, 18 2016 07:32 am V:\3400_ADC\CAD\00_EAST\PLANSHEETS\TRACK\E3-TRK-TYP.dwg By: V-RasulL

NOTES:

1. TRACK CENTERS WIDEN FROM 20.00' TO 30.38' BETWEEN STA 2761+33.64 AND STA 2764+29.35.
2. SEE SYSTEM PLANS FOR INTRUSION DETECTION DETAILS.
3. BALLAST CURB FOR FUTURE PEDESTRIAN PATH NOT ILLUSTRATED. SEE PLAN SHEET.
4. SELECT GRANULAR DEPTH: STA 2761+33.64 TO STA 2765+65.00: 1.00'; STA 2765+95.03: 2.50'. TRANSITION LINEARLY BETWEEN STA 2765+65.00 AND STA 2765+95.03.
5. TRANSITION FROM 7.00' TO 8.50' BETWEEN STA 2765+65.00 AND STA 2765+95.03.
6. SEE URBAN DESIGN PLANS FOR FENCE LOCATION AND DETAILS.
7. FOR DITCH INVERT AND DETAILS, SEE DRAINAGE PLANS.
8. SEE SYSTEMS PLANS FOR DUCTBANK AND CABLE TROUGH DETAILS.
9. FUTURE PEDESTRIAN CROSSING AND PROPOSED AT-GRADE PEDESTRIAN CROSSING PANELS NOT DEPICTED. SEE TRACK PLANS AND DETAILS.

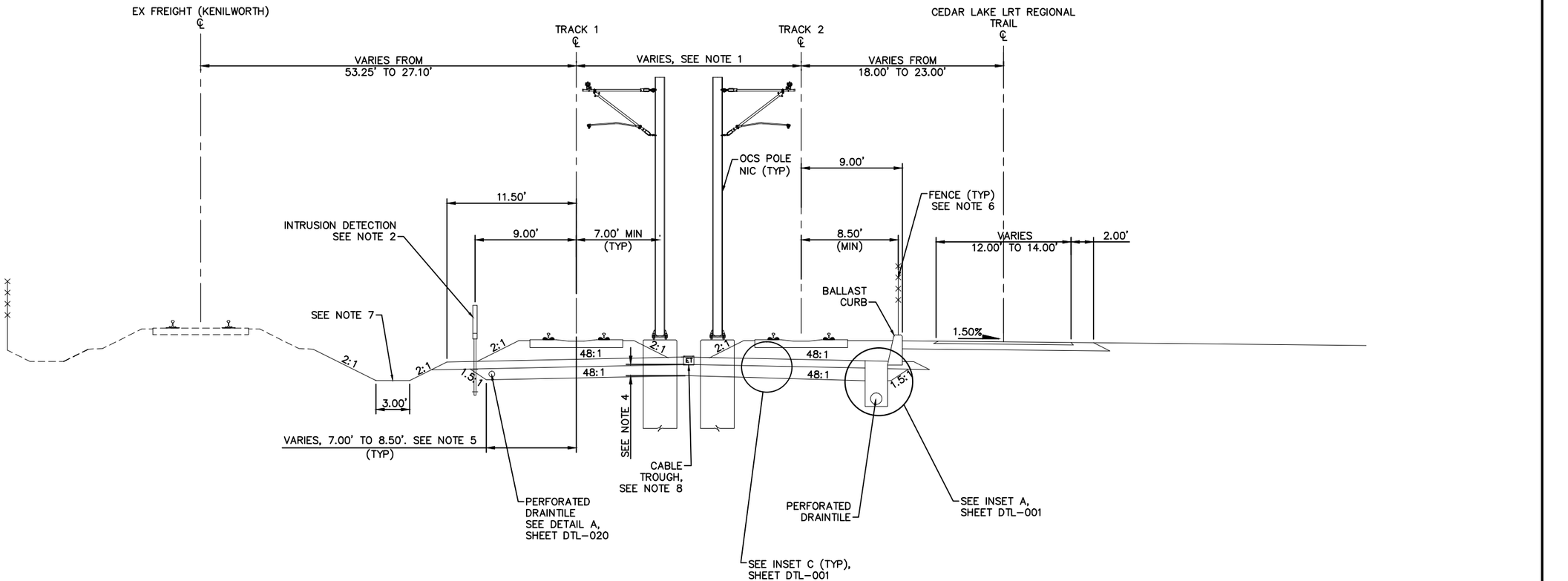

TYPICAL SECTION
STA 2761+33.64 TO STA 2765+95.03

SCALE 0 2.5 5 10 IN FEET

NO.	DATE	BY	CHECK	DESIGN	REVISION / SUBMITTAL

AECOM

90% SUBMISSION - 01/22/16

METROPOLITAN COUNCIL

SOUTHWEST Green Line LRT Extension

CIVIL - VOLUME 3B
TRACK
TYPICAL SECTIONS

DISCIPLINE: TRACK

SHEET NAME: E3-TRK-TYP - 004

SHEET 133 OF 420

Jan, 18 2016 07:32 am v:\3400_ADC\CAD\00_EAST\PLANSHEETS\TRACK\E3-TRK-TYP.dwg By: V-RasulL

NOTES:
1. SEE STATION PLANS FOR STATION PLATFORM DETAILS.
2. SEE SYSTEM PLANS FOR INTRUSION DETECTION DETAILS.
3. SEE SOIL CORRECTION TABLE FOR DETAILS.
4. FOR DITCH INVERT AND DETAILS, SEE DRAINAGE PLANS.
5. SEE SYSTEMS PLANS FOR DUCTBANK AND CABLE TROUGH DETAILS.
6. SEE URBAN DESIGN PLANS FOR FENCE LOCATION AND DETAILS.

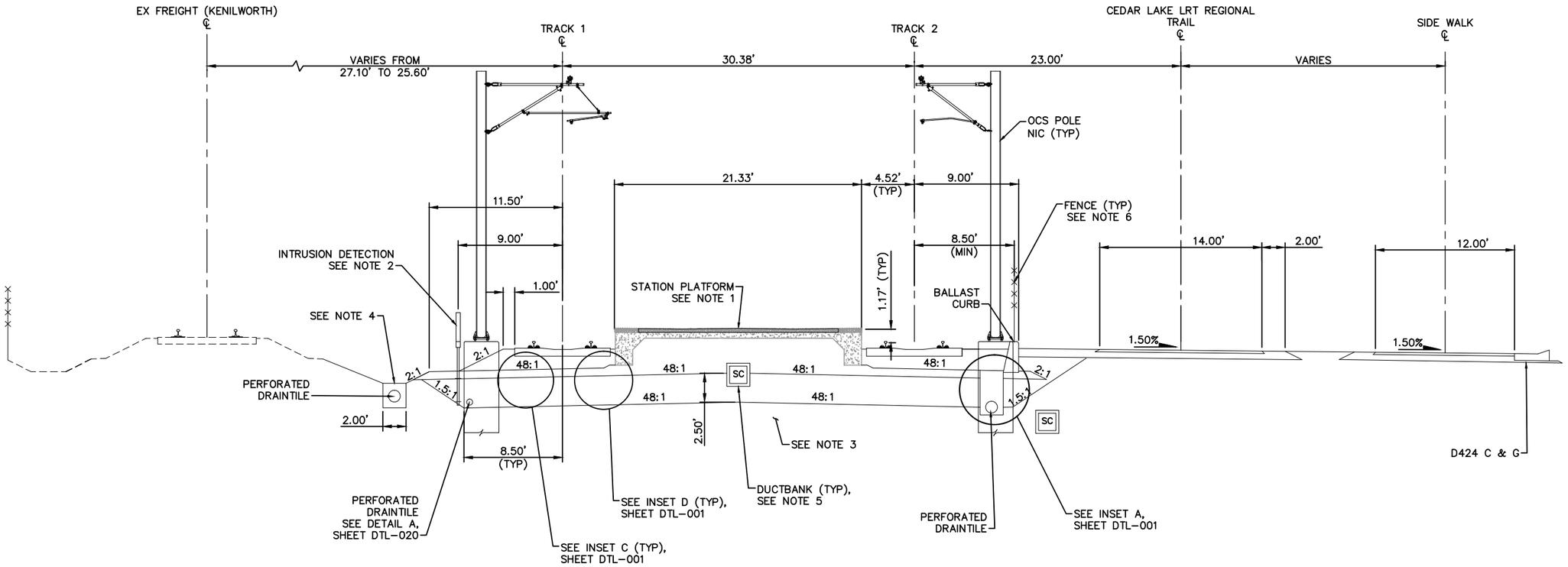

TYPICAL SECTION – WEST LAKE STATION
STA 2765+95.03 TO STA 2768+65.03

SCALE 0 2.5 5 10 IN FEET

NO.	DATE	BY	CHECK	DESIGN	REVISION / SUBMITTAL

AECOM

90% SUBMISSION - 01/22/16

METROPOLITAN COUNCIL

SOUTHWEST Green Line LRT Extension

CIVIL - VOLUME 3B
TRACK
TYPICAL SECTIONS

DISCIPLINE: TRACK

SHEET NAME: E3-TRK-TYP - 005

SHEET 134 OF 420

Jan, 18 2016 07:33 am v:\3400_ADC\CAD\00_EAST\PLANSHEETS\TRACK\E3-TRK-TYP.dwg By: V-RasulL

NOTES:
1. SEE SYSTEM PLANS FOR INTRUSION DETECTION DETAILS.
2. SEE SOIL CORRECTION TABLE FOR DETAILS.
3. FOR DITCH INVERT AND DETAILS, SEE DRAINAGE PLANS.
4. SEE SYSTEMS PLANS FOR DUCTBANK AND CABLE TROUGH DETAILS.
5. SEE URBAN DESIGN PLANS FOR FENCE LOCATION AND DETAILS.
6. AT-GRADE PEDESTRIAN CROSSING PANEL NOT DEPICTED. SEE TRACK PLANS AND DETAILS.

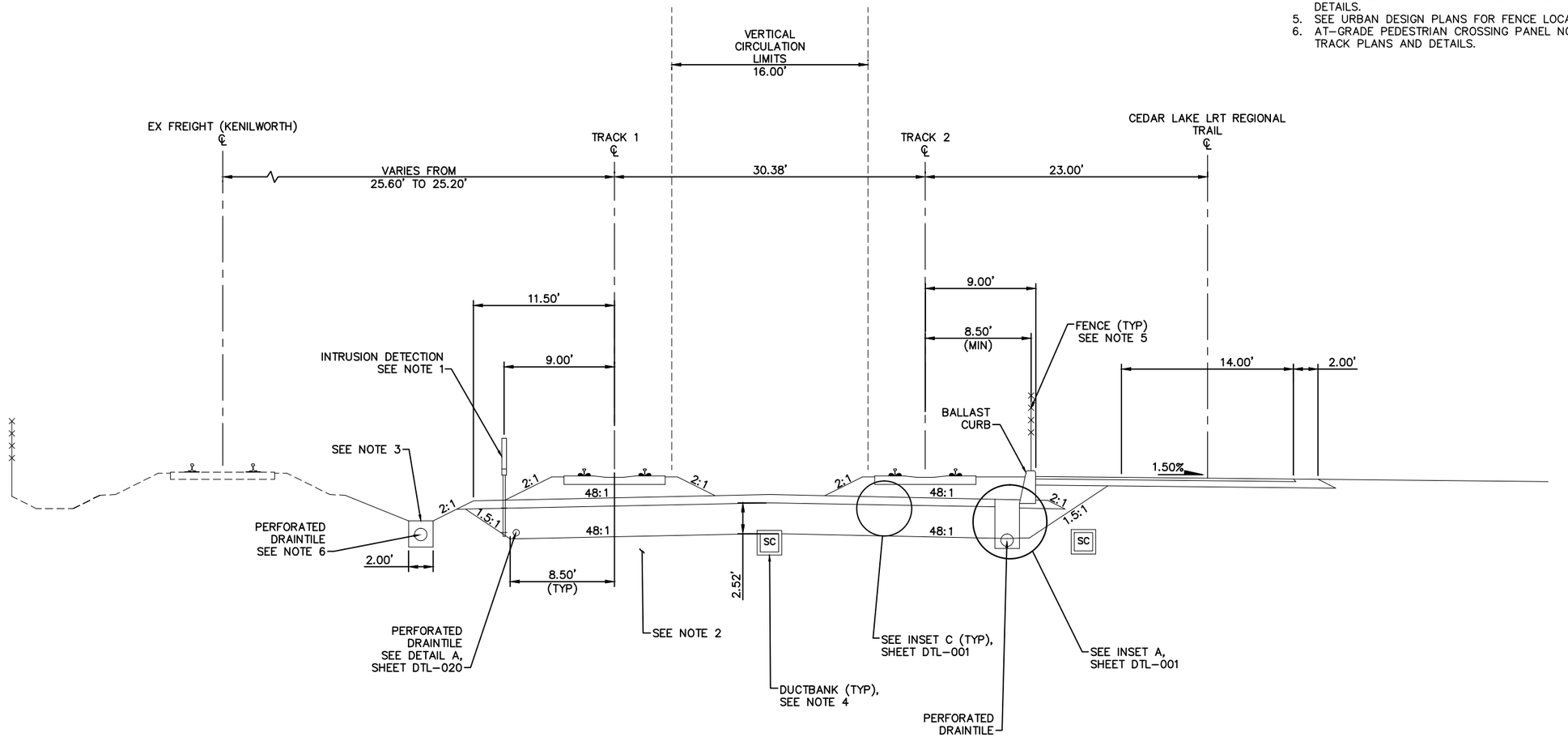

TYPICAL SECTION
STA 2768+65.03 TO STA 2769+50.00

SCALE 0 2.5 5 10 IN FEET

NO.	DATE	BY	CHECK	DESIGN	REVISION / SUBMITTAL

AECOM

90% SUBMISSION - 01/22/16

METROPOLITAN COUNCIL

SOUTHWEST Green Line LRT Extension

CIVIL - VOLUME 3B
TRACK
TYPICAL SECTIONS

DISCIPLINE: TRACK

SHEET NAME: E3-TRK-TYP - 006

SHEET 135 OF 420

Jan, 18 2016 08:05 am V:\3400_ADC\CAD\00_EAST\PLANSHEETS\TRACK\E3-TRK-TYP.dwg By: V-RasulL

NOTES:
1. SEE SYSTEM PLANS FOR INTRUSION DETECTION DETAILS.
2. SEE SOIL CORRECTION TABLE FOR DETAILS.
3. FOR DITCH INVERT AND DETAILS, SEE DRAINAGE PLANS.
4. SEE SYSTEMS PLANS FOR DUCTBANK AND CABLE TROUGH DETAILS.
5. SEE URBAN DESIGN PLANS FOR FENCE LOCATION AND DETAILS.

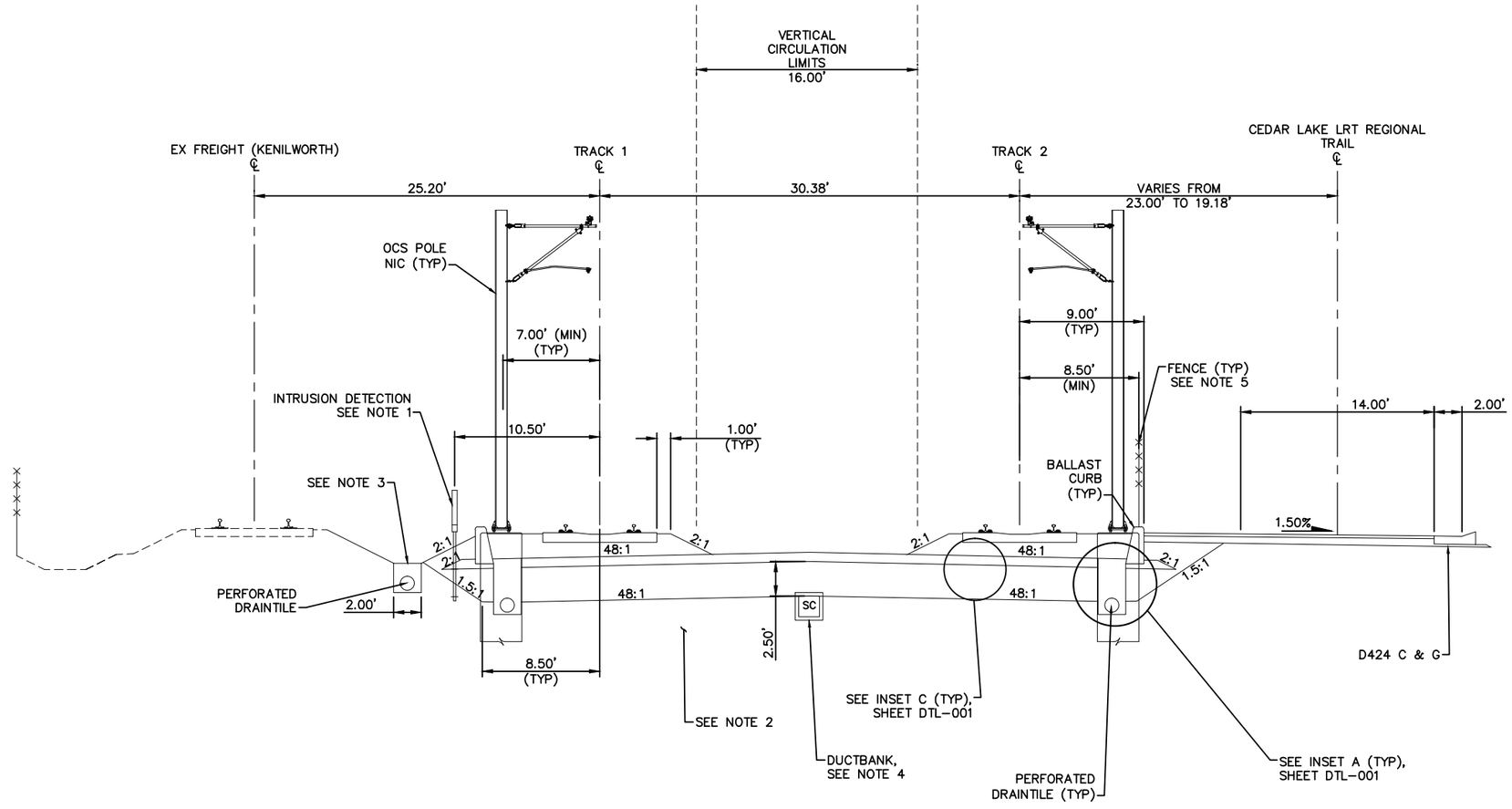

TYPICAL SECTION
STA 2769+50.00 TO STA 2770+57.08

SCALE 0 2.5 5 10 IN FEET

NO.	DATE	BY	CHECK	DESIGN	REVISION / SUBMITTAL

AECOM

90% SUBMISSION - 01/22/16

METROPOLITAN COUNCIL

SOUTHWEST Green Line LRT Extension

CIVIL - VOLUME 3B
TRACK
TYPICAL SECTIONS

DISCIPLINE: TRACK

SHEET NAME: E3-TRK-TYP - 007

SHEET 136 OF 420

Jan, 18 2016 07:33 am V:\3400_ADC\CAD\00_EAST\PLANSHEETS\TRACK\E3-TRK-TYP.dwg By: V-RasulL

NOTES:
1. SEE STATION PLANS FOR DETAILS.
2. SELECT GRANULAR DEPTH: STA 2770+57.08: 2.50'; STA 2770+68.00 TO STA 2770+99.51: 2.00'. TRANSITION LINEARLY BETWEEN STA 2770+57.08 AND STA 2770+68.00.
3. TRANSITION FROM 8.50' TO 8.00' BETWEEN STA 2770+57.08 AND STA 2770+68.00.
4. SEE SYSTEMS PLANS FOR DUCTBANK AND CABLE TROUGH DETAILS.
5. SEE SYSTEM PLANS FOR INTRUSION DETECTION DETAILS.
6. SEE URBAN DESIGN PLANS FOR FENCE LOCATION AND DETAILS.

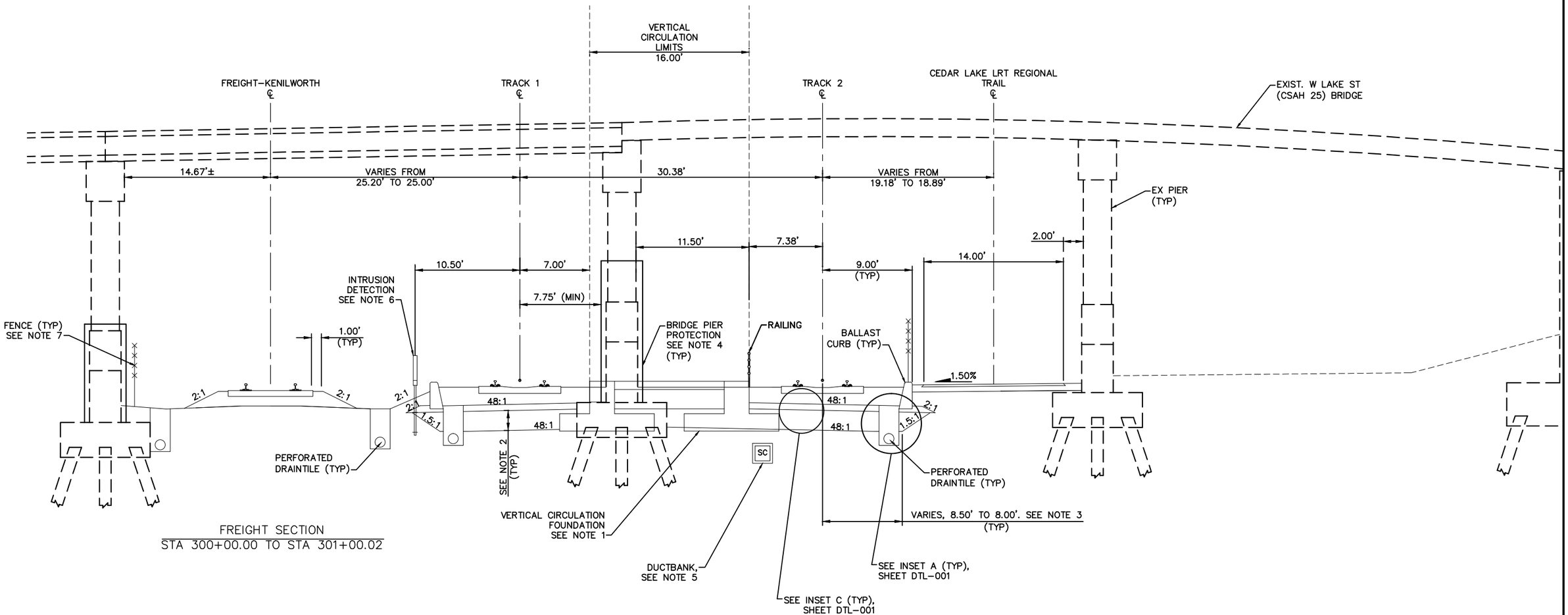

FREIGHT SECTION
STA 300+00.00 TO STA 301+00.02

TYPICAL SECTION
STA 2770+57.08 TO STA 2770+99.51

SCALE 0 2.5 5 10 IN FEET

NO.	DATE	BY	CHECK	DESIGN	REVISION / SUBMITTAL

AECOM

90% SUBMISSION - 01/22/16

METROPOLITAN COUNCIL

SOUTHWEST Green Line LRT Extension

CIVIL - VOLUME 3B
TRACK
TYPICAL SECTIONS

DISCIPLINE: TRACK

SHEET NAME: E3-TRK-TYP - 008

SHEET 137 OF 420

Jan, 18 2016 07:34 am V:\3400_ADC\CAD\00_EAST\PLANSHEETS\TRACK\E3-TRK-TYP.dwg By: V-RasulL

NOTES:
1. SEE STATION PLANS FOR DETAILS.
2. SEE RETAINING WALL PLANS FOR DETAILS.
3. SEE URBAN DESIGN PLANS FOR FENCE LOCATION AND DETAILS.
4. SEE SYSTEM PLANS FOR INTRUSION DETECTION DETAILS.
5. SEE STRUCTURAL PLANS FOR PROPOSED PIER PROTECTION DETAILS.
6. SEE SYSTEMS PLANS FOR DUCTBANK AND CABLE TROUGH DETAILS.

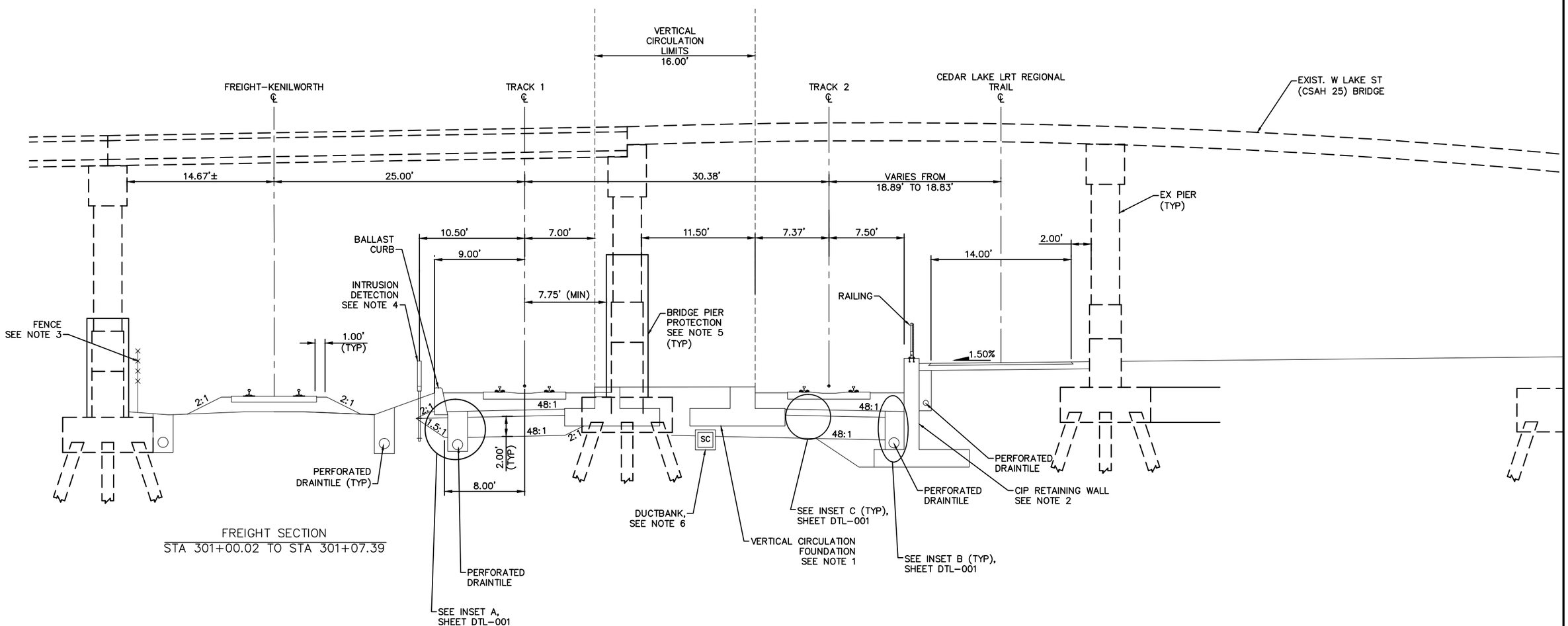

FREIGHT SECTION
STA 301+00.02 TO STA 301+07.39

TYPICAL SECTION
STA 2770+99.51 TO STA 2771+61.58

SCALE 0 2.5 5 10 IN FEET

NO.	DATE	BY	CHECK	DESIGN	REVISION / SUBMITTAL

AECOM

90% SUBMISSION - 01/22/16

METROPOLITAN COUNCIL

SOUTHWEST Green Line LRT Extension

CIVIL - VOLUME 3B
TRACK
TYPICAL SECTIONS

DISCIPLINE: TRACK

SHEET NAME: E3-TRK-TYP - 009

SHEET 138 OF 420

Jan, 18 2016 07:34 am V:\3400_ADC\CAD\00_EAST\PLANSHEETS\TRACK\E3-TRK-TYP.dwg By: V-RasulL

NOTES:
1. SEE RETAINING WALL PLANS FOR DETAILS.
2. SEE SYSTEM PLANS FOR INTRUSION DETECTION DETAILS.
3. FOR DITCH INVERT AND DETAILS, SEE DRAINAGE PLANS.
4. SEE URBAN DESIGN PLANS FOR FENCE LOCATION AND DETAILS.
5. SEE SYSTEMS PLANS FOR DUCTBANK AND CABLE TROUGH DETAILS.

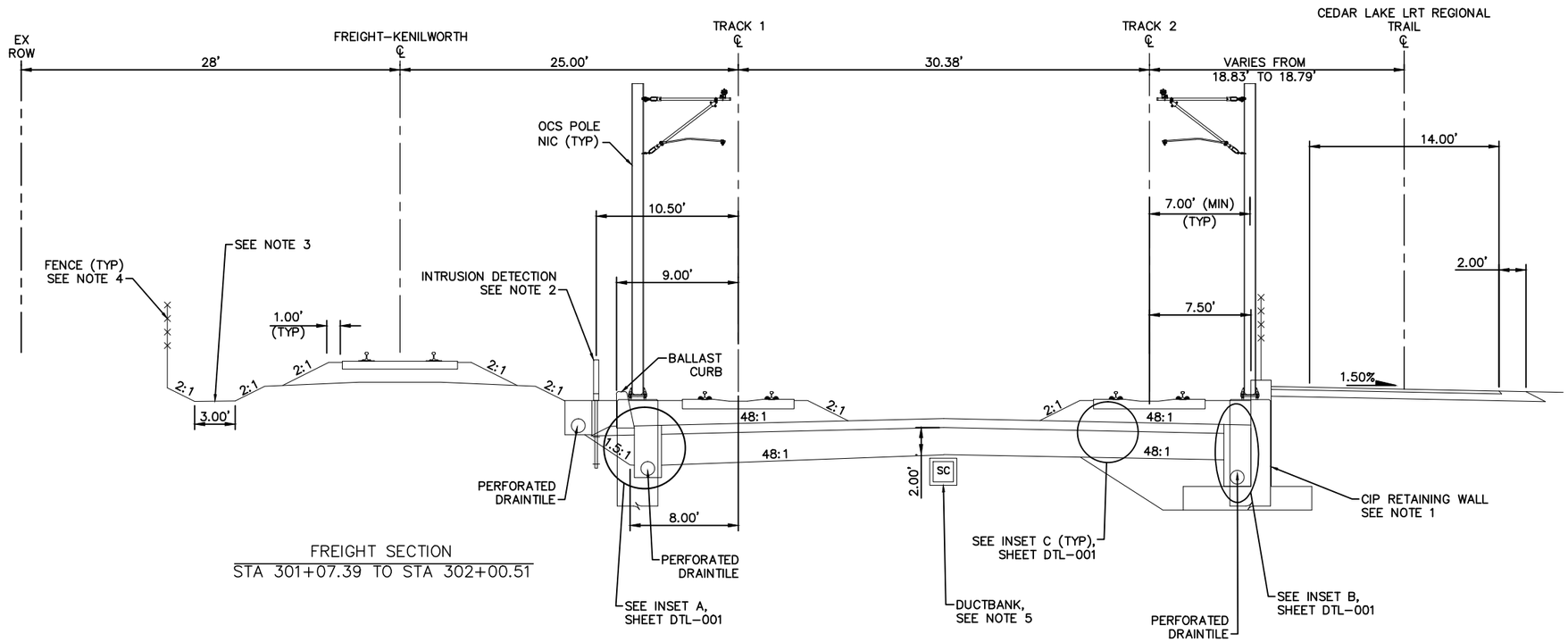

FREIGHT SECTION
STA 301+07.39 TO STA 302+00.51

TYPICAL SECTION
STA 2771+61.58 TO STA 2772+00.00

SCALE 0 2.5 5 10 IN FEET

NO.	DATE	BY	CHECK	DESIGN	REVISION / SUBMITTAL

AECOM

90% SUBMISSION - 01/22/16

METROPOLITAN COUNCIL

SOUTHWEST Green Line LRT Extension

CIVIL - VOLUME 3B
TRACK
TYPICAL SECTIONS

DISCIPLINE: TRACK

SHEET NAME: E3-TRK-TYP - 010

SHEET 139 OF 420

Jan, 18 2016 07:34 am V:\3400_ADC\CAD\00_EAST\PLANSHEETS\TRACK\E3-TRK-TYP.dwg By: V-RasulL

NOTES:
1. TRACK CENTERS NARROWS FROM 30.38' TO 30.37' BETWEEN STA 2772+00.00 AND STA 2772+50.00.
2. SEE RETAINING WALL PLANS FOR DETAILS.
3. SEE SYSTEM PLANS FOR INTRUSION DETECTION DETAILS.
4. FOR DITCH INVERT AND DETAILS, SEE DRAINAGE PLANS.
5. SEE URBAN DESIGN PLANS FOR FENCE LOCATION AND DETAILS.
6. SEE SYSTEMS PLANS FOR DUCTBANK AND CABLE TROUGH DETAILS.

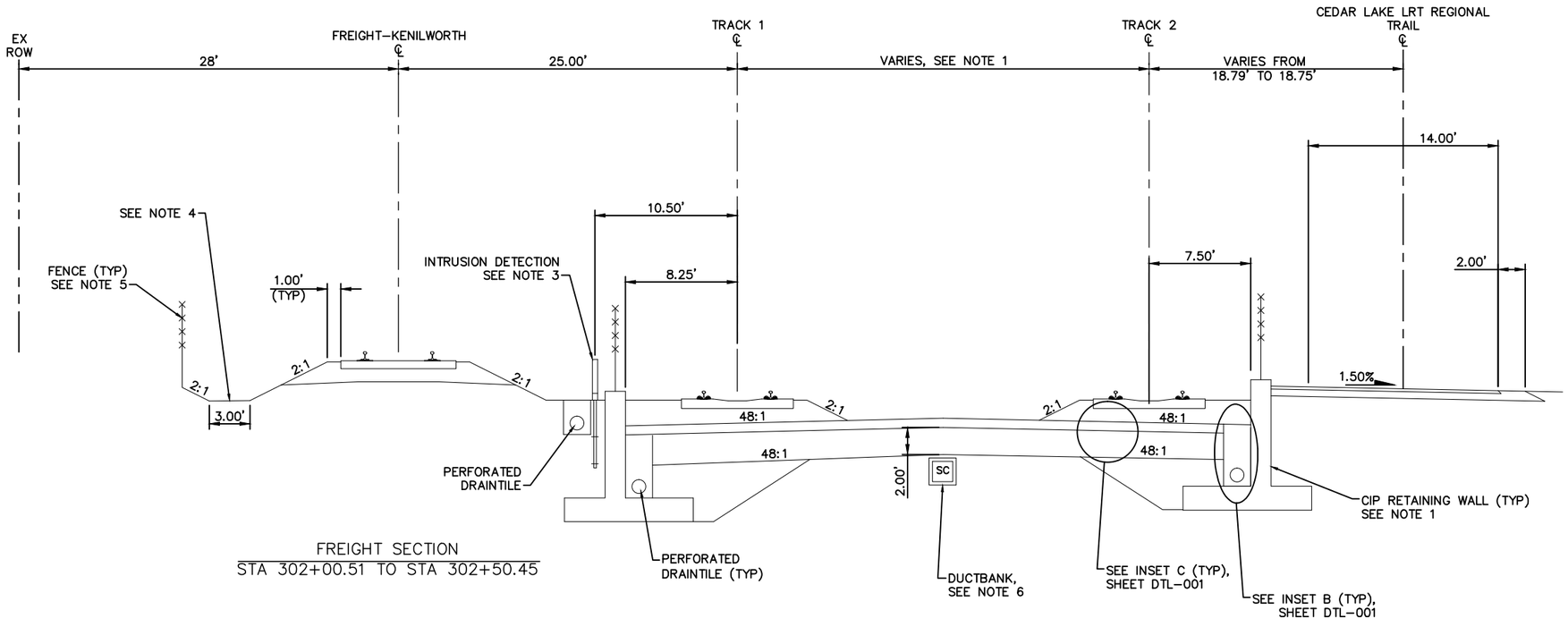

FREIGHT SECTION
STA 302+00.51 TO STA 302+50.45

TYPICAL SECTION
STA 2772+00.00 TO STA 2772+50.00

0 2.5 5 10
SCALE IN FEET

NO.	DATE	BY	CHECK	DESIGN	REVISION / SUBMITTAL

AECOM

90% SUBMISSION - 01/22/16

METROPOLITAN COUNCIL

SOUTHWEST Green Line LRT Extension

CIVIL - VOLUME 3B
TRACK
TYPICAL SECTIONS

DISCIPLINE: TRACK

SHEET NAME: E3-TRK-TYP - 011

SHEET 140 OF 420

Jan, 18 2016 07:35 am V:\3400_ADC\CAD\00_EAST\PLANSHEETS\TRACK\E3-TRK-TYP.dwg By: V-RasulL

NOTES:
1. TRACK CENTERS NARROW FROM 30.38' TO 19.92' BETWEEN STA 2772+50.00 AND STA 2775+99.92.
2. MnDOT BRIDGE 27C15. SEE STRUCTURAL PLANS.
3. FOR TEMPORARY SUPPORT OF EXCAVATION AND FINAL STRUCTURE, SEE TUNNEL STRUCTURE DRAWINGS.
4. SEE TRACK DETAILS FOR PLINTH LAYOUT.
5. SEE SYSTEMS PLANS FOR DUCTBANK AND CABLE TROUGH DETAILS.
6. SEE URBAN DESIGN PLANS FOR FENCE LOCATION AND DETAILS.
7. PERFORATED DRAINTILE BEGINS AT FREIGHT STA 303+50.00.
8. FOR DITCH INVERT AND DETAILS, SEE DRAINAGE PLANS.

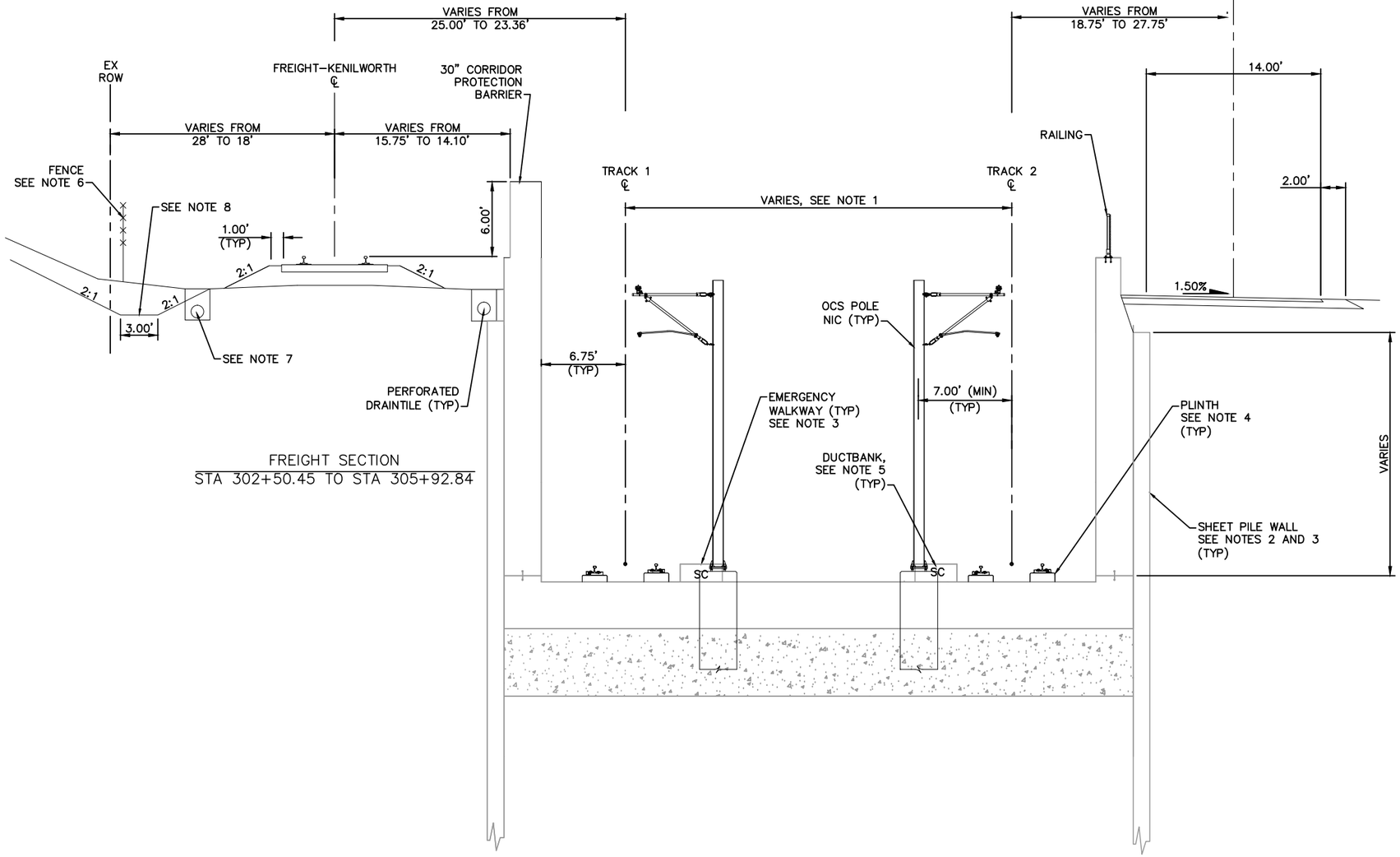

FREIGHT SECTION
STA 302+50.45 TO STA 305+92.84

TYPICAL SECTION
STA 2772+50.00 TO STA 2776+00.00

0 2.5 5 10
SCALE IN FEET

NO.	DATE	BY	CHECK	DESIGN	REVISION / SUBMITTAL

AECOM

90% SUBMISSION - 01/22/16

METROPOLITAN COUNCIL

SOUTHWEST Green Line LRT Extension

CIVIL - VOLUME 3B
TRACK
TYPICAL SECTIONS

DISCIPLINE: TRACK

SHEET NAME: E3-TRK-TYP - 012

SHEET 141 OF 420

Jan, 18 2016 07:35 am v:\3400_ADC\CAD\00_EAST\PLANSHEETS\TRACK\E3-TRK-TYP.dwg By: V-RasulL

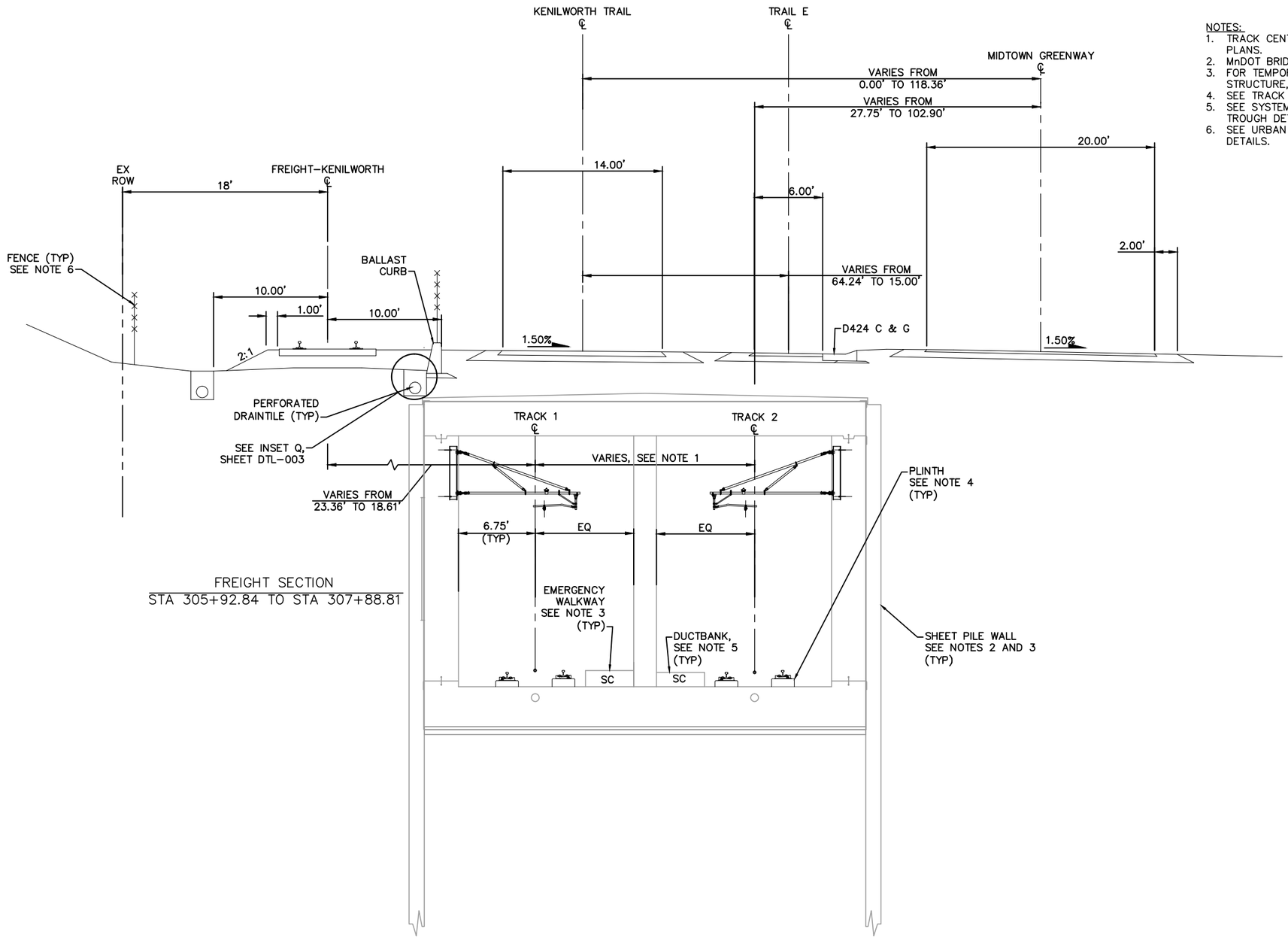

FREIGHT SECTION
STA 305+92.84 TO STA 307+88.81

TYPICAL SECTION
STA 2776+00.00 TO STA 2778+00.00

NOTES:
1. TRACK CENTERS VARY IN CURVE E3–202. SEE TRACK PLANS.
2. MnDOT BRIDGE 27C15. SEE STRUCTURAL PLANS.
3. FOR TEMPORARY SUPPORT OF EXCAVATION AND FINAL STRUCTURE, SEE TUNNEL STRUCTURE DRAWINGS.
4. SEE TRACK DETAILS FOR PLINTH LAYOUT.
5. SEE SYSTEMS PLANS FOR DUCTBANK AND CABLE TROUGH DETAILS.
6. SEE URBAN DESIGN PLANS FOR FENCE LOCATION AND DETAILS.

SCALE 0 2.5 5 10 IN FEET

NO.	DATE	BY	CHECK	DESIGN	REVISION / SUBMITTAL

AECOM

90% SUBMISSION - 01/22/16

METROPOLITAN COUNCIL

SOUTHWEST Green Line LRT Extension

CIVIL - VOLUME 3B
TRACK
TYPICAL SECTIONS

DISCIPLINE: TRACK

SHEET NAME: E3-TRK-TYP - 013

SHEET 142 OF 420

Jan. 18 2016 07:35 am V:\3400_ADC\CAD\00_EAST\PLANSHEETS\TRACK\E3-TRK-TYP.dwg By: V-RasulL

NOTES:
1. TRACK CENTERS VARY IN CURVE E3–202. SEE TRACK PLANS.
2. MnDOT BRIDGE 27C15. SEE STRUCTURAL PLANS.
3. FOR TEMPORARY SUPPORT OF EXCAVATION AND FINAL STRUCTURE, SEE TUNNEL STRUCTURE DRAWINGS.
4. SEE TUNNEL SYSTEMS AND ELECTRICAL PLANS FOR DETAILS.
5. SEE TRACK DETAILS FOR PLINTH LAYOUT.
6. SEE SYSTEMS PLANS FOR DUCTBANK AND CABLE TROUGH DETAILS.
7. SEE URBAN DESIGN PLANS FOR FENCE LOCATION AND DETAILS.

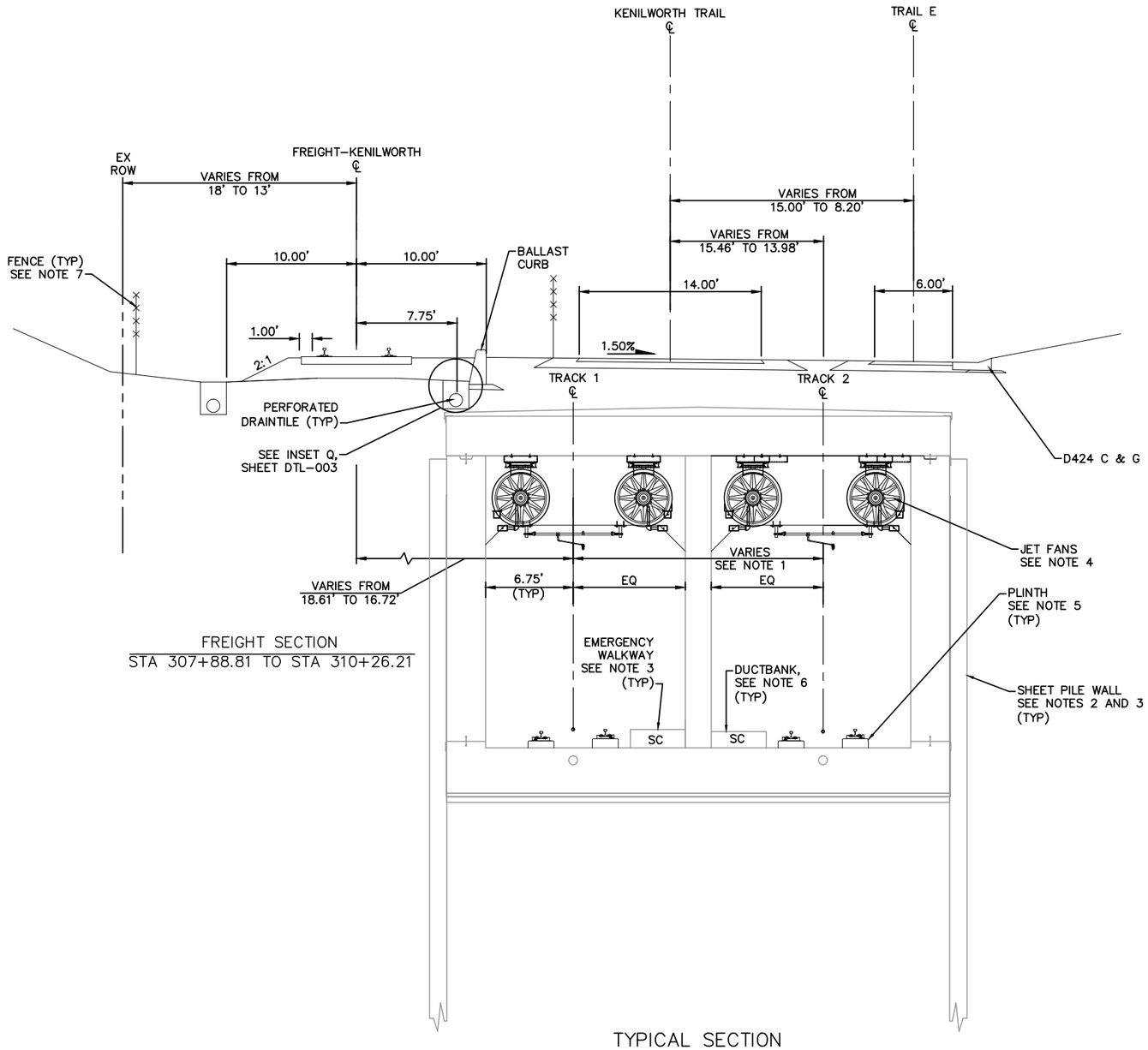

FREIGHT SECTION
STA 307+88.81 TO STA 310+26.21

TYPICAL SECTION
STA 2778+00.00 TO STA 2780+41.91

SCALE 0 2.5 5 10 IN FEET

NO.	DATE	BY	CHECK	DESIGN	REVISION / SUBMITTAL

AECOM

90% SUBMISSION - 01/22/16

METROPOLITAN COUNCIL

SOUTHWEST Green Line LRT Extension

CIVIL - VOLUME 3B
TRACK
TYPICAL SECTIONS

DISCIPLINE: TRACK

SHEET NAME: E3-TRK-TYP - 014

SHEET 143 OF 420

Jan, 18 2016 07:36 am V:\3400_ADC\CAD\00_EAST\PLANSHEETS\TRACK\E3-TRK-TYP.dwg By: V-RosulL

NOTES:
1. TRACK CENTERS VARY IN CURVES E3-202 AND E3-203 . SEE TRACK PLANS.
2. MnDOT BRIDGE 27C15. SEE STRUCTURAL PLANS.
3. FOR TEMPORARY SUPPORT OF EXCAVATION AND FINAL STRUCTURE, SEE TUNNEL STRUCTURE DRAWINGS.
4. SEE TRACK DETAILS FOR PLINTH LAYOUT.
5. SEE SYSTEMS PLANS FOR DUCTBANK AND CABLE TROUGH DETAILS.
6. FOR DITCH INVERT AND DETAILS, SEE DRAINAGE PLANS.
7. PERFORATED DRAINTILE ENDS AT FREIGHT STA 319+00.00.
8. SEE URBAN DESIGN PLANS FOR FENCE LOCATION AND DETAILS.

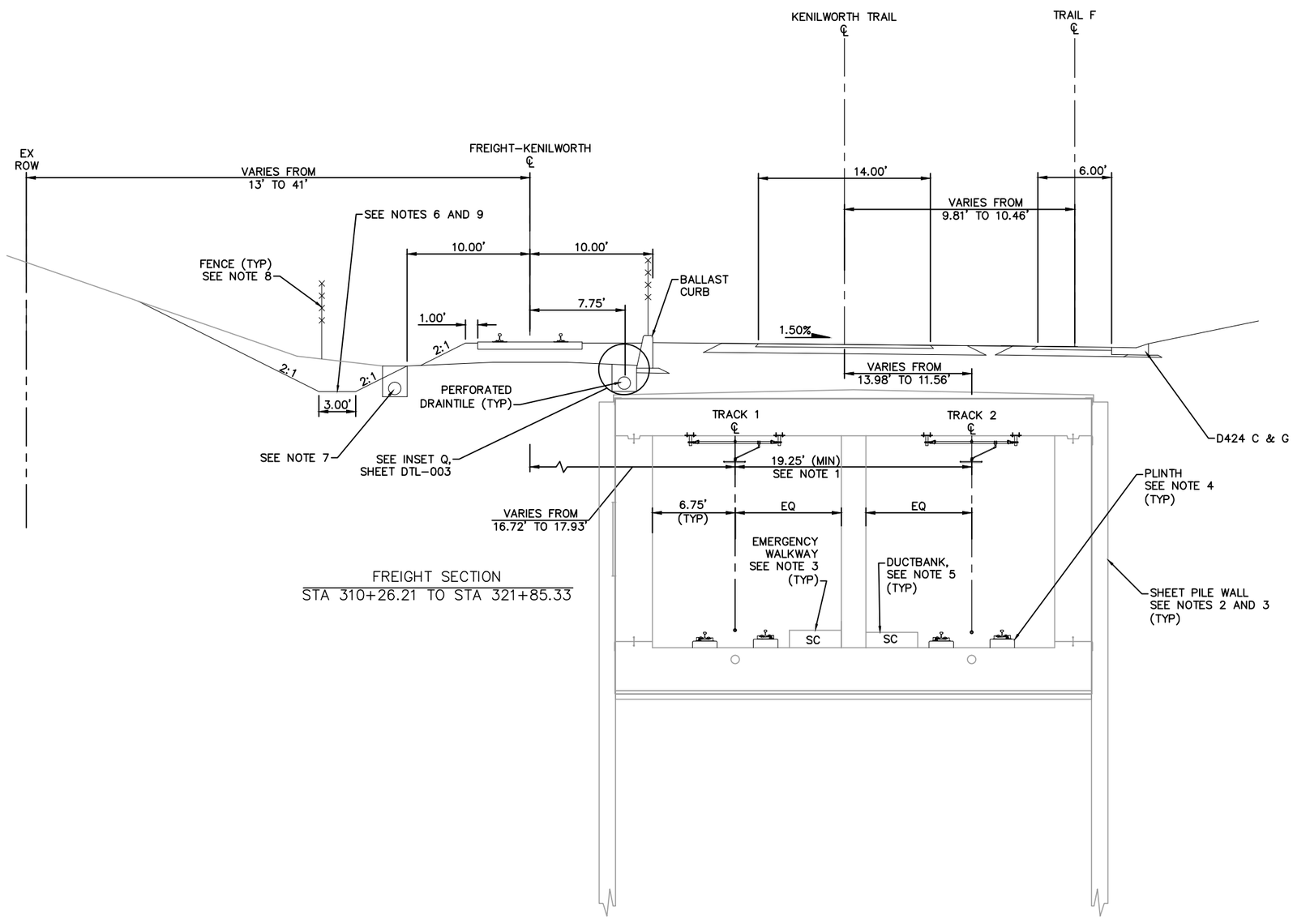

FREIGHT SECTION
STA 310+26.21 TO STA 321+85.33

TYPICAL SECTION
STA 2780+41.91 TO STA 2791+92.47

SCALE 0 2.5 5 10 IN FEET

NO.	DATE	BY	CHECK	DESIGN	REVISION / SUBMITTAL

AECOM

90% SUBMISSION - 01/22/16

METROPOLITAN COUNCIL

SOUTHWEST Green Line LRT Extension

CIVIL - VOLUME 3B
TRACK
TYPICAL SECTIONS

DISCIPLINE: TRACK

SHEET NAME: E3-TRK-TYP - 015

SHEET 144 OF 420

Jan, 18 2016 07:36 am V:\3400_ADC\CAD\00_EAST\PLANSHEETS\TRACK\E3-TRK-TYP.dwg By: V-RasulL

NOTES:
1. MnDOT BRIDGE 27C15. SEE STRUCTURAL PLANS.
2. FOR TEMPORARY SUPPORT OF EXCAVATION AND FINAL STRUCTURE, SEE TUNNEL STRUCTURE DRAWINGS.
3. SEE TRACK DETAILS FOR PLINTH LAYOUT.
4. SEE SYSTEMS PLANS FOR DUCTBANK AND CABLE TROUGH DETAILS.
5. SECTION DOES NOT ILLUSTRATE FREIGHT GRADE CROSSING AT CEDAR LAKE PKWY. SEE TRACK PLANS AND DETAILS.
6. SEE URBAN DESIGN PLANS FOR FENCE LOCATION AND DETAILS.

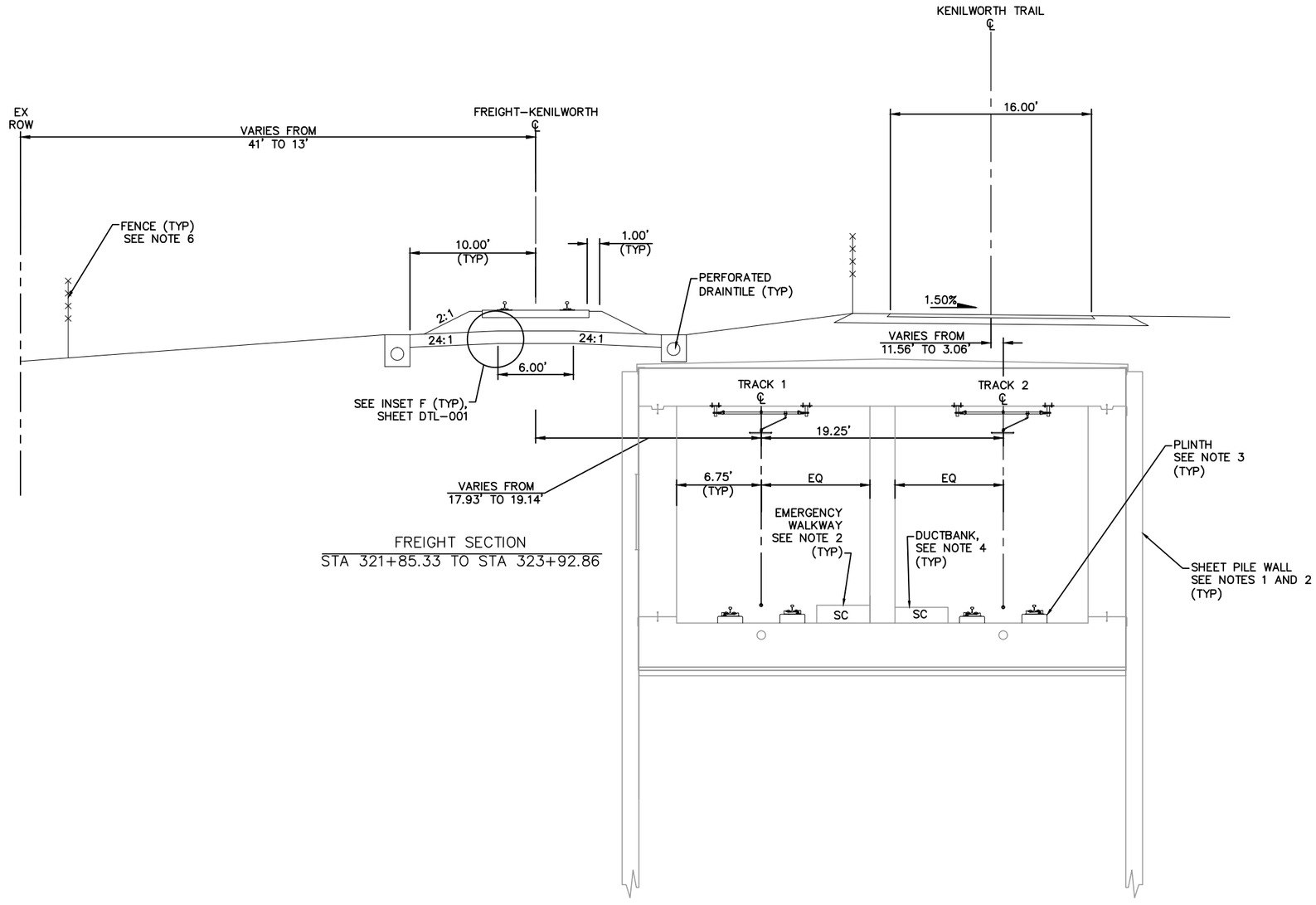

FREIGHT SECTION
STA 321+85.33 TO STA 323+92.86

TYPICAL SECTION
STA 2791+92.47 TO STA 2794+00.00

SCALE 0 2.5 5 10 IN FEET

NO.	DATE	BY	CHECK	DESIGN	REVISION / SUBMITTAL

AECOM

90% SUBMISSION - 01/22/16

METROPOLITAN COUNCIL

SOUTHWEST Green Line LRT Extension

CIVIL - VOLUME 3B
TRACK
TYPICAL SECTIONS

DISCIPLINE: TRACK

SHEET NAME: E3-TRK-TYP - 016

SHEET 145 OF 420

Jan, 18 2016 07:36 am V:\3400_ADC\CAD\00_EAST\PLANSHEETS\TRACK\E3-TRK-TYP.dwg By: V-RasulL

NOTES:
1. TRACK CENTERS VARY IN CURVE E3–204. SEE TRACK PLANS.
2. MnDOT BRIDGE 27C15. SEE STRUCTURAL PLANS.
3. FOR TEMPORARY SUPPORT OF EXCAVATION AND FINAL STRUCTURE, SEE TUNNEL STRUCTURE DRAWINGS.
4. SEE TUNNEL SYSTEMS AND ELECTRICAL PLANS FOR DETAILS.
5. SEE TRACK DETAILS FOR PLINTH LAYOUT.
6. SEE SYSTEMS PLANS FOR DUCTBANK AND CABLE TROUGH DETAILS.
7. FOR DITCH INVERT AND DETAILS, SEE DRAINAGE PLANS.
8. SEE URBAN DESIGN PLANS FOR FENCE LOCATION AND DETAILS.

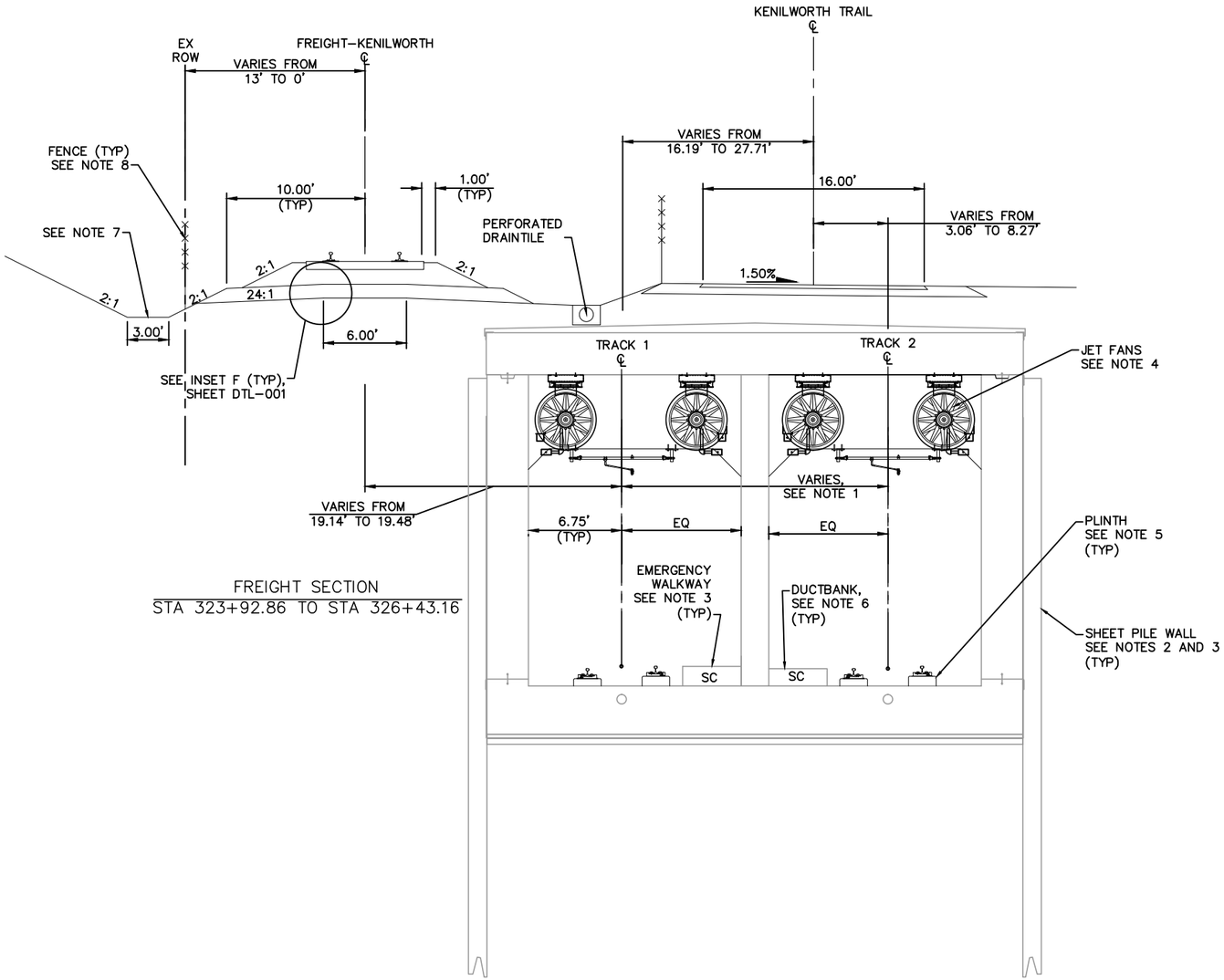

FREIGHT SECTION
STA 323+92.86 TO STA 326+43.16

TYPICAL SECTION
STA 2794+00.00 TO STA 2796+50.00

0 2.5 5 10
SCALE IN FEET

NO.	DATE	BY	CHECK	DESIGN	REVISION / SUBMITTAL

AECOM

90% SUBMISSION - 01/22/16

METROPOLITAN COUNCIL

SOUTHWEST Green Line LRT Extension

CIVIL - VOLUME 3B
TRACK
TYPICAL SECTIONS

DISCIPLINE: TRACK

SHEET NAME: E3-TRK-TYP - 017

SHEET 146 OF 420

Jan, 18 2016 07:36 am v:\3400_ADC\CAD\00_EAST\PLANSHEETS\TRACK\E3-TRK-TYP.dwg By: V-RasulL

NOTES:
1. TRACK CENTERS WIDEN FROM 19.38' TO 19.62' BETWEEN STA 2796+35.14 AND STA 2798+36.06.
2. MnDOT BRIDGE 27C15. SEE STRUCTURAL PLANS.
3. FOR TEMPORARY SUPPORT OF EXCAVATION AND FINAL STRUCTURE, SEE TUNNEL STRUCTURE DRAWINGS.
4. SEE TRACK DETAILS FOR PLINTH LAYOUT.
5. SEE SYSTEMS PLANS FOR DUCTBANK AND CABLE TROUGH DETAILS.
6. FOR DITCH INVERT AND DETAILS, SEE DRAINAGE PLANS.
7. SEE URBAN DESIGN PLANS FOR FENCE LOCATION AND DETAILS.

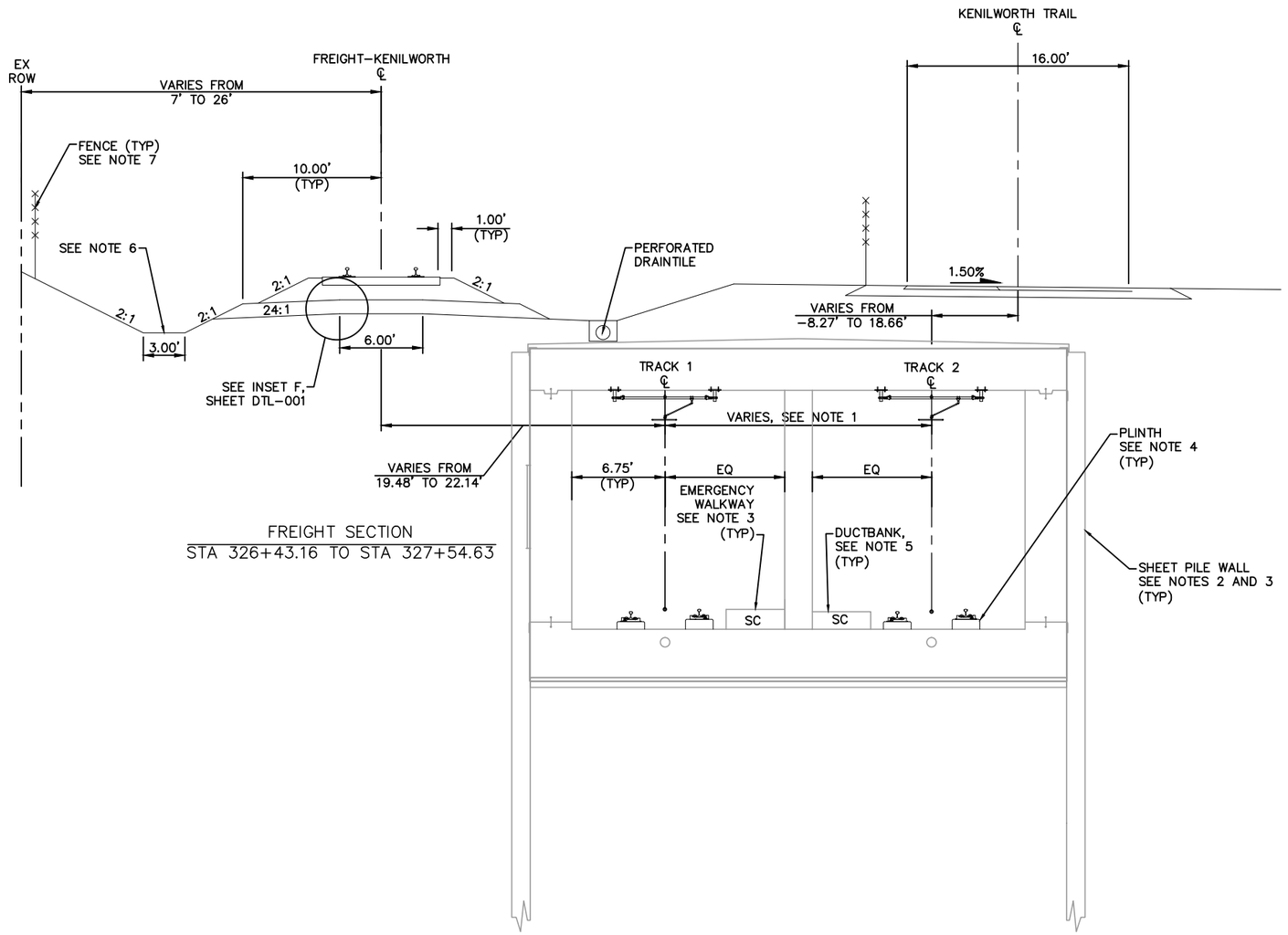

FREIGHT SECTION
STA 326+43.16 TO STA 327+54.63

TYPICAL SECTION
STA 2796+50.00 TO STA 2797+60.85

SCALE 0 2.5 5 10 IN FEET

NO.	DATE	BY	CHECK	DESIGN	REVISION / SUBMITTAL

AECOM

90% SUBMISSION - 01/22/16

METROPOLITAN COUNCIL

SOUTHWEST Green Line LRT Extension

CIVIL - VOLUME 3B
TRACK
TYPICAL SECTIONS

DISCIPLINE: TRACK

SHEET NAME: E3-TRK-TYP - 018

SHEET 147 OF 420

Jan. 18 2016 07:37 am V:\3400_ADC\CAD\00_EAST\PLANSHEETS\TRACK\E3-TRK-TYP.dwg By: V-RasulL

NOTES:
1. TRACK CENTERS NARROW FROM 19.62' TO 18.34' BETWEEN STA 2797+60.85 AND STA 2798+36.06.
2. MnDOT BRIDGE 27C15. SEE STRUCTURAL PLANS.
3. FOR TEMPORARY SUPPORT OF EXCAVATION AND FINAL STRUCTURE, SEE TUNNEL STRUCTURE DRAWINGS.
4. SEE TRACK DETAILS FOR PLINTH LAYOUT.
5. SEE SYSTEMS PLANS FOR DUCTBANK AND CABLE TROUGH DETAILS.
6. FOR DITCH INVERT AND DETAILS, SEE DRAINAGE PLANS.
7. SEE RETAINING WALL PLANS FOR DETAILS.
8. SEE URBAN DESIGN PLANS FOR FENCE LOCATION AND DETAILS.

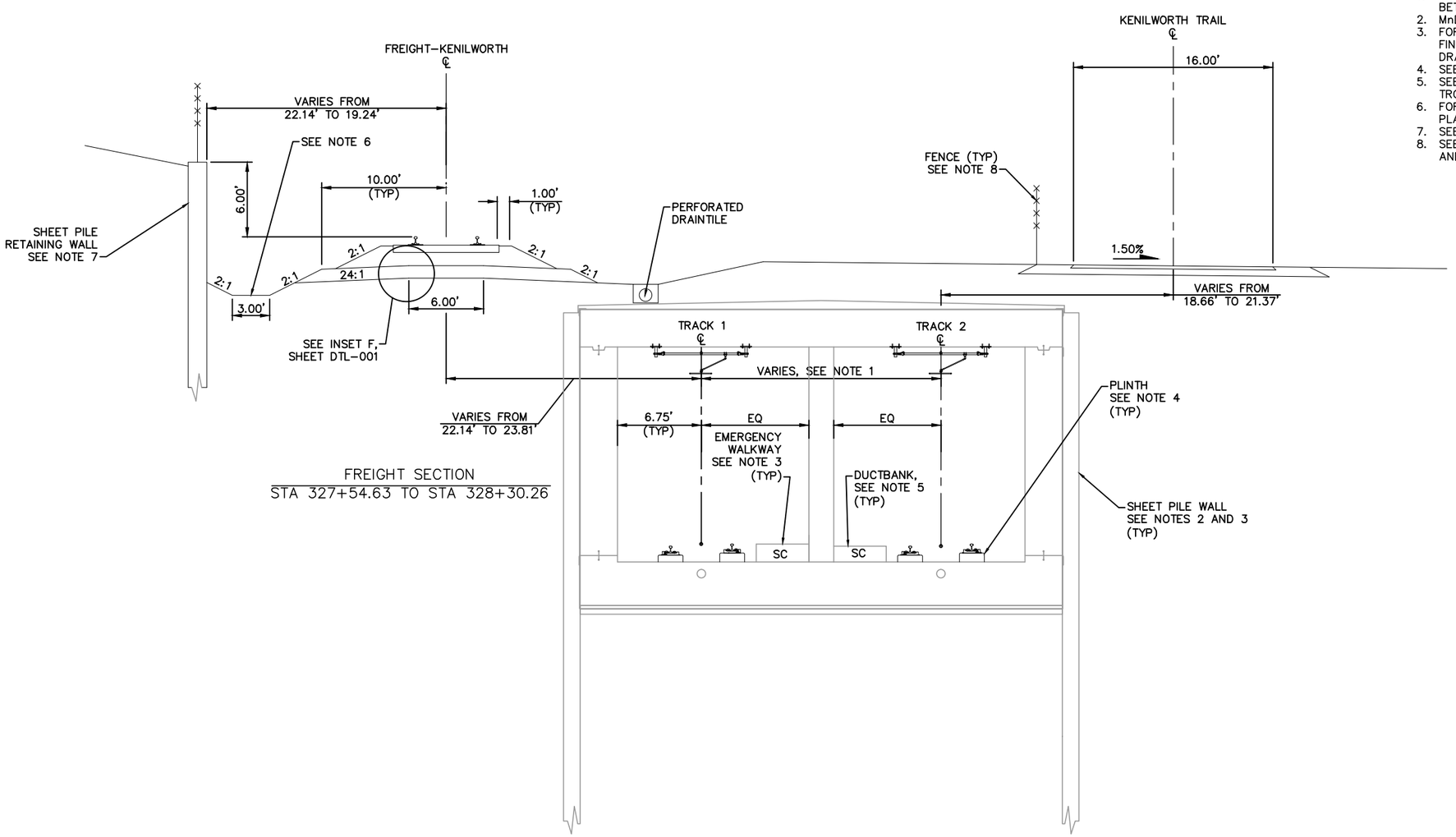

FREIGHT SECTION
STA 327+54.63 TO STA 328+30.26

TYPICAL SECTION
STA 2797+60.85 TO STA 2798+36.06

SCALE 0 2.5 5 10 IN FEET

NO.	DATE	BY	CHECK	DESIGN	REVISION / SUBMITTAL

AECOM

90% SUBMISSION - 01/22/16

METROPOLITAN COUNCIL

SOUTHWEST Green Line LRT Extension

CIVIL - VOLUME 3B
TRACK
TYPICAL SECTIONS

DISCIPLINE: TRACK

SHEET NAME: E3-TRK-TYP - 019

SHEET 148 OF 420

Jan. 18 2016 07:37 am V:\3400_ADC\CAD\00_EAST\PLANSHEETS\TRACK\E3-TRK-TYP.dwg By: V-RasulL

NOTES:
1. TRACK CENTERS NARROW FROM 18.34' TO 16.10' BETWEEN STA 2798+36.06 AND STA 2799+89.84.
2. MnDOT BRIDGE 27C15. SEE STRUCTURAL PLANS.
3. FOR TEMPORARY SUPPORT OF EXCAVATION AND FINAL STRUCTURE, SEE TUNNEL STRUCTURE DRAWINGS.
4. SEE TRACK DETAILS FOR PLINTH LAYOUT.
5. SEE SYSTEMS PLANS FOR DUCTBANK AND CABLE TROUGH DETAILS.
6. SEE RETAINING WALL PLANS FOR DETAILS.
7. FOR DITCH INVERT AND DETAILS, SEE DRAINAGE PLANS.
8. SEE URBAN DESIGN PLANS FOR FENCE LOCATION AND DETAILS.

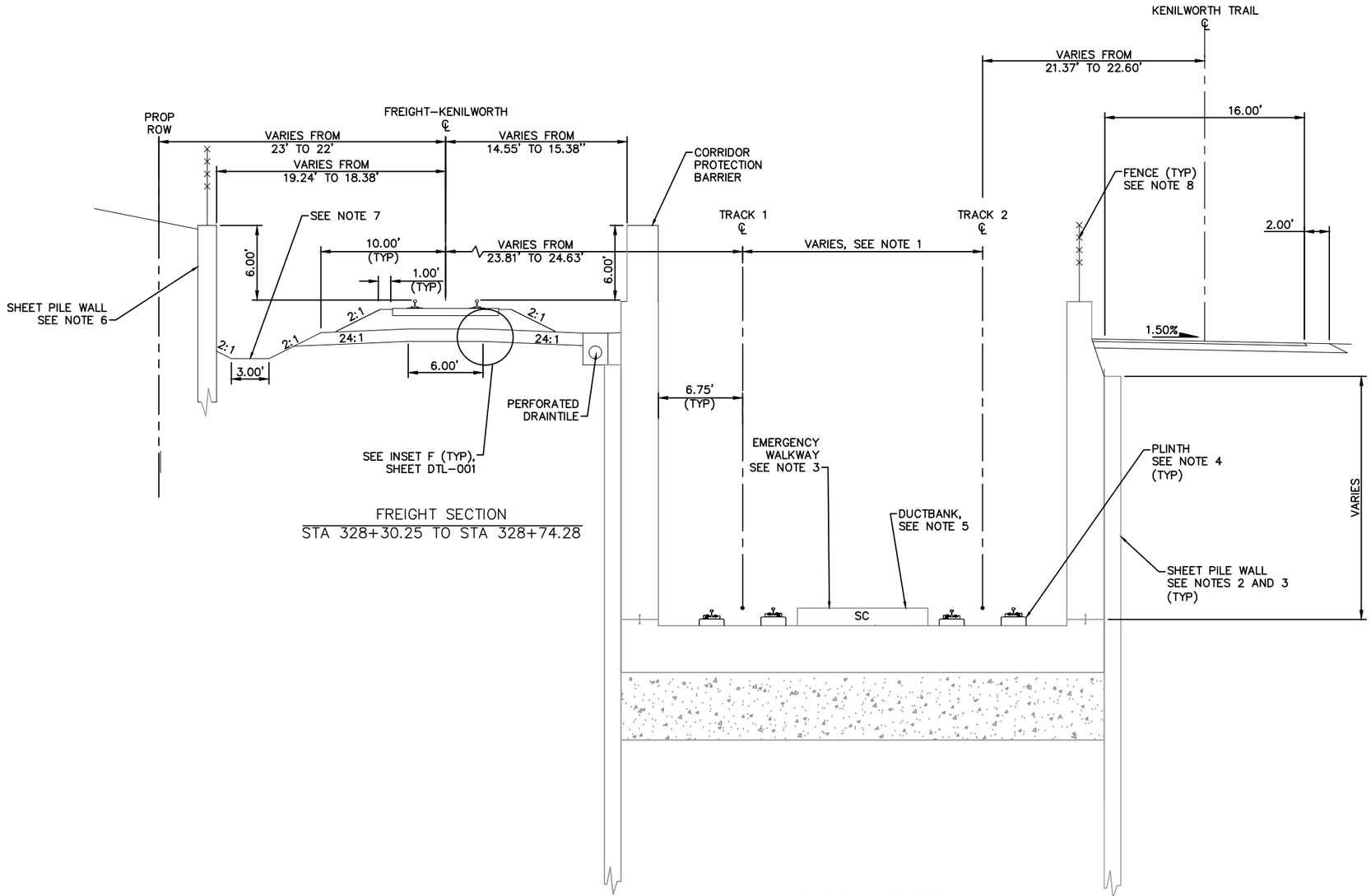

FREIGHT SECTION
STA 328+30.25 TO STA 328+74.28

TYPICAL SECTION
STA 2798+36.06 TO STA 2798+79.83

SCALE 0 2.5 5 10 IN FEET

NO.	DATE	BY	CHECK	DESIGN	REVISION / SUBMITTAL

90% SUBMISSION - 01/22/16

AECOM

METROPOLITAN COUNCIL

SOUTHWEST Green Line LRT Extension

CIVIL - VOLUME 3B
TRACK
TYPICAL SECTIONS

DISCIPLINE: TRACK

SHEET NAME: E3-TRK-TYP - 020

SHEET 149 OF 420

Jan, 18 2016 07:37 am V:\3400_ADC\CAD\00_EAST\PLANSHEETS\TRACK\E3-TRK-TYP.dwg By: V-RasulL

NOTES:
1. TRACK CENTERS NARROW FROM 18.34' TO 16.10' BETWEEN STA 2798+36.06 AND STA 2799+89.84.
2. MnDOT BRIDGE 27C15. SEE STRUCTURAL PLANS.
3. FOR TEMPORARY SUPPORT OF EXCAVATION AND FINAL STRUCTURE, SEE TUNNEL STRUCTURE DRAWINGS.
4. SEE TRACK DETAILS FOR PLINTH LAYOUT.
5. SEE SYSTEMS PLANS FOR DUCTBANK AND CABLE TROUGH DETAILS.
6. FOR DITCH INVERT AND DETAILS, SEE DRAINAGE PLANS.
7. SEE URBAN DESIGN PLANS FOR FENCE LOCATION AND DETAILS.

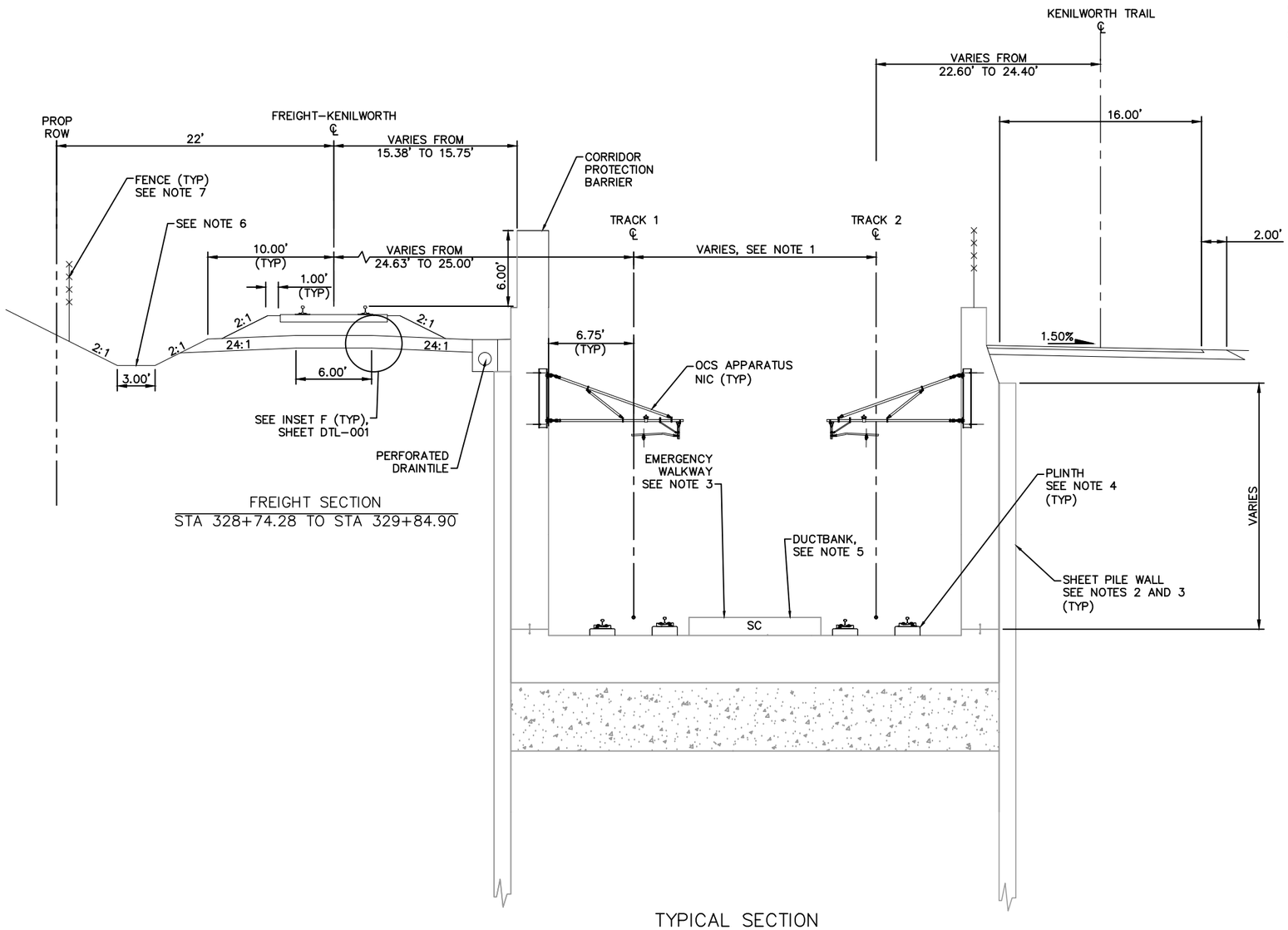

FREIGHT SECTION
STA 328+74.28 TO STA 329+84.90

TYPICAL SECTION
STA 2798+79.83 TO STA 2799+89.84

SCALE 0 2.5 5 10 IN FEET

NO.	DATE	BY	CHECK	DESIGN	REVISION / SUBMITTAL

AECOM

90% SUBMISSION - 01/22/16

METROPOLITAN COUNCIL

SOUTHWEST Green Line LRT Extension

CIVIL - VOLUME 3B
TRACK
TYPICAL SECTIONS

DISCIPLINE: TRACK

SHEET NAME: E3-TRK-TYP - 021

SHEET 150 OF 420

Jan, 18 2016 07:38 am V:\3400_ADC\CAD\00_EAST\PLANSHEETS\TRACK\E3-TRK-TYP.dwg By: V-RasulL

NOTES:
1. TRACK CENTERS NARROW FROM 16.10' TO 16.00' BETWEEN STA 2799+89.84 AND STA 2800+54.30.
2. MnDOT BRIDGE 27C15. SEE STRUCTURAL PLANS.
3. FOR TEMPORARY SUPPORT OF EXCAVATION AND FINAL STRUCTURE, SEE TUNNEL STRUCTURE DRAWINGS.
4. SEE TRACK DETAILS FOR PLINTH LAYOUT.
5. SEE SYSTEMS PLANS FOR DUCTBANK AND CABLE TROUGH DETAILS.
6. SEE RETAINING WALL PLANS FOR DETAILS.
7. FOR GUARD RAIL LIMITS SEE TRACK CHARTS.

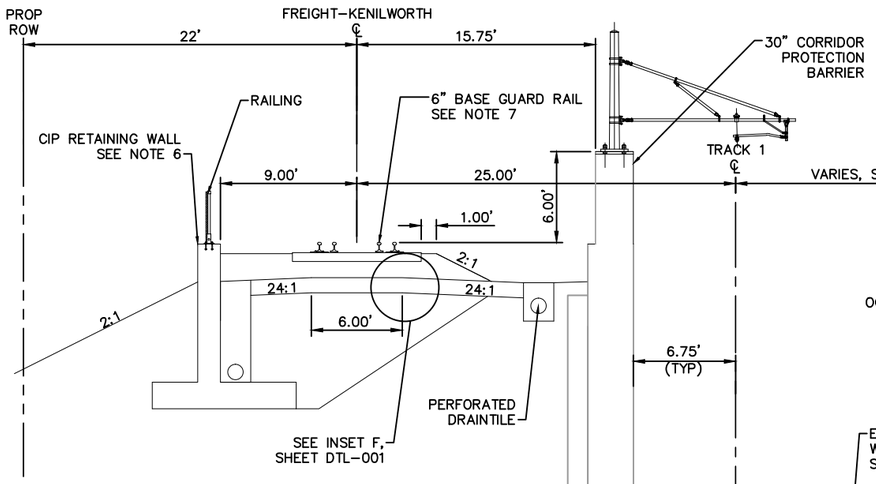

FREIGHT SECTION
STA 329+84.90 TO STA 331+15.25

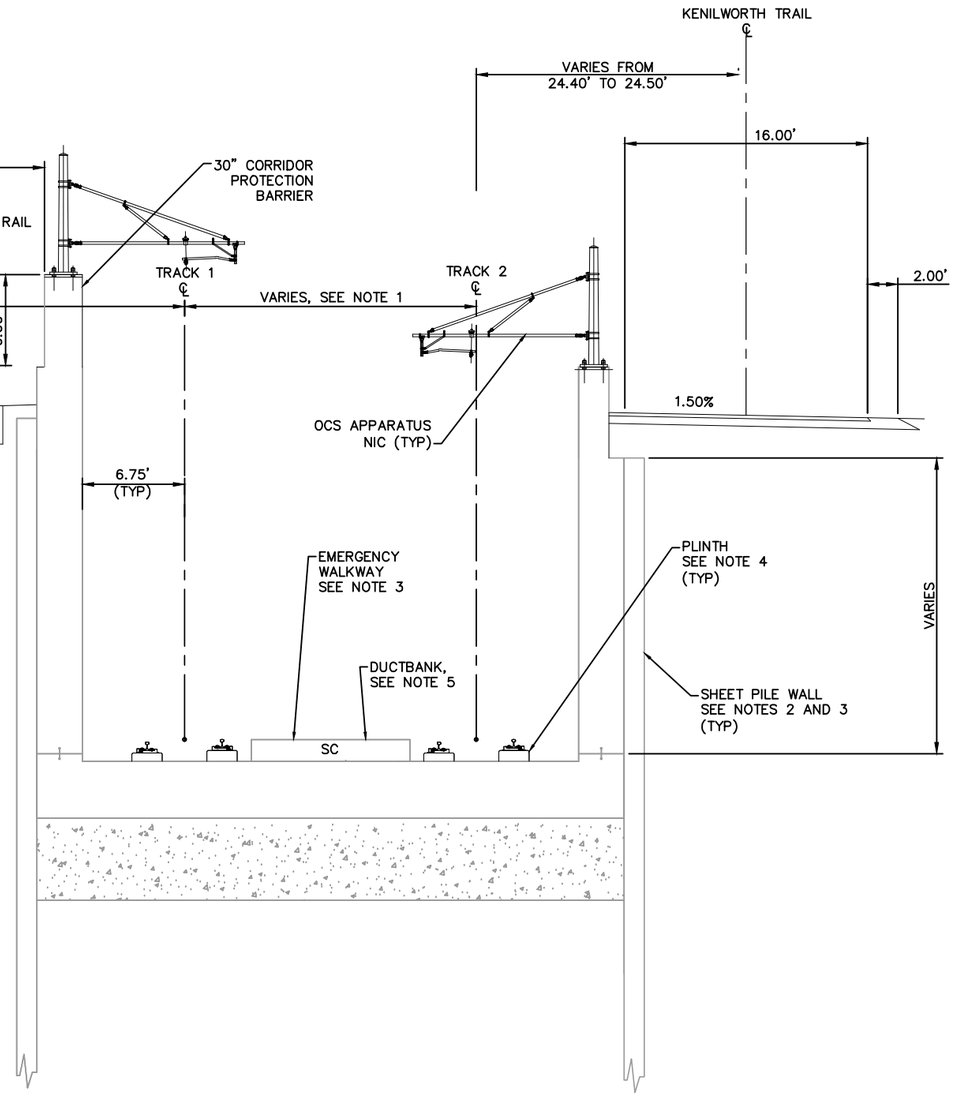

TYPICAL SECTION
STA 2799+89.84 TO STA 2801+20.00

SCALE 0 2.5 5 10 IN FEET

NO.	DATE	BY	CHECK	DESIGN	REVISION / SUBMITTAL

AECOM

90% SUBMISSION - 01/22/16

METROPOLITAN COUNCIL

SOUTHWEST Green Line LRT Extension

CIVIL - VOLUME 3B
TRACK
TYPICAL SECTIONS

DISCIPLINE: TRACK

SHEET NAME: E3-TRK-TYP - 022

SHEET 151 OF 420

Jan, 18 2016 07:38 am v:\3400_ADC\CAD\00_EAST\PLANSHEETS\TRACK\E3-TRK-TYP.dwg By: V-RasulL

NOTE:
1. SEE RETAINING WALL PLANS FOR DETAILS.
2. SEE SYSTEM PLANS FOR INTRUSION DETECTION DETAILS.
3. SEE SYSTEMS PLANS FOR DUCTBANK AND CABLE TROUGH DETAILS.
4. FOR GUARD RAIL LIMITS SEE TRACK CHARTS.

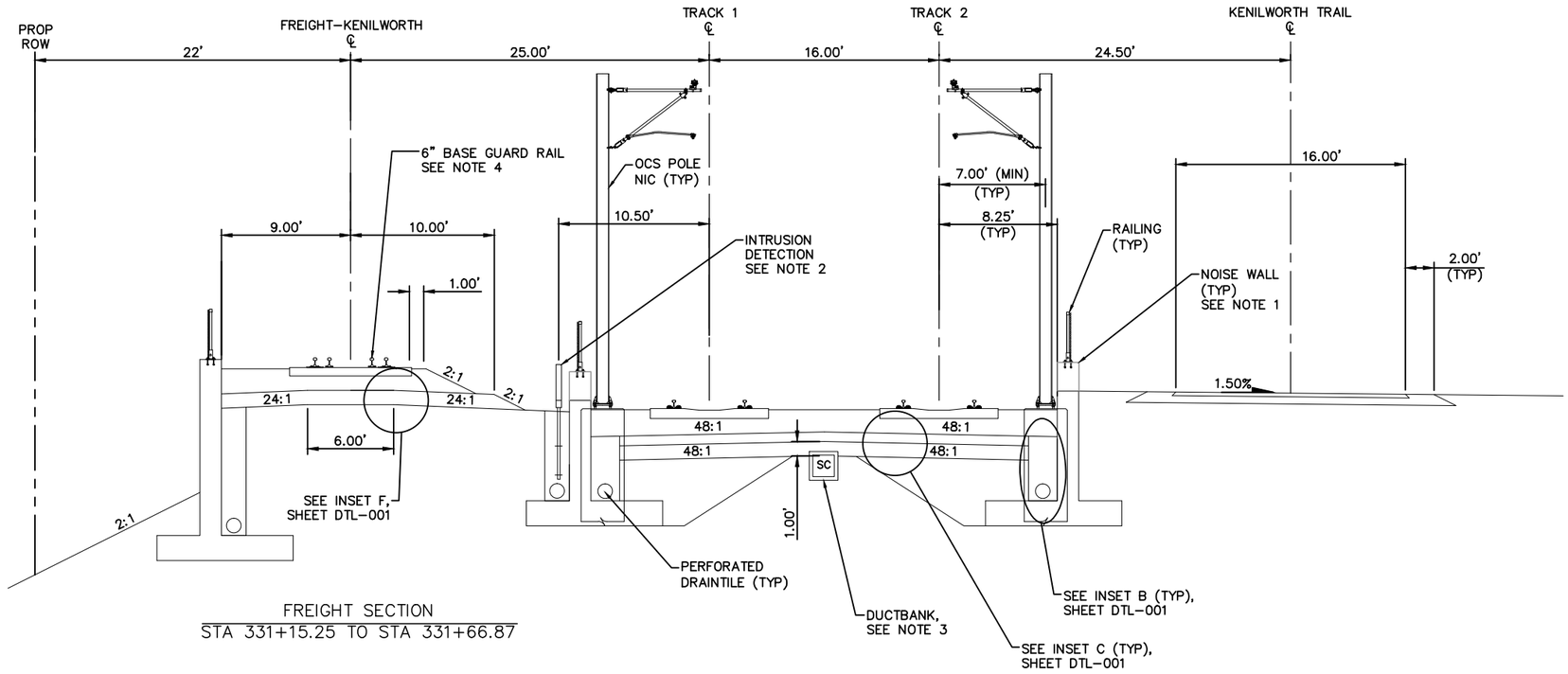

FREIGHT SECTION
STA 331+15.25 TO STA 331+66.87

TYPICAL SECTION
STA 2801+20.00 TO STA 2801+78.25

SCALE 0 2.5 5 10 IN FEET

NO.	DATE	BY	CHECK	DESIGN	REVISION / SUBMITTAL

AECOM

90% SUBMISSION - 01/22/16

METROPOLITAN COUNCIL

SOUTHWEST Green Line LRT Extension

CIVIL - VOLUME 3B
TRACK
TYPICAL SECTIONS

DISCIPLINE: TRACK

SHEET NAME: E3-TRK-TYP - 023

SHEET 152 OF 420

Jan, 18 2016 07:38 am V:\3400_ADC\CAD\00_EAST\PLANSHEETS\TRACK\E3-TRK-TYP.dwg By: V-RasulL

NOTES:
1. MnDOT BRIDGE R0693. SEE STRUCTURAL PLANS.
2. MnDOT BRIDGE R0694. SEE STRUCTURAL PLANS.
3. MnDOT BRIDGE R0695. SEE STRUCTURAL PLANS.
4. SEE SYSTEMS PLANS FOR DUCTBANK AND CABLE TROUGH DETAILS.
5. FOR GUARD RAIL LIMITS SEE TRACK CHARTS.

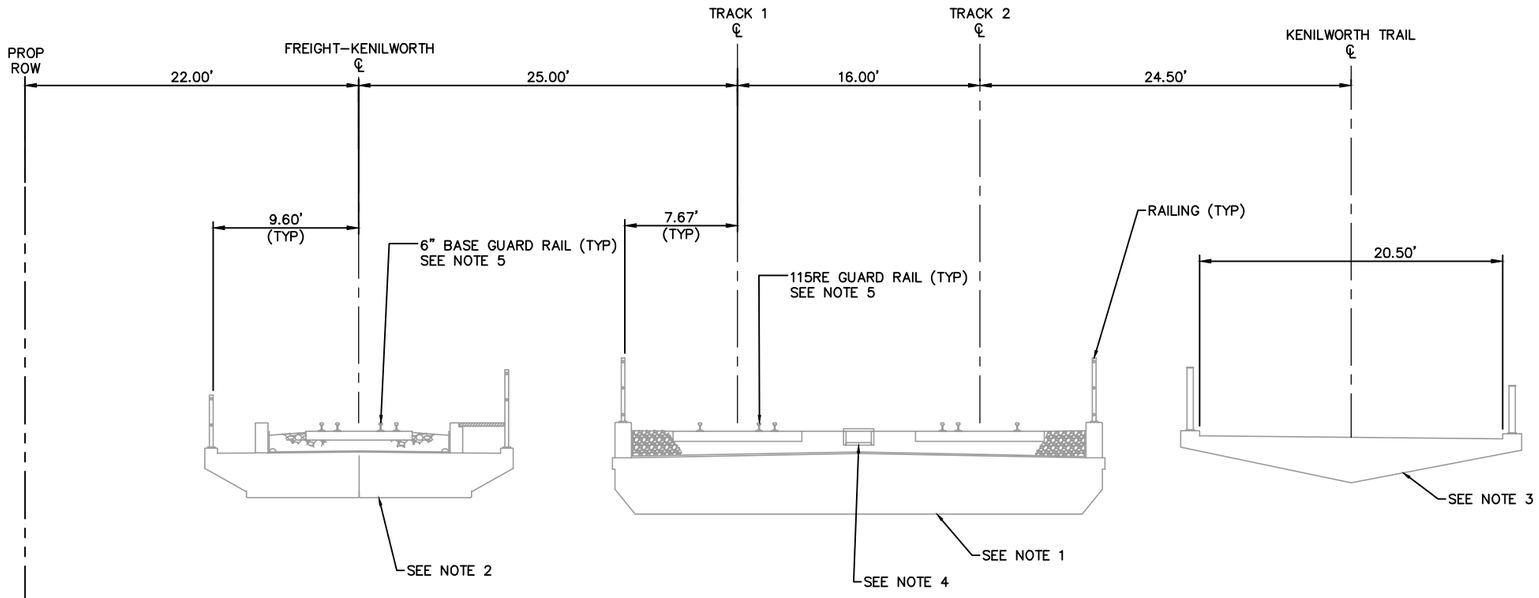

FREIGHT SECTION
STA 331+66.87 TO STA 333+05.12

CEDAR LAKE CHANNEL

TYPICAL SECTION
STA 2801+78.25 TO STA 2803+03.25

SCALE 0 2.5 5 10 IN FEET

NO.	DATE	BY	CHECK	DESIGN	REVISION / SUBMITTAL

AECOM

90% SUBMISSION - 01/22/16

METROPOLITAN COUNCIL

SOUTHWEST Green Line LRT Extension

CIVIL - VOLUME 3B
TRACK
TYPICAL SECTIONS

DISCIPLINE: TRACK

SHEET NAME: E3-TRK-TYP - 024

SHEET 153 OF 420

Jan, 18 2016 07:39 am V:\3400_ADC\CAD\00_EAST\PLANSHEETS\TRACK\E3-TRK-TYP.dwg By: V-RosulL

NOTES:
1. TRACK CENTERS VARY IN CURVE E3–205. SEE TRACK PLANS.
2. FOR DITCH INVERT AND DETAILS, SEE DRAINAGE PLANS.
3. SEE SYSTEM PLANS FOR INTRUSION DETECTION DETAILS.
4. SEE RETAINING WALL PLANS FOR DETAILS.
5. FOR GUARD RAIL LIMITS SEE TRACK CHARTS.
6. SEE SYSTEMS PLANS FOR DUCTBANK AND CABLE TROUGH DETAILS.
7. SEE URBAN DESIGN PLANS FOR FENCE LOCATION AND DETAILS.

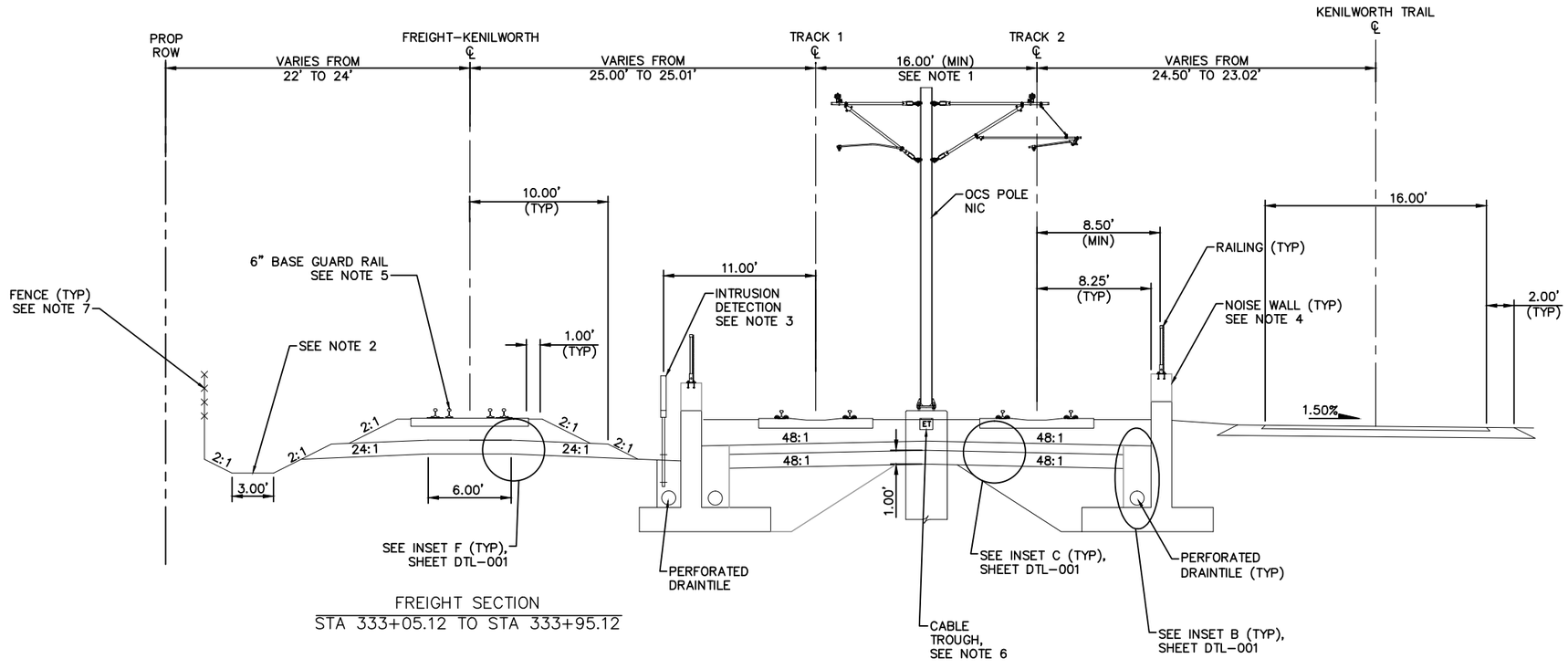

FREIGHT SECTION
STA 333+05.12 TO STA 333+95.12

TYPICAL SECTION
STA 2803+03.25 TO STA 2804+00.00

SCALE 0 2.5 5 10 IN FEET

NO.	DATE	BY	CHECK	DESIGN	REVISION / SUBMITTAL

AECOM

90% SUBMISSION - 01/22/16

METROPOLITAN COUNCIL

SOUTHWEST Green Line LRT Extension

CIVIL - VOLUME 3B
TRACK
TYPICAL SECTIONS

DISCIPLINE: TRACK

SHEET NAME: E3-TRK-TYP - 025

SHEET 154 OF 420

Jan, 18 2016 07:39 am V:\3400_ADC\CAD\00_EAST\PLANSHEETS\TRACK\E3-TRK-TYP.dwg By: V-RasulL

NOTES:
1. TRACK CENTERS NARROWS FROM 16.00' TO 15.91' BETWEEN STA 2804+00.00 AND STA 2805+99.96.
2. SEE RETAINING WALL PLANS FOR DETAILS.
3. SEE SYSTEM PLANS FOR INTRUSION DETECTION DETAILS.
4. FOR DITCH INVERT AND DETAILS, SEE DRAINAGE PLANS.
5. SEE SYSTEMS PLANS FOR DUCTBANK AND CABLE TROUGH DETAILS.
6. SEE URBAN DESIGN PLANS FOR FENCE LOCATION AND DETAILS.
7. WALL STARTS AT STA 2804+24.91.

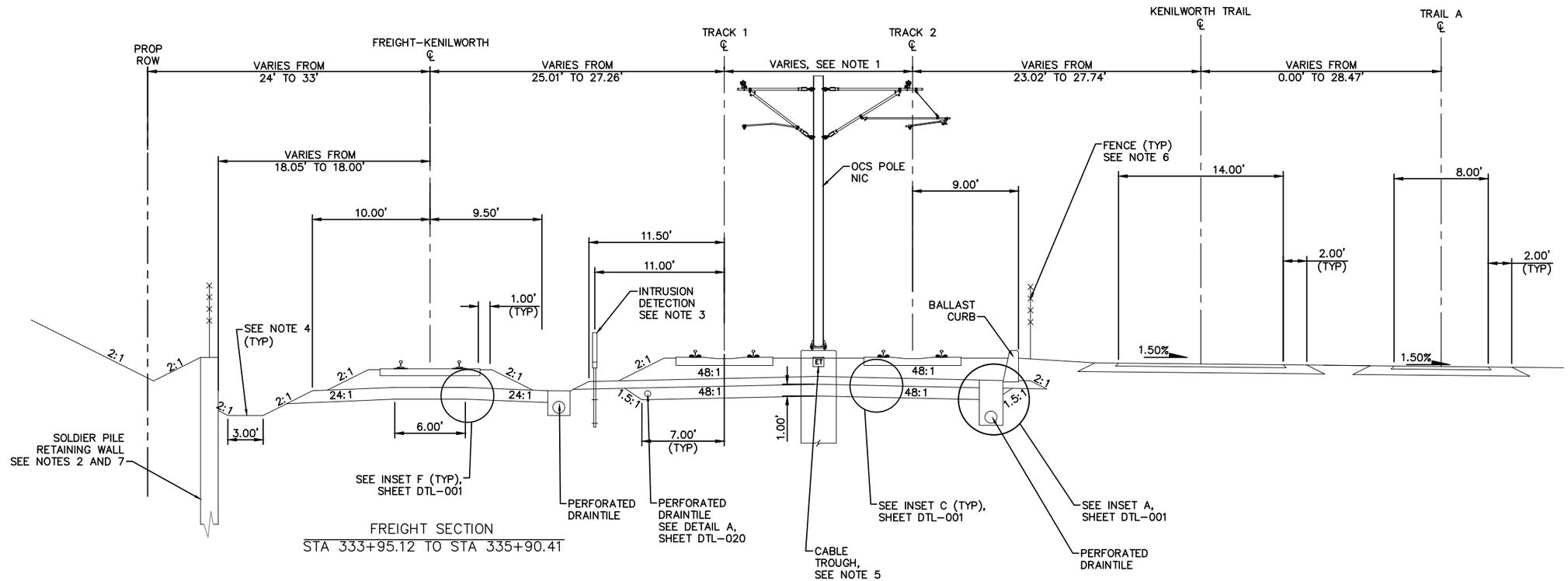

FREIGHT SECTION
STA 333+95.12 TO STA 335+90.41

TYPICAL SECTION
STA 2804+00.00 TO STA 2805+99.96

SCALE 0 2.5 5 10 IN FEET

NO.	DATE	BY	CHECK	DESIGN	REVISION / SUBMITTAL

AECOM

90% SUBMISSION - 01/22/16

METROPOLITAN COUNCIL

SOUTHWEST Green Line LRT Extension

CIVIL - VOLUME 3B
TRACK
TYPICAL SECTIONS

DISCIPLINE: TRACK

SHEET NAME: E3-TRK-TYP - 026

SHEET 155 OF 420

Jan, 18 2016 07:39 am V:\3400_ADC\CAD\00_EAST\PLANSHEETS\TRACK\E3-TRK-TYP.dwg By: V-RasulL

NOTES:
1. TRACK CENTERS NARROW FROM 15.90' TO 15.88' BETWEEN STA 2805+99.96 AND STA 2806+19.80.
2. SEE RETAINING WALL PLANS FOR DETAILS.
3. SEE SYSTEM PLANS FOR INTRUSION DETECTION DETAILS.
4. FOR DITCH INVERT AND DETAILS, SEE DRAINAGE PLANS.
5. SEE SYSTEMS PLANS FOR DUCTBANK AND CABLE TROUGH DETAILS.
6. SEE URBAN DESIGN PLANS FOR FENCE LOCATION AND DETAILS.

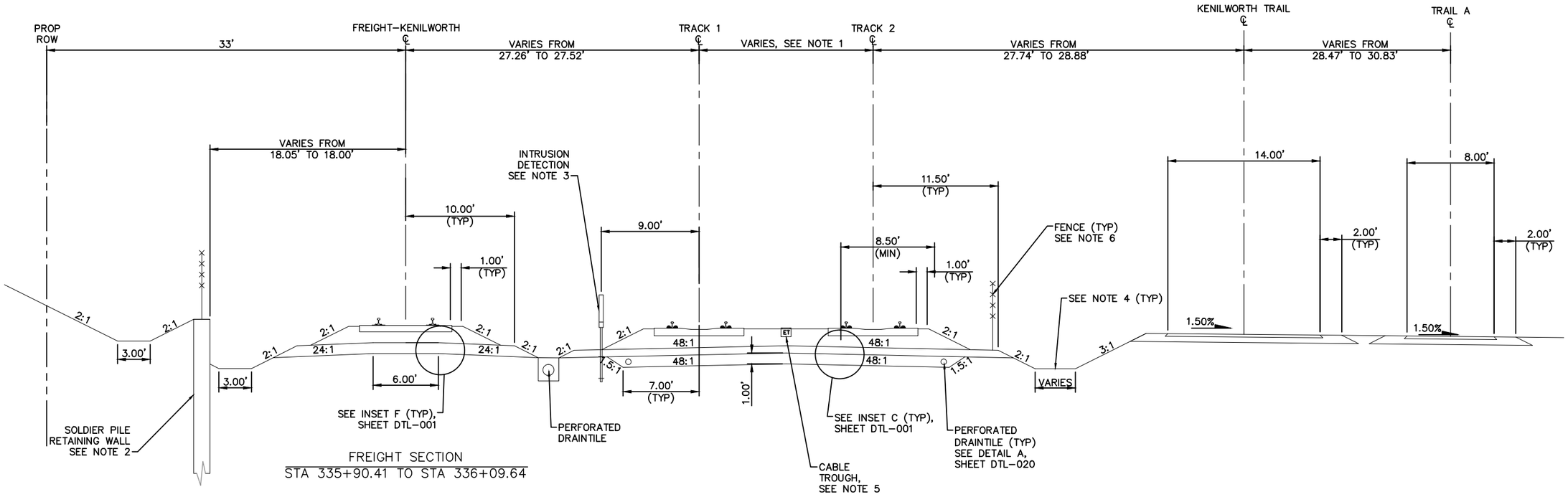

FREIGHT SECTION
STA 335+90.41 TO STA 336+09.64

TYPICAL SECTION
STA 2805+99.96 TO STA 2806+19.80

SCALE 0 2.5 5 10 IN FEET

NO.	DATE	BY	CHECK	DESIGN	REVISION / SUBMITTAL

AECOM

90% SUBMISSION - 01/22/16

METROPOLITAN COUNCIL

SOUTHWEST Green Line LRT Extension

CIVIL - VOLUME 3B
TRACK
TYPICAL SECTIONS

DISCIPLINE: TRACK

SHEET NAME: E3-TRK-TYP - 027

SHEET 156 OF 420

Jan, 18 2016 07:40 am V:\3400_ADC\CAD\00_EAST\PLANSHEETS\TRACK\E3-TRK-TYP.dwg By: V-RasulL

NOTES:
1. TRACK CENTERS NARROW FROM 15.88' TO 14.01' BETWEEN STA 2806+19.80 AND STA 2812+09.97.
2. SEE SYSTEM PLANS FOR INTRUSION DETECTION DETAILS.
3. FOR DITCH INVERT AND DETAILS, SEE DRAINAGE PLANS.
4. SEE SYSTEMS PLANS FOR DUCTBANK AND CABLE TROUGH DETAILS.
5. SEE URBAN DESIGN PLANS FOR FENCE LOCATION AND DETAILS.

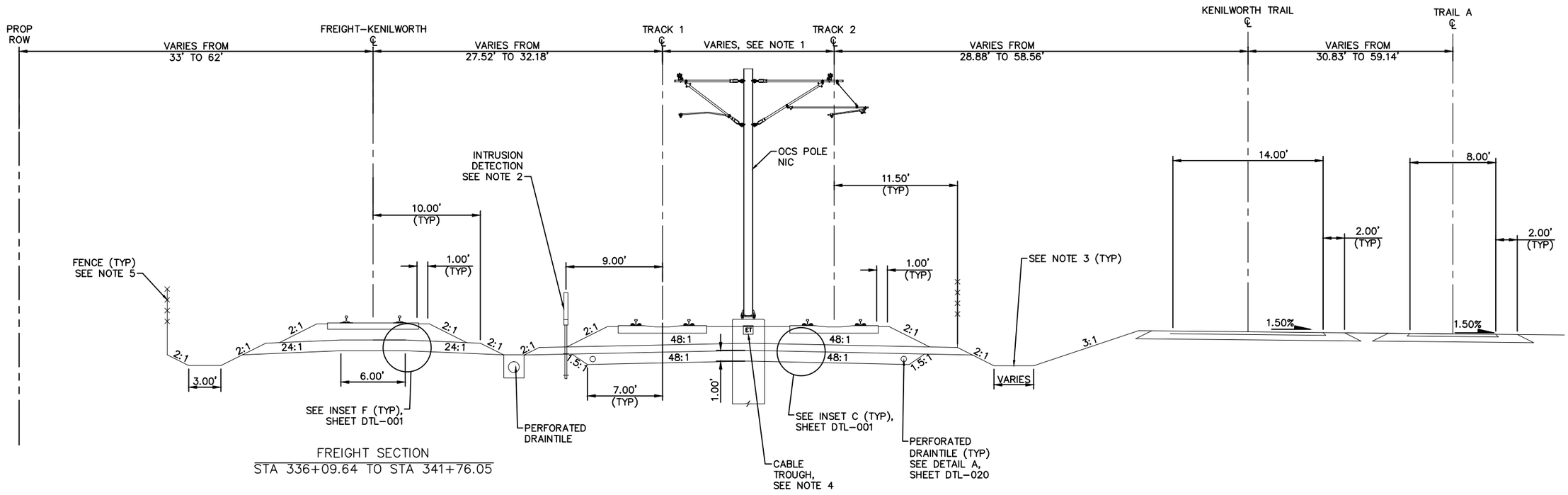

FREIGHT SECTION
STA 336+09.64 TO STA 341+76.05

TYPICAL SECTION
STA 2806+19.80 TO STA 2812+09.97

SCALE 0 2.5 5 10 IN FEET

NO.	DATE	BY	CHECK	DESIGN	REVISION / SUBMITTAL

AECOM

90% SUBMISSION - 01/22/16

METROPOLITAN COUNCIL

SOUTHWEST Green Line LRT Extension

CIVIL - VOLUME 3B
TRACK
TYPICAL SECTIONS

DISCIPLINE: TRACK

SHEET NAME: E3-TRK-TYP - 028

SHEET 157 OF 420

Jan, 18 2016 07:40 am V:\3400_ADC\CAD\00_EAST\PLANSHEETS\TRACK\E3-TRK-TYP.dwg By: V-RasulL

NOTES:
1. TRACK CENTERS NARROWS FROM 14.01' TO 14.00' BETWEEN STA 2812+10.1 AND STA 2812+39.70.
2. SEE SYSTEM PLANS FOR INTRUSION DETECTION DETAILS.
3. FOR DITCH INVERT AND DETAILS, SEE DRAINAGE PLANS.
4. SEE URBAN DESIGN PLANS FOR FENCE LOCATION AND DETAILS.
5. SEE STRUCTURAL PLANS FOR PROPOSED PIER PROTECTION DETAILS.
6. SEE SYSTEMS PLANS FOR DUCTBANK AND CABLE TROUGH DETAILS.

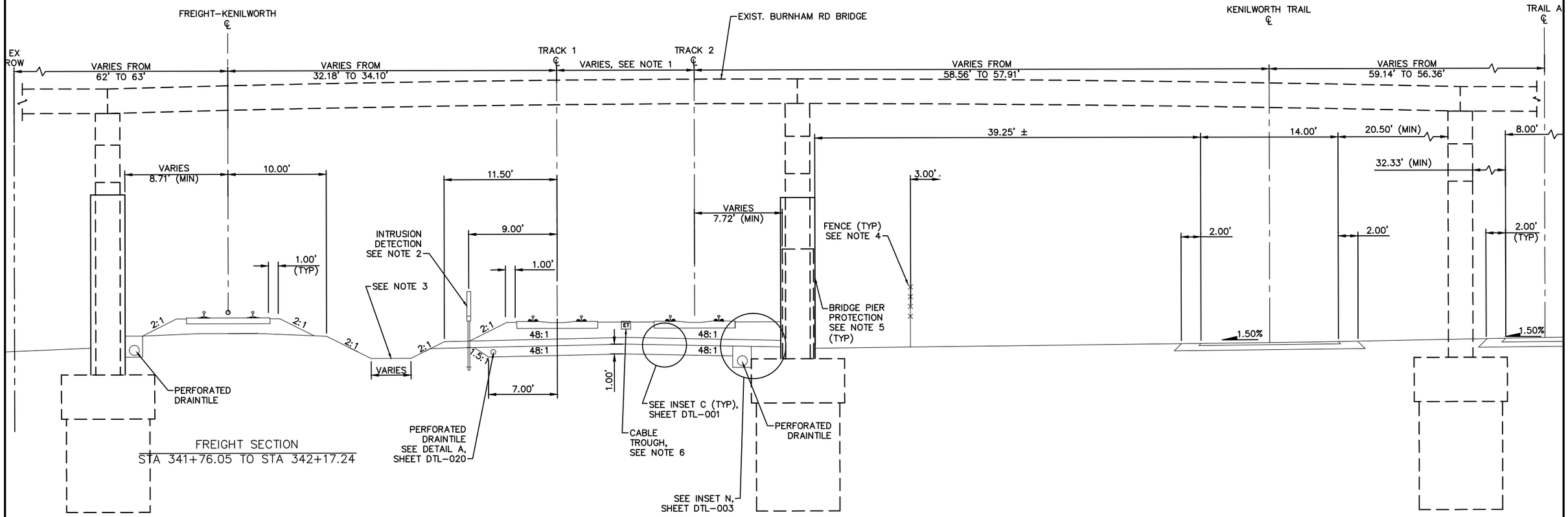

FREIGHT SECTION
STA 341+76.05 TO STA 342+17.24

TYPICAL SECTION
STA 2812+09.97 TO STA 2812+51.63

SCALE 0 2.5 5 10 IN FEET

NO.	DATE	BY	CHECK	DESIGN	REVISION / SUBMITTAL

AECOM

90% SUBMISSION - 01/22/16

METROPOLITAN COUNCIL

SOUTHWEST Green Line LRT Extension

CIVIL - VOLUME 3B
TRACK
TYPICAL SECTIONS

DISCIPLINE: TRACK

SHEET NAME: E3-TRK-TYP - 029

SHEET 158 OF 420

Jan, 18 2016 07:40 am V:\3400_ADC\CAD\00_EAST\PLANSHEETS\TRACK\E3-TRK-TYP.dwg By: V-RasulL

NOTES:
1. SEE SYSTEM PLANS FOR INTRUSION DETECTION DETAILS.
2. FOR DITCH INVERT AND DETAILS, SEE DRAINAGE PLANS.
3. SEE SYSTEMS PLANS FOR DUCTBANK AND CABLE TROUGH DETAILS.
4. SEE URBAN DESIGN PLANS FOR FENCE LOCATION AND DETAILS.

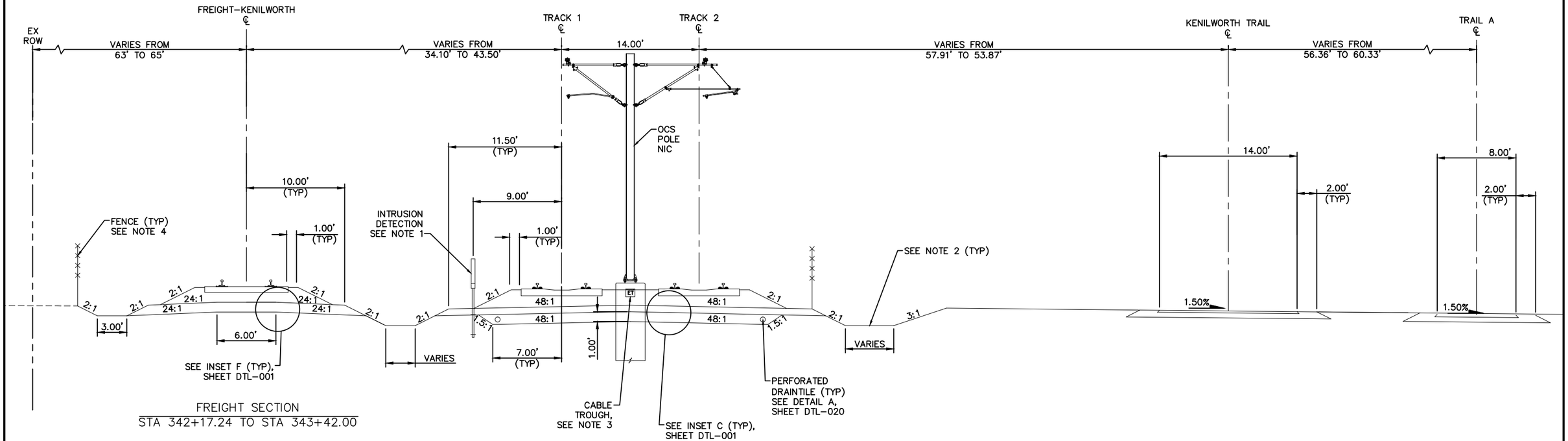

FREIGHT SECTION
STA 342+17.24 TO STA 343+42.00

TYPICAL SECTION
STA 2812+51.63 TO STA 2813+68.99

SCALE 0 2.5 5 10 IN FEET

NO.	DATE	BY	CHECK	DESIGN	REVISION / SUBMITTAL

AECOM

90% SUBMISSION - 01/22/16

METROPOLITAN COUNCIL

SOUTHWEST Green Line LRT Extension

CIVIL - VOLUME 3B
TRACK
TYPICAL SECTIONS

DISCIPLINE: TRACK

SHEET NAME: E3-TRK-TYP - 030

SHEET 159 OF 420

Jan, 18 2016 07:41 am V:\3400_ADC\CAD\00_EAST\PLANSHEETS\TRACK\E3-TRK-TYP.dwg By: V-RasulL

NOTES:
1. SEE SYSTEM PLANS FOR INTRUSION DETECTION DETAILS.
2. FOR DITCH INVERT AND DETAILS, SEE DRAINAGE PLANS.
3. SEE SYSTEMS PLANS FOR DUCTBANK AND CABLE TROUGH DETAILS.
4. SEE URBAN DESIGN PLANS FOR FENCE LOCATION AND DETAILS.

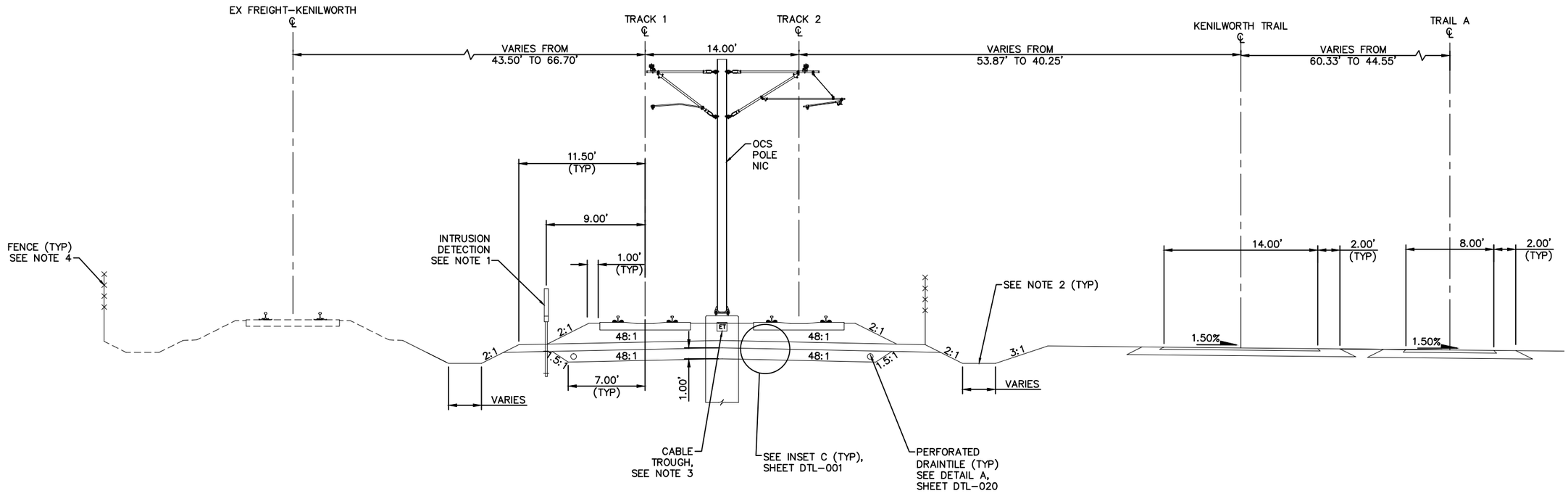

TYPICAL SECTION
STA 2813+68.99 TO STA 2816+35.67

SCALE 0 2.5 5 10 IN FEET

NO.	DATE	BY	CHECK	DESIGN	REVISION / SUBMITTAL

AECOM

90% SUBMISSION - 01/22/16

METROPOLITAN COUNCIL

SOUTHWEST Green Line LRT Extension

CIVIL - VOLUME 3B
TRACK
TYPICAL SECTIONS

DISCIPLINE: TRACK

SHEET NAME: E3-TRK-TYP - 031

SHEET 160 OF 420

Jan, 18 2016 07:41 am V:\3400_ADC\CAD\00_EAST\PLANSHEETS\TRACK\E3-TRK-TYP.dwg By: V-RasulL

NOTES:
1. TRACK CENTERS WIDEN FROM 14.00' TO 20.00' BETWEEN STA 2816+35.67 AND STA 2818+01.44.
2. SEE SYSTEMS PLANS FOR DUCTBANK AND CABLE TROUGH DETAILS.
3. FOR DITCH INVERT AND DETAILS, SEE DRAINAGE PLANS.
4. SEE URBAN DESIGN PLANS FOR FENCE LOCATION AND DETAILS.

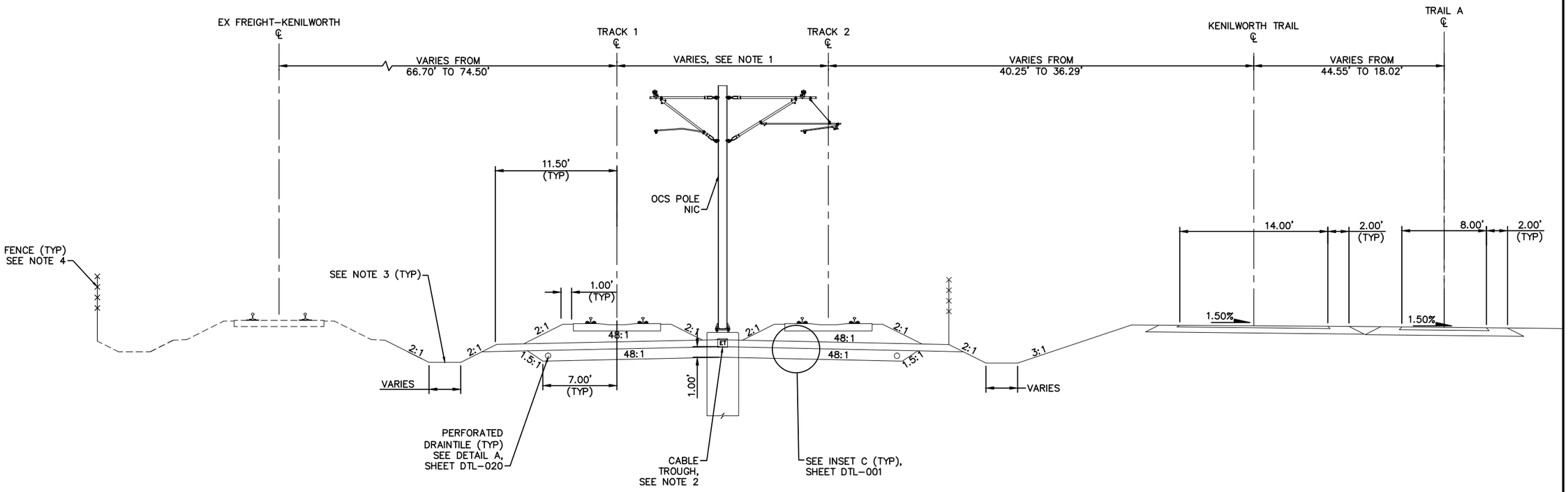

TYPICAL SECTION
STA 2816+35.67 TO STA 2818+01.44

SCALE: 0 2.5 5 10 IN FEET

NO.	DATE	BY	CHECK	DESIGN	REVISION / SUBMITTAL

AECOM

90% SUBMISSION - 01/22/16

METROPOLITAN COUNCIL

SOUTHWEST Green Line LRT Extension

CIVIL - VOLUME 3B
TRACK
TYPICAL SECTIONS

DISCIPLINE: TRACK

SHEET NAME: E3-TRK-TYP - 032

SHEET 161 OF 420

Jan, 18 2016 07:41 am V:\3400_ADC\CAD\00_EAST\PLANSHEETS\TRACK\E3-TRK-TYP.dwg By: V-RasulL

NOTES:
1. TRACK CENTERS WIDEN FROM 20.00' TO 26.32' BETWEEN STA 2818+01.44 AND STA 2818+99.96.
2. SEE SYSTEMS PLANS FOR DUCTBANK AND CABLE TROUGH DETAILS.
3. FOR DITCH INVERT AND DETAILS, SEE DRAINAGE PLANS.
4. SEE URBAN DESIGN PLANS FOR FENCE LOCATION AND DETAILS.

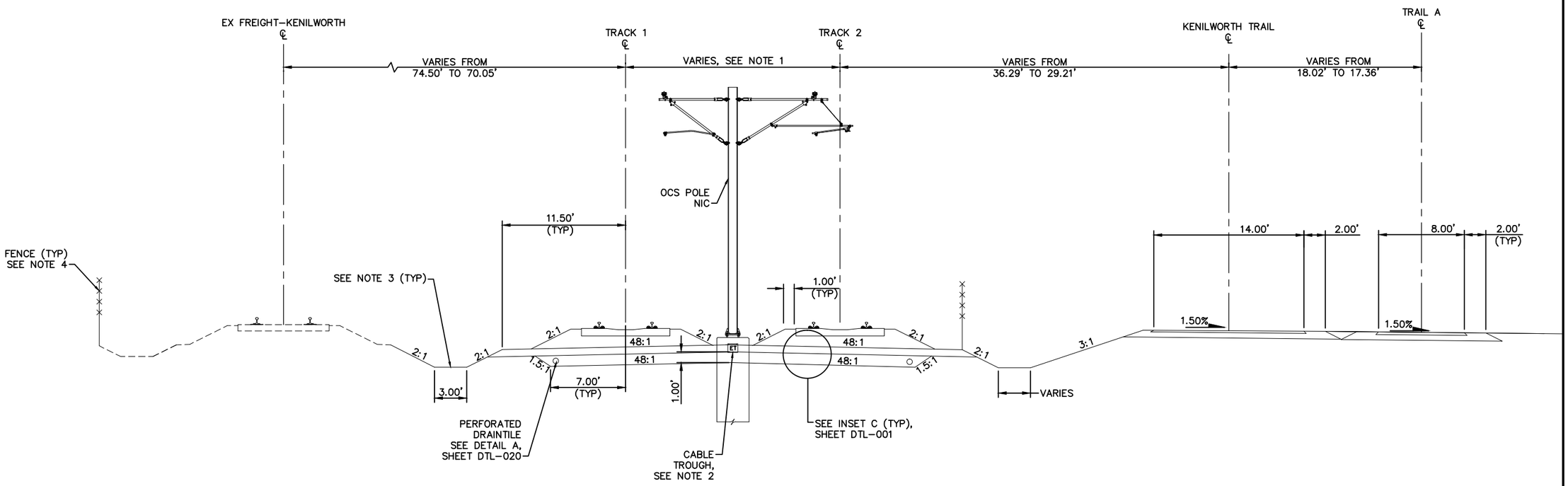

TYPICAL SECTION
STA 2818+01.44 TO STA 2818+99.96

SCALE 0 2.5 5 10 IN FEET

NO.	DATE	BY	CHECK	DESIGN	REVISION / SUBMITTAL

AECOM

90% SUBMISSION - 01/22/16

METROPOLITAN COUNCIL

SOUTHWEST Green Line LRT Extension

CIVIL - VOLUME 3B
TRACK
TYPICAL SECTIONS

DISCIPLINE: TRACK

SHEET NAME: E3-TRK-TYP - 033

SHEET 162 OF 420

Jan. 18 2016 07:42 am V:\3400_ADC\CAD\00_EAST\PLANSHEETS\TRACK\E3-TRK-TYP.dwg By: V-RasulL

NOTES:
1. TRACK CENTERS WIDEN FROM 26.32' TO 30.38' BETWEEN STA 2818+99.96 AND STA 2820+68.77.
2. SEE SYSTEM PLANS FOR INTRUSION DETECTION DETAILS.
3. SELECT GRANULAR DEPTH: STA 2818+99.96 TO STA 2820+72.00: 1.00'; STA 2821+02.51: 2.50'. TRANSITION LINEARLY BETWEEN STA 2820+72.00 AND STA 2821+02.51.
4. TRANSITION FROM 7.00' TO 8.50' BETWEEN STA 2820+77.00 AND STA 2821+02.51.
5. SEE SYSTEMS PLANS FOR DUCTBANK AND CABLE TROUGH DETAILS.
6. SEE URBAN DESIGN PLANS FOR FENCE LOCATION AND DETAILS.
7. FOR DITCH INVERT AND DETAILS, SEE DRAINAGE PLANS.

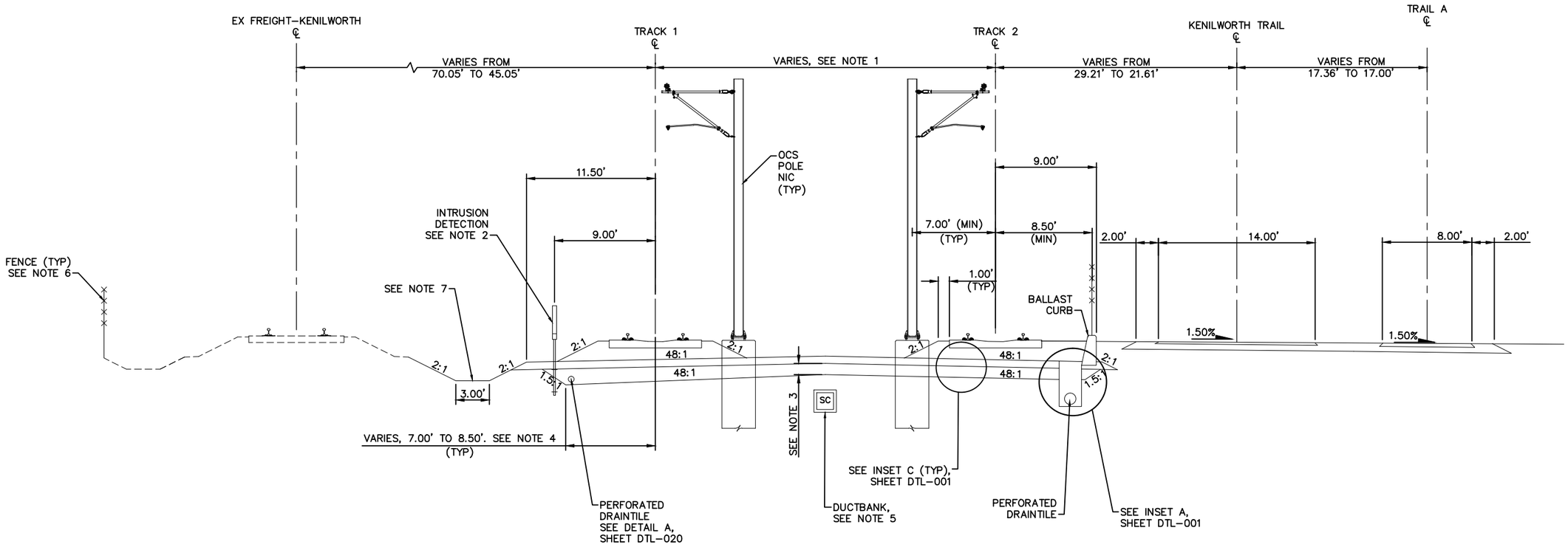

TYPICAL SECTION
STA 2818+99.96 TO STA 2821+02.51

SCALE 0 2.5 5 10 IN FEET

NO.	DATE	BY	CHECK	DESIGN	REVISION / SUBMITTAL

AECOM

90% SUBMISSION - 01/22/16

METROPOLITAN COUNCIL

SOUTHWEST Green Line LRT Extension

CIVIL - VOLUME 3B
TRACK
TYPICAL SECTIONS

DISCIPLINE: TRACK

SHEET NAME: E3-TRK-TYP - 034

SHEET 163 OF 420

Jan, 18 2016 07:42 am V:\3400_ADC\CAD\00_EAST\PLANSHEETS\TRACK\E3-TRK-TYP.dwg By: V-RasulL

NOTES:
1. SEE STA TION PLANS FOR STA TION PLATFORM DETAILS.
2. SEE SYSTEM PLANS FOR INTRUSION DETECTION DETAILS.
3. FOR DITCH INVERT AND DETAILS, SEE DRAINAGE PLANS.
4. SEE SYSTEMS PLANS FOR DUCTBANK AND CABLE TROUGH DETAILS.
5. SEE URBAN DESIGN PLANS FOR FENCE LOCATION AND DETAILS.

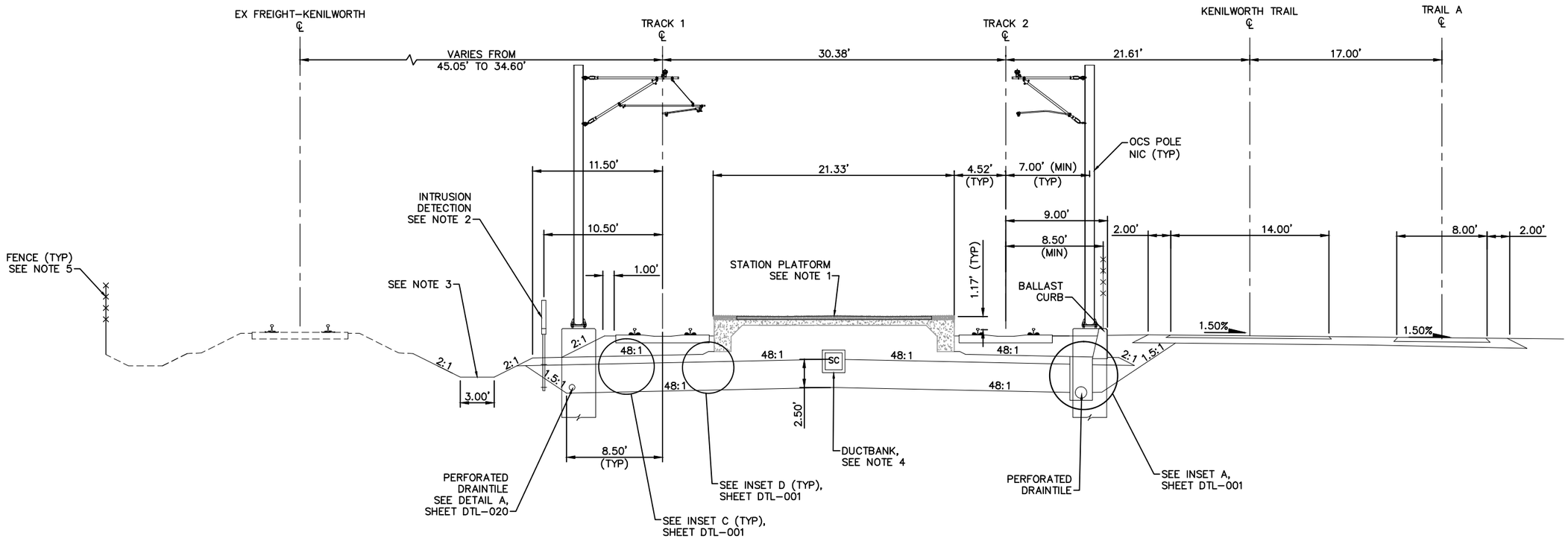

TYPICAL SECTION – 21ST STREET STATION
STA 2821+02.51 TO STA 2822+00.00

SCALE 0 2.5 5 10 IN FEET

NO.	DATE	BY	CHECK	DESIGN	REVISION / SUBMITTAL

AECOM

90% SUBMISSION - 01/22/16

METROPOLITAN COUNCIL

SOUTHWEST Green Line LRT Extension

CIVIL - VOLUME 3B
TRACK
TYPICAL SECTIONS

DISCIPLINE: TRACK

SHEET NAME: E3-TRK-TYP - 035

SHEET 164 OF 420

Jan, 18 2016 07:42 am V:\3400_ADC\CAD\00_EAST\PLANSHEETS\TRACK\E3-TRK-TYP.dwg By: V-RasulL

NOTES:
1. SEE STA TION PLANS FOR STA TION PLATFORM DETAILS.
2. SEE SYSTEM PLANS FOR INTRUSION DETECTION DETAILS.
3. FOR DITCH INVERT AND DETAILS, SEE DRAINAGE PLANS.
4. SEE SYSTEMS PLANS FOR DUCTBANK AND CABLE TROUGH DETAILS.
5. SEE URBAN DESIGN PLANS FOR FENCE LOCATION AND DETAILS.

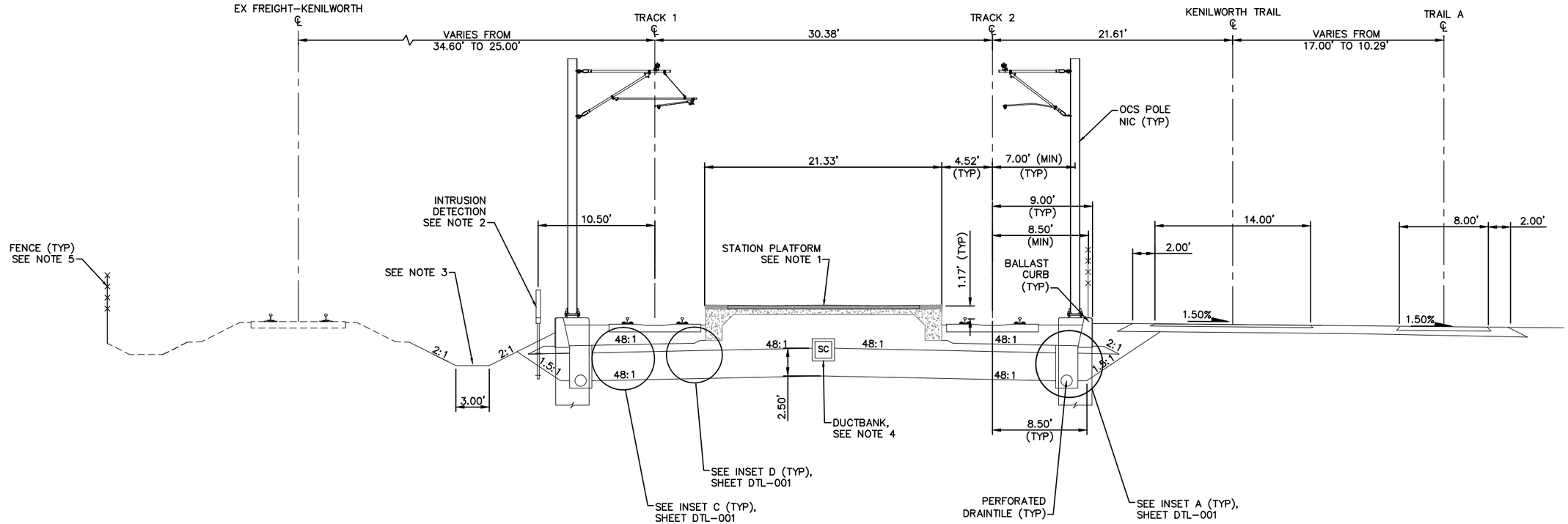

TYPICAL SECTION – 21ST STREET STATION
STA 2822+00.00 TO STA 2823+72.51

SCALE 0 2.5 5 10 IN FEET

NO.	DATE	BY	CHECK	DESIGN	REVISION / SUBMITTAL

AECOM

90% SUBMISSION - 01/22/16

METROPOLITAN COUNCIL

SOUTHWEST Green Line LRT Extension

CIVIL - VOLUME 3B
TRACK
TYPICAL SECTIONS

DISCIPLINE: TRACK

SHEET NAME: E3-TRK-TYP - 036

SHEET 165 OF 420

Jan, 18 2016 07:43 am v:\3400_ADC\CAD\00_EAST\PLANSHEETS\TRACK\E3-TRK-TYP.dwg By: V-RasulL

NOTES:
1. SECTION DOES NOT ILLUSTRATE GRADE CROSSING AT W 21ST ST. SEE TRACK PLANS AND DETAILS.
2. SEE SYSTEM PLANS FOR INTRUSION DETECTION DETAILS.
3. SELECT GRANULAR DEPTH: STA 2823+72.51: 2.50'; STA 2824+03.00 TO STA 2825+00.00: 1.00'. TRANSITION LINEARLY BETWEEN STA 2823+72.51 AND STA 2824+03.00.
4. TRANSITION FROM 8.50' TO 7.00' BETWEEN STA 2823+72.51 AND STA 2824+03.00.
5. SEE SYSTEMS PLANS FOR DUCTBANK AND CABLE TROUGH DETAILS.
6. SEE URBAN DESIGN PLANS FOR FENCE LOCATION AND DETAILS.
7. SECTION DOES NOT ILLUSTRATE PROPOSED WORK ON FREIGHT–KENILWORTH TRACK AT W 21ST ST. SEE TRACK PLANS AND DETAILS.

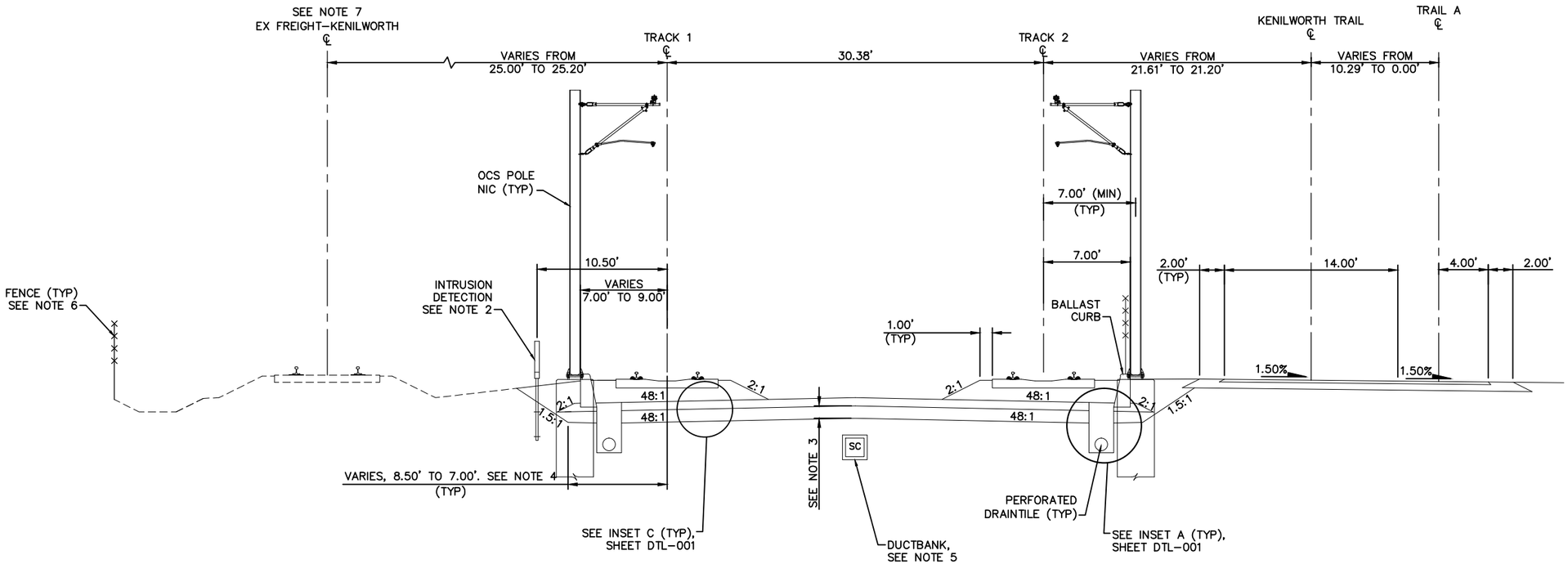

TYPICAL SECTION
STA 2823+72.51 TO STA 2825+00.00

0 2.5 5 10
SCALE IN FEET

NO.	DATE	BY	CHECK	DESIGN	REVISION / SUBMITTAL

AECOM

90% SUBMISSION - 01/22/16

METROPOLITAN COUNCIL

SOUTHWEST Green Line LRT Extension

CIVIL - VOLUME 3B
TRACK
TYPICAL SECTIONS

SHEET 166 OF 420

DISCIPLINE: TRACK

SHEET NAME: E3-TRK-TYP - 037

Jan, 18 2016 07:43 am V:\3400_ADC\CAD\00_EAST\PLANSHEETS\TRACK\E3-TRK-TYP.dwg By: V-RasulL

NOTES:
1. TRACK CENTERS NARROW FROM 30.38' TO 30.37' FROM STA 2825+00.00 TO 2826+32.56.
2. SEE RETAINING WALL PLANS FOR DETAILS.
3. SEE SYSTEM PLANS FOR INTRUSION DETECTION DETAILS.
4. RETAINING WALL FROM STA 2825+26.23 TO STA 2825+91.50.
5. SEE URBAN DESIGN PLANS FOR FENCE LOCATION AND DETAILS.
6. SEE SYSTEMS PLANS FOR DUCTBANK AND CABLE TROUGH DETAILS.

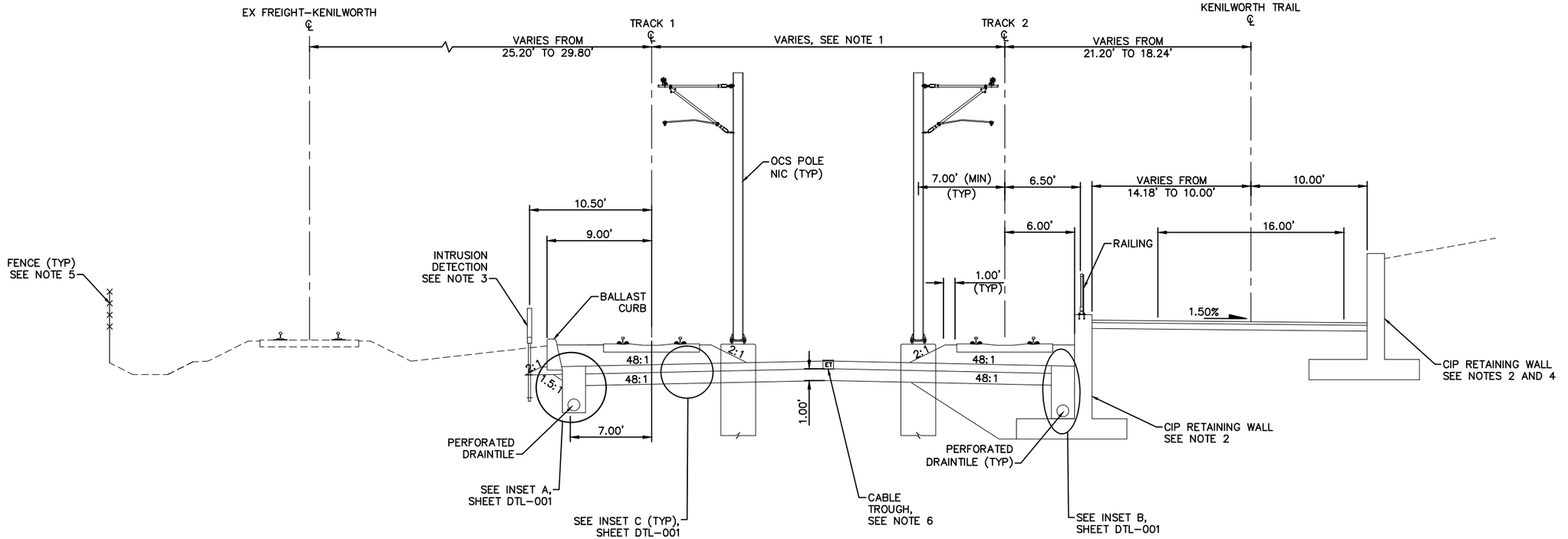

TYPICAL SECTION
STA 2825+00.00 TO STA 2826+40.00

SCALE 0 2.5 5 10 IN FEET

NO.	DATE	BY	CHECK	DESIGN	REVISION / SUBMITTAL

AECOM

90% SUBMISSION - 01/22/16

METROPOLITAN COUNCIL

SOUTHWEST Green Line LRT Extension

CIVIL - VOLUME 3B
TRACK
TYPICAL SECTIONS

DISCIPLINE: TRACK

SHEET NAME: E3-TRK-TYP - 038

SHEET 167 OF 420

Jan, 18 2016 07:43 am V:\3400_ADC\CAD\00_EAST\PLANSHEETS\TRACK\E3-TRK-TYP.dwg By: V-RasulL

NOTES:
1. TRACK CENTERS NARROW FROM 30.37' TO 26.67' BETWEEN STA 2826+56.61 AND STA 2628+50.00.
2. SEE SYSTEM PLANS FOR INTRUSION DETECTION DETAILS.
3. SEE URBAN DESIGN PLANS FOR FENCE LOCATION AND DETAILS.
4. FOR DITCH INVERT AND DETAILS, SEE DRAINAGE PLANS.
5. SEE SYSTEMS PLANS FOR DUCTBANK AND CABLE TROUGH DETAILS.

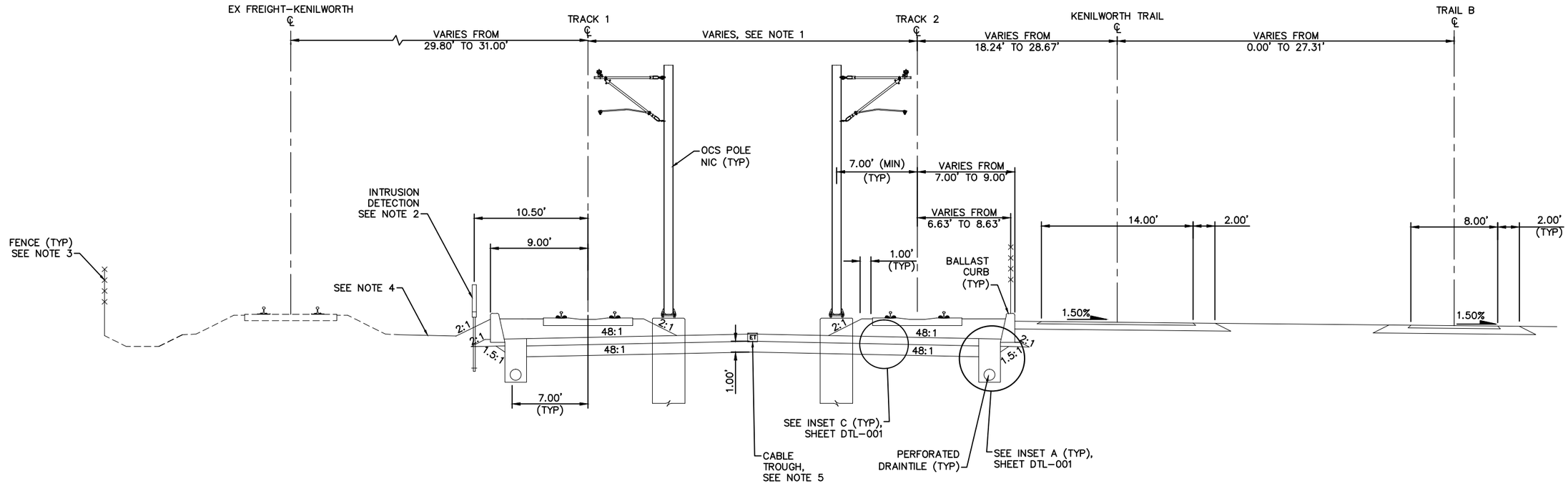

TYPICAL SECTION
STA 2826+40.00 TO STA 2828+50.00

SCALE 0 2.5 5 10 IN FEET

NO.	DATE	BY	CHECK	DESIGN	REVISION / SUBMITTAL

AECOM

90% SUBMISSION - 01/22/16

METROPOLITAN COUNCIL

SOUTHWEST Green Line LRT Extension

CIVIL - VOLUME 3B
TRACK
TYPICAL SECTIONS

DISCIPLINE: TRACK

SHEET NAME: E3-TRK-TYP - 039

SHEET 168 OF 420

Jan, 18 2016 07:44 am v:\3400_ADC\CAD\00_EAST\PLANSHEETS\TRACK\E3-TRK-TYP.dwg By: V-RasulL

NOTES:
1. TRACK CENTERS NARROWS FROM 26.67' TO 21.30' BETWEEN STA 2628+50.00 AND STA 2830+00.00.
2. SEE SYSTEM PLANS FOR INTRUSION DETECTION DETAILS.
3. SEE URBAN DESIGN PLANS FOR FENCE LOCATION AND DETAILS.
4. FOR DITCH INVERT AND DETAILS, SEE DRAINAGE PLANS.
5. SEE SYSTEMS PLANS FOR DUCTBANK AND CABLE TROUGH DETAILS.

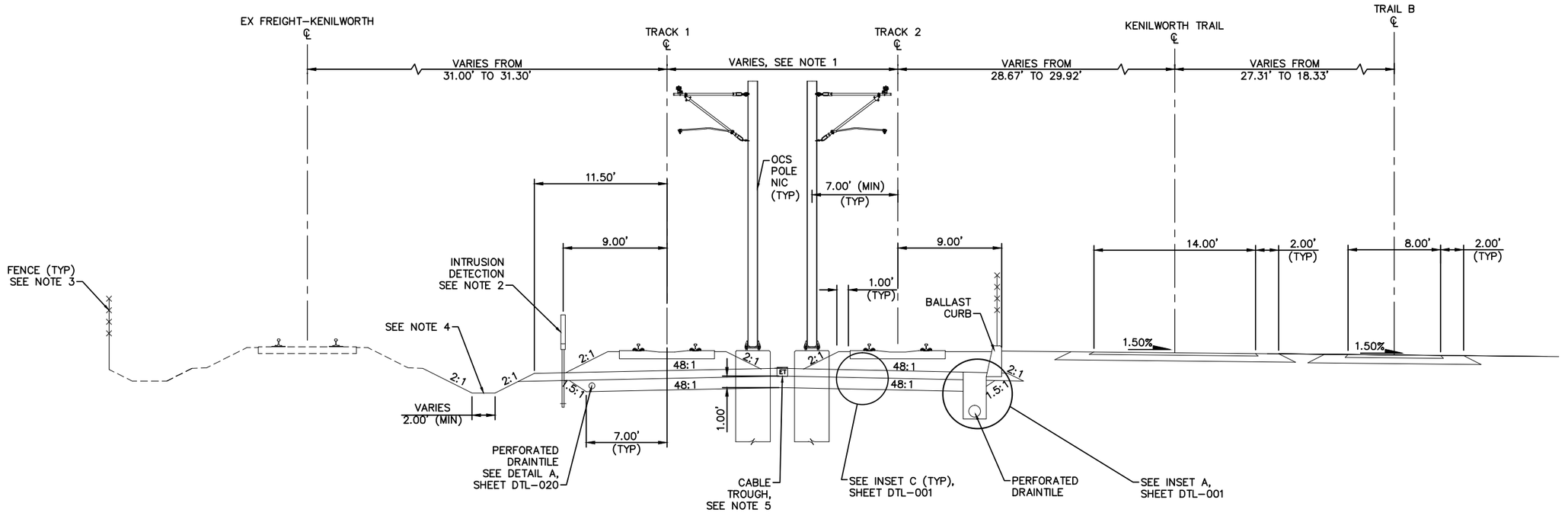

TYPICAL SECTION
STA 2828+50.00 TO STA 2830+00.00

SCALE 0 2.5 5 10 IN FEET

NO.	DATE	BY	CHECK	DESIGN	REVISION / SUBMITTAL

AECOM

90% SUBMISSION - 01/22/16

METROPOLITAN COUNCIL

SOUTHWEST Green Line LRT Extension

CIVIL - VOLUME 3B
TRACK
TYPICAL SECTIONS

DISCIPLINE: TRACK

SHEET NAME: E3-TRK-TYP - 040

SHEET 169 OF 420

Jan. 18 2016 07:44 am V:\3400_ADC\CAD\00_EAST\PLANSHEETS\TRACK\E3-TRK-TYP.dwg By: V-RasulL

NOTES:
1. TRACK CENTERS NARROWS FROM 26.67' TO 20.00' BETWEEN STA 2630+00.00 AND STA 2830+33.74.
2. SEE SYSTEM PLANS FOR INTRUSION DETECTION DETAILS.
3. SELECT GRANULAR DEPTH: STA 2830+00.00 TO STA 2830+13.00: 1.00'; STA 2830+33.74: 2.00'. TRANSITION LINEARLY BETWEEN STA 2830+13.00 AND STA 2830+33.74.
4. TRANSITION FROM 7.00' TO 8.00' BETWEEN STA 2830+13.00 AND 2830+33.74.
5. SEE SYSTEMS PLANS FOR DUCTBANK AND CABLE TROUGH DETAILS.
6. SEE URBAN DESIGN PLANS FOR FENCE LOCATION AND DETAILS.
7. FOR DITCH INVERT AND DETAILS, SEE DRAINAGE PLANS.

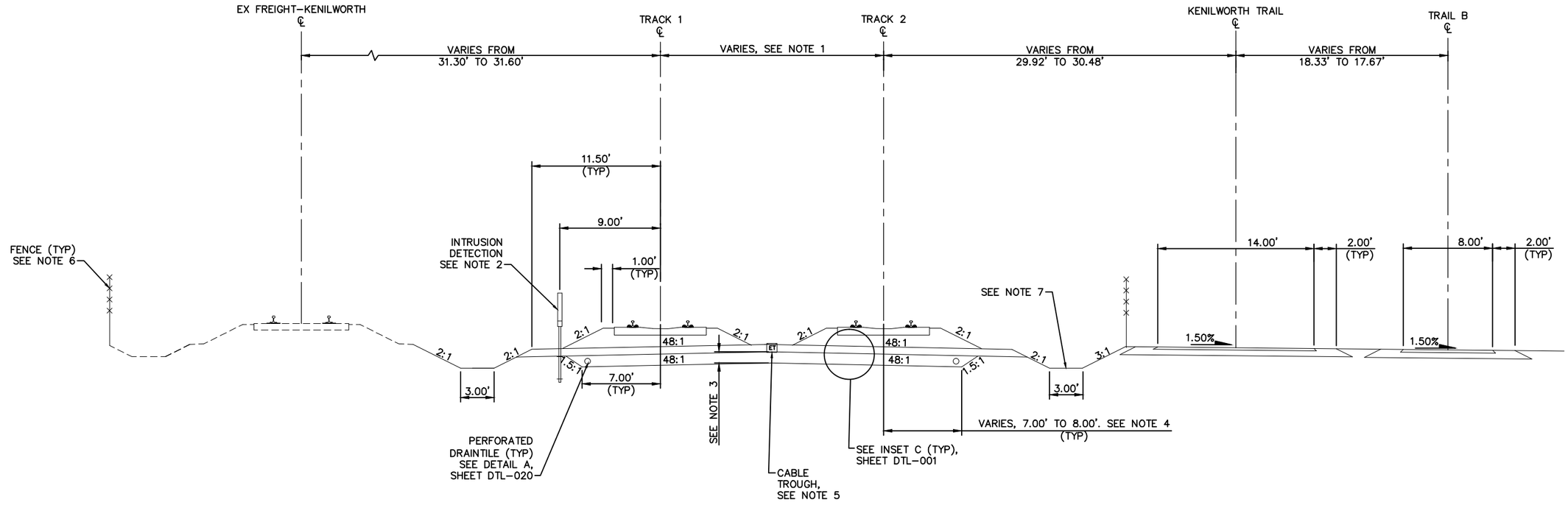

TYPICAL SECTION
STA 2830+00.00 TO STA 2830+33.74

SCALE 0 2.5 5 10 IN FEET

NO.	DATE	BY	CHECK	DESIGN	REVISION / SUBMITTAL

AECOM

90% SUBMISSION - 01/22/16

METROPOLITAN COUNCIL

SOUTHWEST Green Line LRT Extension

CIVIL - VOLUME 3B
TRACK
TYPICAL SECTIONS

SHEET 170 OF 420

DISCIPLINE: TRACK

SHEET NAME: E3-TRK-TYP-041

Jan, 18 2016 07:44 am V:\3400_ADC\CAD\00_EAST\PLANSHEETS\TRACK\E3-TRK-TYP.dwg By: V-RasulL

NOTES:
1. TRACK CENTERS NARROWS FROM 20.00' TO 14.00' BETWEEN STA 2830+33.74 AND STA 2832+83.58.
2. SEE SYSTEM PLANS FOR INTRUSION DETECTION DETAILS.
3. SEE URBAN DESIGN PLANS FOR FENCE LOCATION AND DETAILS.
4. FOR DITCH INVERT AND DETAILS, SEE DRAINAGE PLANS.
5. SEE SYSTEMS PLANS FOR DUCTBANK AND CABLE TROUGH DETAILS.

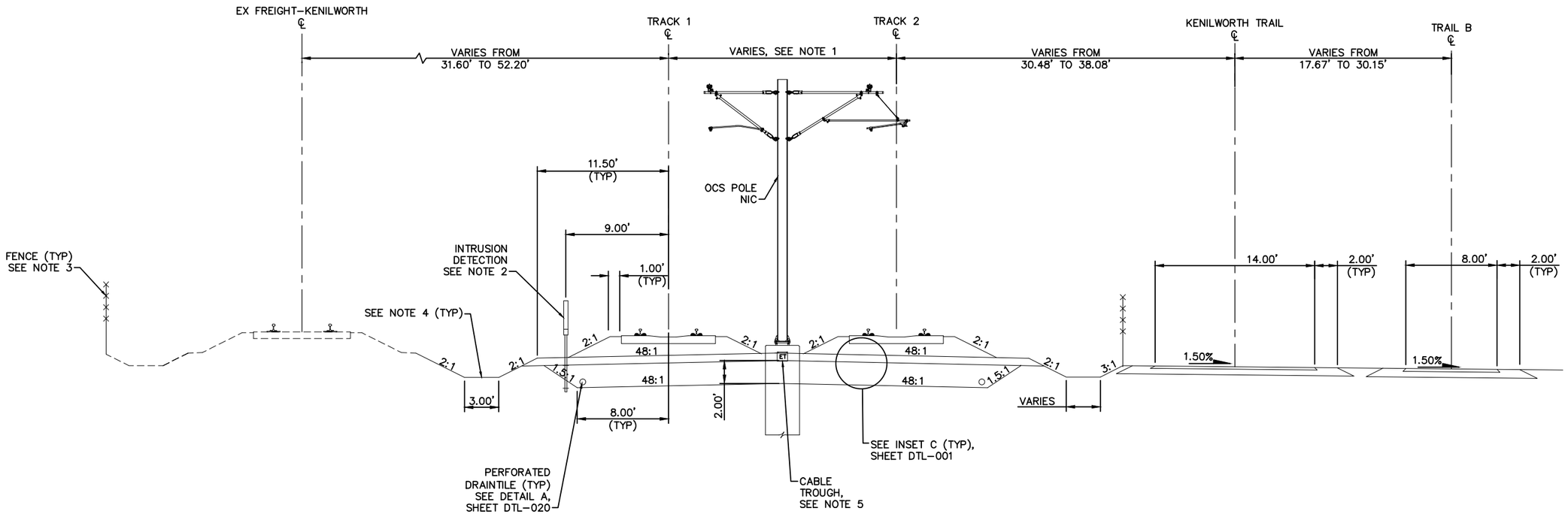

TYPICAL SECTION
STA 2830+33.74 TO STA 2837+00.01
STA 2837+00.01 TO STA 2841+97.38

SCALE 0 2.5 5 10 IN FEET

NO.	DATE	BY	CHECK	DESIGN	REVISION / SUBMITTAL

AECOM

90% SUBMISSION - 01/22/16

METROPOLITAN COUNCIL

SOUTHWEST Green Line LRT Extension

CIVIL - VOLUME 3B
TRACK
TYPICAL SECTIONS

DISCIPLINE: TRACK

SHEET NAME: E3-TRK-TYP-042

SHEET 171 OF 420

Jan, 18 2016 07:45 am V:\3400_ADC\CAD\00_EAST\PLANSHEETS\TRACK\E3-TRK-TYP.dwg By: V-Rasul

NOTES:
1. TRACK CENTERS VARY IN CURVE E4–200. SEE TRACK PLANS.
2. SEE SYSTEMS PLANS FOR DUCTBANK AND CABLE TROUGH DETAILS.
3. FOR DITCH INVERT AND DETAILS, SEE DRAINAGE PLANS.
4. SEE URBAN DESIGN PLANS FOR FENCE LOCATIONS AND DETAILS.

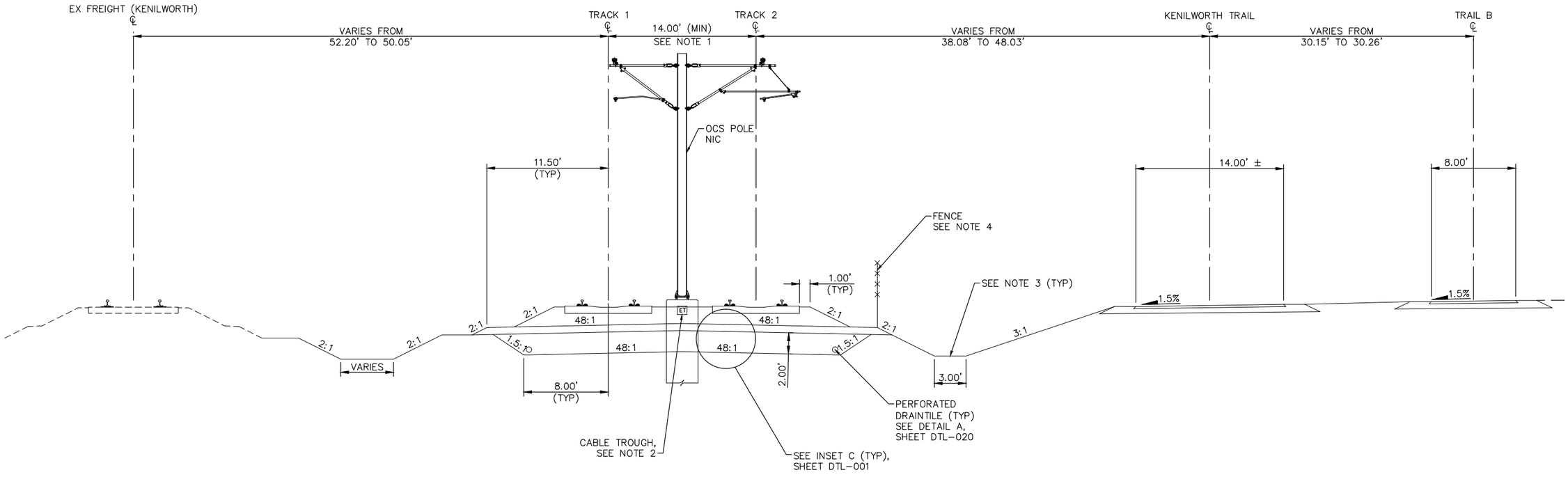

TYPICAL SECTION
STA. 2841+97.38 TO STA. 2844+23.44

SCALE 0 2.5 5 10 IN FEET

NO.	DATE	BY	CHECK	DESIGN	REVISION / SUBMITTAL

AECOM

90% SUBMISSION - 01/22/16

METROPOLITAN COUNCIL

SOUTHWEST Green Line LRT Extension

CIVIL - VOLUME 3B
TRACK
TYPICAL SECTIONS

DISCIPLINE: TRACK

SHEET NAME: E4-TRK-TYP-001

SHEET 172 OF 420

Jan, 15 2016 10:42 am V:\3400_ADC\CAD\00_EAST\PLANSHEETS\TRACK\E4-TRK-TYP.dwg By: V-RasulL

NOTES:
1. TRACK CENTERS VARY IN CURVE E4–200. SEE TRACK PLANS.
2. SEE SYSTEMS PLANS FOR DUCTBANK AND CABLE TROUGH DETAILS.
3. SEE SYSTEMS PLANS FOR INTRUSION DETECTION DETAILS.
4. FOR DITCH INVERT AND DETAILS, SEE DRAINAGE PLANS.
5. SEE URBAN DESIGN PLANS FOR FENCE LOCATIONS AND DETAILS.

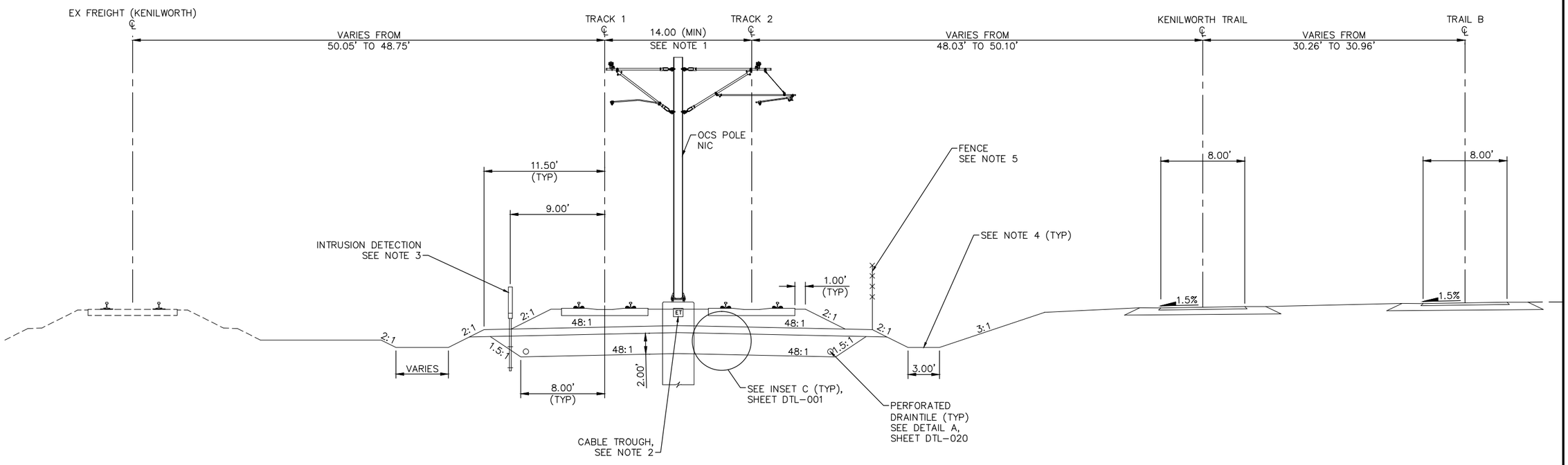

TYPICAL SECTION
STA. 2844+23.44 TO STA. 2844+67.44

0 2.5 5 10
SCALE IN FEET

NO.	DATE	BY	CHECK	DESIGN	REVISION / SUBMITTAL

AECOM

90% SUBMISSION - 01/22/16

METROPOLITAN COUNCIL

SOUTHWEST Green Line LRT Extension

CIVIL - VOLUME 3B
TRACK
TYPICAL SECTIONS

DISCIPLINE: TRACK

SHEET NAME: E4-TRK-TYP-002

SHEET 173 OF 420

Jan, 15 2016 10:42 am V:\3400_ADC\CAD\00_EAST\PLANSHEETS\TRACK\E4-TRK-TYP.dwg By: V-RasulL

NOTES:
1. TRACK CENTERS WIDEN FROM 14.13' TO 20.00' BETWEEN STA 2844+67.44 TO STA 2852+57.18.
2. SEE SYSTEMS PLANS FOR DUCTBANK AND CABLE TROUGH DETAILS.
3. SEE SYSTEMS PLANS FOR INTRUSION DETECTION DETAILS.
4. SEE SOIL CORRECTION TABLE FOR DETAILS.
5. SEE URBAN DESIGN PLANS FOR FENCE LOCATIONS AND DETAILS.
6. FOR DITCH INVERT AND DETAILS, SEE DRAINAGE PLANS.

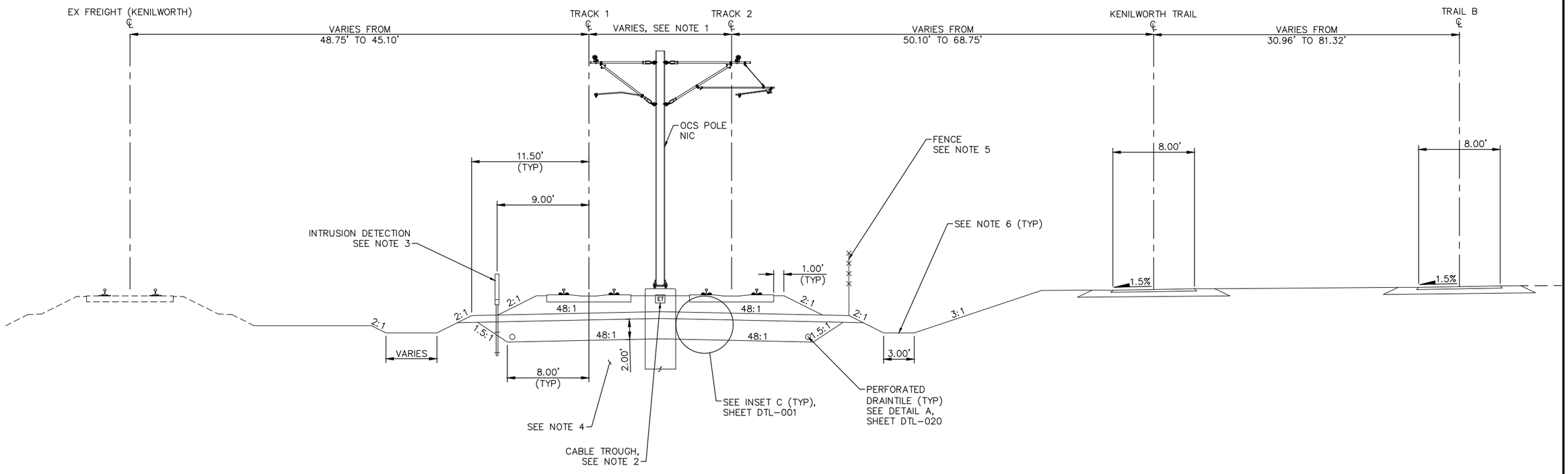

TYPICAL SECTION
STA. 2844+67.44 TO STA. 2852+57.18

0 2.5 5 10
SCALE IN FEET

NO.	DATE	BY	CHECK	DESIGN	REVISION / SUBMITTAL

AECOM

90% SUBMISSION - 01/22/16

METROPOLITAN COUNCIL

SOUTHWEST Green Line LRT Extension

CIVIL - VOLUME 3B
TRACK
TYPICAL SECTIONS

DISCIPLINE: TRACK

SHEET NAME: E4-TRK-TYP-003

SHEET 174 OF 420

Jan, 15 2016 10:42 am V:\3400_ADC\CAD\00_EAST\PLANSHEETS\TRACK\E4-TRK-TYP.dwg By: V-RasulL

NOTES:
1. TRACK CENTERS WIDEN FROM 20.00' TO 30.38' BETWEEN STA 2852+57.18 AND STA 2855+57.16.
2. SEE SYSTEMS PLANS FOR DUCTBANK AND CABLE TROUGH DETAILS.
3. SEE URBAN DESIGN PLANS FOR FENCE LOCATIONS AND DETAILS.
4. FOR DITCH INVERT AND DETAILS, SEE DRAINAGE PLANS.
5. SEE SYSTEMS PLANS FOR INTRUSION DETECTION DETAILS.
6. SEE SOIL CORRECTION TABLE FOR DETAILS.
7. SELECT GRANULAR DEPTH: STA 2852+57.18 TO STA 2855+92: 2.00'; STA 2856+02.16: 2.50'. TRANSITION LINEARLY BETWEEN STA 2855+92.00 AND STA 2856+02.16.
8. TRANSITION FROM 8.00' TO 8.50' BETWEEN STA 2855+92.00 AND STA 2856+02.16.

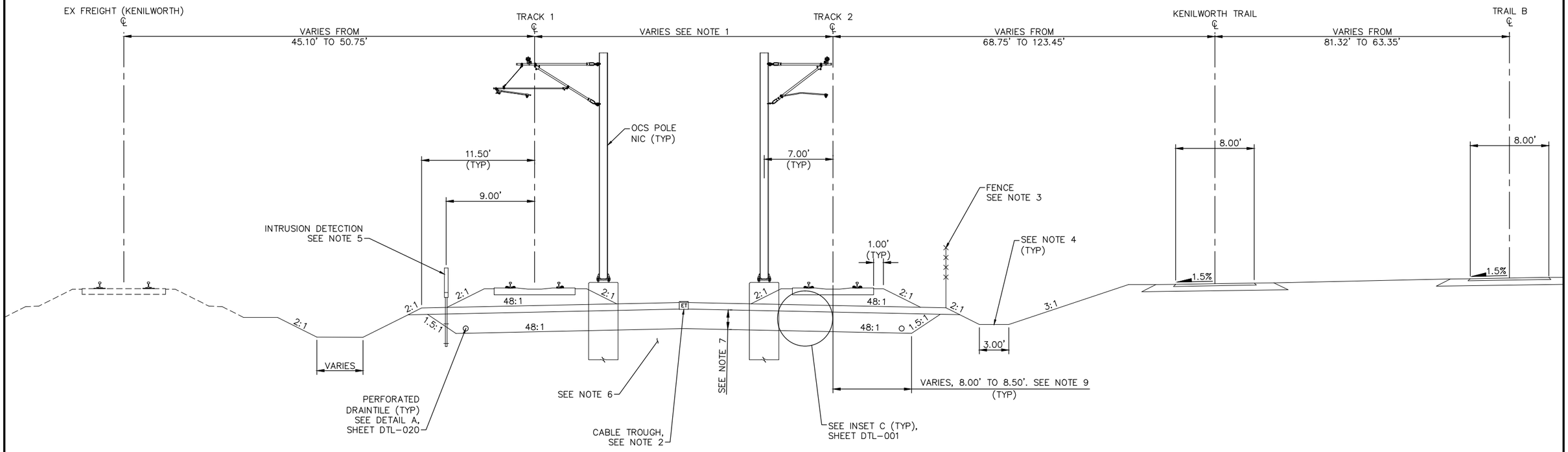

TYPICAL SECTION
STA. 2852+57.18 TO STA. 2856+02.16

SCALE 0 2.5 5 10 IN FEET

NO.	DATE	BY	CHECK	DESIGN	REVISION / SUBMITTAL

AECOM

90% SUBMISSION - 01/22/16

METROPOLITAN COUNCIL

SOUTHWEST Green Line LRT Extension

CIVIL - VOLUME 3B
TRACK
TYPICAL SECTIONS

SHEET 175 OF 420

DISCIPLINE: TRACK

SHEET NAME: E4-TRK-TYP-004

Jan. 15 2016 10:42 am V:\3400_ADC\CAD\00_EAST\PLANSHEETS\TRACK\E4-TRK-TYP.dwg By: V-RasulL

NOTES:
1. SEE STATION PLANS FOR STATION PLATFORM DETAILS.
2. SEE SYSTEMS PLANS FOR DUCTBANK AND CABLE TROUGH DETAILS.
3. FOR DITCH INVERT AND DETAILS, SEE DRAINAGE PLANS.
4. SEE URBAN DESIGN PLANS FOR FENCE LOCATIONS AND DETAILS.

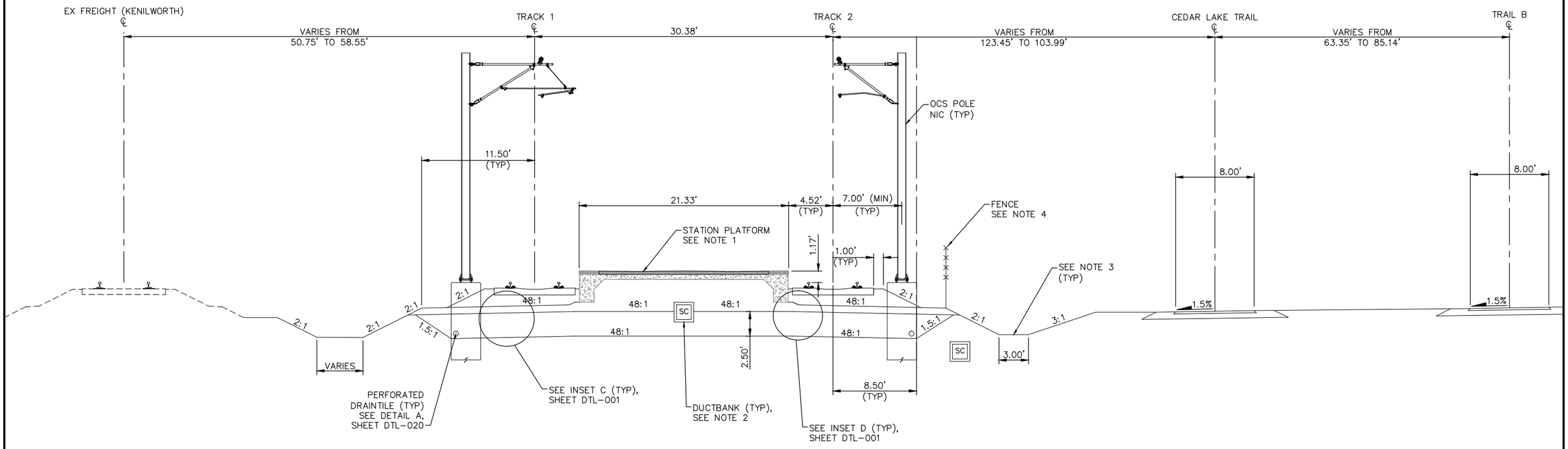

TYPICAL SECTION – PENN STATION
STA. 2856+02.16 TO STA. 2858+72.16

SCALE 0 2.5 5 10 IN FEET

NO.	DATE	BY	CHECK	DESIGN	REVISION / SUBMITTAL

AECOM

90% SUBMISSION - 01/22/16

METROPOLITAN COUNCIL

SOUTHWEST Green Line LRT Extension

CIVIL - VOLUME 3B
TRACK
TYPICAL SECTIONS

DISCIPLINE: TRACK

SHEET NAME: E4-TRK-TYP-005

SHEET 176 OF 420

Jan, 15 2016 10:42 am V:\3400_ADC\CAD\00_EAST\PLANSHEETS\TRACK\E4-TRK-TYP.dwg By: V-RasulL

NOTES:
1. TRACK CENTERS NARROW FROM 30.38' TO 29.86' BETWEEN STA 2859+19.82 AND STA 2859+85.64.
2. SEE STATION PLANS FOR PENN STATION VERTICAL CIRCULATION DETAIL.
3. PENN STATION SKYWALK. SEE STATION PLANS.
4. SEE SYSTEMS PLANS FOR DUCTBANK AND CABLE TROUGH DETAILS.
5. FOR DITCH INVERT AND DETAILS, SEE DRAINAGE PLANS.
6. SEE URBAN DESIGN PLANS FOR FENCE LOCATIONS AND DETAILS.

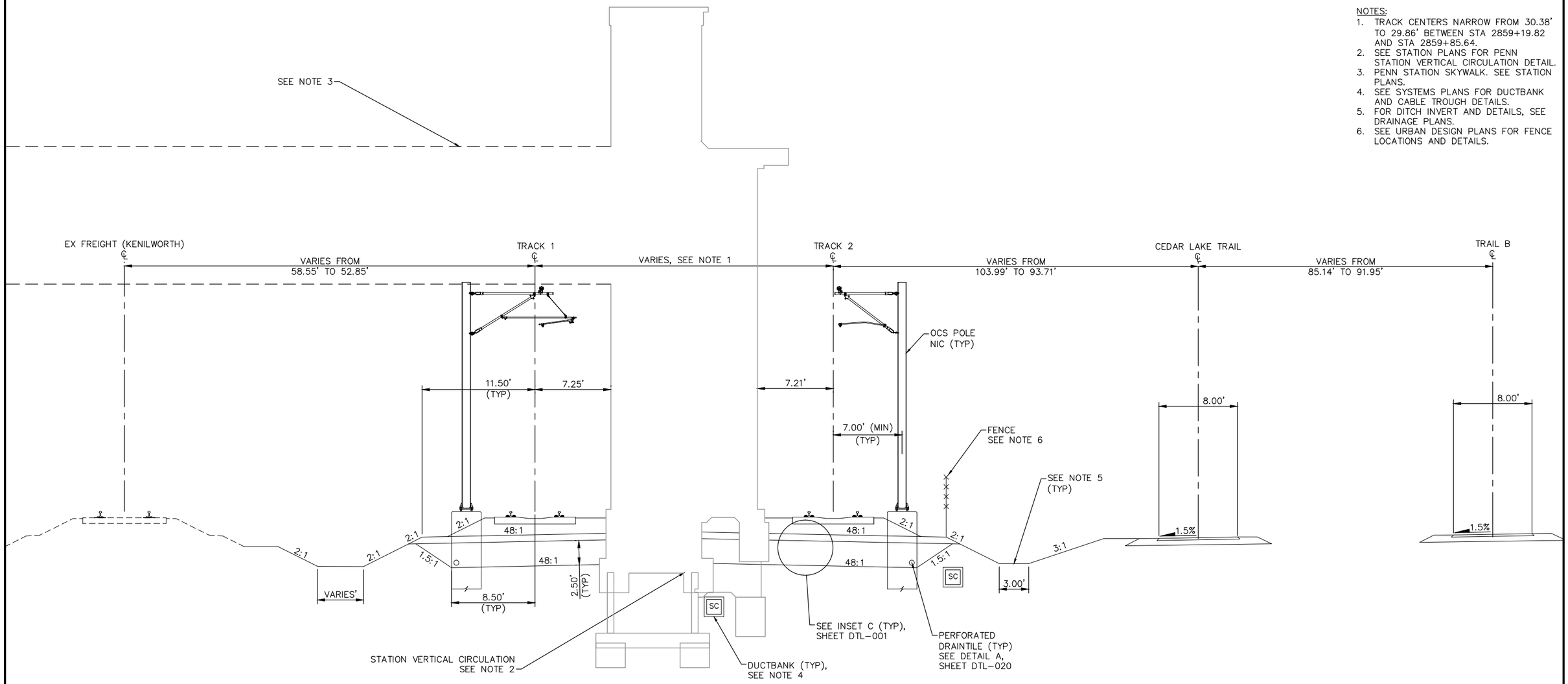

TYPICAL SECTION
STA. 2858+72.16 TO STA. 2859+85.64

SCALE 0 2.5 5 10 IN FEET

NO.	DATE	BY	CHECK	DESIGN	REVISION / SUBMITTAL

AECOM

90% SUBMISSION - 01/22/16

METROPOLITAN COUNCIL

SOUTHWEST Green Line LRT Extension

CIVIL - VOLUME 3B
TRACK
TYPICAL SECTIONS

DISCIPLINE: TRACK

SHEET NAME: E4-TRK-TYP-006

SHEET 177 OF 420

Jan, 15 2016 10:43 am v:\3400_ADC\CAD\00_EAST\PLANSHEETS\TRACK\E4-TRK-TYP.dwg By: V-RasulL

NOTES:
1. TRACK CENTERS NARROW FROM 29.86' TO 20.00 BETWEEN STA 2859+85.64 AND STA 2861+80.38.
2. SEE SYSTEMS PLANS FOR DUCTBANK AND CABLE TROUGH DETAILS.
3. SEE URBAN DESIGN PLANS FOR FENCE LOCATIONS AND DETAILS.
4. FOR DITCH INVERT AND DETAILS, SEE DRAINAGE PLANS.
5. SELECT GRANULAR DEPTH: STA 2859+85.64: 2.50'; STA 2860+16.00 TO STA 2861+80.38: 1.00'. TRANSITION LINEARLY BETWEEN STA 2859+85.64 AND STA 2860+16.00.
6. TRANSITION FROM 8.50' TO 7.00' BETWEEN STA 2859+85.64 AND STA 2860+16.00.

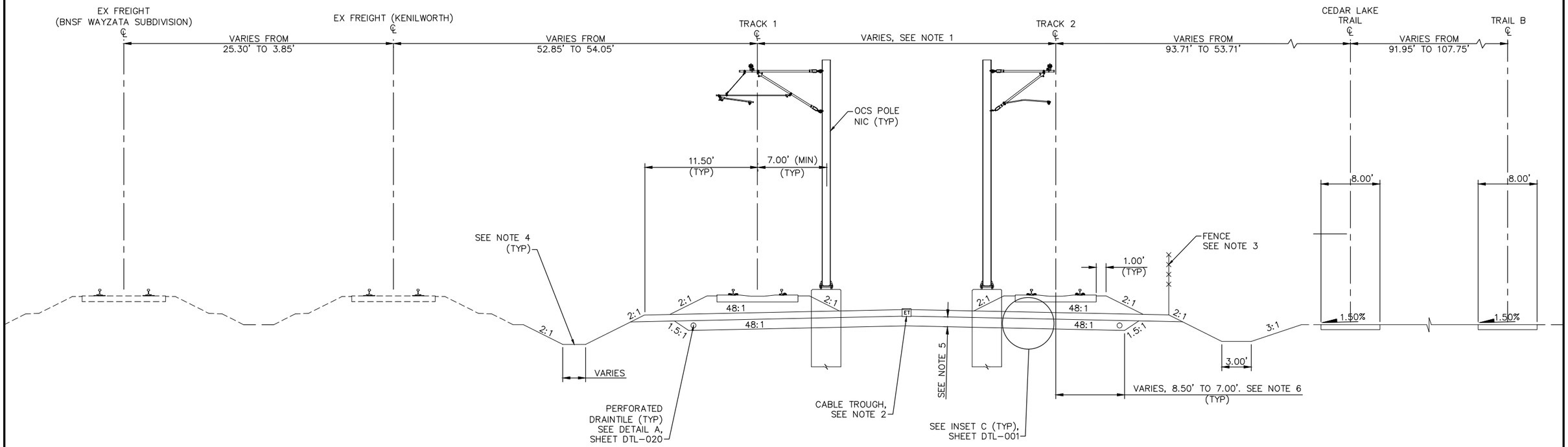

TYPICAL SECTION
STA. 2859+85.64 TO STA. 2861+80.38

SCALE 0 2.5 5 10 IN FEET

NO.	DATE	BY	CHECK	DESIGN	REVISION / SUBMITTAL

AECOM

90% SUBMISSION - 01/22/16

METROPOLITAN COUNCIL

SOUTHWEST Green Line LRT Extension

CIVIL - VOLUME 3B
TRACK
TYPICAL SECTIONS

DISCIPLINE: TRACK

SHEET NAME: E4-TRK-TYP-007

SHEET 178 OF 420

Jan, 15 2016 10:43 am V:\3400_ADC\CAD\00_EAST\PLANSHEETS\TRACK\E4-TRK-TYP.dwg By: V-RasulL

NOTES:
1. TRACK CENTERS NARROW FROM 20.00' TO 14.00' BETWEEN STA 2861+80.35 AND STA 2863+42.26.
2. SEE SYSTEMS PLANS FOR DUCTBANK AND CABLE TROUGH DETAILS.
3. BALLAST CURB AND PERFORATED DRAINTILE FROM STA 2861+95.61 TO STA 2862+51.03.
4. SEE URBAN DESIGN PLANS FOR FENCE LOCATIONS AND DETAILS.
5. FOR DITCH INVERT AND DETAILS, SEE DRAINAGE PLANS.

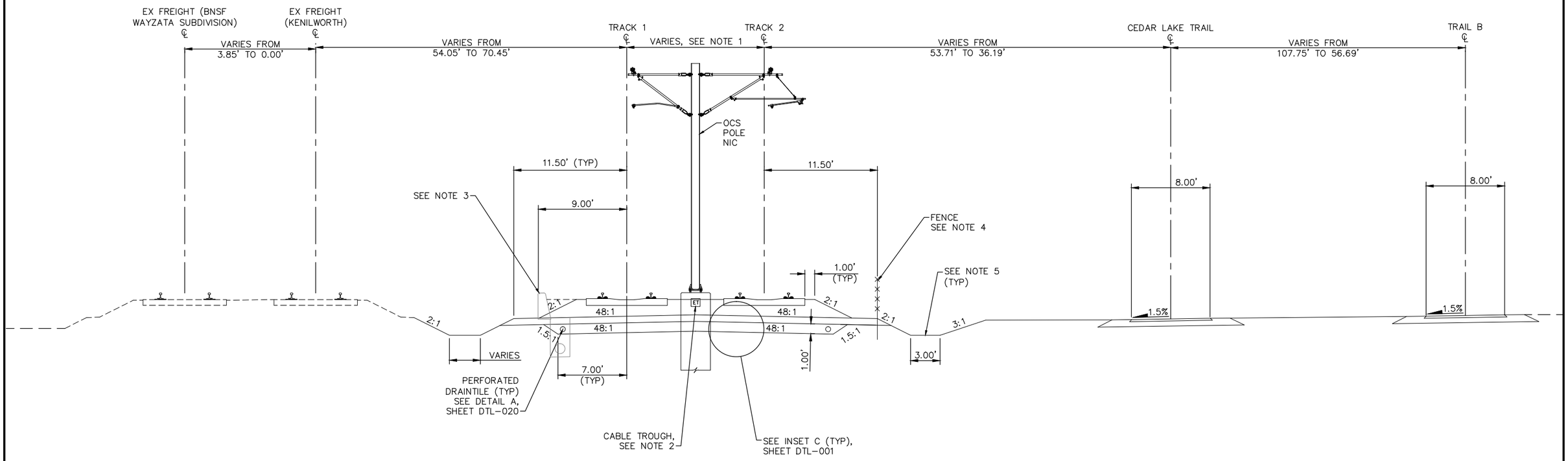

TYPICAL SECTION
STA. 2861+80.38 TO STA. 2866+03.79

SCALE 0 2.5 5 10 IN FEET

NO.	DATE	BY	CHECK	DESIGN	REVISION / SUBMITTAL

AECOM

90% SUBMISSION - 01/22/16

METROPOLITAN COUNCIL

SOUTHWEST Green Line LRT Extension

CIVIL - VOLUME 3B
TRACK
TYPICAL SECTIONS

DISCIPLINE: TRACK

SHEET NAME: E4-TRK-TYP-008

SHEET 179 OF 420

Jan. 15 2016 10:43 am V:\3400_ADC\CAD\00_EAST\PLANSHEETS\TRACK\E4-TRK-TYP.dwg By: V-RasulL

NOTES:
1. SEE SYSTEMS PLANS FOR DUCTBANK AND CABLE TROUGH DETAILS.
2. SEE URBAN DESIGN PLANS FOR FENCE LOCATIONS AND DETAILS.
3. FOR DITCH INVERT AND DETAILS, SEE DRAINAGE PLANS.

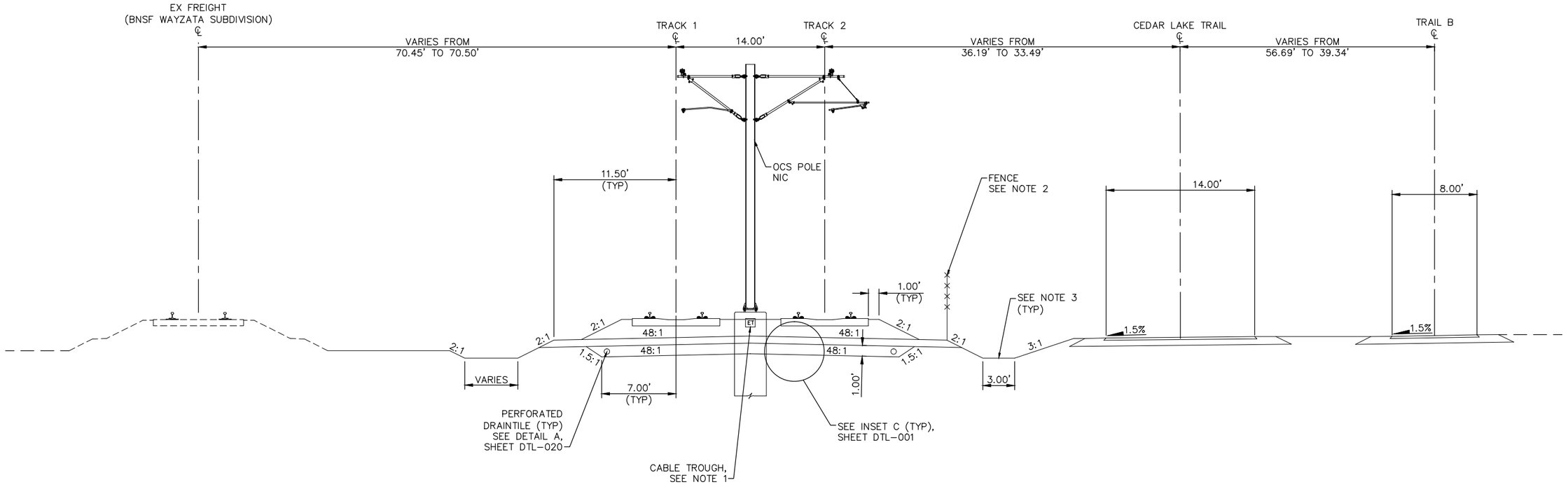

TYPICAL SECTION
STA. STA. 2866+03.79 TO STA. 2867+00.00

0 2.5 5 10
SCALE IN FEET

NO.	DATE	BY	CHECK	DESIGN	REVISION / SUBMITTAL

AECOM

90% SUBMISSION - 01/22/16

METROPOLITAN COUNCIL

SOUTHWEST Green Line LRT Extension

CIVIL - VOLUME 3B
TRACK
TYPICAL SECTIONS

DISCIPLINE: TRACK

SHEET NAME: E4-TRK-TYP-009

SHEET 180 OF 420

Jan, 15 2016 10:43 am V:\3400_ADC\CAD\00_EAST\PLANSHEETS\TRACK\E4-TRK-TYP.dwg By: V-RasulL

NOTES:
1. SEE SYSTEMS PLANS FOR DUCTBANK AND CABLE TROUGH DETAILS.
2. SEE URBAN DESIGN PLANS FOR FENCE LOCATIONS AND DETAILS.
3. FOR DITCH INVERT AND DETAILS, SEE DRAINAGE PLANS.

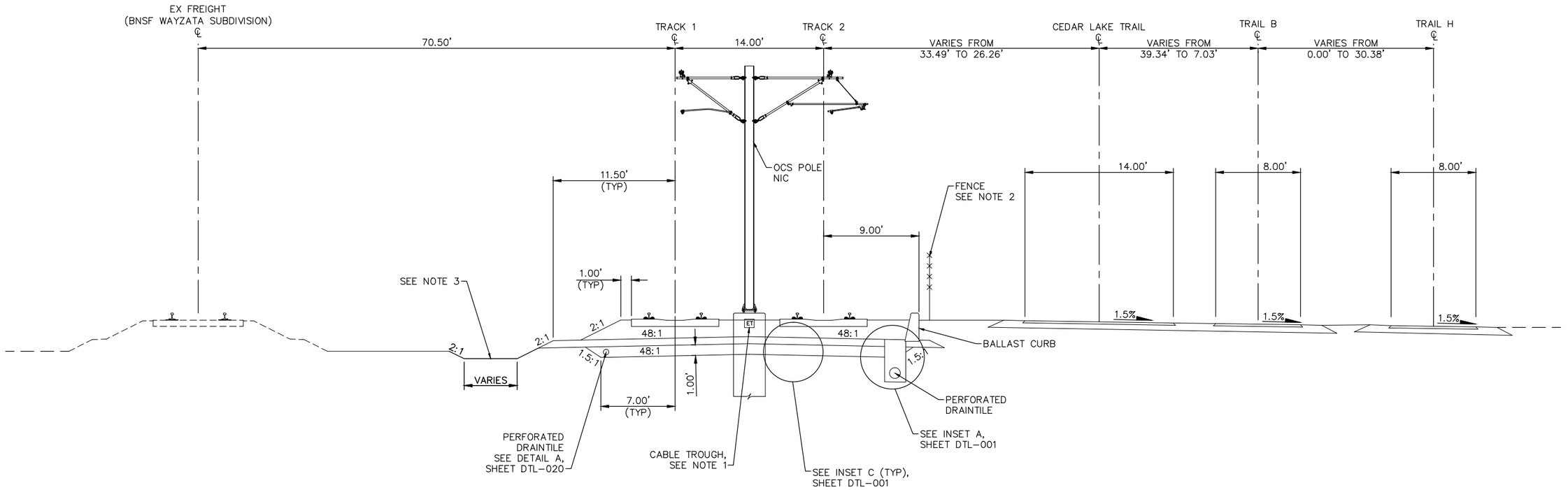

TYPICAL SECTION
STA. 2867+00.00 TO STA. 2868+90.00

0 2.5 5 10
SCALE IN FEET

NO.	DATE	BY	CHECK	DESIGN	REVISION / SUBMITTAL

AECOM

90% SUBMISSION - 01/22/16

METROPOLITAN COUNCIL

SOUTHWEST Green Line LRT Extension

CIVIL - VOLUME 3B
TRACK
TYPICAL SECTIONS

SHEET 181 OF 420

DISCIPLINE: TRACK

SHEET NAME: E4-TRK-TYP-010

Jan, 15 2016 10:43 am V:\3400_ADC\CAD\00_EAST\PLANSHEETS\TRACK\E4-TRK-TYP.dwg By: V-RasulL

NOTES:
1. TRACK CENTERLINES VARY IN CURVE E4–203. SEE TRACK PLANS.
2. SEE SYSTEMS PLANS FOR DUCTBANK AND CABLE TROUGH DETAILS.
3. SEE STRUCTURAL PLANS FOR PROPOSED PIER PROTECTION DETAILS.
4. FOR DITCH INVERT AND DETAILS, SEE DRAINAGE PLANS.

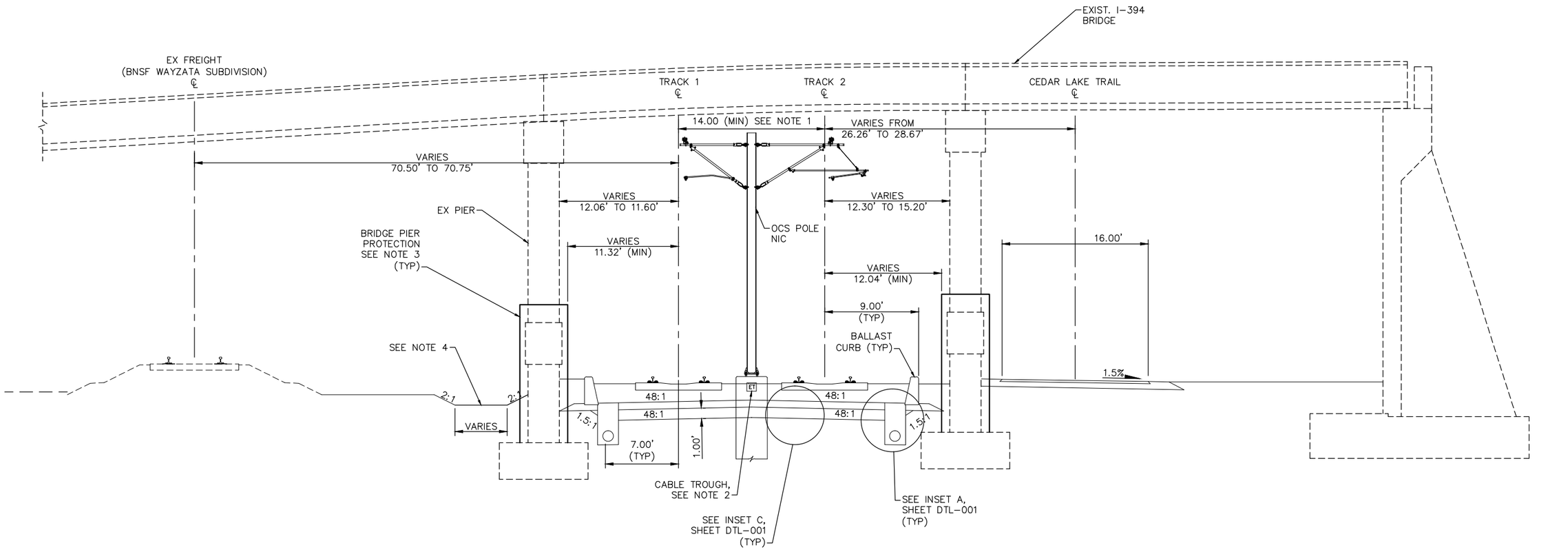

TYPICAL SECTION
STA. 2868+90.00 TO STA. 2872+91.95

0 2.5 5 10
SCALE IN FEET

NO.	DATE	BY	CHECK	DESIGN	REVISION / SUBMITTAL

AECOM

90% SUBMISSION - 01/22/16

METROPOLITAN COUNCIL

SOUTHWEST Green Line LRT Extension

CIVIL - VOLUME 3B
TRACK
TYPICAL SECTIONS

DISCIPLINE: TRACK

SHEET NAME: E4-TRK-TYP-011

SHEET 182 OF 420

Jan, 15 2016 10:44 am V:\3400_ADC\CAD\00_EAST\PLANSHEETS\TRACK\E4-TRK-TYP.dwg By: V-RasulL

NOTES:
1. TRACK CENTERS VARY IN CURVE E4–203. SEE TRACK PLANS.
2. SEE SYSTEMS PLANS FOR DUCTBANK AND CABLE TROUGH DETAILS.
3. SEE URBAN DESIGN PLANS FOR FENCE LOCATIONS AND DETAILS.
4. FOR DITCH INVERT AND DETAILS, SEE DRAINAGE PLANS.

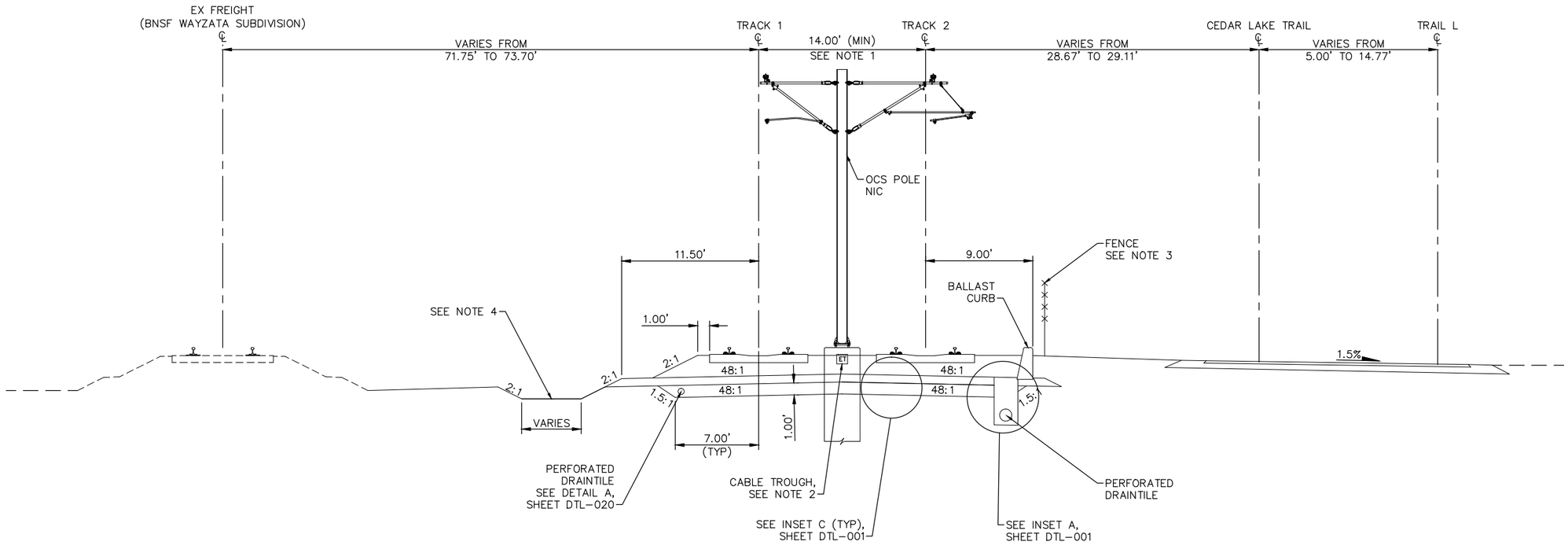

TYPICAL SECTION
STA. 2872+91.95 TO STA. 2875+12.79

0 2.5 5 10
SCALE IN FEET

NO.	DATE	BY	CHECK	DESIGN	REVISION / SUBMITTAL

AECOM

90% SUBMISSION - 01/22/16

METROPOLITAN COUNCIL

SOUTHWEST Green Line LRT Extension

CIVIL - VOLUME 3B
TRACK
TYPICAL SECTIONS

DISCIPLINE: TRACK

SHEET NAME: E4-TRK-TYP-012

SHEET 183 OF 420

Jan. 15 2016 10:44 am V:\3400_ADC\CAD\00_EAST\PLANSHEETS\TRACK\E4-TRK-TYP.dwg By: V-RasulL

NOTES:
1. TRACK CENTERS VARY IN CURVE E4–203. SEE TRACK PLANS.
2. SEE SYSTEMS PLANS FOR DUCTBANK AND CABLE TROUGH DETAILS.
3. SEE URBAN DESIGN PLANS FOR FENCE LOCATIONS AND DETAILS.
4. FOR DITCH INVERT AND DETAILS, SEE DRAINAGE PLANS.

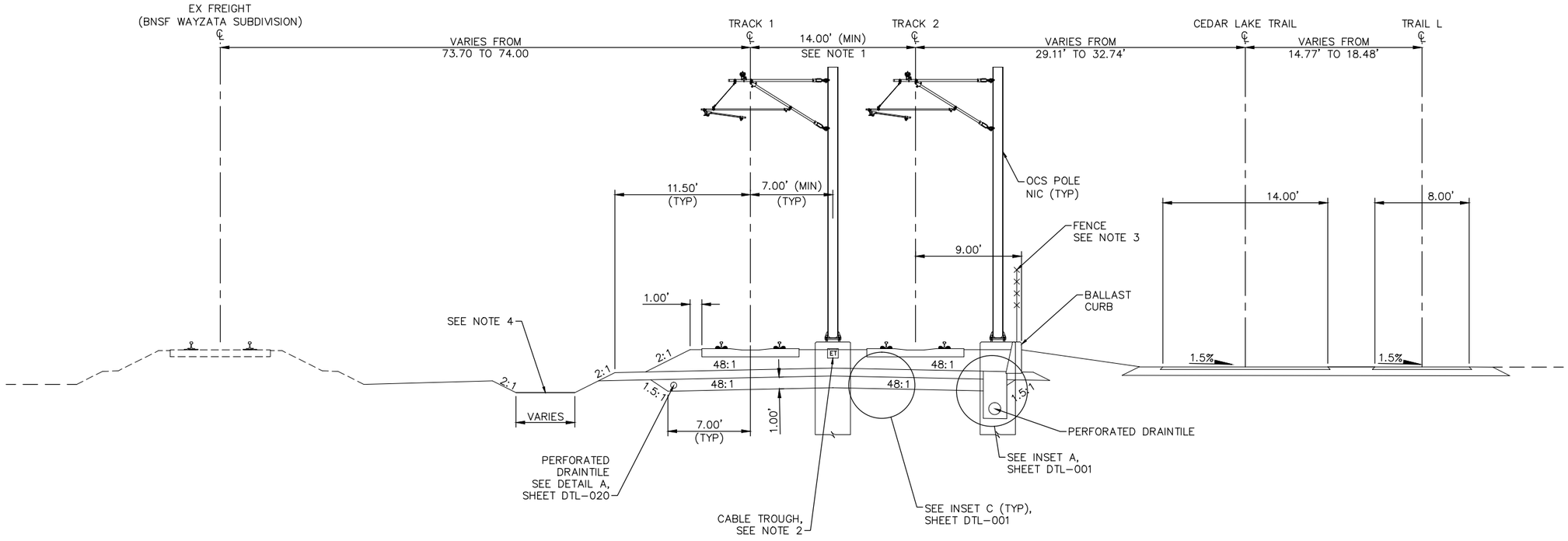

TYPICAL SECTION
STA. 2875+12.79 TO STA. 2876+00.00

0 2.5 5 10
SCALE IN FEET

NO.	DATE	BY	CHECK	DESIGN	REVISION / SUBMITTAL

AECOM

90% SUBMISSION - 01/22/16

METROPOLITAN COUNCIL

SOUTHWEST Green Line LRT Extension

CIVIL - VOLUME 3B
TRACK
TYPICAL SECTIONS

DISCIPLINE: TRACK

SHEET NAME: E4-TRK-TYP-013

SHEET 184 OF 420

Jan. 15 2016 10:44 am V:\3400_ADC\CAD\00_EAST\PLANSHEETS\TRACK\E4-TRK-TYP.dwg By: V-RasulL

NOTES:
1. TRACK CENTERS VARY IN CURVE E4–203. SEE TRACK PLANS.
2. SEE SYSTEMS PLANS FOR DUCTBANK AND CABLE TROUGH DETAILS.
3. SEE URBAN DESIGN PLANS FOR FENCE LOCATIONS AND DETAILS.
4. FOR DITCH INVERT AND DETAILS, SEE DRAINAGE PLANS.

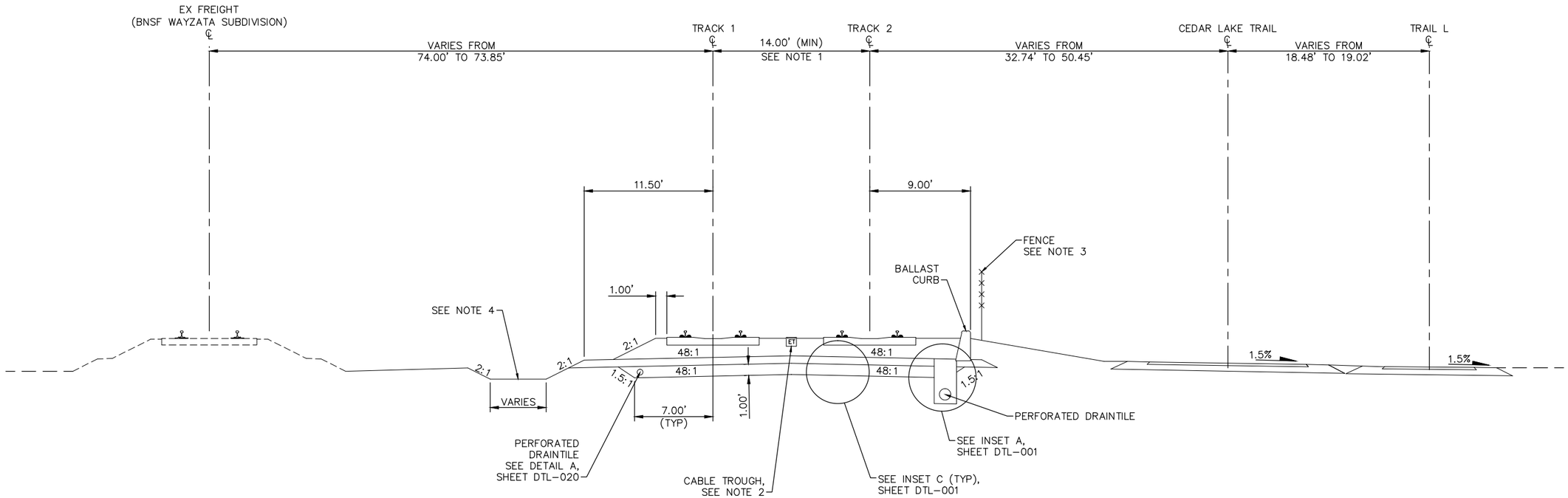

TYPICAL SECTION
STA. 2876+00.00 TO STA. 2876+60.62

0 2.5 5 10
SCALE IN FEET

NO.	DATE	BY	CHECK	DESIGN	REVISION / SUBMITTAL

AECOM

90% SUBMISSION - 01/22/16

METROPOLITAN COUNCIL

SOUTHWEST
Green Line LRT Extension

CIVIL - VOLUME 3B
TRACK
TYPICAL SECTIONS

DISCIPLINE: TRACK

SHEET NAME: E4-TRK-TYP-014

SHEET 185 OF 420

Jan, 15 2016 10:44 am v:\3400_ADC\CAD\00_EAST\PLANSHEETS\TRACK\E4–TRK–TYP.dwg By: V–RasulL

NOTES:
1. TRACK CENTERS VARY IN CURVE E4–203 AND E4–204. SEE TRACK PLANS.
2. TRACK CENTERS WIDEN FROM 14.00' TO 20.00' BETWEEN STA 2891+03.03 AND STA 2893+43.84.
3. PROPOSED CEDAR LAKE TRAIL TIES INTO EXISTING CEDAR LAKE TRAIL AT STA 2877+15.17.
4. PROPOSED TRAIL L TIES INTO EXISTING TRAIL AT STA 2876+78.74.
5. TPSS (BETWEEN TRACK 2 AND CEDAR LAKE TRAIL) IS NOT ILLUSTRATED.
6. SPECIAL TRACKWORK NOT ILLUSTRATED.
7. SEE SYSTEMS PLANS FOR DUCTBANK AND CABLE TROUGH DETAILS.
8. SEE URBAN DESIGN PLANS FOR FENCE LOCATIONS AND DETAILS.
9. FOR DITCH INVERT AND DETAILS, SEE DRAINAGE PLANS.
10. SELECT GRANULAR DEPTH: STA 2876+60.62 TO 2893+23.00: 1.00'; STA 2893+43.84: 2.00'. TRANSITION LINEARLY BETWEEN STA 2893+23.00 AND STA 2893+43.84.
11. TRANSITION FROM 7.00' TO 8.00' BETWEEN STA 2893+23.00 AND STA 2893+43.84.
12. BALLAST CURB AND PERFORATED DRAINTILE FROM STA 2876+60.62 TO STA 2877+60.00.

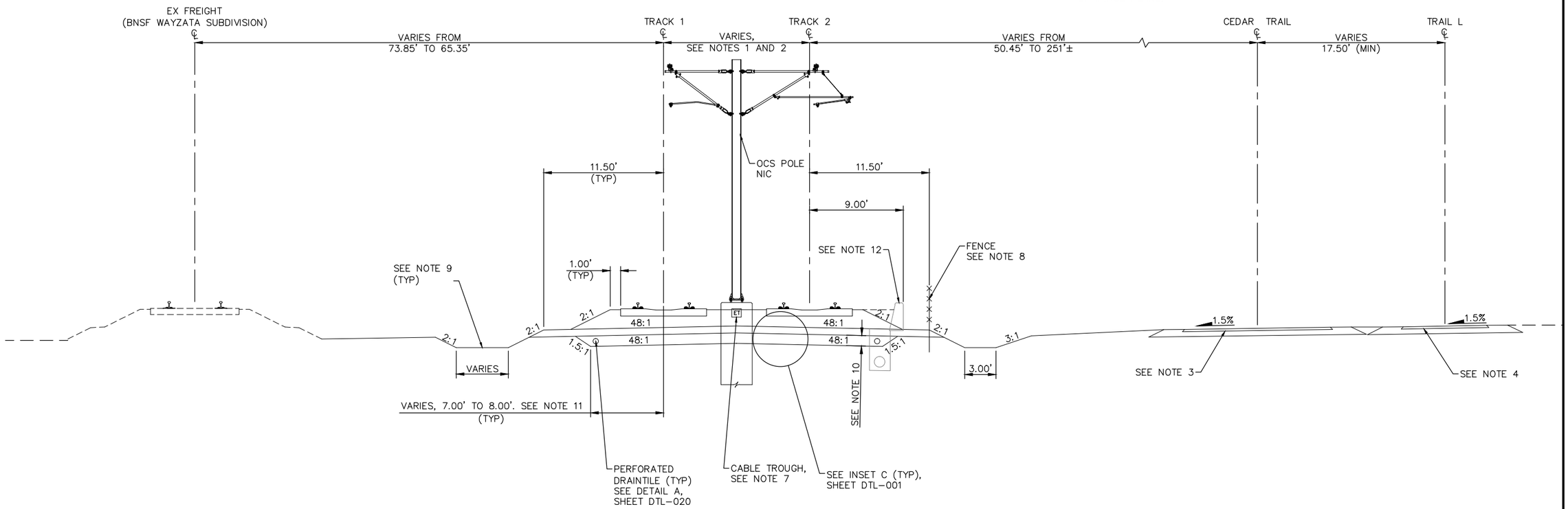

TYPICAL SECTION
STA. 2876+60.62 TO STA. 2893+43.84

0 2.5 5 10
SCALE IN FEET

NO.	DATE	BY	CHECK	DESIGN	REVISION / SUBMITTAL

AECOM

90% SUBMISSION - 01/22/16

METROPOLITAN COUNCIL

SOUTHWEST Green Line LRT Extension

CIVIL - VOLUME 3B
TRACK
TYPICAL SECTIONS

DISCIPLINE: TRACK

SHEET NAME: E4-TRK-TYP-015

SHEET 186 OF 420

Jan, 15 2016 10:44 am V:\3400_ADC\CAD\00_EAST\PLANSHEETS\TRACK\E4–TRK–TYP.dwg By: V–RasulL

NOTES:
1. TRACK CENTERS WIDEN FROM 20.00' TO 34.88' BETWEEN STA 2893+43.84 AND STA 2897+00.00.
2. SEE SYSTEMS PLANS FOR DUCTBANK AND CABLE TROUGH DETAILS.
3. SEE URBAN DESIGN PLANS FOR FENCE LOCATIONS AND DETAILS.
4. FOR DITCH INVERT AND DETAILS, SEE DRAINAGE PLANS.

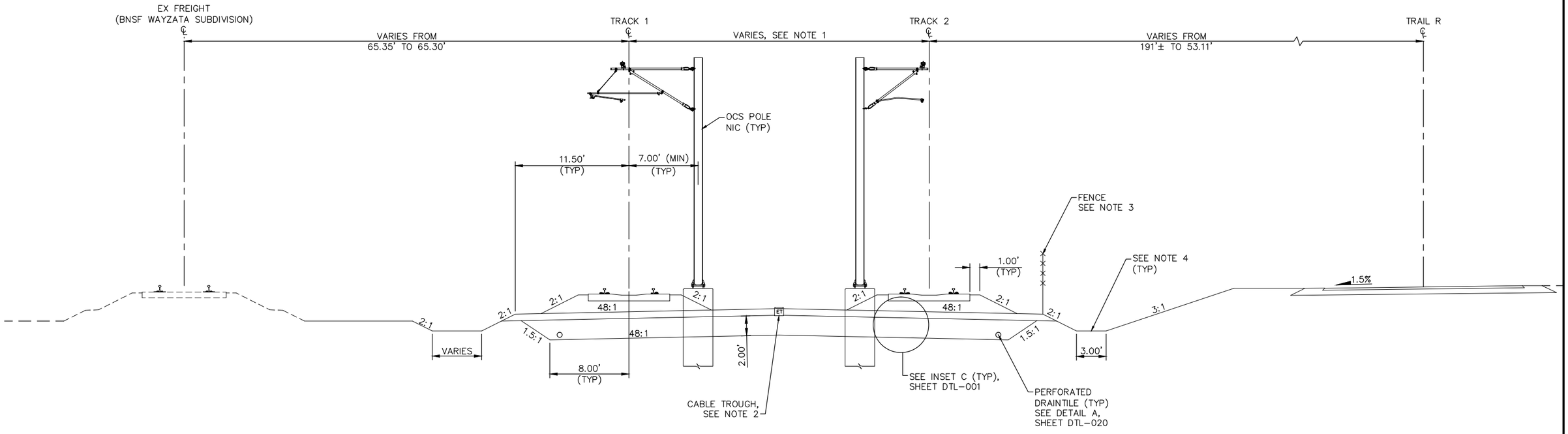

TYPICAL SECTION
STA. 2893+43.84 TO STA. 2897+00.00

0 2.5 5 10
SCALE IN FEET

NO.	DATE	BY	CHECK	DESIGN	REVISION / SUBMITTAL

AECOM

90% SUBMISSION - 01/22/16

METROPOLITAN COUNCIL

SOUTHWEST Green Line LRT Extension

CIVIL - VOLUME 3B
TRACK
TYPICAL SECTIONS

DISCIPLINE: TRACK

SHEET NAME: E4-TRK-TYP-016

SHEET 187 OF 420

Jan, 15 2016 10:44 am V:\3400_ADC\CAD\00_EAST\PLANSHEETS\TRACK\E4-TRK-TYP.dwg By: V-RasulL

NOTES:
1. TRACK CENTERS WIDEN FROM 20.00' TO 34.88' TO 35.00' BETWEEN STA 2897+00.00 AND STA 2897+66.32.
2. SEE SYSTEMS PLANS FOR DUCTBANK AND CABLE TROUGH DETAILS.
3. SEE URBAN DESIGN PLANS FOR FENCE LOCATIONS AND DETAILS.
4. FOR DITCH INVERT AND DETAILS, SEE DRAINAGE PLANS.

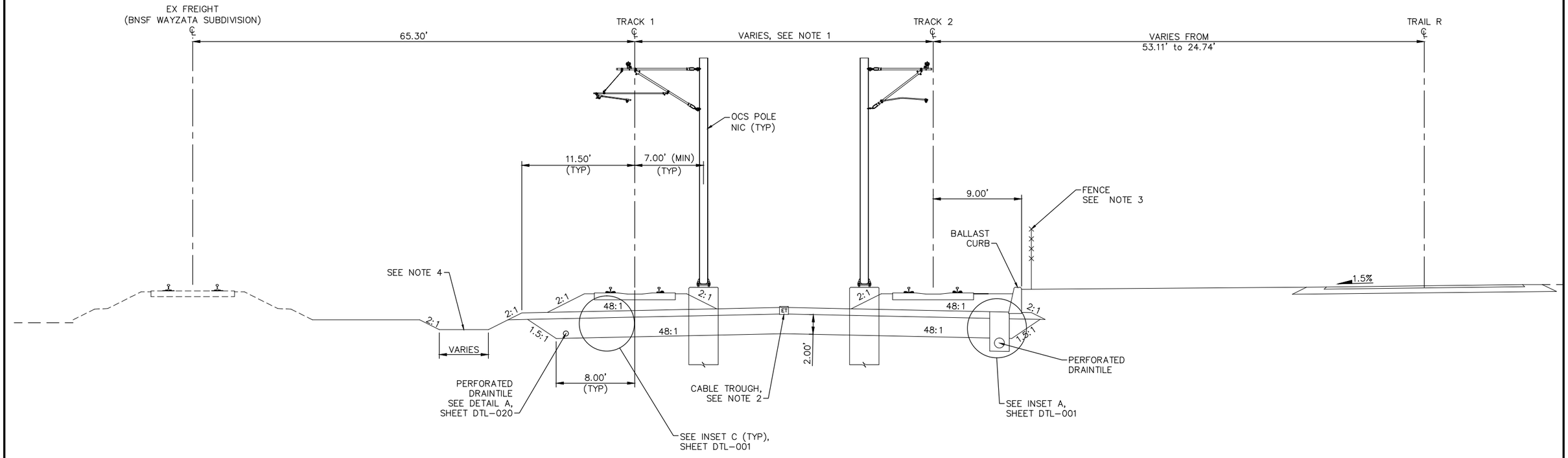

TYPICAL SECTION
STA. 2897+00.00 TO STA. 2897+66.32

SCALE 0 2.5 5 10 IN FEET

NO.	DATE	BY	CHECK	DESIGN	REVISION / SUBMITTAL

AECOM

90% SUBMISSION - 01/22/16

METROPOLITAN COUNCIL

SOUTHWEST Green Line LRT Extension

CIVIL - VOLUME 3B
TRACK
TYPICAL SECTIONS

DISCIPLINE: TRACK

SHEET NAME: E4-TRK-TYP-017

SHEET 188 OF 420

Jan, 15 2016 10:45 am V:\3400_ADC\CAD\00_EAST\PLANSHEETS\TRACK\E4-TRK-TYP.dwg By: V-Rasull

NOTES:
1. MnDOT BRIDGE R0696. SEE STRUCTURAL PLANS.
2. SEE SYSTEMS PLANS FOR DUCTBANK AND CABLE TROUGH DETAILS.
3. SEE URBAN DESIGN PLANS FOR FENCE LOCATIONS AND DETAILS.
4. FOR DITCH INVERT AND DETAILS, SEE DRAINAGE PLANS.
5. SELECT GRANULAR DEPTH: STA 2897+66.32 TO STA 2898+22.00: 2.00'; STA 2898+32.55: 2.50'. TRANSITION LINEARLY BETWEEN STA 2898+22.00 AND STA 2898+32.55.
6. TRANSITION FROM 8.00' TO 8.50' BETWEEN STA 2898+22.00 AND 2898+32.55.

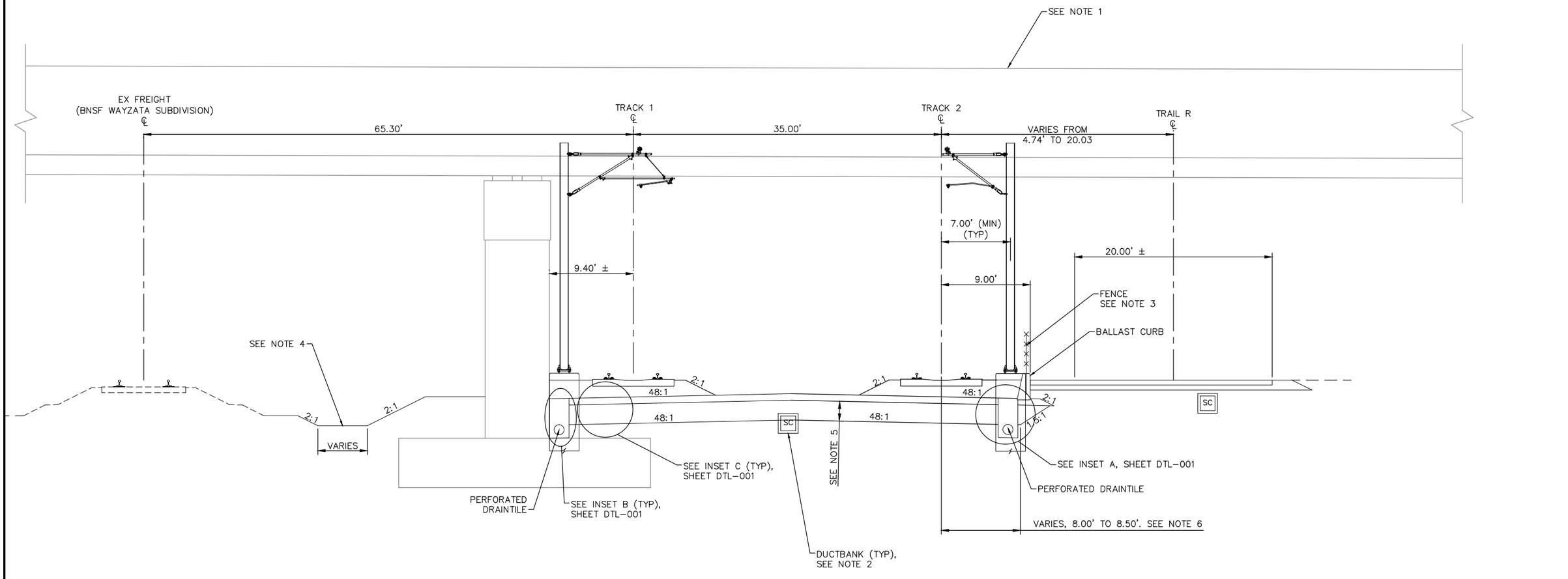

TYPICAL SECTION
STA. 2897+66.32 TO 2898+32.55

0 2.5 5 10
SCALE IN FEET

NO.	DATE	BY	CHECK	DESIGN	REVISION / SUBMITTAL

AECOM

90% SUBMISSION - 01/22/16

METROPOLITAN COUNCIL

SOUTHWEST
Green Line LRT Extension

CIVIL - VOLUME 3B
TRACK
TYPICAL SECTIONS

DISCIPLINE: TRACK

SHEET NAME: E4-TRK-TYP-018

SHEET 189 OF 420

Jan, 15 2016 10:45 am V:\3400_ADC\CAD\00_EAST\PLANSHEETS\TRACK\E4-TRK-TYP.dwg By: V-RasulL

NOTES:
1. SEE STATION PLANS FOR STATION PLATFORM DETAILS.
2. SEE SYSTEMS PLANS FOR DUCTBANK AND CABLE TROUGH DETAILS.
3. SEE URBAN DESIGN PLANS FOR FENCE LOCATIONS AND DETAILS.
4. FOR DITCH INVERT AND DETAILS, SEE DRAINAGE PLANS.

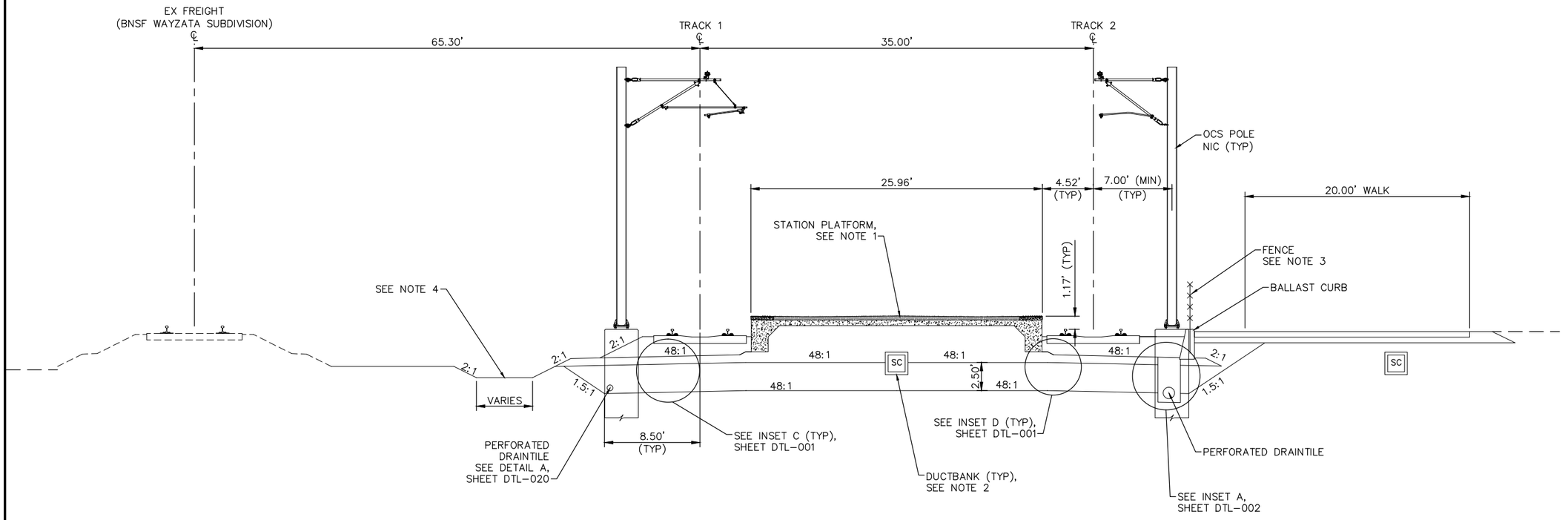

TYPICAL SECTION – VAN WHITE STATION
STA. 2898+32.55 TO STA. 2901+02.55

0 2.5 5 10
SCALE IN FEET

NO.	DATE	BY	CHECK	DESIGN	REVISION / SUBMITTAL

AECOM

90% SUBMISSION - 01/22/16

METROPOLITAN COUNCIL

SOUTHWEST
Green Line LRT Extension

CIVIL - VOLUME 3B
TRACK
TYPICAL SECTIONS

DISCIPLINE: TRACK

SHEET NAME: E4-TRK-TYP-019

SHEET 190 OF 420

Jan, 15 2016 10:45 am V:\3400_ADC\CAD\00_EAST\PLANSHEETS\TRACK\E4-TRK-TYP.dwg By: V-RasulL

NOTES:
1. TRACK CENTERS NARROW FROM 35.00' TO 34.89' BETWEEN STA 2901+60.67 AND STA 2902+22.14.
2. SEE STATION PLANS FOR VAN WHITE STATION VERTICAL CIRCULATION AND BUS OPERATOR FACILITY.
3. SEE SYSTEMS PLANS FOR DUCTBANK AND CABLE TROUGH DETAILS.
4. SEE URBAN DESIGN PLANS FOR FENCE LOCATIONS AND DETAILS.
5. FOR DITCH INVERT AND DETAILS, SEE DRAINAGE PLANS.
6. SELECT GRANULAR DEPTH: STA 2901+02.55: 2.50'; STA 2901+13.00 TO STA 2901+14.22: 2.00'. TRANSITION LINEARLY BETWEEN STA 2901+02.55 AND STA 2901+13.00.
7. TRANSITION FROM 8.50' TO 8.00' BETWEEN STA 2901+02.55 AND STA 2901+13.00.

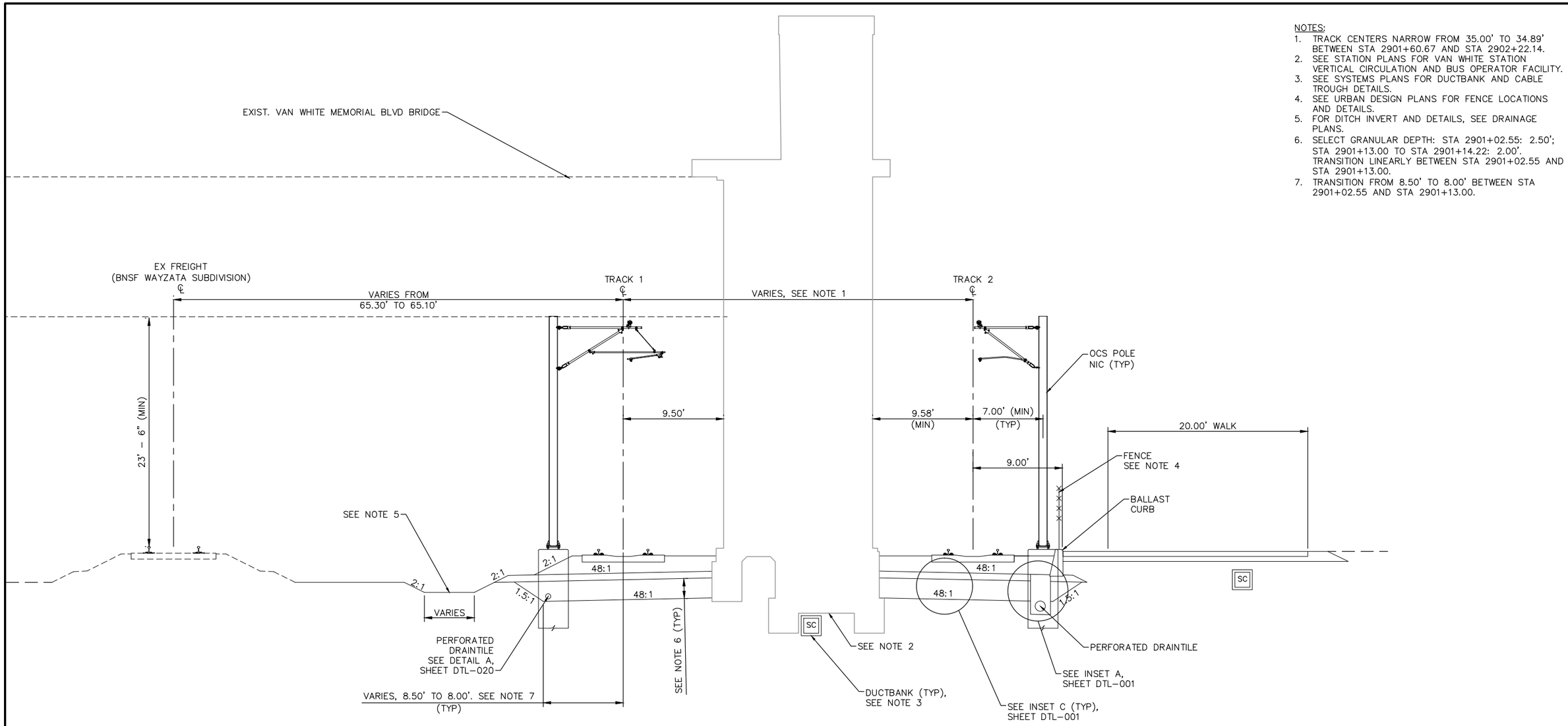

TYPICAL SECTION – VAN WHITE STATION
STA. 2901+02.55 TO STA. 2902+22.14

SCALE 0 2.5 5 10 IN FEET

NO.	DATE	BY	CHECK	DESIGN	REVISION / SUBMITTAL

AECOM

90% SUBMISSION - 01/22/16

METROPOLITAN COUNCIL

SOUTHWEST Green Line LRT Extension

CIVIL - VOLUME 3B
TRACK
TYPICAL SECTIONS

SHEET 191 OF 420

DISCIPLINE: TRACK

SHEET NAME: E4-TRK-TYP-020

Jan, 15 2016 10:45 am V:\3400_ADC\CAD\00_EAST\PLANSHEETS\TRACK\E4-TRK-TYP.dwg By: V-RasulL

NOTES:
1. TRACK CENTERS NARROW FROM 34.89' TO 20.00' BETWEEN STA 2902+22.14 AND 2907+45.00.
2. SEE SYSTEMS PLANS FOR DUCTBANK AND CABLE TROUGH DETAILS.
3. FOR DITCH INVERT AND DETAILS, SEE DRAINAGE PLANS.
4. SEE URBAN DESIGN PLANS FOR FENCE LOCATIONS AND DETAILS.

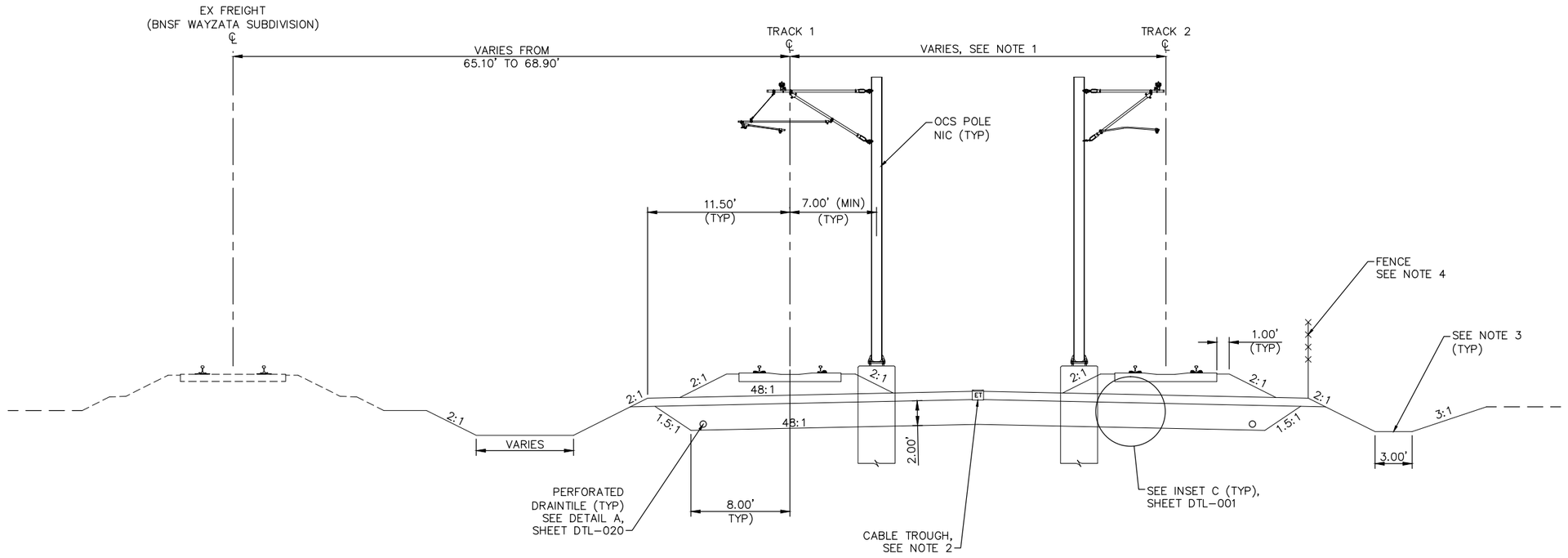

TYPICAL SECTION
STA. 2902+22.14 TO STA. 2907+45.00

SCALE 0 2.5 5 10 IN FEET

NO.	DATE	BY	CHECK	DESIGN	REVISION / SUBMITTAL

AECOM

90% SUBMISSION - 01/22/16

METROPOLITAN COUNCIL

SOUTHWEST Green Line LRT Extension

CIVIL - VOLUME 3B
TRACK
TYPICAL SECTIONS

DISCIPLINE: TRACK

SHEET NAME: E4-TRK-TYP-021

SHEET 192 OF 420

Jan, 15 2016 10:45 am V:\3400_ADC\CAD\00_EAST\PLANSHEETS\TRACK\E4-TRK-TYP.dwg By: V-RasulL

NOTES:
1. TRACK CENTERS NARROW FROM 20.00' TO 14.00' BETWEEN STA 2907+45.00 AND STA 2910+45.05.
2. SEE SYSTEMS PLANS FOR DUCTBANK AND CABLE TROUGH DETAILS.
3. FOR DITCH INVERT AND DETAILS, SEE DRAINAGE PLANS.
4. SEE URBAN DESIGN PLANS FOR FENCE LOCATIONS AND DETAILS.
5. SELECT GRANULAR DEPTH: STA 2907+45.00: 2.00'; STA 2907+65.00 TO STA 2914+87.96: 1.00'. TRANSITION LINEARLY BETWEEN STA 2907+45.00 AND STA 2907+65.00.
6. TRANSITION FROM 8.00' TO 7.00' BETWEEN STA 2907+45.00 AND STA 2907+65.00.

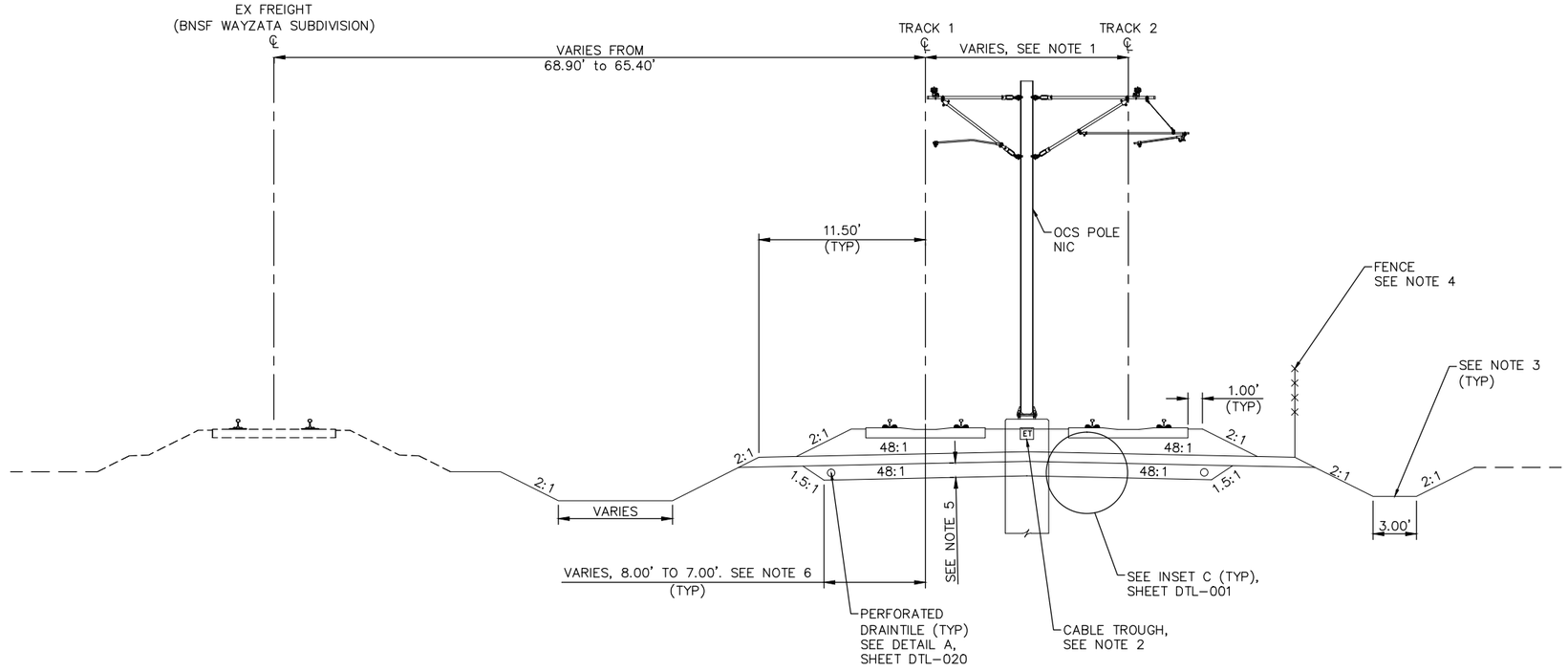

TYPICAL SECTION
STA. 2907+45.00 TO STA. 2914+87.96

0 2.5 5 10
SCALE IN FEET

NO.	DATE	BY	CHECK	DESIGN	REVISION / SUBMITTAL

AECOM

90% SUBMISSION - 01/22/16

METROPOLITAN COUNCIL

SOUTHWEST Green Line LRT Extension

CIVIL - VOLUME 3B
TRACK
TYPICAL SECTIONS

DISCIPLINE: TRACK

SHEET NAME: E4-TRK-TYP-022

SHEET 193 OF 420

Jan, 15 2016 10:46 am V:\3400_ADC\CAD\00_EAST\PLANSHEETS\TRACK\E4-TRK-TYP.dwg By: V-RasulL

NOTES:
1. TRACK CENTERS VARY IN CURVE E4–207. SEE TRACK PLANS.
2. SEE SYSTEMS PLANS FOR DUCTBANK AND CABLE TROUGH DETAILS.
3. FOR DITCH INVERT AND DETAILS, SEE DRAINAGE PLANS.

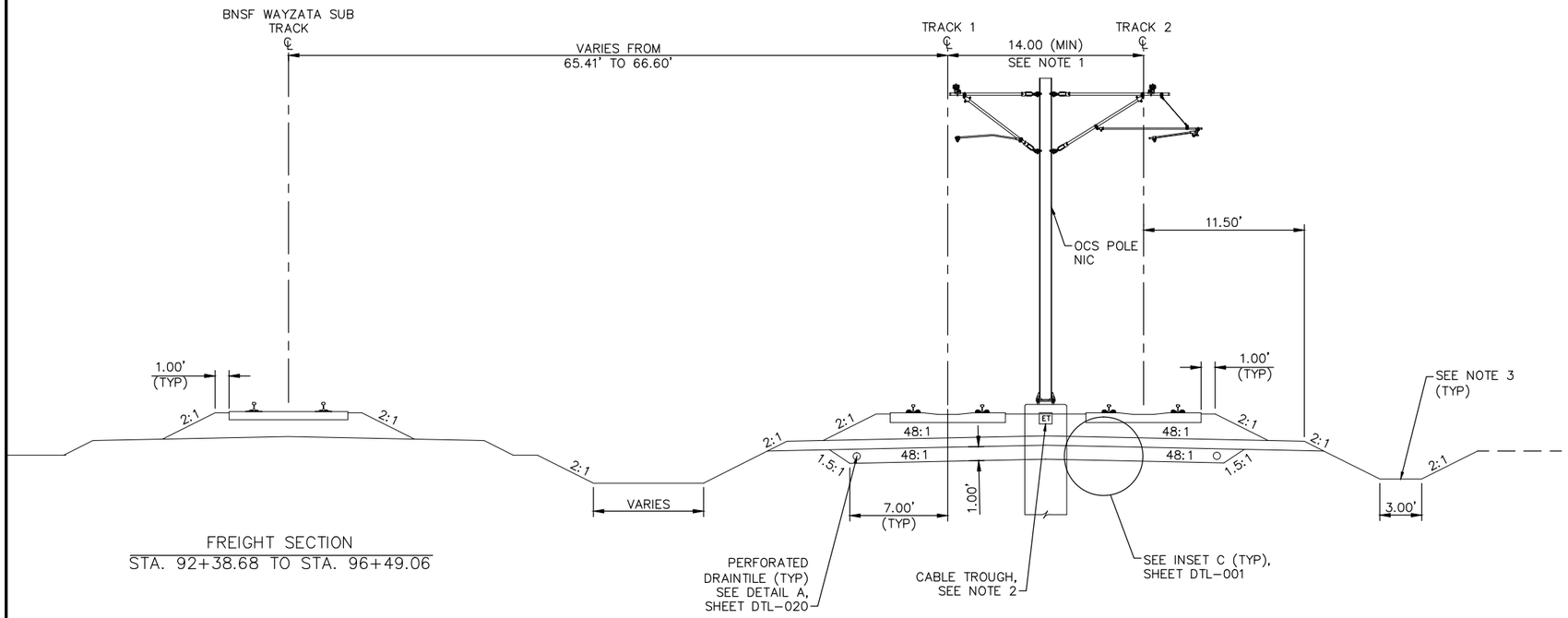

FREIGHT SECTION
STA. 92+38.68 TO STA. 96+49.06

TYPICAL SECTION
STA. 2914+87.96 TO STA. 2919+00.00

0 2.5 5 10
SCALE IN FEET

NO.	DATE	BY	CHECK	DESIGN	REVISION / SUBMITTAL

AECOM

90% SUBMISSION - 01/22/16

METROPOLITAN COUNCIL

SOUTHWEST Green Line LRT Extension

CIVIL - VOLUME 3B
TRACK
TYPICAL SECTIONS

DISCIPLINE: TRACK

SHEET NAME: E4-TRK-TYP-023

SHEET 194 OF 420

Jan. 15 2016 10:46 am v:\3400_ADC\CAD\00_EAST\PLANSHEETS\TRACK\E4-TRK-TYP.dwg By: V-RasulL

NOTES:
1. TRACK CENTERS VARY IN CURVE E4–207. SEE TRACK PLANS.
2. SEE SYSTEMS PLANS FOR DUCTBANK AND CABLE TROUGH DETAILS.
3. FOR DITCH INVERT AND DETAILS, SEE DRAINAGE PLANS.
4. SELECT GRANULAR DEPTH: STA 2919+00.00 TO STA 2919+17.11: 1.00'; STA 2919+63.78: 3.33'. TRANSITION LINEARLY BETWEEN STA 2919+17.11 AND STA 2919+63.78.
5. TRANSITION FROM 7.00' TO 9.50' BETWEEN STA 2919+17.11 AND STA 2919+63.78.

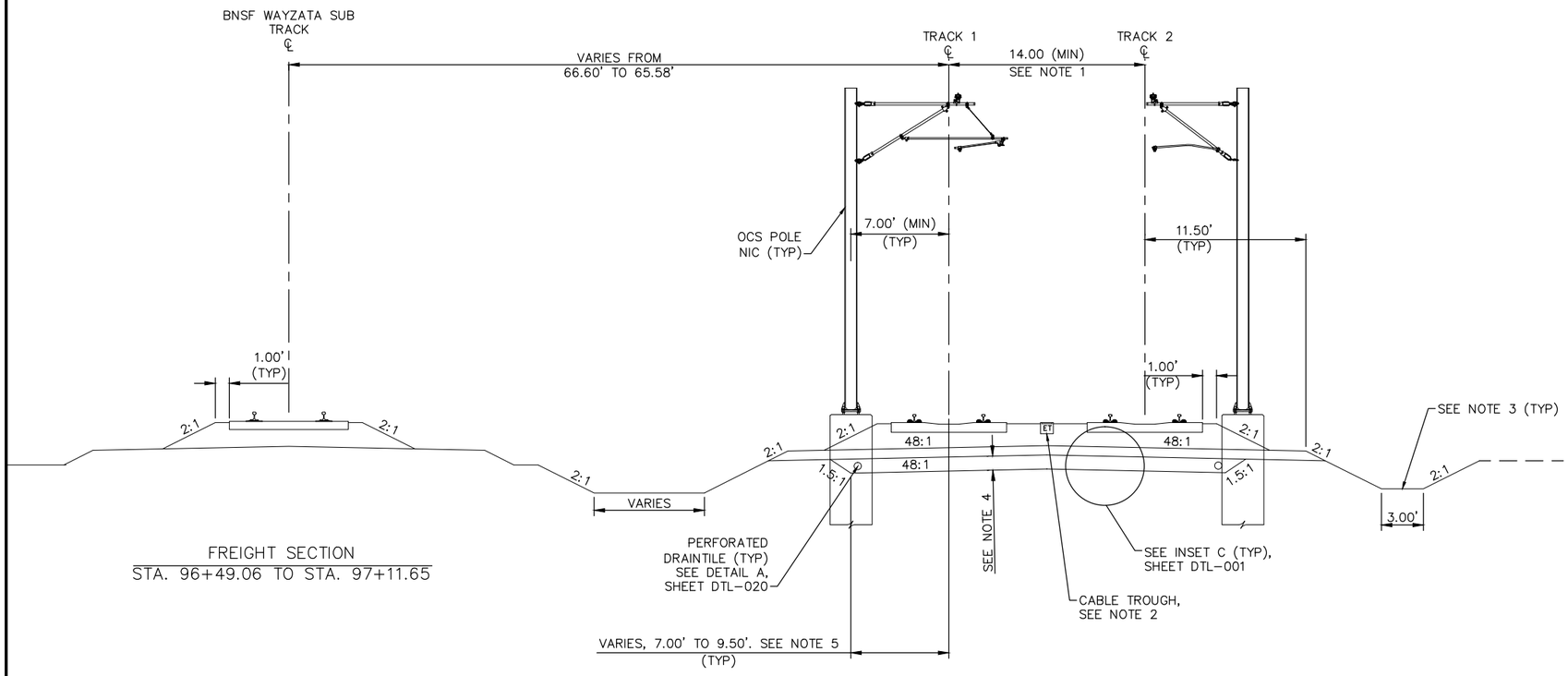

FREIGHT SECTION
STA. 96+49.06 TO STA. 97+11.65

TYPICAL SECTION
STA. 2919+00.00 TO STA. 2919+63.78

0 2.5 5 10
SCALE IN FEET

NO.	DATE	BY	CHECK	DESIGN	REVISION / SUBMITTAL

AECOM

90% SUBMISSION - 01/22/16

METROPOLITAN COUNCIL

SOUTHWEST Green Line LRT Extension

CIVIL - VOLUME 3B
TRACK
TYPICAL SECTIONS

DISCIPLINE: TRACK

SHEET NAME: E4-TRK-TYP-024

SHEET 195 OF 420

Jan, 15 2016 10:46 am V:\3400_ADC\CAD\00_EAST\PLANSHEETS\TRACK\E4-TRK-TYP.dwg By: V-RasulL

NOTES:
1. TRACK CENTERS VARY IN CURVE E4–207. SEE TRACK PLANS.
2. SEE RETAINING WALL PLANS FOR DETAILS.
3. SEE SYSTEMS PLANS FOR DUCTBANK AND CABLE TROUGH DETAILS.
4. FOR DITCH INVERT AND DETAILS, SEE DRAINAGE PLANS.

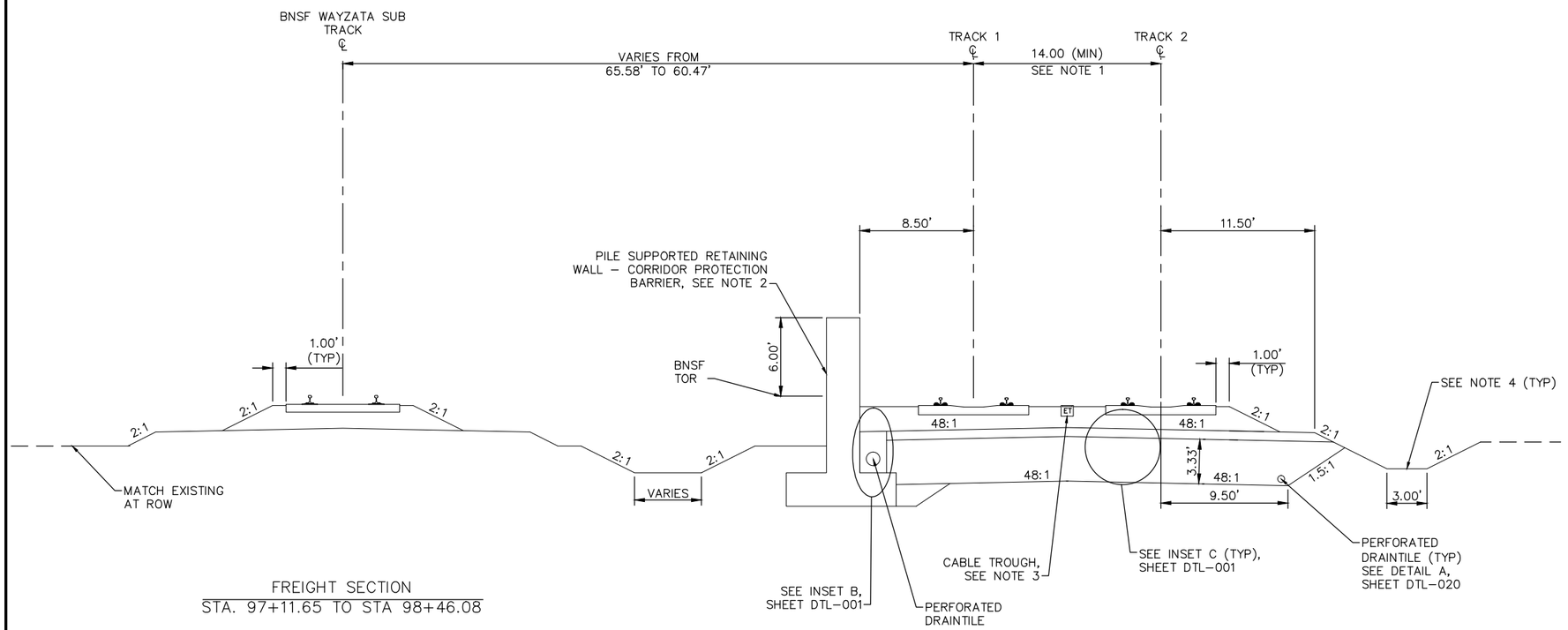

FREIGHT SECTION
STA. 97+11.65 TO STA 98+46.08

TYPICAL SECTION
STA. 2919+63.78 TO STA. 2921+00.00

0 2.5 5 10
SCALE IN FEET

NO.	DATE	BY	CHECK	DESIGN	REVISION / SUBMITTAL

AECOM

90% SUBMISSION - 01/22/16

METROPOLITAN COUNCIL

SOUTHWEST Green Line LRT Extension

CIVIL - VOLUME 3B
TRACK
TYPICAL SECTIONS

DISCIPLINE: TRACK

SHEET NAME: E4-TRK-TYP-025

SHEET 196 OF 420

Jan, 15 2016 10:46 am V:\3400_ADC\CAD\00_EAST\PLANSHEETS\TRACK\E4-TRK-TYP.dwg By: V-RasulL

NOTES:
1. TRACK CENTERS VARY IN CURVE E4–207. SEE TRACK PLANS.
2. SEE RETAINING WALL PLANS FOR DETAILS.
3. SEE SYSTEMS PLANS FOR DUCTBANK AND CABLE TROUGH DETAILS.
4. TPSS IS NOT ILLUSTRATED.
5. FOR DITCH INVERT AND DETAILS, SEE DRAINAGE PLANS.

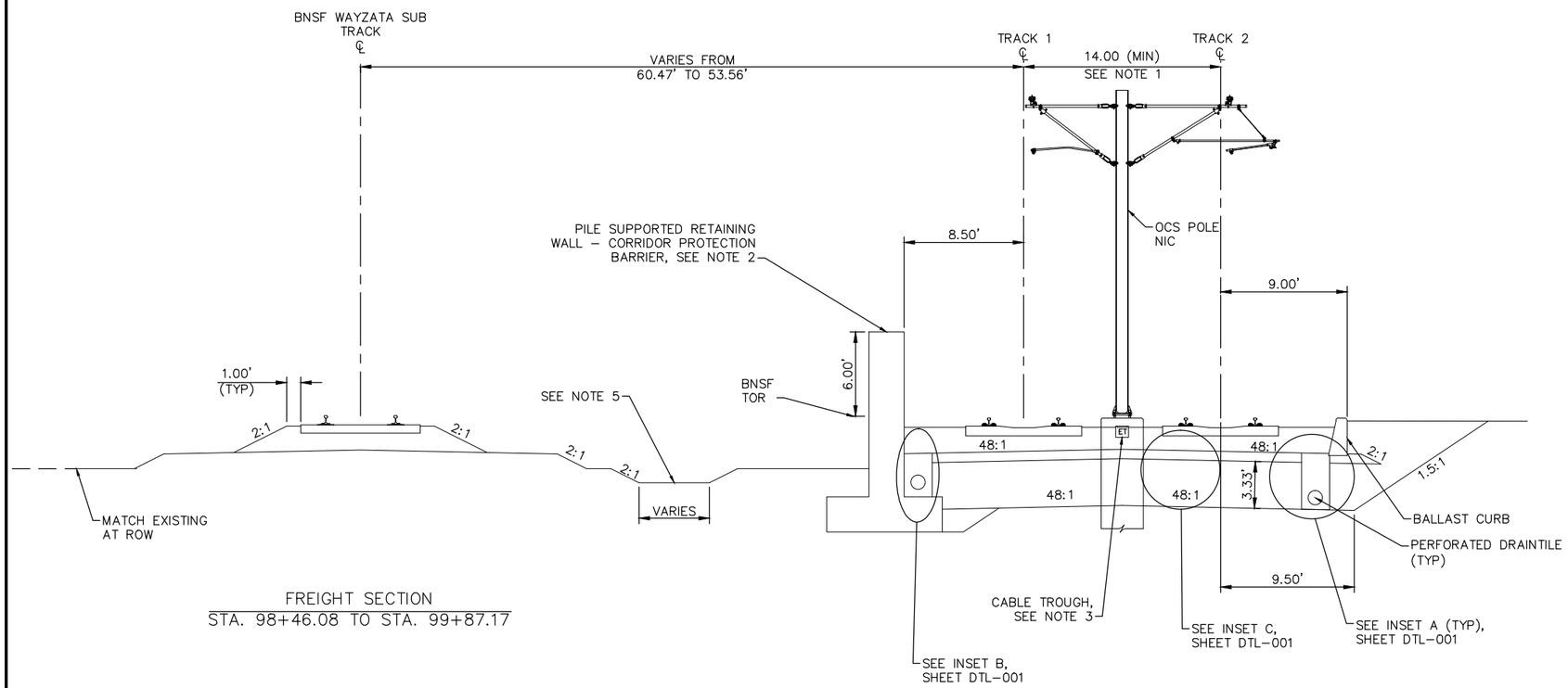

FREIGHT SECTION
STA. 98+46.08 TO STA. 99+87.17

TYPICAL SECTION
STA. 2921+00.00 TO STA. 2922+41.00

0 2.5 5 10
SCALE IN FEET

NO.	DATE	BY	CHECK	DESIGN	REVISION / SUBMITTAL

AECOM

90% SUBMISSION - 01/22/16

METROPOLITAN COUNCIL

SOUTHWEST Green Line LRT Extension

CIVIL - VOLUME 3B
TRACK
TYPICAL SECTIONS

DISCIPLINE: TRACK

SHEET NAME: E4-TRK-TYP-026

SHEET 197 OF 420

Jan, 15 2016 10:46 am V:\3400_ADC\CAD\00_EAST\PLANSHEETS\TRACK\E4-TRK-TYP.dwg By: V-RasulL

NOTES:
1. TRACK CENTERS VARY IN CURVE E4–208. SEE TRACK PLANS.
2. SEE RETAINING WALL PLANS FOR DETAILS.
3. SEE SYSTEMS PLANS FOR DUCTBANK AND CABLE TROUGH DETAILS.
4. SEE URBAN DESIGN PLANS FOR FENCE LOCATIONS AND DETAILS.
5. FOR DITCH INVERT AND DETAILS, SEE DRAINAGE PLANS.
6. SEE STRUCTURAL PLANS FOR PROPOSED PIER PROTECTION DETAILS.

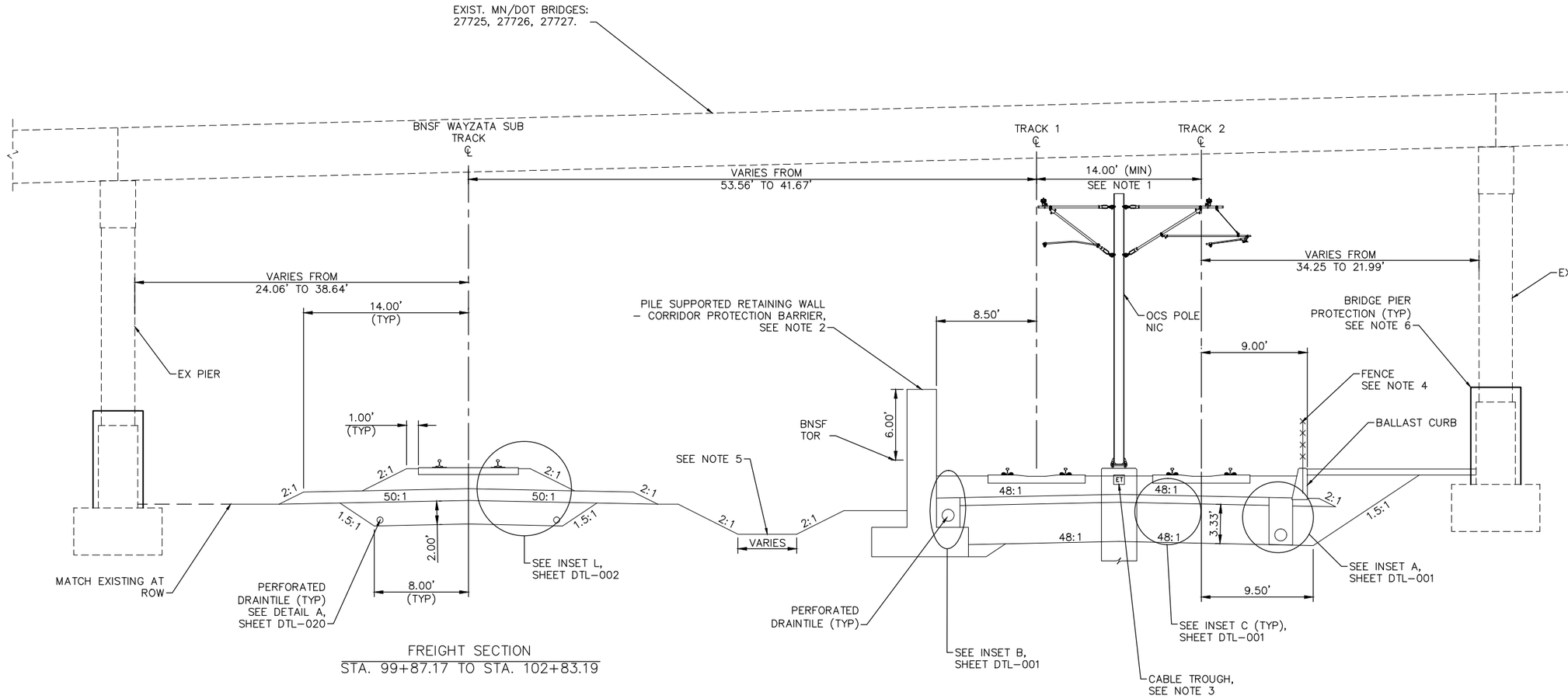

FREIGHT SECTION
STA. 99+87.17 TO STA. 102+83.19

TYPICAL SECTION
STA. 2922+41.00 TO STA. 2925+34.56

SCALE 0 2.5 5 10 IN FEET

NO.	DATE	BY	CHECK	DESIGN	REVISION / SUBMITTAL

AECOM

90% SUBMISSION - 01/22/16

METROPOLITAN COUNCIL

SOUTHWEST Green Line LRT Extension

CIVIL - VOLUME 3B
TRACK
TYPICAL SECTIONS

SHEET 198 OF 420

DISCIPLINE: TRACK

SHEET NAME: E4-TRK-TYP-027

Jan, 15 2016 10:47 am V:\3400_ADC\CAD\00_EAST\PLANSHEETS\TRACK\E4-TRK-TYP.dwg By: V-RasulL

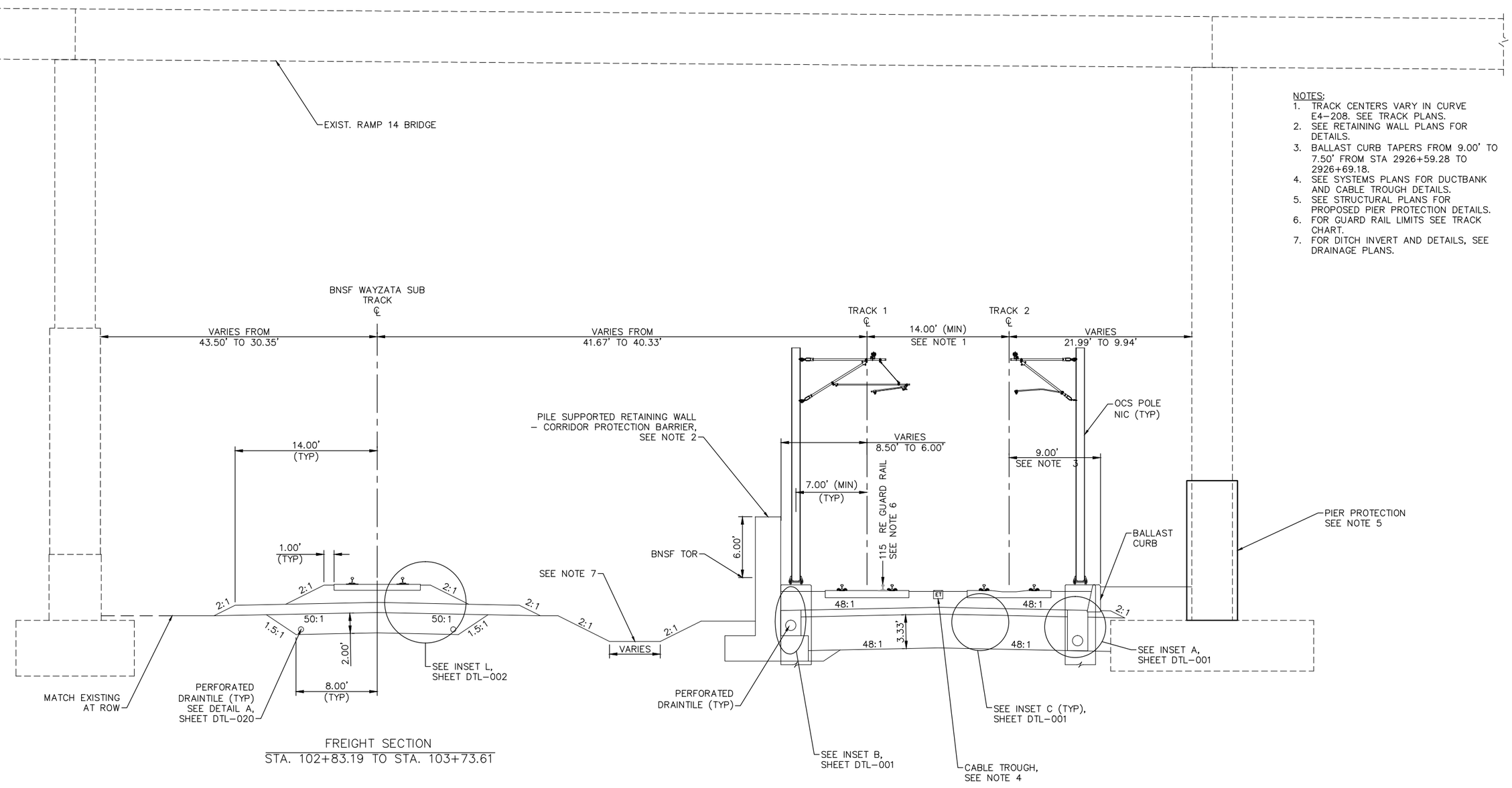

FREIGHT SECTION
STA. 102+83.19 TO STA. 103+73.61

TYPICAL SECTION
STA. 2925+34.56 TO STA. 2926+23.77

NOTES:
1. TRACK CENTERS VARY IN CURVE E4–208. SEE TRACK PLANS.
2. SEE RETAINING WALL PLANS FOR DETAILS.
3. BALLAST CURB TAPERS FROM 9.00' TO 7.50' FROM STA 2926+59.28 TO 2926+69.18.
4. SEE SYSTEMS PLANS FOR DUCTBANK AND CABLE TROUGH DETAILS.
5. SEE STRUCTURAL PLANS FOR PROPOSED PIER PROTECTION DETAILS.
6. FOR GUARD RAIL LIMITS SEE TRACK CHART.
7. FOR DITCH INVERT AND DETAILS, SEE DRAINAGE PLANS.

0 2.5 5 10
SCALE IN FEET

NO.	DATE	BY	CHECK	DESIGN	REVISION / SUBMITTAL

AECOM

90% SUBMISSION - 01/22/16

METROPOLITAN COUNCIL

SOUTHWEST Green Line LRT Extension

CIVIL - VOLUME 3B
TRACK
TYPICAL SECTIONS

SHEET 199 OF 420

DISCIPLINE: TRACK

SHEET NAME: E4-TRK-TYP-028

Jan, 15 2016 10:47 am V:\3400_ADC\CAD\00_EAST\PLANSHEETS\TRACK\E4-TRK-TYP.dwg By: V-RasulL

NOTES:
1. TRACK CENTERS VARY IN CURVE E4–208. SEE TRACK PLANS.
2. SEE RETAINING WALL PLANS FOR DETAILS.
3. SEE SYSTEMS PLANS FOR DUCTBANK AND CABLE TROUGH DETAILS.
4. SEE STRUCTURAL PLANS FOR PROPOSED PIER PROTECTION DETAILS.
5. FOR GUARD RAIL LIMITS SEE TRACK CHART.
6. FOR DITCH INVERT AND DETAILS, SEE DRAINAGE PLANS.

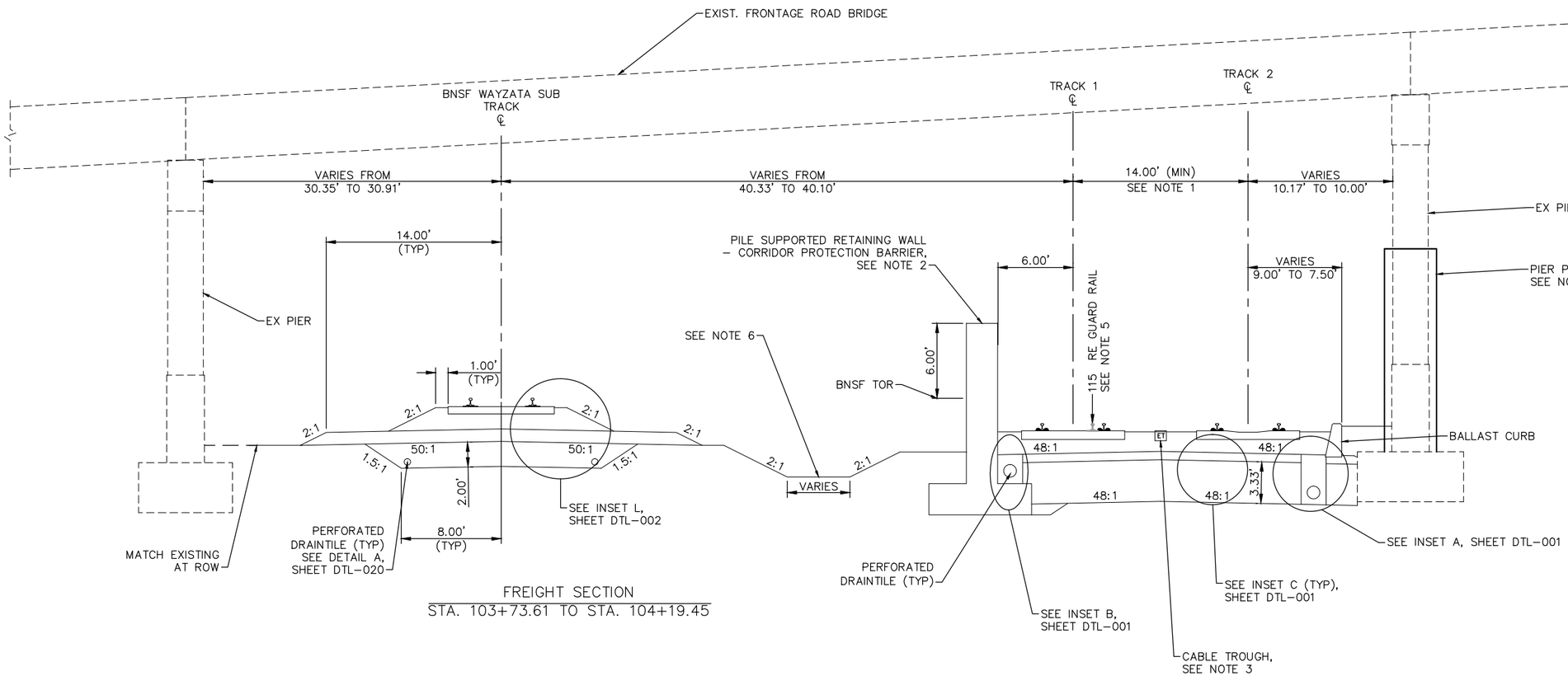

FREIGHT SECTION
STA. 103+73.61 TO STA. 104+19.45

TYPICAL SECTION
STA. 2926+23.77 TO STA. 2926+69.18

0 2.5 5 10
SCALE IN FEET

NO.	DATE	BY	CHECK	DESIGN	REVISION / SUBMITTAL

AECOM

90% SUBMISSION - 01/22/16

METROPOLITAN COUNCIL

SOUTHWEST Green Line LRT Extension

CIVIL - VOLUME 3B
TRACK
TYPICAL SECTIONS

DISCIPLINE: TRACK

SHEET NAME: E4-TRK-TYP-029

SHEET 200 OF 420

Jan, 15 2016 10:47 am V:\3400_ADC\CAD\00_EAST\PLANSHEETS\TRACK\E4-TRK-TYP.dwg By: V-Rasull

NOTES:
1. TRACK CENTERS VARY IN CURVE E4–208. SEE TRACK PLANS.
2. SEE RETAINING WALL PLANS FOR DETAILS.
3. SEE SYSTEMS PLANS FOR DUCTBANK AND CABLE TROUGH DETAILS.
4. FOR GUARD RAIL LIMITS SEE TRACK CHART.
5. FOR DITCH INVERT AND DETAILS, SEE DRAINAGE PLANS.
6. SELECT GRANULAR ABOVE LOAD TRANSFER PLATFORM (LTP). SEE RETAINING WALL PLANS FOR DETAILS.
7. SELECT GRANULAR DEPTH (BNSF WAYZATA SUBDIVISION): LRT STA 2926+69.18: 2.00'; LRT STA 2926+90.00 TO STA 2927+29.46: 1.00'. TRANSITION LINEARLY BETWEEN STA 2926+69.18 AND STA 2926+90.00.
8. TRANSITION FROM 8.00' TO 7.00' BETWEEN LRT STA 2926+69.18 AND LRT STA 2926+90.00.
9. SEE URBAN DESIGN PLANS FOR FENCE LOCATIONS AND DETAILS.

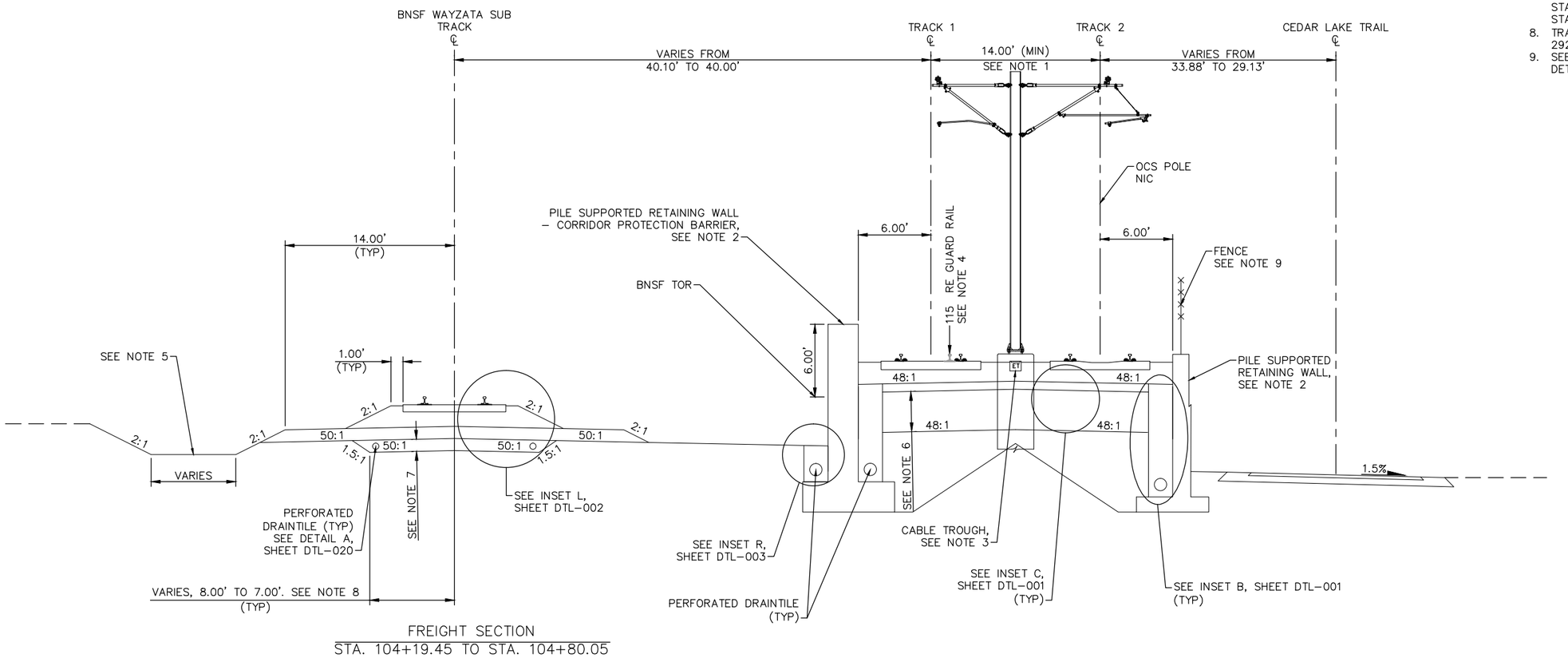

FREIGHT SECTION
STA. 104+19.45 TO STA. 104+80.05

TYPICAL SECTION
STA. 2926+69.18 TO STA. 2927+29.46

SCALE 0 2.5 5 10 IN FEET

NO.	DATE	BY	CHECK	DESIGN	REVISION / SUBMITTAL

AECOM

90% SUBMISSION - 01/22/16

METROPOLITAN COUNCIL

SOUTHWEST Green Line LRT Extension

CIVIL - VOLUME 3B
TRACK
TYPICAL SECTIONS

DISCIPLINE: TRACK

SHEET NAME: E4-TRK-TYP-030

SHEET 201 OF 420

Jan, 15 2016 10:47 am V:\3400_ADC\CAD\00_EAST\PLANSHEETS\TRACK\E4-TRK-TYP.dwg By: V-RasulL

NOTES:
1. TRACK CENTERS VARY IN CURVE E4–208. SEE TRACK PLANS.
2. SEE RETAINING WALL PLANS FOR DETAILS.
3. SEE SYSTEMS PLANS FOR DUCTBANK AND CABLE TROUGH DETAILS.
4. FOR GUARD RAIL LIMITS SEE TRACK CHART.
5. SELECT GRANULAR ABOVE LOAD TRANSFER PLATFORM (LTP). SEE RETAINING WALL PLANS FOR DETAILS.
6. SEE URBAN DESIGN PLANS FOR FENCE LOCATIONS AND DETAILS.

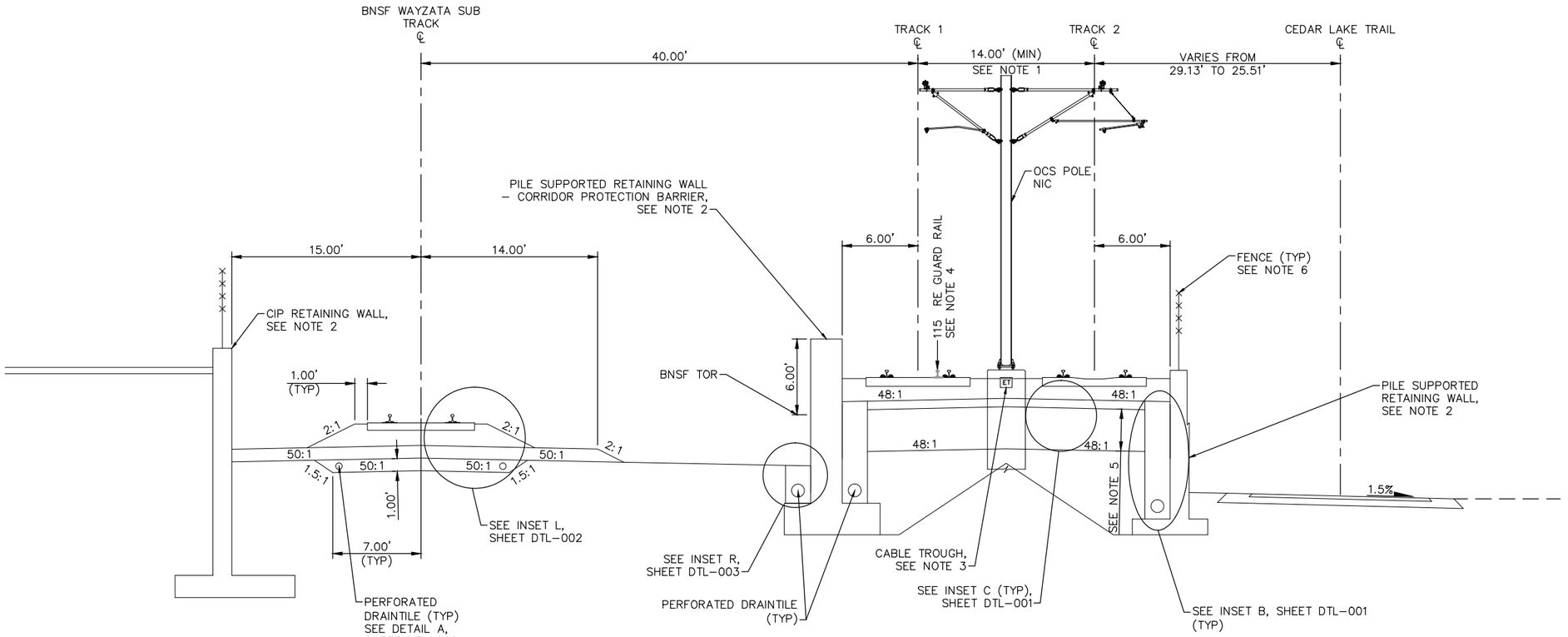

FREIGHT SECTION
STA. 104+80.05 TO STA. 105+40.61

TYPICAL SECTION
STA. 2927+29.46 TO STA. 2927+90.00

0 2.5 5 10
SCALE IN FEET

NO.	DATE	BY	CHECK	DESIGN	REVISION / SUBMITTAL

AECOM

90% SUBMISSION - 01/22/16

METROPOLITAN COUNCIL

SOUTHWEST Green Line LRT Extension

CIVIL - VOLUME 3B
TRACK
TYPICAL SECTIONS

DISCIPLINE: TRACK

SHEET NAME: E4-TRK-TYP-031

SHEET 202 OF 420

Jan, 15 2016 10:47 am V:\3400_ADC\CAD\00_EAST\PLANSHEETS\TRACK\E4-TRK-TYP.dwg By: V-RasulL

NOTES:
1. TRACK CENTERS VARY IN CURVE E4–209A. SEE TRACK PLANS.
2. SEE RETAINING WALL PLANS FOR DETAILS.
3. SEE SYSTEMS PLANS FOR DUCTBANK AND CABLE TROUGH DETAILS.
4. FOR GUARD RAIL LIMITS SEE TRACK CHART.
5. FOR DITCH INVERT AND DETAILS, SEE DRAINAGE PLANS.
6. SELECT GRANULAR ABOVE LOAD TRANSFER PLATFORM (LTP). SEE RETAINING WALL PLANS FOR DETAILS.
7. SEE URBAN DESIGN PLANS FOR FENCE LOCATIONS AND DETAILS.

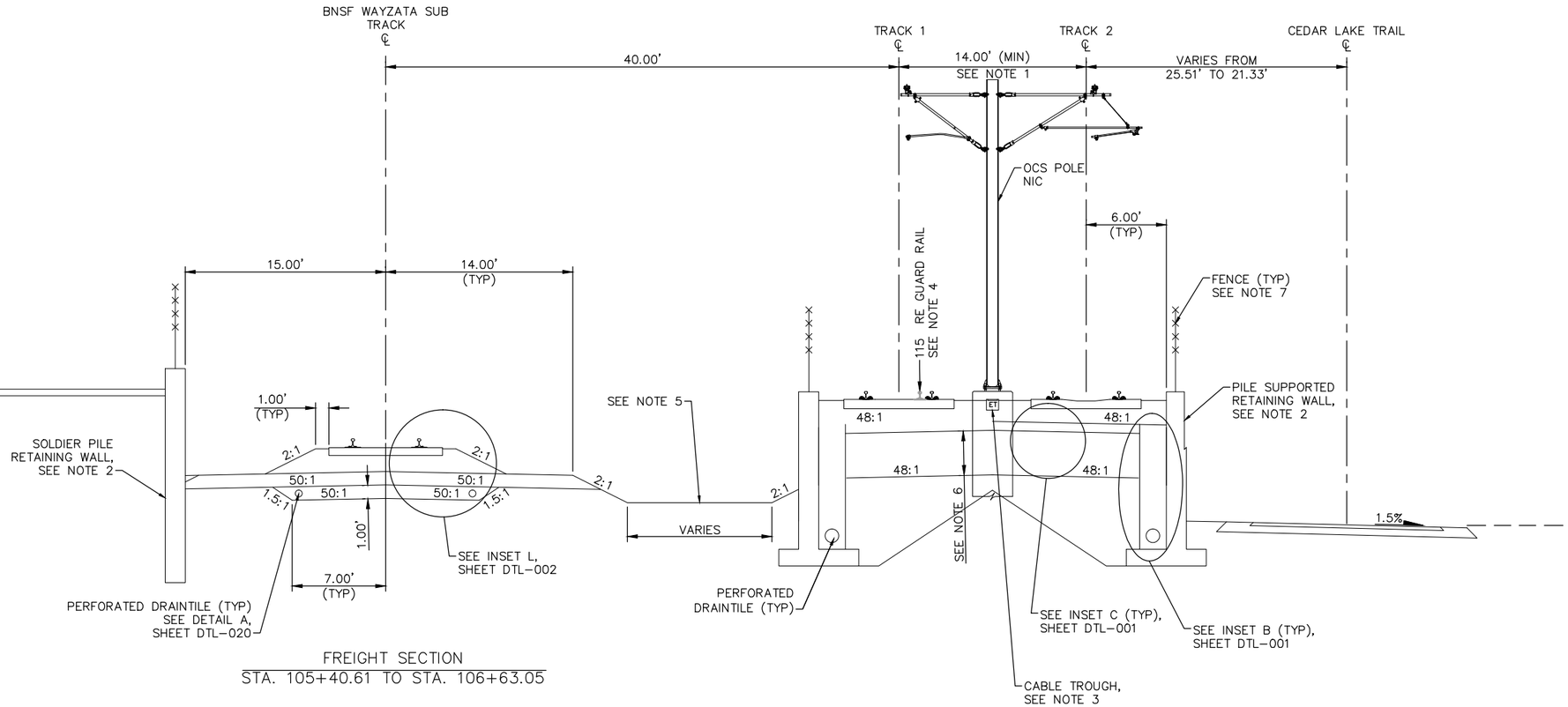

FREIGHT SECTION
STA. 105+40.61 TO STA. 106+63.05

TYPICAL SECTION
STA. 2927+90.00 TO STA. 2929+12.13

SCALE 0 2.5 5 10 IN FEET

NO.	DATE	BY	CHECK	DESIGN	REVISION / SUBMITTAL

AECOM

90% SUBMISSION - 01/22/16

METROPOLITAN COUNCIL

SOUTHWEST Green Line LRT Extension

CIVIL - VOLUME 3B
TRACK
TYPICAL SECTIONS

DISCIPLINE: TRACK

SHEET NAME: E4-TRK-TYP-032

SHEET 203 OF 420

Jan, 15 2016 10:47 am V:\3400_ADC\CAD\00_EAST\PLANSHEETS\TRACK\E4-TRK-TYP.dwg By: V-RasulL

NOTES:
1. TRACK CENTERS VARY IN CURVE E4–209A. SEE TRACK PLANS.
2. SEE RETAINING WALL PLANS FOR DETAILS.
3. SEE SYSTEMS PLANS FOR DUCTBANK AND CABLE TROUGH DETAILS.
4. FOR GUARD RAIL LIMITS SEE TRACK CHART.
5. FOR DITCH INVERT AND DETAILS, SEE DRAINAGE PLANS.
6. SELECT GRANULAR ABOVE LOAD TRANSFER PLATFORM (LTP). SEE RETAINING WALL PLANS FOR DETAILS.
7. SEE URBAN DESIGN PLANS FOR FENCE LOCATIONS AND DETAILS.

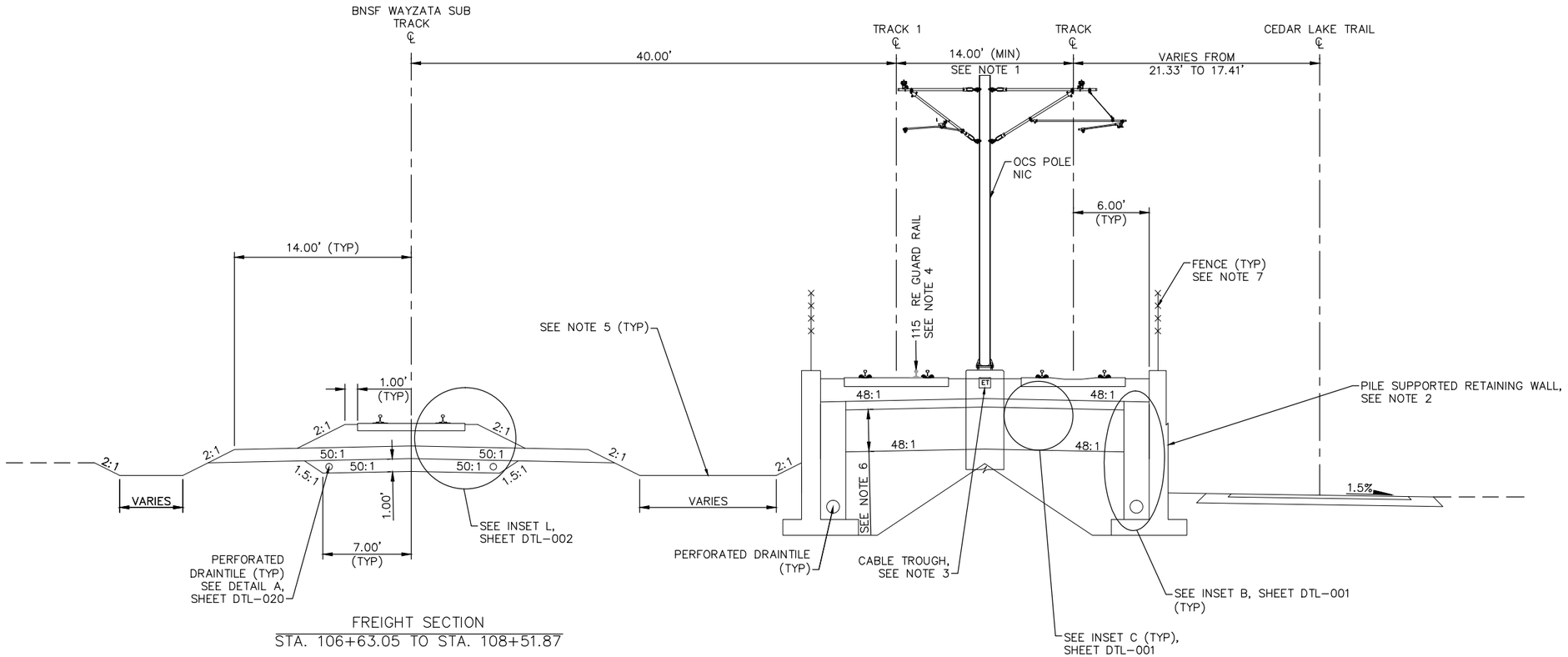

FREIGHT SECTION
STA. 106+63.05 TO STA. 108+51.87

TYPICAL SECTION
STA. 2929+12.43 TO STA. 2931+01.96

SCALE 0 2.5 5 10 IN FEET

NO.	DATE	BY	CHECK	DESIGN	REVISION / SUBMITTAL

AECOM

90% SUBMISSION - 01/22/16

METROPOLITAN COUNCIL

SOUTHWEST Green Line LRT Extension

CIVIL - VOLUME 3B
TRACK
TYPICAL SECTIONS

SHEET 204 OF 420

DISCIPLINE: TRACK

SHEET NAME: E4-TRK-TYP-033

Jan, 15 2016 10:48 am V:\3400_ADC\CAD\00_EAST\PLANSHEETS\TRACK\E4-TRK-TYP.dwg By: V-RasulL

NOTES:
1. TRACK CENTERS VARY IN CURVE E4–209A. SEE TRACK PLANS.
2. MnDOT BRIDGE R0697. SEE STRUCTURAL PLANS.
3. SEE SYSTEMS PLANS FOR DUCTBANK AND CABLE TROUGH DETAILS.
4. FOR GUARD ANGLE LIMITS SEE TRACK CHART.
5. FOR DITCH INVERT AND DETAILS, SEE DRAINAGE PLANS.

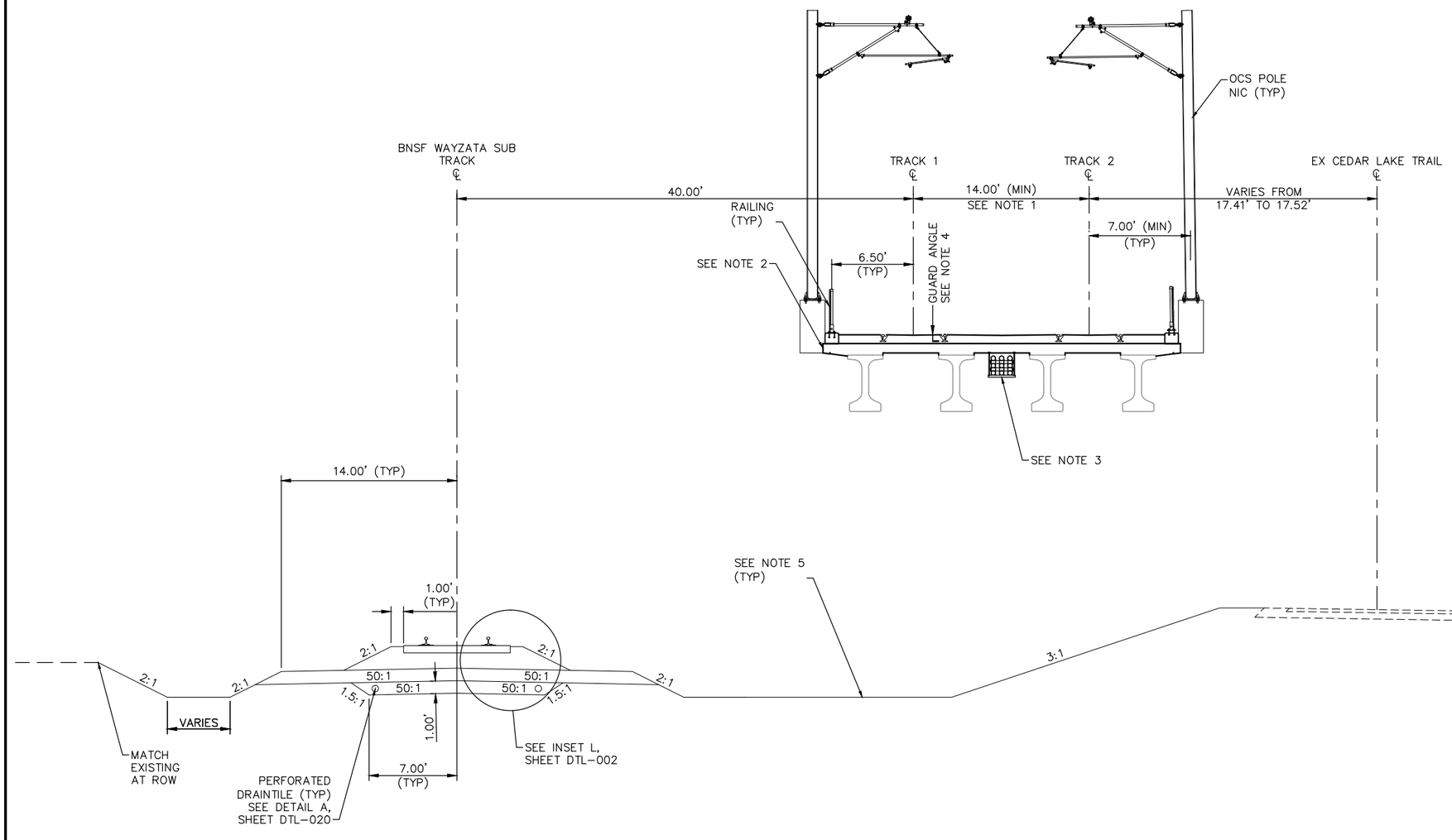

FREIGHT SECTION
STA. 108+51.87 TO STA. 108+81.24

TYPICAL SECTION
STA. 2931+01.96 TO STA. 2931+31.71

0 2.5 5 10
SCALE IN FEET

NO.	DATE	BY	CHECK	DESIGN	REVISION / SUBMITTAL

AECOM

90% SUBMISSION - 01/22/16

METROPOLITAN COUNCIL

SOUTHWEST Green Line LRT Extension

CIVIL - VOLUME 3B
TRACK
TYPICAL SECTIONS

DISCIPLINE: TRACK

SHEET NAME: E4-TRK-TYP-034

SHEET 205 OF 420

Jan, 15 2016 10:48 am V:\3400_ADC\CAD\00_EAST\PLANSHEETS\TRACK\E4-TRK-TYP.dwg By: V-RasulL

NOTES:
1. TRACK CENTERS VARY IN CURVE E4–209A. SEE TRACK PLANS.
2. MnDOT BRIDGE R0697. SEE STRUCTURAL PLANS.
3. SEE RETAINING WALL PLANS FOR DETAILS.
4. SEE SYSTEMS PLANS FOR DUCTBANK AND CABLE TROUGH DETAILS.
4. FOR GUARD ANGLE LIMITS SEE TRACK CHART.
5. FOR DITCH INVERT AND DETAILS, SEE DRAINAGE PLANS.
6. SELECT GRANULAR DEPTH (BNSF WAYZATA SUB):
   LRT STA 2931+31.71 TO STA 2933+93.00: 1.00'; LRT STA 2934+13.52: 2.00'. TRANSITION LINEARLY BETWEEN STA 2933+93.00 AND STA 2934+13.52.
7. TRANSITION FROM 7.00' TO 8.00' BETWEEN STA 2933+93.00 AND STA 2934+13.52.

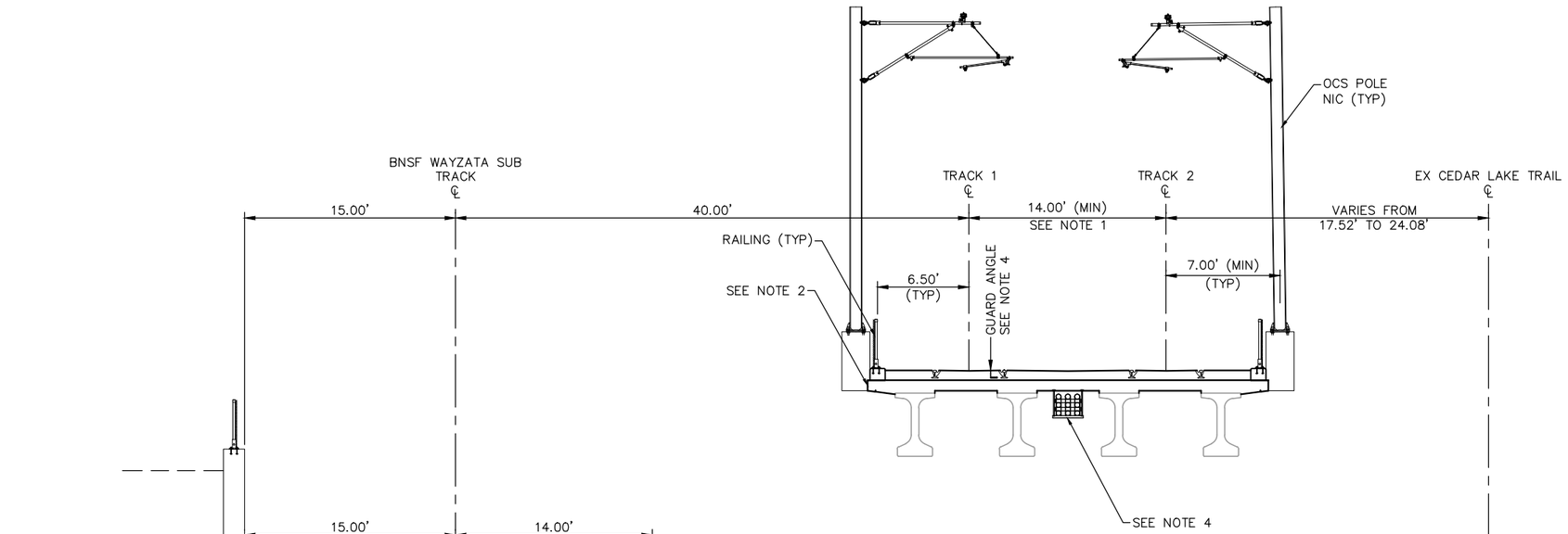

FREIGHT SECTION
STA. 108+81.24 TO STA. 111+59.06

TYPICAL SECTION
STA. 2931+31.71 TO STA. 2934+13.52

SCALE 0 2.5 5 10 IN FEET

NO.	DATE	BY	CHECK	DESIGN	REVISION / SUBMITTAL

AECOM

90% SUBMISSION - 01/22/16

METROPOLITAN COUNCIL

SOUTHWEST Green Line LRT Extension

CIVIL - VOLUME 3B
TRACK
TYPICAL SECTIONS

DISCIPLINE: TRACK

SHEET NAME: E4-TRK-TYP-035

SHEET 206 OF 420

Jan. 15 2016 10:48 am v:\3400_ADC\CAD\00_EAST\PLANSHEETS\TRACK\E4-TRK-TYP.dwg By: V-RasulL

NOTES:
1. TRACK CENTERS VARY IN CURVE E4–209A. SEE TRACK PLANS.
2. MnDOT BRIDGE R0697. SEE STRUCTURAL PLANS.
3. MnDOT BRIDGE 27C16. SEE STRUCTURAL PLANS.
4. MnDOT BRIDGE 27C17. SEE STRUCTURAL PLANS.
5. SEE SYSTEMS PLANS FOR DUCTBANK AND CABLE TROUGH DETAILS.

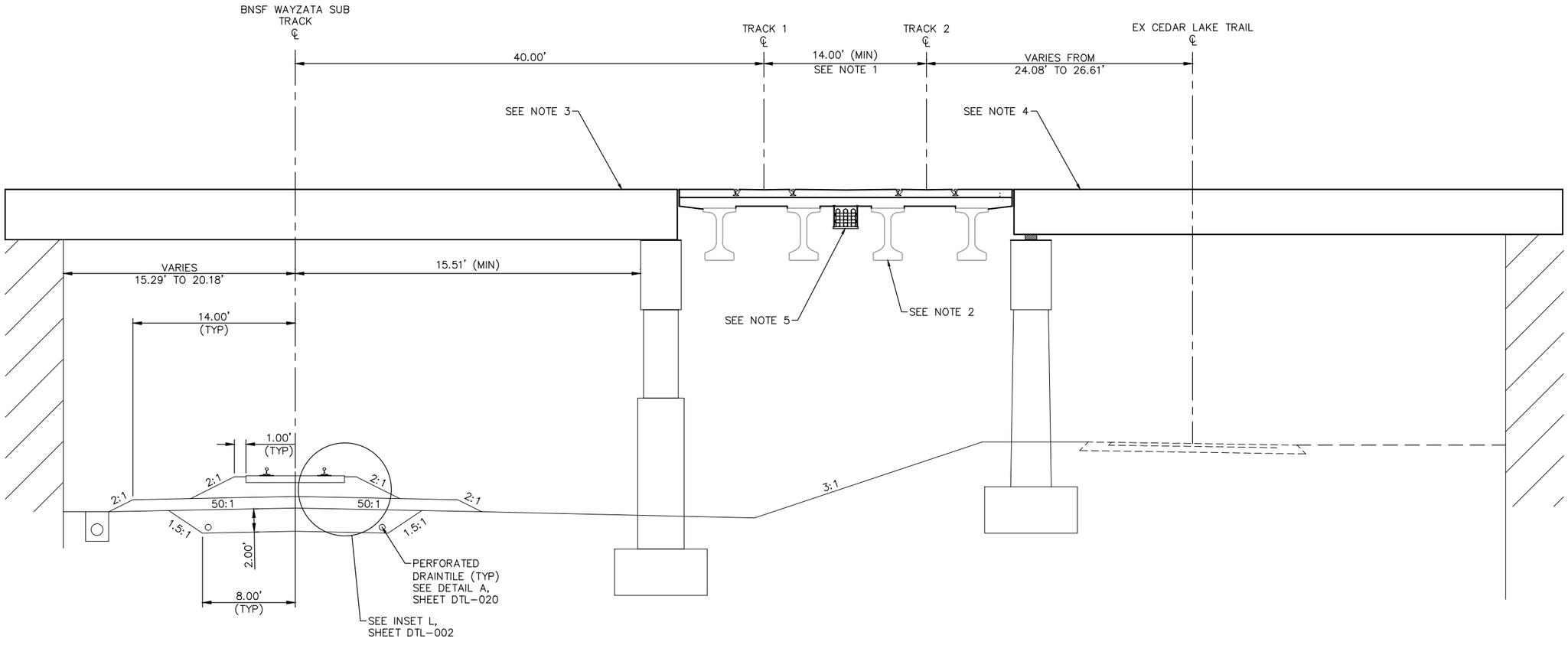

FREIGHT SECTION
STA. 111+59.06 TO STA. 113+54.44

TYPICAL SECTION
STA. 2934+13.52 STA. 2936+11.72

0 2.5 5 10
SCALE IN FEET

NO.	DATE	BY	CHECK	DESIGN	REVISION / SUBMITTAL

AECOM

90% SUBMISSION - 01/22/16

METROPOLITAN COUNCIL

SOUTHWEST Green Line LRT Extension

CIVIL - VOLUME 3B
TRACK
TYPICAL SECTIONS

DISCIPLINE: TRACK

SHEET NAME: E4-TRK-TYP-036

SHEET 207 OF 420

Jan. 15 2016 10:48 am V:\3400_ADC\CAD\00_EAST\PLANSHEETS\TRACK\E4-TRK-TYP.dwg By: V-RasulL

NOTES:
1. TRACK CENTERS VARY IN CURVE E4–209A. SEE TRACK PLANS.
2. MnDOT BRIDGE R0697. SEE STRUCTURAL PLANS.
3. SEE RETAINING WALL PLANS FOR DETAILS.
4. SEE SYSTEMS PLANS FOR DUCTBANK AND CABLE TROUGH DETAILS.
5. FOR GUARD ANGLE LIMITS SEE TRACK CHART.
6. FOR DITCH INVERT AND DETAILS, SEE DRAINAGE PLANS.

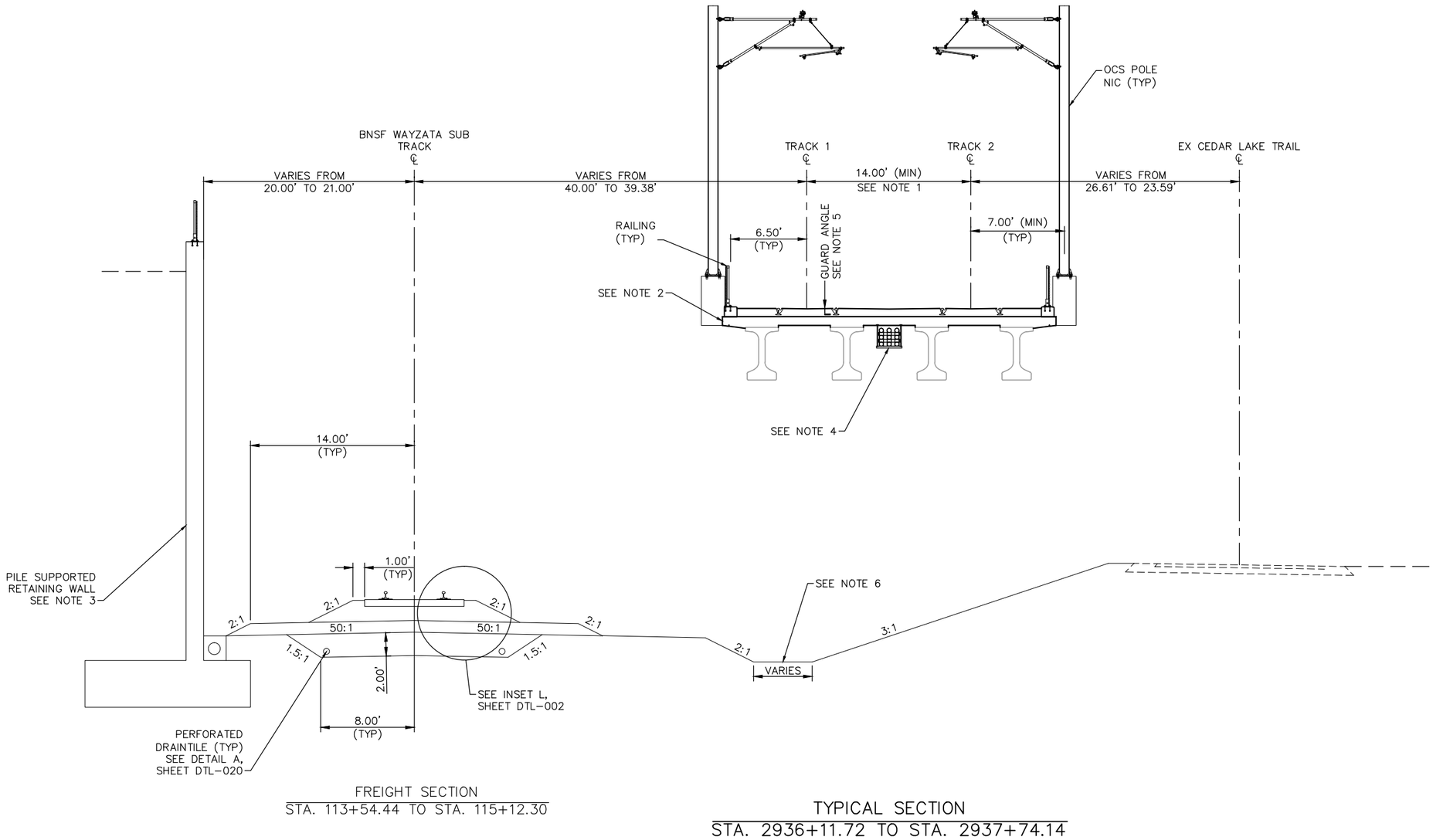

FREIGHT SECTION
STA. 113+54.44 TO STA. 115+12.30

TYPICAL SECTION
STA. 2936+11.72 TO STA. 2937+74.14

0 2.5 5 10
SCALE IN FEET

NO.	DATE	BY	CHECK	DESIGN	REVISION / SUBMITTAL

AECOM

90% SUBMISSION - 01/22/16

METROPOLITAN COUNCIL

SOUTHWEST Green Line LRT Extension

CIVIL - VOLUME 3B
TRACK
TYPICAL SECTIONS

DISCIPLINE: TRACK

SHEET NAME: E4-TRK-TYP-037

SHEET 208 OF 420

Jan, 15 2016 10:48 am V:\3400_ADC\CAD\00_EAST\PLANSHEETS\TRACK\E4-TRK-TYP.dwg By: V-RasulL

NOTES:
1. TRACK CENTERS VARY IN CURVE E4–209B. SEE TRACK PLANS.
2. MnDOT BRIDGE R0697. SEE STRUCTURAL PLANS.
3. SEE RETAINING WALL PLANS FOR DETAILS.
4. SEE SYSTEMS PLANS FOR DUCTBANK AND CABLE TROUGH DETAILS.
5. FOR GUARD RAIL LIMITS SEE TRACK CHART.
6. FOR DITCH INVERT AND DETAILS, SEE DRAINAGE PLANS.
7. SEE TRACK DETAIL FOR PLINTH LAYOUT.

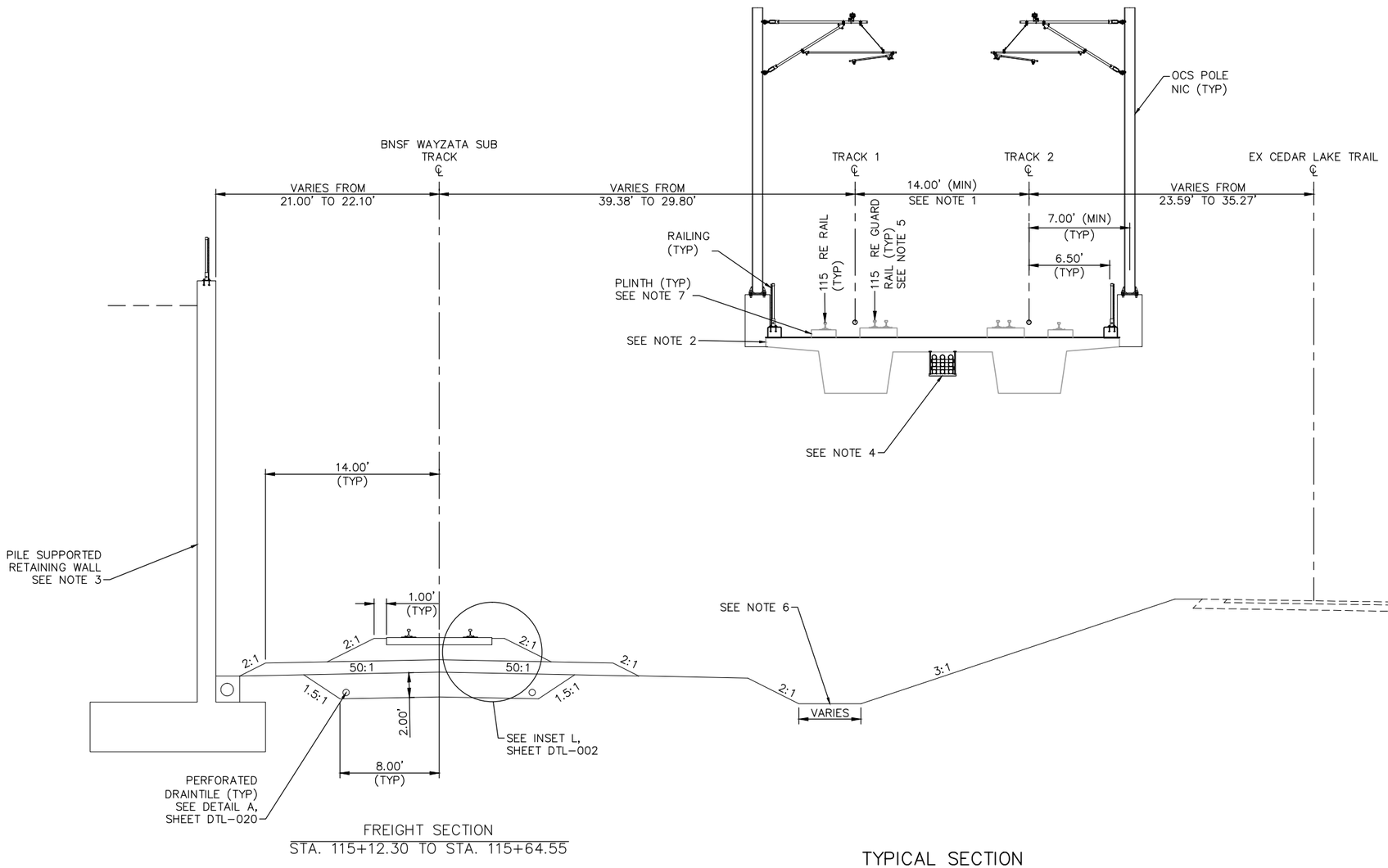

FREIGHT SECTION
STA. 115+12.30 TO STA. 115+64.55

TYPICAL SECTION
STA. 2937+74.14 TO STA. 2938+38.37

SCALE 0 2.5 5 10 IN FEET

NO.	DATE	BY	CHECK	DESIGN	REVISION / SUBMITTAL

AECOM

90% SUBMISSION - 01/22/16

METROPOLITAN COUNCIL

SOUTHWEST Green Line LRT Extension

CIVIL - VOLUME 3B
TRACK
TYPICAL SECTIONS

SHEET 209 OF 420

DISCIPLINE: TRACK

SHEET NAME: E4-TRK-TYP-038

Jan. 15 2016 10:49 am V:\3400_ADC\CAD\00_EAST\PLANSHEETS\TRACK\E4-TRK-TYP.dwg By: V-RasulL

NOTES:
1. TRACK CENTERS VARY IN CURVE E4–209B. SEE TRACK PLANS.
2. MnDOT BRIDGE R0697. SEE STRUCTURAL PLANS.
3. SEE RETAINING WALL PLANS FOR DETAILS.
4. SEE SYSTEMS PLANS FOR DUCTBANK AND CABLE TROUGH DETAILS.
5. FOR GUARD RAIL LIMITS SEE TRACK CHART.
6. FOR DITCH INVERT AND DETAILS, SEE DRAINAGE PLANS.
7. SEE TRACK DETAILS FOR PLINTH LAYOUT.

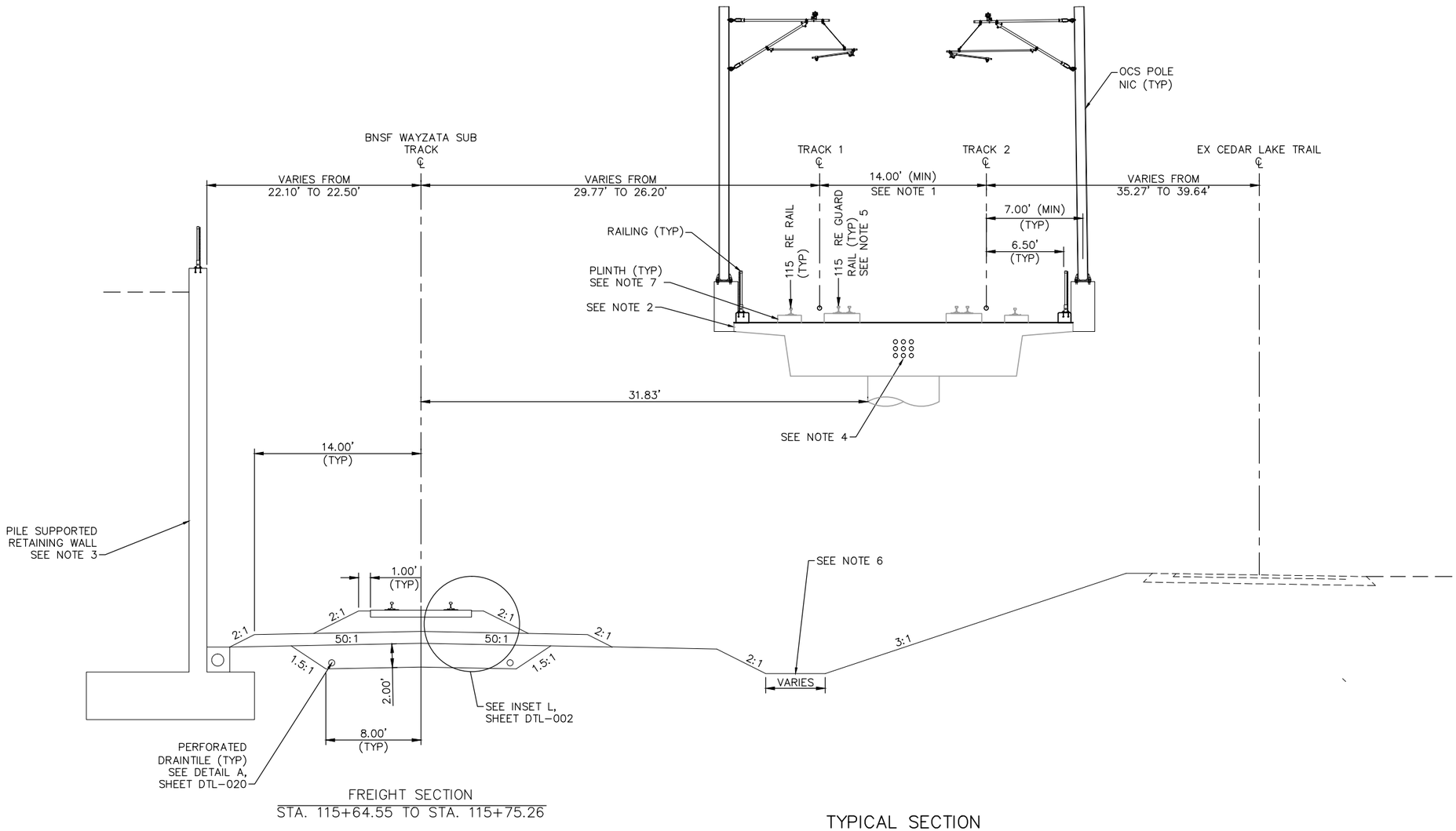

FREIGHT SECTION
STA. 115+64.55 TO STA. 115+75.26

TYPICAL SECTION
STA. 2938+38.37 TO STA. 2938+50.57

0 2.5 5 10
SCALE IN FEET

NO.	DATE	BY	CHECK	DESIGN	REVISION / SUBMITTAL

AECOM

90% SUBMISSION - 01/22/16

METROPOLITAN COUNCIL

SOUTHWEST Green Line LRT Extension

CIVIL - VOLUME 3B
TRACK
TYPICAL SECTIONS

DISCIPLINE: TRACK

SHEET NAME: E4-TRK-TYP-039

SHEET 210 OF 420

Jan, 15 2016 10:49 am V:\3400_ADC\CAD\00_EAST\PLANSHEETS\TRACK\E4-TRK-TYP.dwg By: V-RasulL

NOTES:
1. TRACK CENTERS VARY IN CURVE E4–209B. SEE TRACK PLANS.
2. MnDOT BRIDGE R0697. SEE STRUCTURAL PLANS.
3. SEE RETAINING WALL PLANS FOR DETAILS.
4. SEE SYSTEMS PLANS FOR DUCTBANK AND CABLE TROUGH DETAILS.
5. FOR CONTINUATION OF BNSF TYPICAL SECTIONS, SEE SHEETS FROM E4–TRK–TYP–052 THROUGH E4–TRK–TYP–055.
6. GUARD RAIL LIMITS SEE TRACK CHART.
7. SEE TRACK DETAILS FOR PLINTH LAYOUT.

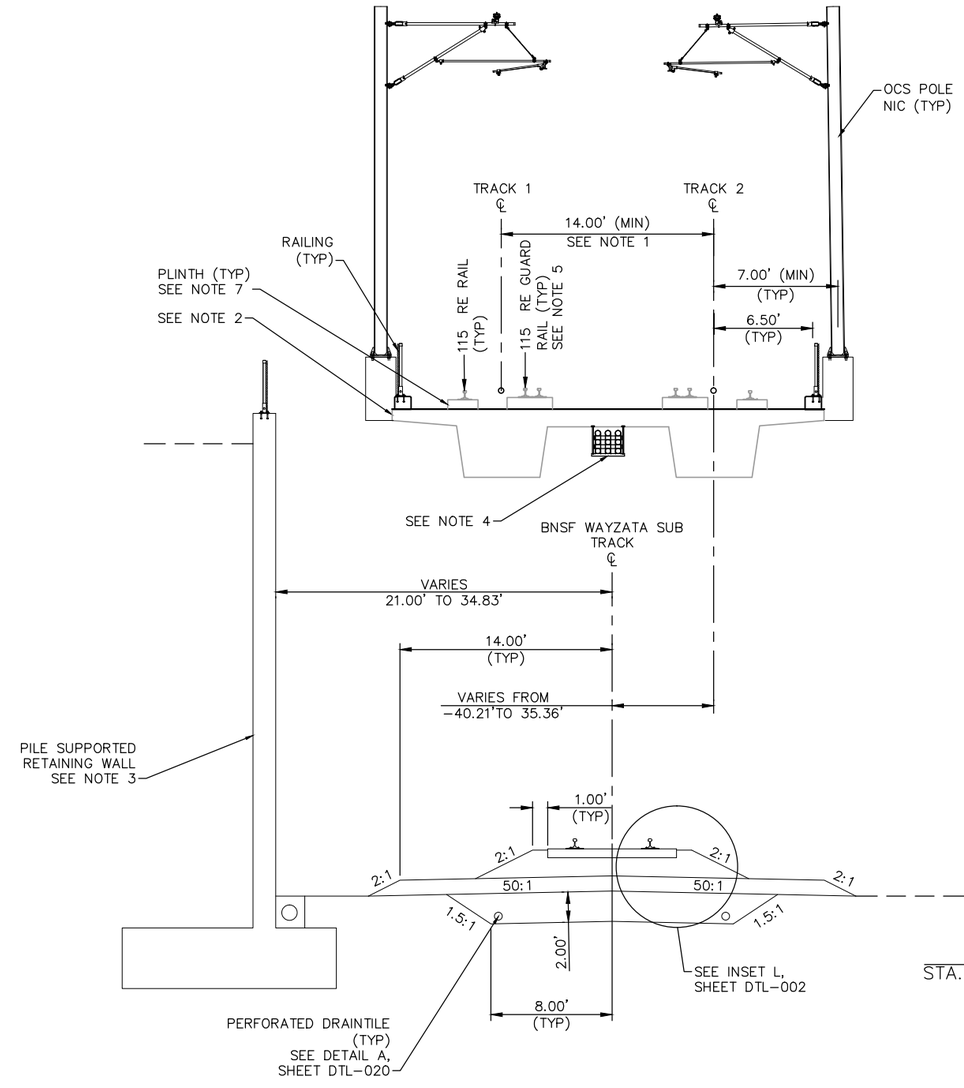

FREIGHT SECTION
STA. 115+75.26 TO 117+07.06 (SEE NOTE 5)

TYPICAL SECTION
STA. 2938+50.57 TO STA. 2939+61.96

0 2.5 5 10
SCALE IN FEET

NO.	DATE	BY	CHECK	DESIGN	REVISION / SUBMITTAL

AECOM

90% SUBMISSION - 01/22/16

METROPOLITAN COUNCIL

SOUTHWEST Green Line LRT Extension

CIVIL - VOLUME 3B
TRACK
TYPICAL SECTIONS

DISCIPLINE: TRACK

SHEET NAME: E4-TRK-TYP-040

SHEET 211 OF 420

Jan, 15 2016 10:49 am V:\3400_ADC\CAD\00_EAST\PLANSHEETS\TRACK\E4–TRK–TYP.dwg By: V–RasulL

NOTES:
1. TRACK CENTERS VARY IN CURVE E4–209B. SEE TRACK PLANS.
2. SEE SYSTEMS PLANS FOR DUCTBANK AND CABLE TROUGH DETAILS.
3. FOR INSETS SEE CIVIL PLANS.
4. SEE URBAN DESIGN PLANS FOR FENCE LOCATIONS AND DETAILS.

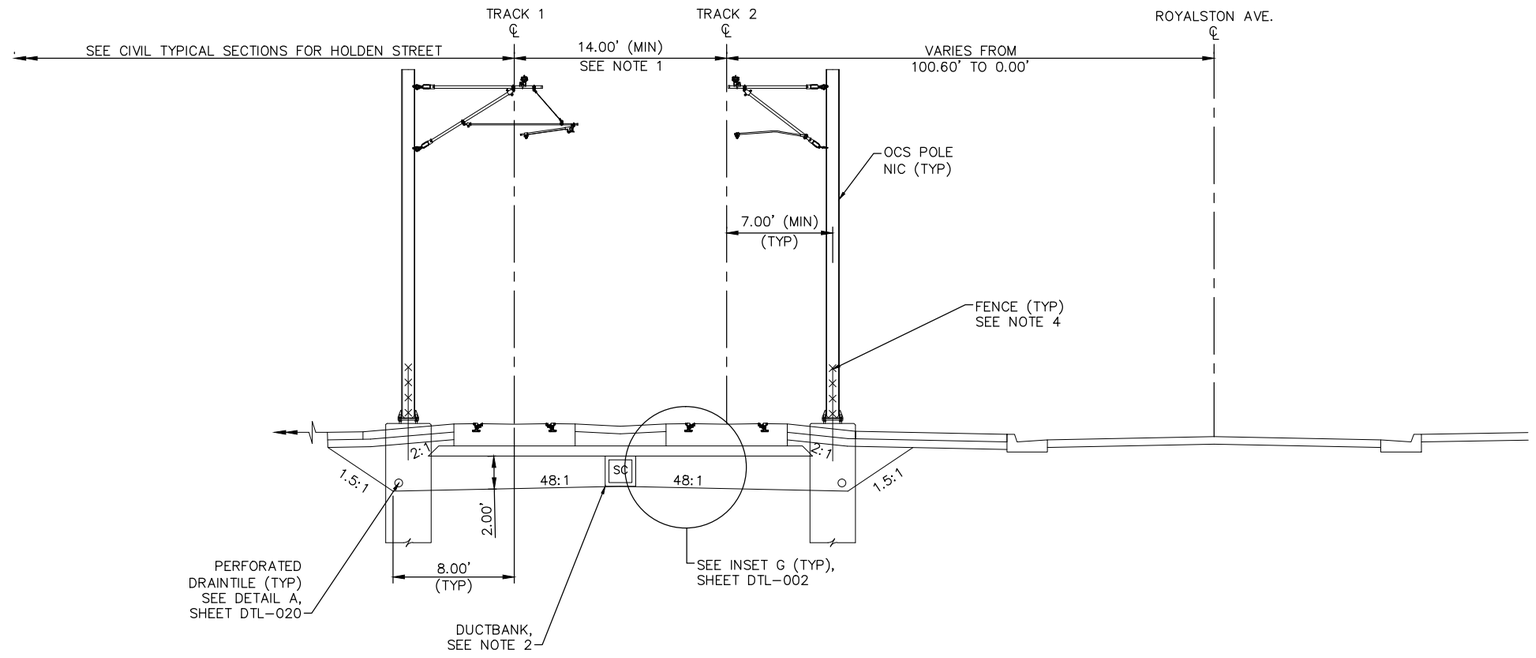

TYPICAL SECTION
STA. 2939+60.63 TO STA. 2940+57.20

0 2.5 5 10
SCALE IN FEET

NO.	DATE	BY	CHECK	DESIGN	REVISION / SUBMITTAL

AECOM

90% SUBMISSION - 01/22/16

METROPOLITAN COUNCIL

SOUTHWEST Green Line LRT Extension

CIVIL - VOLUME 3B
TRACK
TYPICAL SECTIONS

DISCIPLINE: TRACK

SHEET NAME: E4-TRK-TYP-041

SHEET 212 OF 420

Jan, 15 2016 10:49 am V:\3400_ADC\CAD\00_EAST\PLANSHEETS\TRACK\E4-TRK-TYP.dwg By: V-RasulL

NOTES:
1. TRACK CENTERS VARY IN CURVE E4–209B. SEE TRACK PLANS.
2. SEE SYSTEMS PLANS FOR DUCTBANK AND CABLE TROUGH DETAILS.
3. SEE URBAN DESIGN PLANS FOR FENCE LOCATIONS AND DETAILS.
4. SELECT GRANULAR DEPTH: STA 2940+57.20: 2.00'; STA 2940+78.00 TO STA 2943+71.52: 1.00'. TRANSITION LINEARLY BETWEEN STA 2940+57.20 AND STA 2940+78.00.
5. TRANSITION FROM 8.00' TO 7.00' BETWEEN STA 2940+57.20 AND 5940+78.00.

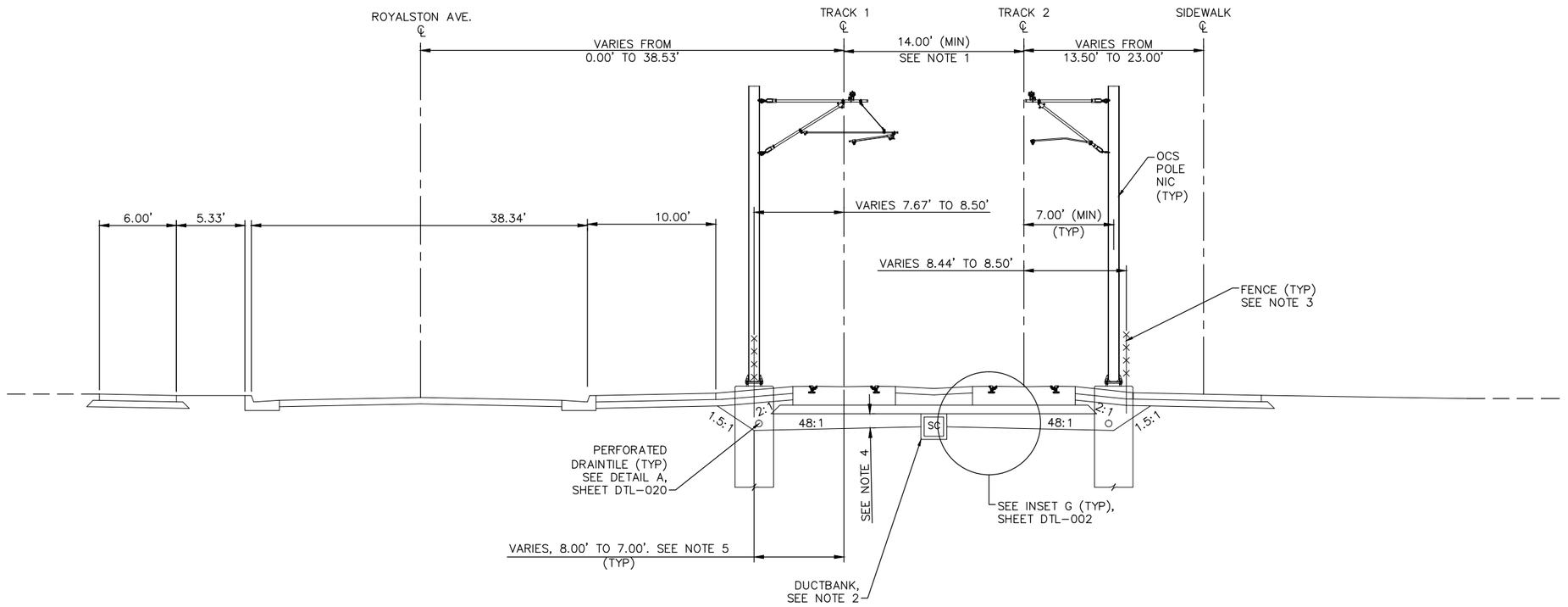

TYPICAL SECTION
STA. 2940+57.20 TO STA. 2943+71.52

0 2.5 5 10
SCALE IN FEET

NO.	DATE	BY	CHECK	DESIGN	REVISION / SUBMITTAL

AECOM

90% SUBMISSION - 01/22/16

METROPOLITAN COUNCIL

SOUTHWEST
Green Line LRT Extension

CIVIL - VOLUME 3B
TRACK
TYPICAL SECTIONS

DISCIPLINE: TRACK

SHEET NAME: E4-TRK-TYP-042

SHEET 213 OF 420

Jan, 15 2016 10:49 am V:\3400_ADC\CAD\00_EAST\PLANSHEETS\TRACK\E4-TRK-TYP.dwg By: V-RasulL

NOTES:
1. SEE RETAINING WALL PLANS FOR DETAILS.
2. SEE SYSTEMS PLANS FOR DUCTBANK AND CABLE TROUGH DETAILS.
3. SEE URBAN DESIGN PLANS FOR FENCE LOCATIONS AND DETAILS.
4. SELECT GRANULAR DEPTH:
   STA 2943+71.52 TO STA 2943+98.00: 1.00'; STA 2944+28.50: 2.50'. TRANSITION LINEARLY BETWEEN STA 2943+98.00 AND STA 2944+28.50.
5. TRANSITION FROM 7.00' TO 8.50' BETWEEN STA 2943+98.00 AND STA 2944+28.50.

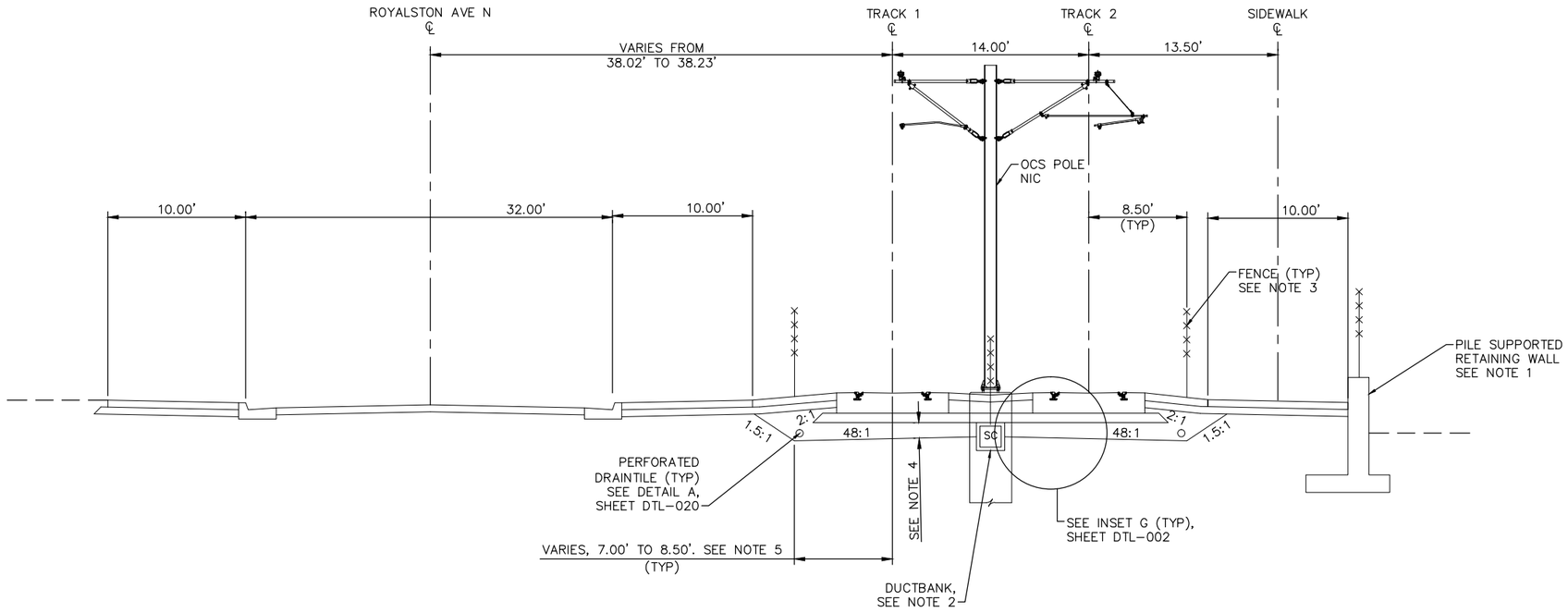

TYPICAL SECTION
STA. 2943+71.52 TO STA. 2944+28.50

0 2.5 5 10
SCALE IN FEET

NO.	DATE	BY	CHECK	DESIGN	REVISION / SUBMITTAL

AECOM

90% SUBMISSION - 01/22/16

METROPOLITAN COUNCIL

SOUTHWEST Green Line LRT Extension

CIVIL - VOLUME 3B
TRACK
TYPICAL SECTIONS

SHEET 214 OF 420

DISCIPLINE: TRACK

SHEET NAME: E4-TRK-TYP-043

Jan, 15 2016 10:50 am V:\3400_ADC\CAD\00_EAST\PLANSHEETS\TRACK\E4-TRK-TYP.dwg By: V-RasulL

NOTES:
1. SEE RETAINING WALL PLANS FOR DETAILS.
2. SEE STATION PLANS FOR STATION PLATFORM DETAILS.
3. SEE SYSTEMS PLANS FOR DUCTBANK AND CABLE TROUGH DETAILS.
4. SEE URBAN DESIGN PLANS FOR FENCE LOCATIONS AND DETAILS.

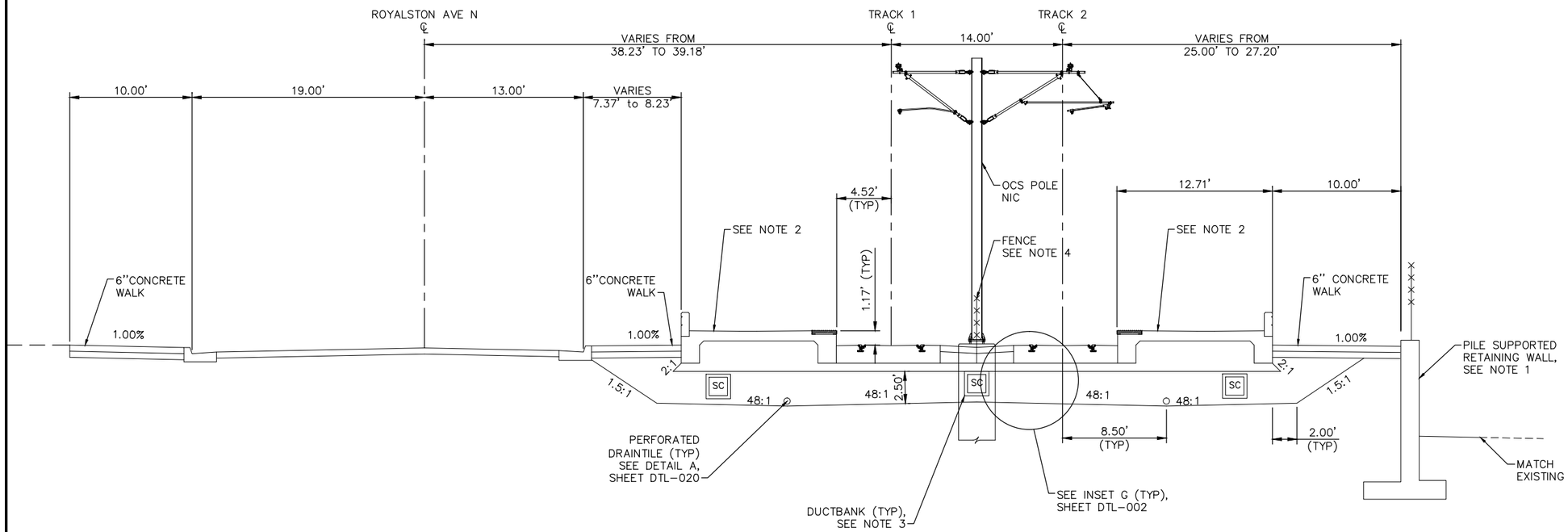

TYPICAL SECTION – ROYALSTON STATION
STA. 2944+28.50 TO STA. 2946+98.50

0 2.5 5 10
SCALE IN FEET

NO.	DATE	BY	CHECK	DESIGN	REVISION / SUBMITTAL

AECOM

90% SUBMISSION - 01/22/16

METROPOLITAN COUNCIL

SOUTHWEST
Green Line LRT Extension

CIVIL - VOLUME 3B
TRACK
TYPICAL SECTIONS

DISCIPLINE: TRACK

SHEET NAME: E4-TRK-TYP-044

SHEET 215 OF 420

Jan, 15 2016 10:50 am v:\3400_ADC\CAD\00_EAST\PLANSHEETS\TRACK\E4-TRK-TYP.dwg By: V-RasulL

NOTES:
1. SEE RETAINING WALL PLANS FOR DETAILS.
2. SEE RETAINING WALL PLANS FOR DETAILS.
3. SEE SYSTEMS PLANS FOR DUCTBANK AND CABLE TROUGH DETAILS.
4. SEE URBAN DESIGN PLANS FOR FENCE LOCATIONS AND DETAILS.
5. SELECT GRANULAR DEPTH: STA 2946+98.50: 2.50'; STA 2947+29.00 TO STA 2947+38.50: 1.00'. TRANSITION LINEARLY BETWEEN STA 2946+98.50 AND 2947+29.00.
6. TRANSITION FROM 8.50' TO 7.00' BETWEEN STA 2946+98.50 AND STA 2947+29.00.

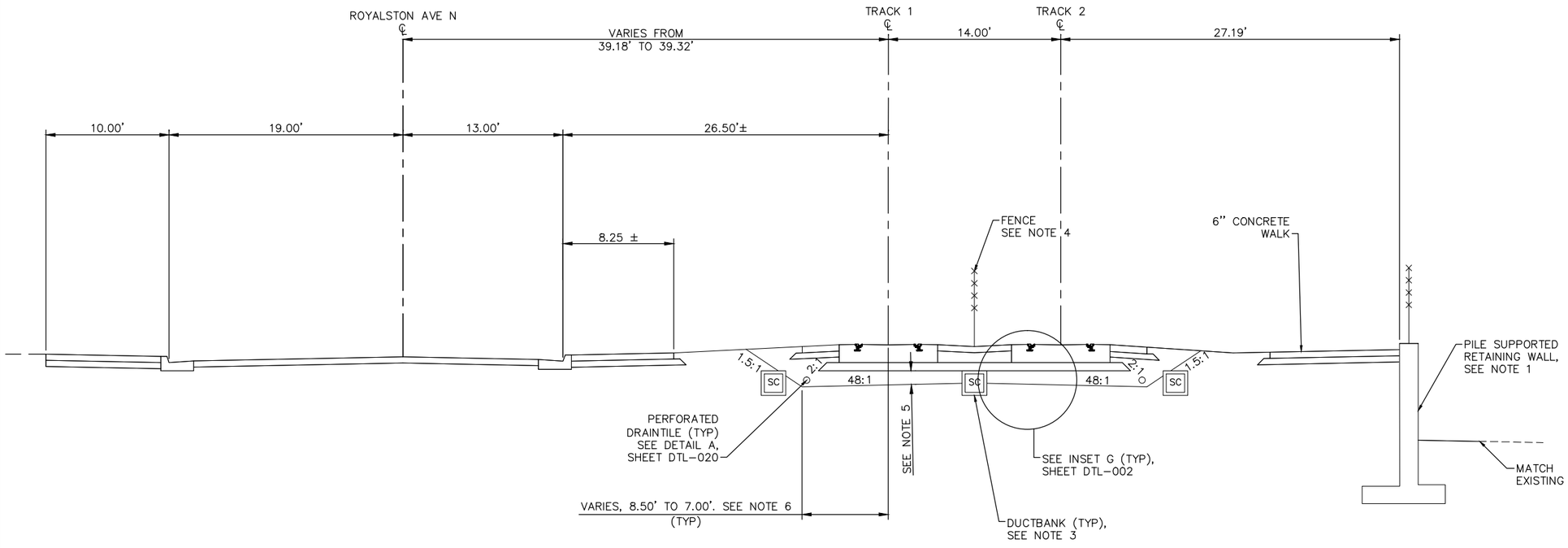

TYPICAL SECTION
STA. 2946+98.50 TO STA. 2947+38.50

0 2.5 5 10
SCALE IN FEET

NO.	DATE	BY	CHECK	DESIGN	REVISION / SUBMITTAL

AECOM

90% SUBMISSION - 01/22/16

METROPOLITAN COUNCIL

SOUTHWEST
Green Line LRT Extension

CIVIL - VOLUME 3B
TRACK
TYPICAL SECTIONS

DISCIPLINE: TRACK

SHEET NAME: E4-TRK-TYP-045

SHEET 216 OF 420

Jan, 15 2016 10:50 am V:\3400_ADC\CAD\00_EAST\PLANSHEETS\TRACK\E4-TRK-TYP.dwg By: V-RasulL

NOTES:
1. SEE RETAINING WALL PLANS FOR DETAILS.
2. SEE SYSTEMS PLANS FOR DUCTBANK AND CABLE TROUGH DETAILS.
3. SEE URBAN DESIGN PLANS FOR FENCE LOCATIONS AND DETAILS.

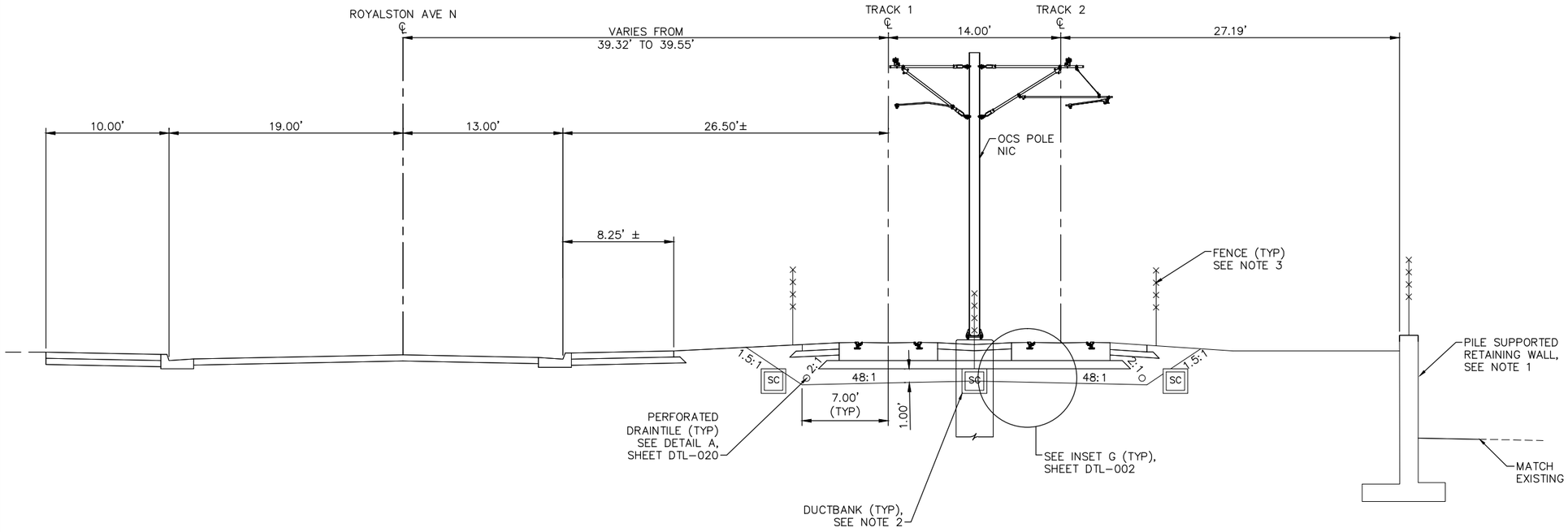

TYPICAL SECTION
STA. 2947+38.50 TO STA. 2948+00.00

0 2.5 5 10
SCALE IN FEET

NO.	DATE	BY	CHECK	DESIGN	REVISION / SUBMITTAL

AECOM

90% SUBMISSION - 01/22/16

METROPOLITAN COUNCIL

SOUTHWEST
Green Line LRT Extension

CIVIL - VOLUME 3B
TRACK
TYPICAL SECTIONS

DISCIPLINE: TRACK

SHEET NAME: E4-TRK-TYP-046

SHEET 217 OF 420

Jan, 15 2016 10:50 am V:\3400_ADC\CAD\00_EAST\PLANSHEETS\TRACK\E4-TRK-TYP.dwg By: V-RasulL

NOTES:
1. TRACK CENTERS VARY IN CURVE E4–211. SEE TRACK PLANS.
2. SEE RETAINING WALL PLANS FOR DETAILS.
3. SEE SYSTEMS PLANS FOR DUCTBANK AND CABLE TROUGH DETAILS.
4. SELECT GRANULAR ABOVE LOAD TRANSFER PLATFORM (LTP). SEE RETAINING WALL PLANS FOR DETAILS.
5. SEE URBAN DESIGN PLANS FOR FENCE LOCATIONS AND DETAILS.

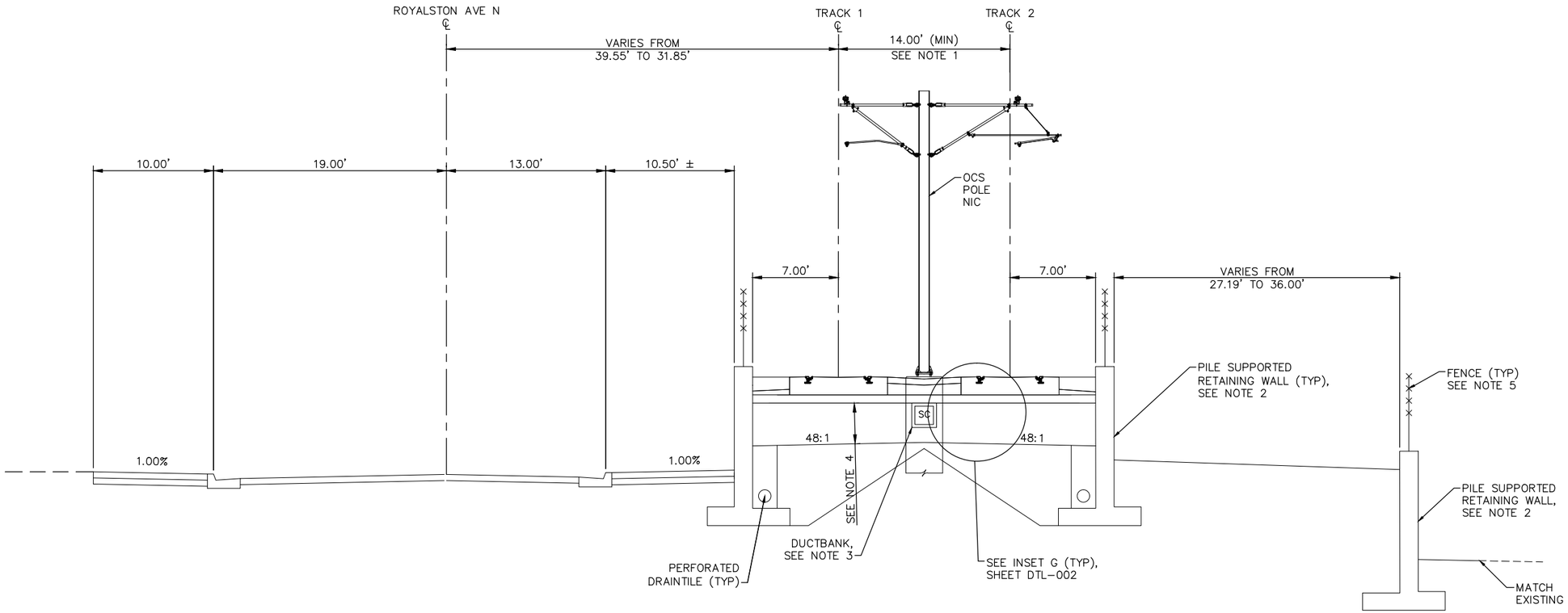

TYPICAL SECTION
STA. 2948+00.00 TO STA. 2950+62.93

0 2.5 5 10
SCALE IN FEET

NO.	DATE	BY	CHECK	DESIGN	REVISION / SUBMITTAL

AECOM

90% SUBMISSION - 01/22/16

METROPOLITAN COUNCIL

SOUTHWEST
Green Line LRT Extension

CIVIL - VOLUME 3B
TRACK
TYPICAL SECTIONS

DISCIPLINE: TRACK

SHEET NAME: E4-TRK-TYP-047

SHEET 218 OF 420

Jan. 15 2016 10:50 am V:\3400_ADC\CAD\00_EAST\PLANSHEETS\TRACK\E4-TRK-TYP.dwg By: V-RasulL

NOTES:
1. MnDOT BRIDGE 27C18. SEE STRUCTURAL PLANS.
2. SEE TRACK DETAILS FOR PLINTH LAYOUT.
3. SEE SYSTEMS PLANS FOR DUCTBANK AND CABLE TROUGH DETAILS.
4. GUARD RAIL LIMITS SEE TRACK CHART.
5. SEE RETAINING WALL PLANS FOR DETAILS.
6. WALL ENDS AT STA 2950+69.97.

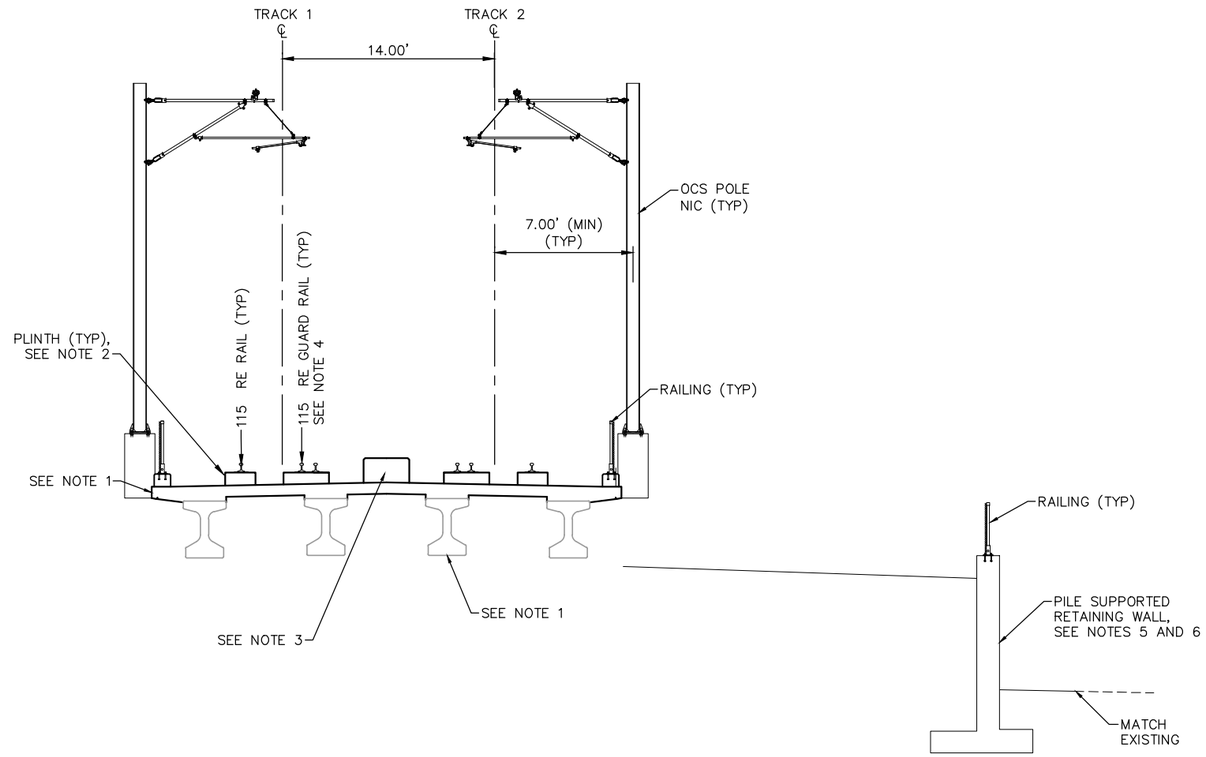

TYPICAL SECTION
STA. 2950+62.93 TO STA. 2951+50.00

0 2.5 5 10
SCALE IN FEET

NO.	DATE	BY	CHECK	DESIGN	REVISION / SUBMITTAL

AECOM

90% SUBMISSION - 01/22/16

METROPOLITAN COUNCIL

SOUTHWEST Green Line LRT Extension

CIVIL - VOLUME 3B
TRACK
TYPICAL SECTIONS

DISCIPLINE: TRACK

SHEET NAME: E4-TRK-TYP-048

SHEET 219 OF 420

Jan, 15 2016 10:51 am V:\3400_ADC\CAD\00_EAST\PLANSHEETS\TRACK\E4-TRK-TYP.dwg By: V-RasulL

NOTES:
1. TRACK CENTERS WIDEN FROM 14.00' TO 16.00' BETWEEN STA 2952+01.07 TO STA 2957+39.26.
2. MnDOT BRIDGE 27C18. SEE STRUCTURAL PLANS.
3. SEE TRACK DETAIL FOR PLINTH LAYOUT.
4. SEE SYSTEMS PLANS FOR DUCTBANK AND CABLE TROUGH DETAILS.
5. GUARD RAIL LIMITS SEE TRACK CHART.

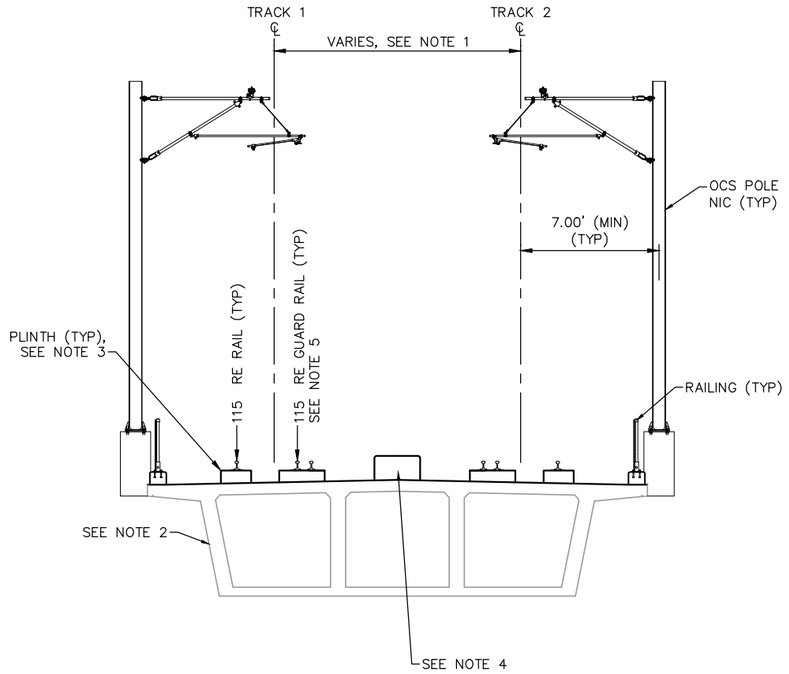

TYPICAL SECTION
STA. 2951+50.00 TO STA. 2957+81.58

0 2.5 5 10
SCALE IN FEET

NO.	DATE	BY	CHECK	DESIGN	REVISION / SUBMITTAL

AECOM

90% SUBMISSION - 01/22/16

METROPOLITAN COUNCIL

SOUTHWEST Green Line LRT Extension

CIVIL - VOLUME 3B
TRACK
TYPICAL SECTIONS

SHEET 220 OF 420

DISCIPLINE: TRACK

SHEET NAME: E4-TRK-TYP-049

Jan. 15 2016 10:51 am V:\3400_ADC\CAD\00_EAST\PLANSHEETS\TRACK\E4-TRK-TYP.dwg By: V-RasulL

NOTES:
1. MnDOT BRIDGE 27C18. SEE STRUCTURES PLANS.
2. SEE SYSTEMS PLANS FOR DUCTBANK AND CABLE TROUGH DETAILS.
3. SEE TRACK DETAILS FOR PLINTH LAYOUT.
4. GUARD RAIL LIMITS SEE TRACK CHART.
5. SEE URBAN DESIGN PLANS FOR FENCE LOCATION AND DETAILS.

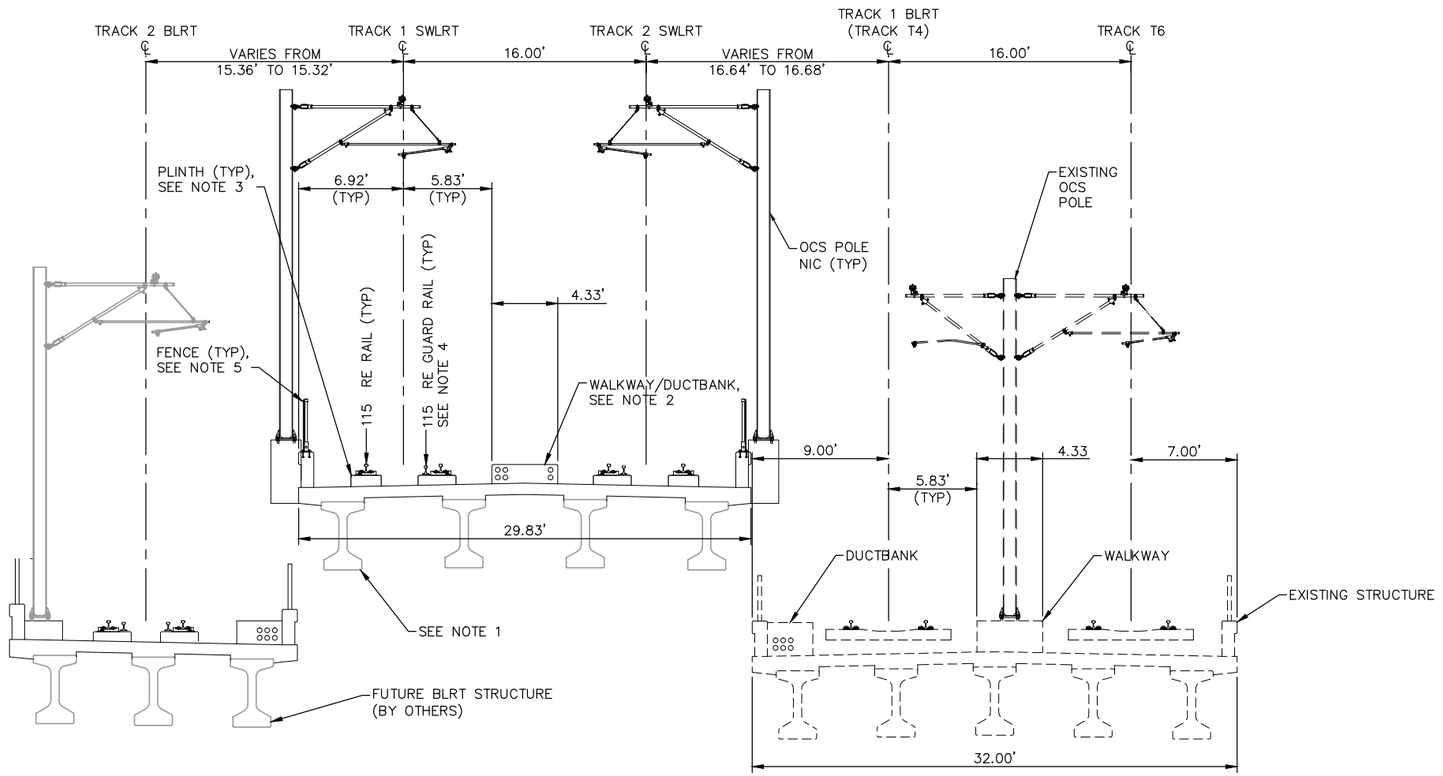

TYPICAL SECTION
STA. 2957+81.58 TO 2960+00.00

0 2.5 5 10
SCALE IN FEET

NO.	DATE	BY	CHECK	DESIGN	REVISION / SUBMITTAL

AECOM

90% SUBMISSION - 01/22/16

METROPOLITAN COUNCIL

SOUTHWEST Green Line LRT Extension

CIVIL - VOLUME 3B
TRACK
TYPICAL SECTIONS

DISCIPLINE: TRACK

SHEET NAME: E4-TRK-TYP-050

SHEET 221 OF 420

Jan, 15 2016 10:51 am V:\3400_ADC\CAD\00_EAST\PLANSHEETS\TRACK\E4-TRK-TYP.dwg By: V-RasulL

NOTES:
1. TRACK CENTERS NARROW FROM 16.00' TO 15.36' BETWEEN STA 2960+59.33 TO STA 2961+66.43.
2. MnDOT BRIDGE 27C18. SEE STRUCTURES PLANS.
3. SEE SYSTEMS PLANS FOR DUCTBANK AND CABLE TROUGH DETAILS.
4. SEE TRACK DETAILS FOR PLINTH LAYOUT.
5. GUARD RAIL LIMITS SEE TRACK CHART.
6. STA 2961+66.43 TO STA 2962+34.33 LOCATES ON EXISTING METRO TRANSIT STRUCTURE.
7. SEE URBAN DESIGN PLANS FOR FENCE LOCATION AND DETAILS.

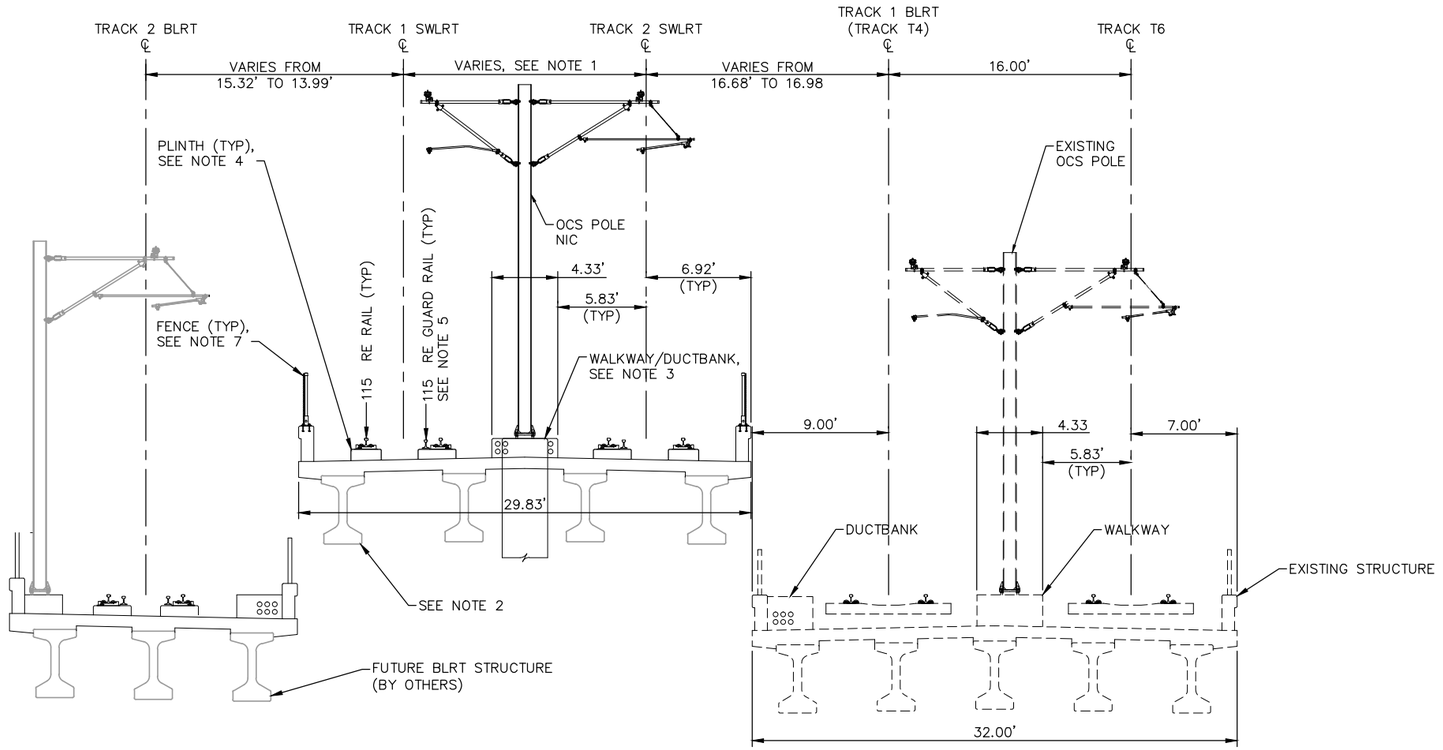

TYPICAL SECTION
STA 2960+00.00 TO STA 2961+66.43
STA 2961+66.43 TO STA 2962+34.33 (SEE NOTE 6)

SCALE 0 2.5 5 10 IN FEET

NO.	DATE	BY	CHECK	DESIGN	REVISION / SUBMITTAL

AECOM

90% SUBMISSION - 01/22/16

METROPOLITAN COUNCIL

SOUTHWEST Green Line LRT Extension

CIVIL - VOLUME 3B
TRACK
TYPICAL SECTIONS

DISCIPLINE: TRACK

SHEET NAME: E4-TRK-TYP-051

SHEET 222 OF 420

Jan, 15 2016 10:51 am v:\3400_ADC\CAD\00_EAST\PLANSHEETS\TRACK\E4-TRK-TYP.dwg By: V-RasulL

NOTES:
1. ROYALSTON AVE N BRIDGE LOCATED BETWEEN STA 117+13.95 AND STA 117+84.54.
2. FOR DITCH INVERT AND DETAILS, SEE DRAINAGE PLANS.

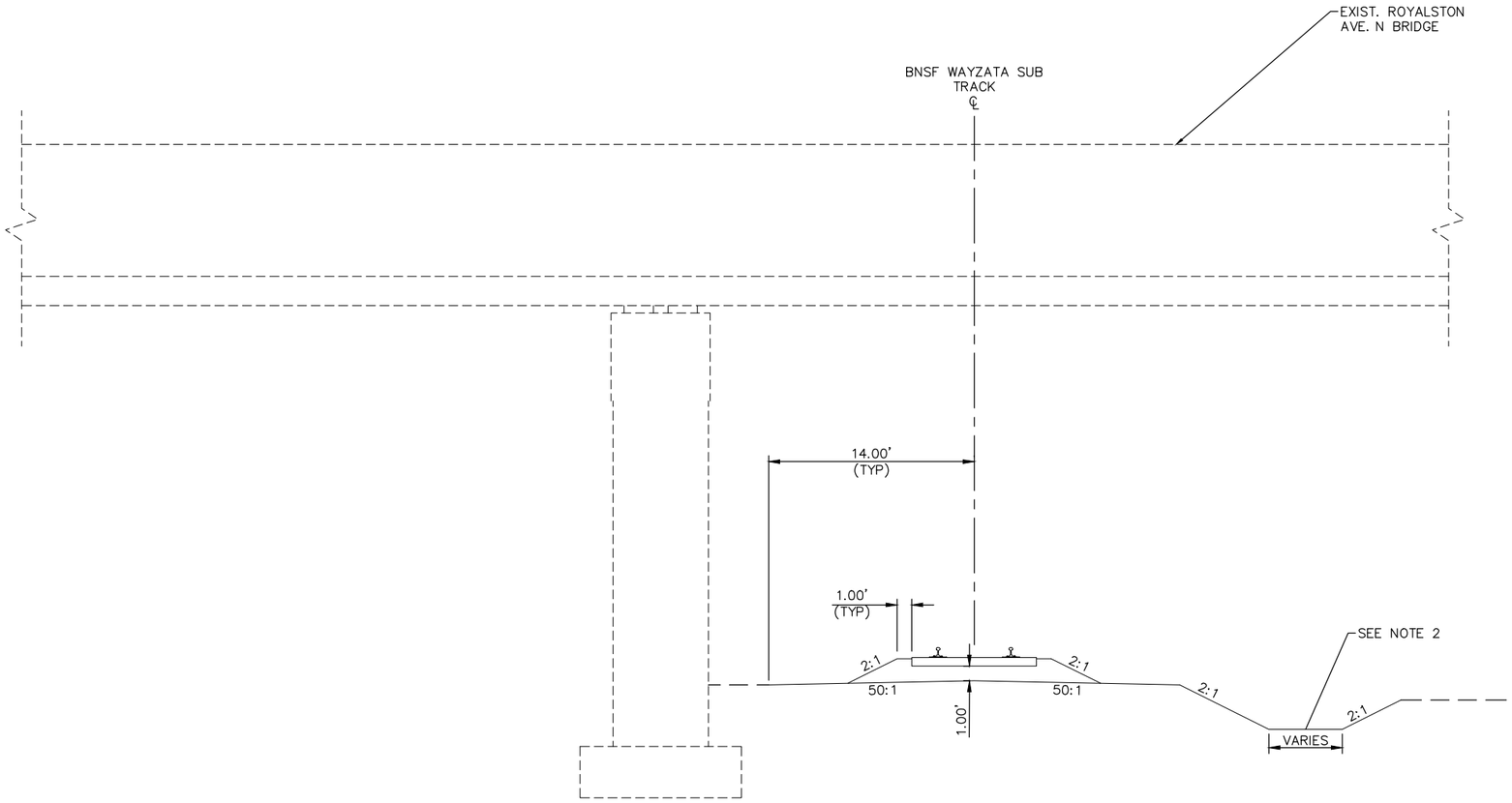

FREIGHT SECTION
STA. 117+04.58 TO STA. 118+00.00 (SEE NOTE 1)

0 2.5 5 10
SCALE IN FEET

NO.	DATE	BY	CHECK	DESIGN	REVISION / SUBMITTAL

AECOM

90% SUBMISSION - 01/22/16

METROPOLITAN COUNCIL

SOUTHWEST Green Line LRT Extension

CIVIL - VOLUME 3B
TRACK
TYPICAL SECTIONS

DISCIPLINE: TRACK

SHEET NAME: E4-TRK-TYP-052

SHEET 223 OF 420

Jan, 15 2016 10:51 am V:\3400_ADC\CAD\00_EAST\PLANSHEETS\TRACK\E4-TRK-TYP.dwg By: V-RasulL

NOTES:
1. FOR DITCH INVERT AND DETAILS, SEE DRAINAGE PLANS.

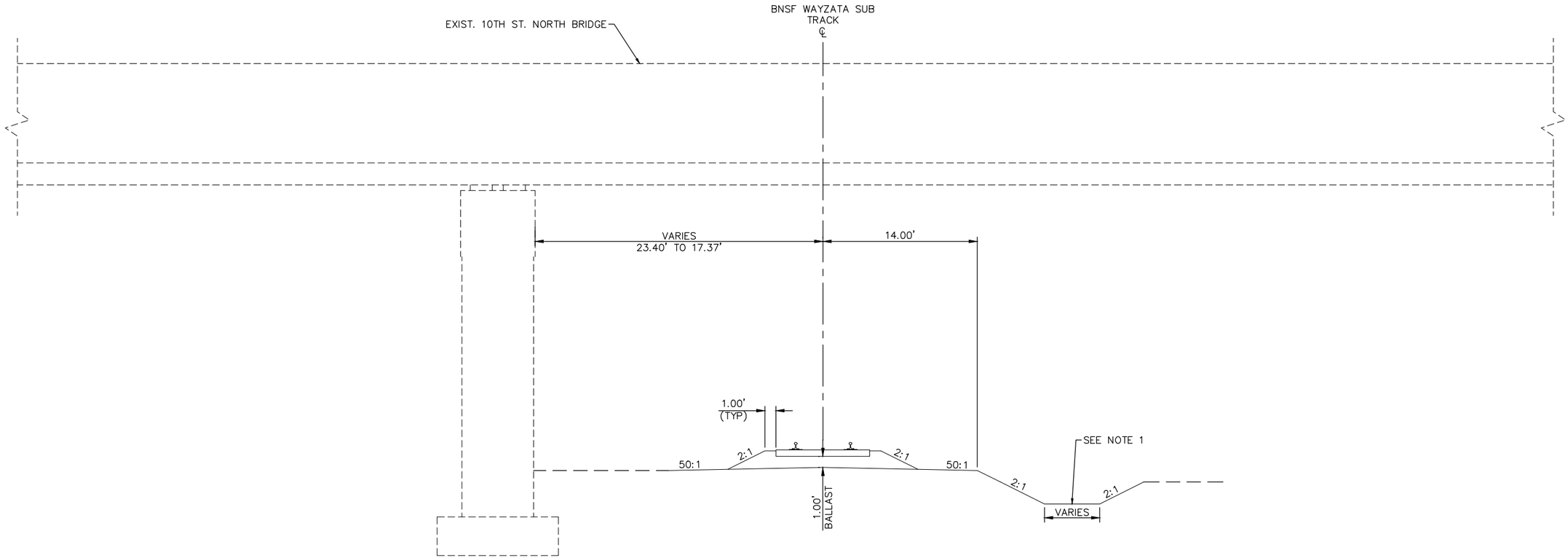

FREIGHT SECTION
STA. 125+18.53 TO STA. 125+81.61

0 2.5 5 10
SCALE IN FEET

NO.	DATE	BY	CHECK	DESIGN	REVISION / SUBMITTAL

AECOM

90% SUBMISSION - 01/22/16

METROPOLITAN COUNCIL

SOUTHWEST Green Line LRT Extension

CIVIL - VOLUME 3B
TRACK
TYPICAL SECTIONS

DISCIPLINE: TRACK

SHEET NAME: E4-TRK-TYP-053

SHEET 224 OF 420

Jan, 15 2016 10:52 am V:\3400_ADC\CAD\00_EAST\PLANSHEETS\TRACK\E4-TRK-TYP.dwg By: V-RasulL

NOTES:
1. FOR DITCH INVERT AND DETAILS, SEE DRAINAGE PLANS.

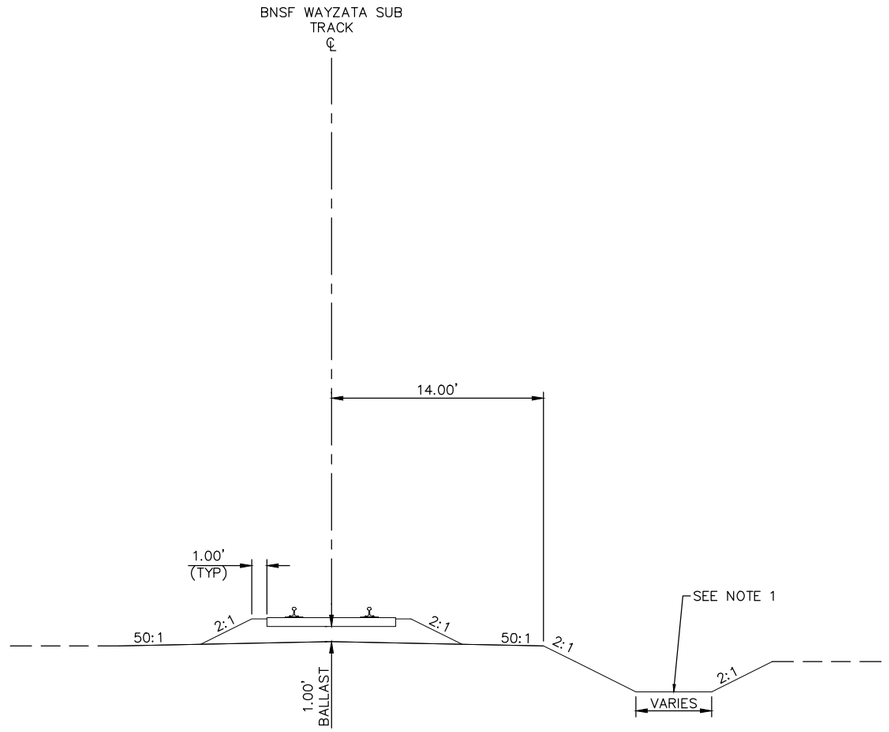

FREIGHT SECTION
STA 118+00 TO STA 125+18.53
STA 125+81.61 TO STA 126+99.67
STA 126+99.67 TO STA 128+00.00

0 2.5 5 10
SCALE IN FEET

NO.	DATE	BY	CHECK	DESIGN	REVISION / SUBMITTAL

AECOM

90% SUBMISSION - 01/22/16

METROPOLITAN COUNCIL

SOUTHWEST Green Line LRT Extension

CIVIL - VOLUME 3B
TRACK
TYPICAL SECTIONS

DISCIPLINE: TRACK

SHEET NAME: E4-TRK-TYP-054

SHEET 225 OF 420

Jan, 15 2016 10:52 am V:\3400_ADC\CAD\00_EAST\PLANSHEETS\TRACK\E4-TRK-TYP.dwg By: V-RasulL

NOTES:
1. FOR DITCH INVERT AND DETAILS, SEE DRAINAGE PLANS.

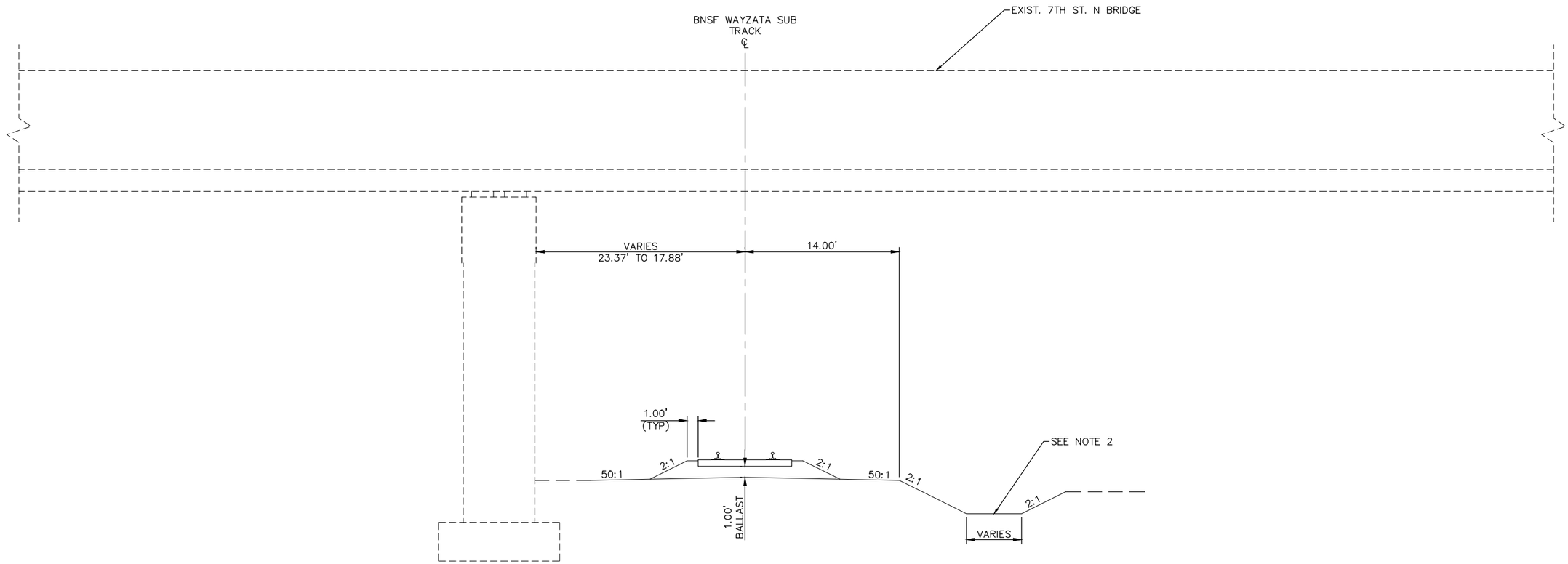

FREIGHT SECTION
STA. 126+48.52 TO STA. 126+99.67

0 2.5 5 10
SCALE IN FEET

NO.	DATE	BY	CHECK	DESIGN	REVISION / SUBMITTAL

AECOM

90% SUBMISSION - 01/22/16

METROPOLITAN COUNCIL

SOUTHWEST
Green Line LRT Extension

CIVIL - VOLUME 3B
TRACK
TYPICAL SECTIONS

DISCIPLINE: TRACK

SHEET NAME: E4-TRK-TYP-055

SHEET 226 OF 420

Jan, 15 2016 10:52 am v:\3400_ADC\CAD\00_EAST\PLANSHEETS\TRACK\E4-TRK-TYP.dwg By: V-RasulL

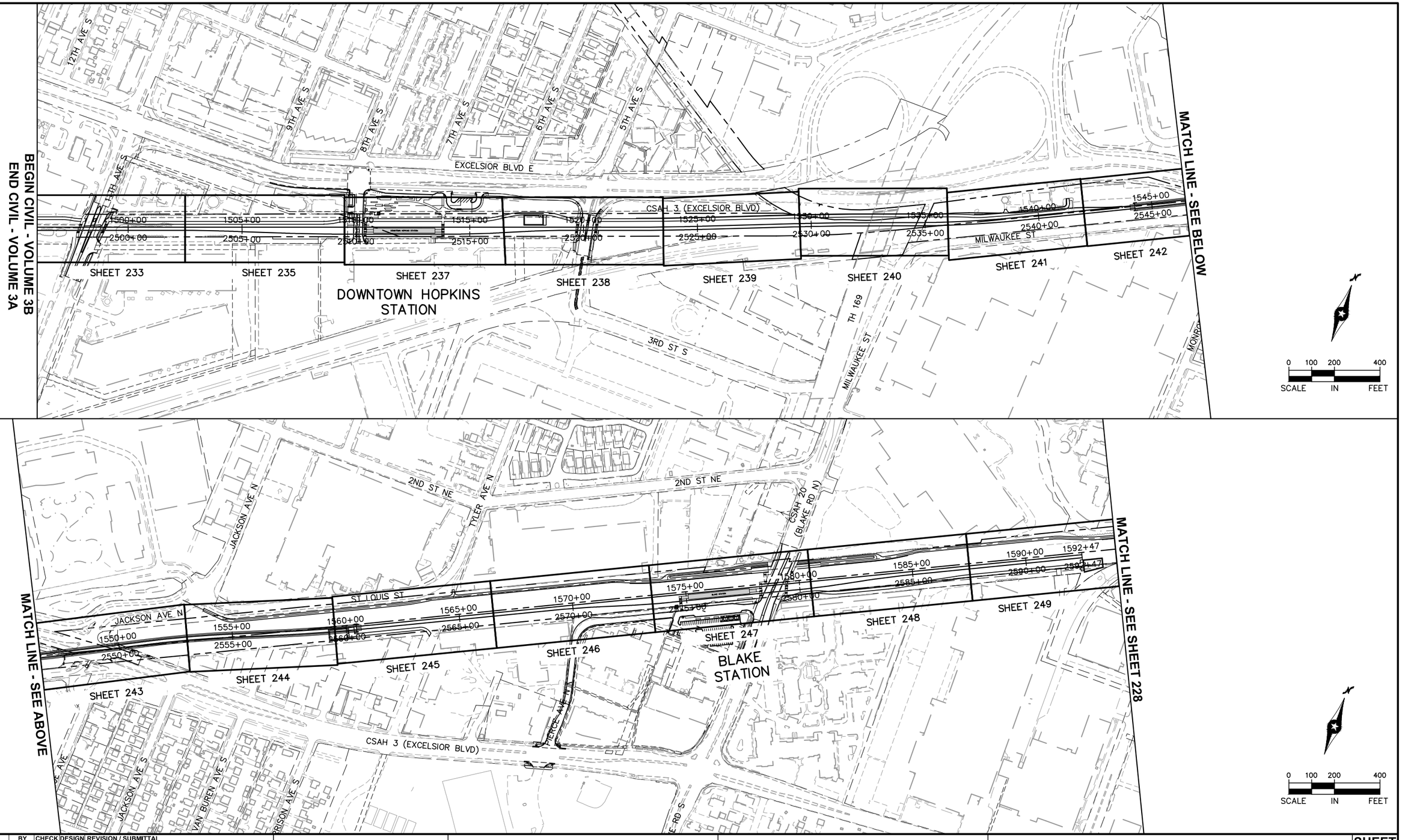

NO.	DATE	BY	CHECK	DESIGN	REVISION / SUBMITTAL

AECOM

90% SUBMISSION - 01/22/16

METROPOLITAN COUNCIL

SOUTHWEST Green Line LRT Extension

CIVIL - VOLUME 3B
TRACK
PLAN SHEET LAYOUT
SHEET 1

DISCIPLINE: TRACK

SHEET NAME: E1-TRK-LAY-001

SHEET 227 OF 420

Jan, 18 2016 10:45 am V:\3400_ADC\CAD\00_EAST\plansheets\TRACK\E1-TRK-LAY.dwg By: V-RasulL

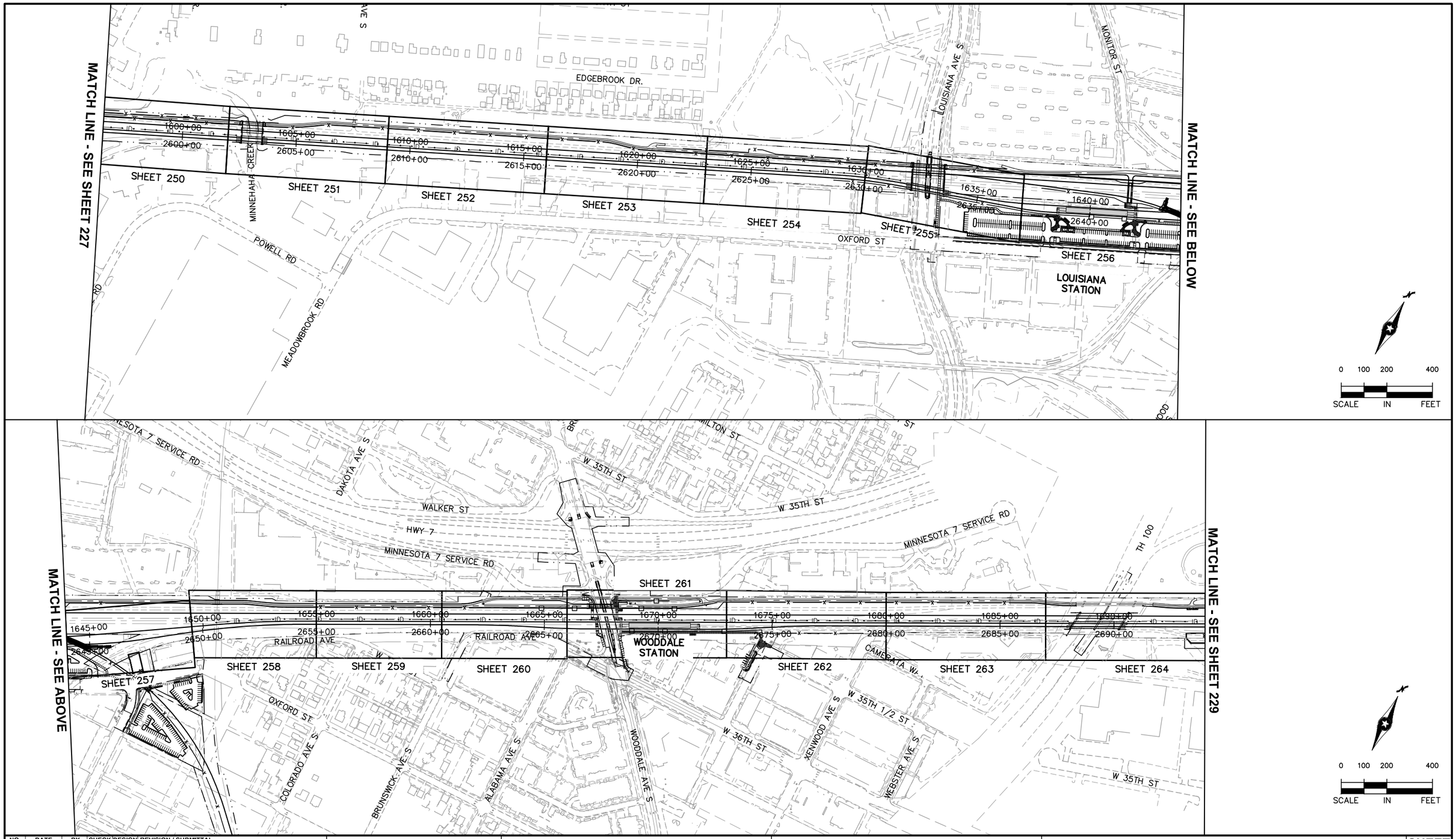

NO.	DATE	BY	CHECK	DESIGN	REVISION / SUBMITTAL

AECOM

90% SUBMISSION - 01/22/16

METROPOLITAN COUNCIL

SOUTHWEST Green Line LRT Extension

CIVIL - VOLUME 3B
TRACK
PLAN SHEET LAYOUT
SHEET 2

DISCIPLINE:	SHEET NAME:
TRACK	E2-TRK-LAY-001

SHEET 228 OF 420

Jan, 18 2016 10:47 am V:\3400_ADC\CAD\00_EAST\plansheets\TRACK\E2-TRK-LAY.dwg By: V-RasulL

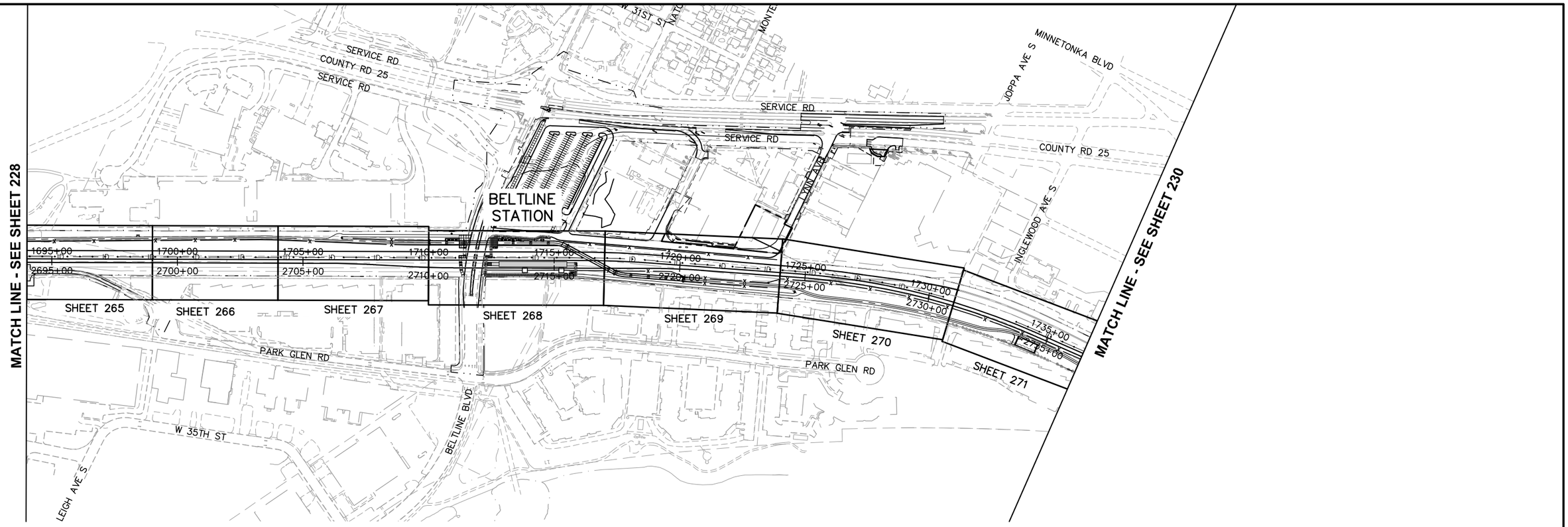

0 100 200 400

SCALE IN FEET

NO.	DATE	BY	CHECK	DESIGN	REVISION / SUBMITTAL

AECOM

90% SUBMISSION - 01/22/16

METROPOLITAN COUNCIL

SOUTHWEST Green Line LRT Extension

CIVIL - VOLUME 3B
TRACK
PLAN SHEET LAYOUT
SHEET 3

DISCIPLINE: TRACK

SHEET NAME: E2-TRK-LAY-002

SHEET 229 OF 420

Jan, 18 2016 10:47 am V:\3400_ADC\CAD\00_EAST\plansheets\TRACK\E2-TRK-LAY.dwg By: V-RasulL



NO.	DATE	BY	CHECK	DESIGN	REVISION / SUBMITTAL

AECOM

90% SUBMISSION - 01/22/16

METROPOLITAN COUNCIL

SOUTHWEST Green Line LRT Extension

CIVIL - VOLUME 3B
TRACK
PLAN SHEET LAYOUT
SHEET 4

DISCIPLINE: TRACK

SHEET NAME: E3-TRK-LAY-001

SHEET 230 OF 420

Jan, 18 2016 10:49 am V:\3400_ADC\CAD\00_EAST\plansheets\TRACK\E3-TRK-LAY.dwg By: V-RasulL

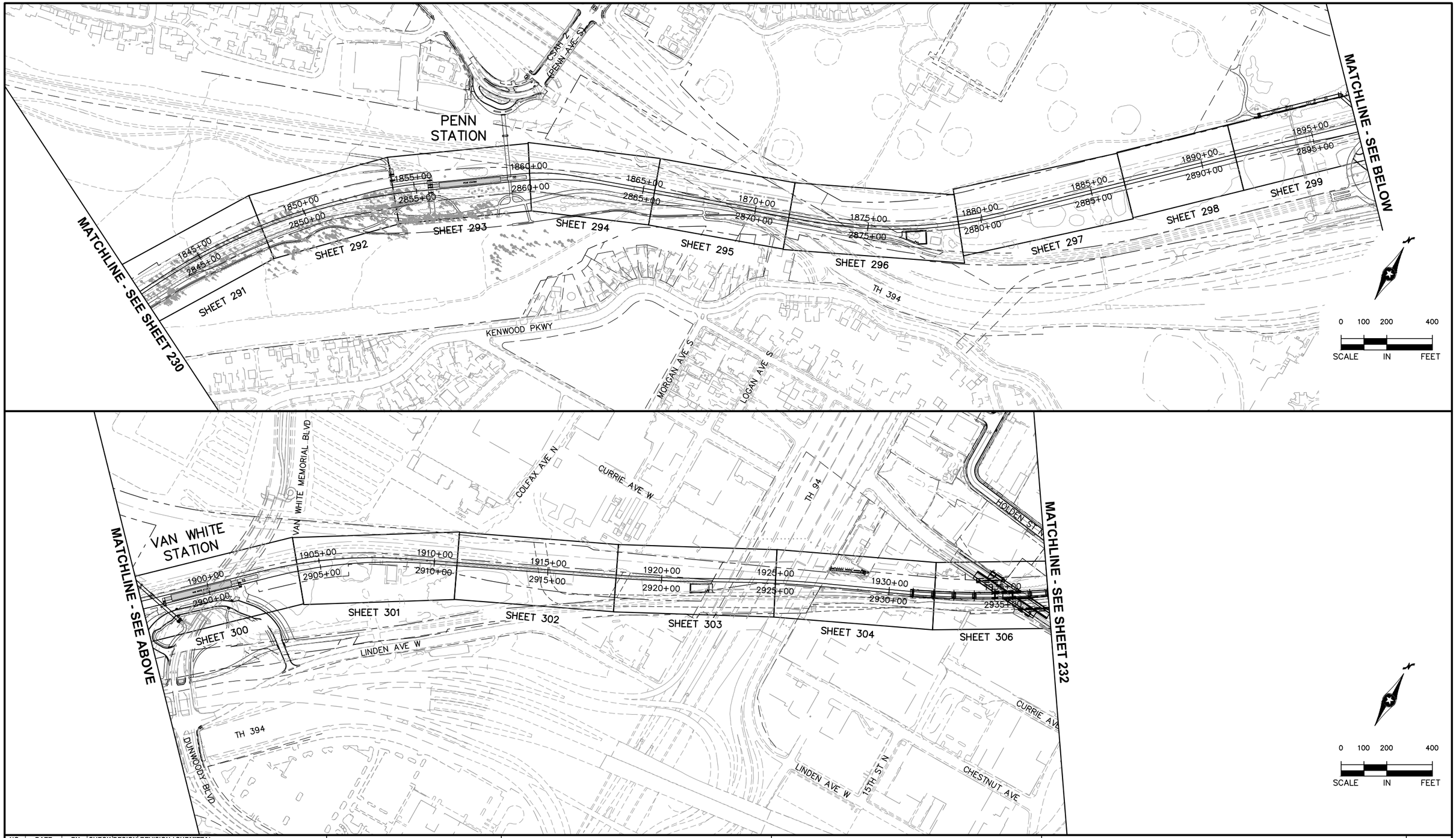

NO.	DATE	BY	CHECK	DESIGN	REVISION / SUBMITTAL

AECOM

90% SUBMISSION - 01/22/16

METROPOLITAN COUNCIL

SOUTHWEST Green Line LRT Extension

CIVIL - VOLUME 3B
TRACK
PLAN SHEET LAYOUT
SHEET 5

DISCIPLINE: TRACK

SHEET NAME: E4-TRK-LAY-001

SHEET 231 OF 420

Jan, 18 2016 10:51 am V:\3400_ADC\CAD\00_EAST\plansheets\TRACK\E4-TRK-LAY.dwg By: V-RasulL



NO.	DATE	BY	CHECK	DESIGN	REVISION / SUBMITTAL

AECOM

90% SUBMISSION - 01/22/16

METROPOLITAN COUNCIL

SOUTHWEST Green Line LRT Extension

CIVIL - VOLUME 3B
TRACK
PLAN SHEET LAYOUT
SHEET 6

DISCIPLINE: TRACK

SHEET NAME: E4-TRK-LAY-002

SHEET 232 OF 420

Jan, 18 2016 10:52 am V:\3400_ADC\CAD\00_EAST\plansheets\TRACK\E4-TRK-LAY.dwg By: V-RasulL

MATCHLINE - STA BACK 2441+49.22 =
STA AHEAD 2496+00.21

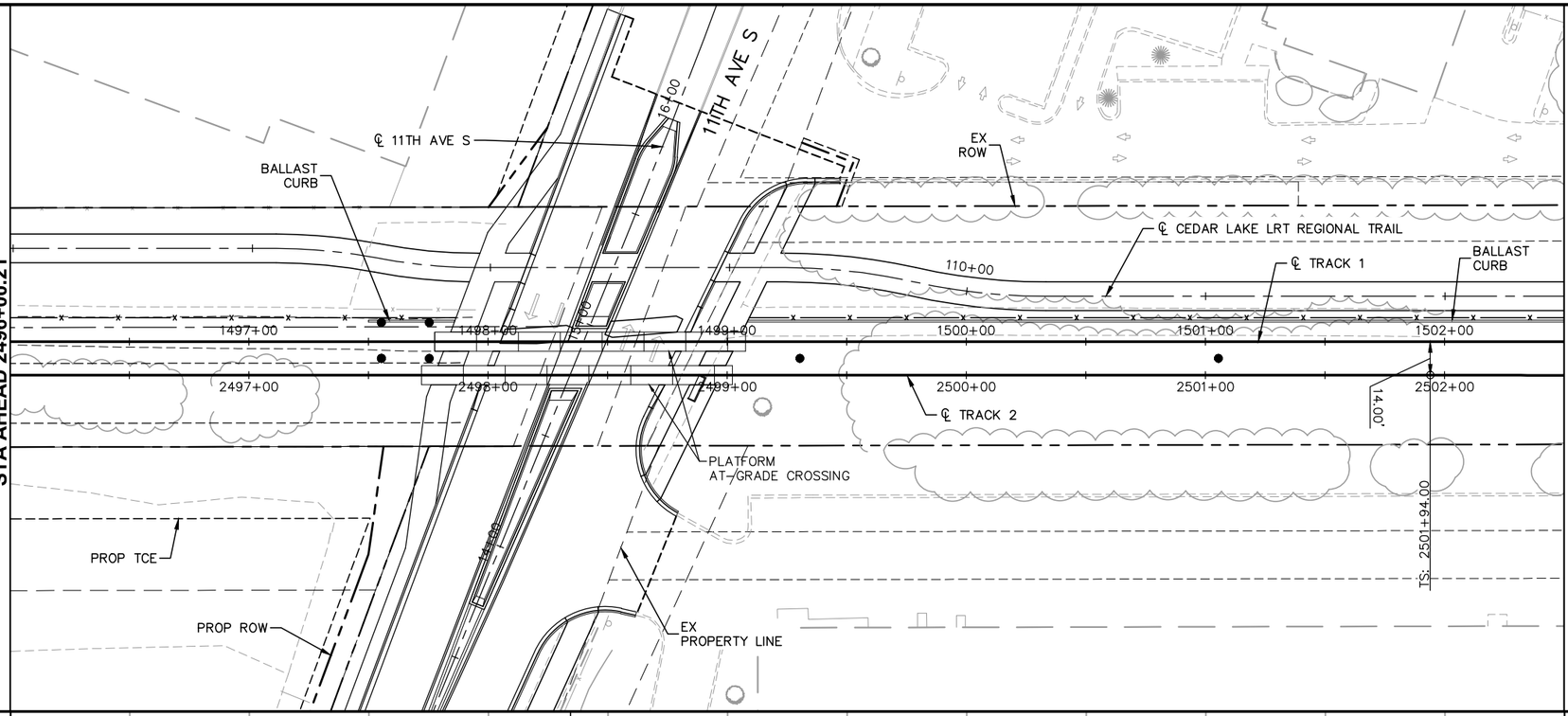

MATCH LINE - STA 2502+50

NOTE:
1. SEE SHEET E1-TRK-PRF-001A FOR TRACK 1 PROFILE.

0 5 10 20
VERTICAL
0 15 30 60
HORIZONTAL
SCALE IN FEET

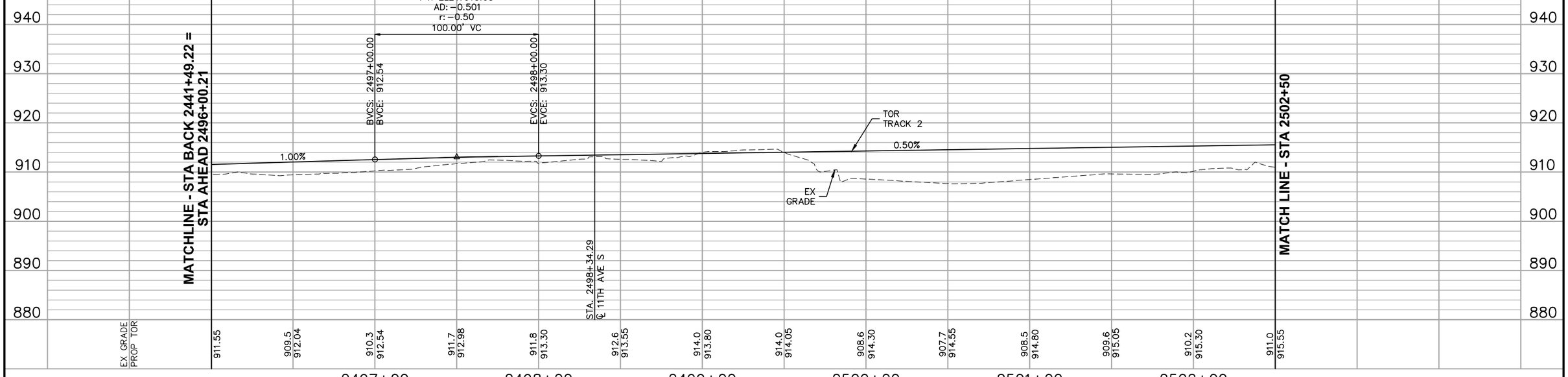

NO.	DATE	BY	CHECK	DESIGN	REVISION / SUBMITTAL

AECOM

90% SUBMISSION - 01/22/16

METROPOLITAN COUNCIL

SOUTHWEST Green Line LRT Extension

CIVIL - VOLUME 3B
TRACK
PLAN AND PROFILE
STA 2496+00.21 TO STA 2502+50

DISCIPLINE: TRACK

SHEET NAME: E1-TRK-PRF-001

SHEET 233 OF 420

Jan, 18 2016 07:17 am V:\3400_ADC\CAD\00_EAST\PLANSHEETS\TRACK\E1-TRK-PRF.dwg By: V-RasulL

SEE SHEET E1-TRK-PRF-001 FOR PLAN VIEW

0 5 10 20
VERTICAL
0 15 30 60
HORIZONTAL
SCALE IN FEET

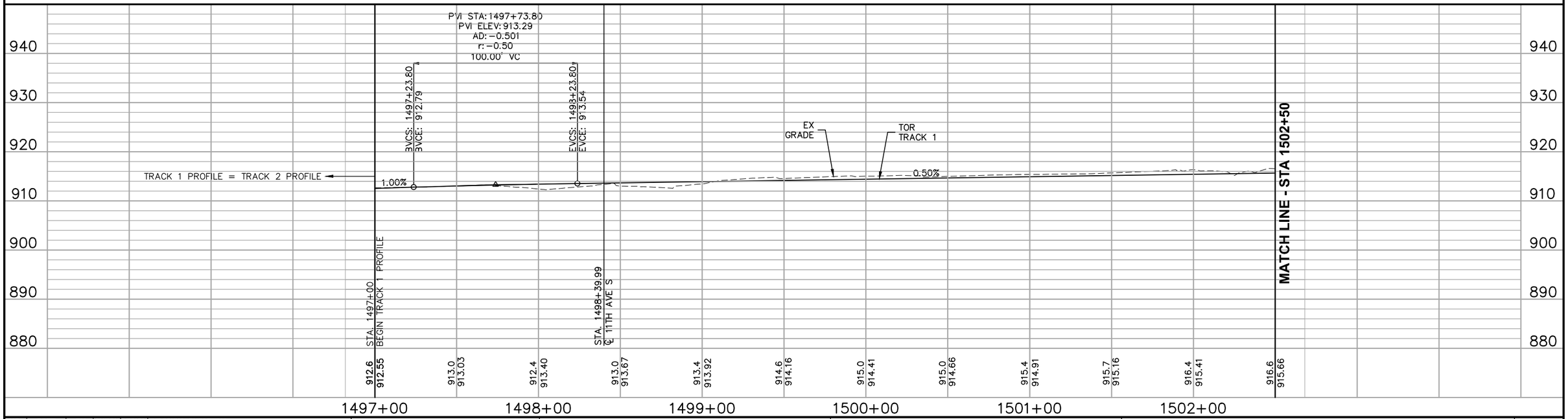

NO.	DATE	BY	CHECK	DESIGN	REVISION / SUBMITTAL

AECOM

90% SUBMISSION - 01/22/16

METROPOLITAN COUNCIL

SOUTHWEST Green Line LRT Extension

CIVIL - VOLUME 3B
TRACK
PLAN AND PROFILE
STA 1497+00 TO STA 1502+50

DISCIPLINE: TRACK

SHEET NAME: E1-TRK-PRF-001A

SHEET 234 OF 420

Jan. 18 2016 07:17 am V:\3400_ADC\CAD\00_EAST\PLANSHEETS\TRACK\E1-TRK-PRF-WB.dwg By: V-RasulL

CURVE NO. E1–200
R = 5,730.00'
Lc = 110.01'
Ls = 90.00'
Ea = 0.75"
Eu = 1.34"
V = 55 MPH

CURVE NO. E1–201
R = 5,730.00'
Lc = 110.01'
Ls = 90.00'
Ea = 0.75"
Eu = 1.34"
V = 55 MPH

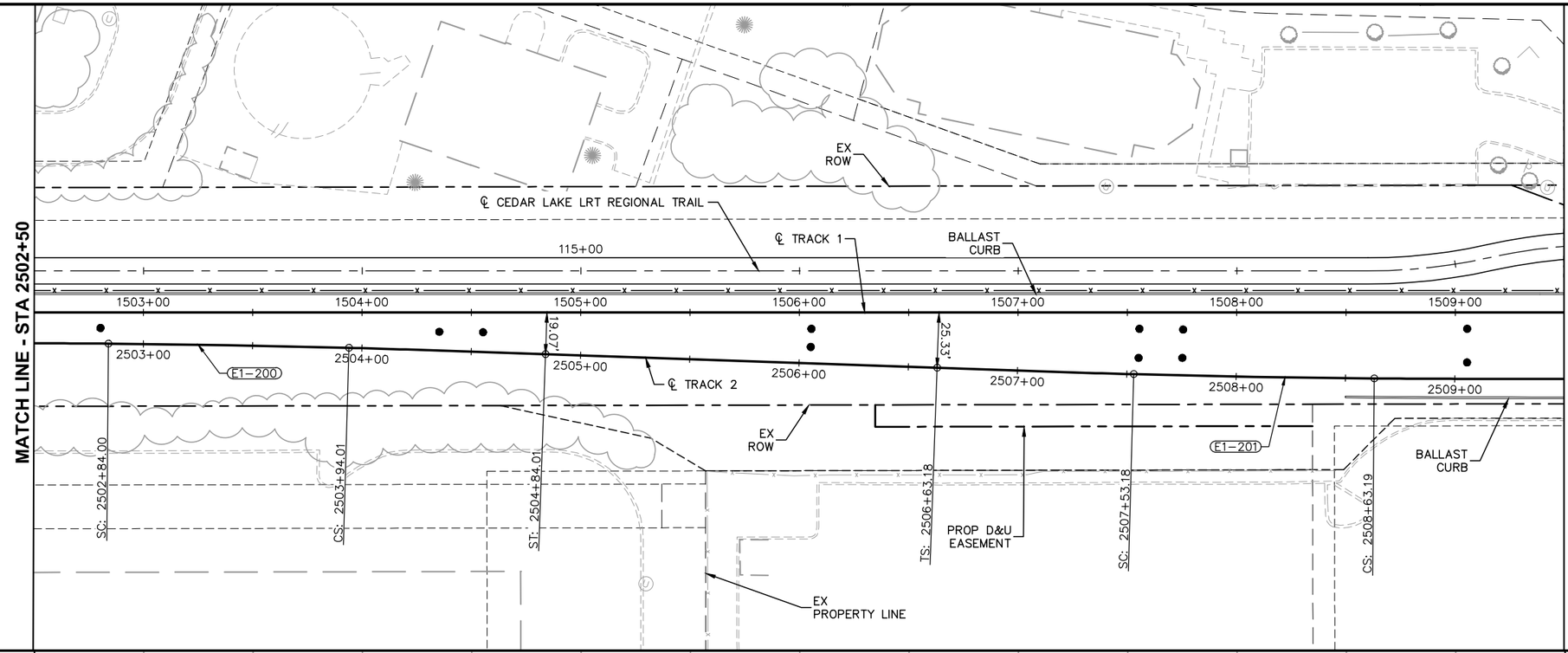

NOTE:
1. SEE SHEET E1–TRK–PRF–002A FOR TRACK 1 PROFILE.

0 5 10 20
VERTICAL
0 15 30 60
HORIZONTAL
SCALE IN FEET

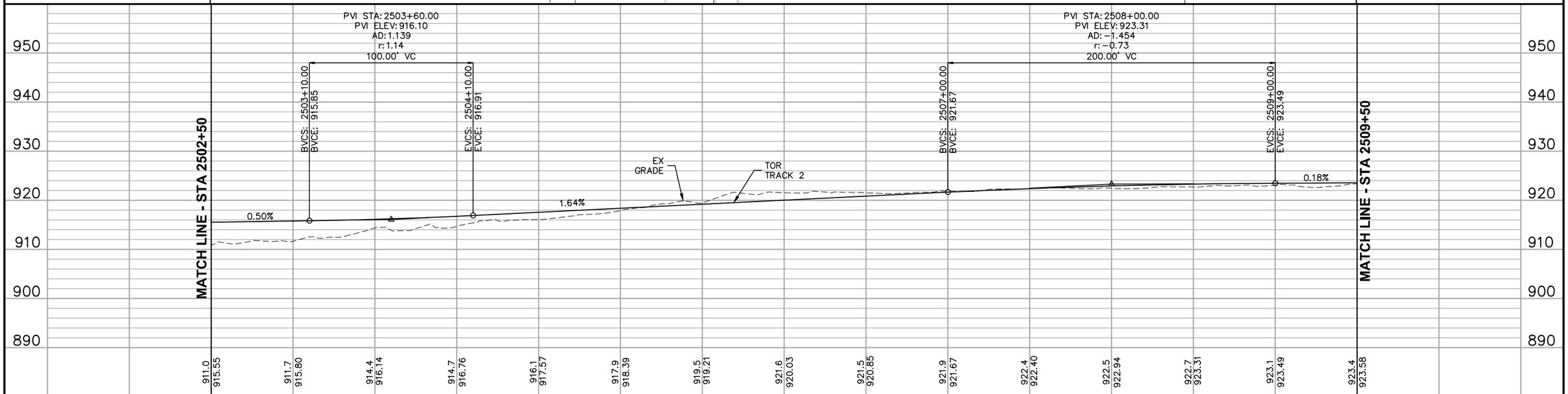

NO.	DATE	BY	CHECK	DESIGN	REVISION / SUBMITTAL

AECOM

90% SUBMISSION - 01/22/16

METROPOLITAN COUNCIL

SOUTHWEST Green Line LRT Extension

CIVIL - VOLUME 3B
TRACK
PLAN AND PROFILE
STA 2502+50 TO STA 2509+50

DISCIPLINE: TRACK

SHEET NAME: E1-TRK-PRF-002

SHEET 235 OF 420

Jan, 18 2016 07:19 am V:\3400_ADC\CAD\00_EAST\PLANSHEETS\TRACK\E1–TRK–PRF.dwg By: V–RasulL

SEE SHEET E1-TRK-PRF-002 FOR PLAN VIEW

0 5 10 20
VERTICAL
0 15 30 60
HORIZONTAL
SCALE IN FEET

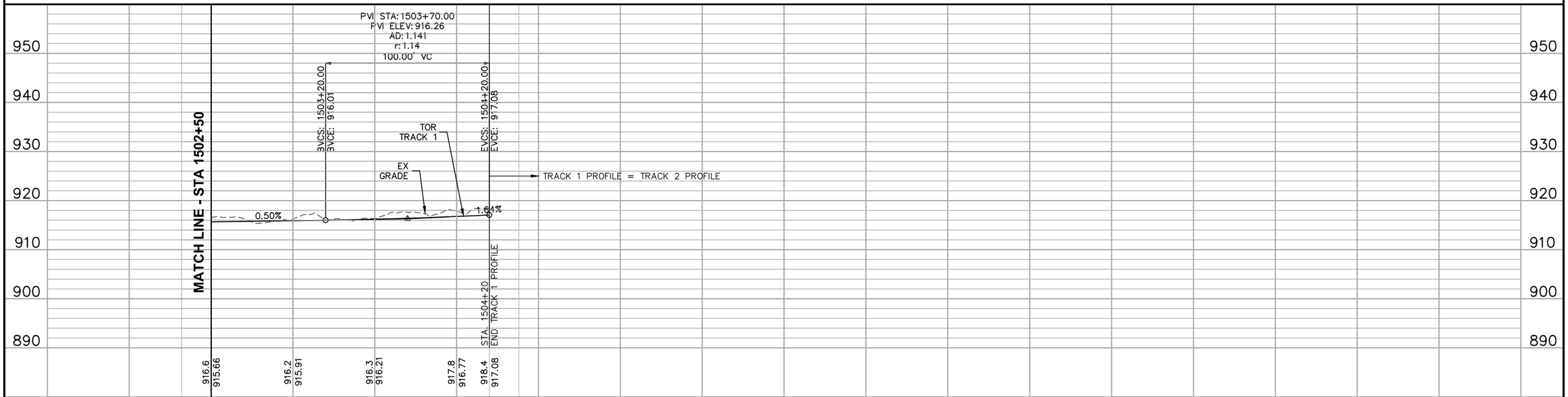

NO.	DATE	BY	CHECK	DESIGN	REVISION / SUBMITTAL

AECOM

90% SUBMISSION - 01/22/16

METROPOLITAN COUNCIL

SOUTHWEST Green Line LRT Extension

CIVIL - VOLUME 3B
TRACK
PLAN AND PROFILE
STA 1502+50 TO STA 1504+20

DISCIPLINE: TRACK

SHEET NAME: E1-TRK-PRF-002A

SHEET 236 OF 420

Jan. 18 2016 07:20 am V:\3400_ADC\CAD\00_EAST\PLANSHEETS\TRACK\E1-TRK-PRF-WB.dwg By: V-RasulL

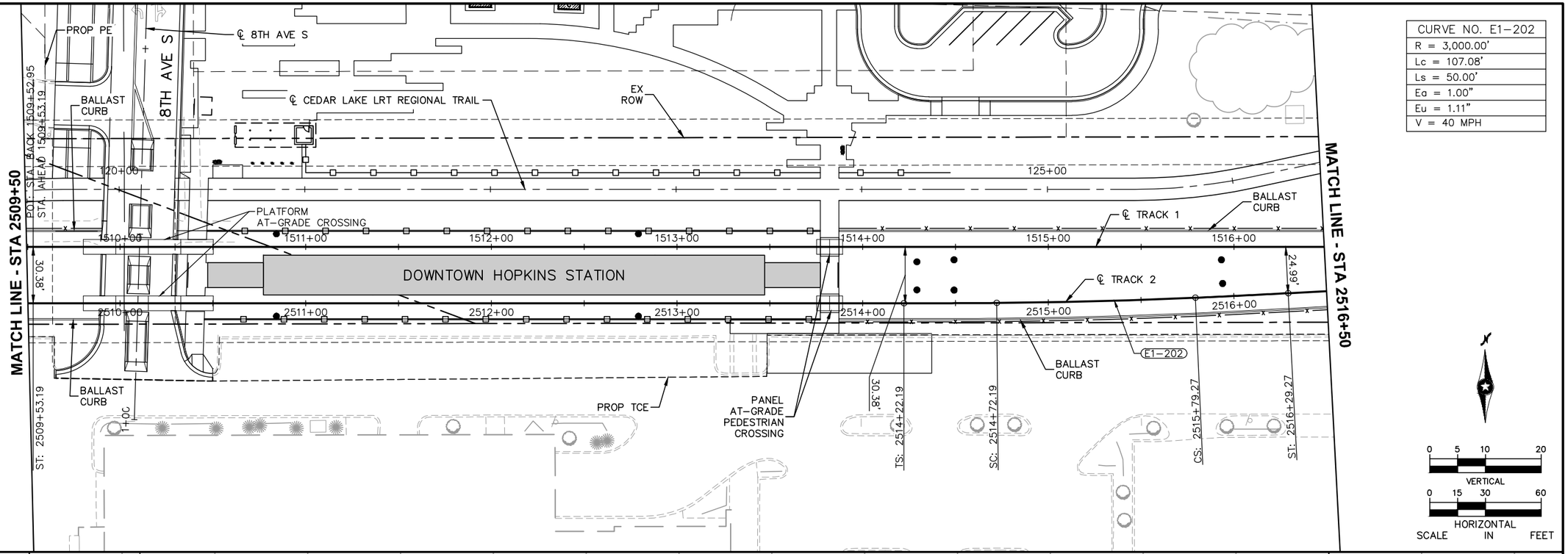

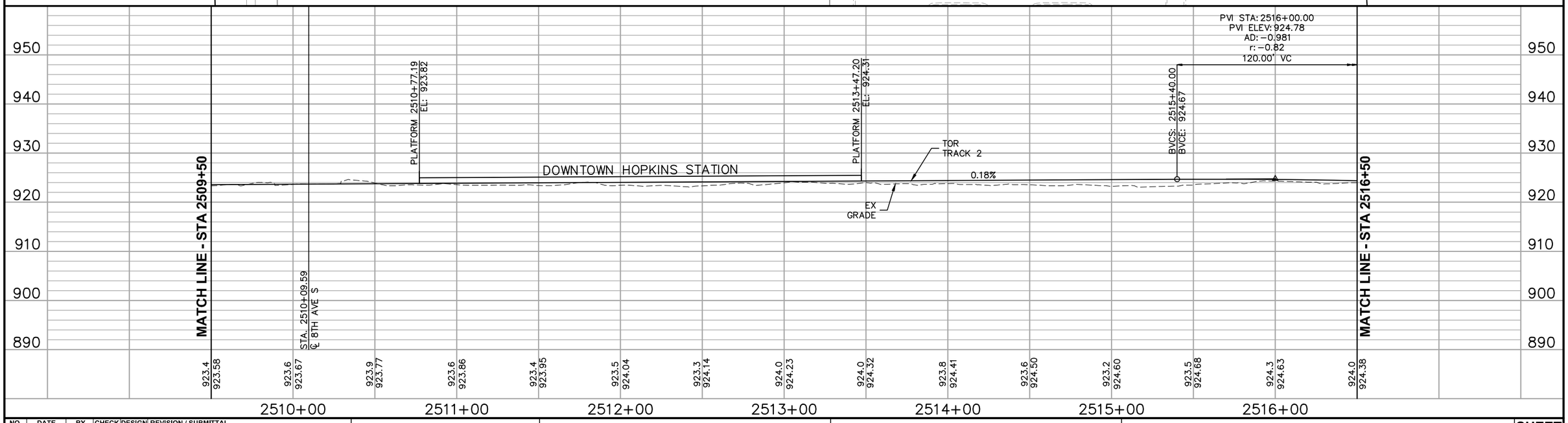

NO.	DATE	BY	CHECK	DESIGN	REVISION / SUBMITTAL

AECOM

90% SUBMISSION - 01/22/16

METROPOLITAN COUNCIL

SOUTHWEST Green Line LRT Extension

CIVIL - VOLUME 3B
TRACK
PLAN AND PROFILE
STA 2509+50 TO STA 2516+50

DISCIPLINE: TRACK

SHEET NAME: E1-TRK-PRF-003

SHEET 237 OF 420

Jan, 18 2016 07:22 am V:\3400_ADC\CAD\00_EAST\PLANSHEETS\TRACK\E1-TRK-PRF.dwg By: V-RasulL

CURVE NO. E1–203
R = 3,000.00'
Lc = 107.08'
Ls = 50.00'
Ea = 1.00"
Eu = 1.11"
V = 40 MPH

CURVE NO. E1–204
R = 9,000.00'
Lc = 130.10'
Ls = 110.00'
Ea = 0.50"
Eu = 0.49"
V = 55 MPH

CURVE NO. E1–104
R = 9,000.00'
Lc = 130.10'
Ls = 110.00'
Ea = 0.50"
Eu = 0.49"
V = 55 MPH

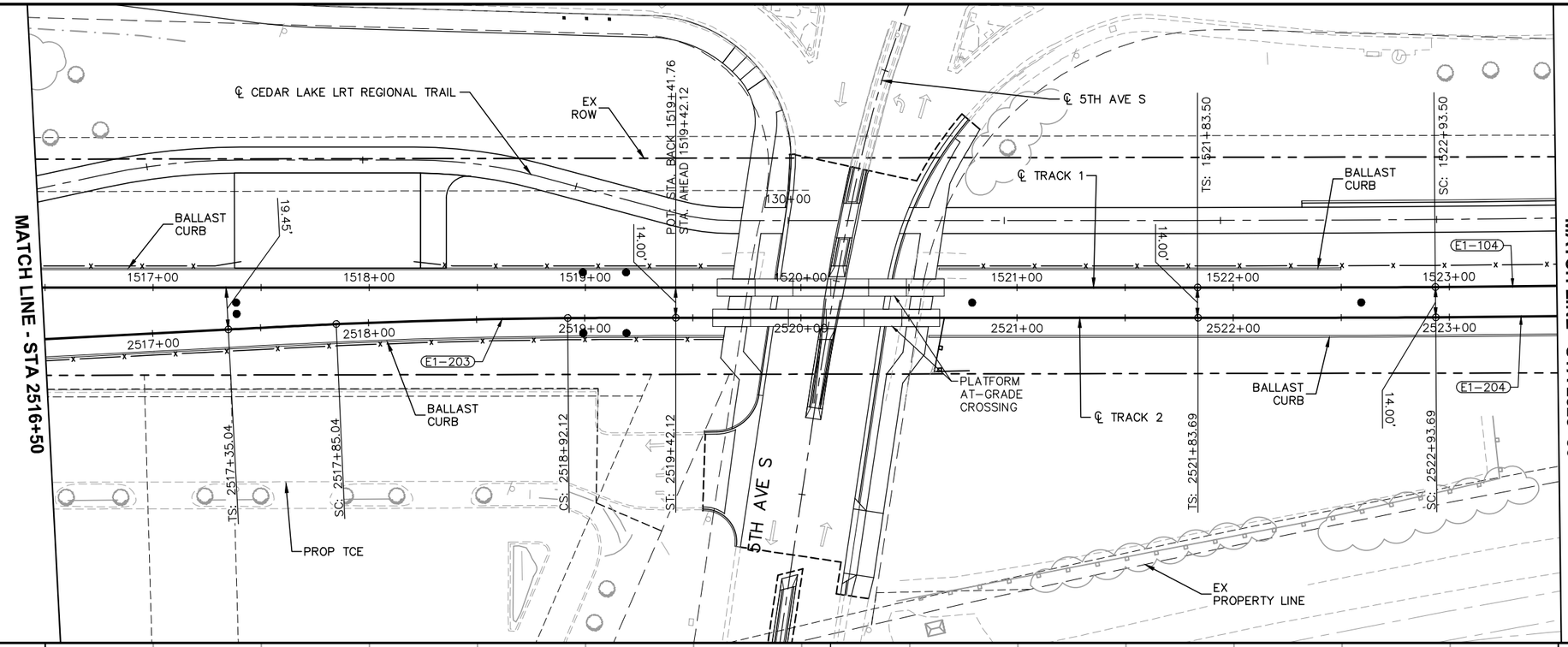

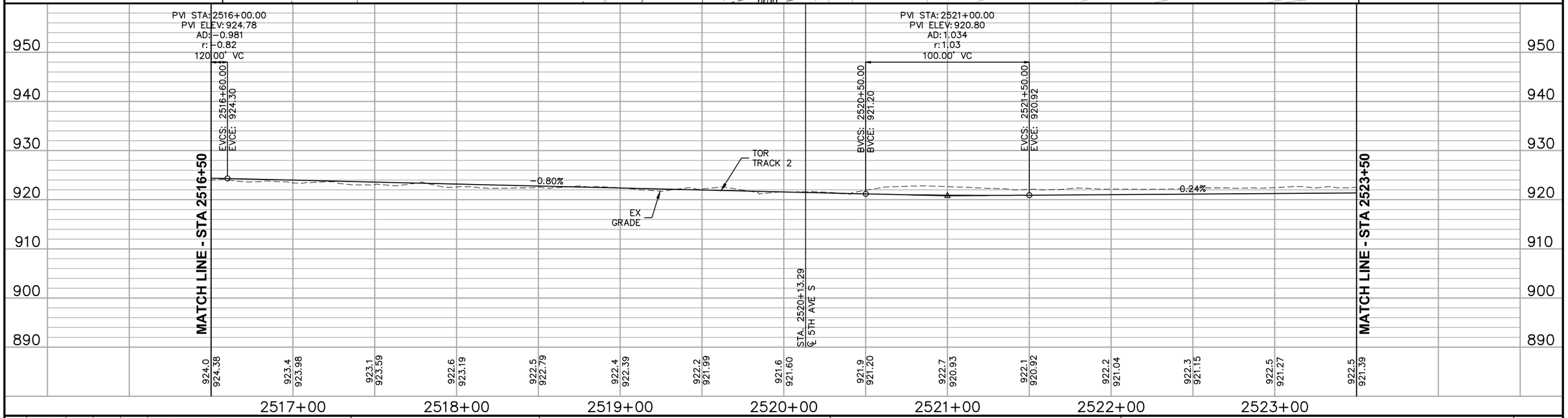

NO.	DATE	BY	CHECK	DESIGN	REVISION / SUBMITTAL

AECOM

90% SUBMISSION - 01/22/16

METROPOLITAN COUNCIL

SOUTHWEST Green Line LRT Extension

CIVIL - VOLUME 3B
TRACK
PLAN AND PROFILE
STA 2516+50 TO STA 2523+50

DISCIPLINE: TRACK

SHEET NAME: E1-TRK-PRF-004

SHEET 238 OF 420

Jan. 18 2016 07:24 am V:\3400_ADC\CAD\00_EAST\PLANSHEETS\TRACK\E1-TRK-PRF.dwg By: V-RasulL

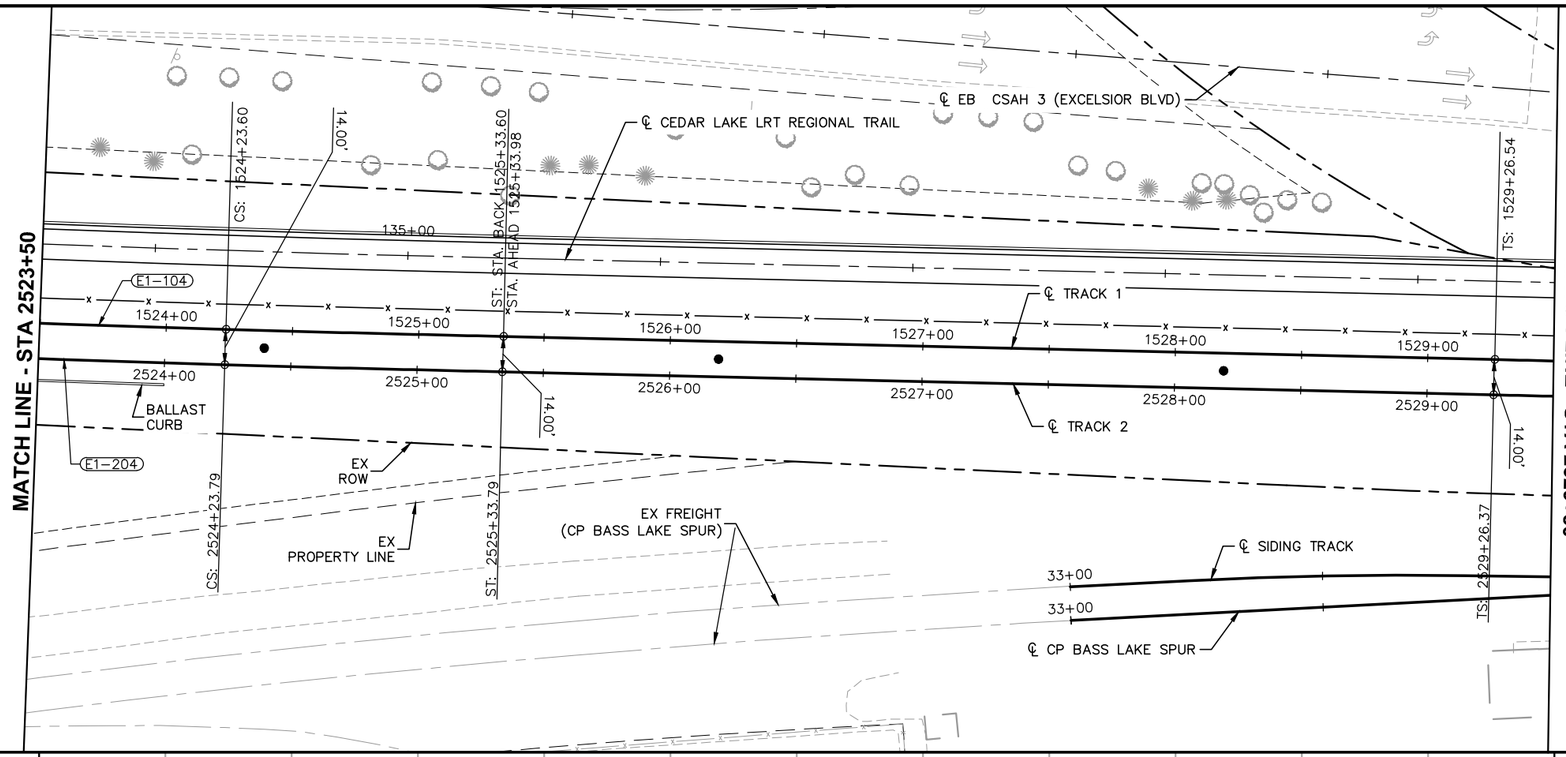

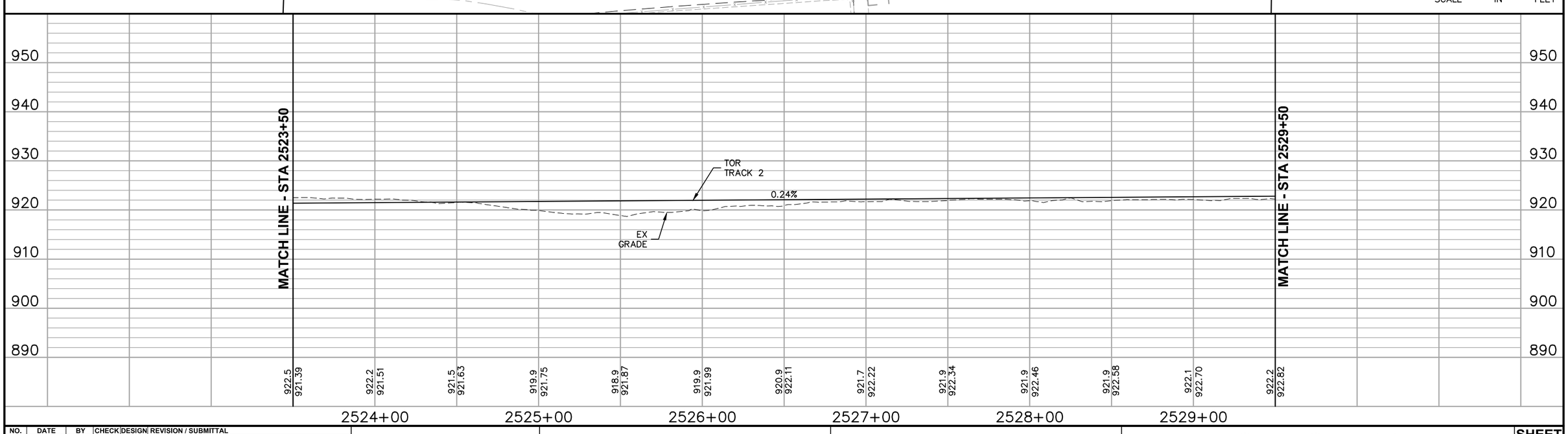

NO.	DATE	BY	CHECK	DESIGN	REVISION / SUBMITTAL

AECOM

90% SUBMISSION - 01/22/16

METROPOLITAN COUNCIL

SOUTHWEST Green Line LRT Extension

CIVIL - VOLUME 3B
TRACK
PLAN AND PROFILE
STA 2523+50 TO STA 2529+50

DISCIPLINE: TRACK

SHEET NAME: E1-TRK-PRF-005

SHEET 239 OF 420

Jan. 18 2016 07:26 am V:\3400_ADC\CAD\00_EAST\PLANSHEETS\TRACK\E1-TRK-PRF.dwg By: V-RasulL

CURVE NO. E1–205
R = 8,200.00'
Lc = 100.29'
Ls = 100.00'
Ea = 0.50"
Eu = 0.96"
V = 55 MPH

CURVE NO. E1–105
R = 8,200.00'
Lc = 100.29'
Ls = 100.00'
Ea = 0.50"
Eu = 0.96"
V = 55 MPH

CURVE NO. E1–206
R = 4,000.00'
Lc = 239.14'
Ls = 160.00'
Ea = 1.00"
Eu = 0.97"
V = 55 MPH

CURVE NO. E1–106
R = 4,000.00'
Lc = 239.14'
Ls = 160.00'
Ea = 1.00"
Eu = 0.97"
V = 55 MPH

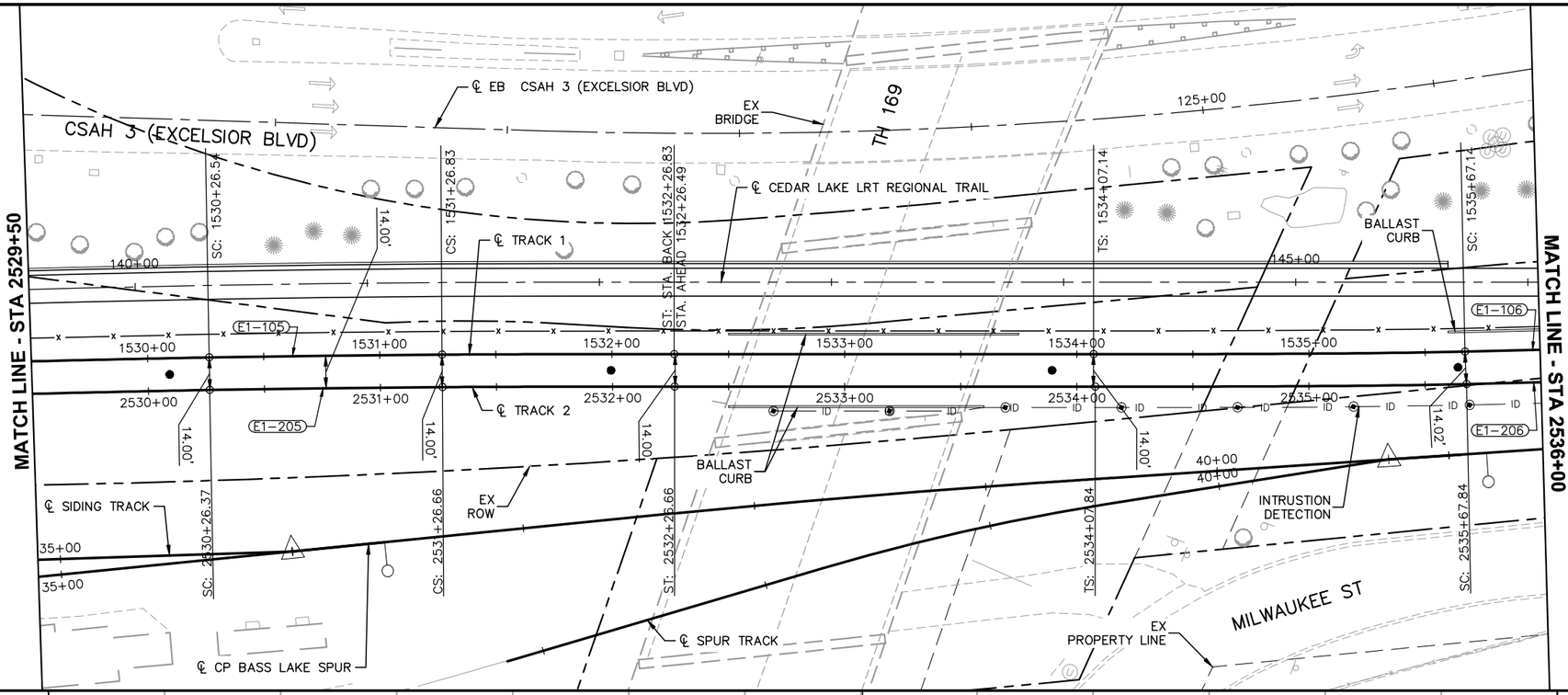

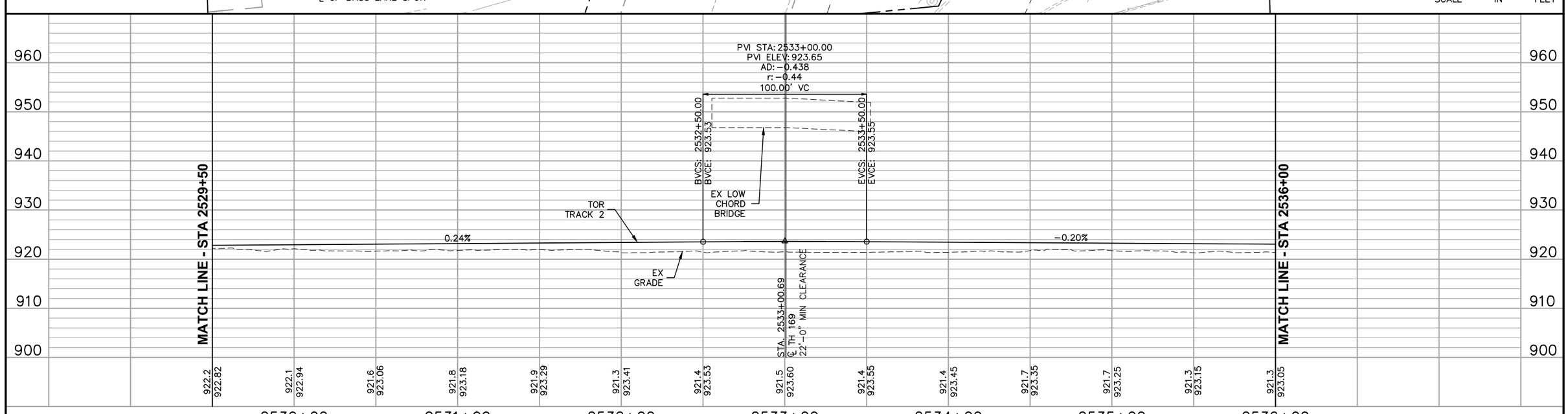

0 5 10 20
VERTICAL
0 15 30 60
HORIZONTAL
SCALE IN FEET

NO.	DATE	BY	CHECK	DESIGN	REVISION / SUBMITTAL

AECOM

90% SUBMISSION - 01/22/16

METROPOLITAN COUNCIL

SOUTHWEST Green Line LRT Extension

CIVIL - VOLUME 3B
TRACK
PLAN AND PROFILE
STA 2529+50 TO STA 2536+00

DISCIPLINE: TRACK

SHEET NAME: E1-TRK-PRF-006

SHEET 240 OF 420

Jan. 18 2016 07:28 am V:\3400_ADC\CAD\00_EAST\PLANSHEETS\TRACK\E1-TRK-PRF.dwg By: V-RasulL

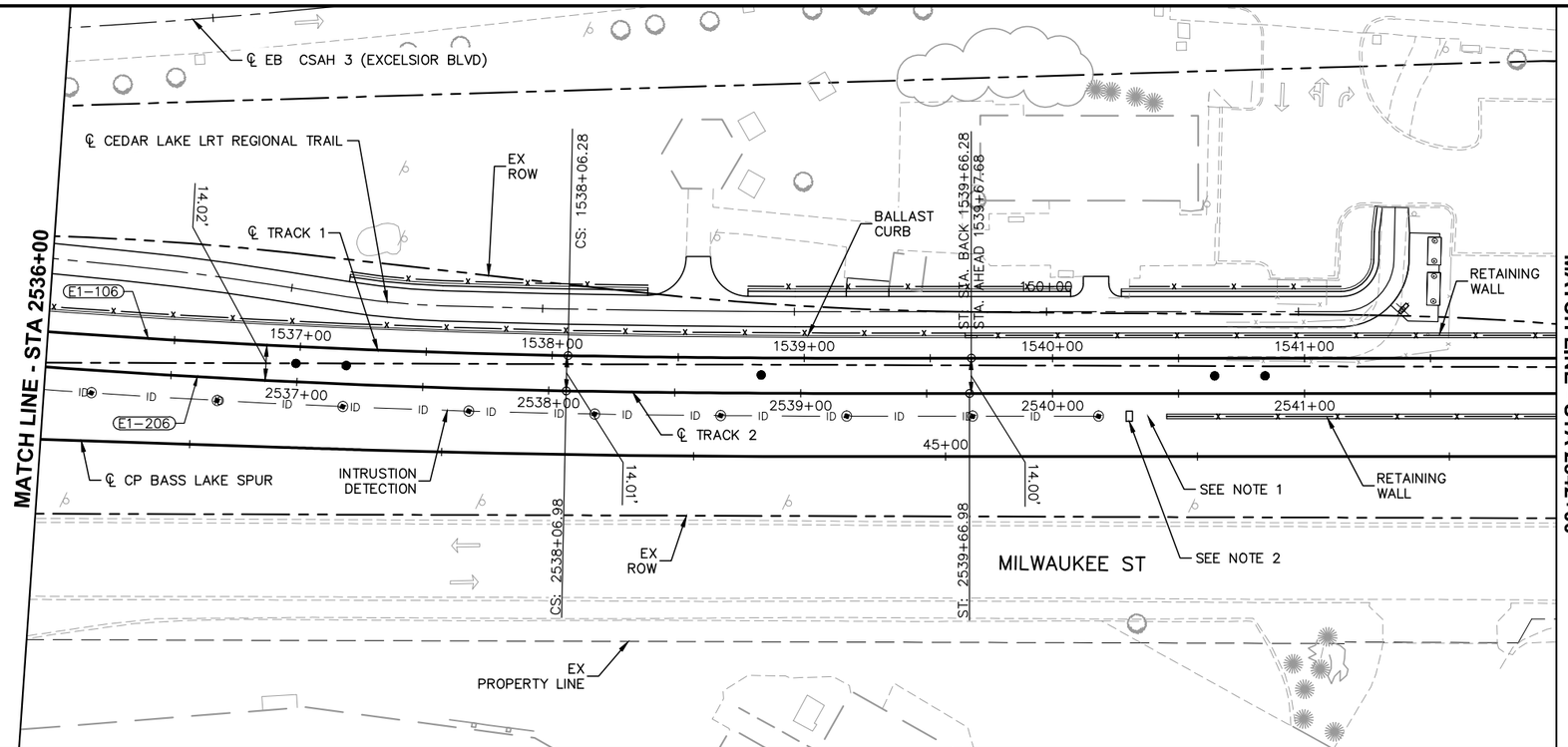

NOTES:
1. SEE SHEET DTL-225 AND DTL-226 FOR BALLAST SHOULDER WIDENING DETAILS.
2. SEE SYSTEMS PLANS FOR INTRUSION DETECTION CABINET DETAILS.

0 5 10 20
VERTICAL
0 15 30 60
HORIZONTAL
SCALE IN FEET

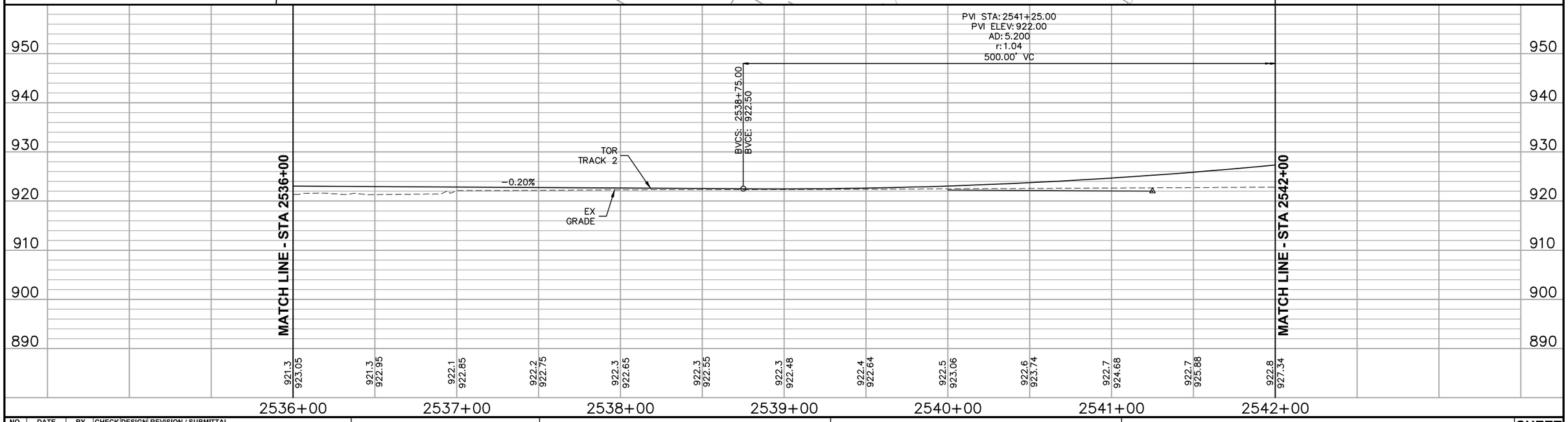

NO.	DATE	BY	CHECK	DESIGN	REVISION / SUBMITTAL

AECOM

90% SUBMISSION - 01/22/16

METROPOLITAN COUNCIL

SOUTHWEST Green Line LRT Extension

CIVIL - VOLUME 3B
TRACK
PLAN AND PROFILE
STA 2536+00 TO STA 2542+00

DISCIPLINE: TRACK
SHEET NAME: E1-TRK-PRF-007

SHEET 241 OF 420

Jan, 18 2016 07:30 am V:\3400_ADC\CAD\00_EAST\PLANSHEETS\TRACK\E1-TRK-PRF.dwg By: V-RasulL

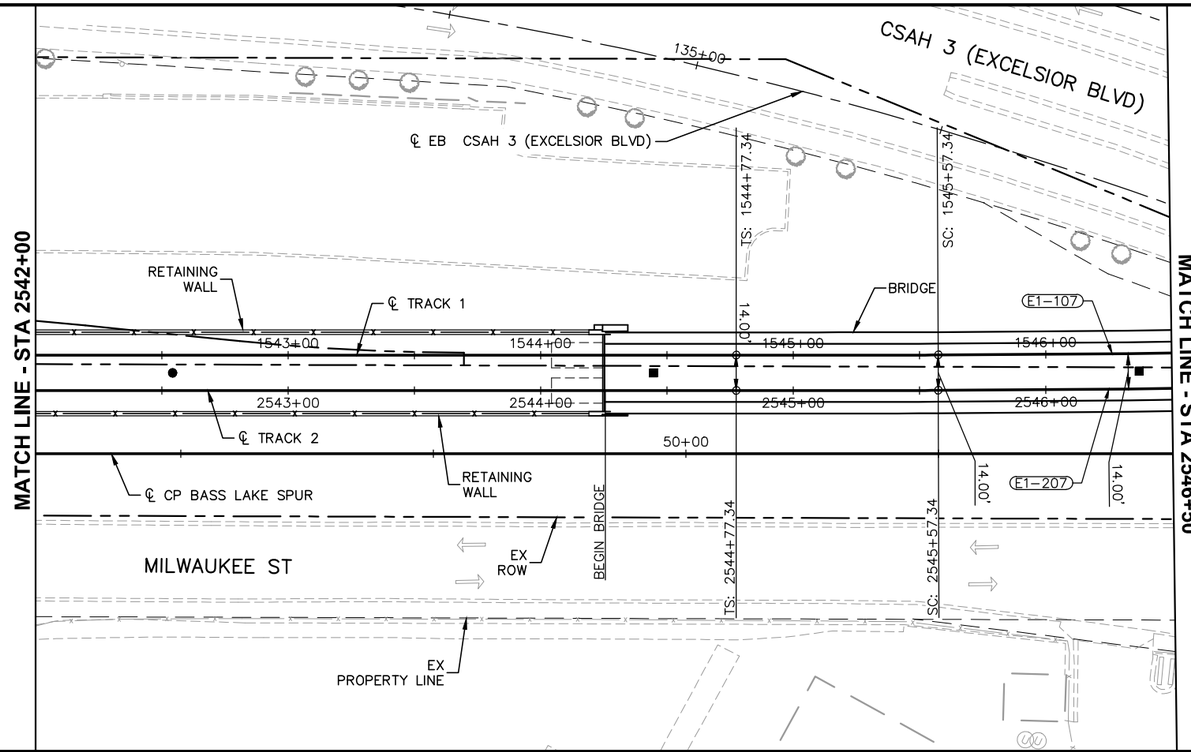

CURVE NO. E1–207
R = 10,014.00'
Lc = 150.74'
Ls = 80.00'
Ea = 0.00"
Eu = 1.20"
V = 55 MPH

CURVE NO. E1–107
R = 10,000.00'
Lc = 150.42'
Ls = 80.00'
Ea = 0.00"
Eu = 1.20"
V = 55 MPH

0 5 10 20
VERTICAL
0 15 30 60
HORIZONTAL
SCALE IN FEET

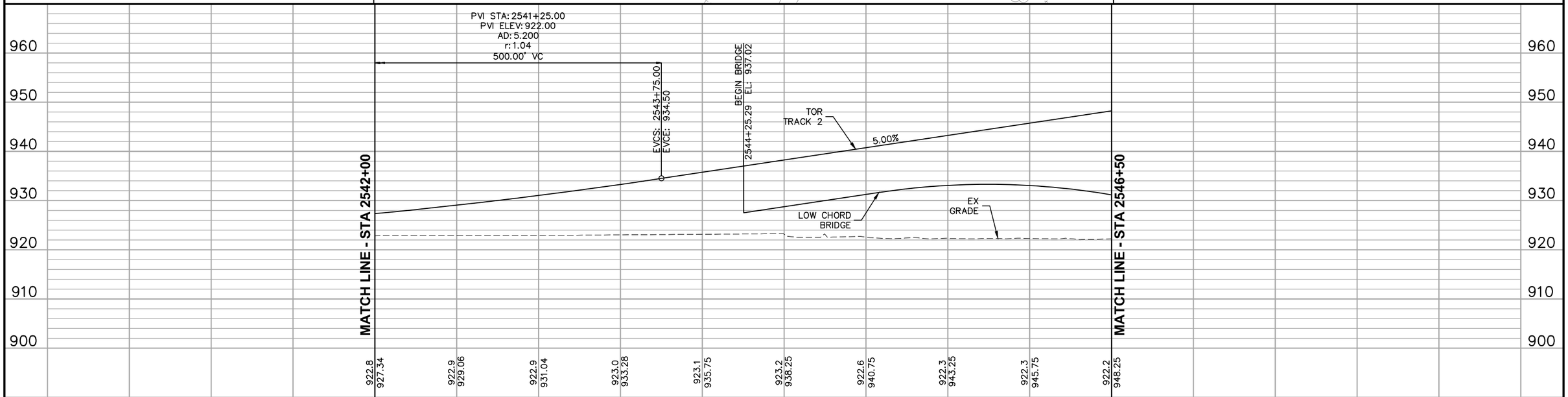

NO.	DATE	BY	CHECK	DESIGN	REVISION / SUBMITTAL

AECOM

90% SUBMISSION - 01/22/16

METROPOLITAN COUNCIL

SOUTHWEST Green Line LRT Extension

CIVIL - VOLUME 3B
TRACK
PLAN AND PROFILE
STA 2542+00 TO STA 2546+50

DISCIPLINE: TRACK

SHEET NAME: E1-TRK-PRF-008

SHEET 242 OF 420

Jan, 18 2016 07:32 am V:\3400_ADC\CAD\00_EAST\PLANSHEETS\TRACK\E1-TRK-PRF.dwg By: V-RasulL

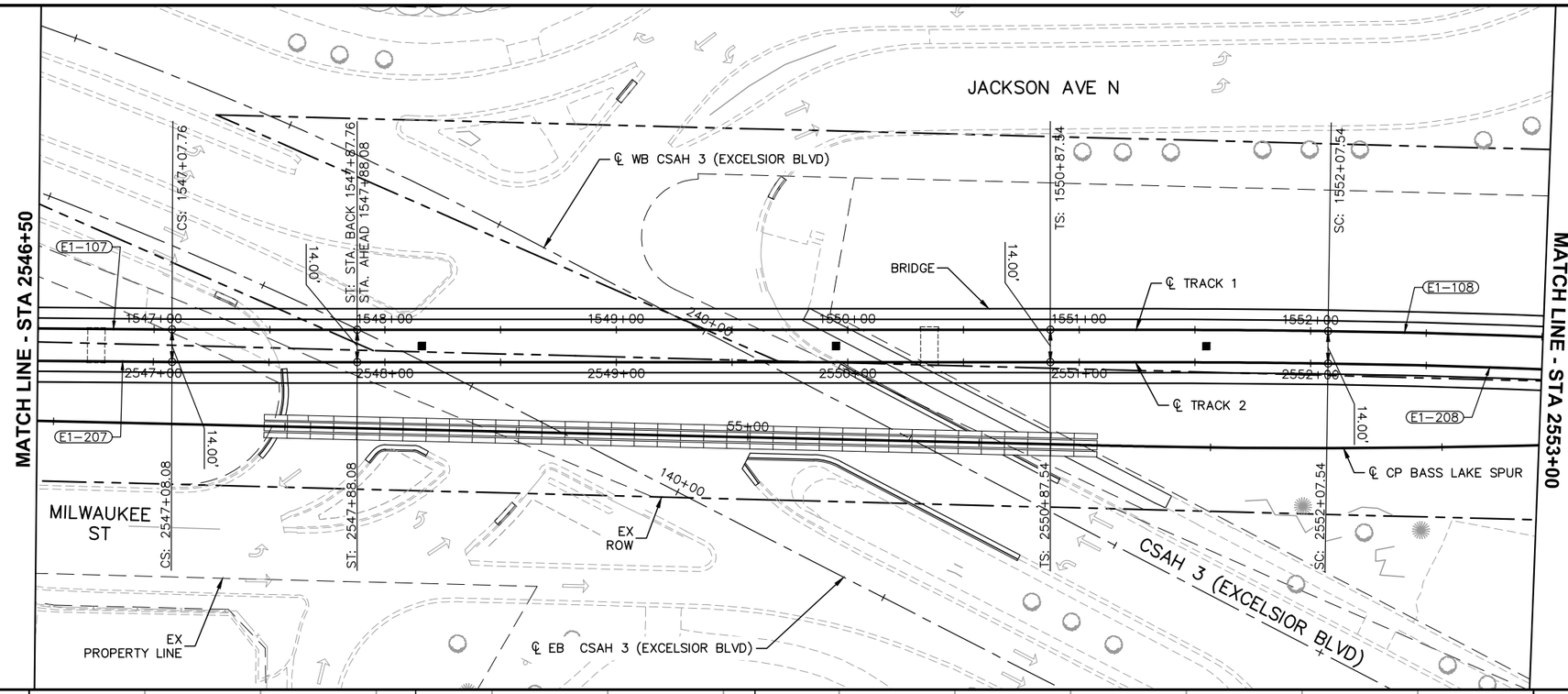

CURVE NO. E1-208
R = 4,000.00'
Lc = 194.16'
Ls = 120.00'
Ea = 1.25"
Eu = 1.75"
V = 55 MPH

CURVE NO. E1-108
R = 4,014.00'
Lc = 195.26'
Ls = 120.00'
Ea = 1.25"
Eu = 1.74"
V = 55 MPH

0 5 10 20
VERTICAL
0 15 30 60
HORIZONTAL
SCALE IN FEET

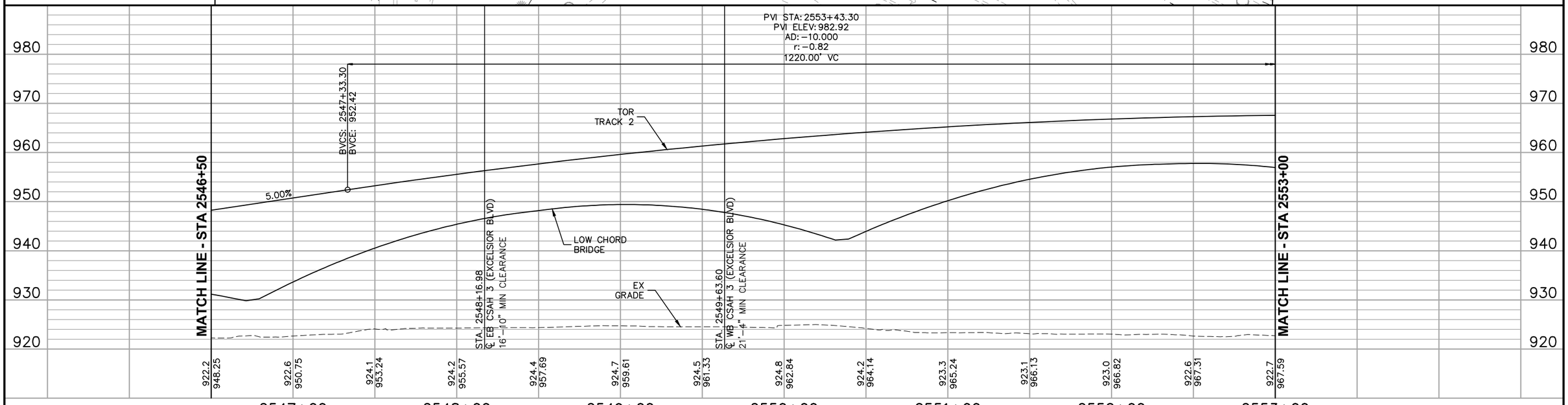

NO.	DATE	BY	CHECK	DESIGN	REVISION / SUBMITTAL

AECOM

90% SUBMISSION - 01/22/16

METROPOLITAN COUNCIL

SOUTHWEST Green Line LRT Extension

CIVIL - VOLUME 3B
TRACK
PLAN AND PROFILE
STA 2546+50 TO STA 2553+00

DISCIPLINE: TRACK

SHEET NAME: E1-TRK-PRF-009

SHEET 243 OF 420

Jan, 18 2016 07:34 am V:\3400_ADC\CAD\00_EAST\PLANSHEETS\TRACK\E1-TRK-PRF.dwg By: V-RasulL

CURVE NO. E1–209
R = 6,014.00'
Lc = 224.89'
Ls = 90.00'
Ea = 0.50"
Eu = 1.49"
V = 55 MPH

CURVE NO. E1–109
R = 6,000.00'
Lc = 224.16'
Ls = 90.00'
Ea = 0.50"
Eu = 1.49"
V = 55 MPH

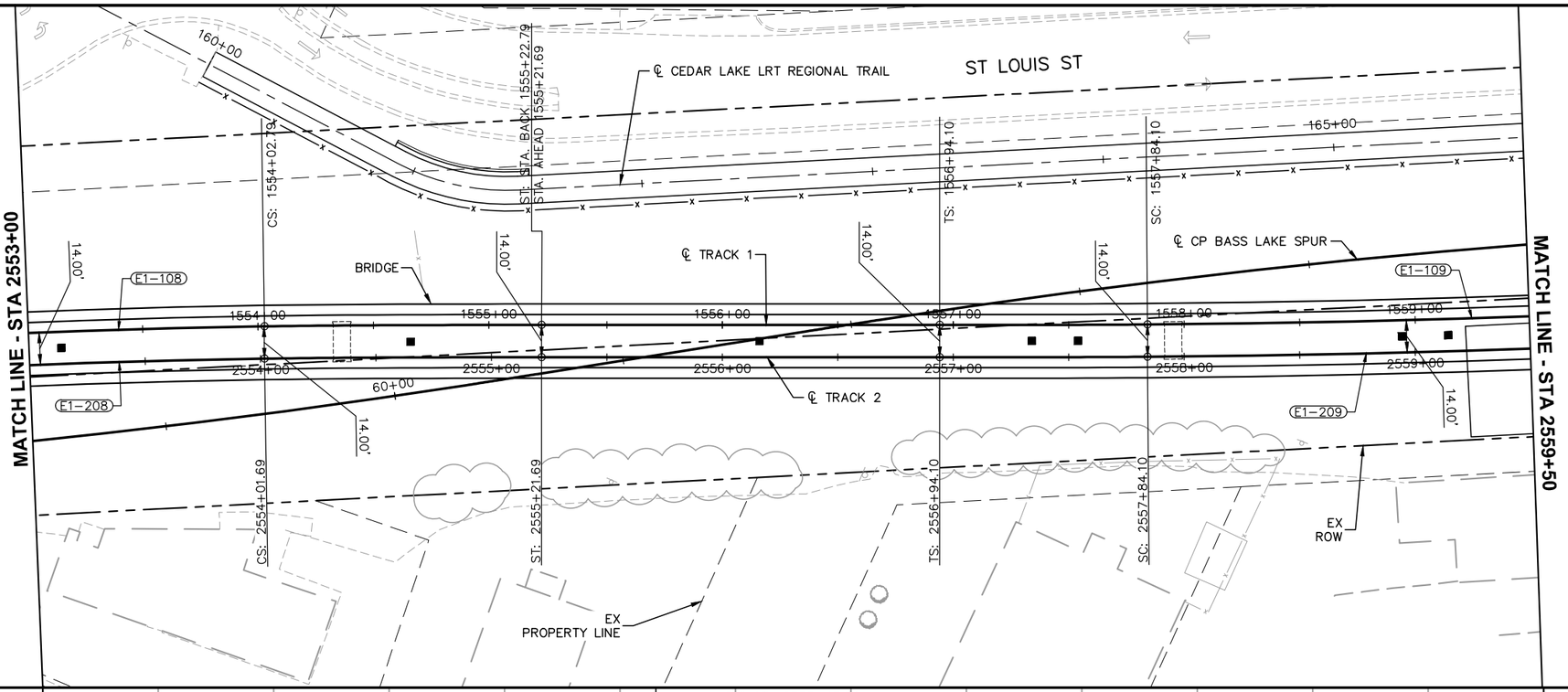

0 5 10 20
VERTICAL
0 15 30 60
HORIZONTAL
SCALE IN FEET

PVI STA: 2553+43.30
PVI ELEV: 982.92
AD: –10.000
r: –0.82
1220.00' VC

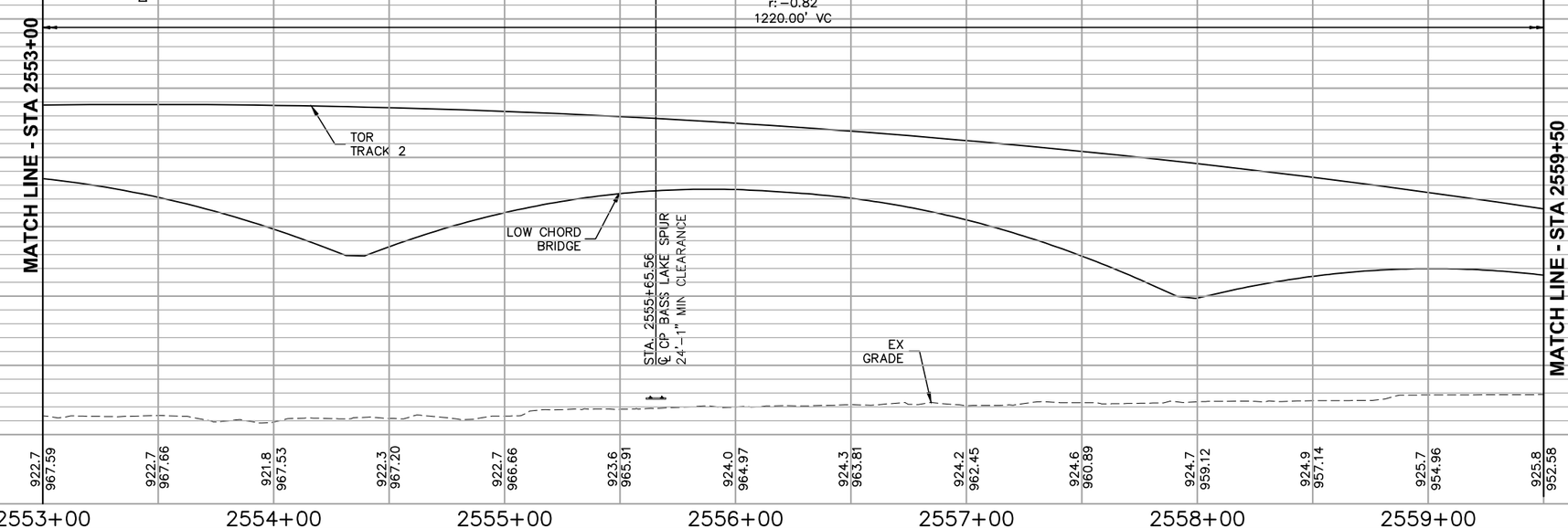

NO.	DATE	BY	CHECK	DESIGN	REVISION / SUBMITTAL

AECOM

90% SUBMISSION - 01/22/16

METROPOLITAN COUNCIL

SOUTHWEST Green Line LRT Extension

CIVIL - VOLUME 3B
TRACK
PLAN AND PROFILE
STA 2553+00 TO STA 2559+50

SHEET 244 OF 420

DISCIPLINE: TRACK

SHEET NAME: E1-TRK-PRF-010

Jan. 18 2016 07:36 am V:\3400_ADC\CAD\00_EAST\PLANSHEETS\TRACK\E1-TRK-PRF.dwg By: V-RasulL

NOTES:
1. SEE SHEET DTL-225 AND DTL-226 FOR BALLAST SHOULDER WIDENING DETAILS.
2. SEE SYSTEMS PLANS FOR INTRUSION DETECTION CABINET DETAILS.

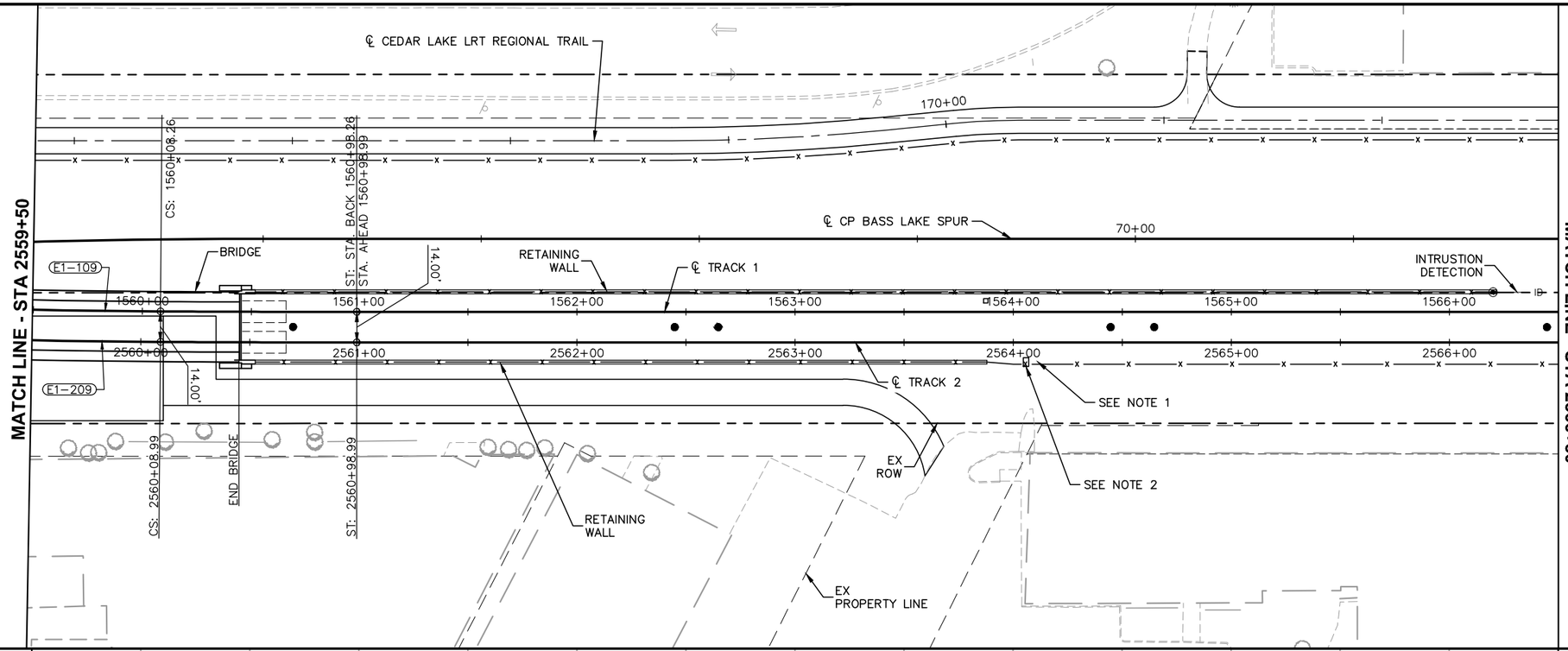

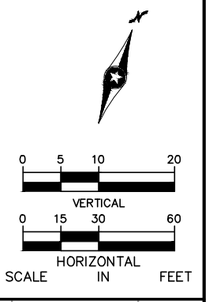

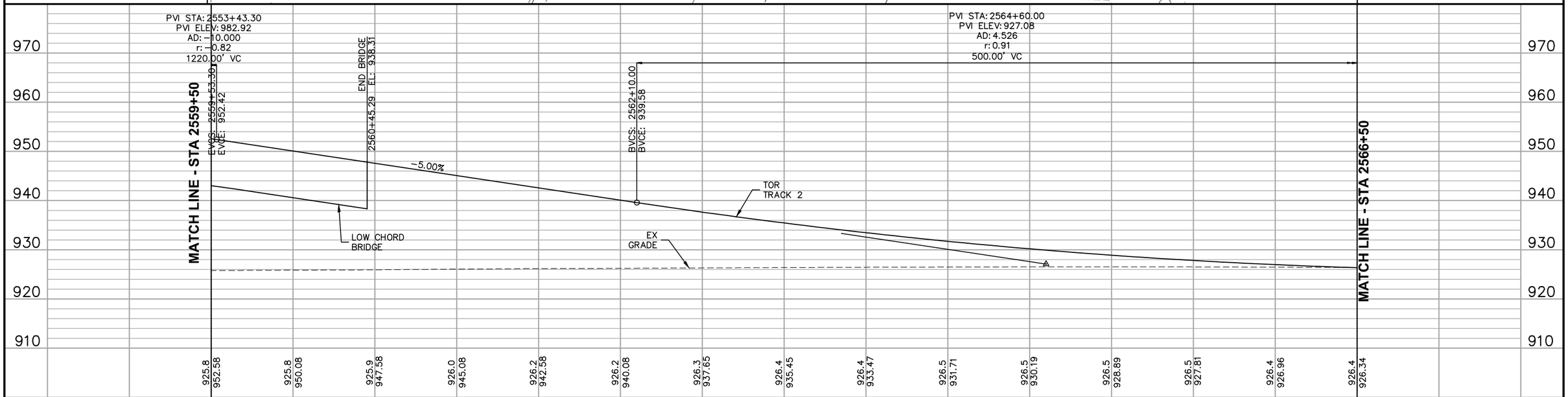

NO.	DATE	BY	CHECK	DESIGN	REVISION / SUBMITTAL

AECOM

90% SUBMISSION - 01/22/16

METROPOLITAN COUNCIL

SOUTHWEST Green Line LRT Extension

CIVIL - VOLUME 3B
TRACK
PLAN AND PROFILE
STA 2559+50 TO STA 2566+50

SHEET 245 OF 420

DISCIPLINE: TRACK

SHEET NAME: E1-TRK-PRF-011

Jan. 18 2016 07:37 am V:\3400_ADC\CAD\00_EAST\PLANSHEETS\TRACK\E1-TRK-PRF.dwg By: V-RasulL

CURVE NO. E1–210
R = 3,000.00'
Lc = 107.08'
Ls = 50.00'
Ea = 1.00"
Eu = 1.11"
V = 40 MPH

CURVE NO. E1–211
R = 3,000.00'
Lc = 107.08'
Ls = 50.00'
Ea = 1.00"
Eu = 1.11"
V = 40 MPH

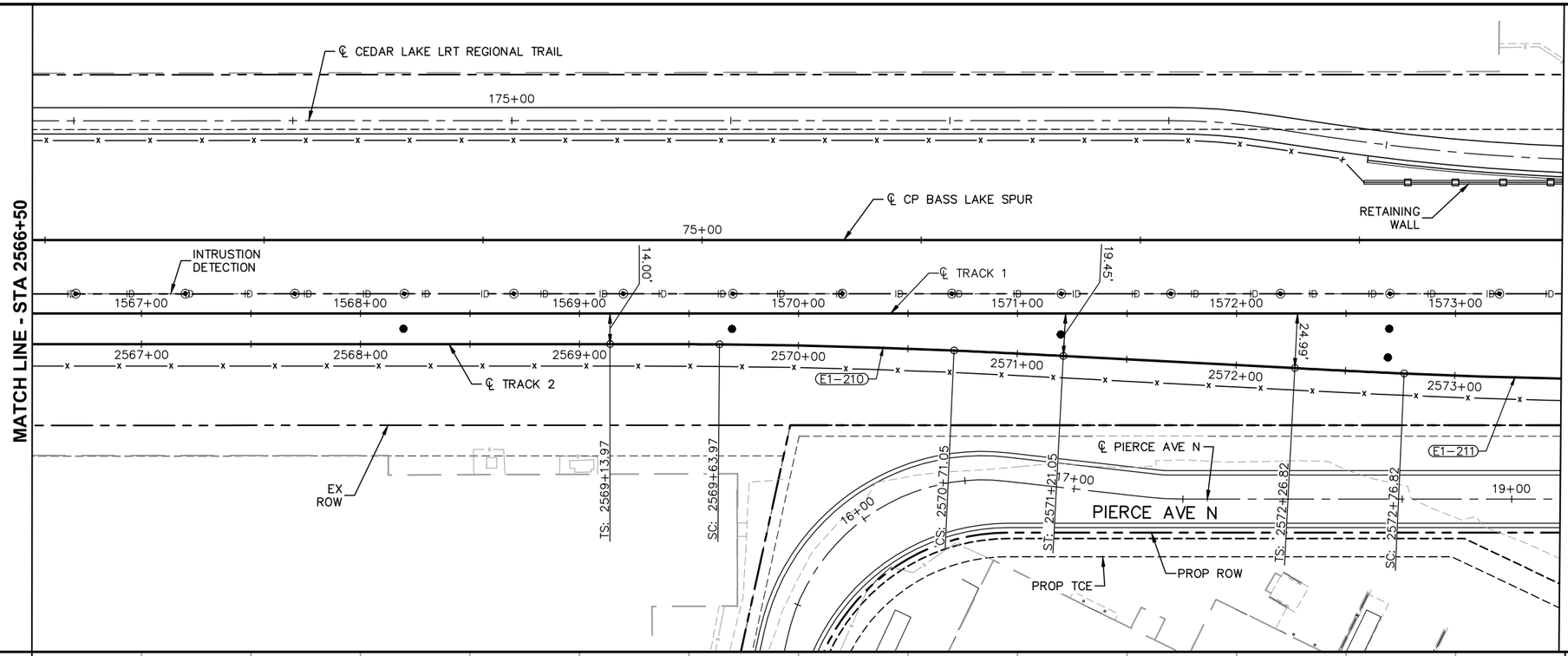

PVI STA: 2564+60.00
PVI ELEV: 927.08
AD: 4.526
r: 0.91
500.00' VC

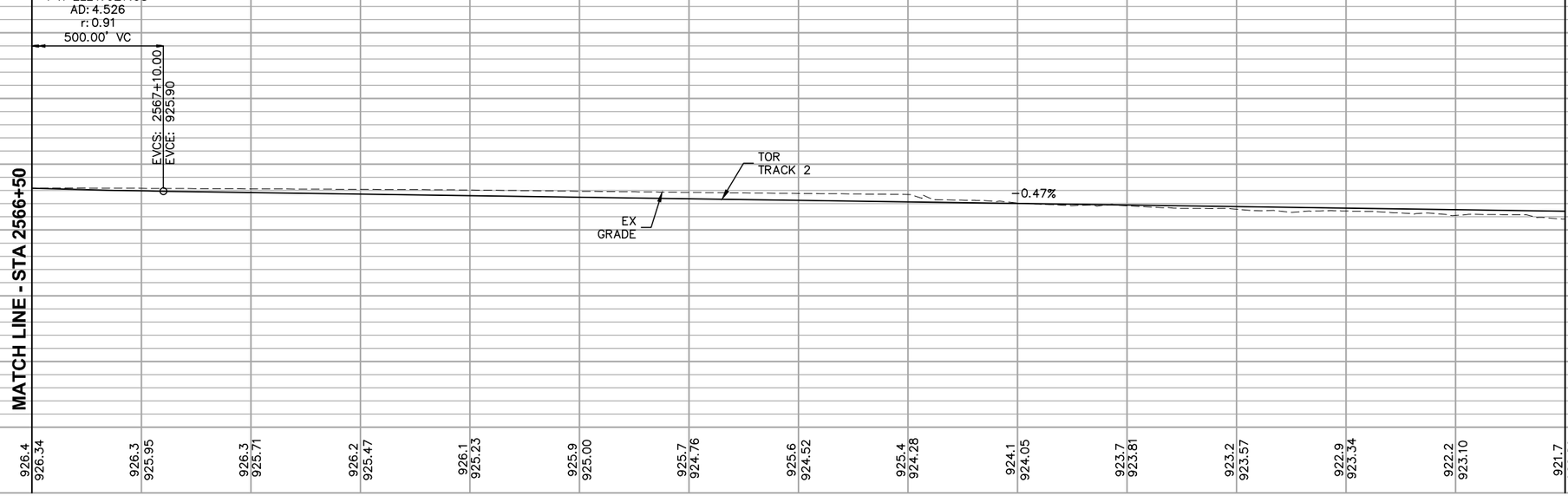

NO.	DATE	BY	CHECK	DESIGN	REVISION / SUBMITTAL

AECOM

90% SUBMISSION - 01/22/16

METROPOLITAN COUNCIL

SOUTHWEST Green Line LRT Extension

CIVIL - VOLUME 3B
TRACK
PLAN AND PROFILE
STA 2566+50 TO STA 2573+50

DISCIPLINE: TRACK

SHEET NAME: E1-TRK-PRF-012

SHEET 246 OF 420

Jan, 18 2016 07:39 am V:\3400_ADC\CAD\00_EAST\PLANSHEETS\TRACK\E1-TRK-PRF.dwg By: V-RasulL

CURVE NO. E1-212
R = 3,000.00'
Lc = 107.08'
Ls = 50.00'
Ea = 1.00"
Eu = 1.11"
V = 40 MPH

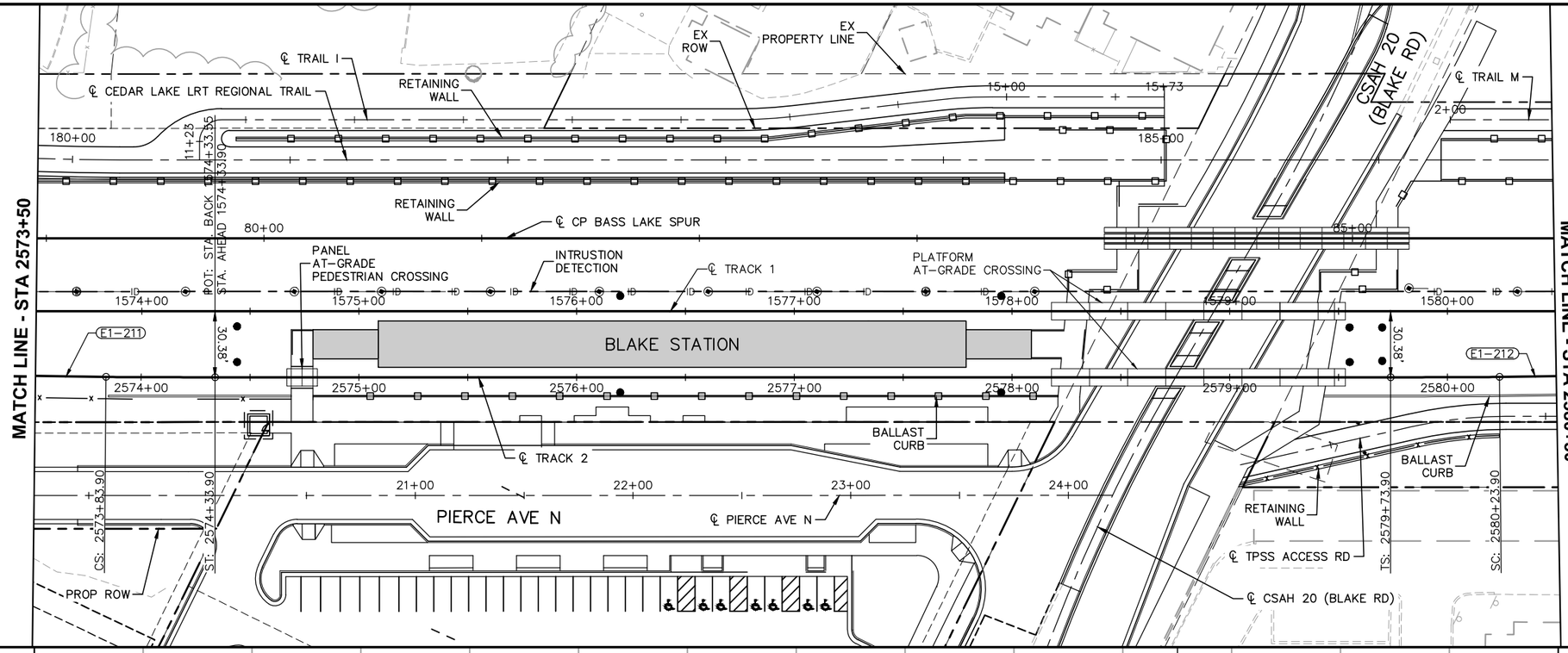

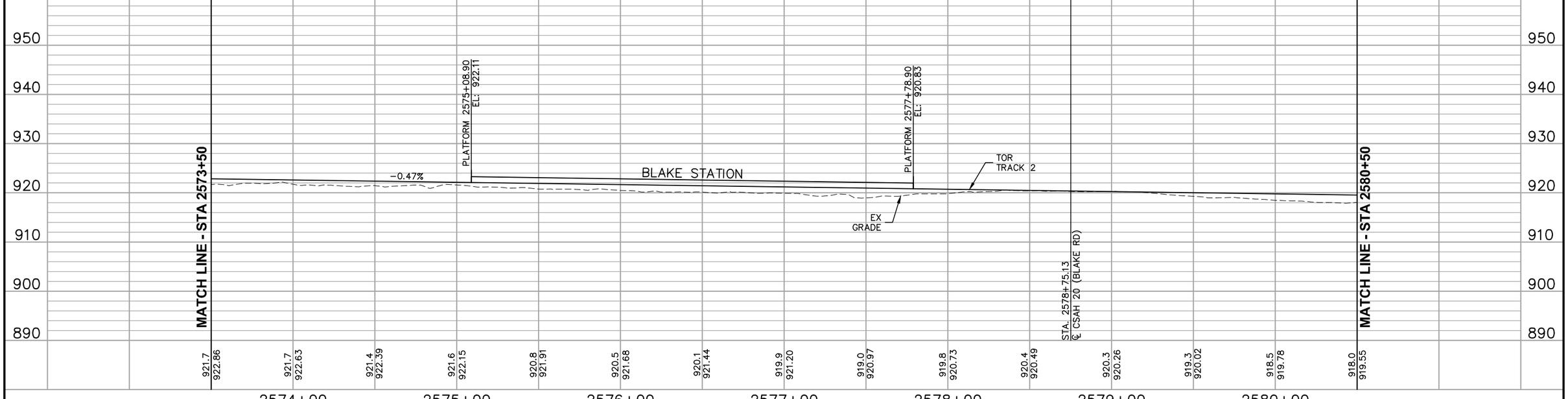

0 5 10 20
VERTICAL
0 15 30 60
HORIZONTAL
SCALE IN FEET

NO.	DATE	BY	CHECK	DESIGN	REVISION / SUBMITTAL

AECOM

90% SUBMISSION - 01/22/16

METROPOLITAN COUNCIL

SOUTHWEST Green Line LRT Extension

CIVIL - VOLUME 3B
TRACK
PLAN AND PROFILE
STA 2573+50 TO STA 2580+50

DISCIPLINE: TRACK

SHEET NAME: E1-TRK-PRF-013

SHEET 247 OF 420

Jan. 18 2016 07:41 am V:\3400_ADC\CAD\00_EAST\PLANSHEETS\TRACK\E1-TRK-PRF.dwg By: V-RosulL

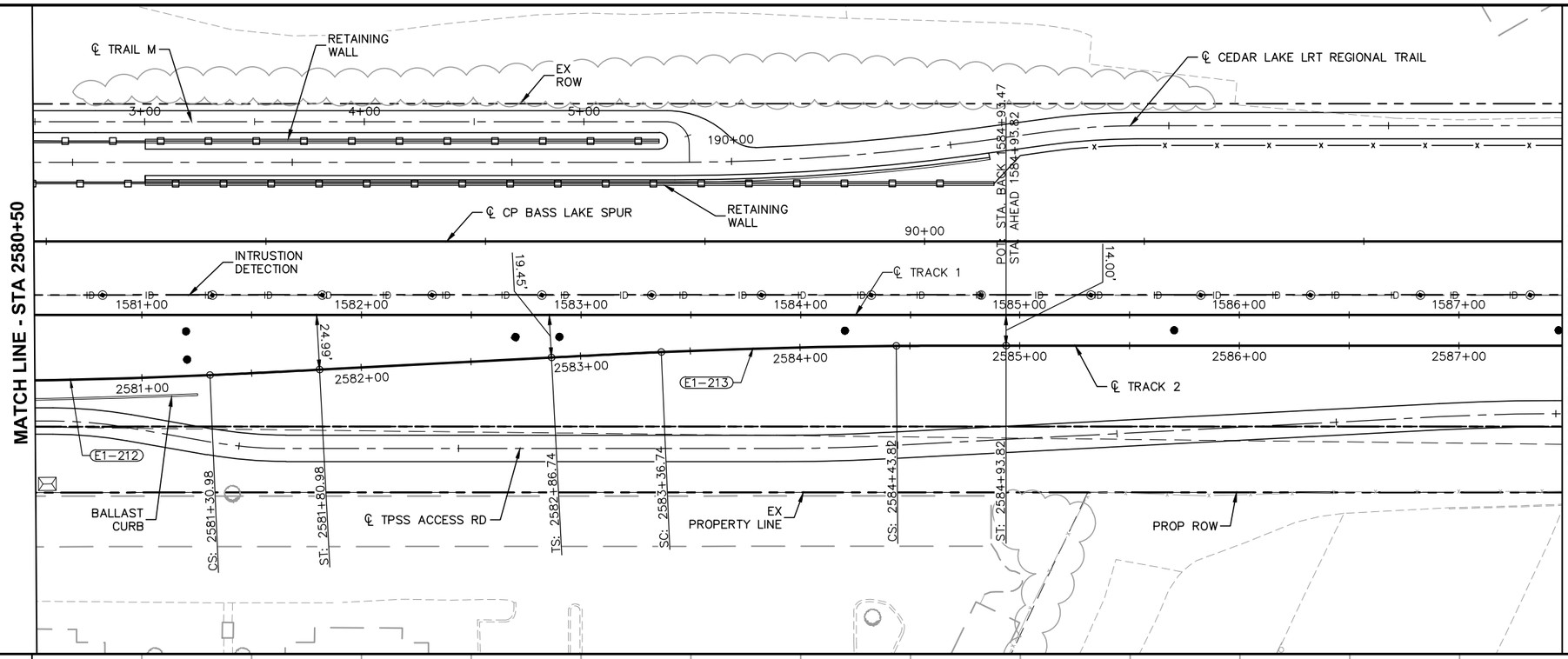

CURVE NO. E1-213
R = 3,000.00'
Lc = 107.08'
Ls = 50.00'
Ea = 1.00"
Eu = 1.11"
V = 40 MPH

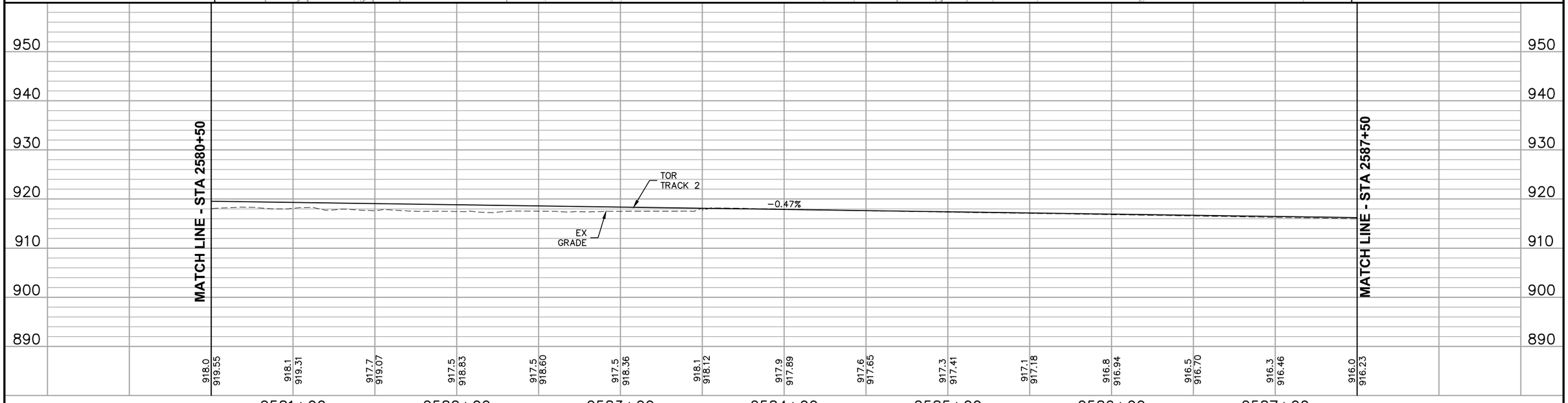

NO.	DATE	BY	CHECK	DESIGN	REVISION / SUBMITTAL

AECOM

90% SUBMISSION - 01/22/16

METROPOLITAN COUNCIL

SOUTHWEST Green Line LRT Extension

CIVIL - VOLUME 3B
TRACK
PLAN AND PROFILE
STA 2580+50 TO STA 2587+50

DISCIPLINE: TRACK

SHEET NAME: E1-TRK-PRF-014

SHEET 248 OF 420

Jan. 18 2016 07:43 am V:\3400_ADC\CAD\00_EAST\PLANSHEETS\TRACK\E1-TRK-PRF.dwg By: V-RasulL

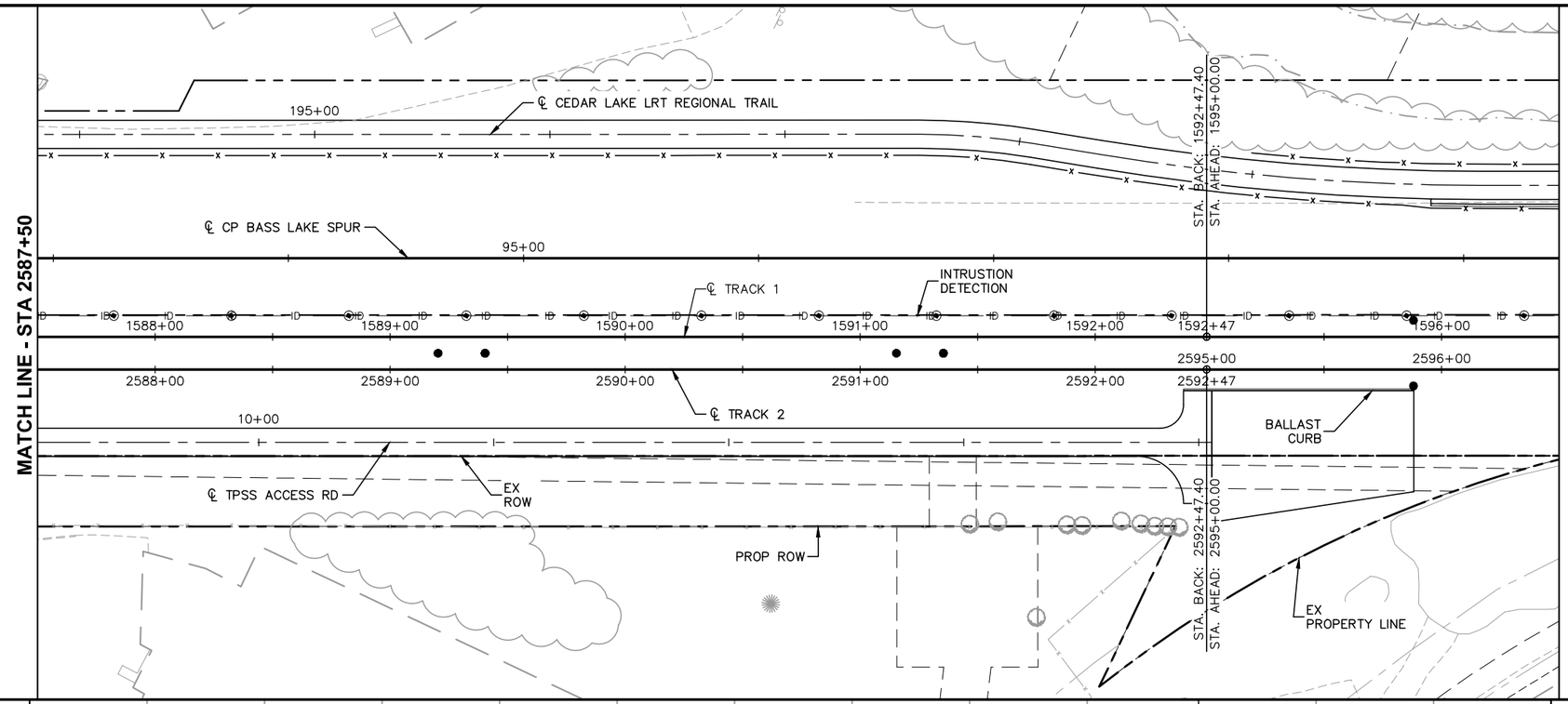

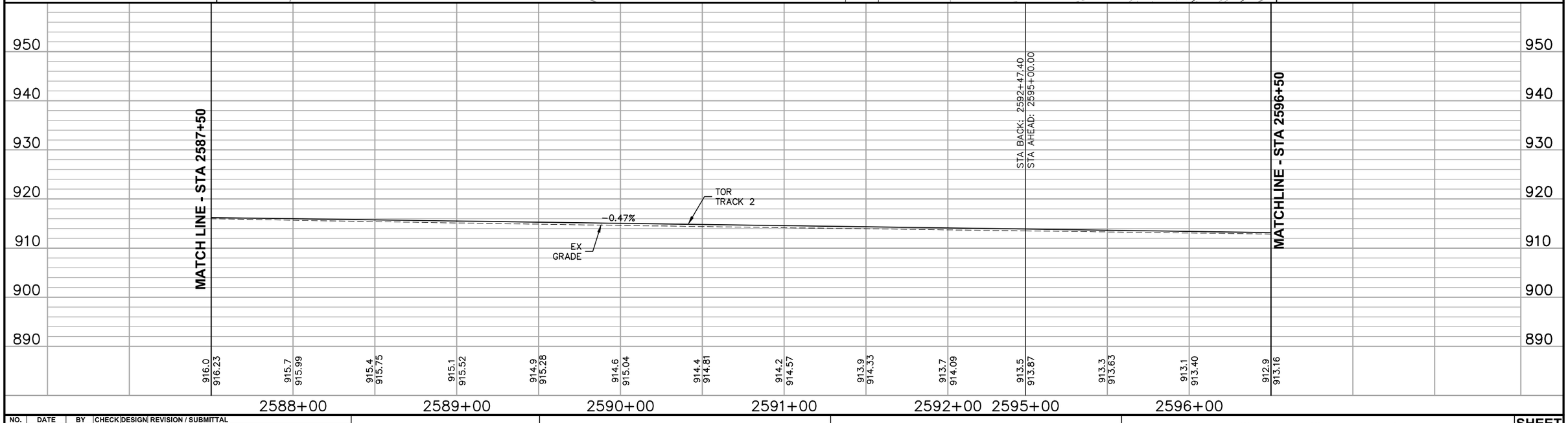

NO.	DATE	BY	CHECK	DESIGN	REVISION / SUBMITTAL

AECOM

90% SUBMISSION - 01/22/16

METROPOLITAN COUNCIL

SOUTHWEST Green Line LRT Extension

CIVIL - VOLUME 3B
TRACK
PLAN AND PROFILE
STA 2587+50 TO STA 2596+50

DISCIPLINE: TRACK

SHEET NAME: E1-TRK-PRF-015

SHEET 249 OF 420

Jan. 18 2016 07:45 am V:\3400_ADC\CAD\00_EAST\PLANSHEETS\TRACK\E1-TRK-PRF.dwg By: V-RasulL

MATCHLINE - STA 2596+50

MATCH LINE - STA 2602+00

℄ CEDAR LAKE LRT REGIONAL TRAIL

RETAINING WALL

205+00

℄ CP BASS LAKE SPUR

100+00

INTRUSION DETECTION

14.00'

℄ TRACK 1

EX ROW

1597+00 1598+00 1599+00 1600+00 1601+00

2597+00 2598+00 2599+00 2600+00 2601+00

℄ TRACK 2

EX PROPERTY LINE

0 5 10 20
VERTICAL
0 15 30 60
HORIZONTAL
SCALE IN FEET

PVI STA: 2597+00.00
PVI ELEV: 912.93
AD: 0.344
r: 0.34
100.00' VC

BVCS: 2596+50.00
BVCE: 913.16

EVCS: 2597+50.00
EVCE: 912.86

−0.47%

−0.13%

TOR TRACK 2

EX GRADE

950 940 930 920 910 900 890

MATCHLINE - STA 2596+50

MATCH LINE - STA 2602+00

EX GRADE 912.9 913.16 | 912.7 912.97 | 912.5 912.86 | 912.3 912.80 | 912.2 912.74 | 912.1 912.68 | 912.0 912.61 | 911.9 912.55 | 911.9 912.49 | 911.9 912.42 | 911.9 912.36 | 911.8 912.30

PROP TOR

2597+00 2598+00 2599+00 2600+00 2601+00 2602+00

NO.	DATE	BY	CHECK	DESIGN	REVISION / SUBMITTAL

AECOM

90% SUBMISSION - 01/22/16

METROPOLITAN COUNCIL

SOUTHWEST Green Line LRT Extension

CIVIL - VOLUME 3B
TRACK
PLAN AND PROFILE
STA 2596+50 TO STA 2602+00

DISCIPLINE: TRACK

SHEET NAME: E2-TRK-PRF-001

SHEET 250 OF 420

Jan, 18 2016 08:08 am V:\3400_ADC\CAD\00_EAST\PLANSHEETS\TRACK\E2-TRK-PRF.dwg By: V-RasulL

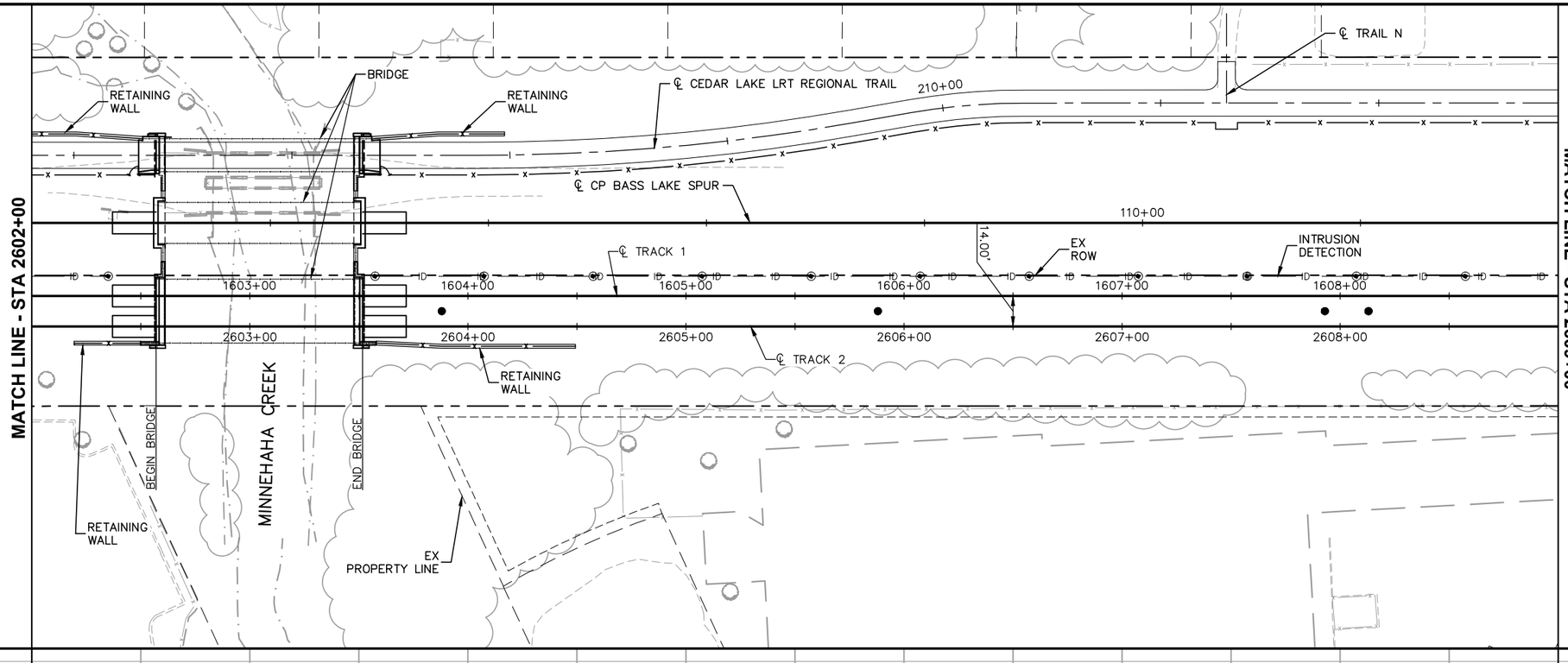

NO.	DATE	BY	CHECK	DESIGN	REVISION / SUBMITTAL

AECOM

90% SUBMISSION - 01/22/16

METROPOLITAN COUNCIL

SOUTHWEST Green Line LRT Extension

CIVIL - VOLUME 3B
TRACK
PLAN AND PROFILE
STA 2602+00 TO STA 2609+00

DISCIPLINE: TRACK

SHEET NAME: E2-TRK-PRF-002

SHEET 251 OF 420

Jan. 18 2016 08:10 am V:\3400_ADC\CAD\00_EAST\PLANSHEETS\TRACK\E2-TRK-PRF.dwg By: V-RasulL

MATCH LINE - STA 2609+00

MATCH LINE - STA 2616+00

215+00

℄ CEDAR LAKE LRT REGIONAL TRAIL

℄ CP BASS LAKE SPUR

115+00

INTRUSION DETECTION

EX ROW

℄ TRACK 1

14.00'

BALLAST CURB

1610+00 1611+00 1612+00 1613+00 1614+00 1615+00

2610+00 2611+00 2612+00 2613+00 2614+00 2615+00

℄ TRACK 2

EX PROPERTY LINE

0 5 10 20

VERTICAL

0 15 30 60

HORIZONTAL

SCALE IN FEET

940 930 920 910 900 890 880

MATCH LINE - STA 2609+00

MATCH LINE - STA 2616+00

TOR TRACK 2

-0.13%

EX GRADE

910.7 911.41 | 910.7 911.35 | 910.8 911.29 | 910.6 911.23 | 910.7 911.16 | 910.7 911.10 | 910.7 911.04 | 910.3 910.97 | 910.6 910.91 | 910.5 910.85 | 910.0 910.78 | 910.2 910.72 | 910.2 910.66 | 910.1 910.59 | 909.6 910.53

2609+00 2610+00 2611+00 2612+00 2613+00 2614+00 2615+00 2616+00

NO.	DATE	BY	CHECK	DESIGN	REVISION / SUBMITTAL

AECOM

90% SUBMISSION - 01/22/16

METROPOLITAN COUNCIL

SOUTHWEST Green Line LRT Extension

CIVIL - VOLUME 3B
TRACK
PLAN AND PROFILE
STA 2609+00 TO STA 2616+00

DISCIPLINE: TRACK

SHEET NAME: E2-TRK-PRF-003

SHEET 252 OF 420

Jan. 18 2016 08:11 am V:\3400_ADC\CAD\00_EAST\PLANSHEETS\TRACK\E2-TRK-PRF.dwg By: V-RasulL

MATCH LINE - STA 2616+00

220+00

℄ CEDAR LAKE LRT REGIONAL TRAIL

225+00

℄ CP BASS LAKE SPUR

120+00

125+00

INTRUSION DETECTION

BALLAST CURB

℄ TRACK 1

1617+00 1618+00 1619+00 1620+00 1621+00 1622+00

2617+00 2618+00 2619+00 2620+00 2621+00 2622+00

14.00'

℄ TRACK 2

EX ROW

EX PROPERTY LINE

MATCH LINE - STA 2623+00

0 5 10 20
VERTICAL
0 15 30 60
HORIZONTAL
SCALE IN FEET

PVI STA: 2622+50.00
PVI ELEV: 909.71
AD: −0.533
r: −0.53
100.00' VC

BVCS: 2622+00.00
BVCE: 909.77

EVCS: 2623+00.00
EVCE: 909.38

EX GRADE

−0.13%

−0.66%

TOR TRACK 2

940 930 920 910 900 890 880

909.6 910.53 | 909.8 910.47 | 908.9 910.41 | 909.6 910.34 | 909.1 910.28 | 909.6 910.22 | 909.5 910.15 | 910.2 910.09 | 910.2 910.03 | 910.1 909.96 | 910.0 909.90 | 909.8 909.84 | 909.7 909.77 | 909.6 909.65 | 909.4 909.38

2616+00 2617+00 2618+00 2619+00 2620+00 2621+00 2622+00 2623+00

NO.	DATE	BY	CHECK	DESIGN	REVISION / SUBMITTAL

AECOM

90% SUBMISSION - 01/22/16

METROPOLITAN COUNCIL

SOUTHWEST Green Line LRT Extension

CIVIL - VOLUME 3B
TRACK
PLAN AND PROFILE
STA 2616+00 TO STA 2623+00

DISCIPLINE: TRACK

SHEET NAME: E2-TRK-PRF-004

SHEET 253 OF 420

Jan, 18 2016 08:12 am V:\3400_ADC\CAD\00_EAST\PLANSHEETS\TRACK\E2-TRK-PRF.dwg By: V-RasulL

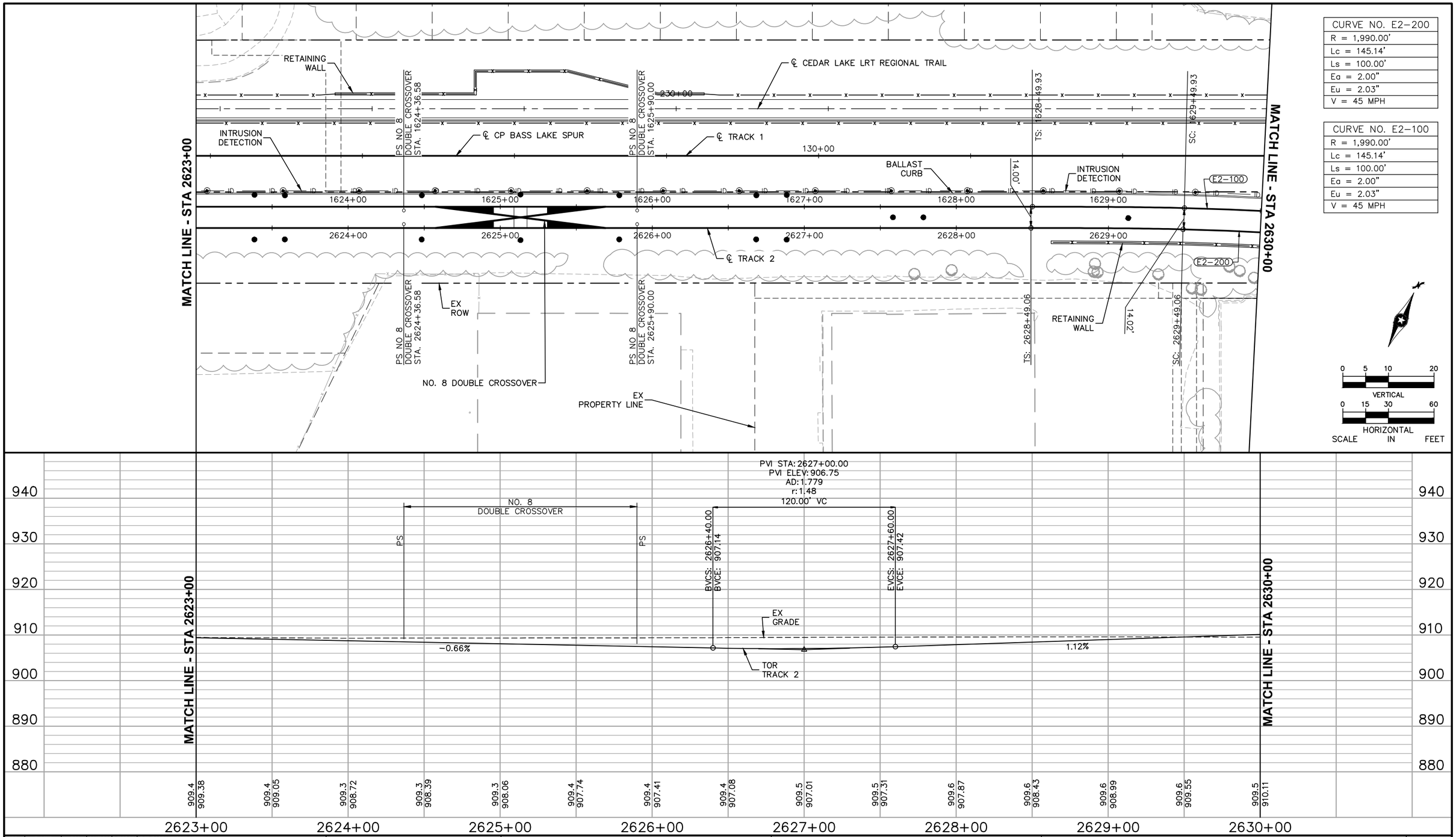

NO.	DATE	BY	CHECK	DESIGN	REVISION / SUBMITTAL

AECOM

90% SUBMISSION - 01/22/16

METROPOLITAN COUNCIL

SOUTHWEST Green Line LRT Extension

CIVIL - VOLUME 3B
TRACK
PLAN AND PROFILE
STA 2623+00 TO STA 2630+00

DISCIPLINE: TRACK

SHEET NAME: E2-TRK-PRF-005

SHEET 254 OF 420

Jan, 18 2016 08:14 am V:\3400_ADC\CAD\00_EAST\PLANSHEETS\TRACK\E2-TRK-PRF.dwg By: V-RasulL

CURVE NO. E2-101
R = 1,460.00'
Lc = 109.85'
Ls = 70.00'
Ea = 1.50"
Eu = 1.82"
V = 35 MPH

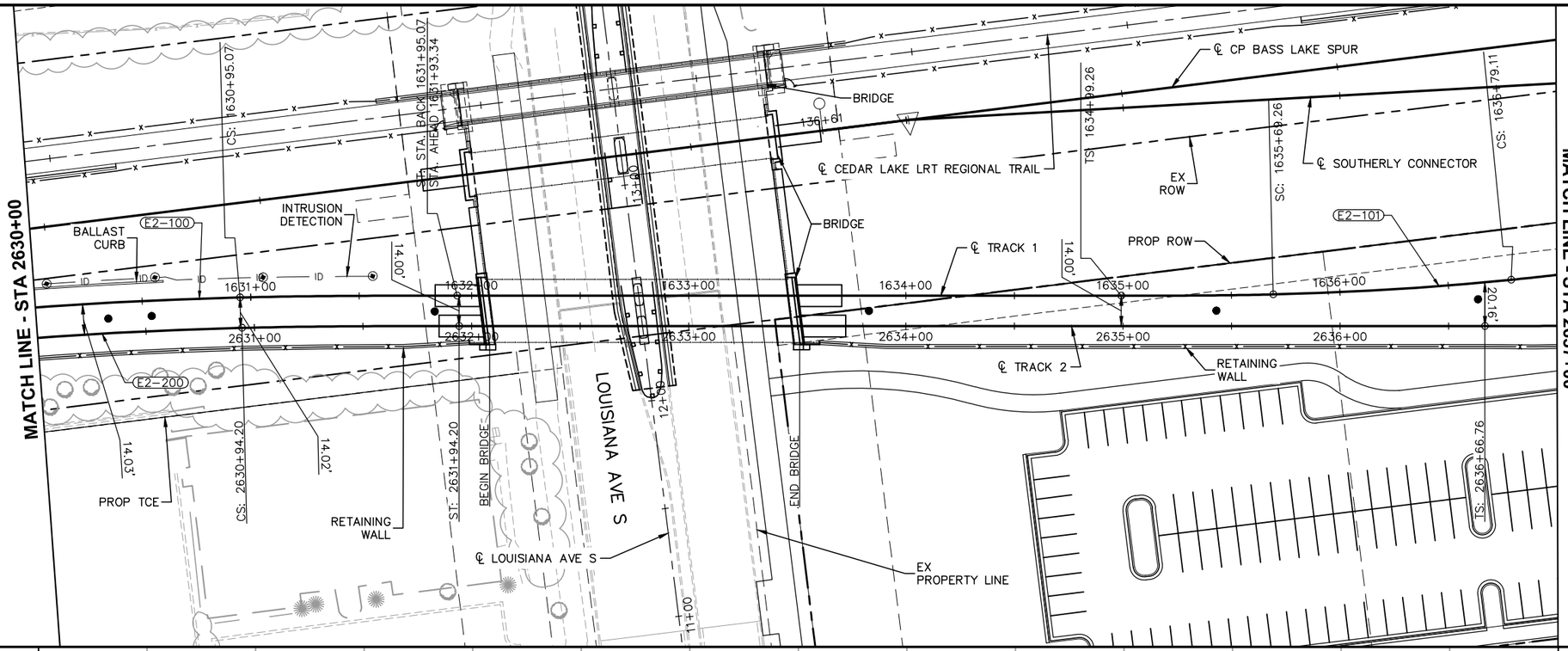

0 5 10 20
VERTICAL
0 15 30 60
HORIZONTAL
SCALE IN FEET

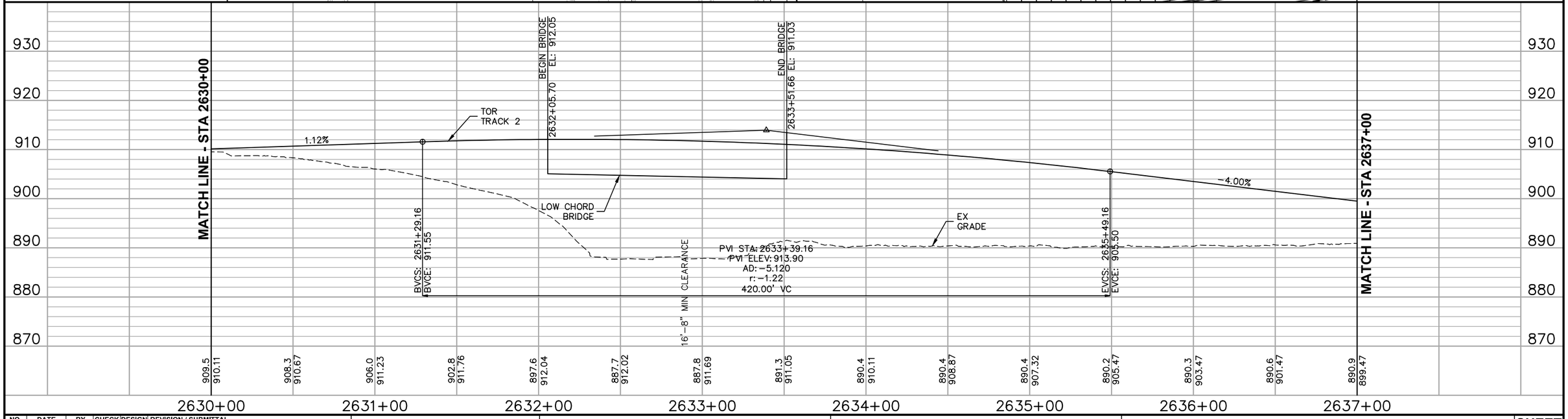

NO.	DATE	BY	CHECK	DESIGN	REVISION / SUBMITTAL

AECOM

90% SUBMISSION - 01/22/16

METROPOLITAN COUNCIL

SOUTHWEST Green Line LRT Extension

CIVIL - VOLUME 3B
TRACK
PLAN AND PROFILE
STA 2630+00 TO STA 2637+00

DISCIPLINE: TRACK

SHEET NAME: E2-TRK-PRF-006

SHEET 255 OF 420

Jan. 18 2016 08:15 am V:\3400_ADC\CAD\00_EAST\PLANSHEETS\TRACK\E2-TRK-PRF.dwg By: V-RasulL

CURVE NO. E2–201
R = 1,000.00'
Lc = 63.19'
Ls = 60.00'
Ea = 1.75"
Eu = 1.81"
V = 30 MPH

CURVE NO. E2–102
R = 2,600.00'
Lc = 162.37'
Ls = 60.00'
Ea = 1.25"
Eu = 1.19"
V = 40 MPH

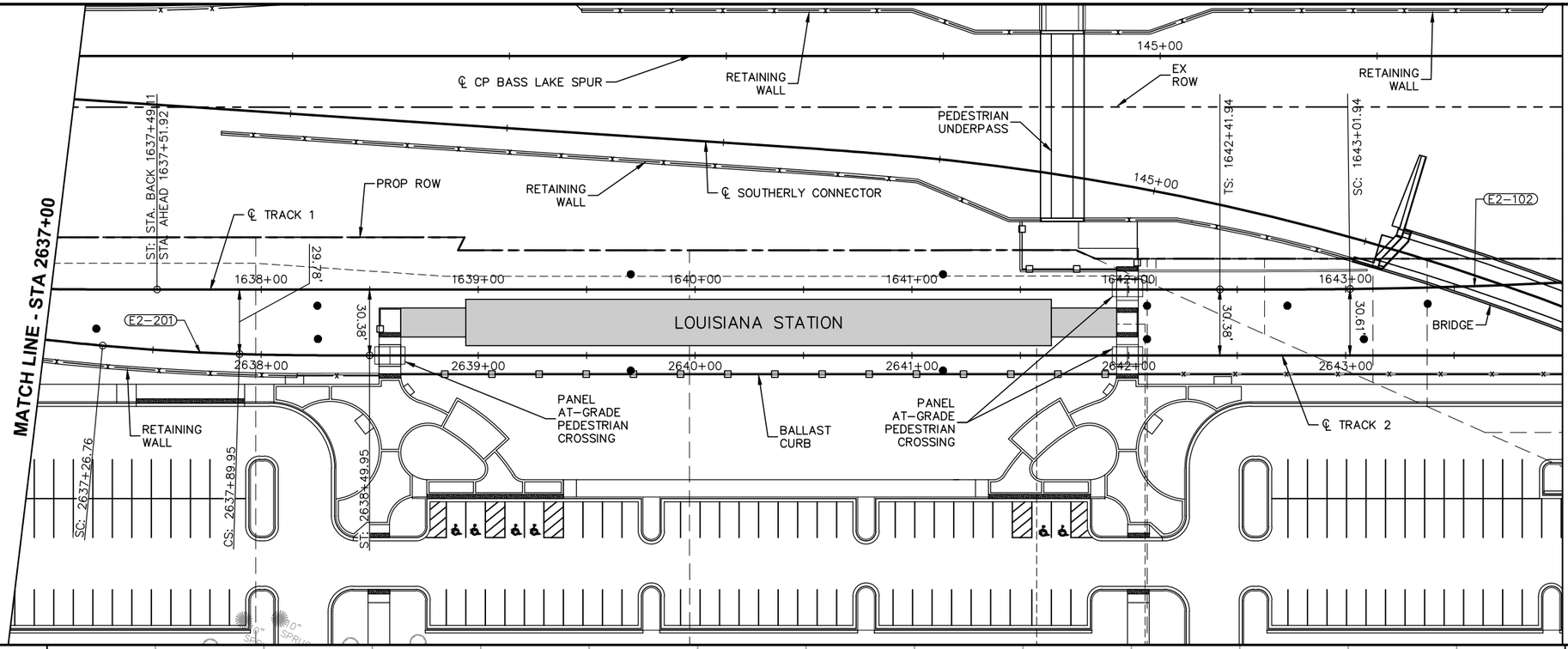

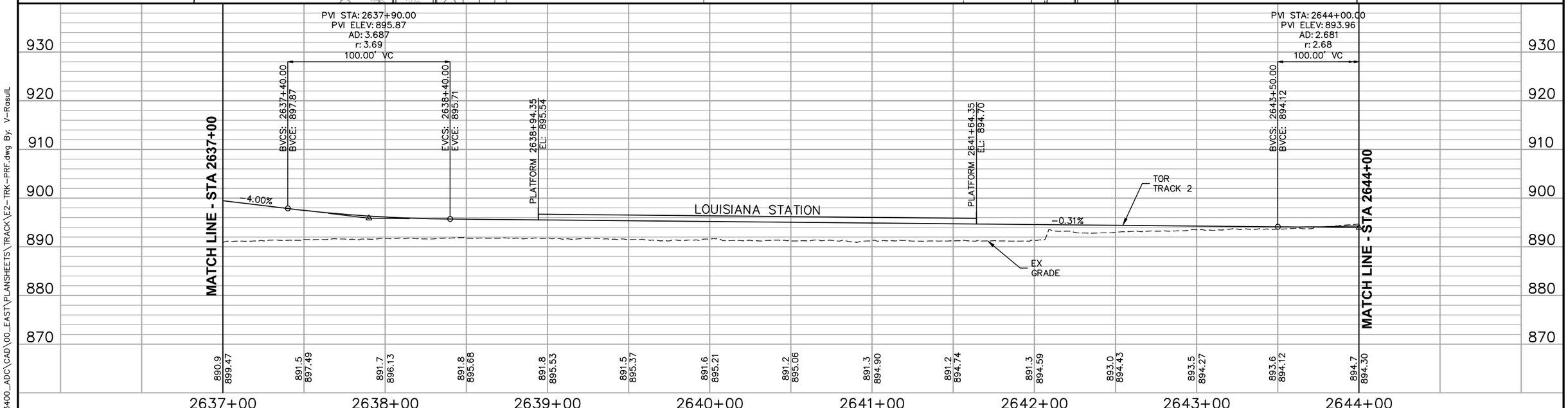

0 5 10 20
VERTICAL
0 15 30 60
HORIZONTAL
SCALE IN FEET

NO.	DATE	BY	CHECK	DESIGN	REVISION / SUBMITTAL

AECOM

90% SUBMISSION - 01/22/16

METROPOLITAN COUNCIL

SOUTHWEST Green Line LRT Extension

CIVIL - VOLUME 3B
TRACK
PLAN AND PROFILE
STA 2637+00 TO STA 2644+00

DISCIPLINE: TRACK

SHEET NAME: E2-TRK-PRF-007

SHEET 256 OF 420

Jan, 18 2016 08:17 am V:\3400_ADC\CAD\00_EAST\PLANSHEETS\TRACK\E2-TRK-PRF.dwg By: V-RasulL

CURVE NO. E2-202
R = 1,770.00'
Lc = 189.08'
Ls = 80.00'
Ea = 1.75"
Eu = 1.83"
V = 40 MPH

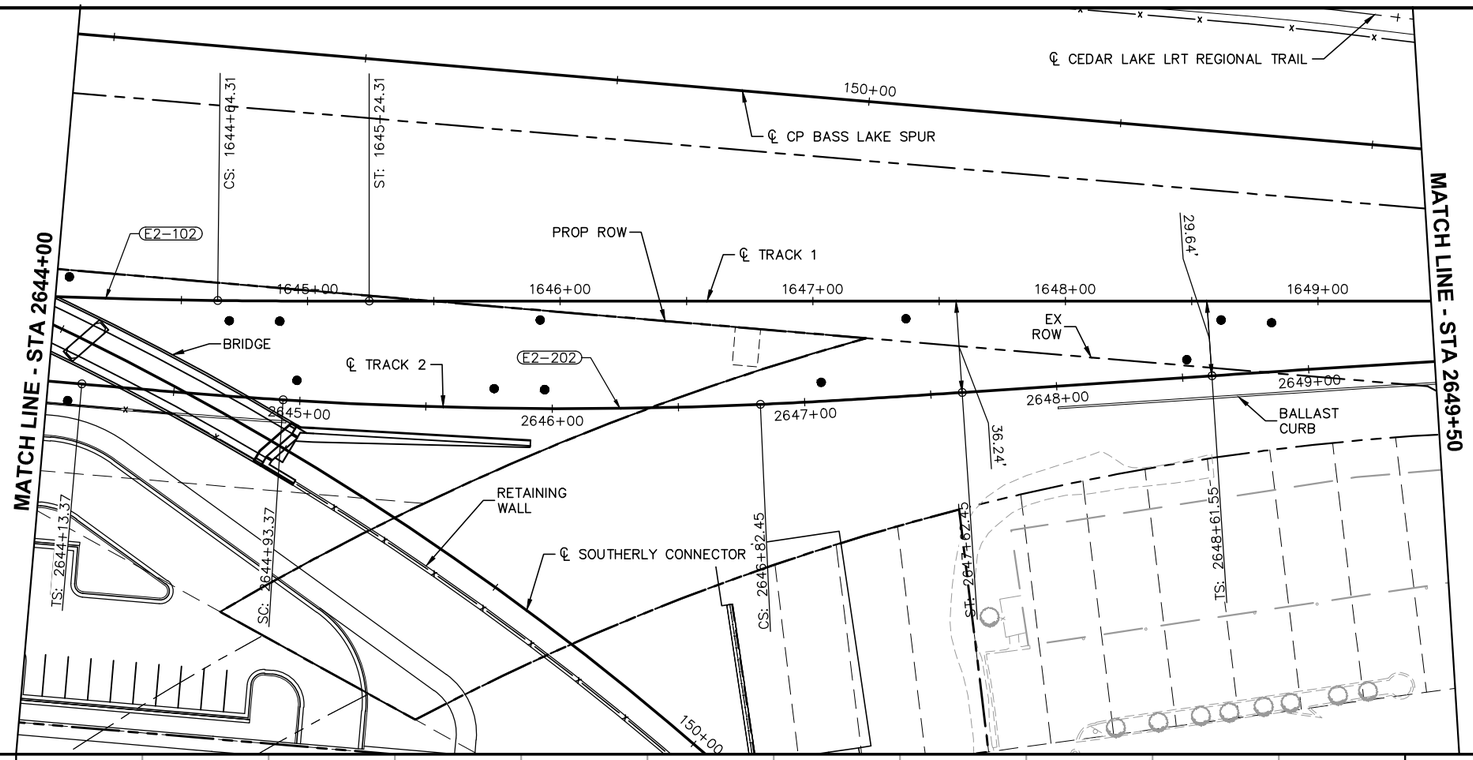

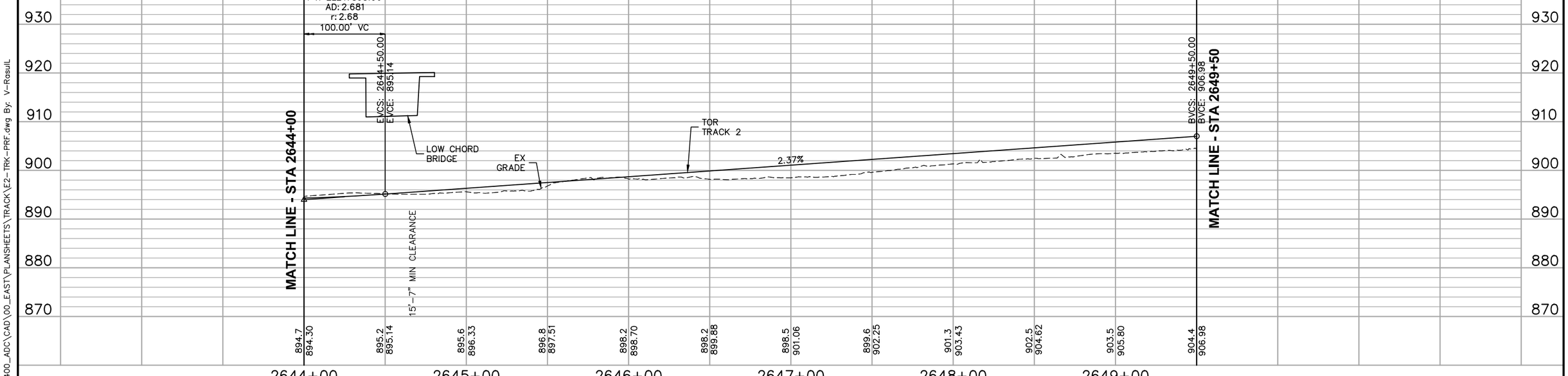

NO.	DATE	BY	CHECK	DESIGN	REVISION / SUBMITTAL

AECOM

90% SUBMISSION - 01/22/16

METROPOLITAN COUNCIL

SOUTHWEST Green Line LRT Extension

CIVIL - VOLUME 3B
TRACK
PLAN AND PROFILE
STA 2644+00 TO STA 2649+50

DISCIPLINE: TRACK

SHEET NAME: E2-TRK-PRF-008

SHEET 257 OF 420

Jan, 18 2016 08:18 am V:\3400_ADC\CAD\00_EAST\PLANSHEETS\TRACK\E2-TRK-PRF.dwg By: V-RasulL

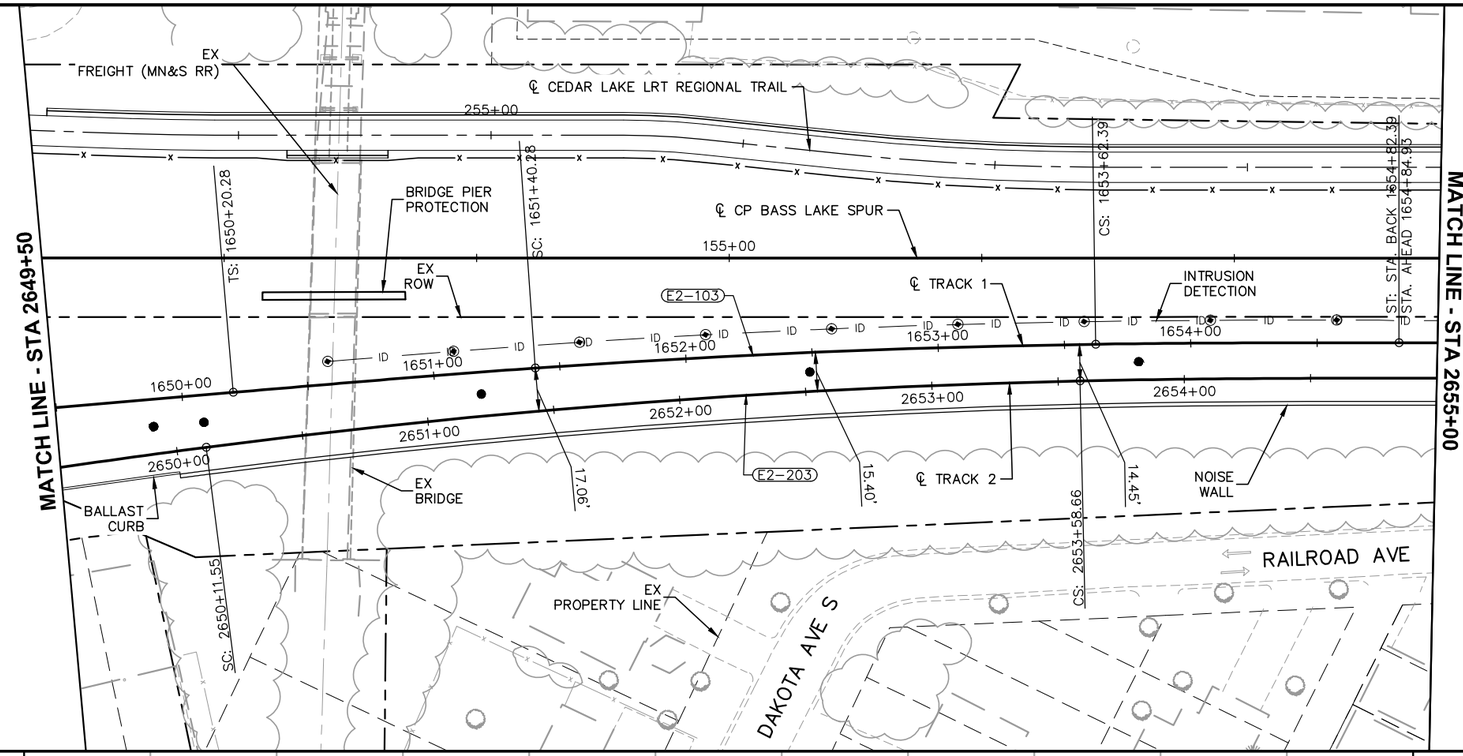

CURVE NO. E2–203
R = 3,270.00'
Lc = 347.12'
Ls = 150.00'
Ea = 2.00"
Eu = 1.66"
V = 55 MPH

CURVE NO. E2–103
R = 4,000.00'
Lc = 222.11'
Ls = 120.00'
Ea = 1.00"
Eu = 1.99"
V = 55 MPH

0 5 10 20
VERTICAL
0 15 30 60
HORIZONTAL
SCALE IN FEET

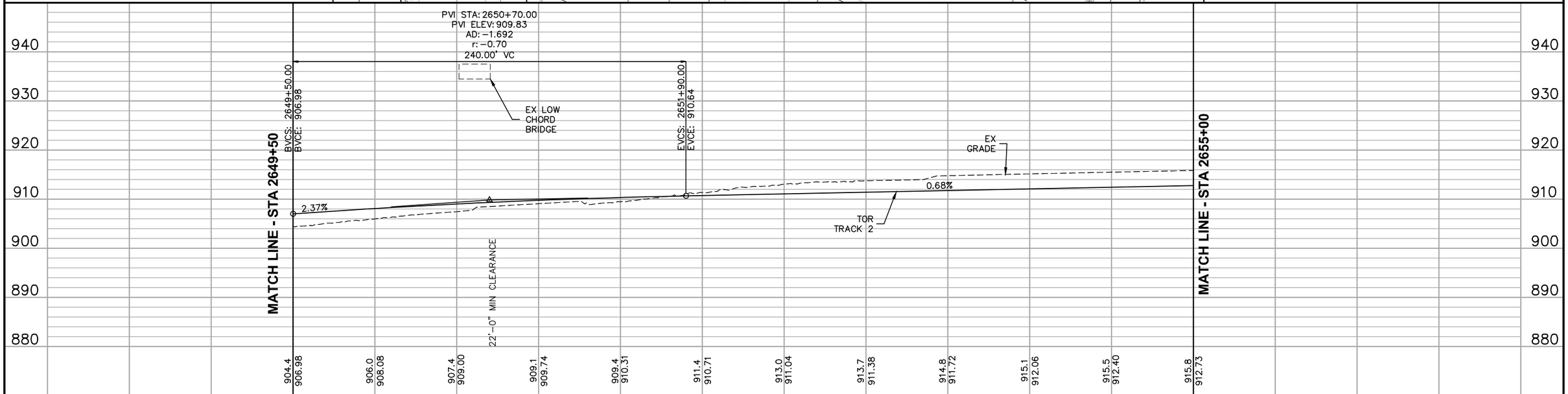

NO.	DATE	BY	CHECK	DESIGN	REVISION / SUBMITTAL

AECOM

90% SUBMISSION - 01/22/16

METROPOLITAN COUNCIL

SOUTHWEST Green Line LRT Extension

CIVIL - VOLUME 3B
TRACK
PLAN AND PROFILE
STA 2649+50 TO STA 2655+00

DISCIPLINE: TRACK

SHEET NAME: E2-TRK-PRF-009

SHEET 258 OF 420

Jan, 18 2016 08:20 am V:\3400_ADC\CAD\00_EAST\PLANSHEETS\TRACK\E2-TRK-PRF.dwg By: V-RasulL

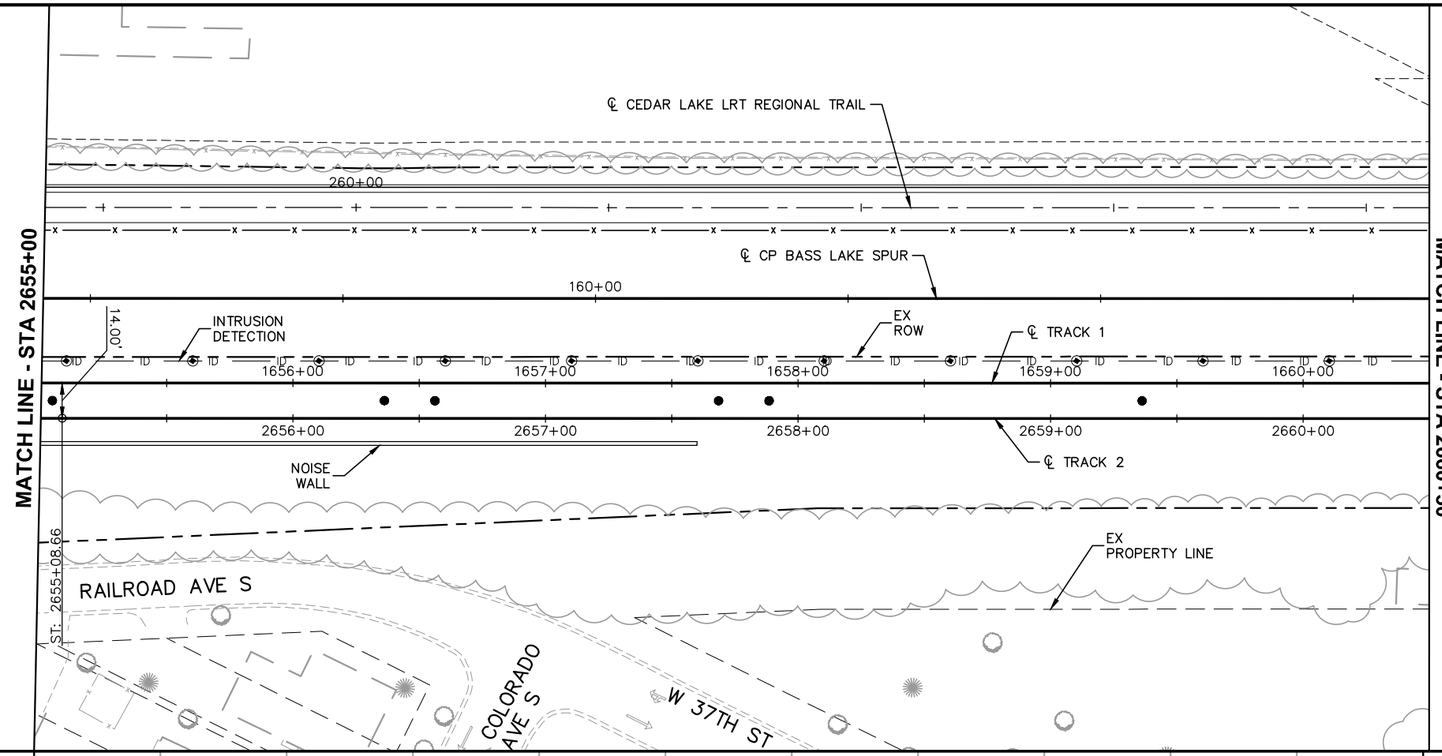

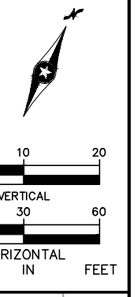

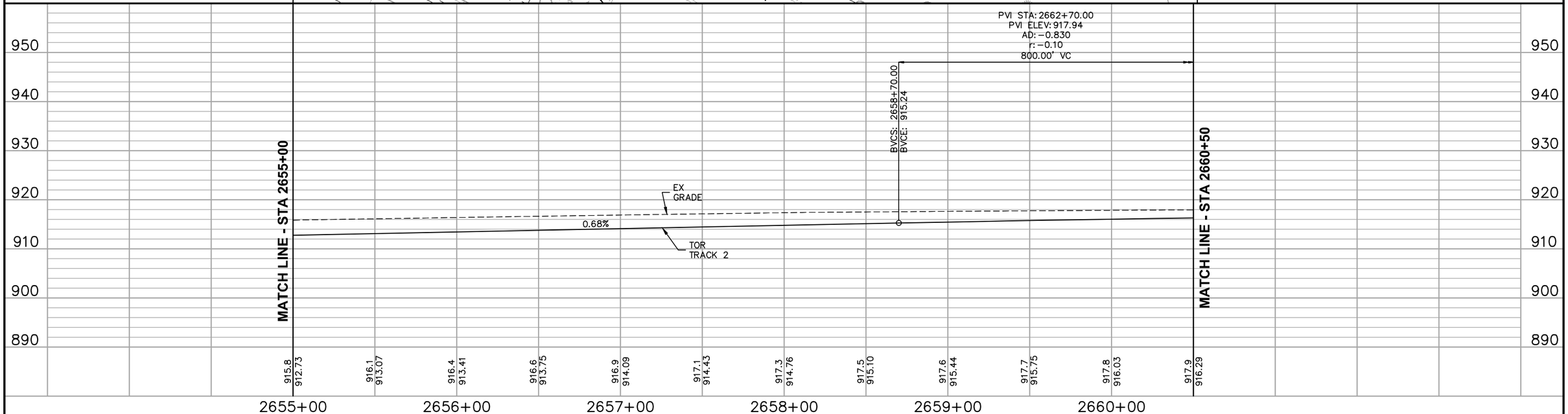

NO.	DATE	BY	CHECK	DESIGN	REVISION / SUBMITTAL

AECOM

90% SUBMISSION - 01/22/16

METROPOLITAN COUNCIL

SOUTHWEST Green Line LRT Extension

CIVIL - VOLUME 3B
TRACK
PLAN AND PROFILE
STA 2655+00 TO STA 2660+50

SHEET 259 OF 420

DISCIPLINE: TRACK

SHEET NAME: E2-TRK-PRF-010

Jan, 18 2016 08:21 am V:\3400_ADC\CAD\00_EAST\PLANSHEETS\TRACK\E2-TRK-PRF.dwg By: V-RasulL

CURVE NO. E2-204
R = 3,000.00'
Lc = 107.08'
Ls = 50.00'
Ea = 1.00"
Eu = 1.11"
V = 40 MPH

CURVE NO. E2-205
R = 3,000.00'
Lc = 107.08'
Ls = 50.00'
Ea = 1.00"
Eu = 1.11"
V = 40 MPH

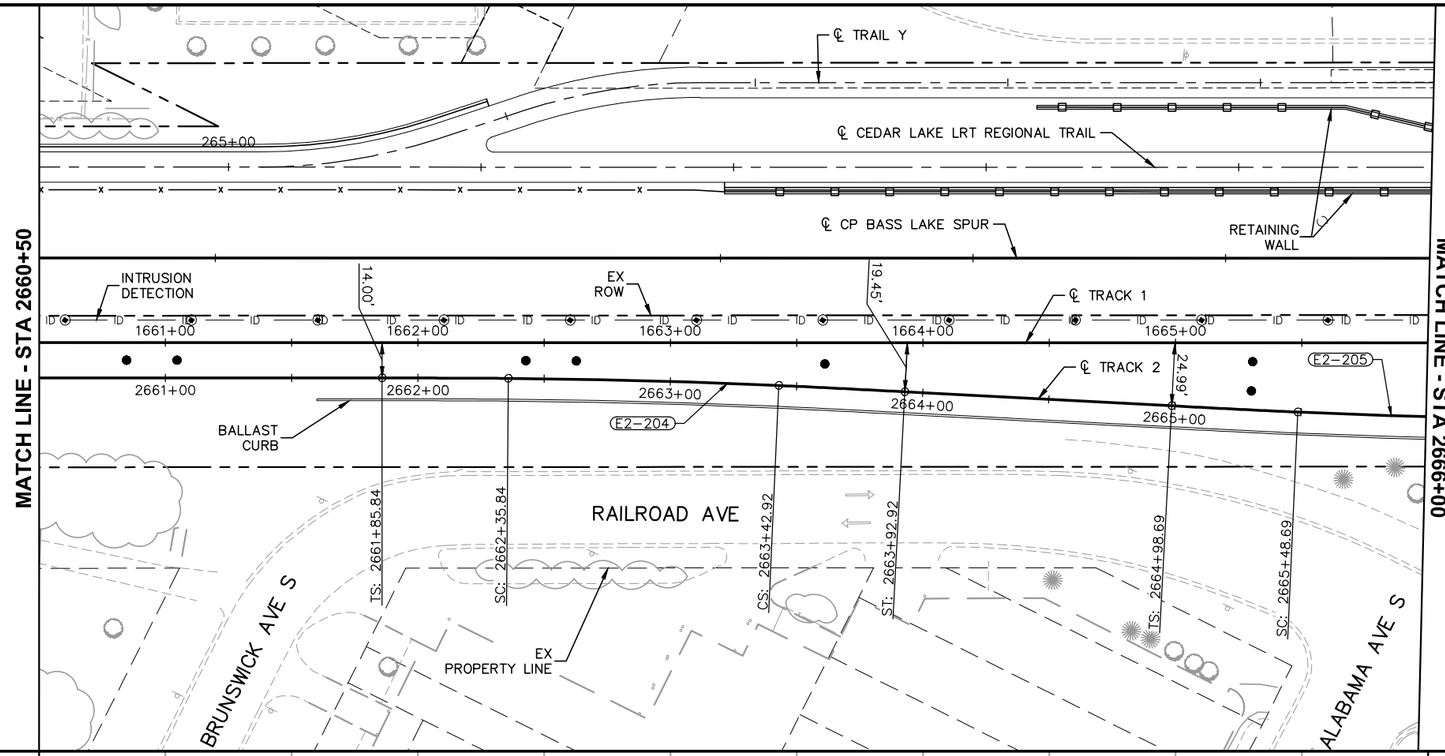

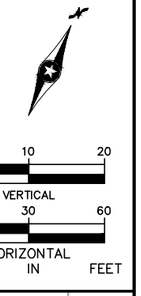

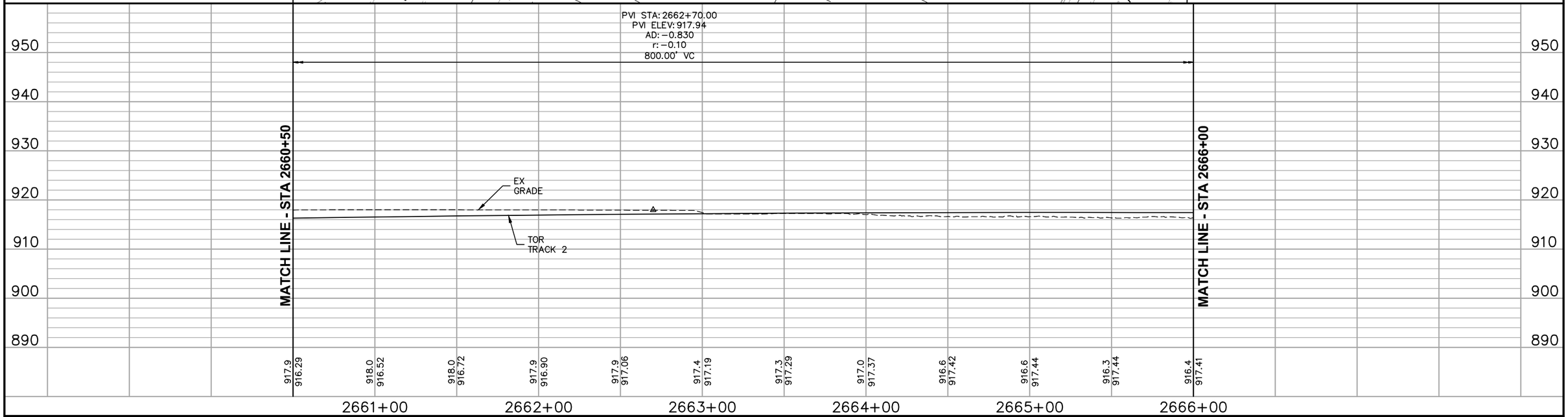

NO.	DATE	BY	CHECK	DESIGN	REVISION / SUBMITTAL

AECOM

90% SUBMISSION - 01/22/16

METROPOLITAN COUNCIL

SOUTHWEST Green Line LRT Extension

CIVIL - VOLUME 3B
TRACK
PLAN AND PROFILE
STA 2660+50 TO STA 2666+00

DISCIPLINE: TRACK

SHEET NAME: E2-TRK-PRF-011

SHEET 260 OF 420

Jan, 18 2016 08:23 am V:\3400_ADC\CAD\00_EAST\PLANSHEETS\TRACK\E2-TRK-PRF.dwg By: V-RasulL

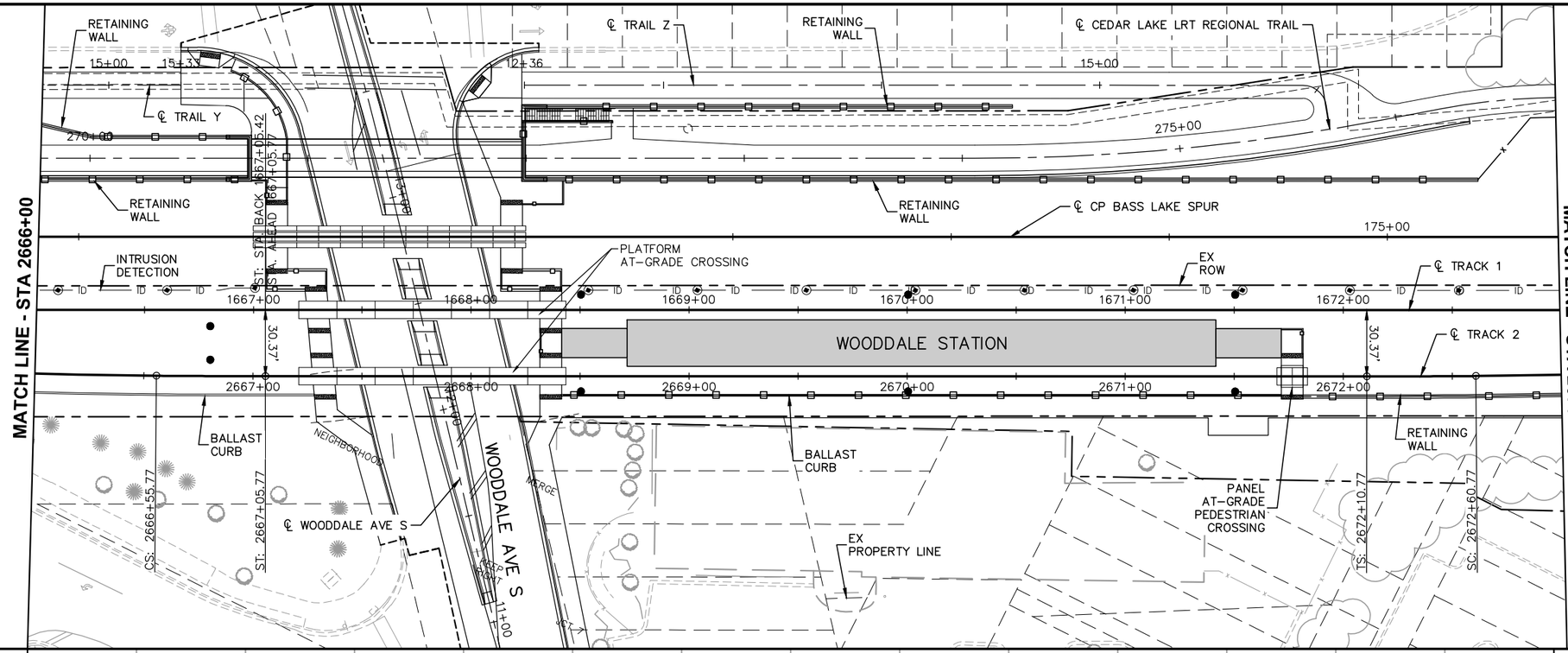

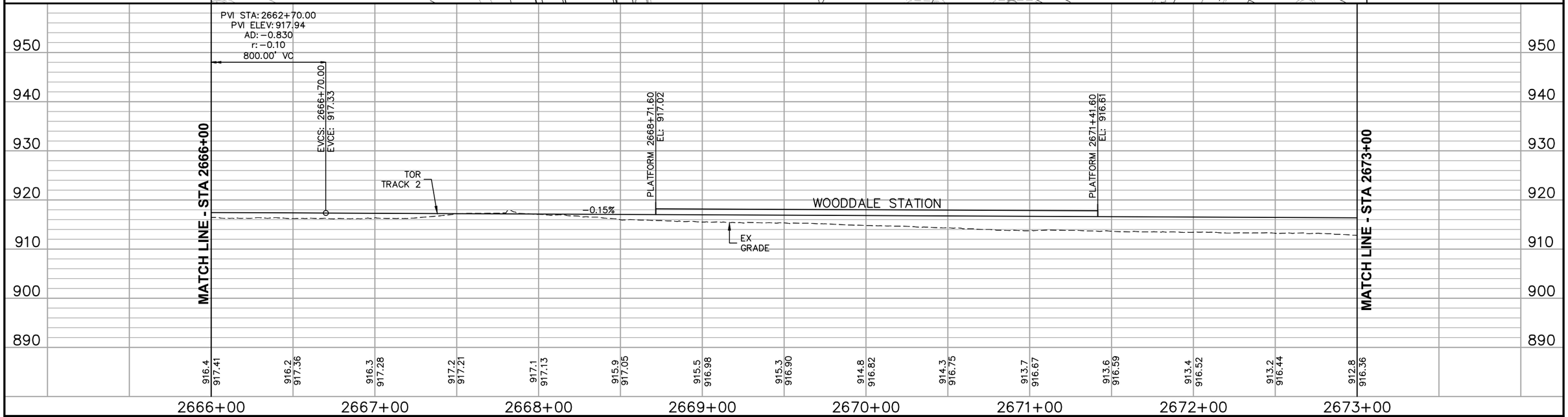

NO.	DATE	BY	CHECK	DESIGN	REVISION / SUBMITTAL

AECOM

90% SUBMISSION - 01/22/16

METROPOLITAN COUNCIL

SOUTHWEST Green Line LRT Extension

CIVIL - VOLUME 3B
TRACK
PLAN AND PROFILE
STA 2666+00 TO STA 2673+00

DISCIPLINE: TRACK

SHEET NAME: E2-TRK-PRF-012

SHEET 261 OF 420

Jan, 18 2016 08:24 am V:\3400_ADC\CAD\00_EAST\PLANSHEETS\TRACK\E2-TRK-PRF.dwg By: V-RasulL

CURVE NO. E2-206
R = 3,000.00'
Lc = 107.08'
Ls = 50'
Ea = 1.00"
Eu = 1.11"
V = 40 MPH

CURVE NO. E2-207
R = 3,000.00'
Lc = 107.08'
Ls = 50.00'
Ea = 1.00"
Eu = 1.11"
V = 40 MPH

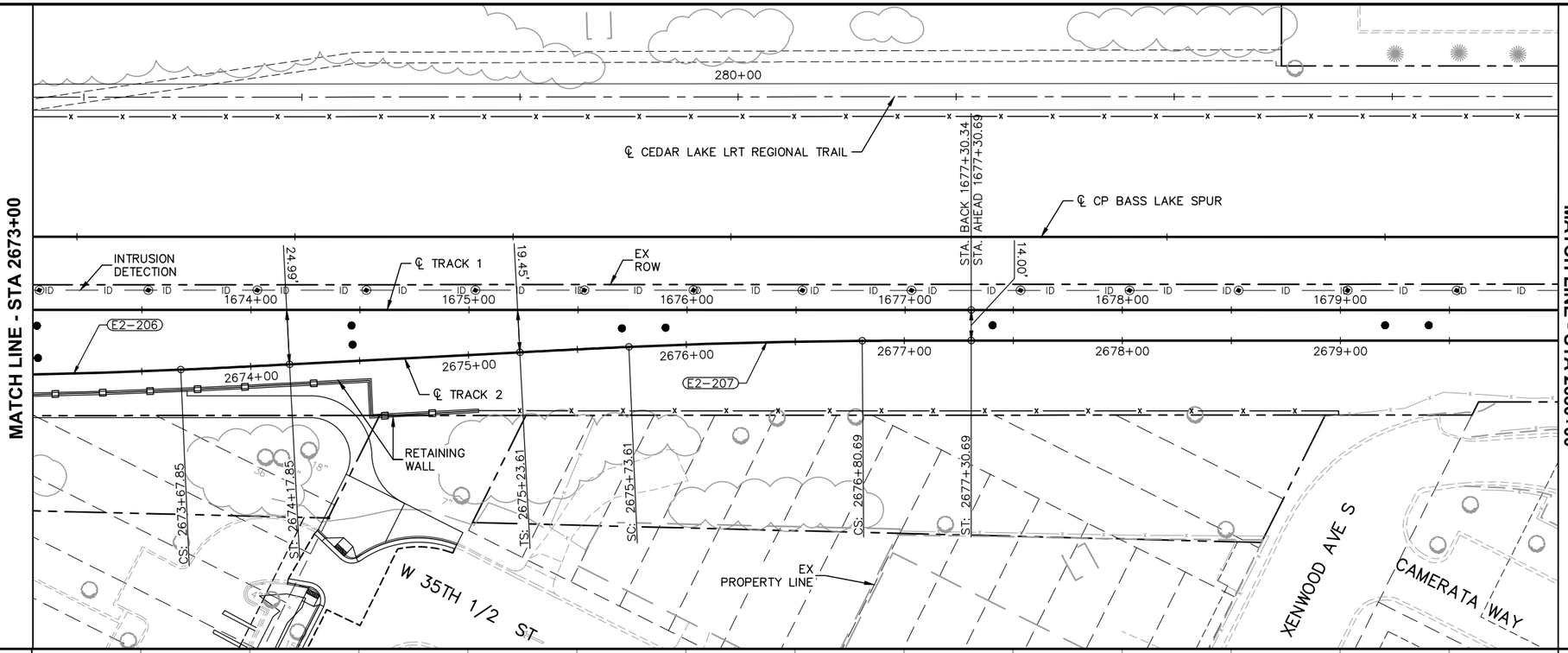

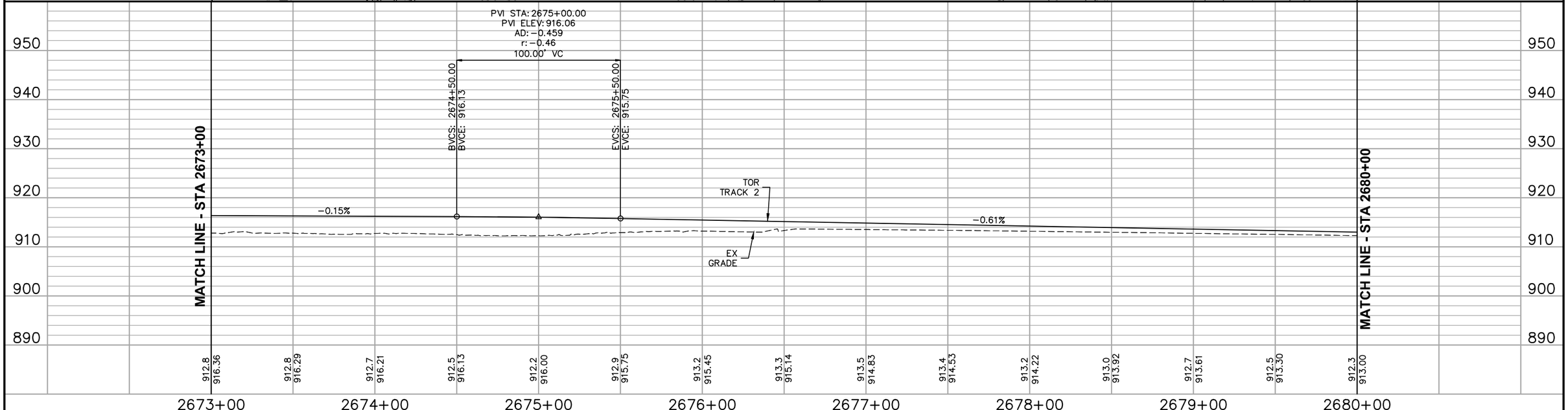

NO.	DATE	BY	CHECK	DESIGN	REVISION / SUBMITTAL

AECOM

90% SUBMISSION - 01/22/16

METROPOLITAN COUNCIL

SOUTHWEST Green Line LRT Extension

CIVIL - VOLUME 3B
TRACK
PLAN AND PROFILE
STA 2673+00 TO STA 2680+00

SHEET 262 OF 420

DISCIPLINE: TRACK

SHEET NAME: E2-TRK-PRF-013

Jan, 18 2016 08:25 am V:\3400_ADC\CAD\00_EAST\PLANSHEETS\TRACK\E2-TRK-PRF.dwg By: V-RasulL

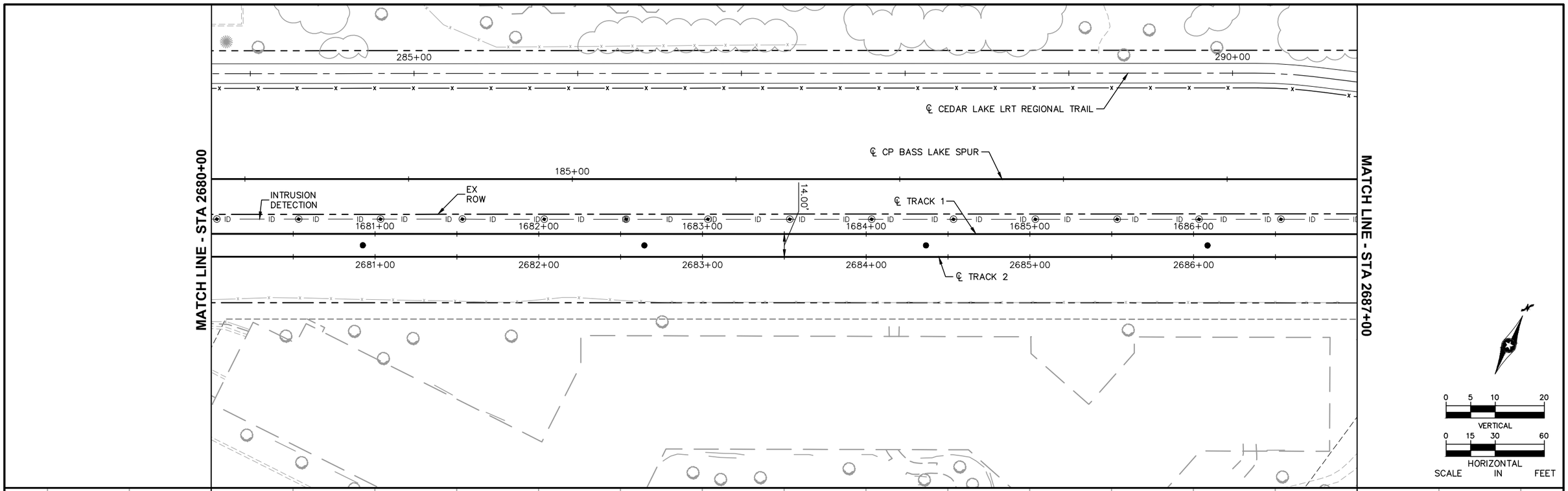

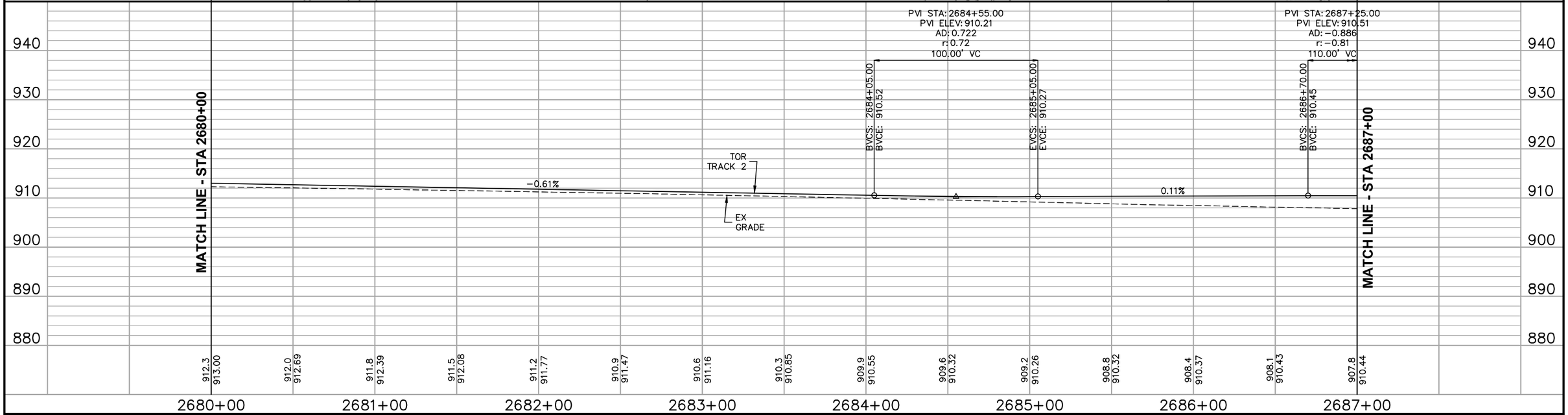

NO.	DATE	BY	CHECK	DESIGN	REVISION / SUBMITTAL

AECOM

90% SUBMISSION - 01/22/16

METROPOLITAN COUNCIL

SOUTHWEST Green Line LRT Extension

CIVIL - VOLUME 3B
TRACK
PLAN AND PROFILE
STA 2680+00 TO STA 2687+00

DISCIPLINE: TRACK

SHEET NAME: E2-TRK-PRF-014

SHEET 263 OF 420

Jan, 18 2016 08:27 am V:\3400_ADC\CAD\00_EAST\PLANSHEETS\TRACK\E2-TRK-PRF.dwg By: V-RasulL

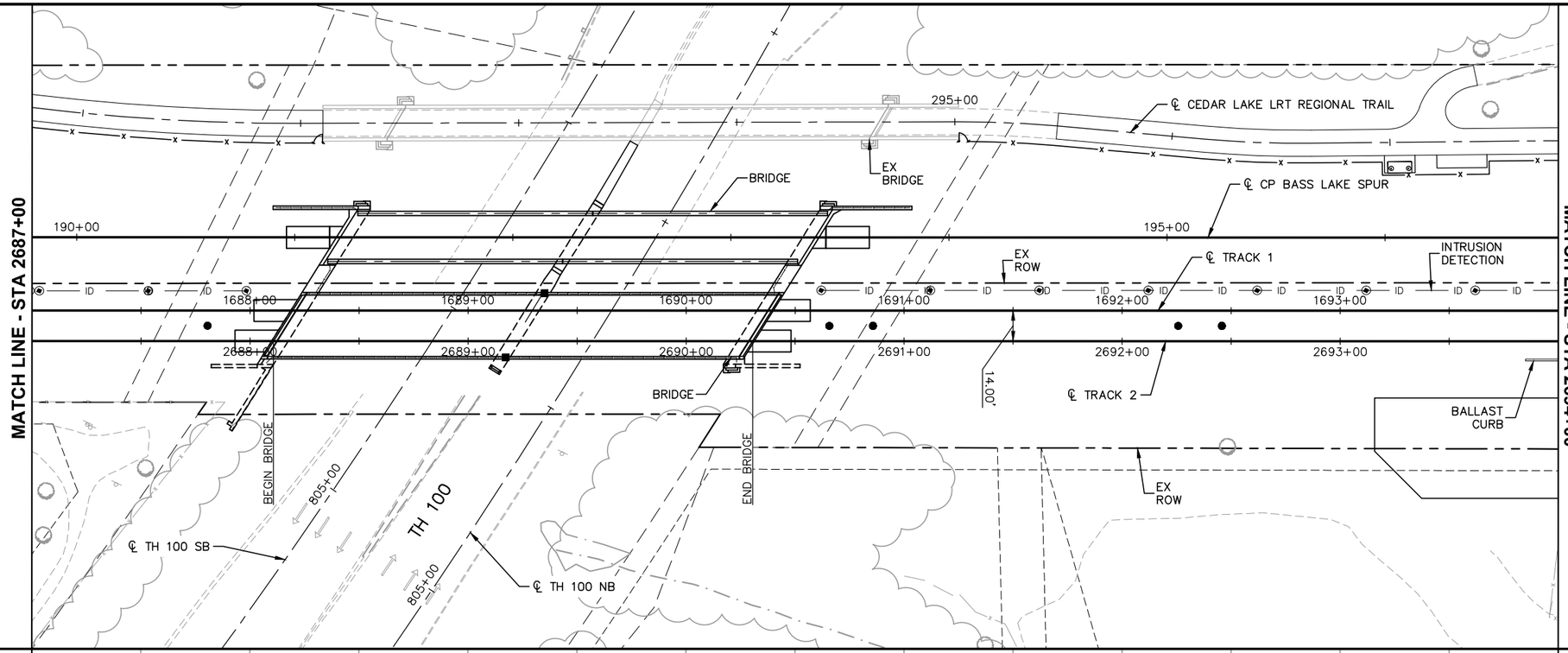

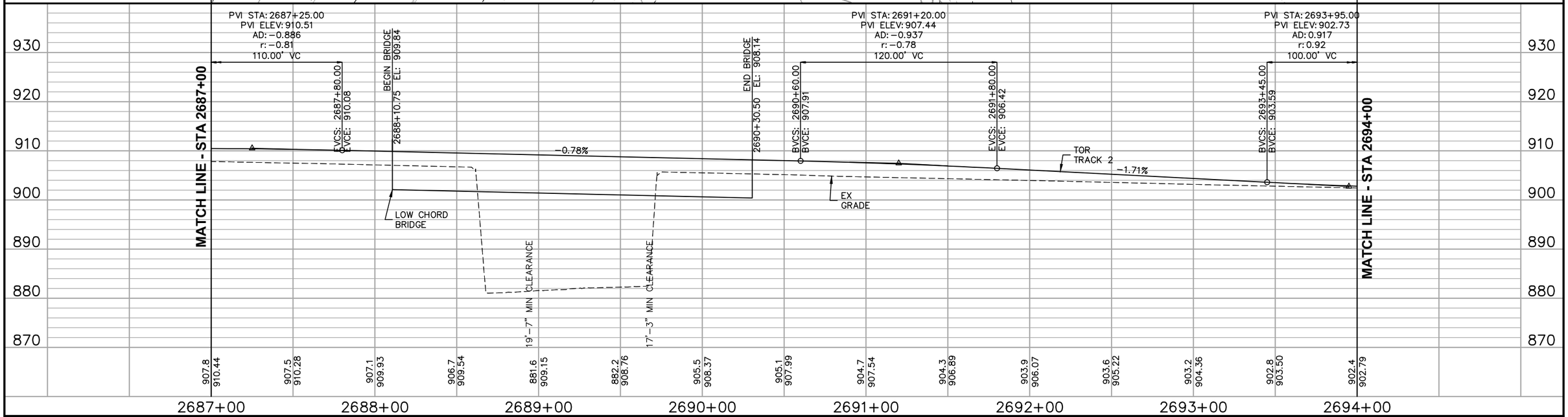

NO.	DATE	BY	CHECK	DESIGN	REVISION / SUBMITTAL

AECOM

90% SUBMISSION - 01/22/16

METROPOLITAN COUNCIL

SOUTHWEST Green Line LRT Extension

CIVIL - VOLUME 3B
TRACK
PLAN AND PROFILE
STA 2687+00 TO STA 2694+00

DISCIPLINE: TRACK

SHEET NAME: E2-TRK-PRF-015

SHEET 264 OF 420

Jan, 18 2016 08:28 am V:\3400_ADC\CAD\00_EAST\PLANSHEETS\TRACK\E2-TRK-PRF.dwg By: V-RasulL

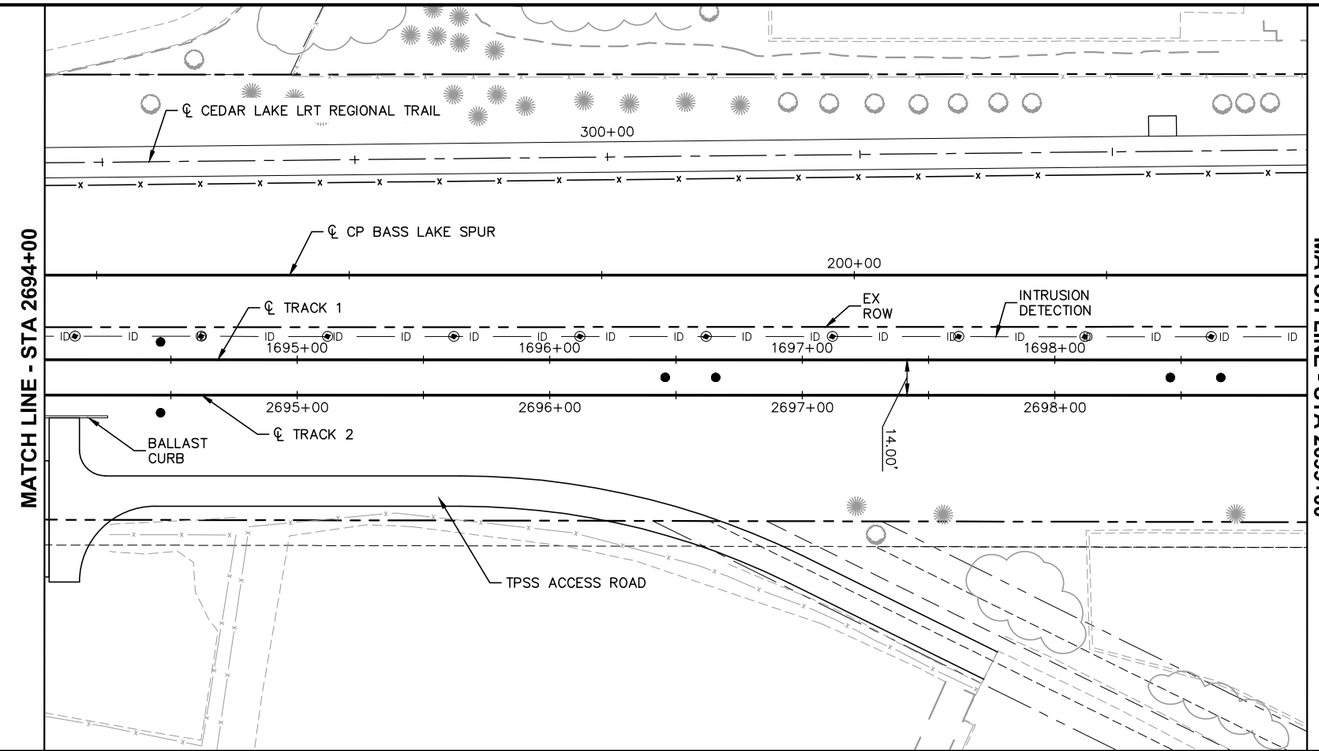

0 5 10 20
VERTICAL
0 15 30 60
HORIZONTAL
SCALE IN FEET

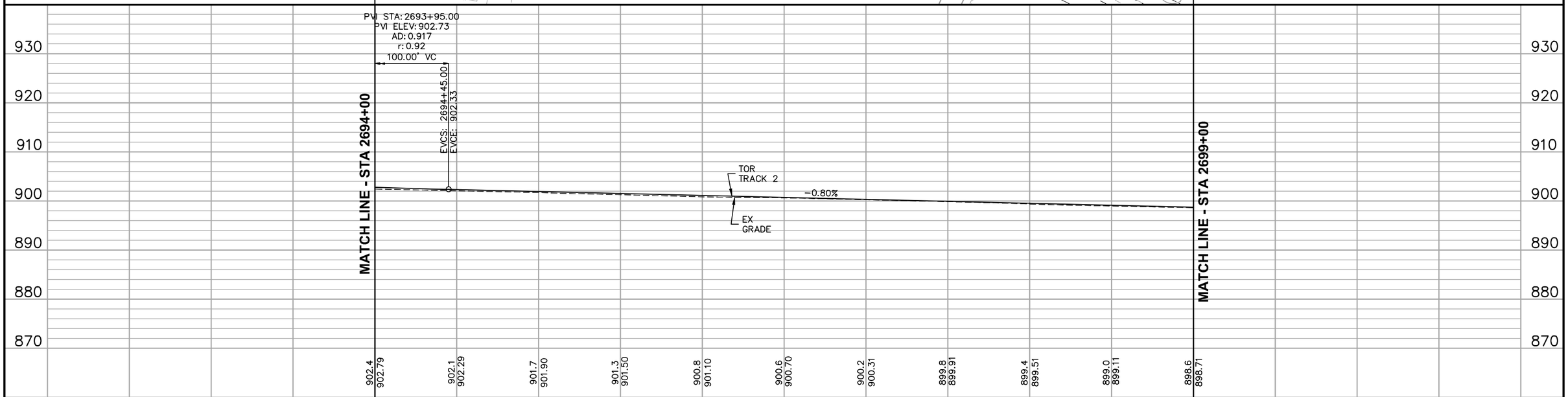

NO.	DATE	BY	CHECK	DESIGN	REVISION / SUBMITTAL

AECOM

90% SUBMISSION - 01/22/16

METROPOLITAN COUNCIL

SOUTHWEST Green Line LRT Extension

CIVIL - VOLUME 3B
TRACK
PLAN AND PROFILE
STA 2694+00 TO STA 2699+00

DISCIPLINE: TRACK

SHEET NAME: E2-TRK-PRF-016

SHEET 265 OF 420

Jan, 18 2016 08:30 am V:\3400_ADC\CAD\00_EAST\PLANSHEETS\TRACK\E2-TRK-PRF.dwg By: V-RosulL

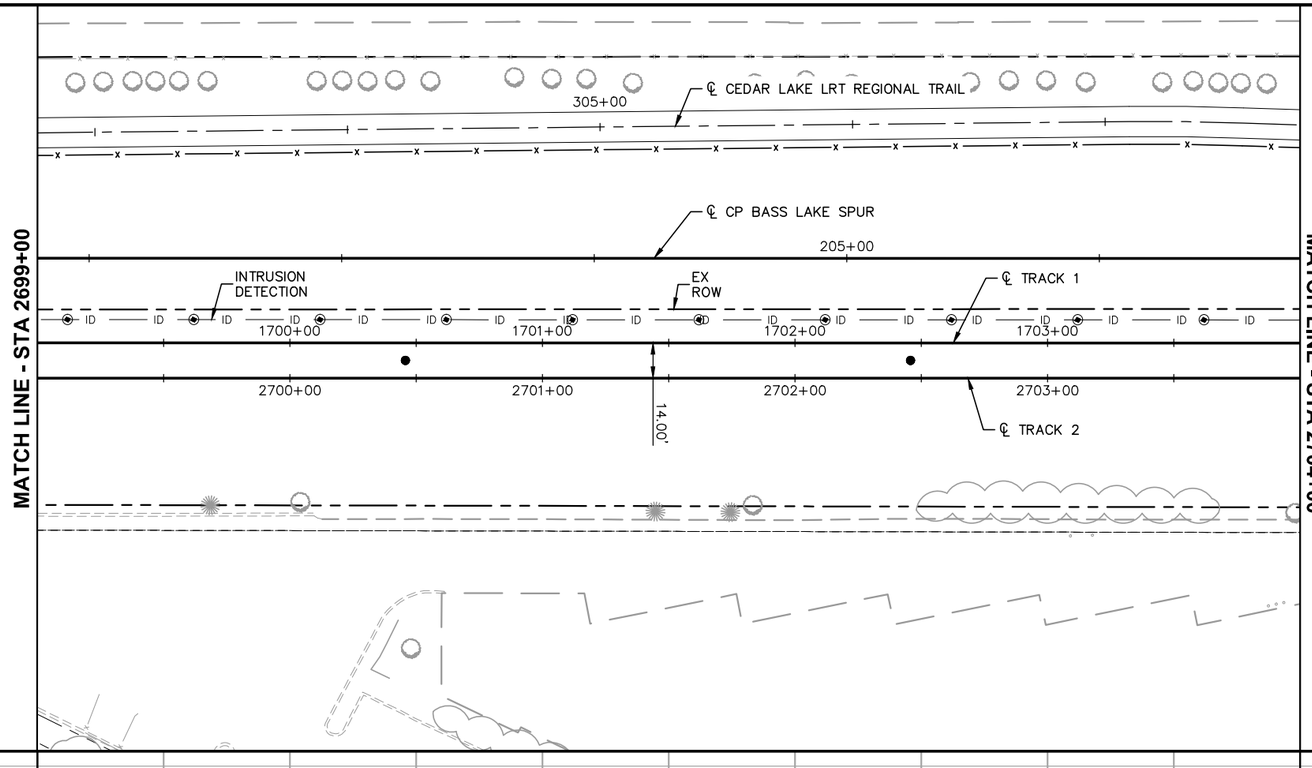

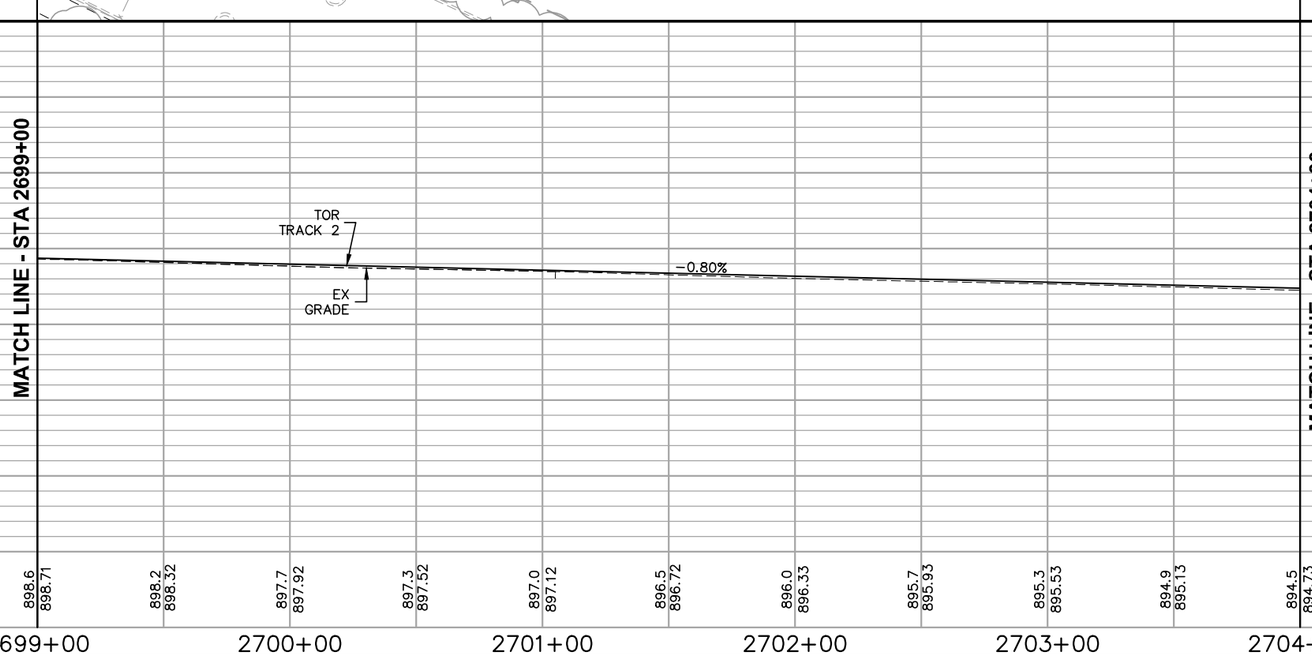

0 5 10 20
VERTICAL
0 15 30 60
HORIZONTAL
SCALE IN FEET

NO.	DATE	BY	CHECK	DESIGN	REVISION / SUBMITTAL

AECOM

90% SUBMISSION - 01/22/16

METROPOLITAN COUNCIL

SOUTHWEST Green Line LRT Extension

CIVIL - VOLUME 3B
TRACK
PLAN AND PROFILE
STA 2699+00 TO STA 2704+00

DISCIPLINE: TRACK

SHEET NAME: E2-TRK-PRF-017

SHEET 266 OF 420

Jan. 18 2016 08:31 am V:\3400_ADC\CAD\00_EAST\PLANSHEETS\TRACK\E2-TRK-PRF.dwg By: V-RasulL

CURVE NO. E2-208
R = 3,000.00'
Lc = 107.08'
Ls = 50.00'
Ea = 1.00"
Eu = 1.11"
V = 40 MPH

CURVE NO. E2-209
R = 3,000.00'
Lc = 107.08'
Ls = 50.00'
Ea = 1.00"
Eu = 1.11"
V = 40 MPH

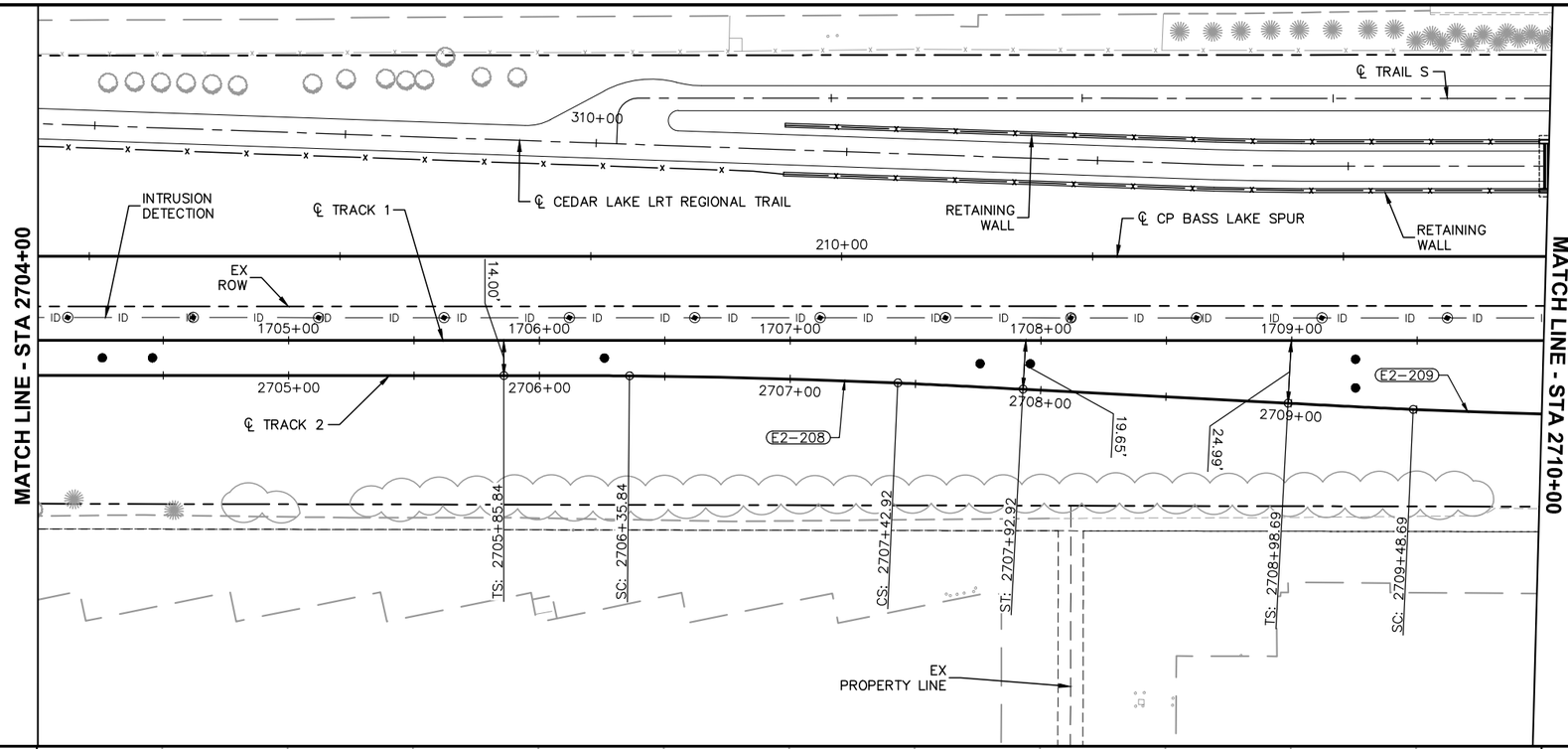

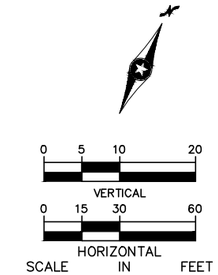

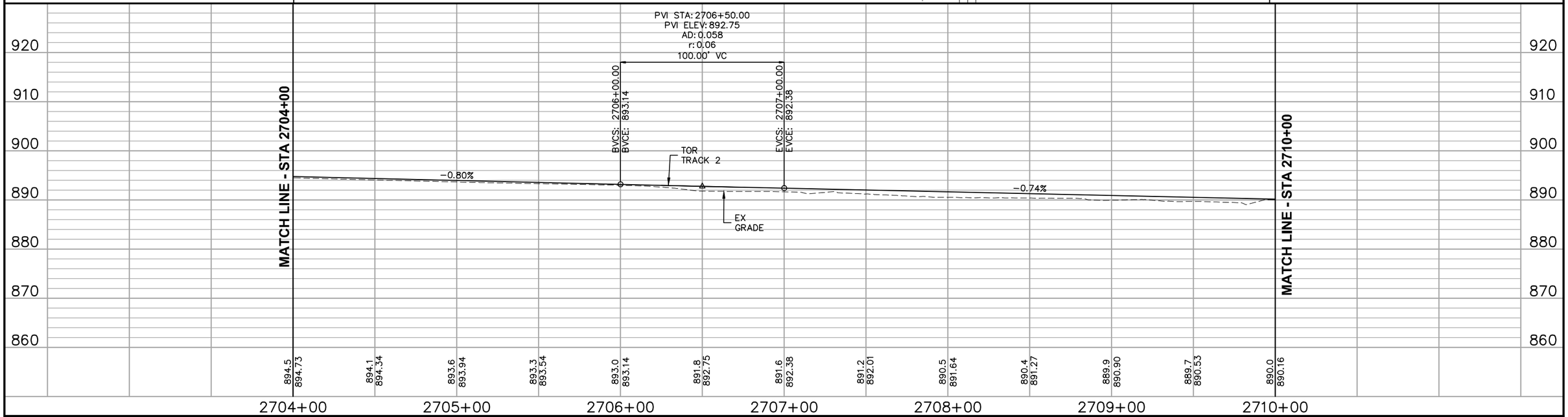

NO.	DATE	BY	CHECK	DESIGN	REVISION / SUBMITTAL

AECOM

90% SUBMISSION - 01/22/16

METROPOLITAN COUNCIL

SOUTHWEST Green Line LRT Extension

CIVIL - VOLUME 3B
TRACK
PLAN AND PROFILE
STA 2704+00 TO STA 2710+00

DISCIPLINE: TRACK

SHEET NAME: E2-TRK-PRF-018

SHEET 267 OF 420

Jan, 18 2016 08:33 am V:\3400_ADC\CAD\00_EAST\PLANSHEETS\TRACK\E2-TRK-PRF.dwg By: V-RosulL

CURVE NO. E2-110
R = 3,000.00'
Lc = 159.84'
Ls = 50.00'
Ea = 1.00"
Eu = 1.11"
V = 40 MPH

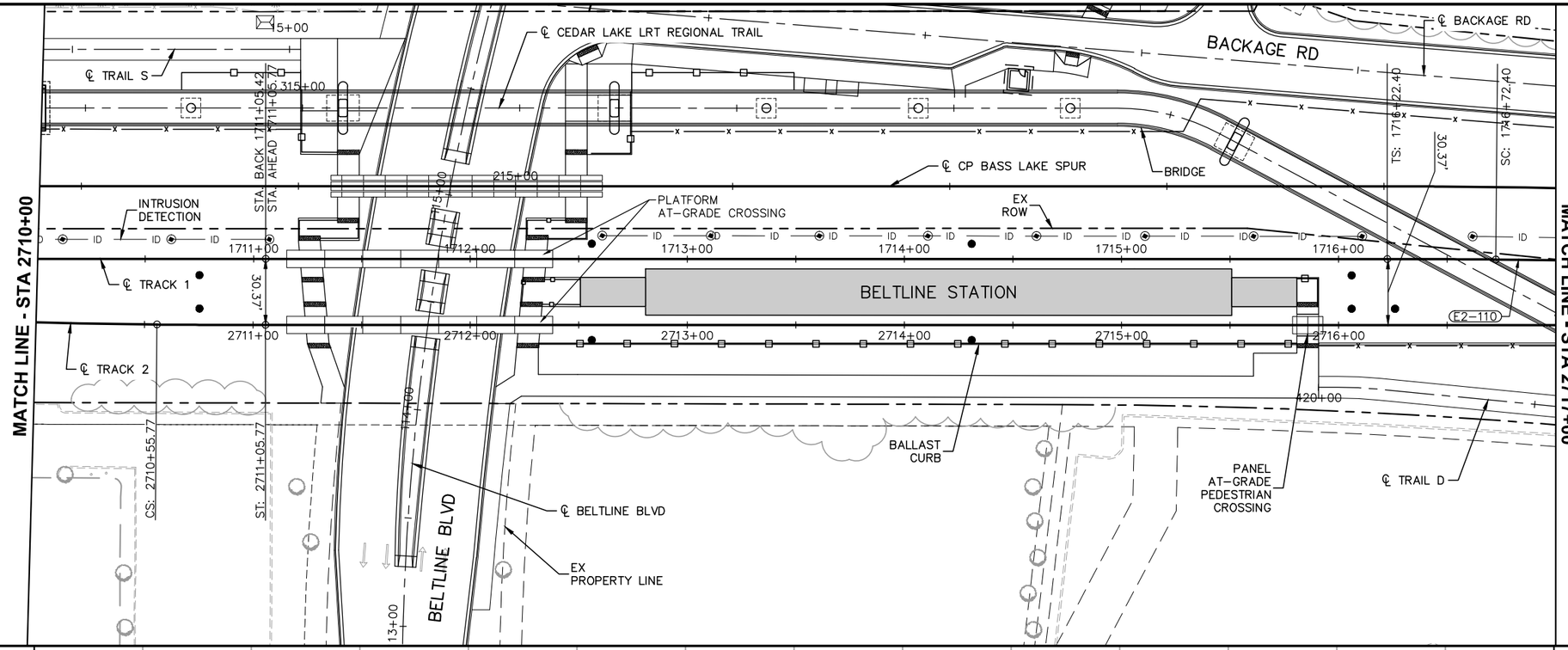

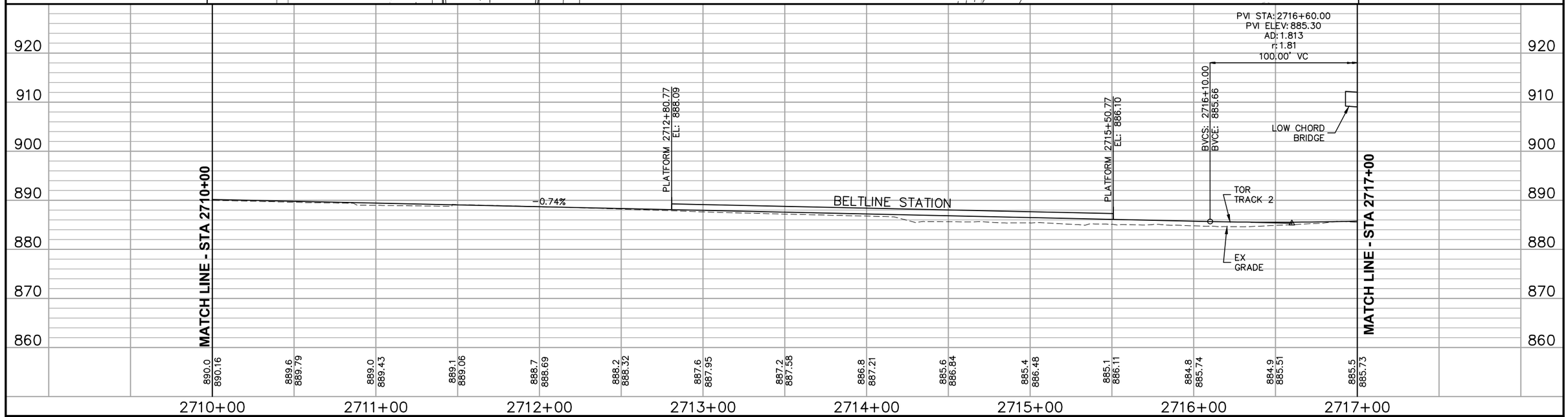

0 5 10 20
VERTICAL
0 15 30 60
HORIZONTAL
SCALE IN FEET

NO.	DATE	BY	CHECK	DESIGN	REVISION / SUBMITTAL

AECOM

90% SUBMISSION - 01/22/16

METROPOLITAN COUNCIL

SOUTHWEST Green Line LRT Extension

CIVIL - VOLUME 3B
TRACK
PLAN AND PROFILE
STA 2710+00 TO STA 2717+00

DISCIPLINE: TRACK

SHEET NAME: E2-TRK-PRF-019

SHEET 268 OF 420

Jan, 18 2016 08:34 am V:\3400_ADC\CAD\00_EAST\PLANSHEETS\TRACK\E2-TRK-PRF.dwg By: V-RasulL

CURVE NO. E2-210
R = 2,220.00'
Lc = 85.28'
Ls = 70.00'
Ea = 1.25"
Eu = 1.63"
V = 40 MPH

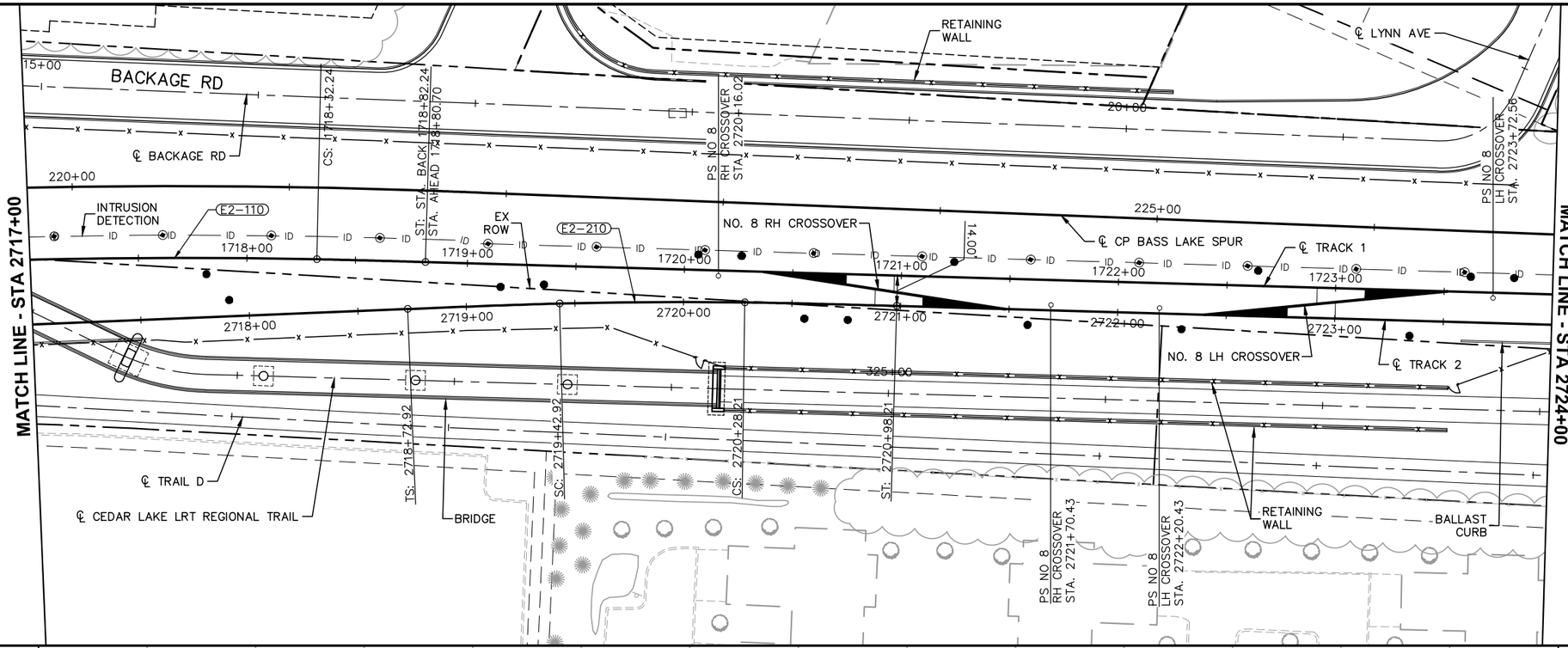

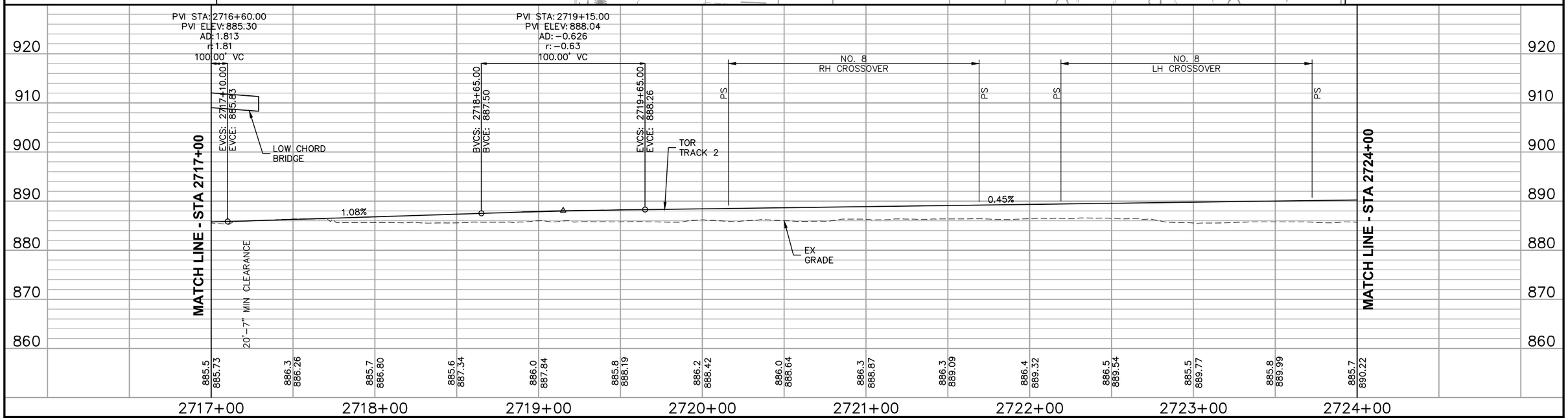

NO.	DATE	BY	CHECK	DESIGN	REVISION / SUBMITTAL

AECOM

90% SUBMISSION - 01/22/16

METROPOLITAN COUNCIL

SOUTHWEST Green Line LRT Extension

CIVIL - VOLUME 3B
TRACK
PLAN AND PROFILE
STA 2717+00 TO STA 2724+00

SHEET 269 OF 420

DISCIPLINE: TRACK

SHEET NAME: E2-TRK-PRF-020

Jan, 18 2016 08:36 am V:\3400_ADC\CAD\00_EAST\PLANSHEETS\TRACK\E2-TRK-PRF.dwg By: V-RasulL

CURVE NO. E2–211
R = 2,800.00'
Lc = 814.09'
Ls = 140.00'
Ea = 2.25"
Eu = 2.03"
V = 55 MPH

CURVE NO. E2–111
R = 2,800.00'
Lc = 814.09'
Ls = 140.00'
Ea = 2.25"
Eu = 2.03"
V = 55 MPH

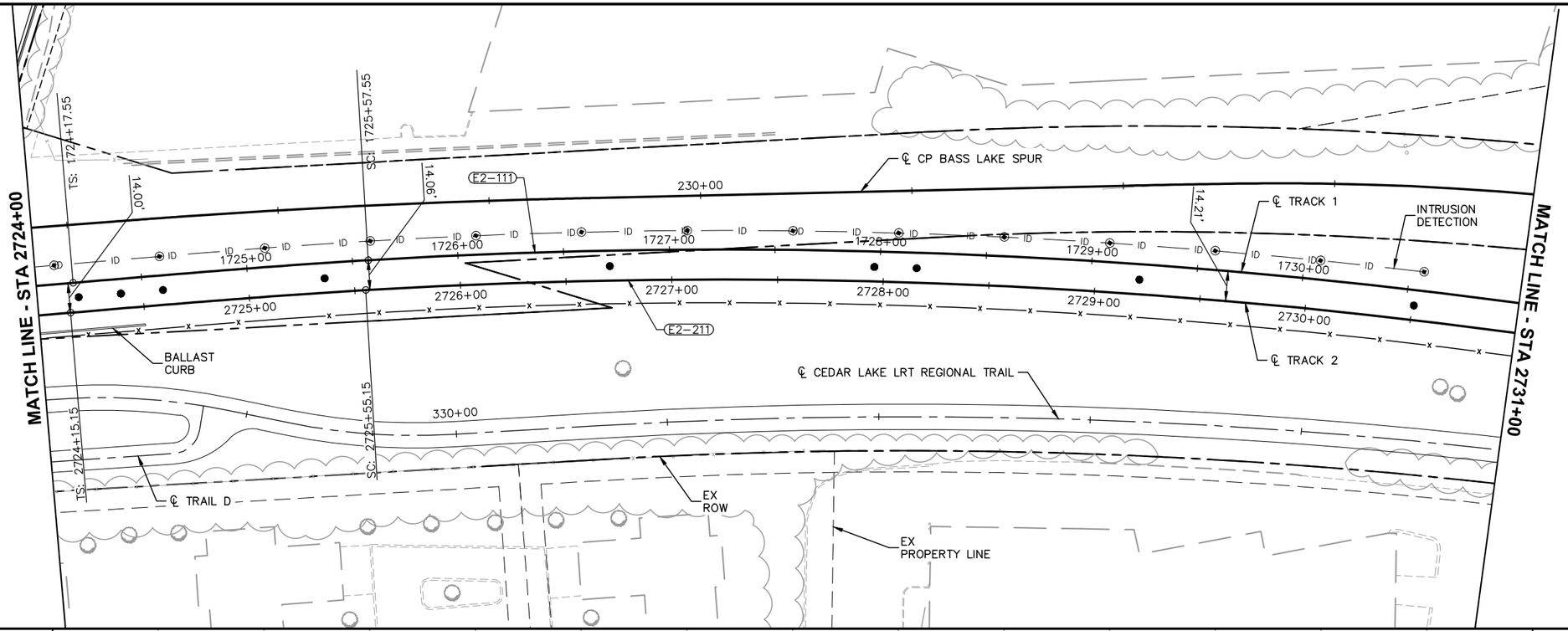

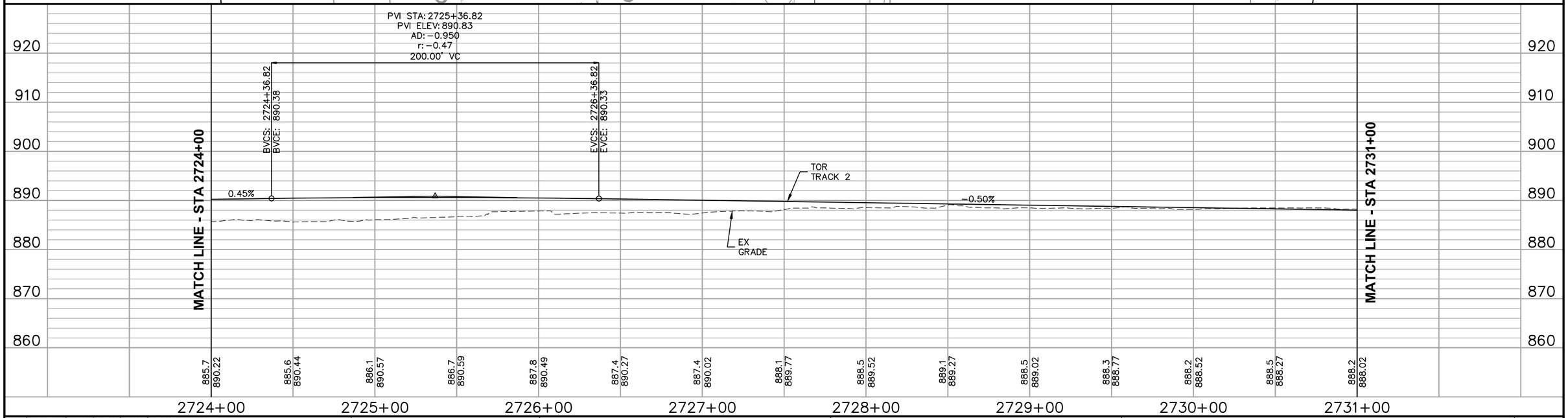

0 5 10 20
VERTICAL
0 15 30 60
HORIZONTAL
SCALE IN FEET

NO.	DATE	BY	CHECK	DESIGN	REVISION / SUBMITTAL

AECOM

90% SUBMISSION - 01/22/16

METROPOLITAN COUNCIL

SOUTHWEST Green Line LRT Extension

CIVIL - VOLUME 3B
TRACK
PLAN AND PROFILE
STA 2724+00 TO STA 2731+00

DISCIPLINE: TRACK

SHEET NAME: E2-TRK-PRF-021

SHEET 270 OF 420

Jan, 18 2016 08:37 am V:\3400_ADC\CAD\00_EAST\PLANSHEETS\TRACK\E2-TRK-PRF.dwg By: V-RasulL

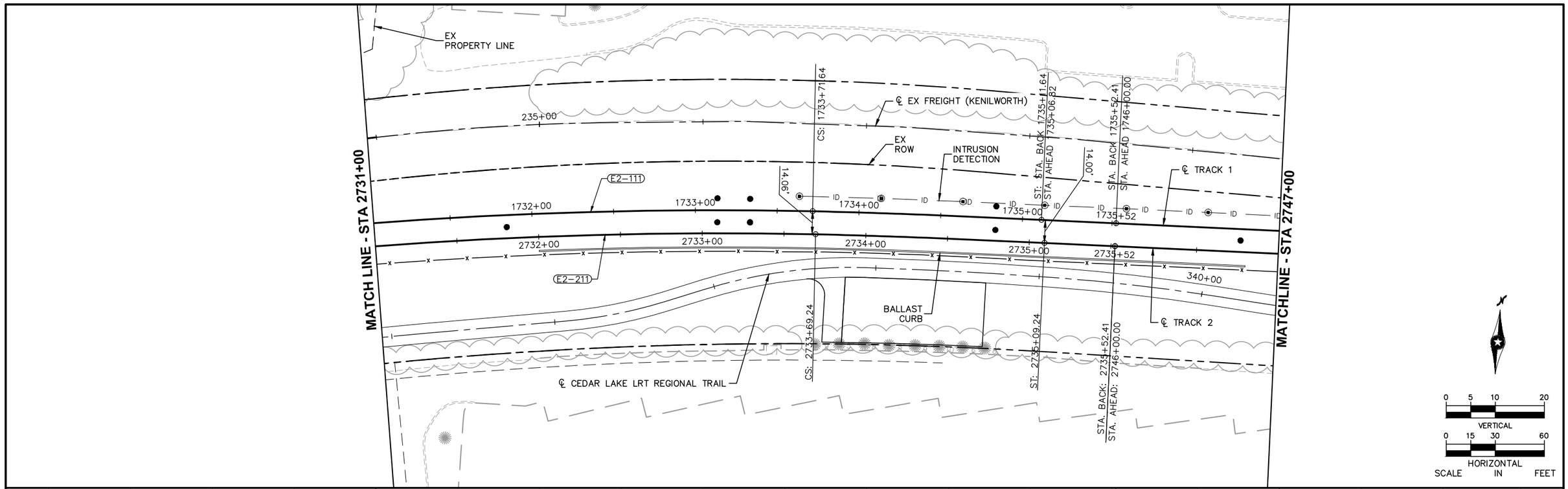

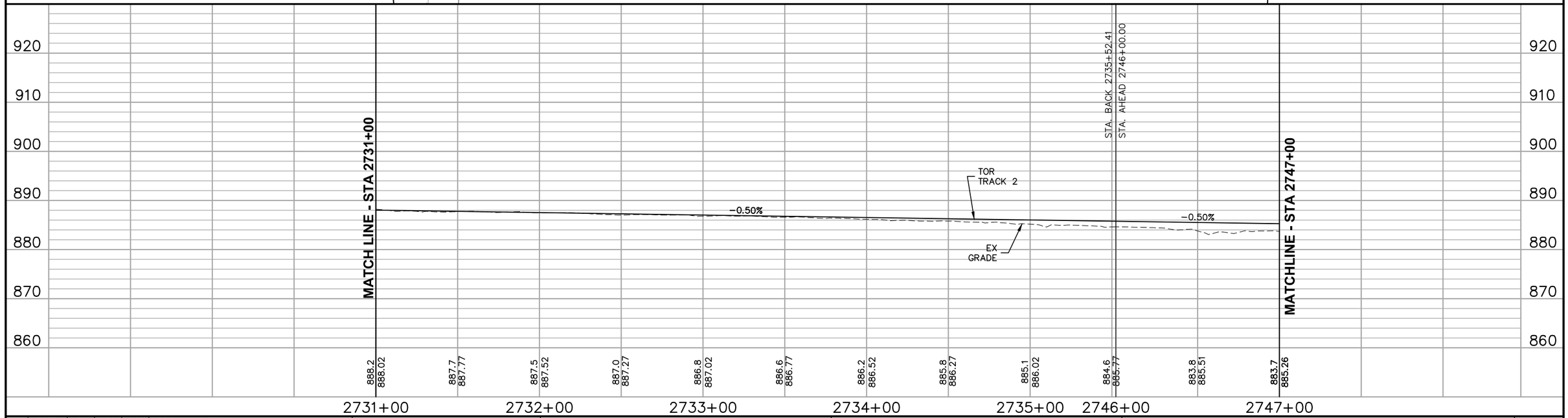

NO.	DATE	BY	CHECK	DESIGN	REVISION / SUBMITTAL

AECOM

90% SUBMISSION - 01/22/16

METROPOLITAN COUNCIL

SOUTHWEST
Green Line LRT Extension

CIVIL - VOLUME 3B
TRACK
PLAN AND PROFILE
STA 2731+00 TO STA 2747+00

DISCIPLINE: TRACK

SHEET NAME: E2-TRK-PRF-022

SHEET 271 OF 420

Jan, 18 2016 08:38 am V:\3400_ADC\CAD\00_EAST\PLANSHEETS\TRACK\E2-TRK-PRF.dwg By: V-RasulL

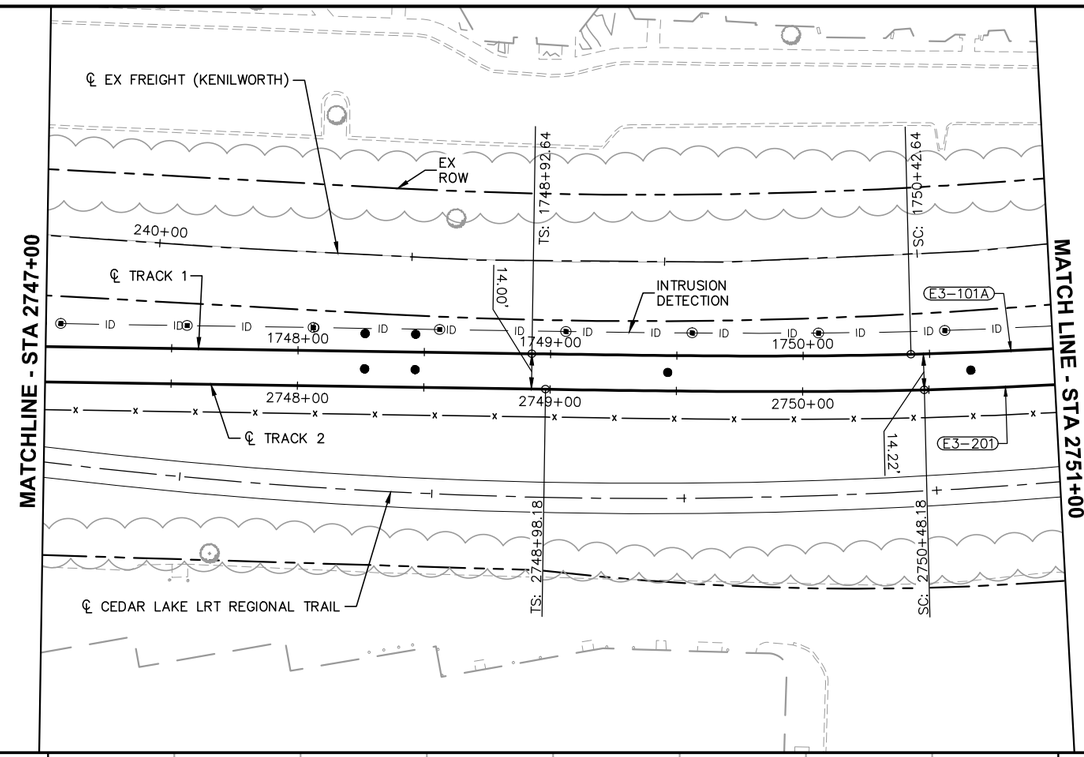

CURVE NO. E3–201
R = 1,880.00'
Lc = 1,301.17'
Ls_1 = 150.00'
Ls_2 = 80.00'
Ea = 1.75"
Eu = 2.52" / 1.62"
V = 45 / 40 MPH

CURVE NO. E3–101A
R = 1,880.00'
Lc = 810.79'
Ls_1 = 150.00'
Ls_2 = 50.00'
Ea = 2.75"
Eu = 2.52"
V = 50 MPH

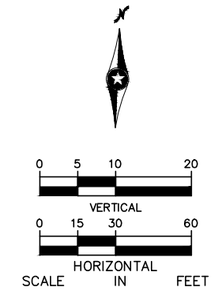

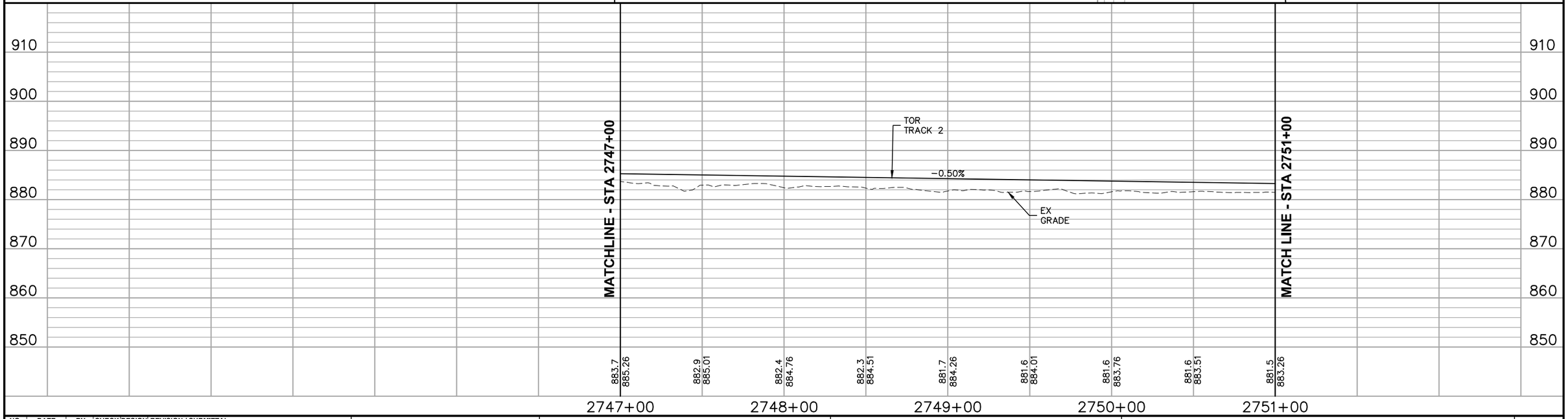

NO.	DATE	BY	CHECK	DESIGN	REVISION / SUBMITTAL

AECOM

90% SUBMISSION - 01/22/16

METROPOLITAN COUNCIL

SOUTHWEST Green Line LRT Extension

CIVIL - VOLUME 3B
TRACK
PLAN AND PROFILE
STA 2747+00 TO STA 2751+00

DISCIPLINE: TRACK

SHEET NAME: E3-TRK-PRF-001

SHEET 272 OF 420

Jan, 18 2016 09:03 am V:\3400_ADC\CAD\00_EAST\PLANSHEETS\TRACK\E3-TRK-PRF.dwg By: V-RasulL

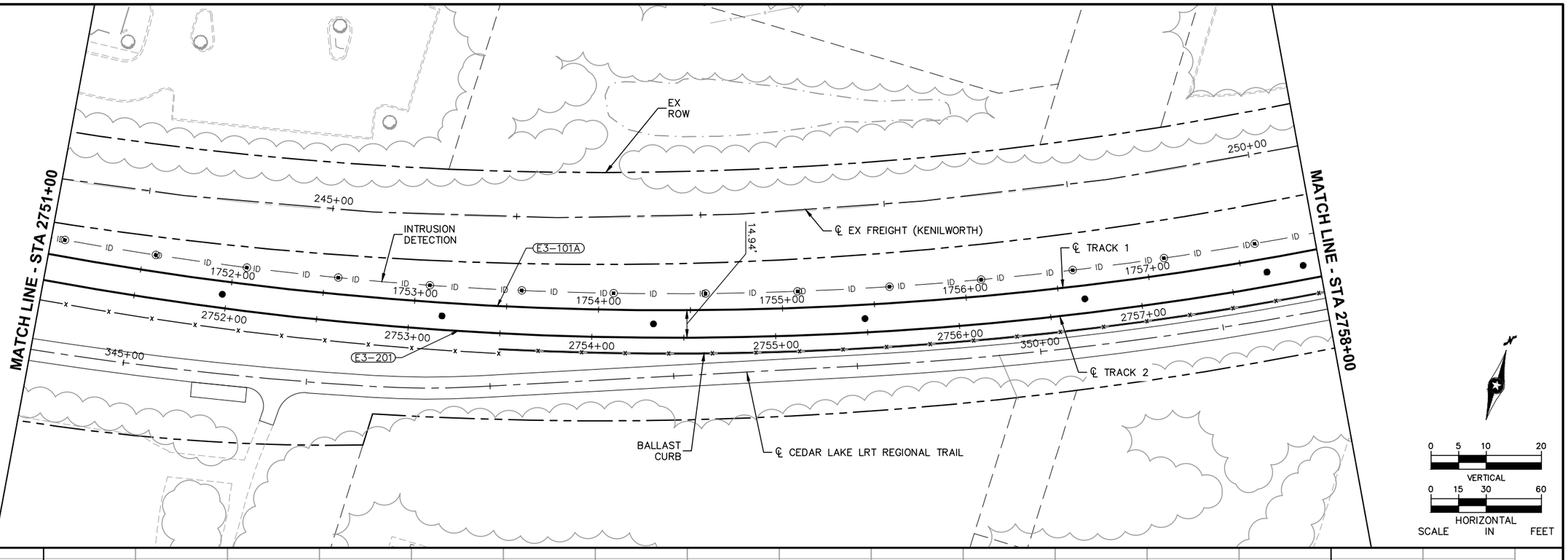

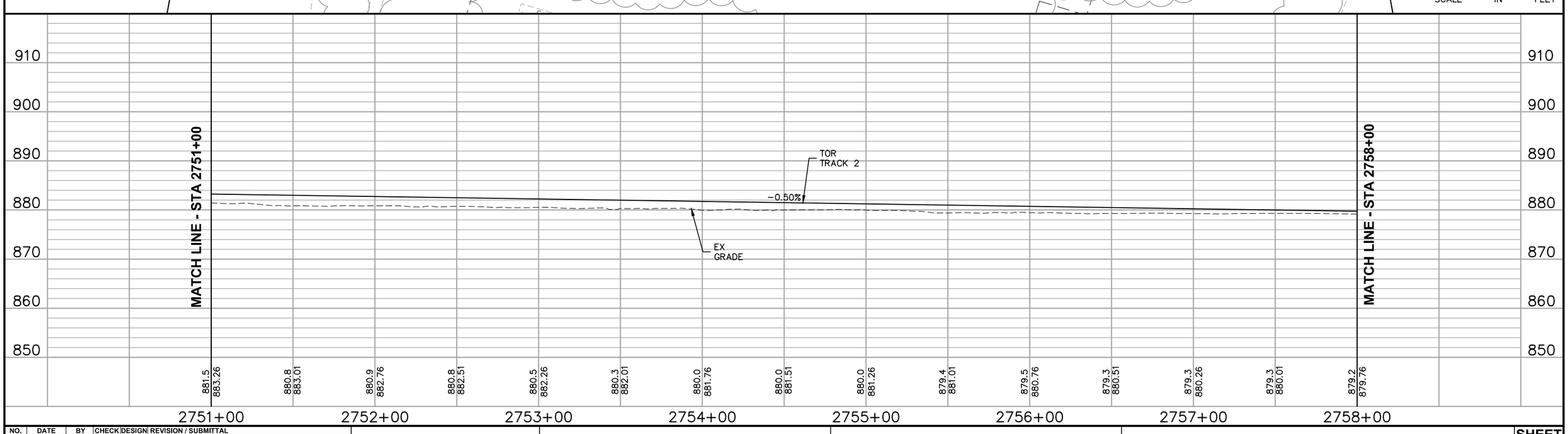

NO.	DATE	BY	CHECK	DESIGN	REVISION / SUBMITTAL

AECOM

90% SUBMISSION - 01/22/16

METROPOLITAN COUNCIL

SOUTHWEST Green Line LRT Extension

CIVIL - VOLUME 3B
TRACK
PLAN AND PROFILE
STA 2751+00 TO STA 2758+00

DISCIPLINE: TRACK

SHEET NAME: E3-TRK-PRF-002

SHEET 273 OF 420

Jan. 18 2016 09:04 am V:\3400_ADC\CAD\00_EAST\PLANSHEETS\TRACK\E3-TRK-PRF.dwg By: V-RasulL

CURVE NO. E3–101B
R = 1,410.00'
Lc = 279.04'
Ls_1 = 50.00'
Ls_2 = 150.00'
Ea = 3.00"
Eu = 2.69"
V = 45 MPH

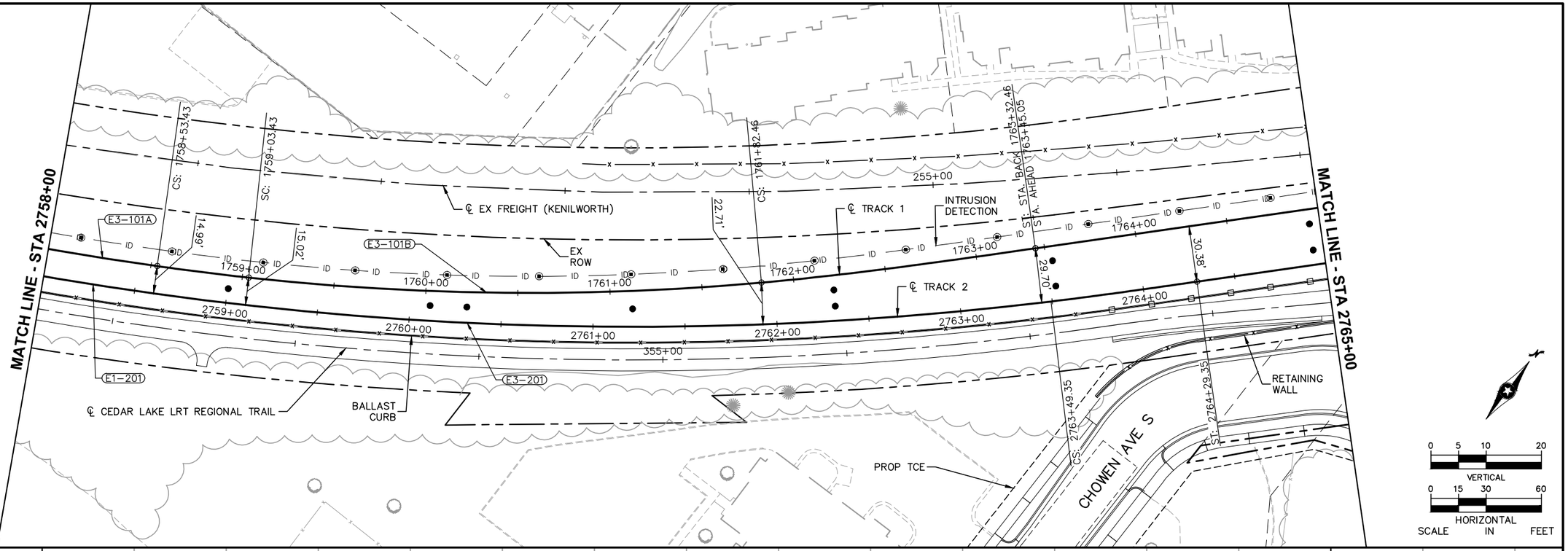

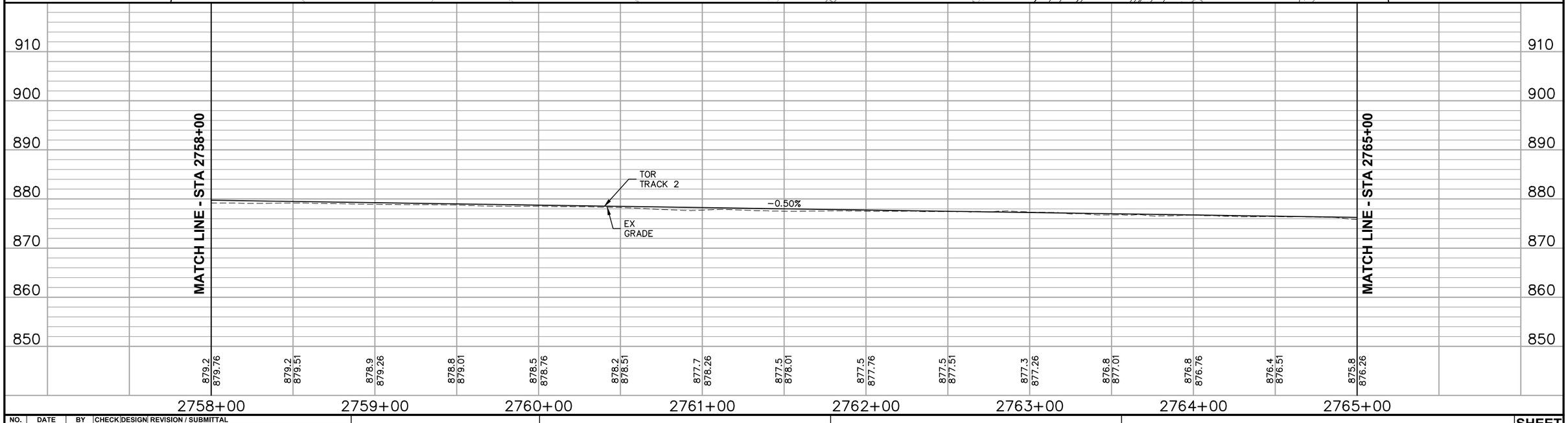

NO.	DATE	BY	CHECK	DESIGN	REVISION / SUBMITTAL

AECOM

90% SUBMISSION - 01/22/16

METROPOLITAN COUNCIL

SOUTHWEST Green Line LRT Extension

CIVIL - VOLUME 3B
TRACK
PLAN AND PROFILE
STA 2758+00 TO STA 2765+00

DISCIPLINE: TRACK

SHEET NAME: E3-TRK-PRF-003

SHEET 274 OF 420

Jan. 18 2016 09:04 am V:\3400_ADC\CAD\00_EAST\PLANSHEETS\TRACK\E3-TRK-PRF.dwg By: V-RasulL

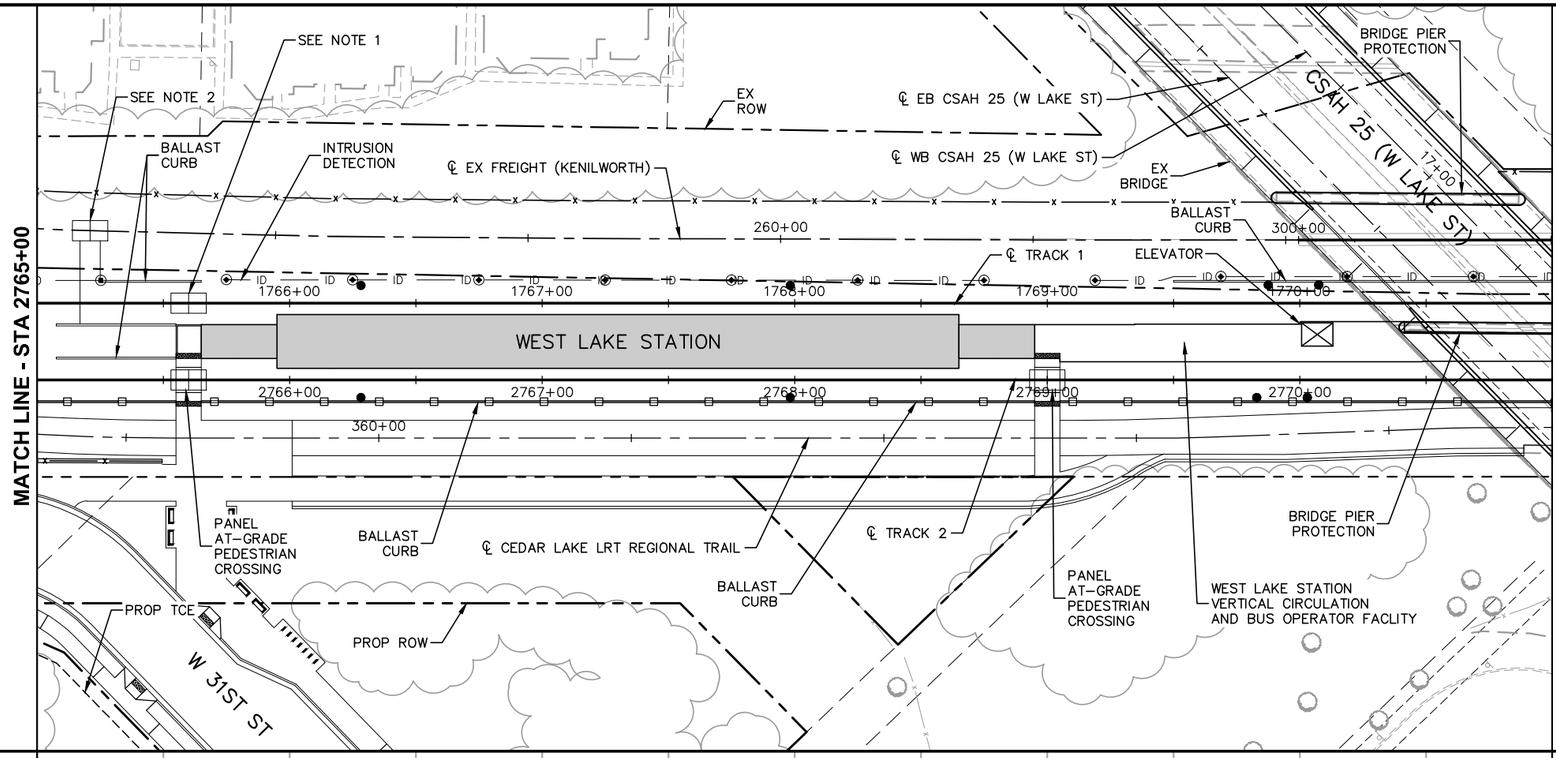

NOTES:

1. FUTURE 8.00' WIDE PANEL AT-GRADE CROSSING ON LRT TRACK 1. ℄ @ STA 1765+60.03. ADJUST TIE SCHEDULE AS INDICATED IN DTL-209.
2. FUTURE 8.00' WIDE PANEL AT-GRADE CROSSING ON EXISTING FREIGHT (KENILWORTH). ℄ CROSSING LRT TRACK 2 STA 2765+21.03, 59.10' LT. INSTALL 10.00' TIES AS INDICATED IN DTL-208. LINE AND SURFACE TRACK TO MATCH EXISTING AND DE-STRESS RAIL AS INDICATED IN THE CONTRACT SPECIFICATIONS.

0 5 10 20
VERTICAL
0 15 30 60
HORIZONTAL
SCALE IN FEET

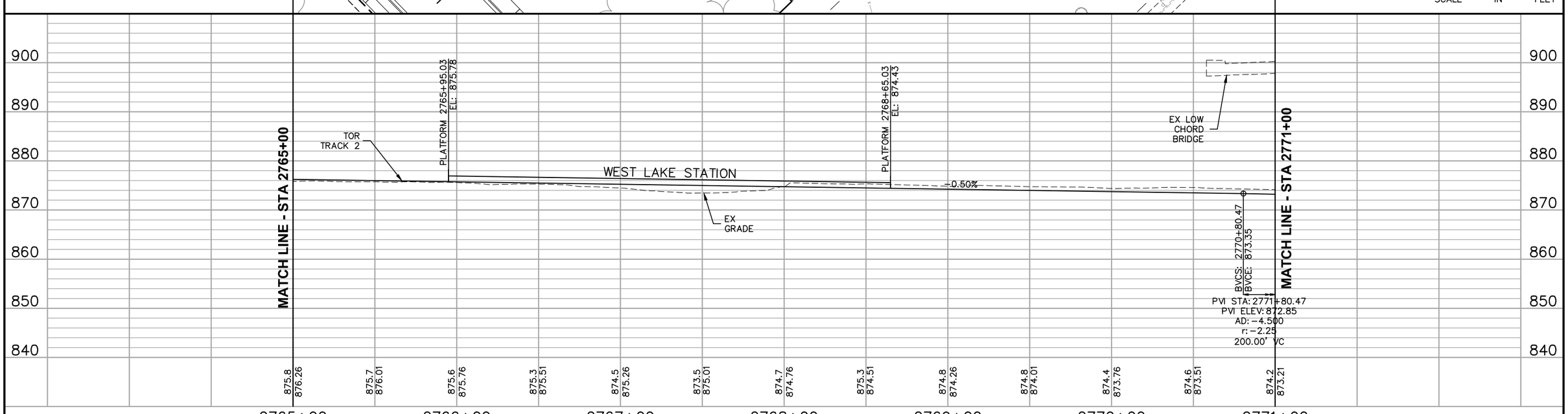

NO.	DATE	BY	CHECK	DESIGN	REVISION / SUBMITTAL

AECOM

90% SUBMISSION - 01/22/16

METROPOLITAN COUNCIL

SOUTHWEST Green Line LRT Extension

CIVIL - VOLUME 3B
TRACK
PLAN AND PROFILE
STA 2765+00 TO STA 2771+00

DISCIPLINE: TRACK

SHEET NAME: E3-TRK-PRF-004

SHEET 275 OF 420

Jan. 18 2016 09:05 am V:\3400_ADC\CAD\00_EAST\PLANSHEETS\TRACK\E3-TRK-PRF.dwg By: V-RasulL

CURVE NO. E3–202
R = 1,959.25'
Lc = 662.99'
Ls = 120.00'
Ea = 2.00"
Eu = 2.09"
V = 45 MPH

CURVE NO. E3–102A
R = 1,390.00'
Lc = 218.39'
Ls_1 = 80.00'
Ls_2 = 40.00'
Ea = 1.50"
Eu = 1.99"
V = 35 MPH

CURVE NO. E3–102B
R = 1,940.00'
Lc = 306.75'
Ls_1 = 40.00'
Ls_2 = 120.00'
Ea = 2.00"
Eu = 2.13"
V = 45 MPH

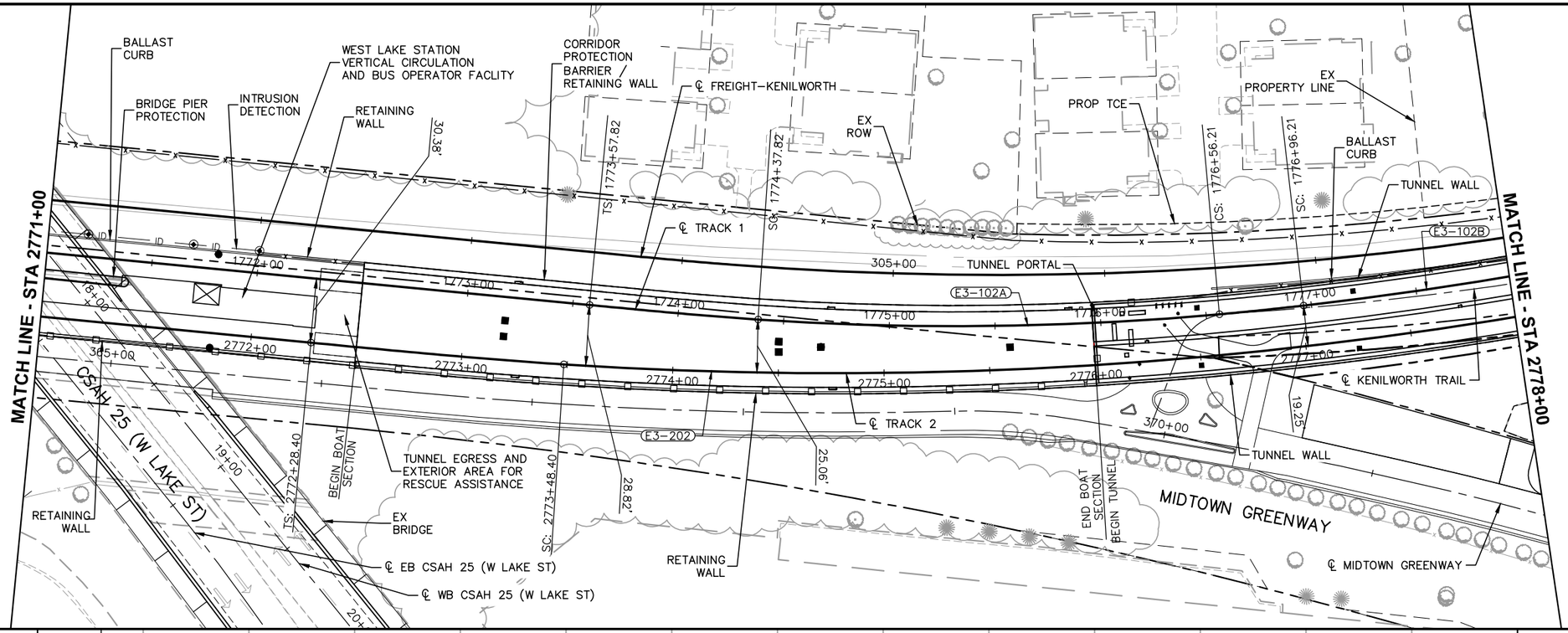

NOTE:
1. SEE SHEET E3–TRK–PRF–005A FOR TRACK 1 PROFILE.

0 5 10 20
VERTICAL
0 15 30 60
HORIZONTAL
SCALE IN FEET

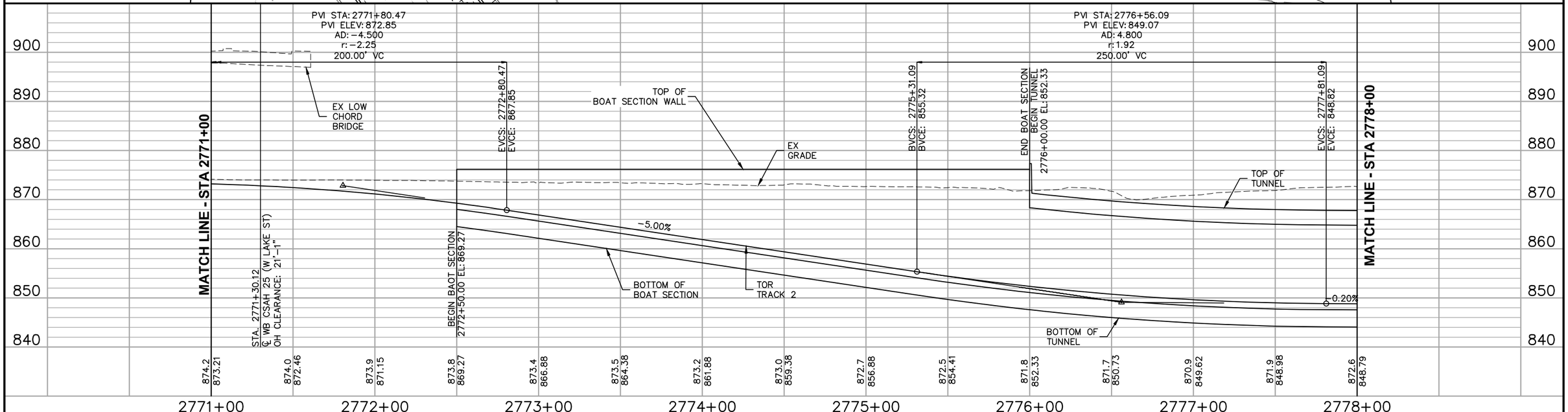

NO.	DATE	BY	CHECK	DESIGN	REVISION / SUBMITTAL

AECOM

90% SUBMISSION - 01/22/16

METROPOLITAN COUNCIL

SOUTHWEST Green Line LRT Extension

CIVIL - VOLUME 3B
TRACK
PLAN AND PROFILE
STA 2771+00 TO STA 2778+00

DISCIPLINE: TRACK

SHEET NAME: E3-TRK-PRF-005

SHEET 276 OF 420

Jan, 18 2016 09:06 am V:\3400_ADC\CAD\00_EAST\PLANSHEETS\TRACK\E3–TRK–PRF.dwg By: V–RasulL

SEE SHEET E3-TRK-PRF-005 FOR PLAN VIEW

0 5 10 20
VERTICAL
0 15 30 60
HORIZONTAL
SCALE IN FEET

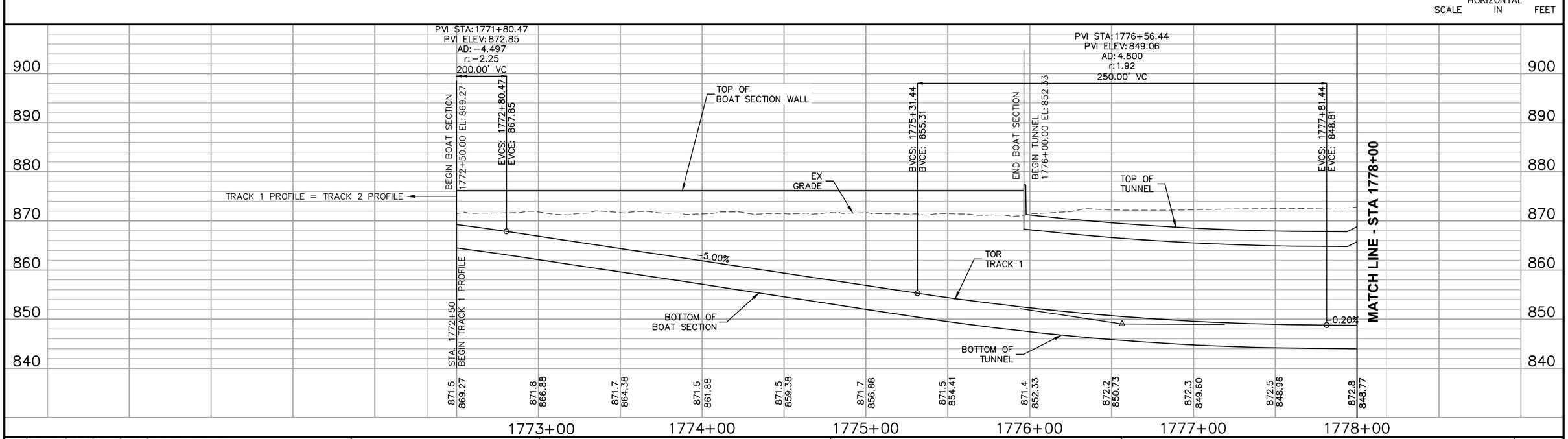

NO.	DATE	BY	CHECK	DESIGN	REVISION / SUBMITTAL

AECOM

90% SUBMISSION - 01/22/16

METROPOLITAN COUNCIL

SOUTHWEST Green Line LRT Extension

CIVIL - VOLUME 3B
TRACK
PLAN AND PROFILE
STA 1772+50 TO STA 1778+00

DISCIPLINE: TRACK

SHEET NAME: E3-TRK-PRF-005A

SHEET 277 OF 420

Jan. 18 2016 09:07 am V:\3400_ADC\CAD\00_EAST\PLANSHEETS\TRACK\E3-TRK-PRF-WB.dwg By: V-RasulL

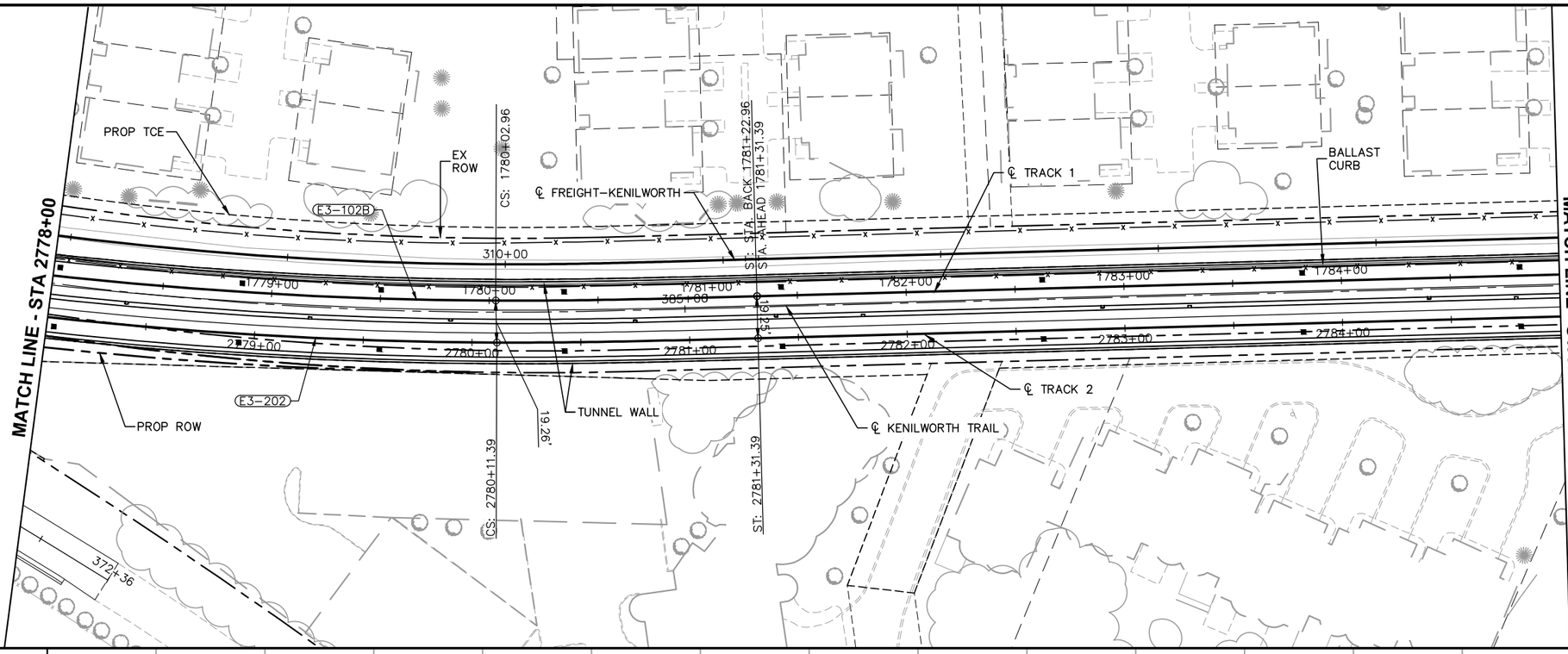

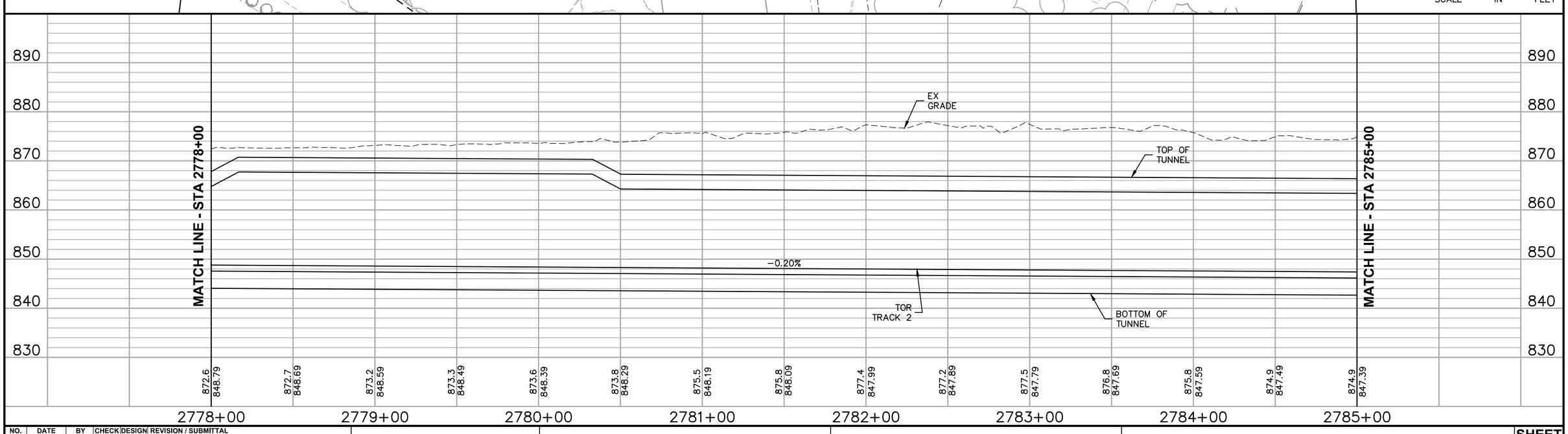

NO.	DATE	BY	CHECK	DESIGN	REVISION / SUBMITTAL

AECOM

90% SUBMISSION - 01/22/16

METROPOLITAN COUNCIL

SOUTHWEST Green Line LRT Extension

CIVIL - VOLUME 3B
TRACK
PLAN AND PROFILE
STA 2778+00 TO STA 2785+00

DISCIPLINE: TRACK

SHEET NAME: E3-TRK-PRF-006

SHEET 278 OF 420

Jan. 18 2016 09:08 am V:\3400_ADC\CAD\00_EAST\PLANSHEETS\TRACK\E3-TRK-PRF.dwg By: V-RasulL

SEE SHEET E3-TRK-PRF-006 FOR PLAN VIEW

VERTICAL
0 5 10 20
HORIZONTAL
SCALE 0 15 30 60 IN FEET

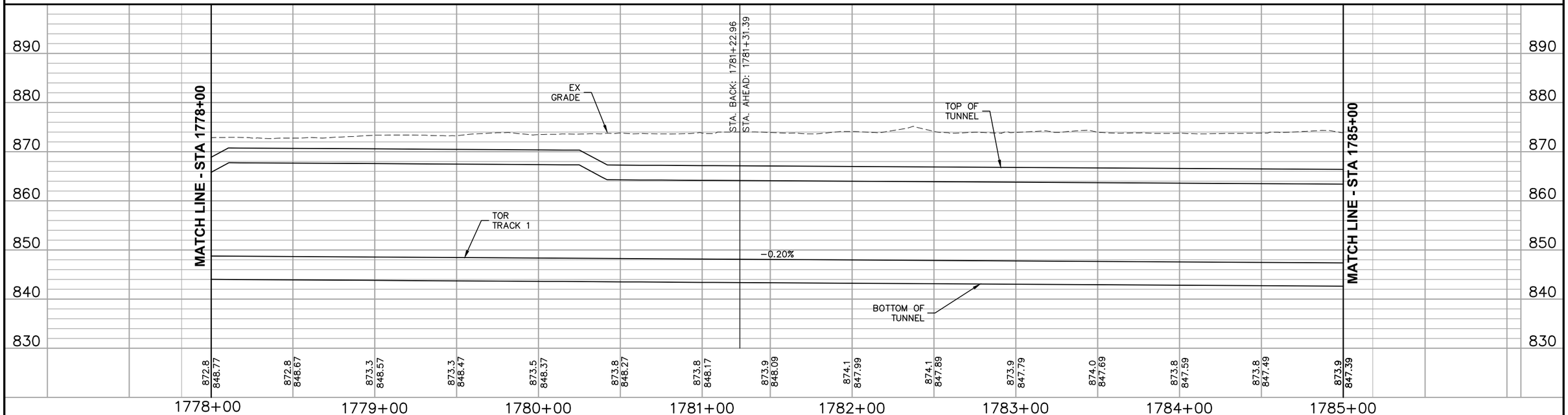

NO.	DATE	BY	CHECK	DESIGN	REVISION / SUBMITTAL

AECOM

90% SUBMISSION - 01/22/16

METROPOLITAN COUNCIL

SOUTHWEST Green Line LRT Extension

CIVIL - VOLUME 3B
TRACK
PLAN AND PROFILE
STA 1778+00 TO STA 1785+00

DISCIPLINE: TRACK

SHEET NAME: E3-TRK-PRF-006A

SHEET 279 OF 420

Jan. 18 2016 09:09 am V:\3400_ADC\CAD\00_EAST\PLANSHEETS\TRACK\E3-TRK-PRF-WB.dwg By: V-RasulL

CURVE NO. E3–203
R = 1,820.00'
Lc = 343.34'
Ls = 120.00'
Ea = 2.25"
Eu = 2.16"
V = 45 MPH

CURVE NO. E3–103
R = 1,839.25'
Lc = 348.24'
Ls = 120.00'
Ea = 2.25"
Eu = 2.11"
V = 45 MPH

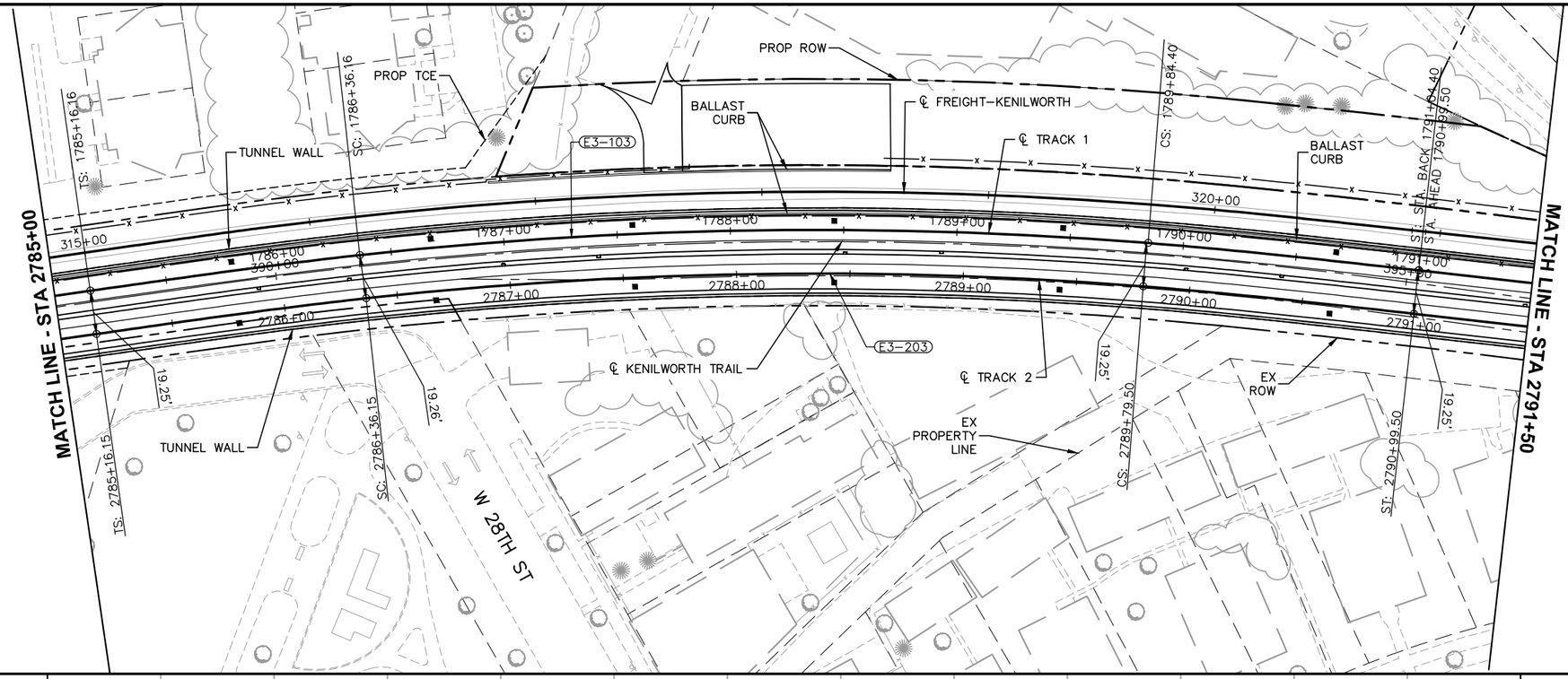

NOTE:
1. SEE SHEET E3–TRK–PRF–007A FOR TRACK 1 PROFILE.

0 5 10 20
VERTICAL
0 15 30 60
HORIZONTAL
SCALE IN FEET

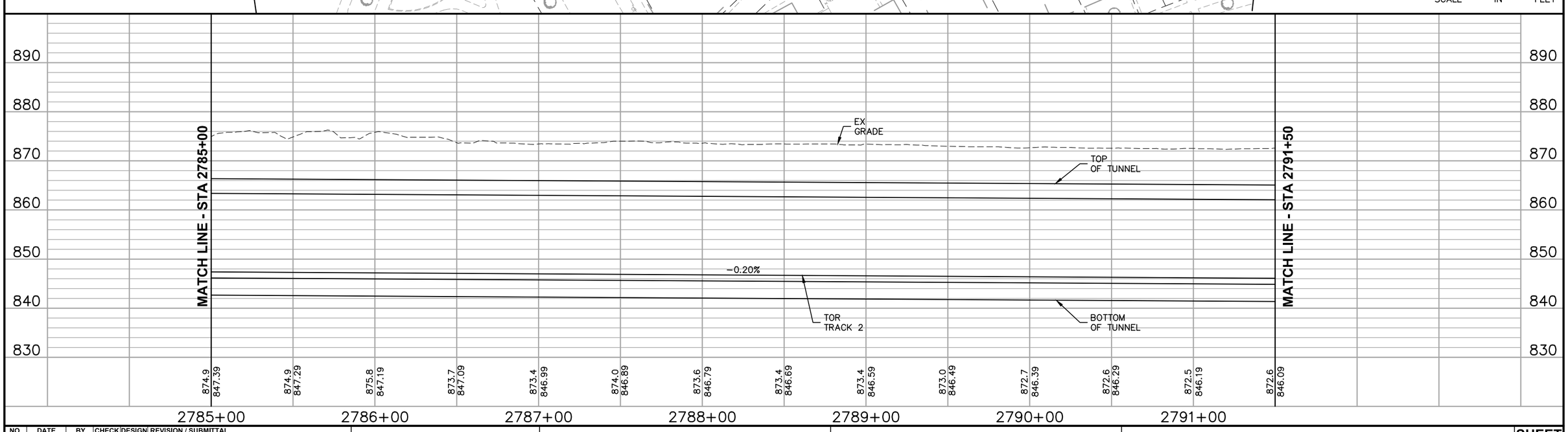

NO.	DATE	BY	CHECK	DESIGN	REVISION / SUBMITTAL

AECOM

90% SUBMISSION - 01/22/16

METROPOLITAN COUNCIL

SOUTHWEST Green Line LRT Extension

CIVIL - VOLUME 3B
TRACK
PLAN AND PROFILE
STA 2785+00 TO STA 2791+50

DISCIPLINE: TRACK

SHEET NAME: E3-TRK-PRF-007

SHEET 280 OF 420

Jan. 18 2016 09:10 am V:\3400_ADC\CAD\00_EAST\PLANSHEETS\TRACK\E3–TRK–PRF.dwg By: V–RasulL

SEE SHEET E3-TRK-PRF-007 FOR PLAN VIEW

0 5 10 20
VERTICAL
0 15 30 60
HORIZONTAL
SCALE IN FEET

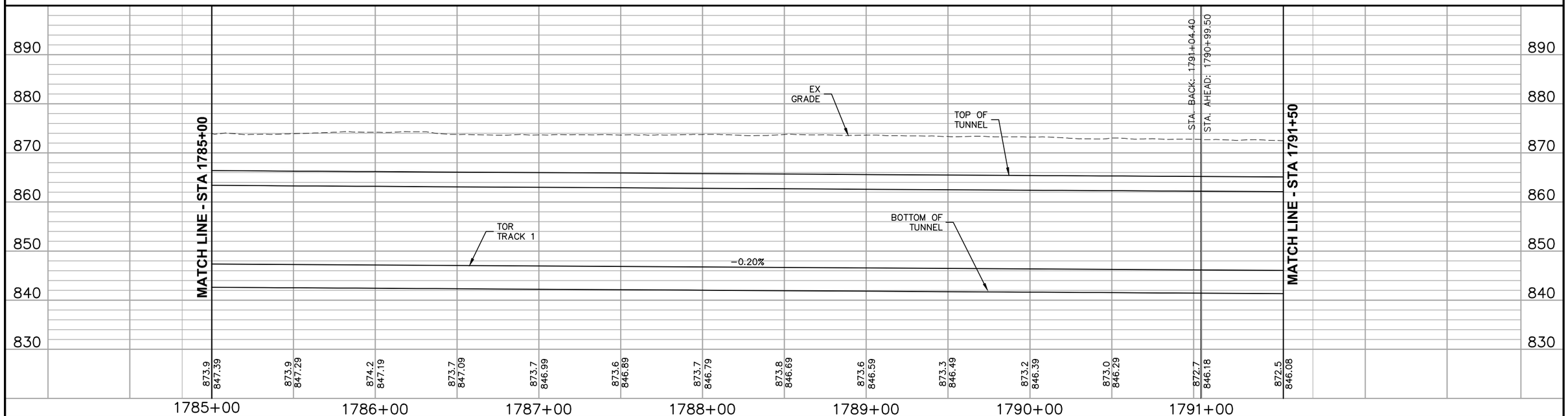

NO.	DATE	BY	CHECK	DESIGN	REVISION / SUBMITTAL

AECOM

90% SUBMISSION - 01/22/16

METROPOLITAN COUNCIL

SOUTHWEST Green Line LRT Extension

CIVIL - VOLUME 3B
TRACK
PLAN AND PROFILE
STA 1785+00 TO STA 1791+50

DISCIPLINE: TRACK

SHEET NAME: E3-TRK-PRF-007A

SHEET 281 OF 420

Jan. 18 2016 09:10 am V:\3400_ADC\CAD\00_EAST\PLANSHEETS\TRACK\E3-TRK-PRF-WB.dwg By: V-RasulL

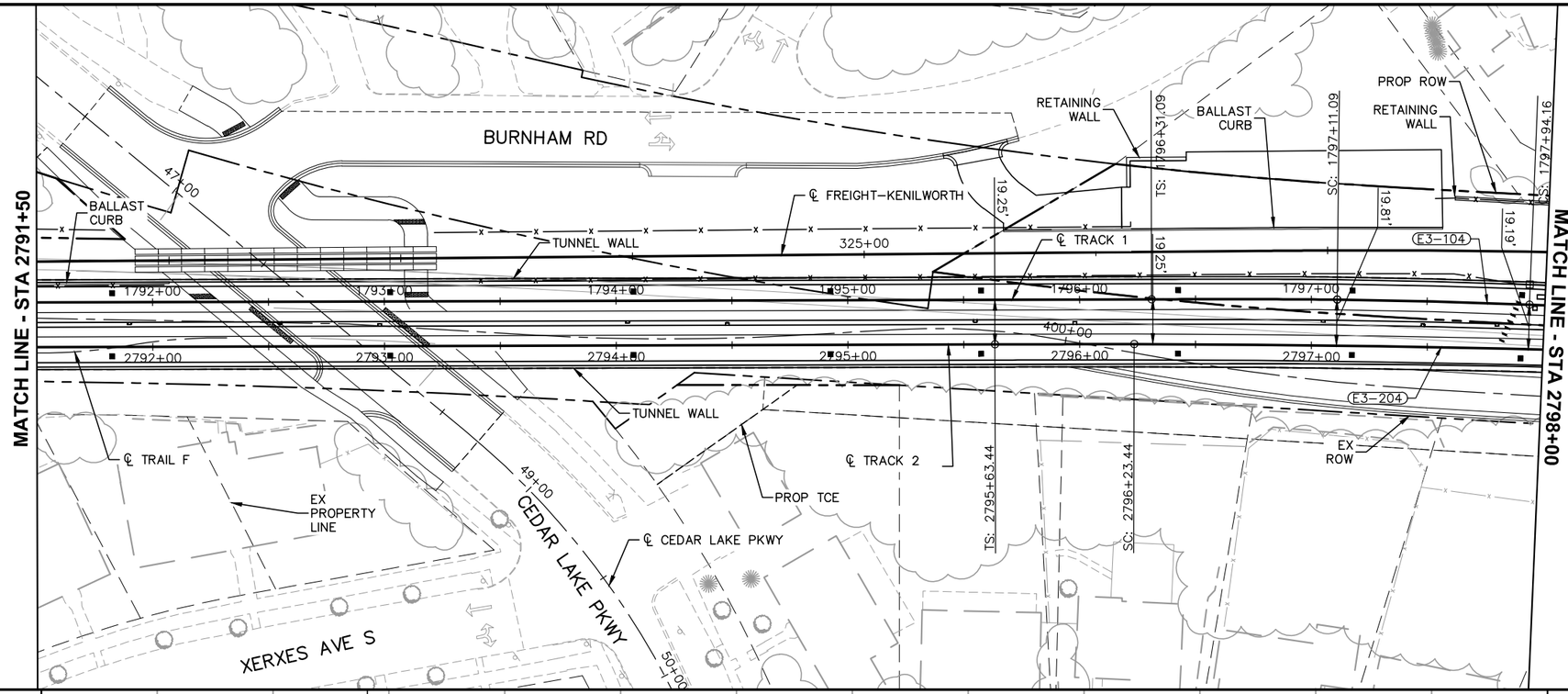

CURVE NO. E3-204
R = 7,530.00'
Lc = 370.85'
Ls = 60.00'
Ea = 0.00"
Eu = 1.06"
V = 45 MPH

CURVE NO. E3-104
R = 2,850.00'
Lc = 83.07'
Ls = 80.00'
Ea = 1.25"
Eu = 1.56"
V = 45 MPH

NOTE:
1. SEE SHEET E3-TRK-PRF-008A FOR TRACK 1 PROFILE.

0 5 10 20
VERTICAL
0 15 30 60
HORIZONTAL
SCALE IN FEET

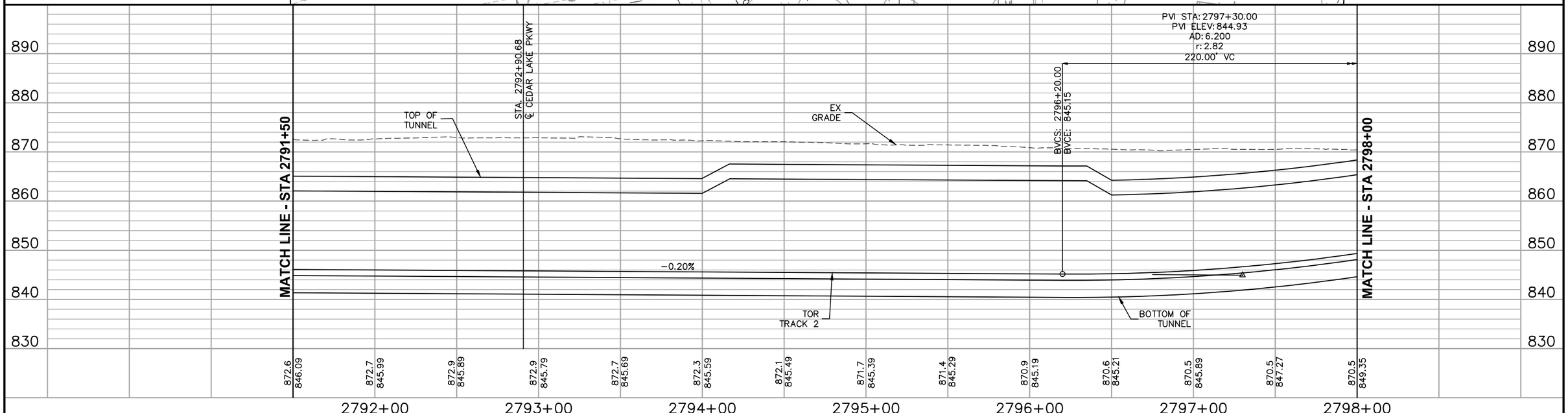

NO.	DATE	BY	CHECK	DESIGN	REVISION / SUBMITTAL

AECOM

90% SUBMISSION - 01/22/16

METROPOLITAN COUNCIL

SOUTHWEST Green Line LRT Extension

CIVIL - VOLUME 3B
TRACK
PLAN AND PROFILE
STA 2791+50 TO STA 2798+00

DISCIPLINE: TRACK

SHEET NAME: E3-TRK-PRF-008

SHEET 282 OF 420

Jan, 18 2016 09:11 am v:\3400_ADC\CAD\00_EAST\PLANSHEETS\TRACK\E3-TRK-PRF.dwg By: V-RasulL

SEE SHEET E3-TRK-PRF-008 FOR PLAN VIEW

0 5 10 20
VERTICAL
0 15 30 60
HORIZONTAL
SCALE IN FEET

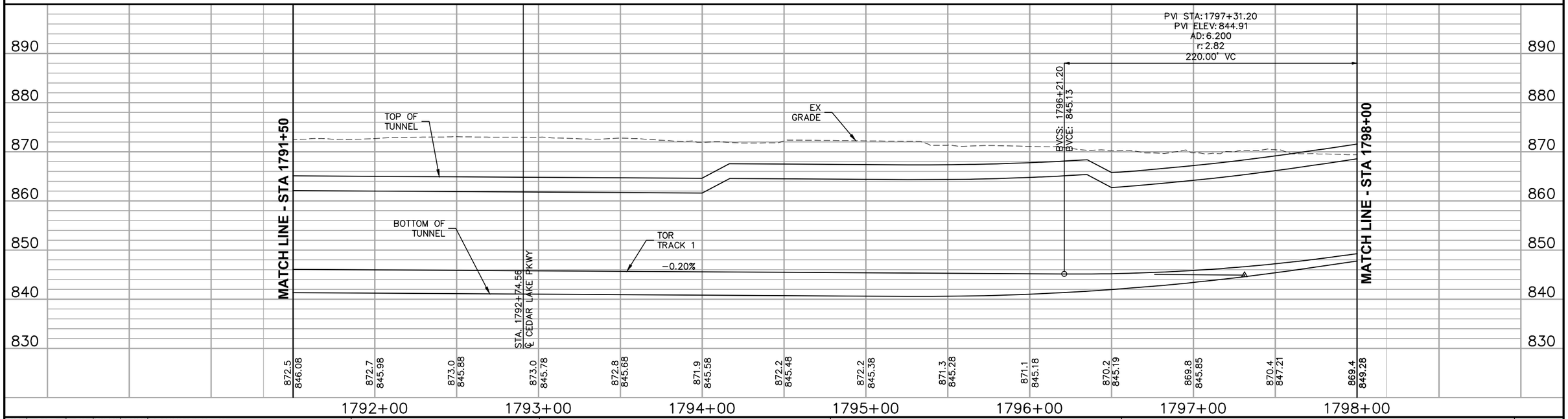

NO.	DATE	BY	CHECK	DESIGN	REVISION / SUBMITTAL

AECOM

90% SUBMISSION - 01/22/16

METROPOLITAN COUNCIL

SOUTHWEST Green Line LRT Extension

CIVIL - VOLUME 3B
TRACK
PLAN AND PROFILE
STA 1791+50 TO STA 1798+00

DISCIPLINE: TRACK

SHEET NAME: E3-TRK-PRF-008A

SHEET 283 OF 420

Jan. 18 2016 09:12 am V:\3400_ADC\CAD\00_EAST\PLANSHEETS\TRACK\E3-TRK-PRF-WB.dwg By: V-RasulL

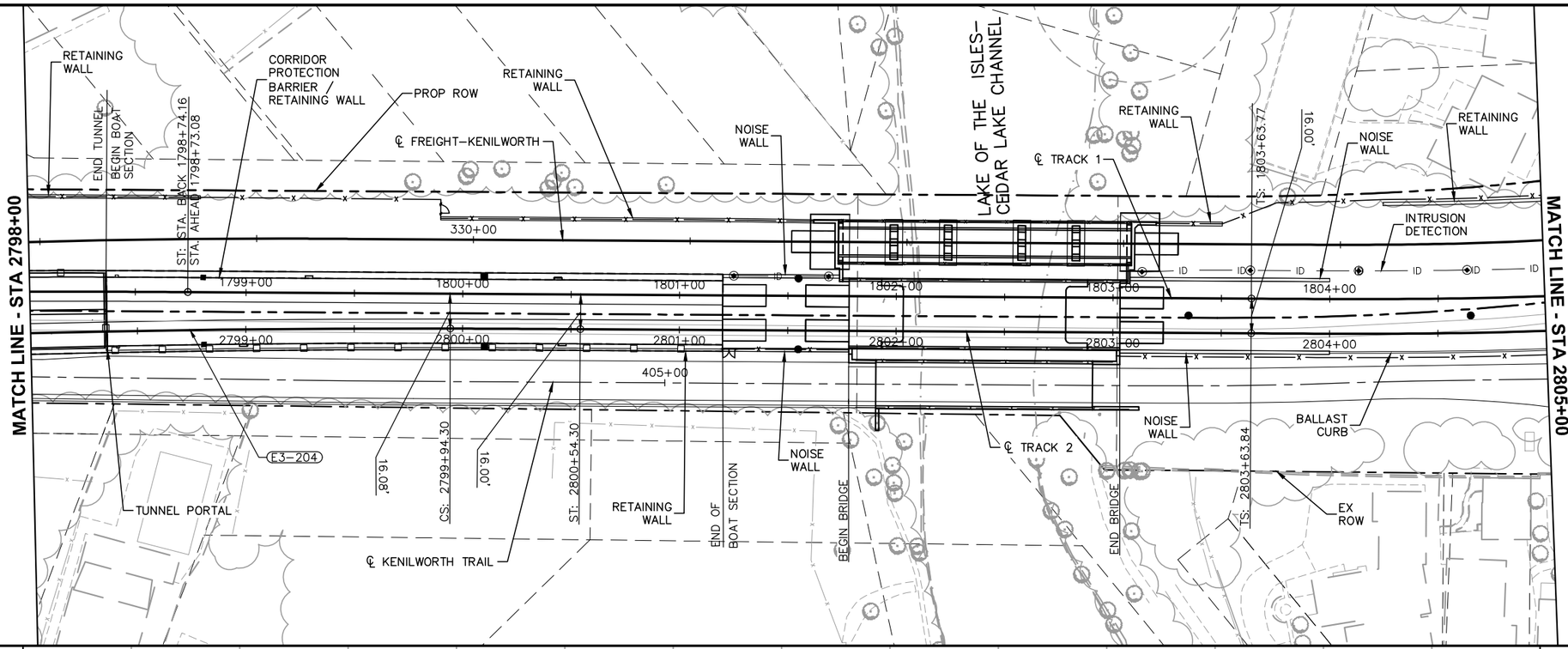

NOTE:
1. SEE SHEET E3–TRK–PRF–009A FOR TRACK 1 PROFILE.

0 5 10 20
VERTICAL
0 15 30 60
HORIZONTAL
SCALE IN FEET

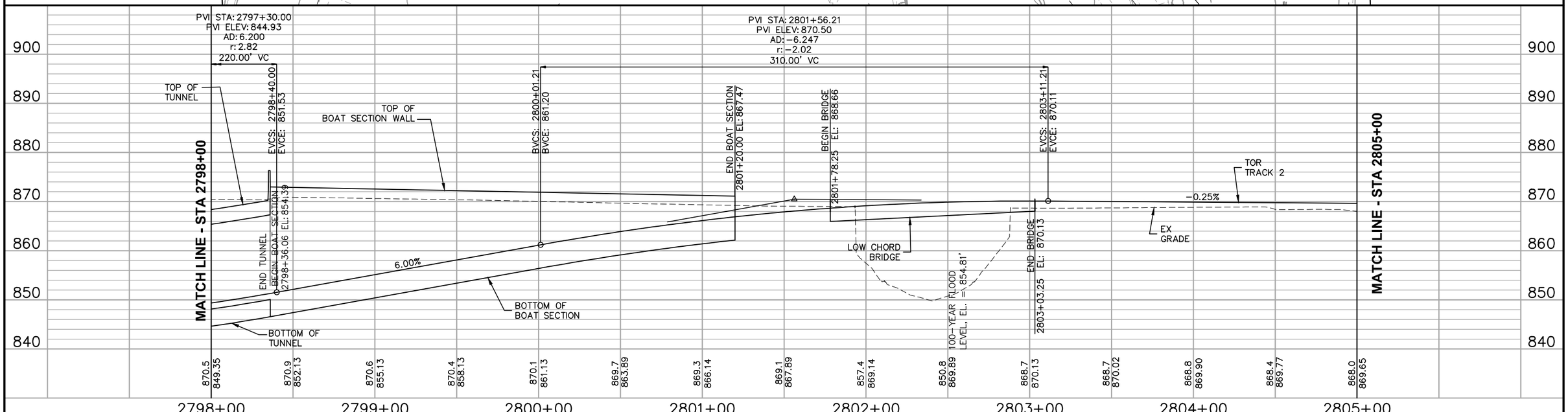

NO.	DATE	BY	CHECK	DESIGN	REVISION / SUBMITTAL

AECOM

90% SUBMISSION - 01/22/16

METROPOLITAN COUNCIL

SOUTHWEST Green Line LRT Extension

CIVIL - VOLUME 3B
TRACK
PLAN AND PROFILE
STA 2798+00 TO STA 2805+00

DISCIPLINE: TRACK

SHEET NAME: E3-TRK-PRF-009

SHEET 284 OF 420

Jan, 18 2016 09:13 am V:\3400_ADC\CAD\00_EAST\PLANSHEETS\TRACK\E3-TRK-PRF.dwg By: V-RasulL

SEE SHEET E3-TRK-PRF-009 FOR PLAN VIEW

0 5 10 20
VERTICAL
0 15 30 60
HORIZONTAL
SCALE IN FEET

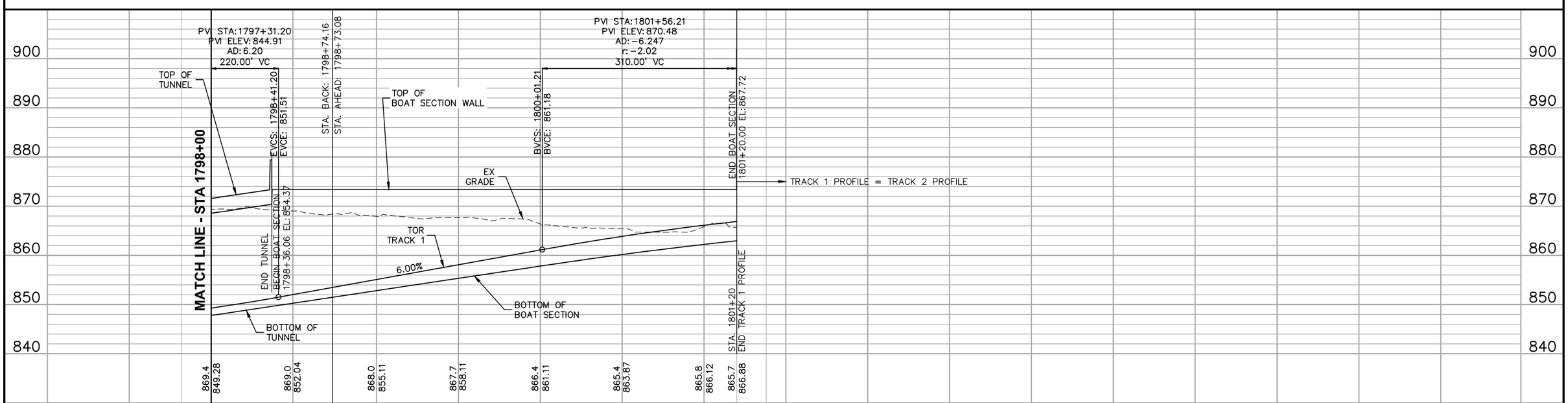

NO.	DATE	BY	CHECK	DESIGN	REVISION / SUBMITTAL

AECOM

90% SUBMISSION - 01/22/16

METROPOLITAN COUNCIL

SOUTHWEST Green Line LRT Extension

CIVIL - VOLUME 3B
TRACK
PLAN AND PROFILE
STA 1798+00 TO STA 1801+20

DISCIPLINE: TRACK

SHEET NAME: E3-TRK-PRF-009A

SHEET 285 OF 420

Jan. 18 2016 09:14 am V:\3400_ADC\CAD\00_EAST\PLANSHEETS\TRACK\E3-TRK-PRF-WB.dwg By: V-RasulL

CURVE NO. E3–205
R = 1,410.00'
Lc = 568.12'
Ls = 150.00'
Ea = 3.00"
Eu = 2.69"
V = 45 MPH

CURVE NO. E3–105
R = 1,410.00'
Lc = 568.12'
Ls = 150.00'
Ea = 3.00"
Eu = 2.69"
V = 45 MPH

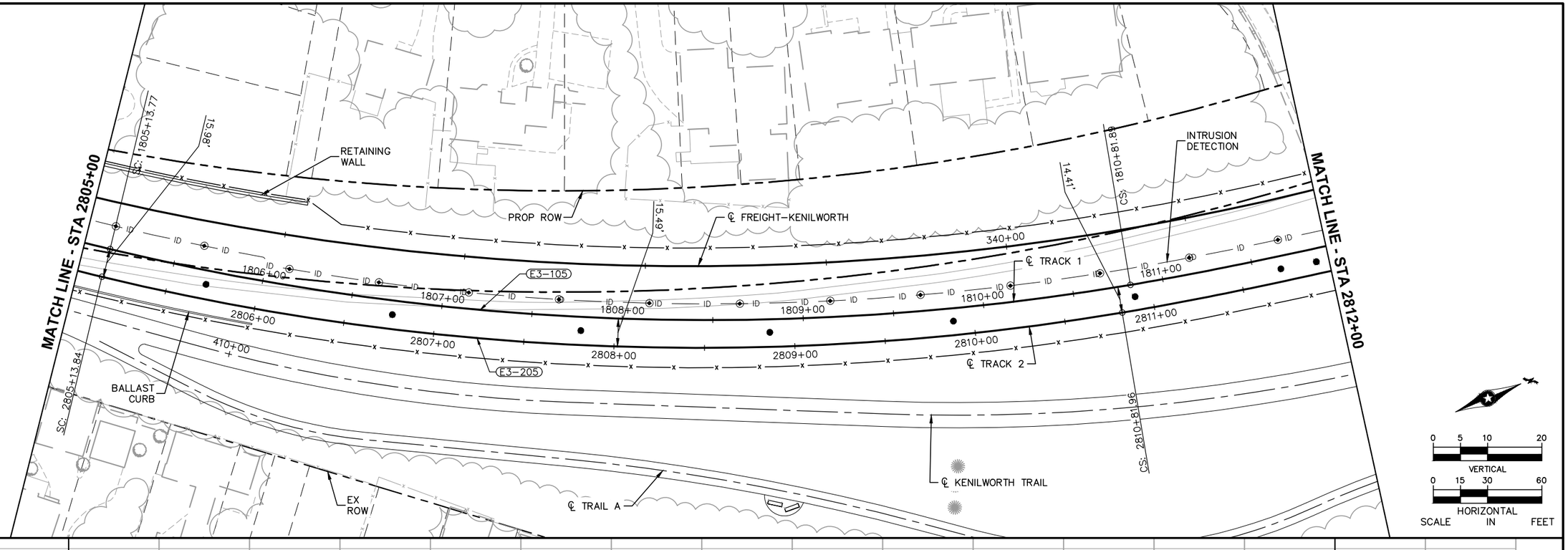

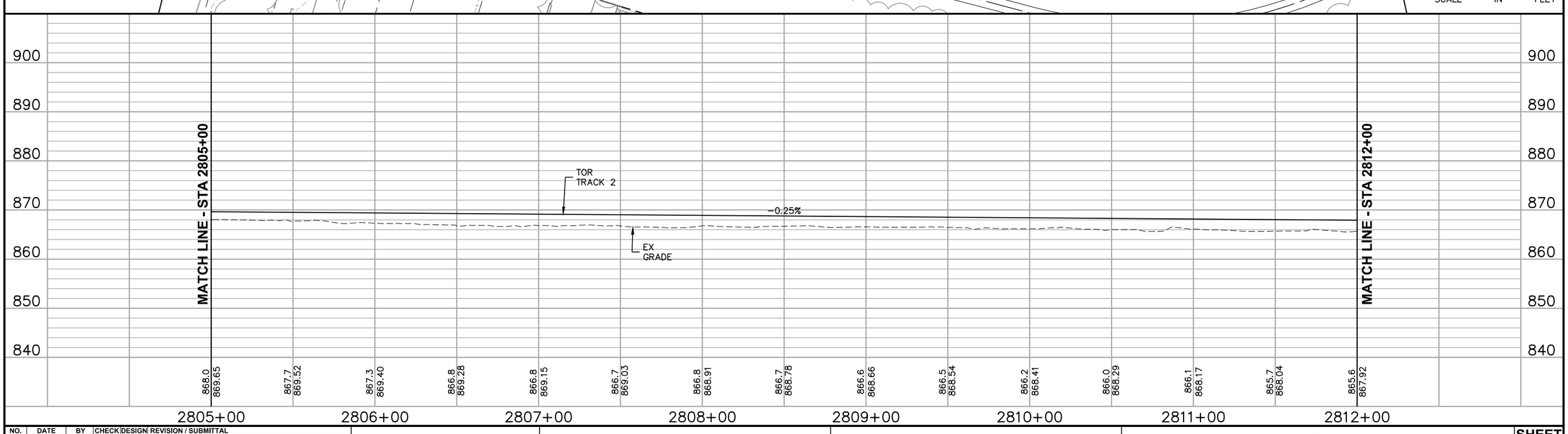

NO.	DATE	BY	CHECK	DESIGN	REVISION / SUBMITTAL

AECOM

90% SUBMISSION - 01/22/16

METROPOLITAN COUNCIL

SOUTHWEST Green Line LRT Extension

CIVIL - VOLUME 3B
TRACK
PLAN AND PROFILE
STA 2805+00 TO STA 2812+00

DISCIPLINE: TRACK

SHEET NAME: E3-TRK-PRF-010

SHEET 286 OF 420

Jan. 18 2016 09:15 am V:\3400_ADC\CAD\00_EAST\PLANSHEETS\TRACK\E3-TRK-PRF.dwg By: V-RasulL

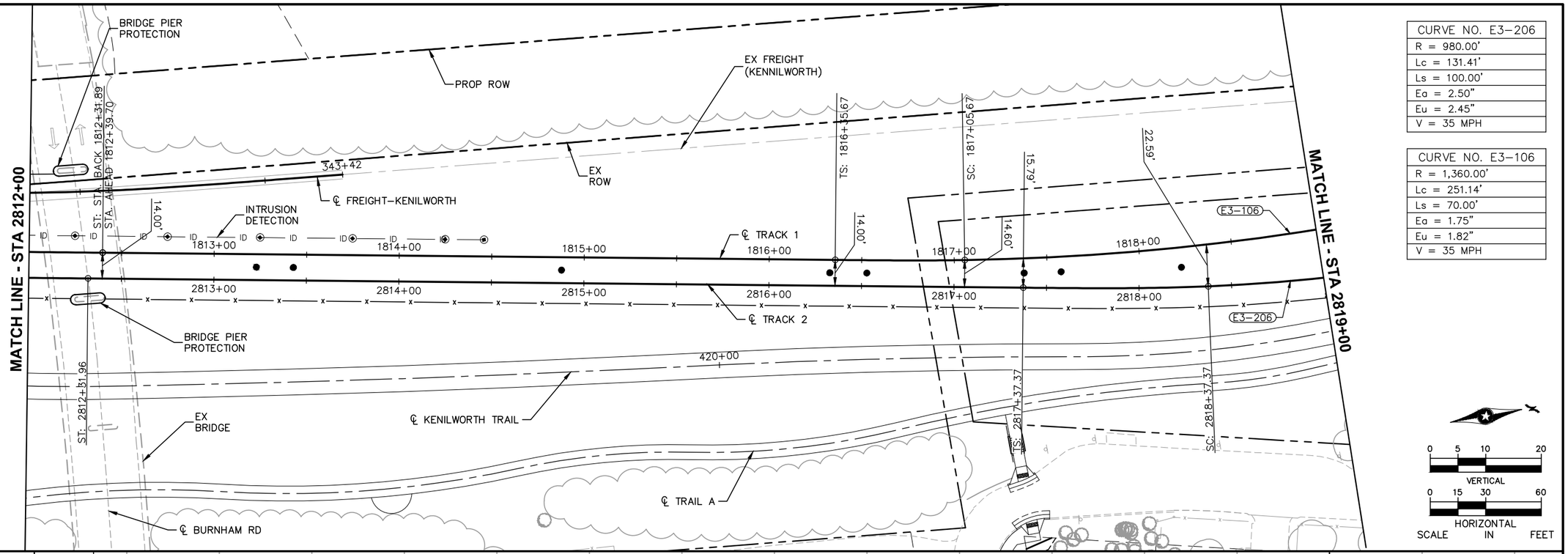

CURVE NO. E3–206
R = 980.00'
Lc = 131.41'
Ls = 100.00'
Ea = 2.50"
Eu = 2.45"
V = 35 MPH

CURVE NO. E3–106
R = 1,360.00'
Lc = 251.14'
Ls = 70.00'
Ea = 1.75"
Eu = 1.82"
V = 35 MPH

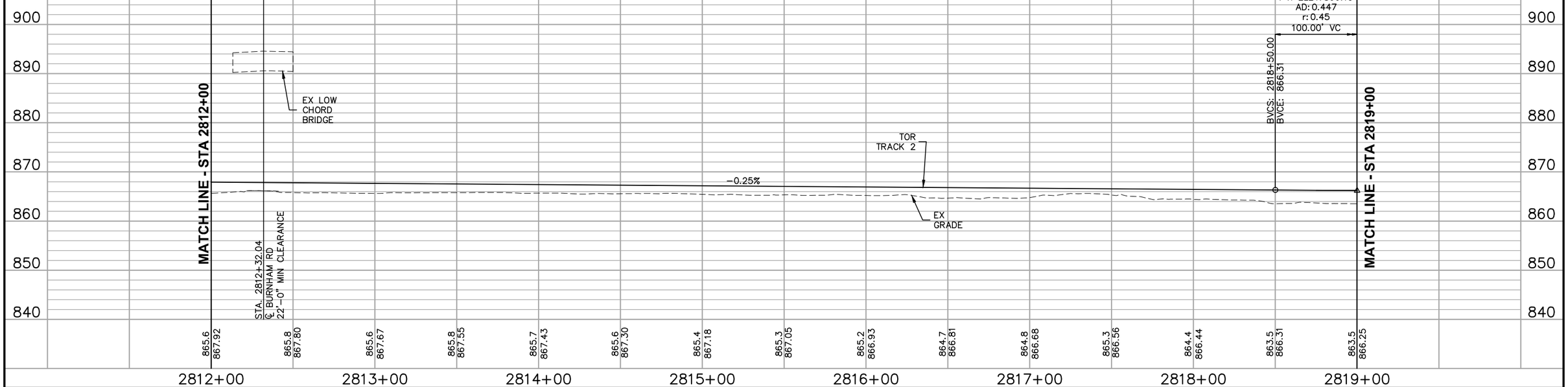

NO.	DATE	BY	CHECK	DESIGN	REVISION / SUBMITTAL

AECOM

90% SUBMISSION - 01/22/16

METROPOLITAN COUNCIL

SOUTHWEST Green Line LRT Extension

CIVIL - VOLUME 3B
TRACK
PLAN AND PROFILE
STA 2812+00 TO STA 2819+00

DISCIPLINE: TRACK

SHEET NAME: E3-TRK-PRF-011

SHEET 287 OF 420

Jan, 18 2016 09:16 am V:\3400_ADC\CAD\00_EAST\PLANSHEETS\TRACK\E3-TRK-PRF.dwg By: V-RasulL

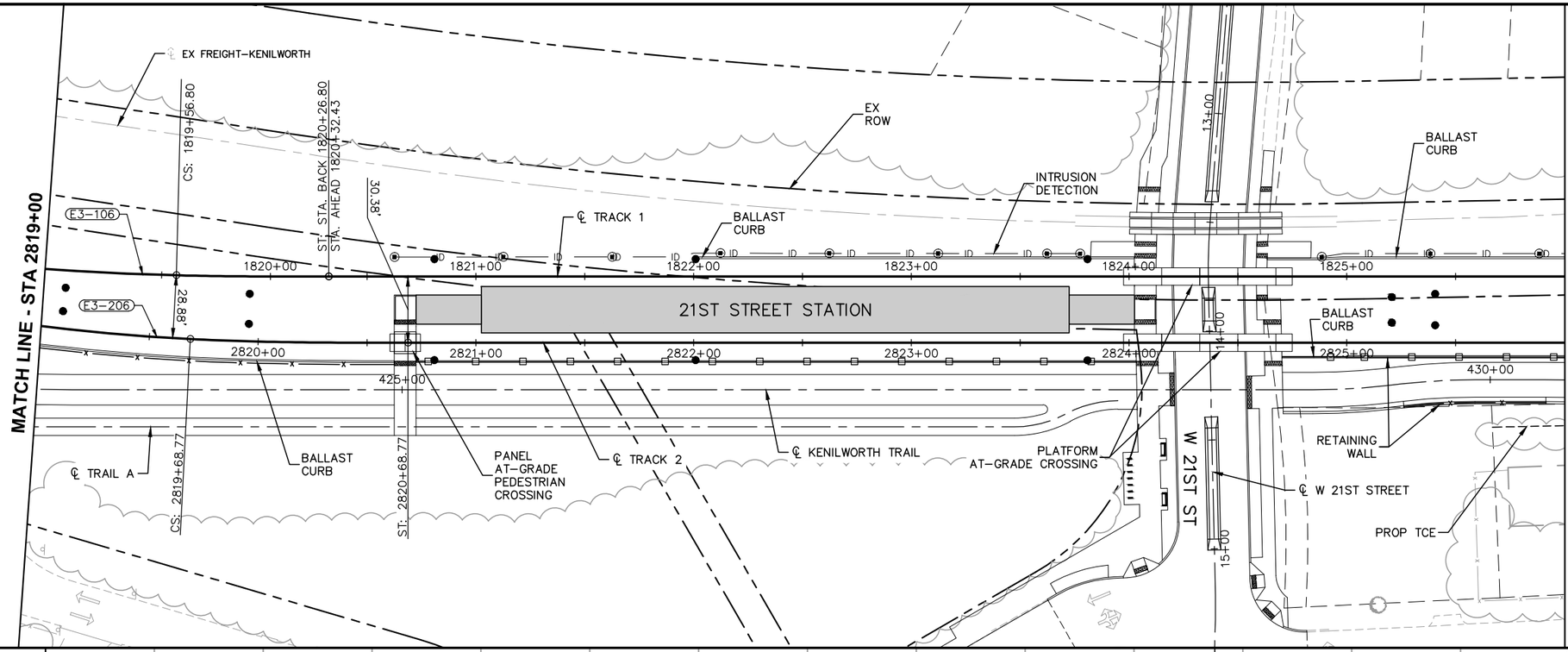

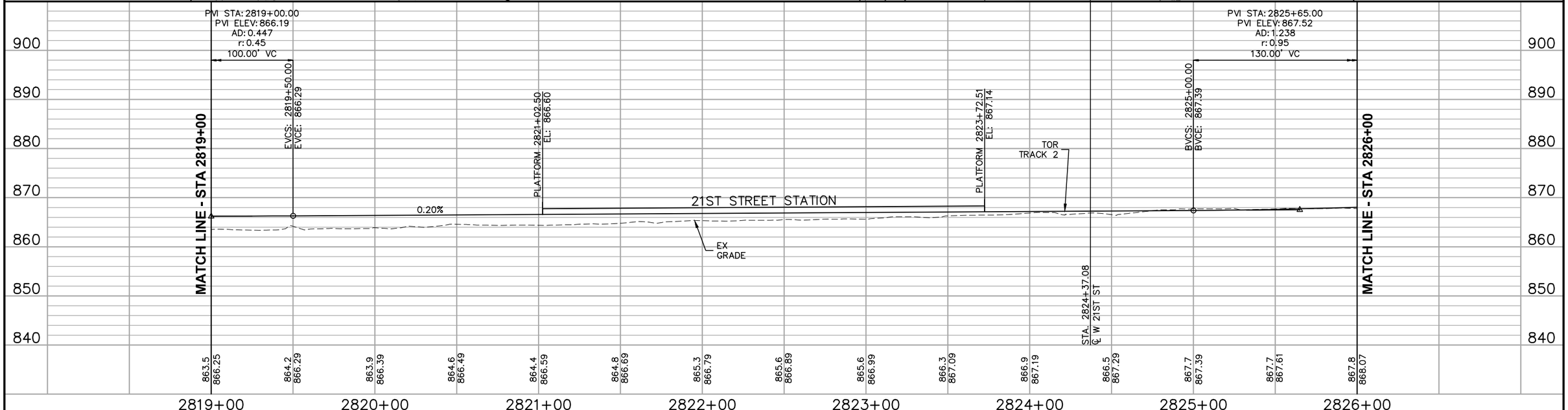

NO.	DATE	BY	CHECK	DESIGN	REVISION / SUBMITTAL

AECOM

90% SUBMISSION - 01/22/16

METROPOLITAN COUNCIL

SOUTHWEST Green Line LRT Extension

CIVIL - VOLUME 3B
TRACK
PLAN AND PROFILE
STA 2819+00 TO STA 2826+00

SHEET 288 OF 420

DISCIPLINE: TRACK

SHEET NAME: E3-TRK-PRF-012

Jan, 18 2016 09:16 am V:\3400_ADC\CAD\00_EAST\PLANSHEETS\TRACK\E3-TRK-PRF.dwg By: V-RasulL

CURVE NO. E3–207
R = 860.00'
Lc = 286.96'
Ls = 170.00'
Ea = 4.00"
Eu = 3.37"
V = 40 MPH

CURVE NO. E3–107
R = 860.00'
Lc = 286.96'
Ls = 170.00'
Ea = 4.00"
Eu = 3.37"
V = 40 MPH

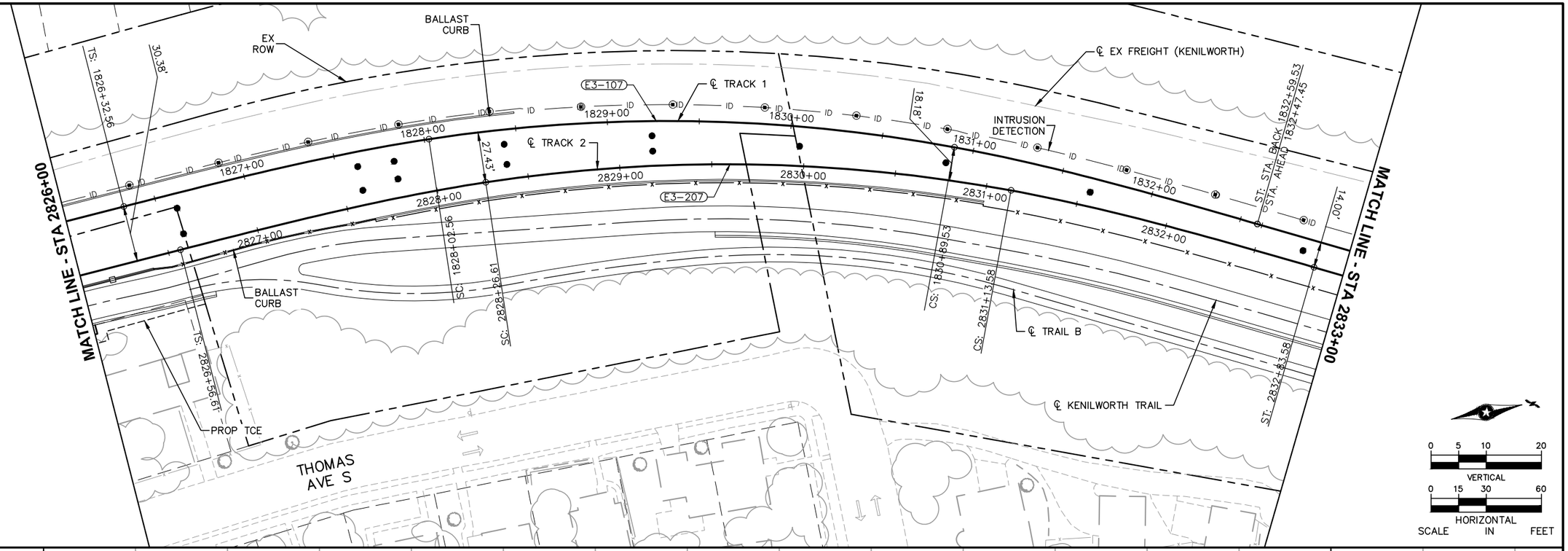

0 5 10 20
VERTICAL
0 15 30 60
HORIZONTAL
SCALE IN FEET

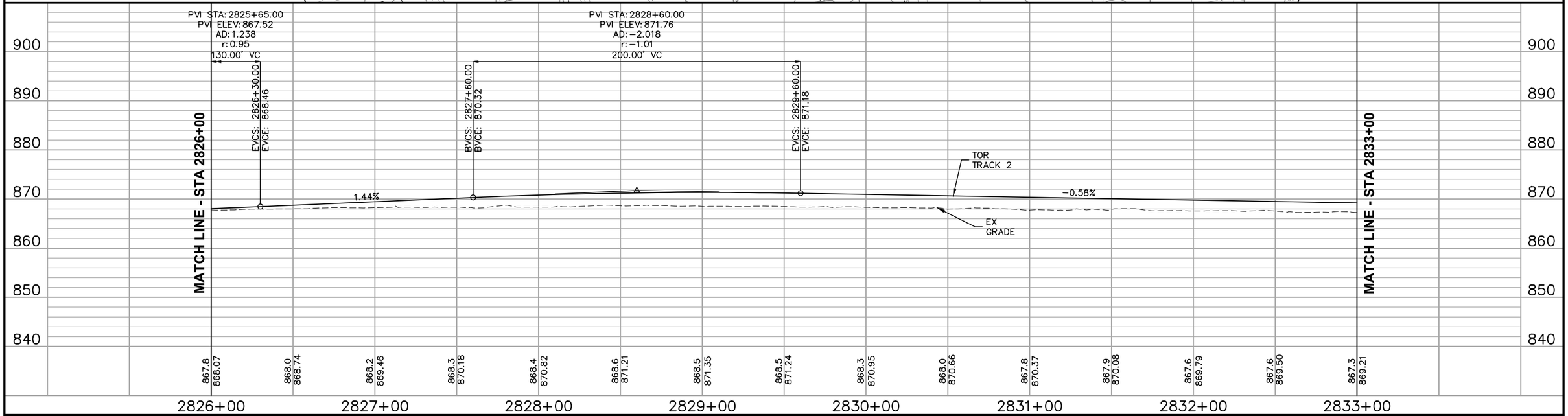

NO.	DATE	BY	CHECK	DESIGN	REVISION / SUBMITTAL

AECOM

90% SUBMISSION - 01/22/16

METROPOLITAN COUNCIL

SOUTHWEST Green Line LRT Extension

CIVIL - VOLUME 3B
TRACK
PLAN AND PROFILE
STA 2826+00 TO STA 2833+00

DISCIPLINE: TRACK

SHEET NAME: E3-TRK-PRF-013

SHEET 289 OF 420

Jan, 18 2016 09:17 am V:\3400_ADC\CAD\00_EAST\PLANSHEETS\TRACK\E3-TRK-PRF.dwg By: V-RasulL

MATCH LINE - STA 2833+00

MATCHLINE - STA 2842+00

EX ROW

℄ EX FREIGHT (KENILWORTH)

STA. BACK: 1837+00.01
STA. AHEAD: 1839+97.38

INTRUSION DETECTION

ID ID ID ID ID ID ID ID ID ID ID ID ID ID

℄ TRACK 1

1834+00 1835+00 1836+00 1840+00 1841+00

2834+00 2835+00 2836+00 2840+00 2841+00

14.00'

℄ TRACK 2

440+00

℄ TRAIL B

℄ KENILWORTH TRAIL

STA. BACK: 2837+00.01
STA. AHEAD: 2839+97.38

0 5 10 20
VERTICAL

0 15 30 60
HORIZONTAL
SCALE IN FEET

900 890 880 870 860 850 840

MATCH LINE - STA 2833+00

MATCHLINE - STA 2842+00

TOR TRACK 2

-0.58%

EX GRADE

867.3	867.2	866.6	866.4	866.3	865.7
869.21	868.92	868.63	868.34	868.05	867.76

865.6	865.4	864.8	864.4	864.2	863.7
867.47	867.18	866.87	866.59	866.30	866.01

863.4
865.72

2833+00 2834+00 2835+00 2836+00 2840+00 2841+00 2842+00

NO.	DATE	BY	CHECK	DESIGN	REVISION / SUBMITTAL

AECOM

90% SUBMISSION - 01/22/16

METROPOLITAN COUNCIL

SOUTHWEST Green Line LRT Extension

CIVIL - VOLUME 3B
TRACK
PLAN AND PROFILE
STA 2833+00 TO STA 2842+00

DISCIPLINE: TRACK

SHEET NAME: E3-TRK-PRF-014

SHEET 290 OF 420

Jan. 18 2016 09:18 am V:\3400_ADC\CAD\00_EAST\PLANSHEETS\TRACK\E3-TRK-PRF.dwg By: V-RasulL

CURVE NO. E4–200
R = 2,460.00'
Lc = 811.53'
Ls = 130.00'
Ea = 2.00"
Eu = 2.02"
V = 50 MPH

CURVE NO. E4–100
R = 2,460.00'
Lc = 661.25'
Ls = 130.00'
Ea = 2.00"
Eu = 2.02"
V = 50 MPH

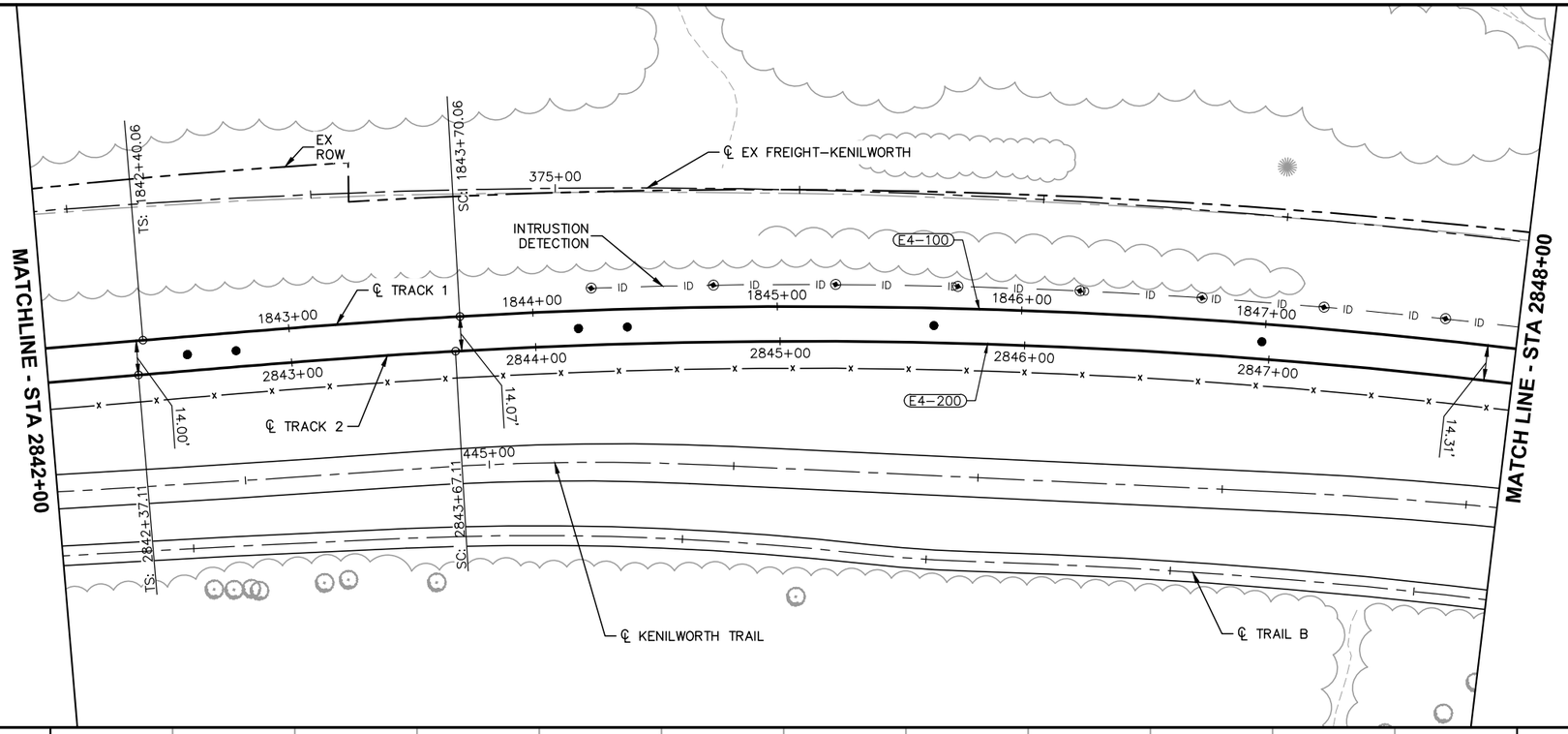

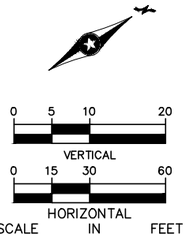

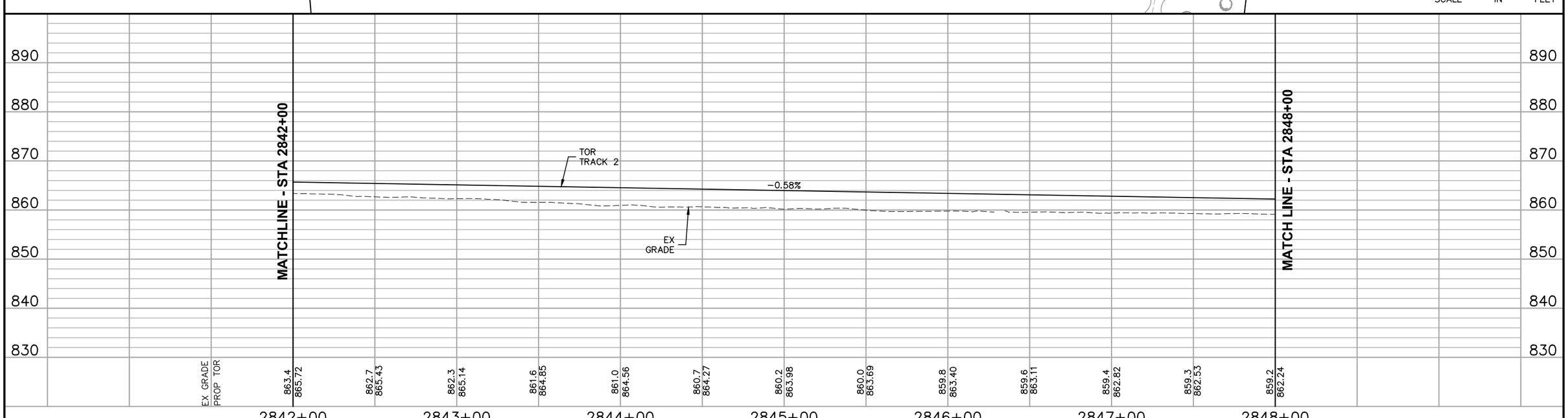

NO.	DATE	BY	CHECK	DESIGN	REVISION / SUBMITTAL

AECOM

90% SUBMISSION - 01/22/16

METROPOLITAN COUNCIL

SOUTHWEST Green Line LRT Extension

CIVIL - VOLUME 3B
TRACK
PLAN AND PROFILE
STA 2842+00 TO STA 2848+00

DISCIPLINE: TRACK

SHEET NAME: E4-TRK-PRF-001

SHEET 291 OF 420

Jan. 18 2016 09:48 am V:\3400_ADC\CAD\00_EAST\PLANSHEETS\TRACK\E4-TRK-PRF.dwg By: V-RasulL

CURVE NO. E4–101
R = 1,190.00'
Lc = 112.91'
Ls = 80.00'
Ea = 2.00"
Eu = 2.08"
V = 35 MPH

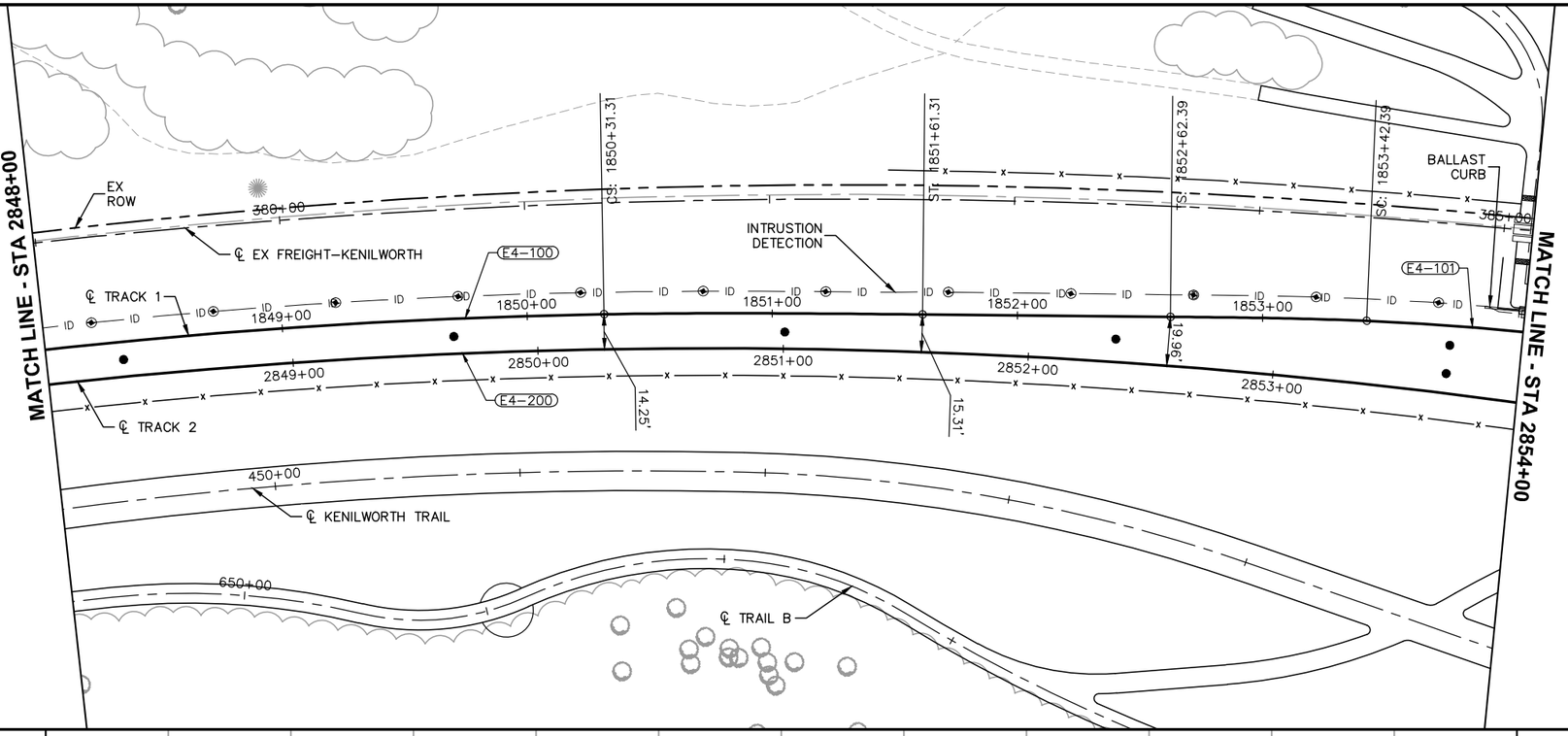

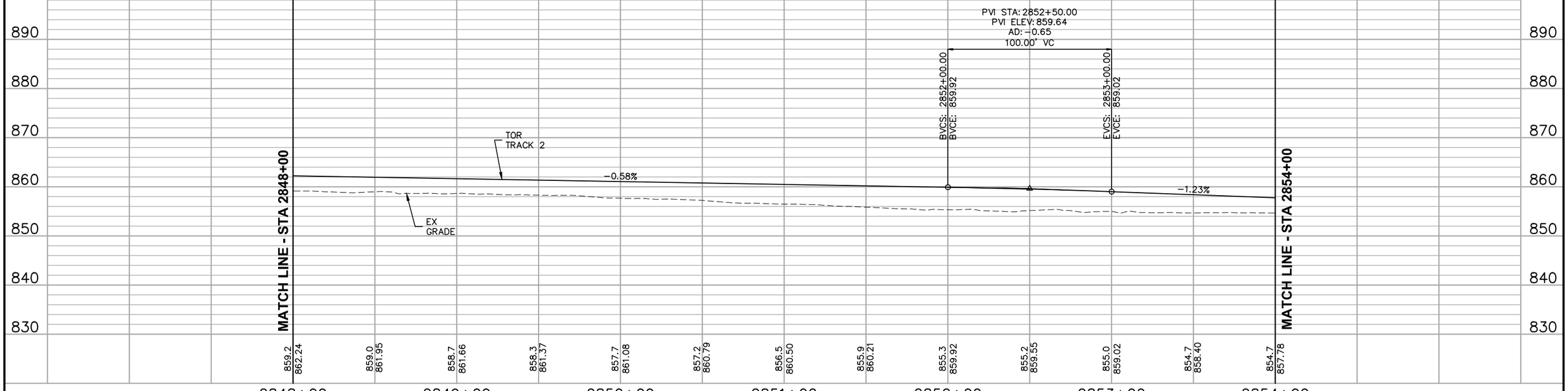

0 5 10 20
VERTICAL
0 15 30 60
HORIZONTAL
SCALE IN FEET

NO.	DATE	BY	CHECK	DESIGN	REVISION / SUBMITTAL

AECOM

90% SUBMISSION - 01/22/16

METROPOLITAN COUNCIL

SOUTHWEST Green Line LRT Extension

CIVIL - VOLUME 3B
TRACK
PLAN AND PROFILE
STA 2848+00 TO STA 2854+00

DISCIPLINE: TRACK

SHEET NAME: E4-TRK-PRF-002

SHEET 292 OF 420

Jan. 18 2016 09:49 am V:\3400_ADC\CAD\00_EAST\PLANSHEETS\TRACK\E4-TRK-PRF.dwg By: V-RasulL

CURVE NO. E4–102
R = 930.00'
Lc = 185.84'
Ls = 70.00'
Ea = 2.00"
Eu = 1.83"
V = 30 MPH

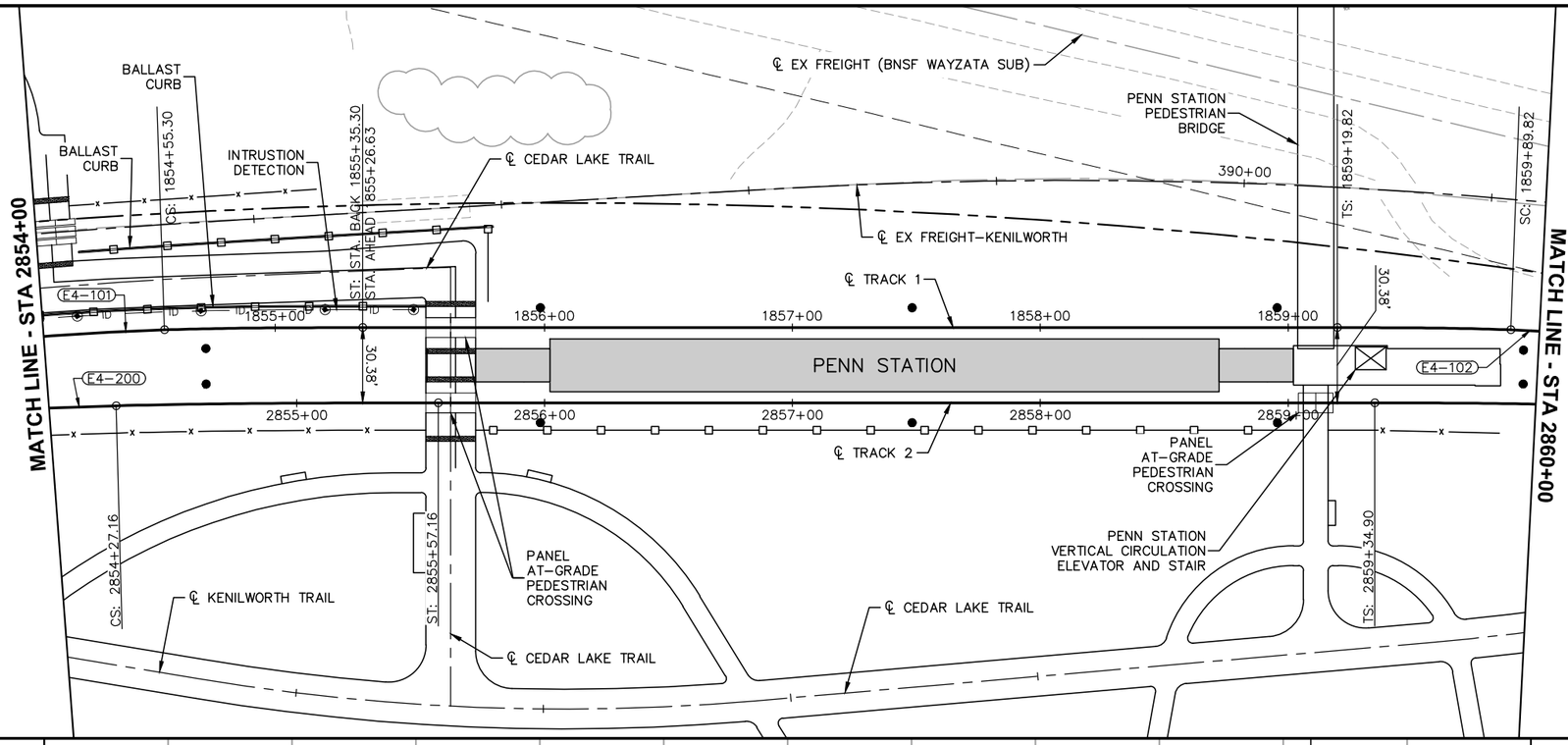

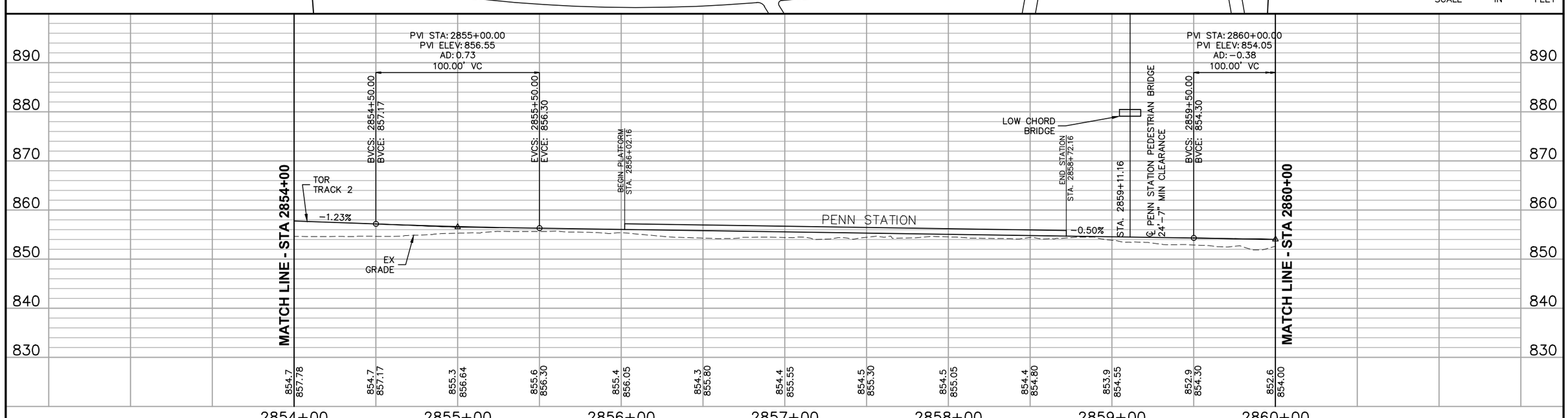

0 5 10 20
VERTICAL
0 15 30 60
HORIZONTAL
SCALE IN FEET

NO.	DATE	BY	CHECK	DESIGN	REVISION / SUBMITTAL

AECOM

90% SUBMISSION - 01/22/16

METROPOLITAN COUNCIL

SOUTHWEST Green Line LRT Extension

CIVIL - VOLUME 3B
TRACK
PLAN AND PROFILE
STA 2854+00 TO STA 2860+00

DISCIPLINE: TRACK

SHEET NAME: E4-TRK-PRF-003

SHEET 293 OF 420

Jan. 18 2016 09:50 am V:\3400_ADC\CAD\00_EAST\PLANSHEETS\TRACK\E4-TRK-PRF.dwg By: V-RasulL

CURVE NO. E4–202
R = 1,190.00'
Lc = 247.36'
Ls = 80.00'
Ea = 2.00"
Eu = 2.01"
V = 35 MPH

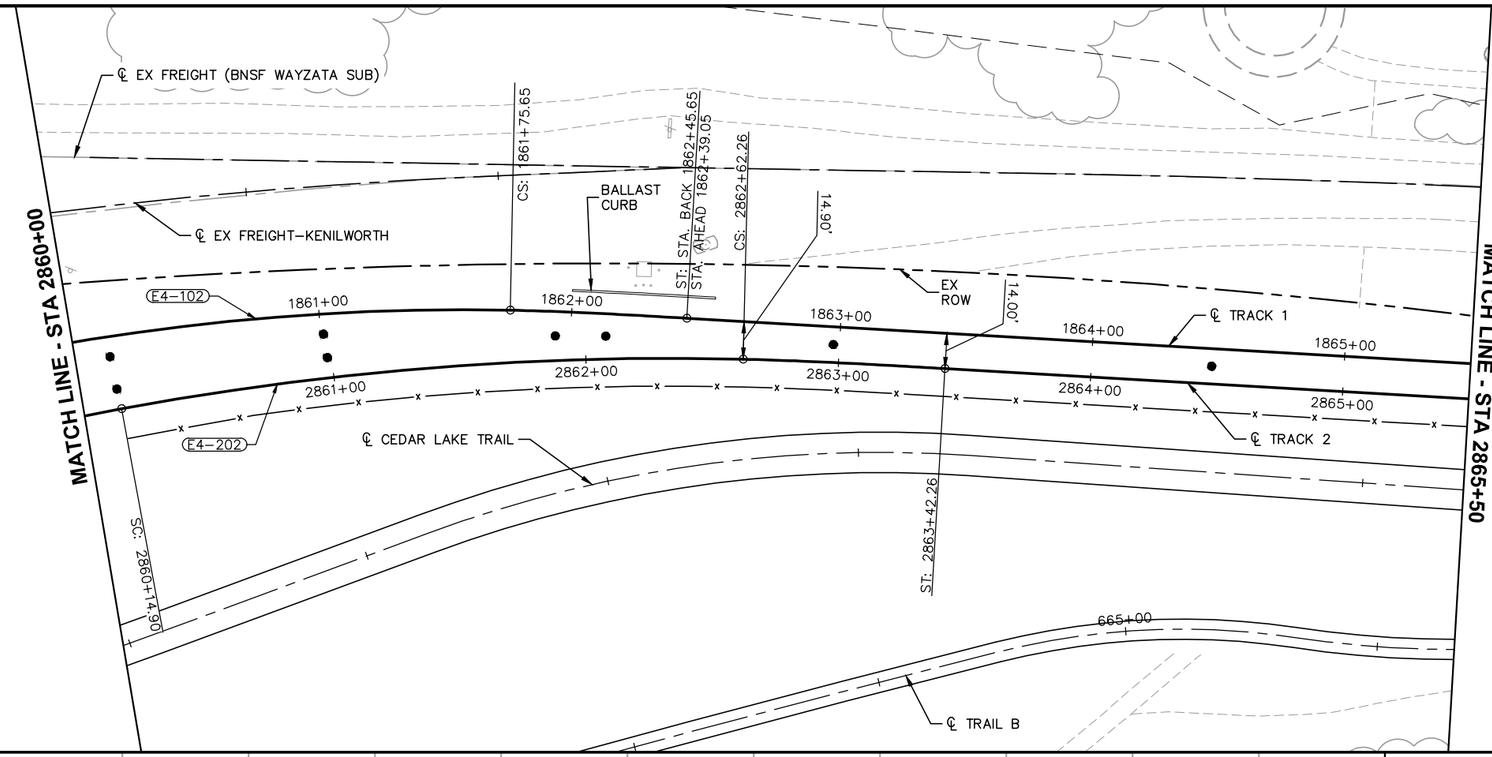

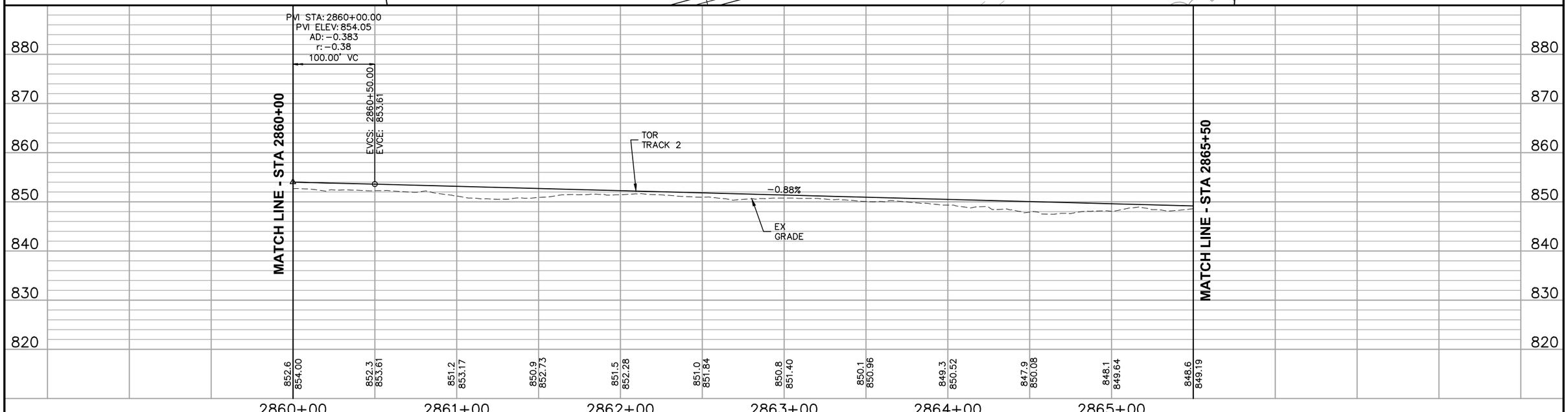

NO.	DATE	BY	CHECK	DESIGN	REVISION / SUBMITTAL

AECOM

90% SUBMISSION - 01/22/16

METROPOLITAN COUNCIL

SOUTHWEST Green Line LRT Extension

CIVIL - VOLUME 3B
TRACK
PLAN AND PROFILE
STA 2860+00 TO STA 2865+50

DISCIPLINE: TRACK

SHEET NAME: E4-TRK-PRF-004

SHEET 294 OF 420

Jan, 18 2016 09:51 am V:\3400_ADC\CAD\00_EAST\PLANSHEETS\TRACK\E4-TRK-PRF.dwg By: V-RasulL

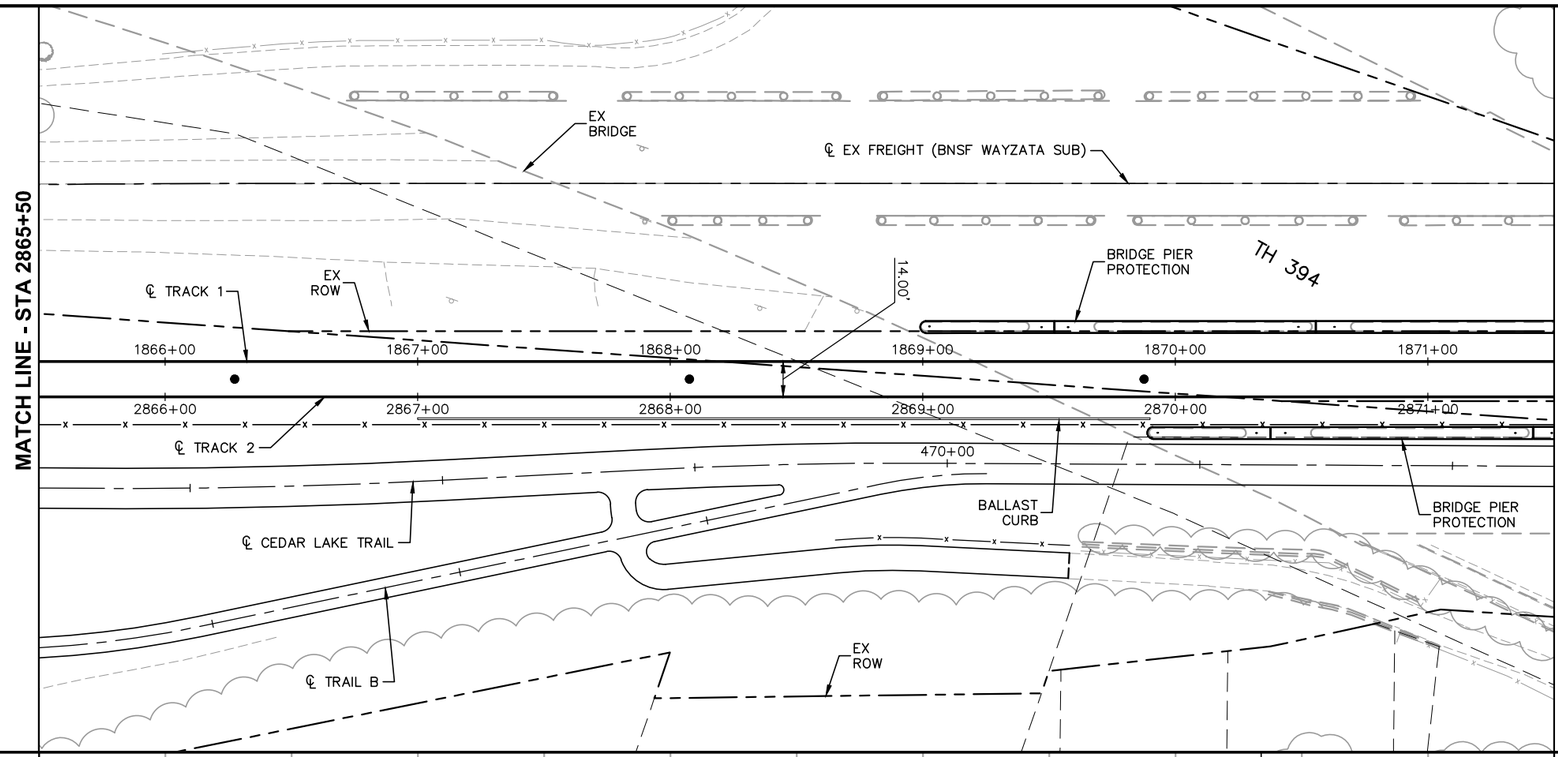

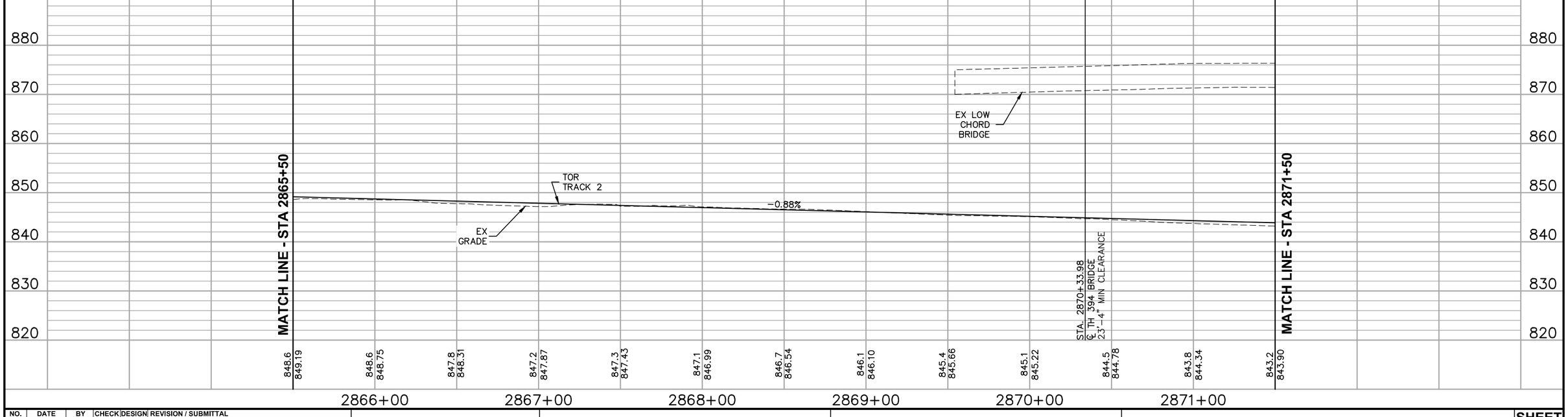

NO.	DATE	BY	CHECK	DESIGN	REVISION / SUBMITTAL

AECOM

90% SUBMISSION - 01/22/16

METROPOLITAN COUNCIL

SOUTHWEST Green Line LRT Extension

CIVIL - VOLUME 3B
TRACK
PLAN AND PROFILE
STA 2865+50 TO STA 2871+50

DISCIPLINE: TRACK

SHEET NAME: E4-TRK-PRF-005

SHEET 295 OF 420

Jan. 18 2016 09:52 am V:\3400_ADC\CAD\00_EAST\PLANSHEETS\TRACK\E4-TRK-PRF.dwg By: V-RasulL

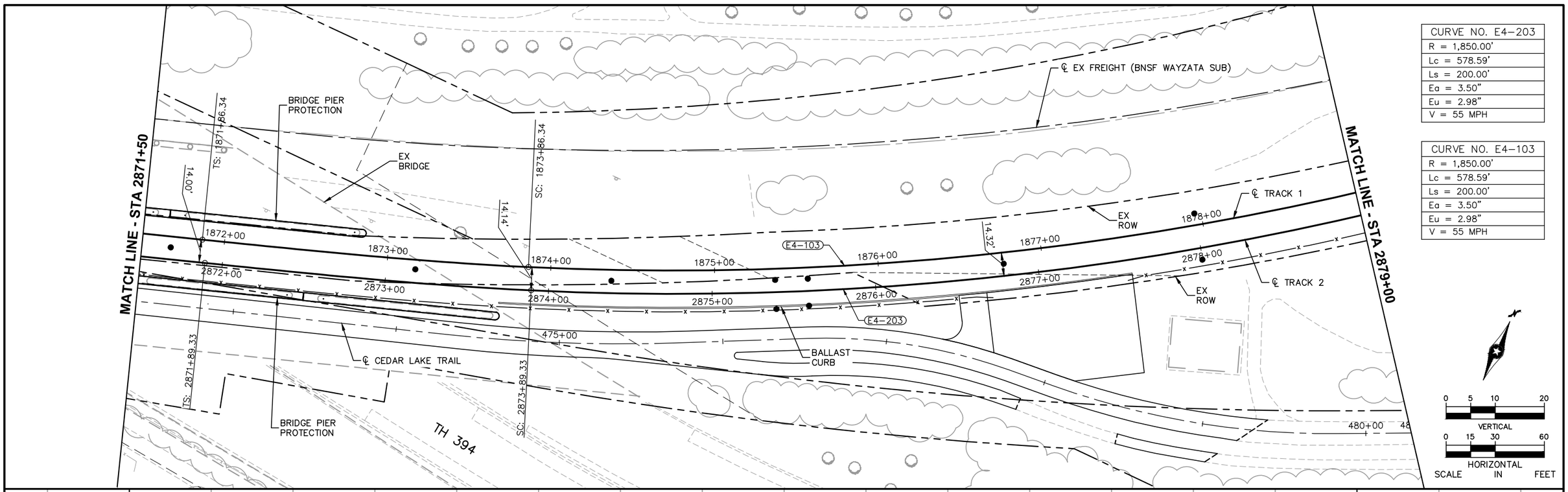

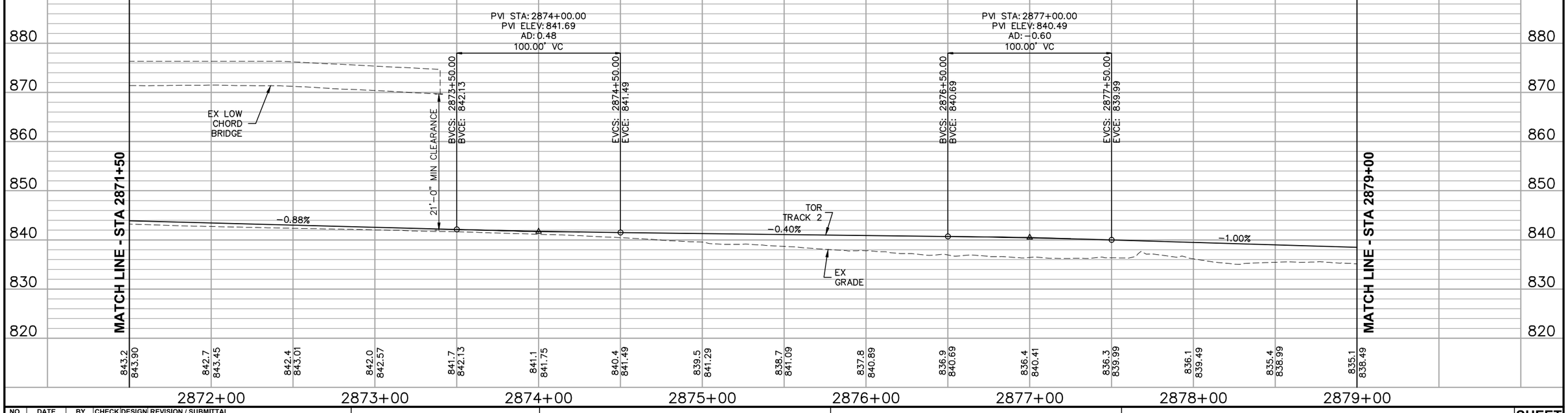

NO.	DATE	BY	CHECK	DESIGN	REVISION / SUBMITTAL

AECOM

90% SUBMISSION - 01/22/16

METROPOLITAN COUNCIL

SOUTHWEST Green Line LRT Extension

CIVIL - VOLUME 3B
TRACK
PLAN AND PROFILE
STA 2871+50 TO STA 2879+00

DISCIPLINE: TRACK

SHEET NAME: E4-TRK-PRF-006

SHEET 296 OF 420

Jan. 18 2016 09:53 am V:\3400_ADC\CAD\00_EAST\PLANSHEETS\TRACK\E4-TRK-PRF.dwg By: V-RasulL

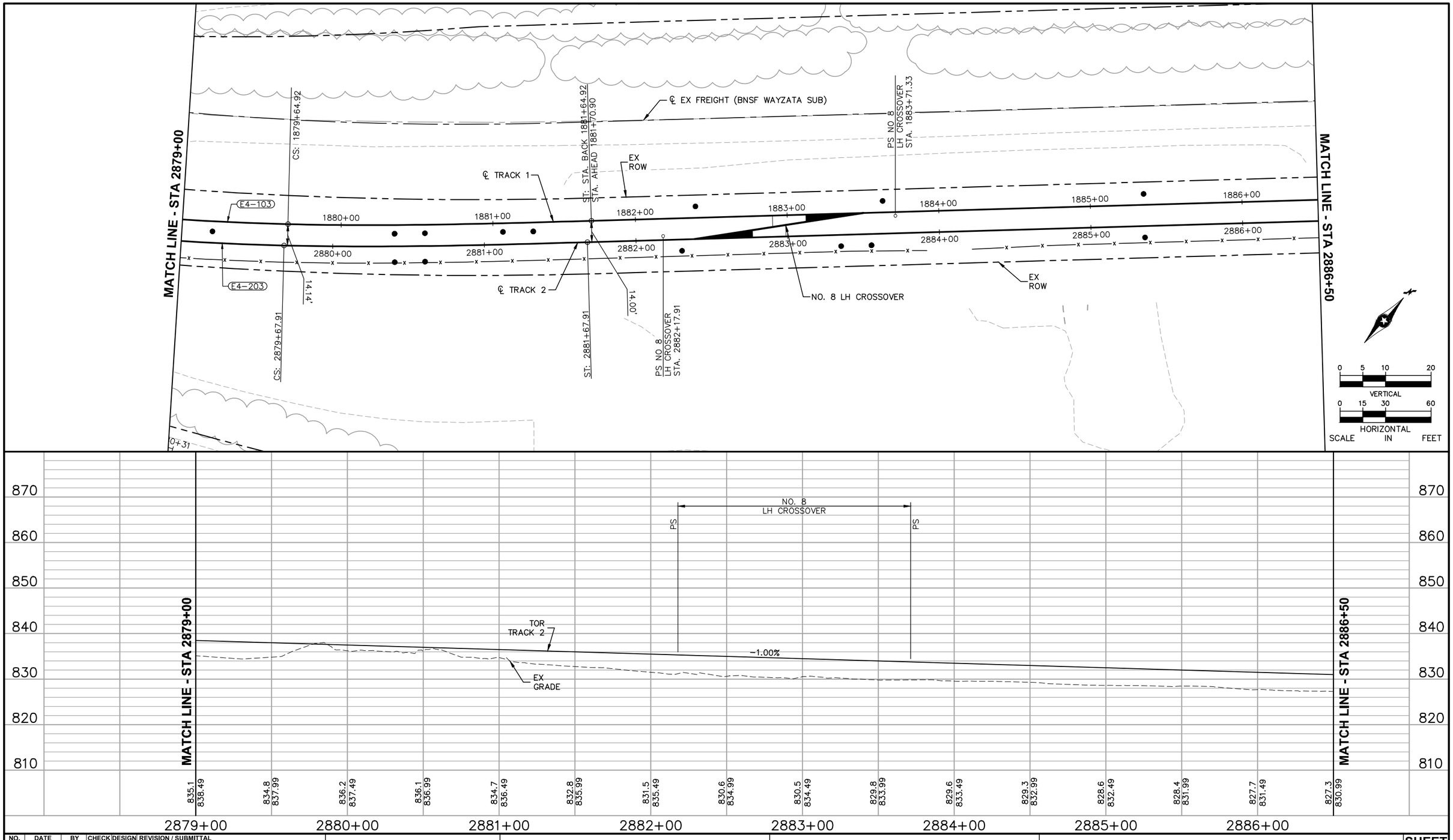

NO.	DATE	BY	CHECK	DESIGN	REVISION / SUBMITTAL

AECOM

90% SUBMISSION - 01/22/16

METROPOLITAN COUNCIL

SOUTHWEST Green Line LRT Extension

CIVIL - VOLUME 3B
TRACK
PLAN AND PROFILE
STA 2879+00 TO STA 2886+50

DISCIPLINE: TRACK

SHEET NAME: E4-TRK-PRF-007

SHEET 297 OF 420

Jan. 18 2016 09:54 am V:\3400_ADC\CAD\00_EAST\PLANSHEETS\TRACK\E4-TRK-PRF.dwg By: V-RasulL

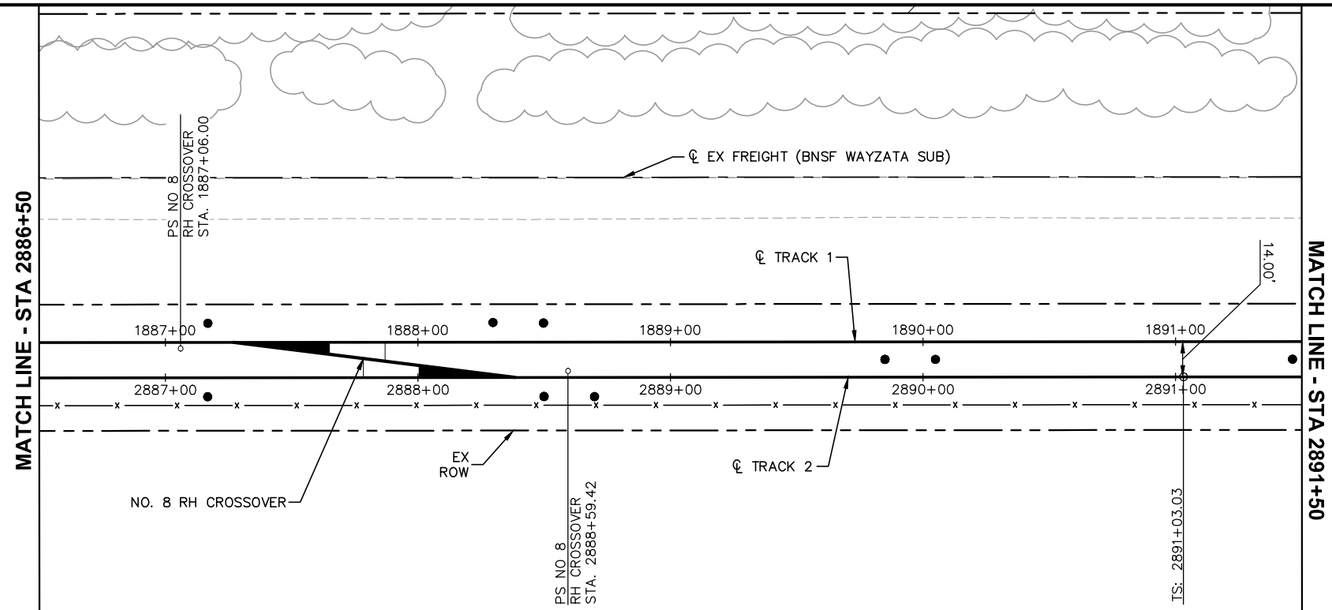

0 5 10 20
VERTICAL
0 15 30 60
HORIZONTAL
SCALE IN FEET

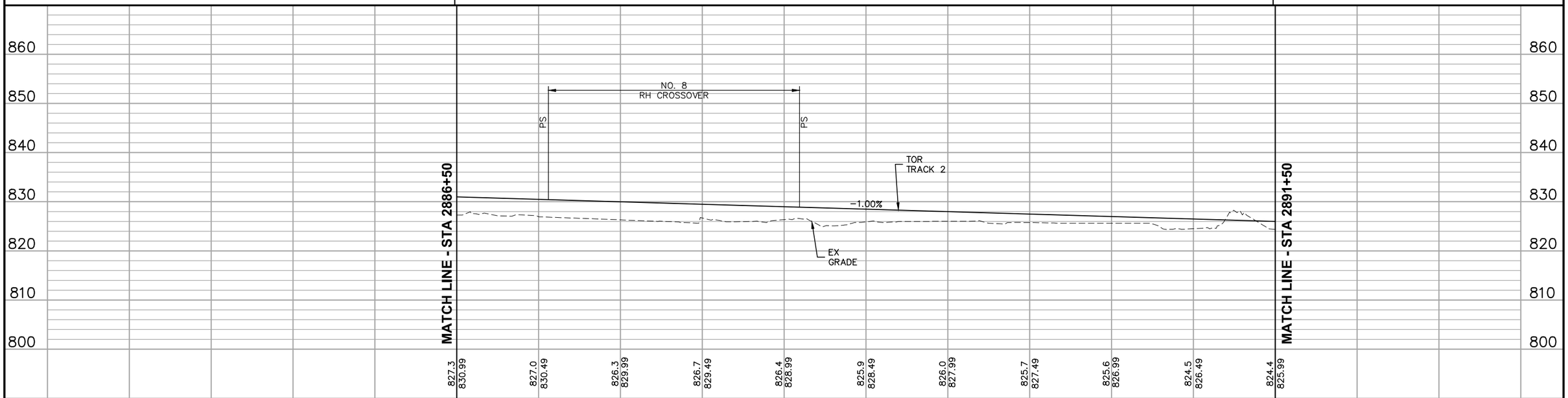

NO.	DATE	BY	CHECK	DESIGN	REVISION / SUBMITTAL

AECOM

90% SUBMISSION - 01/22/16

METROPOLITAN COUNCIL

SOUTHWEST Green Line LRT Extension

CIVIL - VOLUME 3B
TRACK
PLAN AND PROFILE
STA 2886+50 TO STA 2891+50

DISCIPLINE: TRACK

SHEET NAME: E4-TRK-PRF-008

SHEET 298 OF 420

Jan. 18 2016 09:55 am V:\3400_ADC\CAD\00_EAST\PLANSHEETS\TRACK\E4-TRK-PRF.dwg By: V-RasulL

CURVE NO. E4–204
R = 3,310.00'
Lc = 93.31'
Ls = 80.00'
Ea = 1.00"
Eu = 1.42"
V = 45 MPH

CURVE NO. E4–205
R = 3,310.00'
Lc = 93.31'
Ls = 80.00'
Ea = 1.00"
Eu = 1.42"
V = 45 MPH

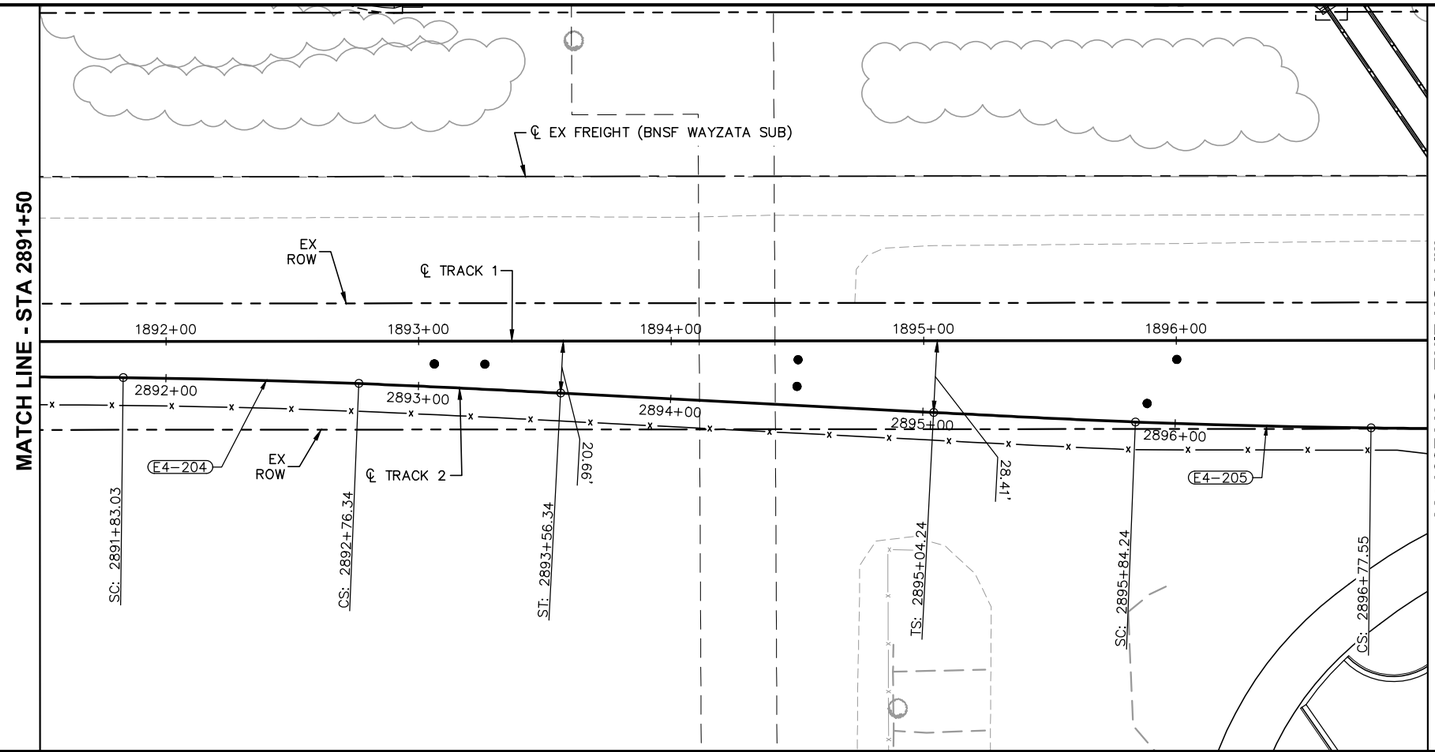

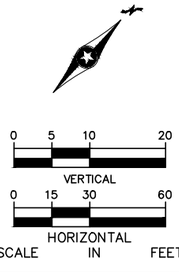

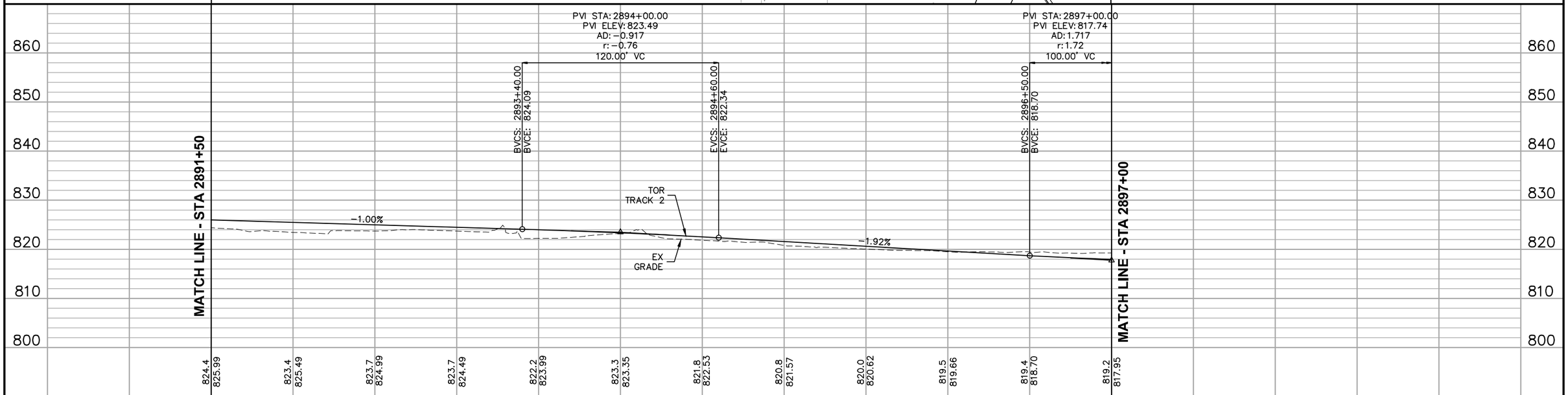

NO.	DATE	BY	CHECK	DESIGN	REVISION / SUBMITTAL

AECOM

90% SUBMISSION - 01/22/16

METROPOLITAN COUNCIL

SOUTHWEST Green Line LRT Extension

CIVIL - VOLUME 3B
TRACK
PLAN AND PROFILE
STA 2891+50 TO STA 2897+00

DISCIPLINE: TRACK

SHEET NAME: E4-TRK-PRF-009

SHEET 299 OF 420

Jan, 18 2016 09:56 am V:\3400_ADC\CAD\00_EAST\PLANSHEETS\TRACK\E4-TRK-PRF.dwg By: V-RasulL

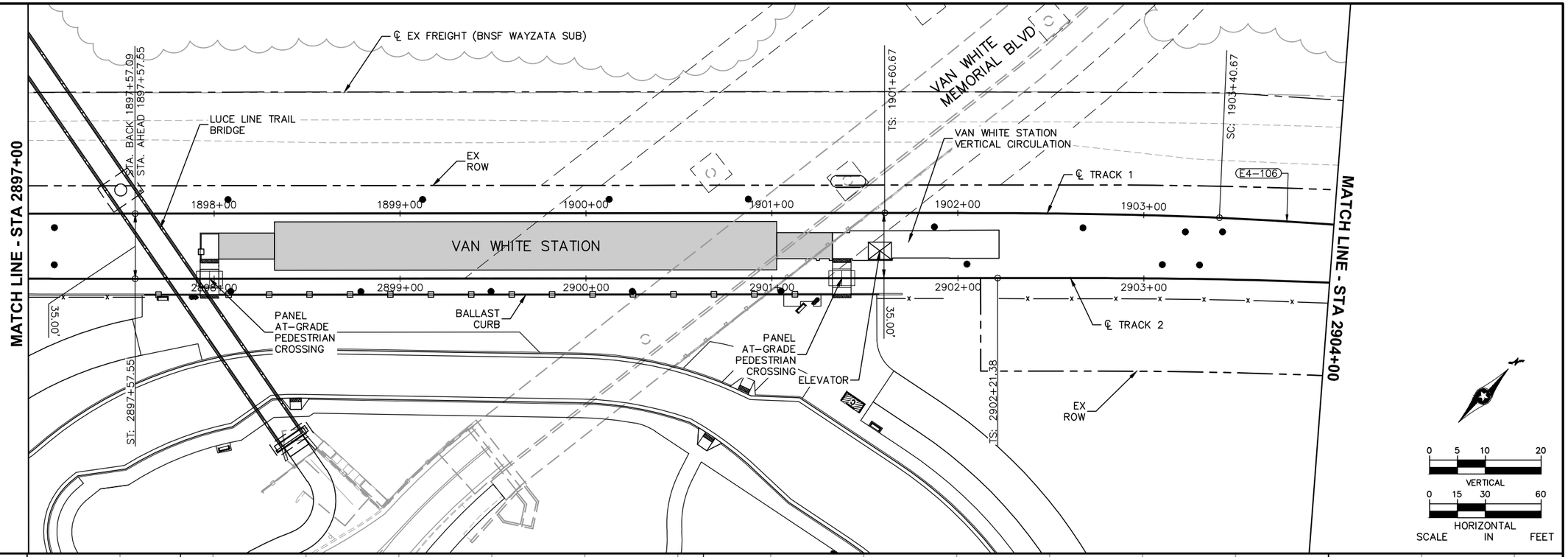

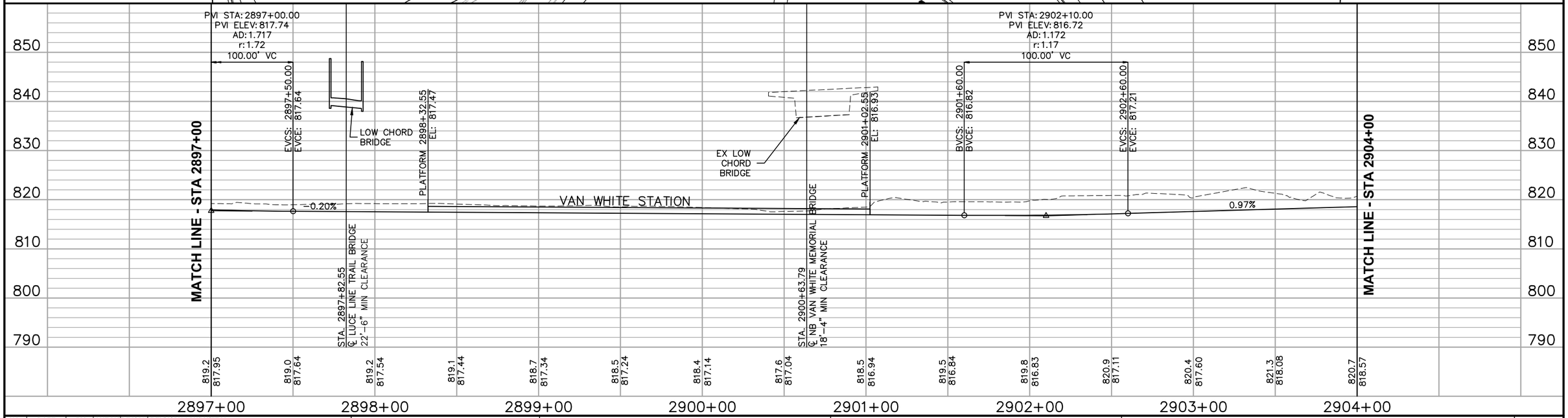

NO.	DATE	BY	CHECK	DESIGN	REVISION / SUBMITTAL

AECOM

90% SUBMISSION - 01/22/16

METROPOLITAN COUNCIL

SOUTHWEST Green Line LRT Extension

CIVIL - VOLUME 3B
TRACK
PLAN AND PROFILE
STA 2897+00 TO STA 2904+00

DISCIPLINE: TRACK

SHEET NAME: E4-TRK-PRF-010

SHEET 300 OF 420

Jan, 18 2016 09:56 am V:\3400_ADC\CAD\00_EAST\PLANSHEETS\TRACK\E4-TRK-PRF.dwg By: V-RasulL

CURVE NO. E4–206
R = 2,000.00'
Lc = 463.67'
Ls = 180.00'
Ea = 3.00"
Eu = 2.99"
V = 55 MPH

CURVE NO. E4–106
R = 2,000.00'
Lc = 463.37'
Ls = 180.00'
Ea = 3.00"
Eu = 2.99"
V = 55 MPH

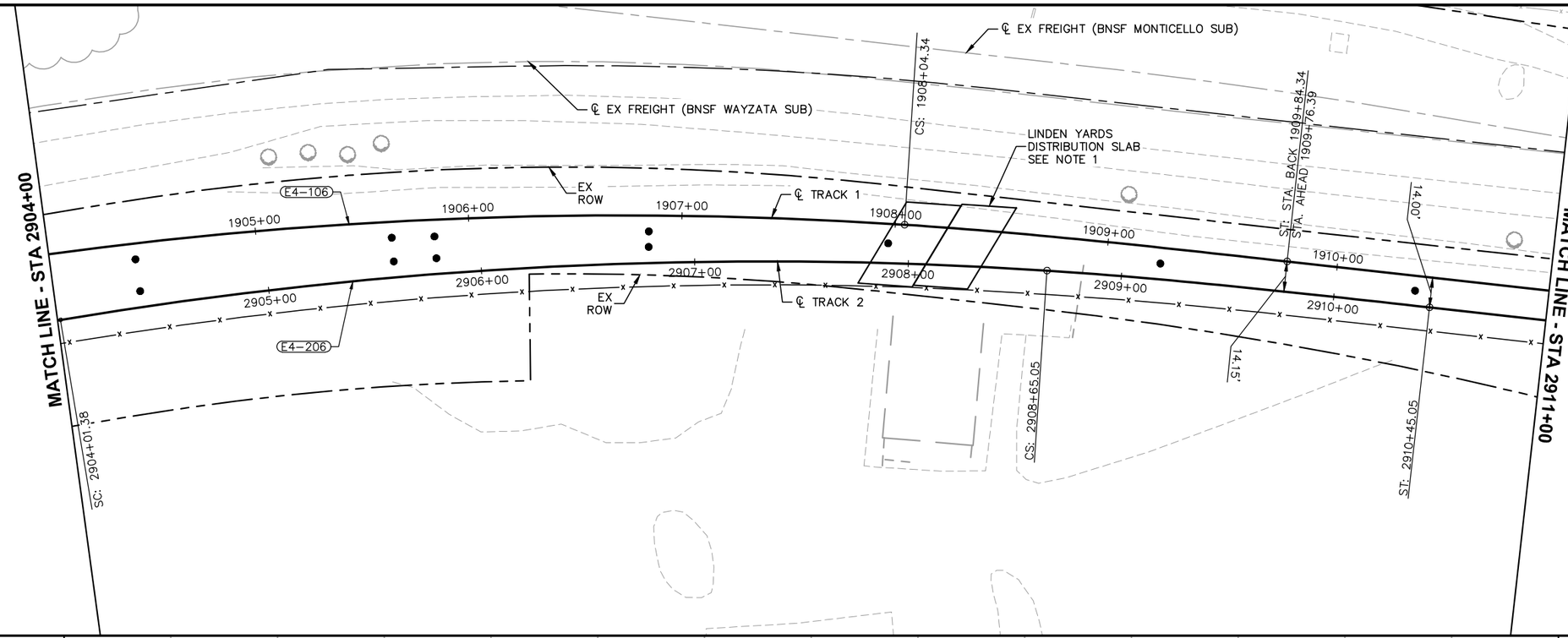

NOTE:

1. SEE DTL–016 AND DTL–017 FOR DETAILS.

0 5 10 20
VERTICAL
0 15 30 60
HORIZONTAL
SCALE IN FEET

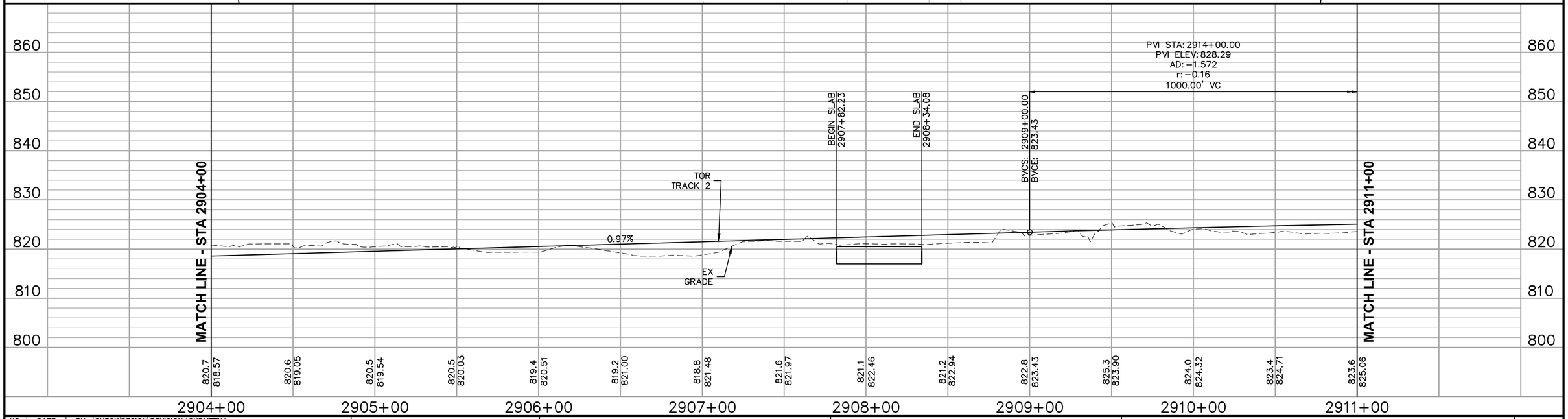

NO.	DATE	BY	CHECK	DESIGN	REVISION / SUBMITTAL

AECOM

90% SUBMISSION - 01/22/16

METROPOLITAN COUNCIL

SOUTHWEST Green Line LRT Extension

CIVIL - VOLUME 3B
TRACK
PLAN AND PROFILE
STA 2904+00 TO STA 2911+00

DISCIPLINE: TRACK

SHEET NAME: E4-TRK-PRF-011

SHEET 301 OF 420

Jan. 18 2016 09:57 am V:\3400_ADC\CAD\00_EAST\PLANSHEETS\TRACK\E4-TRK-PRF.dwg By: V-RasulL

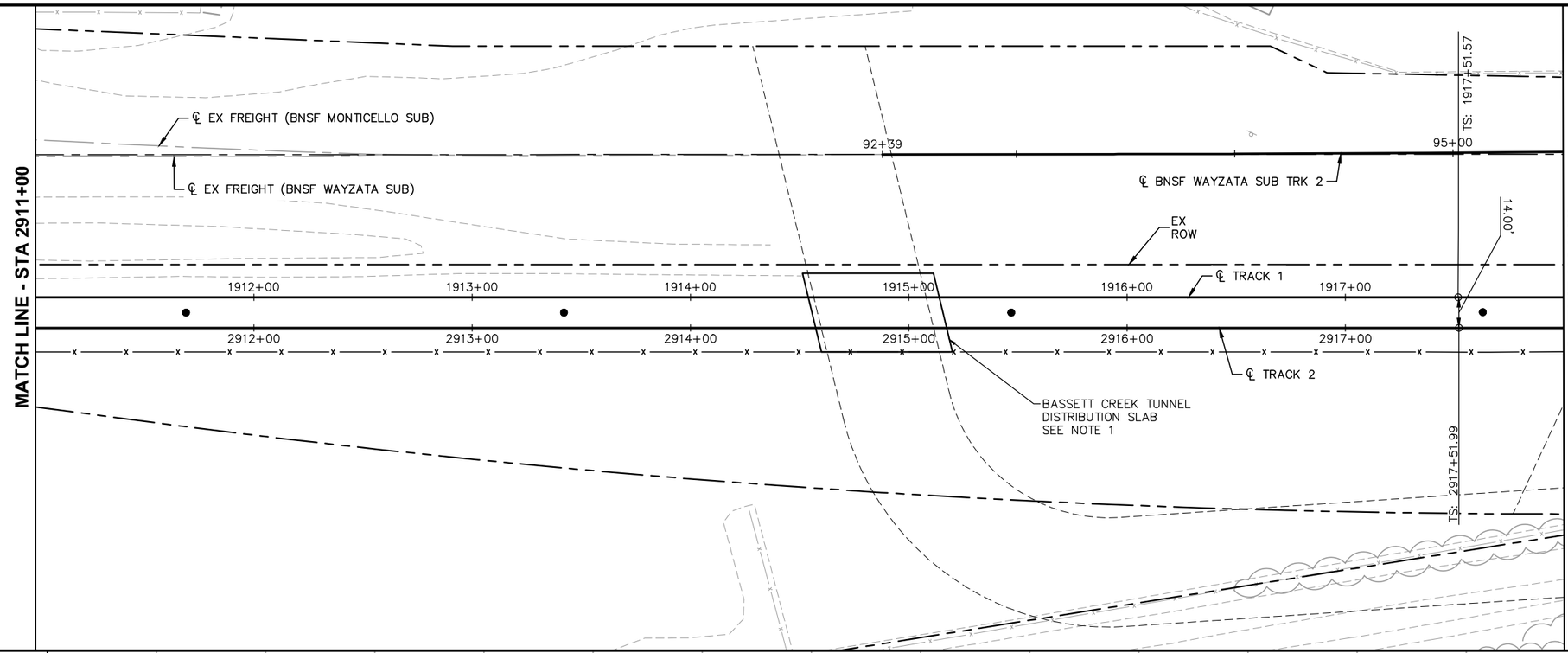

NOTE:

1. SEE DTL-014 AND DTL-015 FOR DETAILS.

0 5 10 20
VERTICAL
0 15 30 60
HORIZONTAL
SCALE IN FEET

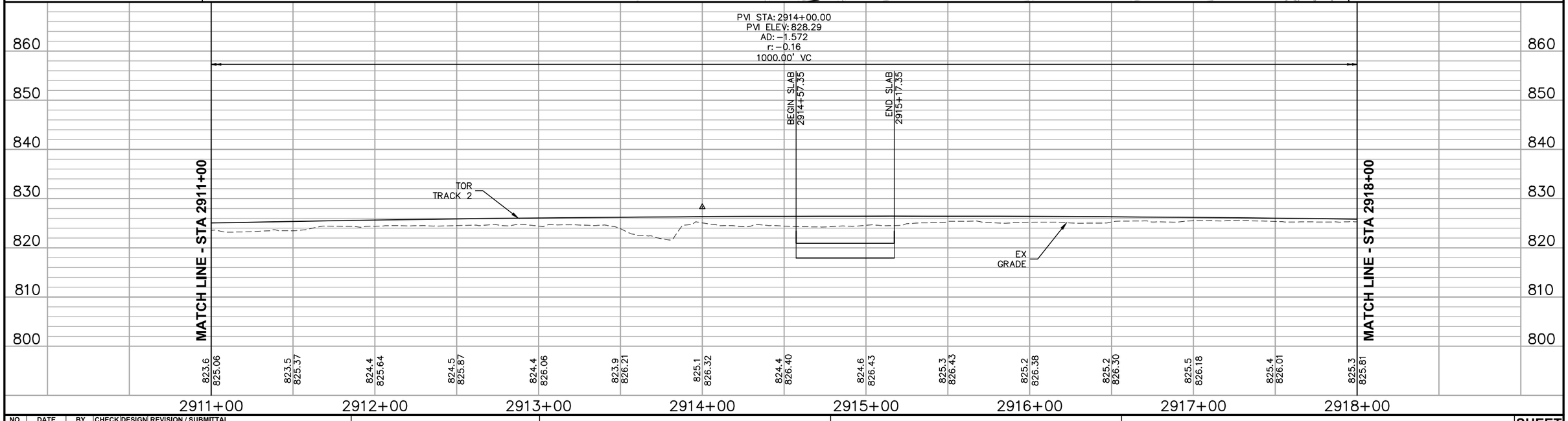

NO.	DATE	BY	CHECK	DESIGN	REVISION / SUBMITTAL

AECOM

90% SUBMISSION - 01/22/16

METROPOLITAN COUNCIL

SOUTHWEST Green Line LRT Extension

CIVIL - VOLUME 3B
TRACK
PLAN AND PROFILE
STA 2911+00 TO STA 2918+00

DISCIPLINE: TRACK

SHEET NAME: E4-TRK-PRF-012

SHEET 302 OF 420

Jan. 18 2016 09:58 am V:\3400_ADC\CAD\00_EAST\PLANSHEETS\TRACK\E4-TRK-PRF.dwg By: V-RasulL

CURVE NO. E4–207
R = 4,280.00'
Lc = 140.72'
Ls = 120.00'
Ea = 1.00"
Eu = 1.09"
V = 55 MPH

CURVE NO. E4–107
R = 4,280.00'
Lc = 140.72'
Ls = 120.00'
Ea = 1.00"
Eu = 1.09"
V = 55 MPH

CURVE NO. E4–208
R = 4,280.00'
Lc = 196.84'
Ls = 120.00'
Ea = 1.00"
Eu = 1.09"
V = 55 MPH

CURVE NO. E4–108
R = 4,280.00'
Lc = 196.84'
Ls = 120.00'
Ea = 1.00"
Eu = 1.09"
V = 55 MPH

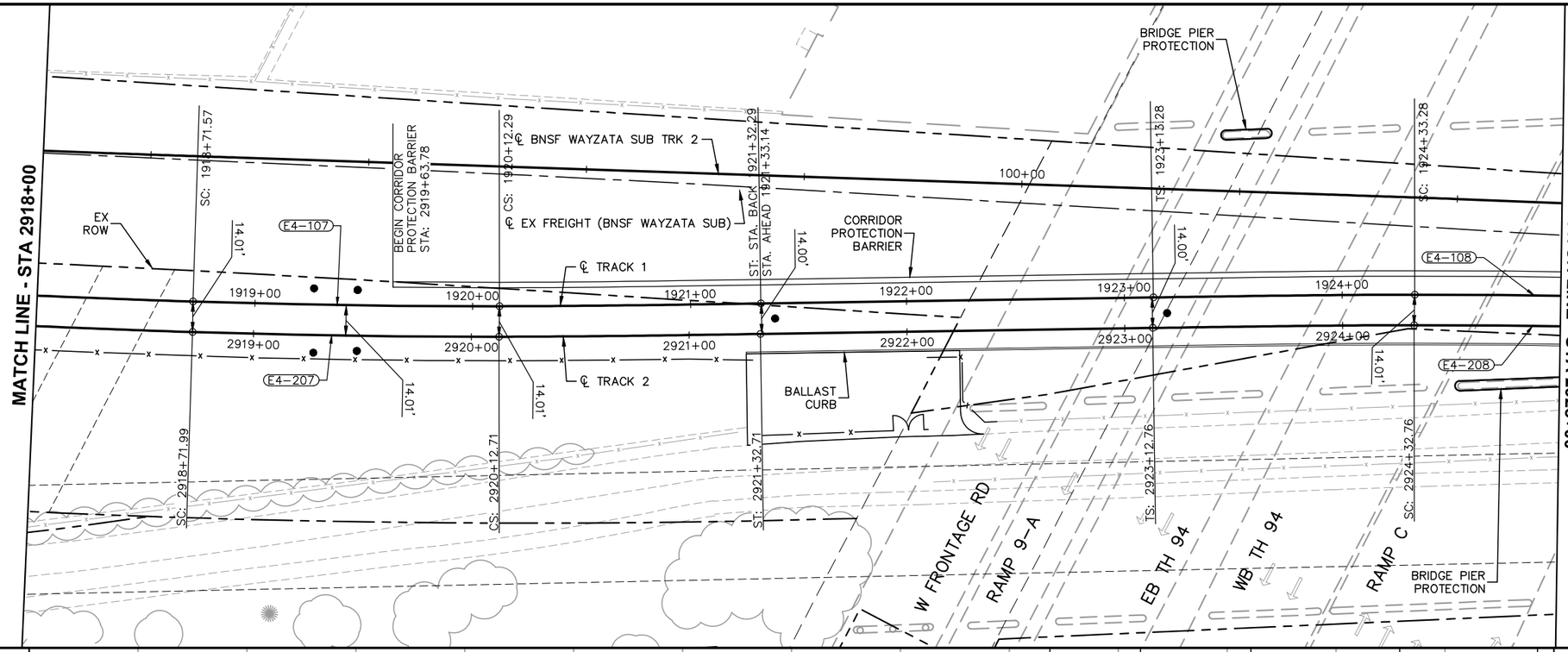

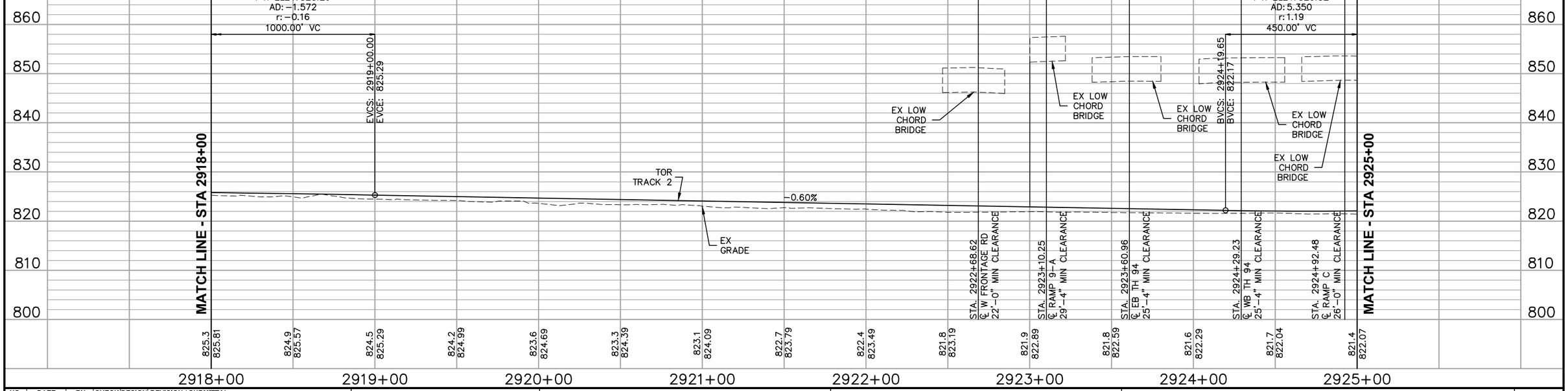

0 5 10 20
VERTICAL
0 15 30 60
HORIZONTAL
SCALE IN FEET

NO.	DATE	BY	CHECK	DESIGN	REVISION / SUBMITTAL

AECOM

90% SUBMISSION - 01/22/16

METROPOLITAN COUNCIL

SOUTHWEST Green Line LRT Extension

CIVIL - VOLUME 3B
TRACK
PLAN AND PROFILE
STA 2918+00 TO STA 2925+00

SHEET 303 OF 420

DISCIPLINE: TRACK

SHEET NAME: E4-TRK-PRF-013

Jan, 18 2016 09:59 am V:\3400_ADC\CAD\00_EAST\PLANSHEETS\TRACK\E4-TRK-PRF.dwg By: V-RasulL

NOTE:

1. SEE SHEET E4-TRK-PRF-014A FOR TRACK 1 PROFILE.

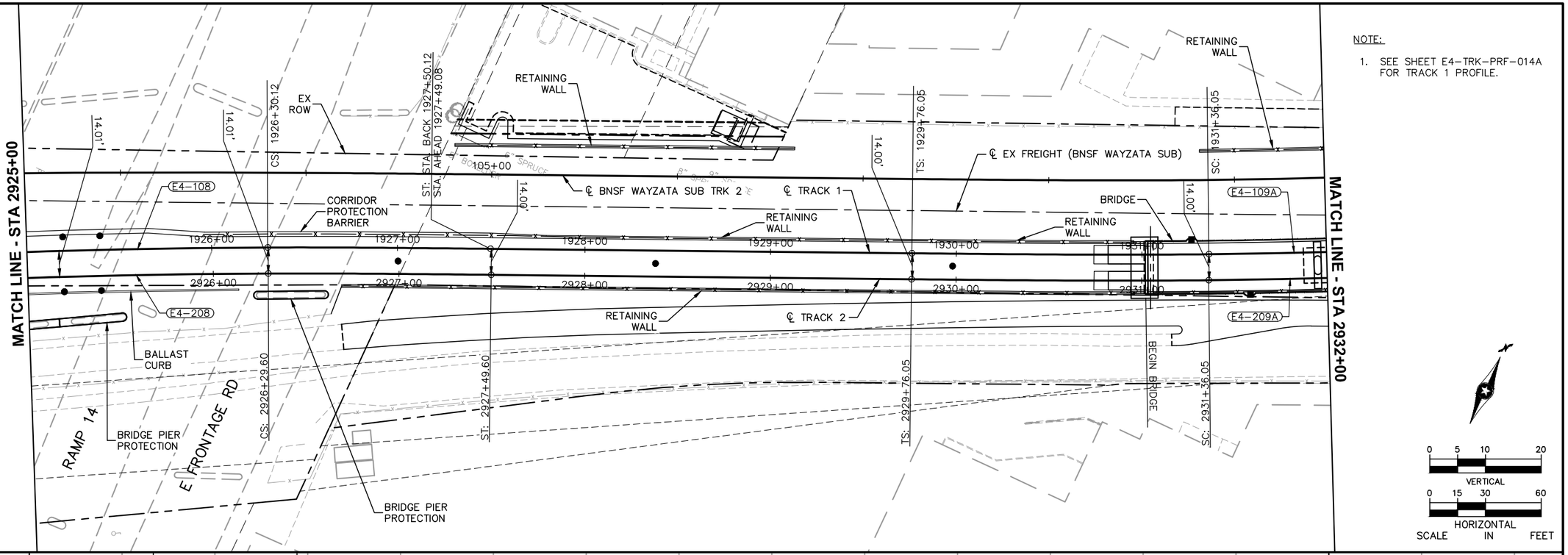

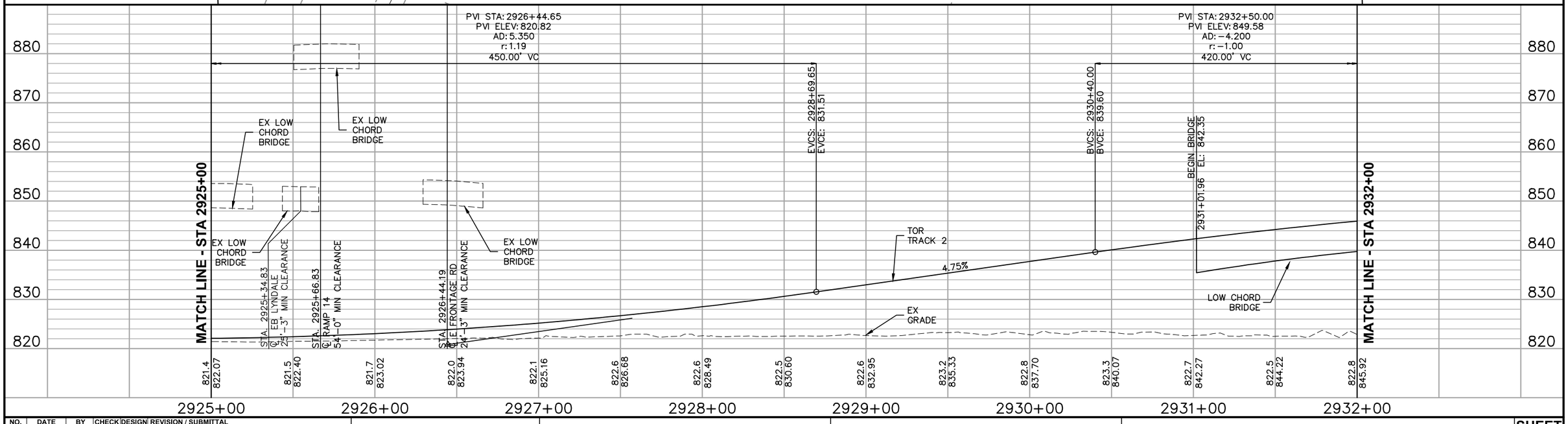

NO.	DATE	BY	CHECK	DESIGN	REVISION / SUBMITTAL

AECOM

90% SUBMISSION - 01/22/16

METROPOLITAN COUNCIL

SOUTHWEST Green Line LRT Extension

CIVIL - VOLUME 3B
TRACK
PLAN AND PROFILE
STA 2925+00 TO STA 2932+00

DISCIPLINE: E4 PLAN AND PROFILE

SHEET NAME: E4-TRK-PRF-014

SHEET 304 OF 420

Jan, 18 2016 10:00 am V:\3400_ADC\CAD\00_EAST\PLANSHEETS\TRACK\E4-TRK-PRF.dwg By: V-RasulL

SEE SHEET E4-TRK-PRF-014 FOR PLAN VIEW

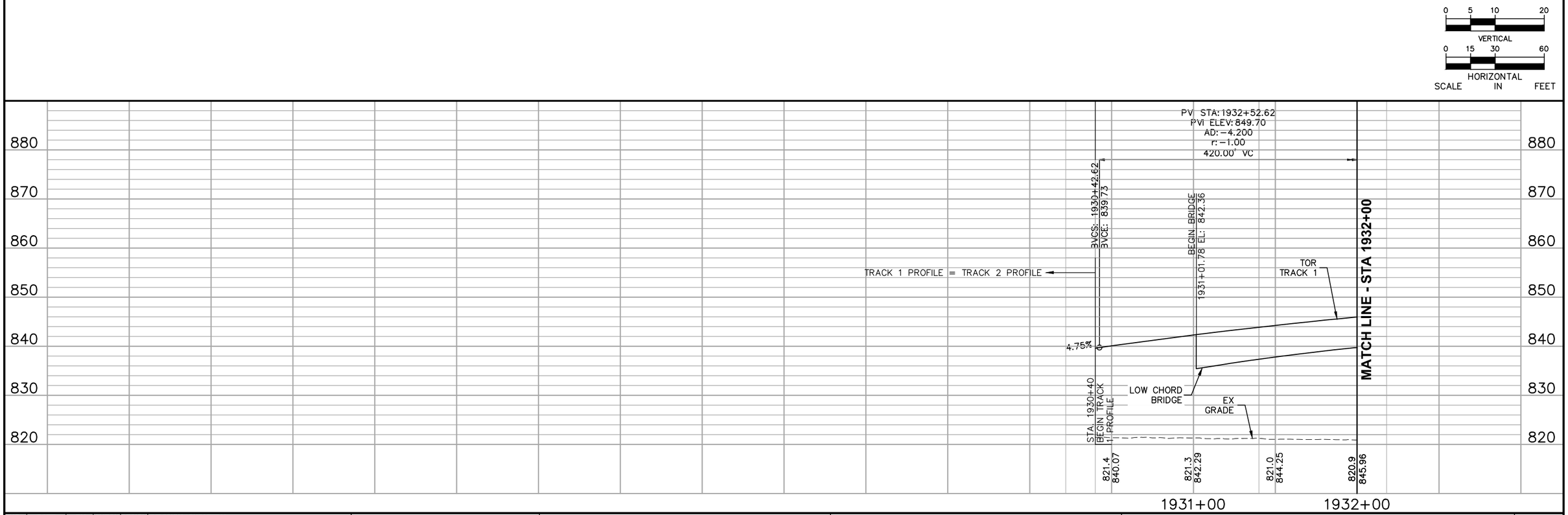

NO.	DATE	BY	CHECK	DESIGN	REVISION / SUBMITTAL

AECOM

90% SUBMISSION - 01/22/16

METROPOLITAN COUNCIL

SOUTHWEST Green Line LRT Extension

CIVIL - VOLUME 3B
TRACK
PLAN AND PROFILE
STA 1930+40 TO STA 1932+00

DISCIPLINE: TRACK

SHEET NAME: E4-TRK-PRF-014A

SHEET 305 OF 420

Jan. 18 2016 10:00 am V:\3400_ADC\CAD\00_EAST\PLANSHEETS\TRACK\E4-TRK-PRF-WB.dwg By: V-RasulL

CURVE NO. E4–209A
R = 3,804.00'
Lc = 612.52'
Ls_1 = 160.00'
Ls_2 = 30.00'
Ea = 0.00"
Eu = 2.60" / 0.10"
V = 50 / 10 MPH

CURVE NO. E3–109A
R = 3,790.00'
Lc = 609.91'
Ls_1 = 160.00'
Ls_2 = 30.00'
Ea = 0.00"
Eu = 2.61" / 0.10"
V = 50 / 10 MPH

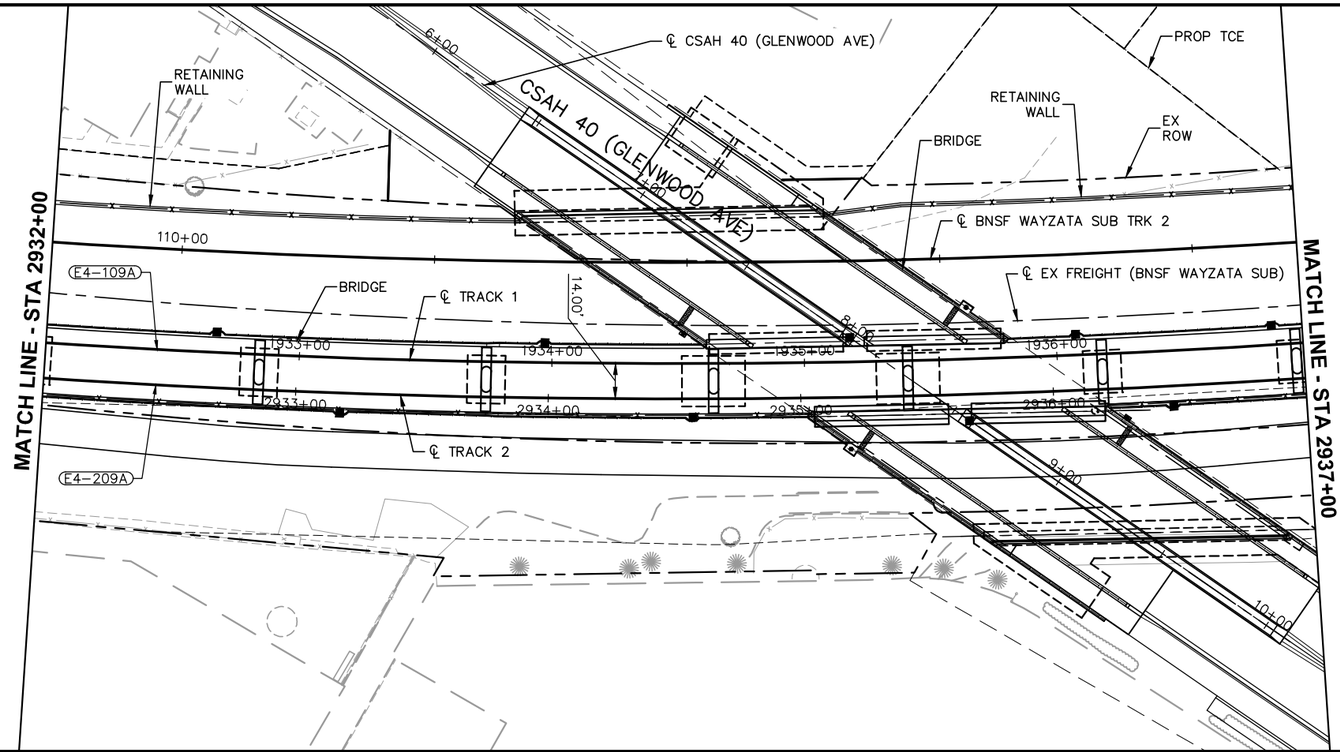

NOTE:

1. SEE SHEET E4–TRK–PRF–015A FOR TRACK 1 PROFILE.

0 5 10 20
VERTICAL
0 15 30 60
HORIZONTAL
SCALE IN FEET

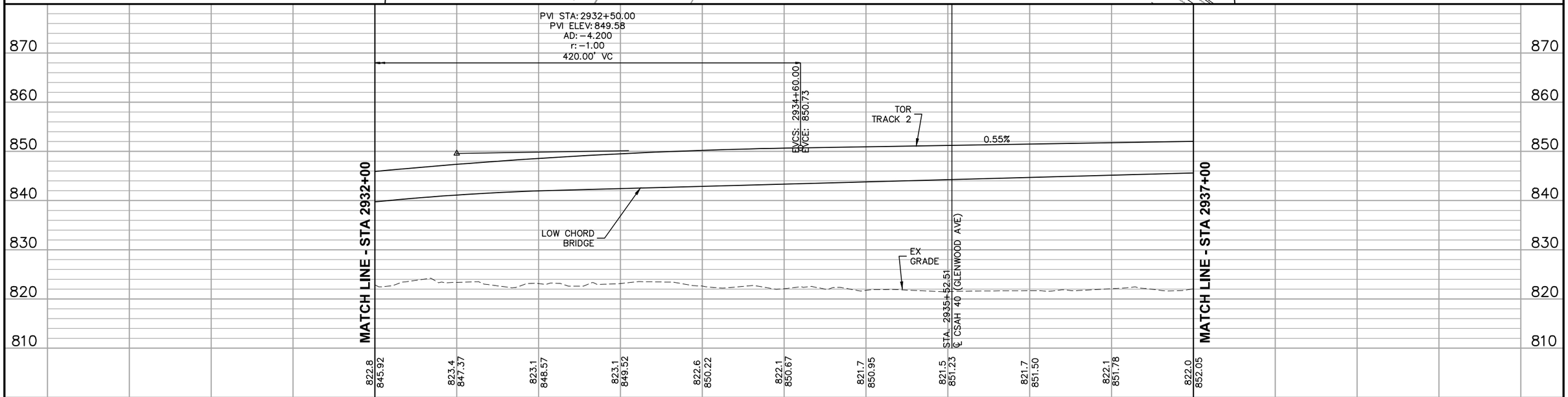

NO.	DATE	BY	CHECK	DESIGN	REVISION / SUBMITTAL

AECOM

90% SUBMISSION - 01/22/16

METROPOLITAN COUNCIL

SOUTHWEST Green Line LRT Extension

CIVIL - VOLUME 3B
TRACK
PLAN AND PROFILE
STA 2932+00 TO STA 2937+00

DISCIPLINE: TRACK

SHEET NAME: E4-TRK-PRF-015

SHEET 306 OF 420

Jan, 18 2016 10:04 am V:\3400_ADC\CAD\00_EAST\PLANSHEETS\TRACK\E4–TRK–PRF.dwg By: V–RasulL

SEE SHEET E4-TRK-PRF-015 FOR PLAN VIEW

0 5 10 20
VERTICAL
0 15 30 60
HORIZONTAL
SCALE IN FEET

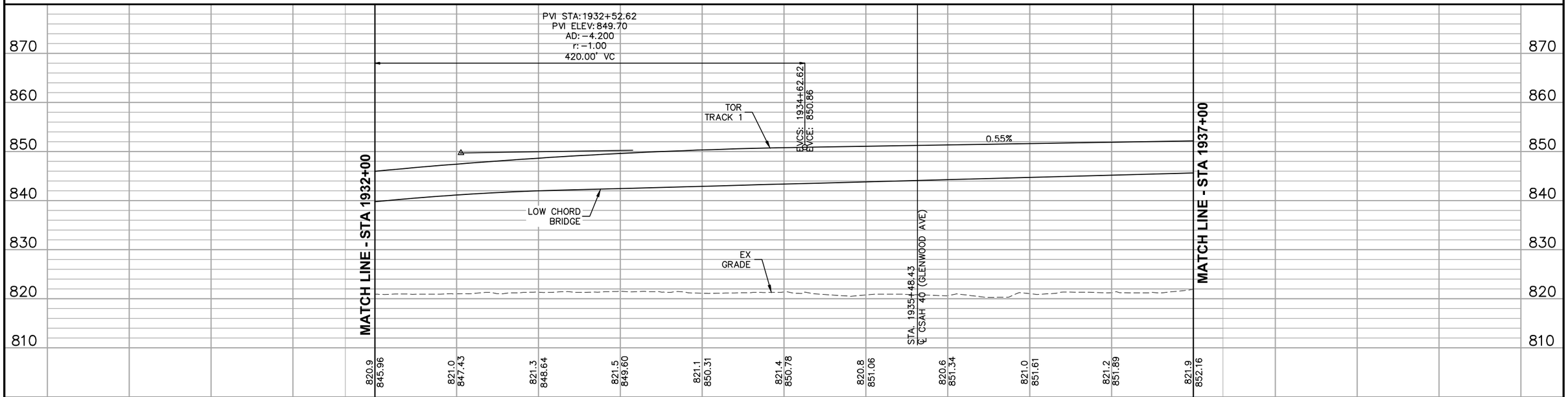

NO.	DATE	BY	CHECK	DESIGN	REVISION / SUBMITTAL

AECOM

90% SUBMISSION - 01/22/16

METROPOLITAN COUNCIL

SOUTHWEST Green Line LRT Extension

CIVIL - VOLUME 3B
TRACK
PLAN AND PROFILE
STA 1932+00 TO STA 1937+00

DISCIPLINE: TRACK

SHEET NAME: E4-TRK-PRF-015A

SHEET 307 OF 420

Jan. 18 2016 10:04 am V:\3400_ADC\CAD\00_EAST\PLANSHEETS\TRACK\E4-TRK-PRF-WB.dwg By: V-RasulL

CURVE NO. E4–209B
R = 244.00'
Lc = 360.51'
Ls = 30.00'
Ea = 0.00"
Eu = 1.62"
V = 10 MPH

CURVE NO. E4–109B
R = 230.00'
Lc = 338.11'
Ls = 30.00'
Ea = 0.00"
Eu = 1.72"
V = 10 MPH

NOTE:

1. SEE SHEET E4–TRK–PRF–016A FOR TRACK 1 PROFILE.

CURVE NO. E4–210
R = 170.00'
Lc = 78.06'
Ls = 30.00'
Ea = 0.75"
Eu = 1.58"
V = 10 MPH

CURVE NO. E4–110
R = 184.00'
Lc = 86.96'
Ls = 30.00'
Ea = 0.75"
Eu = 1.40"
V = 10 MPH

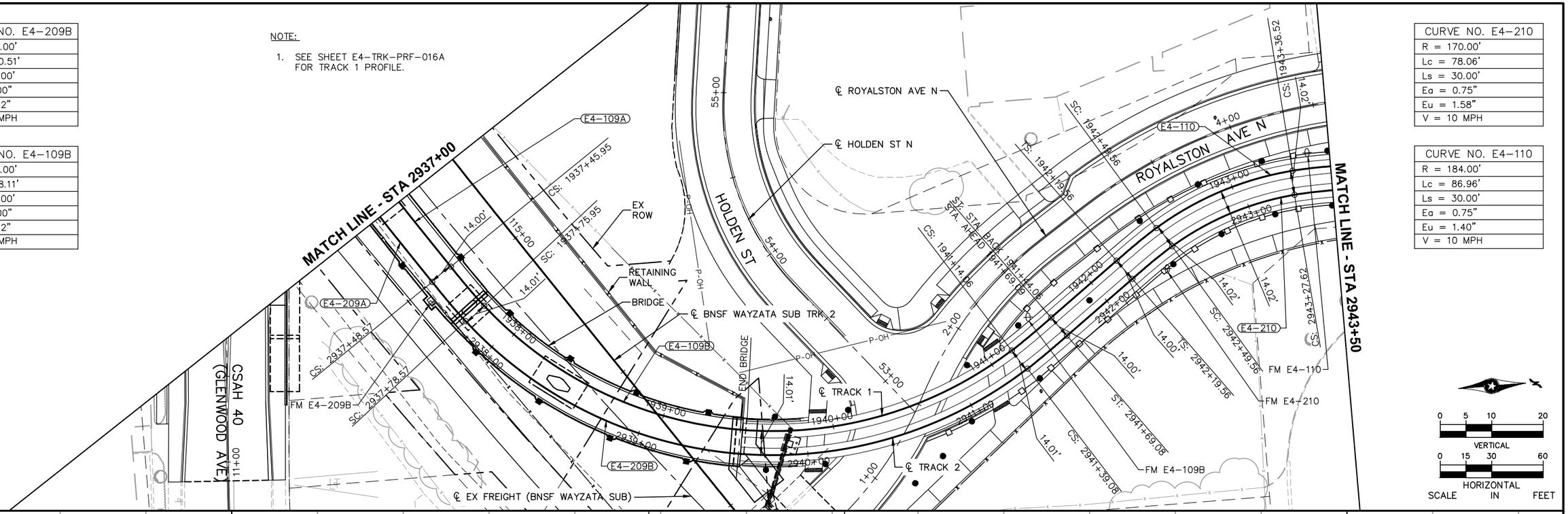

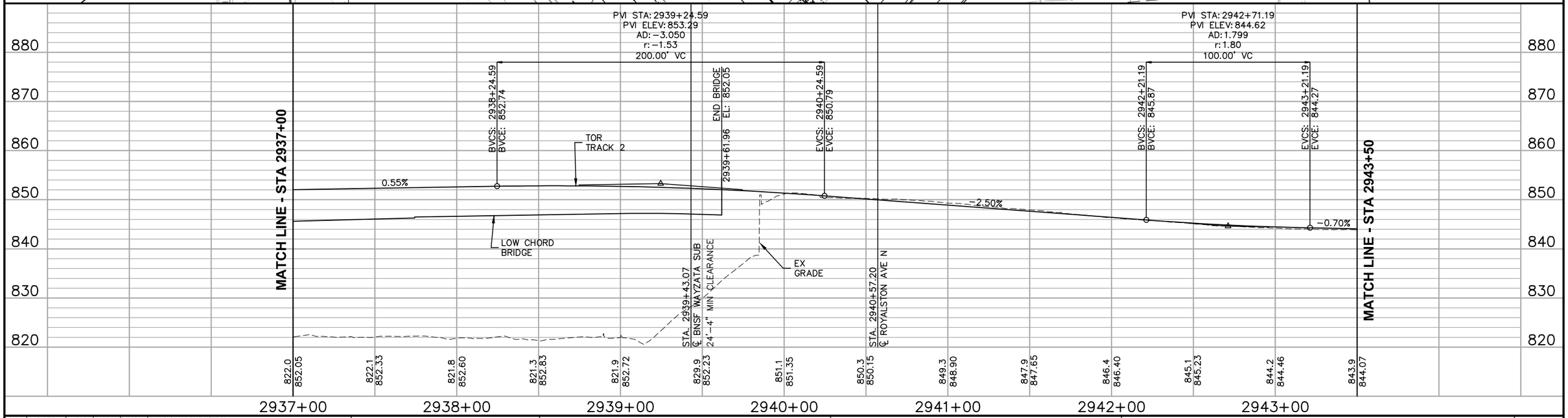

NO.	DATE	BY	CHECK	DESIGN	REVISION / SUBMITTAL

AECOM

90% SUBMISSION - 01/22/16

METROPOLITAN COUNCIL

SOUTHWEST Green Line LRT Extension

CIVIL - VOLUME 3B
TRACK
PLAN AND PROFILE
STA 2937+00 TO STA 2943+50

SHEET 308 OF 420

DISCIPLINE: TRACK

SHEET NAME: E4-TRK-PRF-016

Jan, 18 2016 10:09 am V:\3400_ADC\CAD\00_EAST\PLANSHEETS\TRACK\E4–TRK–PRF.dwg By: V–RasulL

SEE SHEET E4-TRK-PRF-016 FOR PLAN VIEW

0 5 10 20
VERTICAL
0 15 30 60
HORIZONTAL
SCALE IN FEET

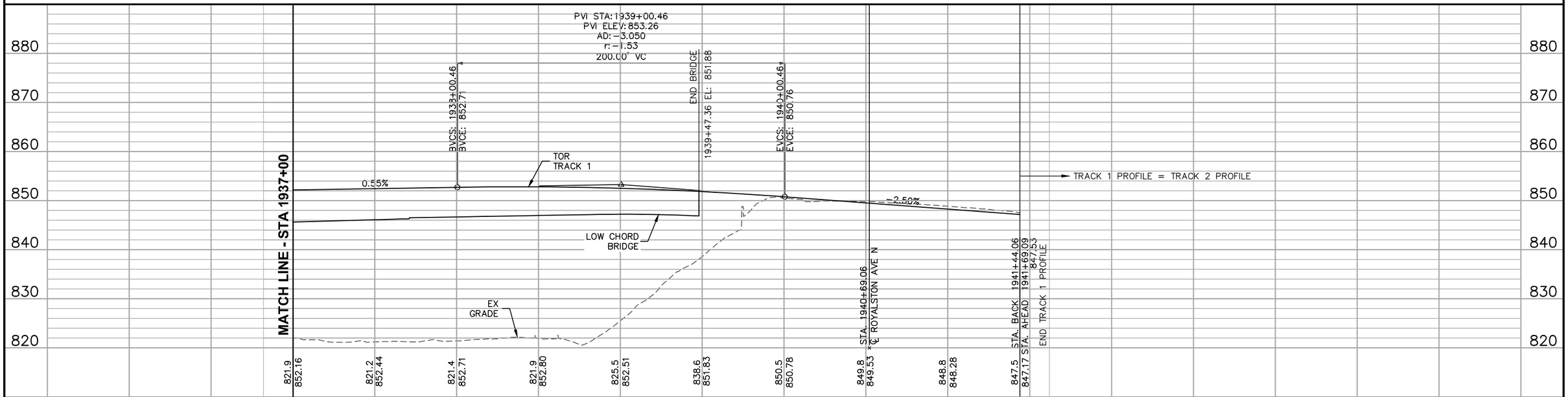

NO.	DATE	BY	CHECK	DESIGN	REVISION / SUBMITTAL

AECOM

90% SUBMISSION - 01/22/16

METROPOLITAN COUNCIL

SOUTHWEST Green Line LRT Extension

CIVIL - VOLUME 3B
TRACK
PLAN AND PROFILE
STA 1937+00 TO STA 1941+69.09

DISCIPLINE: TRACK

SHEET NAME: E4-TRK-PRF-016A

SHEET 309 OF 420

Jan. 18 2016 10:09 am V:\3400_ADC\CAD\00_EAST\PLANSHEETS\TRACK\E4-TRK-PRF-WB.dwg By: V-RasulL

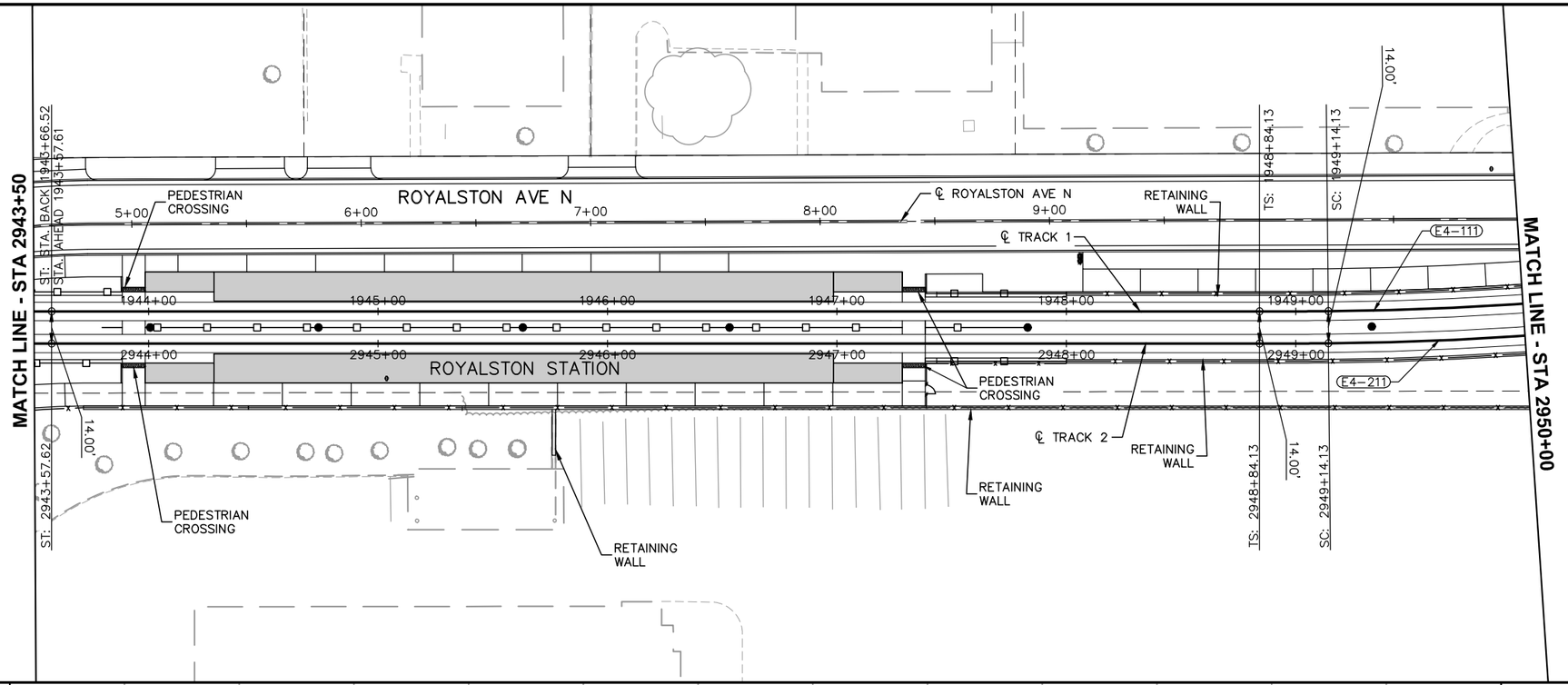

CURVE NO. E4–211
R = 1,514.00'
Lc = 109.54'
Ls = 30.00'
Ea = 0.75"
Eu = 0.88"
V = 25 MPH

CURVE NO. E4–111
R = 1,500.00'
Lc = 108.25'
Ls = 30.00'
Ea = 0.75"
Eu = 0.90"
V = 25 MPH

0 5 10 20
VERTICAL
0 15 30 60
HORIZONTAL
SCALE IN FEET

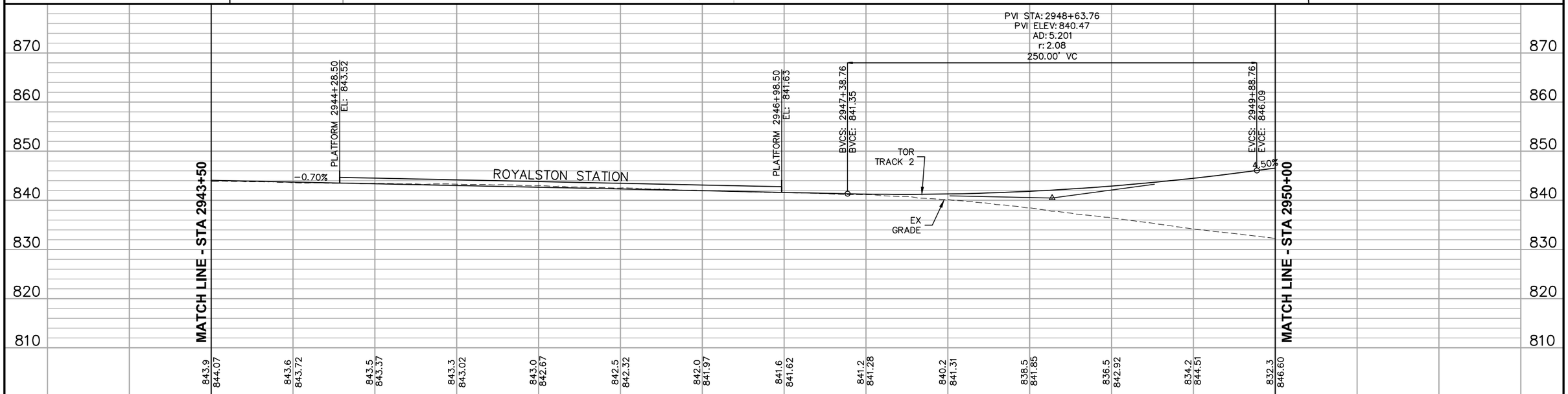

NO.	DATE	BY	CHECK	DESIGN	REVISION / SUBMITTAL

AECOM

90% SUBMISSION - 01/22/16

METROPOLITAN COUNCIL

SOUTHWEST Green Line LRT Extension

CIVIL - VOLUME 3B
TRACK
PLAN AND PROFILE
STA 2943+50 TO STA 2950+00

DISCIPLINE: TRACK

SHEET NAME: E4-TRK-PRF-017

SHEET 310 OF 420

Jan, 18 2016 10:13 am V:\3400_ADC\CAD\00_EAST\PLANSHEETS\TRACK\E4-TRK-PRF.dwg By: V-RasulL

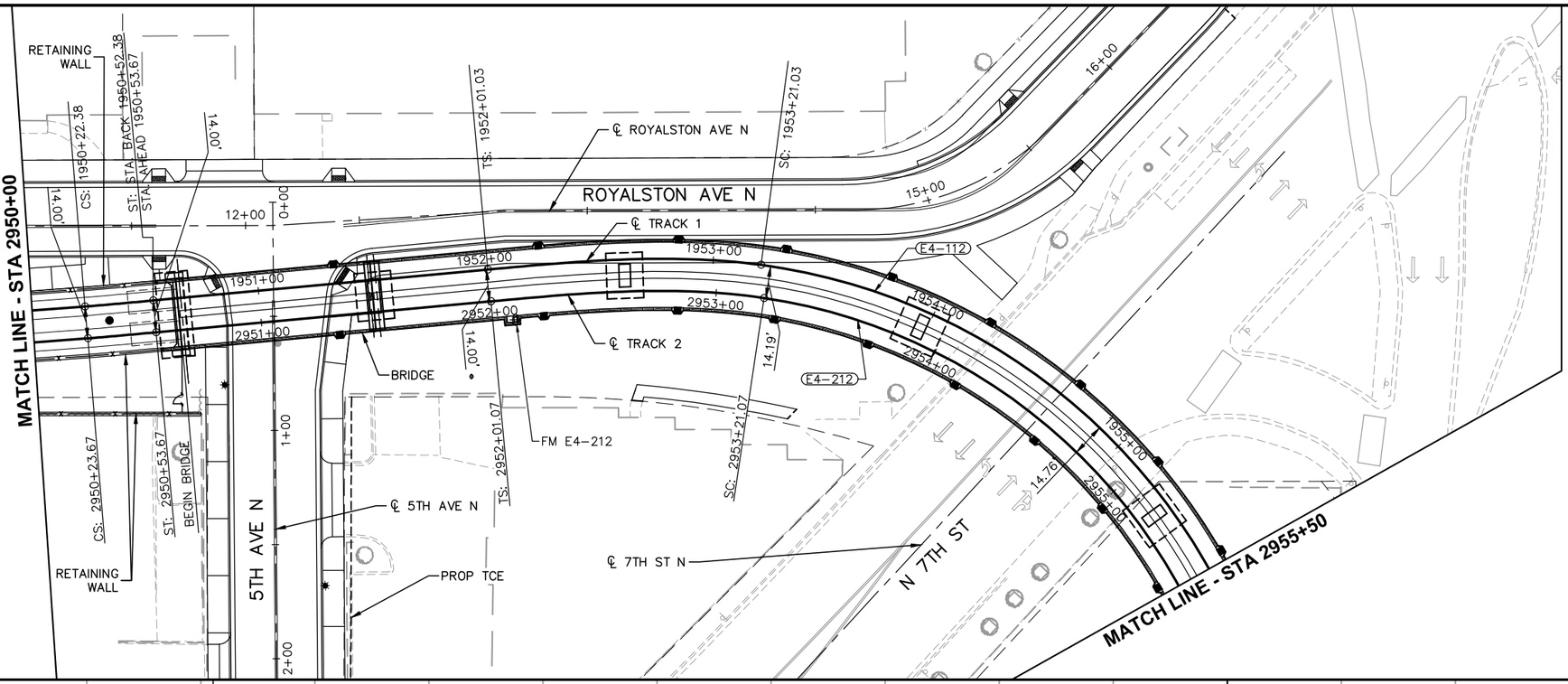

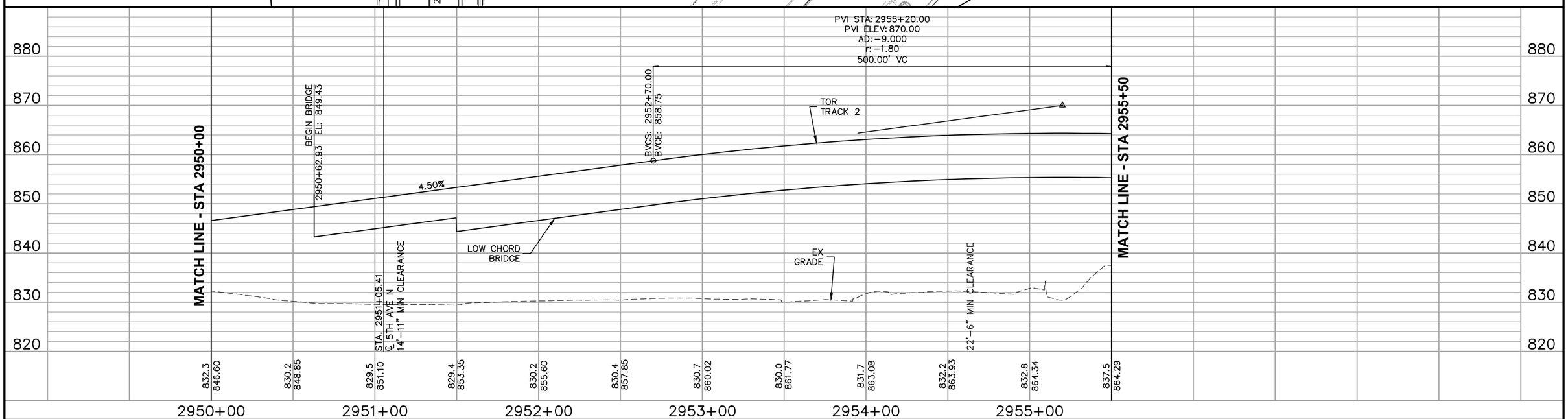

NO.	DATE	BY	CHECK	DESIGN	REVISION / SUBMITTAL

AECOM

90% SUBMISSION - 01/22/16

METROPOLITAN COUNCIL

SOUTHWEST Green Line LRT Extension

CIVIL - VOLUME 3B
TRACK
PLAN AND PROFILE
STA 2950+00 TO STA 2955+50

DISCIPLINE: TRACK

SHEET NAME: E4-TRK-PRF-018

SHEET 311 OF 420

Jan, 18 2016 10:14 am V:\3400_ADC\CAD\00_EAST\PLANSHEETS\TRACK\E4-TRK-PRF.dwg By: V-RasulL

CURVE NO. E4–213
R = 316.00'
Lc = 102.88'
Ls = 35.00'
Ea = 1.00"
Eu = 1.82"
V = 15 MPH

CURVE NO. E4–113
R = 332.00'
Lc = 109.85'
Ls = 35.00'
Ea = 1.00"
Eu = 1.82"
V = 15 MPH

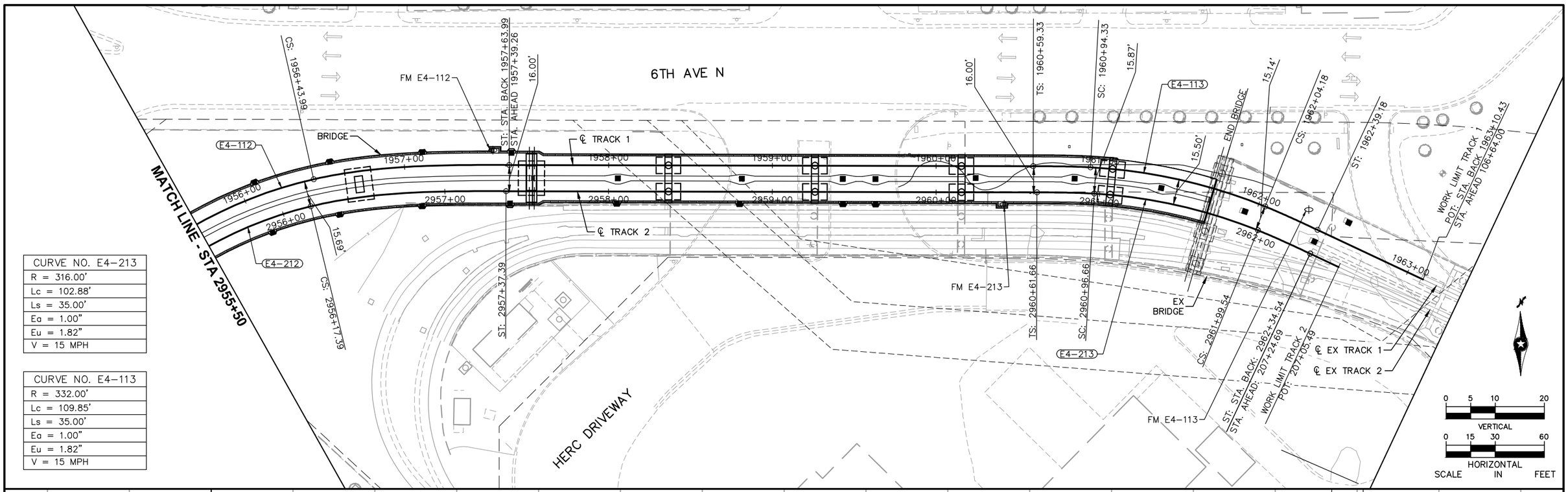

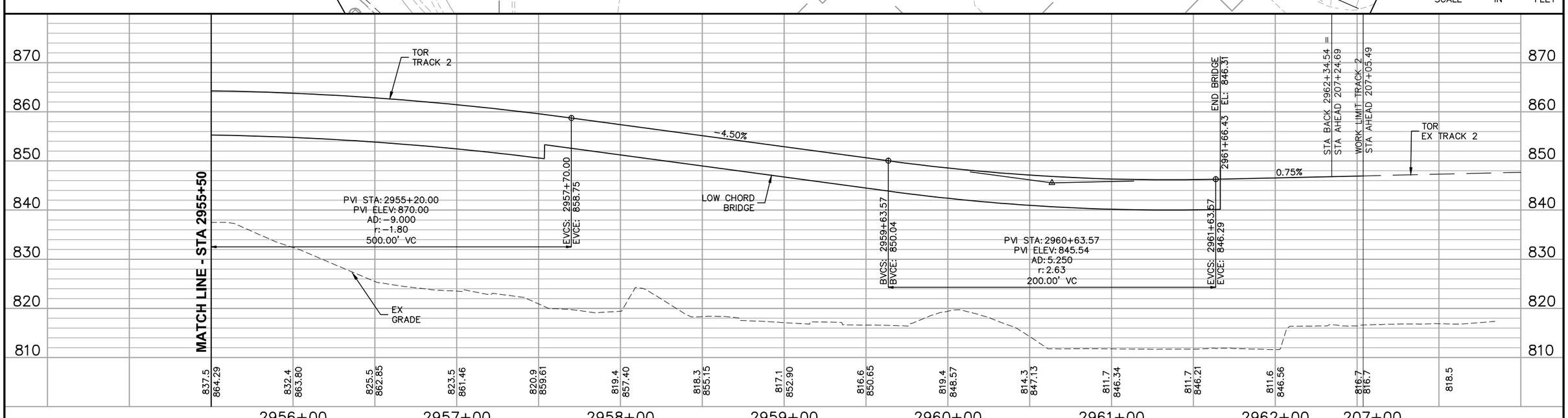

NO.	DATE	BY	CHECK	DESIGN	REVISION / SUBMITTAL

AECOM

90% SUBMISSION - 01/22/16

METROPOLITAN COUNCIL

SOUTHWEST Green Line LRT Extension

CIVIL - VOLUME 3B
TRACK
PLAN AND PROFILE
STA 2955+50 TO STA 2962+34.33

DISCIPLINE: TRACK

SHEET NAME: E4-TRK-PRF-019

SHEET 312 OF 420

Jan. 18 2016 10:15 am V:\3400_ADC\CAD\00_EAST\PLANSHEETS\TRACK\E4-TRK-PRF.dwg By: V-RosulL

SOIL CORRECTION TABLE FOR FREIGHT (TABLE 1 OF 3)

BORING NO		COORDINATES		STATIONING	GROUND	GWL	TOR	TOS	TOS	LIMITING SUBGRADE SOIL	SUBCUT REQUIRED*	SUBCUT ELEVATION*	SELECT SUBBASE REQUIRED
		NORTH	EAST		ELEVATION	ELEVATION	ELEVATION	ELEVATION	DEPTH**				
1193	ST	147915	495015	35+89	922.1	903.7	921.5	918.0	−4.1	SP	4.1	918.0	0
1094	ST	148035	495245	38+47	921.9	903.8	921.9	918.4	−3.5	CL	5.5	916.4	2
1192	ST	148101	495438	40+49	922.3	902.8	922.1	918.6	−3.7	CL	5.7	916.6	2
1093	ST	148263	495776	44+26	921.8	906.0	922.7	919.2	−2.6	SC	3.6	918.2	1
1296	SW	148274	495995	46+28	921.9	906.4	923.2	919.7	−2.2	SM/SC	3.2	918.7	1
1200	SW	148374	496025	46+98	921.9	906.9	923.1	919.6	−2.4	SM	3.4	918.5	1
1191	SW	148400	496082	47+61	921.9	904.0	923.2	919.7	−2.2	SM	3.2	918.7	1
1297	SW	148349	496159	48+21	922.4	901.5	923.3	919.8	−2.6	SM	3.6	918.8	1
1190	SB	148400	496254	49+15	922.7	906.9	923.4	919.9	−2.8	SM	3.8	918.9	1
1001	SB	148539	496364	50+75	921.5	903.8	923.7	920.2	−1.3	SM	2.3	919.2	1
1189	SB	148594	496474	51+98	922.3	906.6	923.9	920.4	−1.9	SM	2.9	919.4	1
1188	SB	148750	496804	55+63	923.4	906.4	924.6	921.1	−2.4	CL	4.4	919.0	2
1337	FR	148708	496901	56+31	924.3	<919.8	924.7	921.2	−3.1	SM	4.1	920.2	1
1002	SB	148811	496936	57+10	923.8	901.3	924.8	921.3	−2.5	SP−SM	2.5	921.3	0
1187	SB	148916	497178	59+79	923.2	906.7	925.3	921.8	−1.4	SM	2.4	920.8	1
1092	ST	149051	497427	62+59	925.1	906.3	925.8	922.3	−2.8	SP−SM	2.8	922.3	0
1218	SB	149052	497516	63+37	924.2	906.6	925.9	922.4	−1.8	SC w/org	3.8	920.4	2
1201	SB	149088	497693	65+17	924.5	906.6	926.2	922.7	−1.8	SM	2.0	922.5	0.2
1293	SB	149200	497732	65+97	925.3	<915.3	926.4	922.9	−2.4	SM	3.4	921.9	1
1142	SB	149252	497795	66+76	925.1	894.6	926.5	923.0	−2.1	SP−SM	2.1	923.0	0
1091	ST	149310	497970	68+59	925.4	<908.4	926.6	923.1	−2.3	SP	2.3	923.1	0
1298	SW	149336	498059	69+43	925.0	902.6	926.6	923.1	−1.9	SP	1.9	923.1	0
1299	SW	149406	498195	71+03	925.0	901.2	926.4	922.9	−2.1	SP−SM	2.1	922.9	0
1377	SD	149475	498320	72+46	924.6	902.6	925.9	922.4	−2.2	SP−SM	2.2	922.4	0
1090	ST	149569	498519	74+66	924.3	901.8	924.9	921.4	−2.9	SC/CL	4.9	919.4	2
1378	SD	149644	498691	76+53	923.0	<899.0	924.0	920.5	−2.5	SM/SC	3.5	919.5	1
1089	SS	149826	499056	80+61	921.6	<904.6	922.1	918.6	−3.0	SP−SM	3.0	918.6	0
3002	SW	149930	499177	82+15	919.1	898.0	921.4	917.9	−1.2	SP−SM	1.2	917.9	0
1070	ST	149985	499317	83+65	920.0	896.7	920.7	917.2	−2.8	SM/CL	4.0	916.0	2
1069	ST	150073	499512	85+79	918.0	896.8	919.7	916.2	−1.8	SM	2.5	915.5	1
3001	SW	150156	499656	87+45	916.3	896.0	918.9	915.4	−0.9	SC	1.9	914.4	1
1182	ST	150137	499886	89+44	916.1	898.1	918.0	914.5	−1.6	CL/slorg	4.0	912.1	2.4
1088	ST	150355	500128	92+57	916.2	897.8	916.5	913.0	−3.2	SC	4.2	912.0	1
1181	ST	150383	500396	95+05	913	897.4	915.4	911.9	−1.1	SM	2.1	910.9	1
1087	ST	150619	500689	98+77	913.7	894.7	913.7	910.2	−3.5	SP−SM	3.5	910.2	0
1301	SW	150678	500776	99+81	913.1	894.8	913.3	909.8	−3.3	SP−SM/CL	5.3	907.8	2
1302	SW	150750	500921	101+43	912.6	891.6	912.8	909.3	−3.3	SP−SM	3.3	909.3	0
1303	SW	150811	501049	102+84	912.6	891.9	912.5	909.0	−3.6	SP−SM	3.6	909.0	0
1009	SB	150872	501210	104+56	912.8	889.5	912.3	908.8	−4.0	SM	5.0	907.8	1
1010	SB	150994	501471	107+44	912.9	888.7	912.2	908.7	−4.2	SP−SM	4.2	908.7	0
1086	ST	151132	501758	110+62	914.2	<892.7	912.1	908.6	−5.6	SP−SM	5.6	908.6	0
1179	ST	151181	502045	113+42	910	<889.0	912.1	908.6	−1.5	SM	2.0	908.0	1
1085	ST	151391	502294	116+58	913.1	<891.6	912.0	908.5	−4.6	GP	4.6	908.5	0
1178	ST	151479	502652	120+18	907.1	887.0	911.9	908.4	1.3	SC	0.7	906.4	2
1084	ST	151652	502842	122+65	911.5	<890.0	911.8	908.3	−3.2	SP−SM	3.2	908.3	0
1177	ST	151779	503176	126+21	905.9	885.6	911.7	908.2	2.3	SM	0.5	905.4	2
1083	ST	151913	503390	128+72	910.1	<890.6	911.6	908.1	−2.0	SM	3.0	907.1	1
1011	SB	152171	503923	134+64	909.0	884.5	911.4	907.9	−1.1	SM	2.1	906.9	1
1012	SB	152262	504117	136+78	909.6	884.3	911.4	907.9	−1.7	SP−SM	1.7	907.9	0
1082	ST	152431	504459	140+59	911.0	<889.5	911.3	907.8	−3.2	SP−SM	3.2	907.8	0
1222	ST	152618	504861	145+00	911.3	887.8	911.1	907.6	−3.7	SP	3.7	907.6	0
1081	ST	152677	504983	146+38	911.7	<890.2	911.1	907.6	−4.1	SP	4.1	907.6	0
1080	ST	152946	505541	152+58	913.5	<892.0	911.4	907.9	−5.6	SP−SM	5.6	907.9	0
1366	SB	152956	505565	152+84	913.9	880.6	911.1	907.6	−6.3	SP	6.3	907.6	0
1079	ST	153205	506088	158+63	915.2	<893.7	914.5	911.0	−4.2	SP−SM	4.2	911.0	0
1078	ST	153465	506624	164+59	918.1	<896.6	916.9	913.4	−4.7	CL	6.7	911.4	2

NOTES:
- GWL – GROUND WATER LEVEL
- TOR – TOP OF RAIL
- TOS – TOP OF SUBGRADE
- ALL UNITS ARE IN FEET.
- * BORING SPECIFIC CASE
- ** BELOW EXISTING GROUND

NO.	DATE	BY	CHECK	DESIGN	REVISION / SUBMITTAL

AECOM

90% SUBMISSION - 01/22/16

METROPOLITAN COUNCIL

SOUTHWEST Green Line LRT Extension

CIVIL - VOLUME 3B
FREIGHT
SOIL CORRECTION TABLE
SHEET 1

DISCIPLINE: TRACK

SHEET NAME: E0-TRK-NTS-006

SHEET 313 OF 420

Jan, 18 2016 10:11 am V:\3400_ADC\CAD\00_EAST\PLANSHEETS\TRACK\E0-TRK-NTS.dwg By: V-Rasull

SOIL CORRECTION TABLE FOR FREIGHT (TABLE 2 OF 3)

BORING NO		COORDINATES		STATIONING	GROUND	GWL	TOR	TOS	TOS	LIMITING SUBGRADE SOIL	SUBCUT REQUIRED*	SUBCUT ELEVATION*	SELECT SUBBASE REQUIRED
		NORTH	EAST		ELEVATION	ELEVATION	ELEVATION	ELEVATION	DEPTH**				
3007	SW	153560	506786	166+46	917.1	<881.1	917.4	913.9	−3.2	SP	3.2	913.9	0
3006	SW	153668	506940	168+31	916.1	<880.1	917.5	914.0	−2.1	SC	3.1	913.0	1
3005	SW	153717	507097	169+94	917.8	<881.8	917.4	913.9	−3.9	CL	5.9	911.9	2
1068	SS	153779	507262	171+70	917.2	<885.7	917.0	913.5	−3.7	SP	3.7	913.5	0
3004	SW	153857	507338	172+72	913.6	<881.1	916.8	913.3	−0.3	SC	1.3	912.3	1
1067	SS	153878	507486	174+15	915.6	<884.1	916.5	913.0	−2.6	SP−SM	2.6	913.0	0
3003	SW	153942	507582	175+29	912.9	<876.9	916.2	912.7	−0.2	SM	1.2	911.7	1
1077	ST	154004	507731	176+90	913.2	<891.7	915.9	912.4	−0.8	SC	1.8	911.4	1
1379	SD	154153	507983	179+82	911.2	<890.2	915.2	911.7	0.5	SM	0.5	910.7	1
3010	SB	154191	508072	180+78	911.0	880.2	914.9	911.4	0.4	SM w/org	1.6	909.4	2
3011	SB	154240	508196	182+11	911.2	876.8	914.3	910.8	−0.4	SM	1.4	909.8	1
1076	ST	154248	508243	182+57	911.8	<890.3	914.0	910.5	−1.3	SC	2.3	909.5	1
1171	ST	154307	508552	185+62	909	<888.0	911.9	908.4	−0.6	CL	2.6	906.4	2
1380	SD	154467	508607	186+80	909.9	<878.9	910.9	907.4	−2.5	SC	3.5	906.4	1
1075	ST	154516	508775	188+53	909.4	<887.9	909.6	906.1	−3.3	CL	4.0	905.4	1
1074	ST	154785	509326	194+66	904.1	<882.6	904.7	901.2	−2.9	SP−SM	2.9	901.2	0
1330	STP	154736	509544	196+41	900.1	871.7	903.3	899.8	−0.3	SM	1.3	898.8	1
1170	ST	154815	509657	197+77	900.9	<879.9	902.2	898.7	−2.2	SM	3.2	897.7	1
1073	ST	155027	509876	200+66	898.6	<877.1	899.9	896.4	−2.2	SP−SM	2.2	896.4	0
1169	ST	155064	510199	203+71	896.6	<877.6	897.5	894.0	−2.6	SP	2.6	894.0	0
1072	ST	155298	510407	206+62	894.2	875.0	895.2	891.7	−2.5	SP−SM	2.5	891.7	0
1168	ST	155389	510728	209+91	890.9	874.2	892.6	889.1	−1.8	SM	2.0	888.9	1
1071	ST	155534	510922	212+29	889.8	873.7	890.7	887.2	−2.6	CL	4.6	885.2	2
1311	SW	155579	511001	213+19	890.1	873.1	890.0	886.5	−3.6	SM	4.6	885.5	1
1349	SR	155618	511171	214+90	888.8	872.6	888.7	885.2	−3.6	SM	4.6	884.2	1
1066	SS	155683	511229	215+70	887.9	873.8	888.2	884.7	−3.2	SM	4.2	883.7	1
1227	SW	155737	511331	216+84	886.9	879.5	887.7	884.2	−2.7	SM	3.7	883.2	1
1257	SS	155692	511355	216+88	886.2	876.0	887.7	884.2	−2.0	SM	3.0	883.2	1
1065	SS	155787	511450	218+14	886.9	873.3	887.4	883.9	−3.0	SP−SM	3.0	883.9	0
1167	ST	155888	511697	220+80	886.4	873.9	887.5	884.0	−2.4	SP	2.4	884.0	0
1232	SB	155935	511798	221+91	885.6	869.4	887.9	884.4	−1.2	ML	3.2	882.4	2
1312	SB	155934	511893	222+79	886.2	872.4	888.3	884.8	−1.4	SM	2.4	883.8	1
3018	SW	156093	512084	225+10	887.6	872.0	889.3	885.8	−1.8	SM	2.8	884.8	1
1235	SB	156089	512229	226+48	886.5	870.0	890.0	886.5	0.0	SP−SM	0.0	886.5	0
1236	SB	156052	512391	227+88	886.1	869.6	890.5	887.0	0.9	SM	0.1	886.0	1
1063	ST	156111	512626	230+33	887.6	872.4	890.7	887.2	−0.4	SP−SM	0.4	887.2	0
1238	SB	156173	512701	231+21	888.4	872.1	890.5	887.0	−1.4	SM	2.4	886.0	1
1062	ST	156191	512914	233+39	887.8	871.2	889.5	886.0	−1.8	SM/SP−SM	2.0	885.8	1
1229	SV	157322	515455	300+19	872.8	856.2	872.0	868.5	−4.3	SP	4.3	868.5	0
1230	SV	157440	515584	301+88	873.0	856.8	872.2	868.7	−4.3	SP	4.3	868.7	0
1157	ST	157443	515596	302+05	873.1	854.4	872.3	868.8	−4.4	SP−SM	4.4	868.7	0
1052	ST	157494	515648	302+71	873.0	858.9	872.3	868.8	−4.2	SP	4.2	868.8	0
1280	ST	157536	515715	303+48	873.4	860.3	872.4	868.9	−4.5	SP−SM	4.5	868.9	0
1051	ST	157725	515839	305+68	871.1	856.0	872.7	869.2	−1.9	SP−SM	1.9	869.2	0
1156	ST	157802	515913	306+74	871.3	855.3	872.9	869.4	−1.9	SC	2.9	868.4	1
1281	ST	157894	515980	307+84	872.8	855.9	873.1	869.6	−3.2	SM	4.2	868.6	1
1050	ST	157958	516002	308+49	873.0	854.2	873.3	869.8	−3.2	SP−SM	3.2	869.8	0
1282	ST	158009	516039	309+10	873.0	854.0	873.6	870.1	−2.9	SP−SM	2.9	870.1	0
1283	ST	158141	516101	310+53	873.8	852.6	874.2	870.7	−3.1	SM	4.1	869.7	1
1284	ST	158223	516127	311+39	873.9	851.6	874.4	870.9	−3.0	SP	3.0	870.9	0
1049	ST	158262	516135	311+78	874.0	<852.5	874.5	871.0	−3.0	SP	3.0	871.0	0
1155	ST	158307	516163	312+30	875.2	850.1	874.5	871.0	−4.2	SM	5.2	870.0	1
1048	ST	158530	516244	314+68	873.9	<852.4	874.3	870.8	−3.1	SP	3.1	870.8	0
1269	ST	158701	516317	316+55	873.7	851.2	873.9	870.4	−3.3	SM	4.3	869.4	1
1287	ST	158834	516389	318+08	873.6	851.6	873.6	870.1	−3.5	SM	4.0	869.6	1
1364	STP	158870	516330	318+08	873.3	<852.3	873.6	870.1	−3.2	SP−SM	3.2	870.1	0

NOTES:
- GWL – GROUND WATER LEVEL
- TOR – TOP OF RAIL
- TOS – TOP OF SUBGRADE
- ALL UNITS ARE IN FEET.
- * BORING SPECIFIC CASE
- ** BELOW EXISTING GROUND

NO.	DATE	BY	CHECK	DESIGN	REVISION / SUBMITTAL

AECOM

90% SUBMISSION - 01/22/16

METROPOLITAN COUNCIL

SOUTHWEST Green Line LRT Extension

CIVIL - VOLUME 3B
FREIGHT
SOIL CORRECTION TABLE
SHEET 2

DISCIPLINE: TRACK

SHEET NAME: E0-TRK-NTS-007

SHEET 314 OF 420

Jan, 18 2016 10:11 am v:\3400_ADC\CAD\00_EAST\PLANSHEETS\TRACK\E0-TRK-NTS.dwg By: V-RasulL

SOIL CORRECTION TABLE FOR FREIGHT (TABLE 3 OF 3)

BORING NO		COORDINATES		STATIONING	GROUND	GWL	TOR	TOS	TOS	LIMITING SUBGRADE SOIL	SUBCUT REQUIRED*	SUBCUT ELEVATION*	SELECT SUBBASE REQUIRED
		NORTH	EAST		ELEVATION	ELEVATION	ELEVATION	ELEVATION	DEPTH**				
1047	ST	158850	516396	318+26	873.6	<852.1	873.6	870.1	-3.5	SP-SV	3.5	870.1	0
1288	S	158867	516485	318+60	872.7	851.3	873.3	869.8	-2.9	SM	3.9	868.8	1
1382	STP	159010	516437	319+92	872.4	<856.4	873.3	869.8	-2.6	SM	3.6	868.8	1
1003	SB	159149	516538	321+54	872.4	849.0	873.0	869.5	-2.9	SM	3.9	868.5	1
1197	ST	159228	516579	322+17	871.8	<864.2	872.8	869.3	-2.5	SP-SV	2.5	869.3	0
1004	SB	159314	51666	323-63	870.3	848.7	872.5	869.0	-1.3	SM	2.0	868.3	1
1154	ST	159372	516794	324-85	871.8	850.1	872.3	868.8	-3.0	SM	4.0	867.8	1
1289	S	159468	516874	326+10	871.4	851.6	872.1	868.6	-2.9	SM	3.9	867.5	1
1045	S	159562	516968	327-57	870.5	<849.5	871.8	868.3	-2.2	SM/SC	3.2	867.3	1
1290	ST	159575	516965	327+5	870.4	852.4	871.8	868.3	-2.1	SM	3.1	867.3	1
1319	SW	159651	516937	328+15	869.8	850.3	871.7	868.2	-1.6	SP-SV	1.6	868.2	0
1291	ST	159659	517040	328-66	869.9	851.2	871.6	868.1	-1.9	SM	2.9	867	1
1153	S	159779	517071	329+94	869.2	849.2	871.3	867.8	-1.4	SM	2.4	866.8	1
1042	S	159822	517172	330-77	869.0	864.5	871.1	867.6	-1.4	SC/SM	2.4	866.6	1
1005	SB	159918	517230	331-88	869.1	848.0	870.8	867.3	-1.8	SM	2.8	866.3	1
1006	SB	160002	517289	332-90	868.4	847.4	870.5	867.0	-1.4	SM	2.4	866	1
1422	SH	160036	517268	333-00	866.5	850.8	870.5	867.0	0.5	SM	0.5	866	1
1040	ST	160056	517377	333+88	867.9	849.6	870.2	866.7	-1.2	SM	2.2	865.7	1
1323	SW	160148	517372	334+47	866.5	850.4	870.1	866.6	0.1	SM	0.9	865.6	1
1424	SW	160221	517405	335+15	866.8	850.3	869.9	866.4	-0.4	SM	1.4	865.4	1
1152	ST	160223	517507	335+82	867.9	852.5	869.7	866.2	-1.7	SC SP-SM	2.0	865.9	1
1039	S	160365	517597	337+17	867	851.9	869.2	865.7	-1.3	SM	2.3	864.7	1
1041	ST	160602	517682	339-83	865.9	850.5	868.6	865.1	-0.8	SM	1.8	864.1	1
1143	ST	160773	517726	341-49	866.2	851.3	868.1	864.6	-1.6	SC	2.6	863.6	1
1038	S	160950	517778	343+20	865.4	850.8	867.7	864.2	-1.2	SP-SV	1.2	864.2	0
1129	ST	167789	524223	95-41	822.6	<808.1	822.2	818.7	-3.9	CL	5.9	816.7	2
1130	ST	167899	524573	98+50	822.4	815.1	821.7	818.2	-4.2	SC	5.2	817.2	1
1131	SW	168125	524965	105-47	821.8	816.9	821.0	817.5	-4.3	SM	5.3	816.5	1
1135	SW	168296	525320	107+50	821.6	-	820.5	817.0	-4.6	SP-SV	4.6	817	0
1136	SW	168467	525680	111+46	821.3	793.4	820.6	817.1	-4.3	SP	4.3	817	0
1134	SH	168705	526078	116+81	821.5	-	821.6	818.1	-3.5	CH	5.5	816	2

NOTES:
- GWL – GROUND WATER LEVEL
- TOR – TOP OF RAIL
- TOS – TOP OF SUBGRADE
- ALL UNITS ARE IN FEET.
- * BORING SPECIFIC CASE
- ** BELOW EXISTING GROUND

NO.	DATE	BY	CHECK	DESIGN	REVISION / SUBMITTAL

AECOM

90% SUBMISSION - 01/22/16

METROPOLITAN COUNCIL

SOUTHWEST Green Line LRT Extension

CIVIL - VOLUME 3B
FREIGHT
SOIL CORRECTION TABLE
SHEET 3

DISCIPLINE: TRACK

SHEET NAME: E0-TRK-NTS-008

SHEET 315 OF 420

Jan, 18 2016 10:11 am V:\3400_ADC\CAD\00_EAST\PLANSHEETS\TRACK\E0-TRK-NTS.dwg By: V-RasulL

BASS LAKE SPUR ALIGNMENT

DESCRIPTION	POINT DESC.	STATIONING	COORDINATES		SPIRAL AND CURVE DATA / EQUATIONS				TANGENT	
			NORTHING	EASTING					DISTANCE	BEARING
TIE IN	BP	33+00.00	147724.3177	494786.1845						
TRACK AHEAD									300.00'	N 64° 13' 51'' E
NO. 15 RHTO	PITO	36+00.00	147854.7433	495056.3531						
	TRACK AHEAD								39.95'	N 64° 13' 51'' E
	PS	36+39.95	147872.1115	495092.3301						
TRACK AHEAD									95.28'	N 64° 13' 51'' E
CURVE E1-401	TS	37+35.23	147913.5354	495178.1373	Ls1 =	31.00'				
	SC	37+66.23	147926.9874	495206.0665	I =	01° 53' 18'' RT	Ea =	0.00''		
	PI	38+45.16	147961.3267	495277.1339	Rc =	5729.65'	Eu =	0.44''		
	CS	39+24.07	147993.2544	495349.3169	Lc =	157.84'	V =	25 MPH		
	ST	39+55.07	148005.8299	495377.6516	Ls2 =	31.00'				
TRACK AHEAD									118.93'	N 66° 07' 09'' E
NO. 11 LHTO	PITO	40+74.00	148053.9758	495486.3971						
	TRACK AHEAD								31.25'	N 66° 07' 09'' E
	PS	41+05.25	148066.6269	495514.9718						
TRACK AHEAD									132.19'	N 66° 07' 09'' E
CURVE E1-402	TS	42+37.44	148120.1436	495635.8483	Ls1 =	31.00'				
	SC	42+68.44	148132.7191	495664.1830	I =	01° 53' 56'' LT	Ea =	0.00''		
	PI	43+47.90	148164.8610	495736.8499	Rc =	5729.65'	Eu =	0.44''		
	CS	44+27.34	148199.4436	495808.3875	Lc =	158.90'	V =	25 MPH		
	ST	44+58.34	148212.9008	495836.3143	Ls2 =	31.00'				
TRACK AHEAD									1184.62'	N 64° 13' 13'' E
CURVE E1-403	TS	56+42.97	148728.1104	496903.0357	Ls1 =	31.00'				
	SC	56+73.97	148741.6305	496930.9320	I =	05° 49' 41'' LT	Ea =	0.50''		
	PI	58+52.91	148819.4184	497092.0852	Rc =	3819.83'	Eu =	0.16''		
	CS	60+31.52	148913.2399	497244.4625	Lc =	357.55'	V =	25 MPH		
	ST	60+62.52	148929.4514	497270.8857	Ls2 =	31.00'				
TRACK AHEAD									118.48'	N 58° 23' 31'' E
CURVE E1-404	TS	61+81.00	148991.5471	497371.7895	Ls1 =	31.00'				
	SC	62+12.00	149007.7586	497398.2127	I =	06° 00' 29'' RT	Ea =	0.50''		
	PI	63+96.95	149104.7300	497555.7084	Rc =	3819.83'	Eu =	0.16''		
	CS	65+81.54	149184.6086	497722.5250	Lc =	369.54'	V =	25 MPH		
	ST	66+12.54	149198.0410	497750.4636	Ls2 =	31.00'				
TRACK AHEAD									15283.12'	N 64° 24' 00'' E
CURVE E2-401	TS	218+95.66	155801.6574	511533.2742	Ls1 =	31.00'				
	SC	219+26.66	155815.0079	511561.2521	I =	04° 35' 28'' RT	Ea =	0.50''		
	PI	220+42.40	155865.0650	511665.6161	Rc =	3274.17'	Eu =	0.27''		
	CS	221+58.01	155906.5165	511773.6869	Lc =	231.35'	V =	25 MPH		
	ST	221+89.01	155917.6761	511802.6086	Ls2 =	31.00'				
TRACK AHEAD									533.23'	N 68° 59' 28'' E

DESCRIPTION	POINT DESC.	STATIONING	COORDINATES		SPIRAL AND CURVE DATA / EQUATIONS				TANGENT	
			NORTHING	EASTING					DISTANCE	BEARING
CURVE E2-402	TS	227+22.24	156108.8455	512300.3885	Ls1 =	31.00'				
	SC	227+53.24	156119.9203	512329.3428	I =	02° 58' 23'' RT	Ea =	0.50''		
	PI	228+36.87	156149.9426	512407.3999	Rc =	3819.83'	Eu =	0.16''		
	CS	229+20.46	156175.7960	512486.9351	Lc =	167.22'	V =	25 MPH		
	ST	229+51.46	156185.4338	512516.3988	Ls2 =	31.00'				
TRACK AHEAD									248.66'	N 71° 57' 51'' E
CURVE E2-403	TS	232+00.12	156262.4230	512752.8444	Ls =	93.00'				
	SC	232+93.12	156290.1767	512841.6013	I =	06° 38' 43'' RT	Ea =	0.50''		
	PI	233+21.05	156299.8647	512867.8338	Rc =	1322.53'	Eu =	0.71''		
	PT/EP	234+00.00	156315.4934	512945.4101	Lc =	106.86'	V =	20 MPH		

NO.	DATE	BY	CHECK	DESIGN	REVISION / SUBMITTAL

AECOM

90% SUBMISSION - 01/22/16

METROPOLITAN COUNCIL

SOUTHWEST Green Line LRT Extension

CIVIL - VOLUME 3B
FREIGHT
ALIGNMENT DATA
SHEET 1

DISCIPLINE: FREIGHT

SHEET NAME: E1-FRT-ALG-001

SHEET 316 OF 420

Jan, 18 2016 11:56 am V:\3400_ADC\CAD\00_EAST\PLANSHEETS\TRACK\E1-FRT-ALG.dwg By: V-BurrellM

SIDING TRACK ALIGNMENT

DESCRIPTION	POINT DESC.	STATIONING	COORDINATES		SPIRAL AND CURVE DATA / EQUATIONS				TANGENT	
			NORTHING	EASTING					DISTANCE	BEARING
TIE IN	BP	33+00.00	147736.3958	494780.7978						
TRACK AHEAD									47.43'	N 64° 14' 32'' E
CURVE E1-405	PC	33+47.43	147757.0063	494823.5127	I =	03° 48' 25'' RT	Ea =	0.00''		
	PI	34+01.84	147780.6529	494872.5200	Rc =	1637.28'	Eu =	0.55''		
	PT	34+56.22	147800.9935	494922.9892	Lc =	108.77'	V =	10 MPH		
TRACK AHEAD									143.78'	N 68° 02' 57'' E
NO. 15 RHTO TIE IN	PITO	36+00.00	147854.7433	495056.3531						
	TRACK AHEAD								39.95'	N 64° 13' 51'' E
	PS/EP	36+39.95	147872.1115	495092.3301						

SPUR TRACK ALIGNMENT

DESCRIPTION	POINT DESC.	STATIONING	COORDINATES		SPIRAL AND CURVE DATA / EQUATIONS				TANGENT	
			NORTHING	EASTING					DISTANCE	BEARING
TIE IN	BP	36+83.90	147842.0220	495159.5960						
TRACK AHEAD									141.98'	N 53° 29' 19'' E
CURVE E1-406	PC	38+25.87	147926.4953	495273.7078	I =	07° 25' 32'' RT	Ea =	0.00''		
	PI	38+87.87	147963.3809	495323.5351	Rc =	955.37'	Eu =	0.95''		
	PT	39+49.69	147993.5176	495377.7115	Lc =	123.76'	V =	10 MPH		
TRACK AHEAD									124.37'	N 60° 54' 51'' E
NO. 11 LHTO TIE IN	PITO	40+74.00	148053.9745	495486.3942						
	TRACK AHEAD								31.25'	N 66° 07' 09'' E
	PS/EP	41+05.25	148066.6269	495514.9718						

Jan, 18 2016 11:56 am V:\3400_ADC\CAD\00_EAST\PLANSHEETS\TRACK\E1-FRT-ALG.dwg By: V-BurrellM

NO.	DATE	BY	CHECK	DESIGN	REVISION / SUBMITTAL

AECOM

90% SUBMISSION - 01/22/16

METROPOLITAN COUNCIL

SOUTHWEST Green Line LRT Extension

CIVIL - VOLUME 3B
FREIGHT
ALIGNMENT DATA
SHEET 2

DISCIPLINE: FREIGHT

SHEET NAME: E1-FRT-ALG-002

SHEET 317 OF 420

SOUTHERLY CONNECTOR ALIGNMENT

DESCRIPTION	POINT DESC.	STATIONING	COORDINATES		SPIRAL AND CURVE DATA / EQUATIONS				TANGENT	
			NORTHING	EASTING					DISTANCE	BEARING
TIE IN	PS/EP	136+61.08	152243.6146	504107.0661						
NO. 15 RHTO	TRACK AHEAD								39.95'	N 64° 24' 00'' E
	PITO	137+01.03	152260.8765	504143.0943						
TRACK AHEAD									610.60'	N 68° 13' 06'' E
CURVE E2-404	TS	143+11.63	152487.4533	504710.1030	Ls1 =	93.00'				
	SC	144+04.63	152520.7896	504796.9156	I =	69° 25' 35'' RT	Ea =	0.50''		
	PI	151+52.46	152799.4597	505490.8992	Rc =	1146.28'	Eu =	0.29''		
	CS	157+00.60	152245.9707	505993.8108	Lc =	1295.56'	V =	15 MPH		
	ST	157+93.19	152178.1039	506057.3862	Ls2 =	93.00'				
TRACK AHEAD									250.53'	S 42° 21' 19'' E
NO. 15 LHTO	PITO	160+43.72	151992.9689	506226.1728						
	TRACK AHEAD								39.95'	S 38° 32' 13'' E
TIE IN	PS/EP	160+83.67	151961.7197	506251.0624						

MN&S ALIGNMENT

DESCRIPTION	POINT DESC.	STATIONING	COORDINATES		SPIRAL AND CURVE DATA / EQUATIONS				TANGENT	
			NORTHING	EASTING					DISTANCE	BEARING
TIE IN	BP	159+05.82	152100.8380	506140.2562						
TRACK AHEAD									137.90'	S 38° 32' 13'' E
NO. 15 LHTO	PITO	160+43.72	151992.9689	506226.1728						
	TRACK AHEAD								39.95'	S 38° 32' 13'' E
TIE IN	PS/EP	160+83.67	151961.7197	506251.0624						

NO.	DATE	BY	CHECK	DESIGN	REVISION / SUBMITTAL

AECOM

90% SUBMISSION - 01/22/16

METROPOLITAN COUNCIL

SOUTHWEST Green Line LRT Extension

CIVIL - VOLUME 3B
FREIGHT
ALIGNMENT DATA
SHEET 3

DISCIPLINE: FREIGHT

SHEET NAME: E2-FRT-ALG-001

SHEET 318 OF 420

Jan, 18 2016 11:57 am V:\3400_ADC\CAD\00_EAST\PLANSHEETS\TRACK\E2-FRT-AL6.dwg By: V-BurrellM

FREIGHT- KENILWORTH ALIGNMENT

DESCRIPTION	POINT DESC.	STATIONING	COORDINATES		SPIRAL AND CURVE DATA / EQUATIONS				TANGENT	
			NORTHING	EASTING					DISTANCE	BEARING
TIE IN	BP	300+00.00	157326.9140	515430.9708						
TRACK AHEAD									361.09'	N 44° 46' 16'' E
CURVE E3-110	TS	303+61.09	157583.2645	515685.2813	Ls1 =	62.00'				
	SC	304+23.09	157627.5539	515728.6671	I =	22° 53' 51'' LT	Ea =	1.00''		
	PI	307+23.70	157840.6855	515940.6537	Rc =	1637.28'	Eu =	0.53''		
	CS	310+15.32	158119.7949	516052.2839	Lc =	592.22'	V =	25 MPH		
	ST	310+77.32	158177.1835	516075.7450	Ls2 =	62.00'				
TRACK AHEAD									444.85'	N 21° 52' 25'' E
CURVE E3-111	TS	315+22.17	158590.0115	516241.4798	Ls1 =	62.00'				
	SC	315+84.17	158647.4215	516264.8892	I =	14° 15' 12'' RT	Ea =	0.75''		
	PI	317+92.00	158840.4114	516342.0059	Rc =	1910.08'	Eu =	0.56''		
	CS	319+97.29	159008.0781	516464.8064	Lc =	413.16'	V =	25 MPH		
	ST	320+59.29	159058.3528	516501.0882	Ls2 =	62.00'				
TRACK AHEAD									611.33'	N 36° 07' 37'' E
CURVE E3-112	TS	326+70.62	159552.1294	516861.5115	Ls1 =	31.00'				
	SC	327+01.62	159577.1437	516879.8222	I =	03° 36' 42'' RT	Ea =	0.50''		
	PI	328+06.55	159661.9249	516941.6547	Rc =	3819.83'	Eu =	0.16''		
	CS	329+11.40	159742.5889	517008.7696	Lc =	209.78'	V =	25 MPH		
	ST	329+42.40	159766.4537	517028.5552	Ls2 =	31.00'				
TRACK AHEAD									419.95'	N 39° 44' 19'' E
CURVE E3- 113	TS	333+62.35	160089.3801	517297.0215	Ls1 =	93.00'				
	SC	334+55.35	160161.5299	517355.6952	I =	34° 08' 38'' LT	Ea =	1.00''		
	PI	338+48.91	160463.5290	517608.0719	Rc =	1432.69'	Eu =	0.75''		
	CS	342+15.97	160855.3212	517645.4402	Lc =	760.62'	V =	25 MPH		
	ST	343+08.97	160947.7703	517655.5072	Ls2 =	93.00'				
TRACK AHEAD									33.03'	N 05° 35' 41'' E
TIE IN	EP	343+42.00	160980.6465	517658.7277						

NO.	DATE	BY	CHECK	DESIGN	REVISION / SUBMITTAL

AECOM

90% SUBMISSION - 01/22/16

METROPOLITAN COUNCIL

SOUTHWEST Green Line LRT Extension

CIVIL - VOLUME 3B
FREIGHT
ALIGNMENT DATA
SHEET 4

DISCIPLINE: FREIGHT

SHEET NAME: E3-FRT-ALG-001

SHEET 319 OF 420

Jan, 18 2016 11:57 am V:\3400_ADC\CAD\00_EAST\PLANSHEETS\TRACK\E3-FRT-AL6.dwg By: V-BurrellM

BNSF WAYZATA SUB ALIGNMENT

DESCRIPTION	POINT DESC.	STATIONING	COORDINATES		SPIRAL AND CURVE DATA / EQUATIONS				TANGENT	
			NORTHING	EASTING					DISTANCE	BEARING
TIE IN	BP	92+38.68	167692.9605	523931.5917						
TRACK AHEAD									100.00'	N 65° 12' 01'' E
CURVE E4-401	TS	93+38.68	167734.9051	524022.3697	Ls1 =	62.00'				
	SC	94+00.68	167760.9362	524078.6403	I =	00° 35' 50'' LT	Ea =	0.00''		
	PI	94+89.12	167798.0090	524158.9410	Rc =	22918.33'	Eu =	0.11''		
	CS	95+77.57	167835.9672	524238.8270	Lc =	176.89'	V =	25 MPH		
	ST	96+39.57	167862.5329	524294.8472	Ls2 =	62.00'				
TRACK AHEAD									499.18'	N 64° 36' 11'' E
CURVE E4-402	TS	101+38.74	168076.6221	524745.7813	Ls1 =	62.00'				
	SC	102+00.74	168103.1625	524801.8135	I =	01° 25' 35'' RT	Ea =	0.00''		
	PI	103+12.39	168151.0997	524902.6530	Rc =	11459.19'	Eu =	0.22''		
	CS	104+24.03	168196.4097	525004.6999	Lc =	223.29'	V =	25 MPH		
	ST	104+86.03	168221.6492	525061.3300	Ls2 =	62.00'				
TRACK AHEAD									240.63'	N 66° 01' 46'' E
CURVE E4-403	TS	107+26.66	168319.4088	525281.2071	Ls1 =	160.00'				
	SC	108+86.66	168385.4478	525426.9390	I =	10° 10' 57'' LT	Ea =	0.50''		
	PI	111+39.81	168487.2570	525658.7246	Rc =	3750.00'	Eu =	0.17''		
	CS	114+23.10	168647.6801	525894.4050	Lc =	536.44'	V =	25 MPH		
	ST	115+23.10	168703.4519	525977.4071	Ls2 =	100.00'				
TRACK AHEAD									145.98'	N 55° 50' 49'' E
CURVE E4-404	TS	116+69.08	168785.4053	526098.2106	Ls1 =	100.00'				
	SC	117+69.08	168842.5016	526180.3016	I =	11° 08' 29'' LT	Ea =	1.00''		
	PI	118+58.84	168891.9383	526255.2457	Rc =	1432.69'	Eu =	0.75''		
	CS	119+47.67	168956.5612	526317.5714	Lc =	178.55'	V =	25 MPH		
	ST	120+47.63	169026.8072	526388.7361	Ls2 =	100.00'				
TRACK AHEAD									385.10'	N 44° 42' 20'' E
CURVE E4-405	TS	124+32.73	169300.5120	526659.6431	Ls1 =	62.00'				
	SC	124+94.73	169344.8121	526703.0184	I =	06° 00' 29'' LT	Ea =	0.50''		
	PI	125+63.97	169393.7884	526751.9660	Rc =	1910.08'	Eu =	0.81''		
	CS	126+33.01	169448.0383	526794.9950	Lc =	138.27'	V =	25 MPH		
	ST	126+95.01	169496.2155	526834.0189	Ls2 =	62.00'				
TRACK AHEAD									104.99'	N 38° 41' 52'' E
TIE IN	EP	128+00.00	169578.1584	526899.6621						

Jan, 18 2016 11:57 am V:\3400_ADC\CAD\00_EAST\PLANSHEETS\TRACK\E4-FRT-ALG.dwg By: V-BurrellM

NO.	DATE	BY	CHECK	DESIGN	REVISION / SUBMITTAL

AECOM

90% SUBMISSION - 01/22/16

METROPOLITAN COUNCIL

SOUTHWEST Green Line LRT Extension

CIVIL - VOLUME 3B
FREIGHT
ALIGNMENT DATA
SHEET 5

DISCIPLINE: FREIGHT

SHEET NAME: E4-FRT-ALG-001

SHEET 320 OF 420

RAIL TYPE | GENERAL INFORMATION | ALIGNMENT DATA | DESIGN SPEED | STRUCT. TYPE | TRK 2 PROFILE DATA

FRT TRK

136 RE | PREMIUM 136 RE | 136 RE | PREMIUM 136 RE | 136 RE

BP: 33+00.00

PS 36+39.95 SIDING TRACK
36+39.95 BASS LAKE SPUR

TS: 37+35.23
SC: 37+66.23

TH 169

CS: 39+24.07
ST: 39+55.07

PS 41+05.25 SIDING TRACK
41+05.25 BASS LAKE SPUR

TS: 42+37.44
SC: 42+68.44

CS: 44+27.34
ST: 44+58.34

EB CSAH 3
(EXCELSIOR BLVD)

WB CSAH 3
(EXCELSIOR BLVD)

TS: 56+42.97
SC: 56+73.97

CS: 60+31.52
ST: 60+62.52

SWLRT
TRACK 2

SWLRT
TRACK 1

TS: 61+81.00
SC: 62+12.00

E1-401 | E1-402 | E1-403 | E1-404

25 MPH

TIE AND BALLAST TRK | NO 15 RH TURNOUT ON TIE AND BALLAST TRK | TIE AND BALLAST TRK | NO 11 LH TURNOUT ON TIE AND BALLAST TRK | TIE AND BALLAST TRK

PVI STA: 46+00.00
PVI ELEV: 922.88
AD: 0.038
200.00' VC

BVCS: 45+00.00
BVCE: 922.75

EVCS: 47+00.00
EVCE: 923.06

BP: 33+00.00
EL: 921.13

0.14%

0.17%

960 | 940 | 920 | 900 | 880

34+00 | 36+00 | 38+00 | 40+00 | 42+00 | 44+00 | 46+00 | 48+00 | 50+00 | 52+00 | 54+00 | 56+00 | 58+00 | 60+00 | 62+00

NO.	DATE	BY	CHECK	DESIGN	REVISION / SUBMITTAL

AECOM

90% SUBMISSION - 01/22/16

METROPOLITAN COUNCIL

SOUTHWEST
Green Line LRT Extension

CIVIL - VOLUME 3B
FREIGHT
TRACK CHART
SHEET 1

DISCIPLINE: FREIGHT

SHEET NAME: E1-FRT-CHT-001

SHEET 321 OF 420

Jan, 18 2016 11:51 am V:\3400_ADC\CAD\00_EAST\PLANSHEETS\TRACK\E1-FRT-CHT.dwg By: V-BurrellM

RAIL TYPE | GENERAL INFORMATION | ALIGNMENT DATA | DESIGN SPEED | STRUCT. TYPE | TRK 2 PROFILE DATA

FRT TRK

136 RE

CSAH 20 (BLAKE RD)

CS: 65+81.54
ST: 66+12.54

E1-404

25 MPH

TIE AND BALLAST TRK

CROSSING PANELS ON TIE AND BALLAST TRK

TIE AND BALLAST TRK

PVI STA: 70+00.00
PVI ELEV: 927.05
AD: -0.639
640.00' VC

BVCS: 66+80.00
BVCE: 926.49

EVCS: 73+20.00
EVCE: 925.56

0.17%

-0.47%

960
940
920
900
880

64+00 66+00 68+00 70+00 72+00 74+00 76+00 78+00 80+00 82+00 84+00 86+00 88+00 90+00 92+00

NO.	DATE	BY	CHECK	DESIGN	REVISION / SUBMITTAL

AECOM

90% SUBMISSION - 01/22/16

METROPOLITAN COUNCIL

SOUTHWEST Green Line LRT Extension

CIVIL - VOLUME 3B FREIGHT TRACK CHART SHEET 2

DISCIPLINE: FREIGHT

SHEET NAME: E1-FRT-CHT-002

SHEET 322 OF 420

Jan, 18 2016 11:51 am V:\3400_ADC\CAD\00_EAST\PLANSHEETS\TRACK\E1-FRT-CHT.dwg By: V-BurrellM

RAIL TYPE | GENERAL INFORMATION | ALIGNMENT DATA | DESIGN SPEED | STRUCT. TYPE | TRK 2 PROFILE DATA

FRT TRK

136 RE

GUARD RAIL

25 MPH

TIE AND BALLAST TRK

PVI STA: 101+50.00
PVI ELEV: 912.39
AD: 0.437
700.00' VC

BVCS: 98+00.00
BVCE: 914.01

EVCS: 105+00.00
EVCE: 912.29

−0.47%

−0.03%

960
940
920
900
880

94+00 96+00 98+00 100+00 102+00 104+00 106+00 108+00 110+00 112+00 114+00 116+00 118+00 120+00 122+00

NO.	DATE	BY	CHECK	DESIGN	REVISION / SUBMITTAL

AECOM

90% SUBMISSION - 01/22/16

METROPOLITAN COUNCIL

SOUTHWEST Green Line LRT Extension

CIVIL - VOLUME 3B
FREIGHT
TRACK CHART
SHEET 3

DISCIPLINE: FREIGHT

SHEET NAME: E1-FRT-CHT-003

SHEET 323 OF 420

Jan, 18 2016 11:51 am V:\3400_ADC\CAD\00_EAST\PLANSHEETS\TRACK\E1-FRT-CHT.dwg By: V-BurrellM

RAIL TYPE | GENERAL INFORMATION | ALIGNMENT DATA | DESIGN SPEED | STRUCT. TYPE | TRK 2 PROFILE DATA

FRT TRK

136 RE | PREMIUM 136 RE | 136 RE

LOUISIANA AVE

GUARD RAIL

PS 136+61.08
SOUTHERLY CONNECTOR
136+61.08 BASS LAKE SPUR

LOUISIANA STATION UNDERPASS

25 MPH

TIE AND BALLAST TRK | NO 15 RH TURNOUT ON TIE AND BALLAST TRK | TIE AND BALLAST TRK

PVI STA: 155+00.00
PVI ELEV: 910.86
AD: 0.742
800.00' VC

BVCS: 151+00.00
BVCE: 910.97

−0.03%

960 | 940 | 920 | 900 | 880

124+00 | 126+00 | 128+00 | 130+00 | 132+00 | 134+00 | 136+00 | 138+00 | 140+00 | 142+00 | 144+00 | 146+00 | 148+00 | 150+00 | 152+00

NO.	DATE	BY	CHECK	DESIGN	REVISION / SUBMITTAL

AECOM

90% SUBMISSION - 01/22/16

METROPOLITAN COUNCIL

SOUTHWEST Green Line LRT Extension

CIVIL - VOLUME 3B
FREIGHT
TRACK CHART
SHEET 4

DISCIPLINE: FREIGHT

SHEET NAME: E1-FRT-CHT-004

SHEET 324 OF 420

Jan, 18 2016 11:51 am V:\3400_ADC\CAD\00_EAST\PLANSHEETS\TRACK\E1-FRT-CHT.dwg By: V-BurrellM

DESIGN SPEED | ALIGNMENT DATA | GENERAL INFORMATION | RAIL TYPE

STRUCT. TYPE

TRK 2 PROFILE DATA

FRT TRK

136 RE

MN&S SPUR

WOODDALE AVE S

25 MPH

TIE AND BALLAST TRK

CROSSING PANELS ON TIE AND BALLAST TRK

TIE AND BALLAST TRK

PVI STA: 155+00.00
PVI ELEV: 910.86
AD: 0.742
800.00' VC

PVI STA: 165+50.00
PVI ELEV: 918.35
AD: −0.932
1000.00' VC

PVI STA: 182+00.00
PVI ELEV: 914.76
AD: −0.577
600.00' VC

EVCS: 159+00.00
EVCE: 913.71

BVCS: 160+50.00
BVCE: 914.78

EVCS: 170+50.00
EVCE: 917.26

BVCS: 179+00.00
BVCE: 915.41

0.71%

−0.22%

960
940
920
900
880

154+00 156+00 158+00 160+00 162+00 164+00 166+00 168+00 170+00 172+00 174+00 176+00 178+00 180+00 182+00

NO.	DATE	BY	CHECK	DESIGN	REVISION / SUBMITTAL

AECOM

90% SUBMISSION - 01/22/16

METROPOLITAN COUNCIL

SOUTHWEST Green Line LRT Extension

CIVIL - VOLUME 3B FREIGHT TRACK CHART SHEET 5

DISCIPLINE: FREIGHT

SHEET NAME: E1-FRT-CHT-005

SHEET 325 OF 420

Jan, 18 2016 11:52 am V:\3400_ADC\CAD\00_EAST\PLANSHEETS\TRACK\E1-FRT-CHT.dwg By: V-BurrellM

RAIL TYPE | GENERAL INFORMATION | ALIGNMENT DATA | DESIGN SPEED | STRUCT. TYPE | TRK 2 PROFILE DATA

FRT TRK

136 RE

TH 100 SB

TH 100 NB

GUARD RAIL

25 MPH

TIE AND BALLAST TRK

PVI STA: 182+00.00
PVI ELEV: 914.76
AD: −0.577
600.00' VC

EVCS: 185+00.00
EVCE: 912.37

−0.80%

940
920
900
880
860

184+00 186+00 188+00 190+00 192+00 194+00 196+00 198+00 200+00 202+00 204+00 206+00 208+00 210+00 212+00

NO.	DATE	BY	CHECK	DESIGN	REVISION / SUBMITTAL

AECOM

90% SUBMISSION - 01/22/16

METROPOLITAN COUNCIL

SOUTHWEST Green Line LRT Extension

CIVIL - VOLUME 3B
FREIGHT
TRACK CHART
SHEET 6

DISCIPLINE: FREIGHT

SHEET NAME: E1-FRT-CHT-006

SHEET 326 OF 420

Jan, 18 2016 11:52 am V:\3400_ADC\CAD\00_EAST\PLANSHEETS\TRACK\E1-FRT-CHT.dwg By: V-BurrellM

RAIL TYPE | GENERAL INFORMATION | ALIGNMENT DATA | DESIGN SPEED | STRUCT. TYPE | TRK 2 PROFILE DATA

FRT TRK

136 RE

BELTLINE BLVD

CEDAR LAKE LRT REGIONAL TRAIL

TS: 218+95.66
SC: 219+26.66
CS: 221+58.01
ST: 221+89.01
TS: 227+22.24
SC: 227+53.24
CS: 229+20.46
ST: 229+51.46
TS: 232+00.12
SC: 232+93.12
EP: 234+00.00

E2-401 | E2-402 | E2-403

25 MPH | 20 MPH

TIE AND BALLAST TRK

CROSSING PANELS ON TIE AND BALLAST TRK

TIE AND BALLAST TRK

PVI STA: 218+00.00
PVI ELEV: 886.13
AD: 1.247
800.00' VC

PVI STA: 230+00.00
PVI ELEV: 891.55
AD: -1.052
600.00' VC

BVCS: 214+00.00
BVCE: 889.31
EVCS: 222+00.00
EVCE: 887.93
BVCS: 227+00.00
BVCE: 890.19
EVCS: 233+00.00
EVCE: 889.75
EP: 234+00.00
EL: 889.15

940 | 920 | 900 | 880 | 860

-0.80% | 0.45% | -0.60%

214+00 | 216+00 | 218+00 | 220+00 | 222+00 | 224+00 | 226+00 | 228+00 | 230+00 | 232+00

NO.	DATE	BY	CHECK	DESIGN	REVISION / SUBMITTAL

AECOM

90% SUBMISSION - 01/22/16

METROPOLITAN COUNCIL

SOUTHWEST Green Line LRT Extension

CIVIL - VOLUME 3B
FREIGHT
TRACK CHART
SHEET 7

SHEET 327 OF 420

DISCIPLINE: FREIGHT

SHEET NAME: E1-FRT-CHT-007

Jan, 18 2016 11:52 am V:\3400_ADC\CAD\00_EAST\PLANSHEETS\TRACK\E1-FRT-CHT.dwg By: V-BurrellM

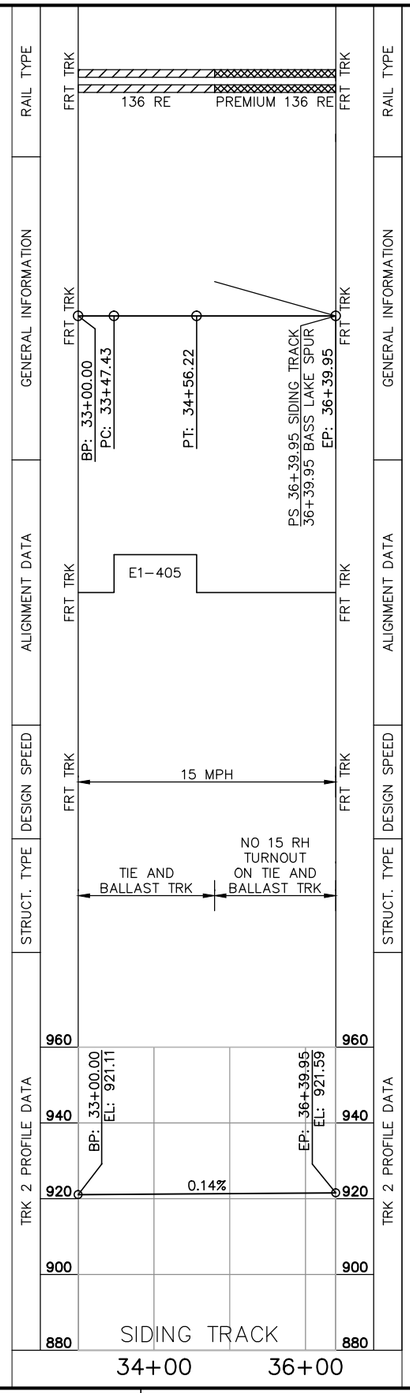

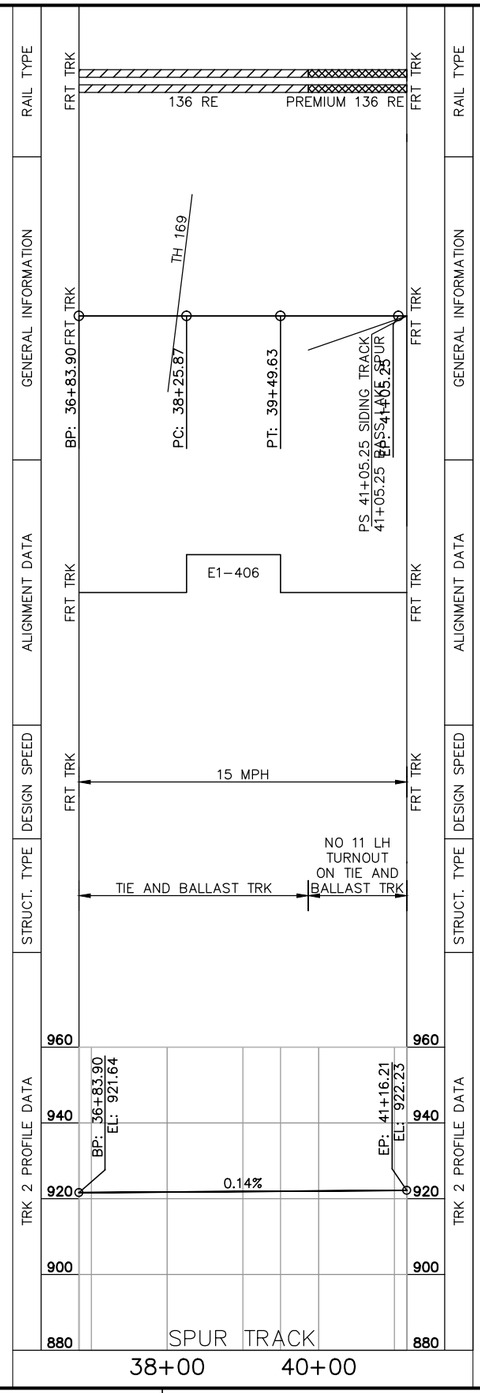

NO.	DATE	BY	CHECK	DESIGN	REVISION / SUBMITTAL

AECOM

90% SUBMISSION - 01/22/16

METROPOLITAN COUNCIL

SOUTHWEST Green Line LRT Extension

CIVIL - VOLUME 3B
FREIGHT
TRACK CHART
SHEET 8

DISCIPLINE: FREIGHT

SHEET NAME: E1-FRT-CHT-008

SHEET 328 OF 420

Jan, 18 2016 11:52 am V:\3400_ADC\CAD\00_EAST\PLANSHEETS\TRACK\E1-FRT-CHT.dwg By: V-BurrellM

DESIGN SPEED | ALIGNMENT DATA | GENERAL INFORMATION | RAIL TYPE

STRUCT. TYPE | TRK 2 PROFILE DATA

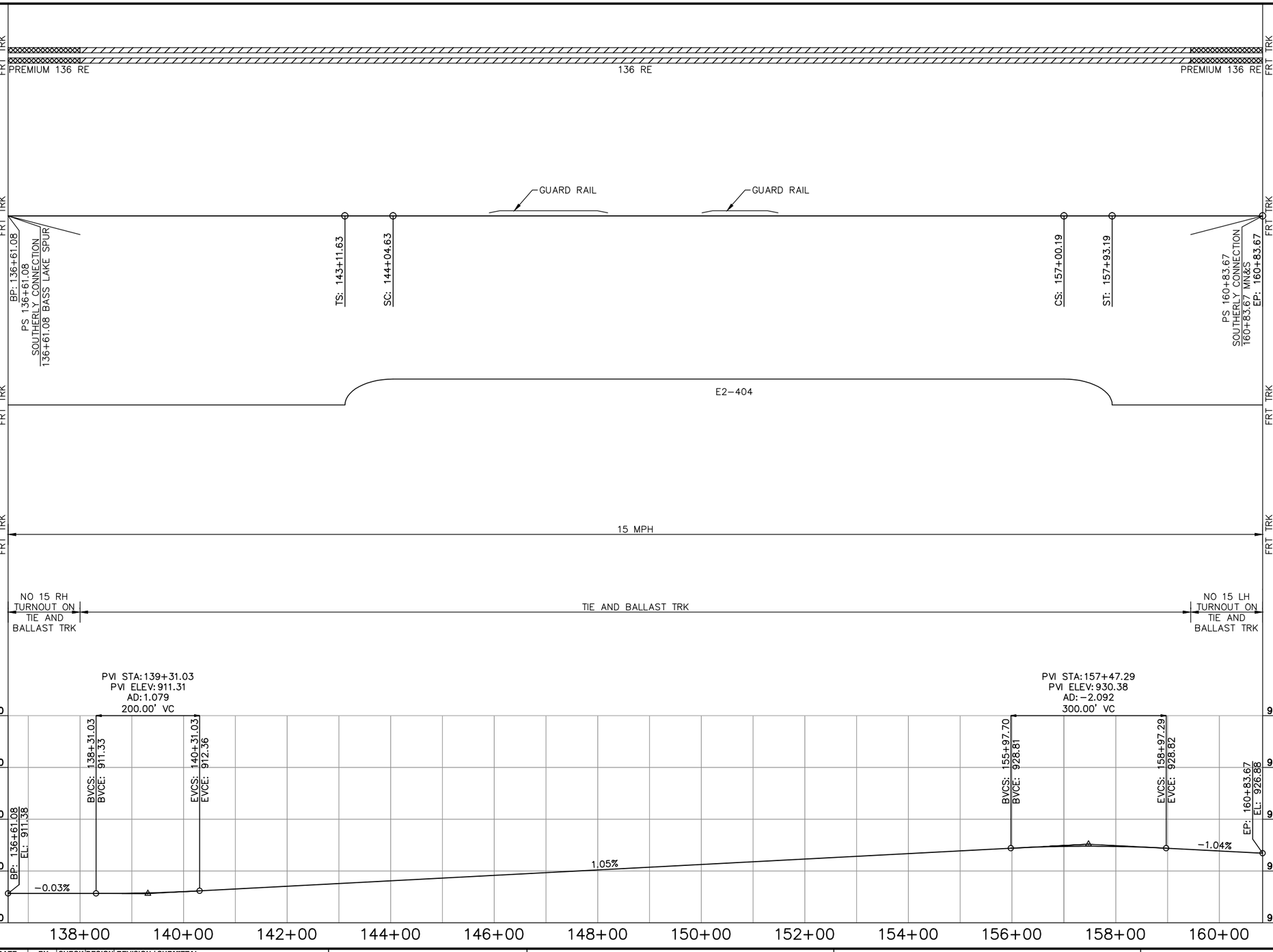

NO.	DATE	BY	CHECK	DESIGN	REVISION / SUBMITTAL

AECOM

90% SUBMISSION - 01/22/16

METROPOLITAN COUNCIL

SOUTHWEST Green Line LRT Extension

CIVIL - VOLUME 3B FREIGHT TRACK CHART SHEET 9

DISCIPLINE: FREIGHT

SHEET NAME: E2-FRT-CHT-001

SHEET 329 OF 420

Jan, 18 2016 11:52 am V:\3400_ADC\CAD\00_EAST\PLANSHEETS\TRACK\E2-FRT-CHT.dwg By: V-BurrellM

DESIGN SPEED | ALIGNMENT DATA | GENERAL INFORMATION | RAIL TYPE

STRUCT. TYPE | TRK 2 PROFILE DATA

FRT TRK

136 RE

WB CSAH 25 (W LAKE ST)

EB CSAH 25 (W LAKE ST)

BP: 300+00

TS: 303+61.09

SC: 304+23.09

CS: 310+15.32

ST: 310+77.32

TS: 315+22.17

SC: 315+84.17

CS: 319+97.29

ST: 320+59.29

CEDAR LAKE PKWY

TS: 326+70.62

SC: 327+01.62

CS: 329+11.40

ST: 329+42.40

GUARD RAIL

E3–110

E3–111

E3–112

25 MPH

TIE AND BALLAST TRK

CROSSING PANEL

TIE AND BALLAST TRK

PVI STA: 307+64.60
PVI ELEV: 872.97
AD: 0.298
100.00' VC

PVI STA: 312+00.00
PVI ELEV: 874.83
AD: −0.623
400.00' VC

PVI STA: 330+00.00
PVI ELEV: 871.28
AD: −0.078
200.00' VC

BP: 300+00.00

BVCS: 307+14.60
BVCE: 872.90

EVCS: 308+14.60
EVCE: 873.18

BVCS: 310+00.09
BVCE: 873.97

EVCS: 314+00.00
EVCE: 874.43

BVCS: 329+00.00
BVCE: 871.48

0.13%

0.43%

−0.20%

920
900
880
860
840

300+00 302+00 304+00 306+00 308+00 310+00 312+00 314+00 316+00 318+00 320+00 322+00 324+00 326+00 328+00 330+00

NO.	DATE	BY	CHECK	DESIGN	REVISION / SUBMITTAL

AECOM

90% SUBMISSION - 01/22/16

METROPOLITAN COUNCIL

SOUTHWEST Green Line LRT Extension

CIVIL - VOLUME 3B
FREIGHT
TRACK CHART
SHEET 10

DISCIPLINE: FREIGHT

SHEET NAME: E3-FRT-CHT-001

SHEET 330 OF 420

Jan, 18 2016 11:53 am V:\3400_ADC\CAD\00_EAST\PLANSHEETS\TRACK\E3-FRT-CHT.dwg By: V-BurrellM

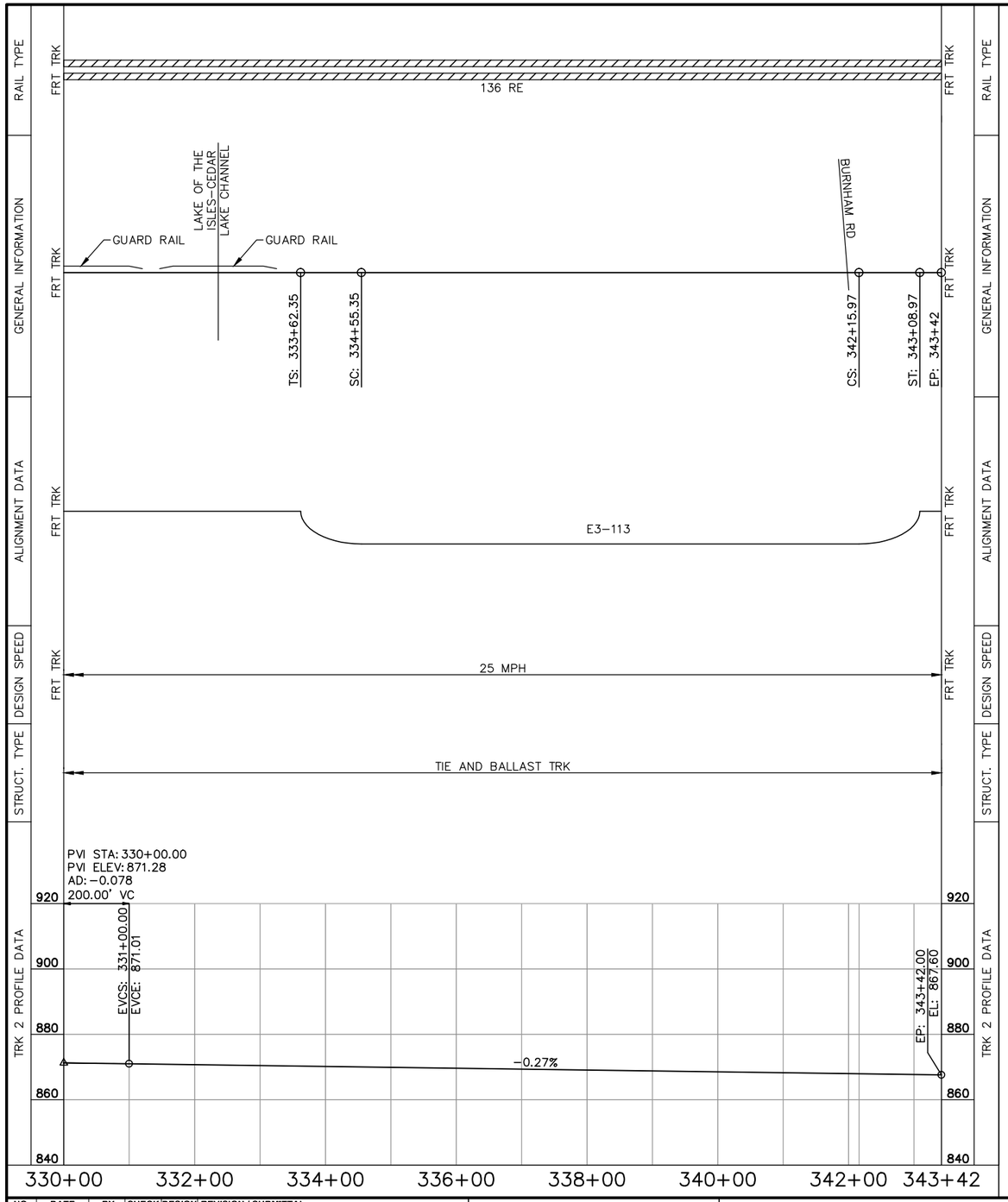

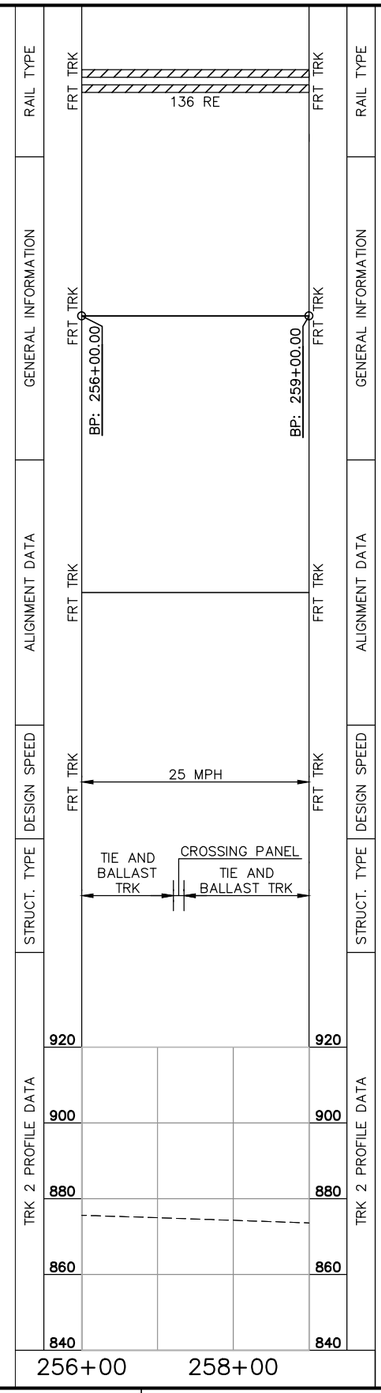

NO.	DATE	BY	CHECK	DESIGN	REVISION / SUBMITTAL

AECOM

90% SUBMISSION - 01/22/16

METROPOLITAN COUNCIL

SOUTHWEST Green Line LRT Extension

CIVIL - VOLUME 3B FREIGHT TRACK CHART SHEET 11

DISCIPLINE: FREIGHT

SHEET NAME: E3-FRT-CHT-002

SHEET 331 OF 420

Jan, 18 2016 11:53 am V:\3400_ADC\CAD\00_EAST\PLANSHEETS\TRACK\E3-FRT-CHT.dwg By: V-BurrellM

RAIL TYPE | GENERAL INFORMATION | ALIGNMENT DATA | DESIGN SPEED | STRUCT. TYPE | TRK 2 PROFILE DATA

FRT TRK

136 RE

W FRONTAGE RD
RAMP 9-A
EB TH 94
WB TH 94
RAMP C
RAMP 14
E FRONTAGE RD
CSAH 40 (GLENWOOD AVE)
SWLRT TRACK 1
SWLRT TRACK 2
ROYALSTON AVE N

BP: 92+38.68
TS: 93+38.68
SC: 94+00.68
CS: 95+77.57
ST: 96+39.57
TS: 101+38.74
SC: 102+00.74
CS: 104+24.03
ST: 104+86.03
TS: 107+26.66
SC: 108+86.66
CS: 114+23.10
ST: 115+23.10
TS: 116+69.08
SC: 117+69.08
CS: 119+47.63
ST: 120+47.63

E4-401 | E4-402 | E4-403 | E4-404

25 MPH

TIE AND BALLAST TRK

PVI STA: 94+50.00
PVI ELEV: 822.34
AD: 0.048
200.00' VC

LOW POINT ELEV: 820.39
LOW POINT STA: 109+00.00
PVI STA: 112+00.00
PVI ELEV: 819.72
AD: 0.600
1200.00' VC

PVI STA: 122+96.97
PVI ELEV: 824.65
AD: -0.400
400.00' VC

BP: 92+38.68
EL: 822.76
BVCS: 93+50.00
BVCE: 822.54
EVCS: 95+50.00
EVCE: 822.19
BVCS: 106+00.00
BVCE: 820.62
EVCS: 117+99.98
EVCE: 822.42
BVCS: 120+96.97
BVCE: 823.75

880 | 860 | 840 | 820 | 800

-0.20% | -0.15% | 0.45%

92+38.67 | 94+00 | 96+00 | 98+00 | 100+00 | 102+00 | 104+00 | 106+00 | 108+00 | 110+00 | 112+00 | 114+00 | 116+00 | 118+00 | 120+00 | 122+00

NO.	DATE	BY	CHECK	DESIGN	REVISION / SUBMITTAL

AECOM

90% SUBMISSION - 01/22/16

METROPOLITAN COUNCIL

SOUTHWEST Green Line LRT Extension

CIVIL - VOLUME 3B
FREIGHT
TRACK CHART
SHEET 12

DISCIPLINE: FREIGHT

SHEET NAME: E4-FRT-CHT-001

SHEET 332 OF 420

Jan, 18 2016 11:54 am V:\3400_ADC\CAD\00_EAST\PLANSHEETS\TRACK\E4-FRT-CHT.dwg By: V-BurrellM

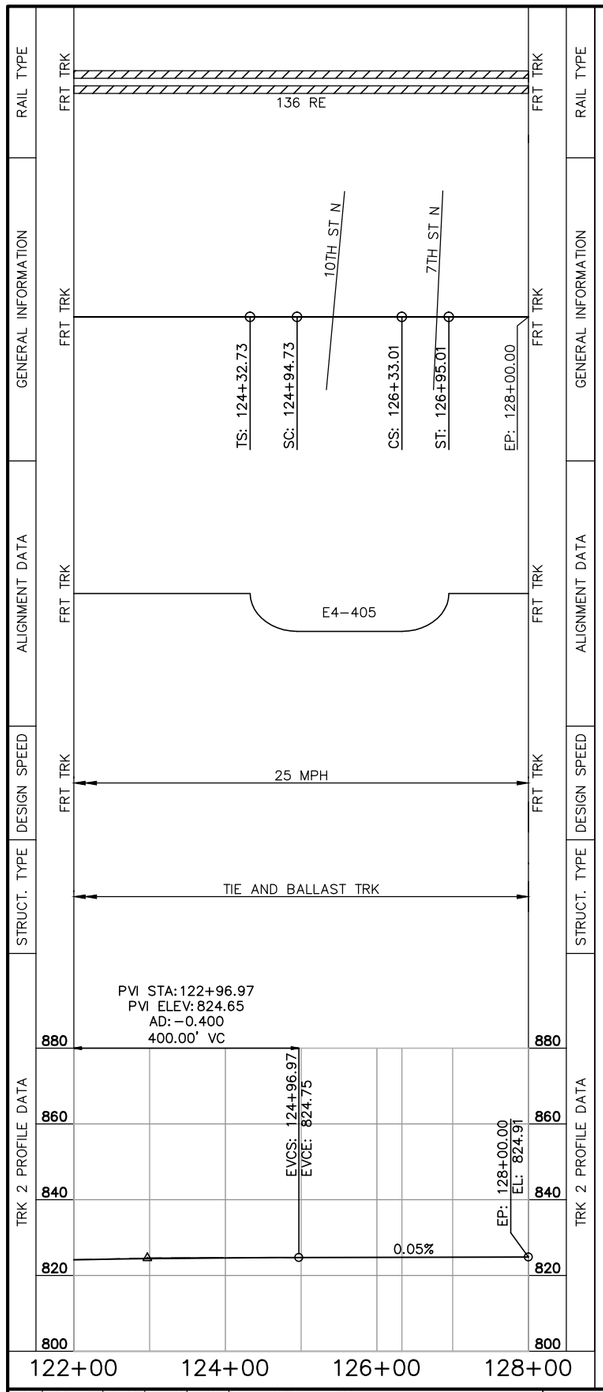

Jan, 18 2016 11:54 am V:\3400_ADC\CAD\00_EAST\PLANSHEETS\TRACK\E4-FRT-CHT.dwg By: V-BurrellM

NO.	DATE	BY	CHECK	DESIGN	REVISION / SUBMITTAL

AECOM

90% SUBMISSION - 01/22/16

METROPOLITAN COUNCIL

SOUTHWEST Green Line LRT Extension

CIVIL - VOLUME 3B
FREIGHT
TRACK CHART
SHEET 13

DISCIPLINE: FREIGHT

SHEET NAME: E4-FRT-CHT-002

SHEET 333 OF 420

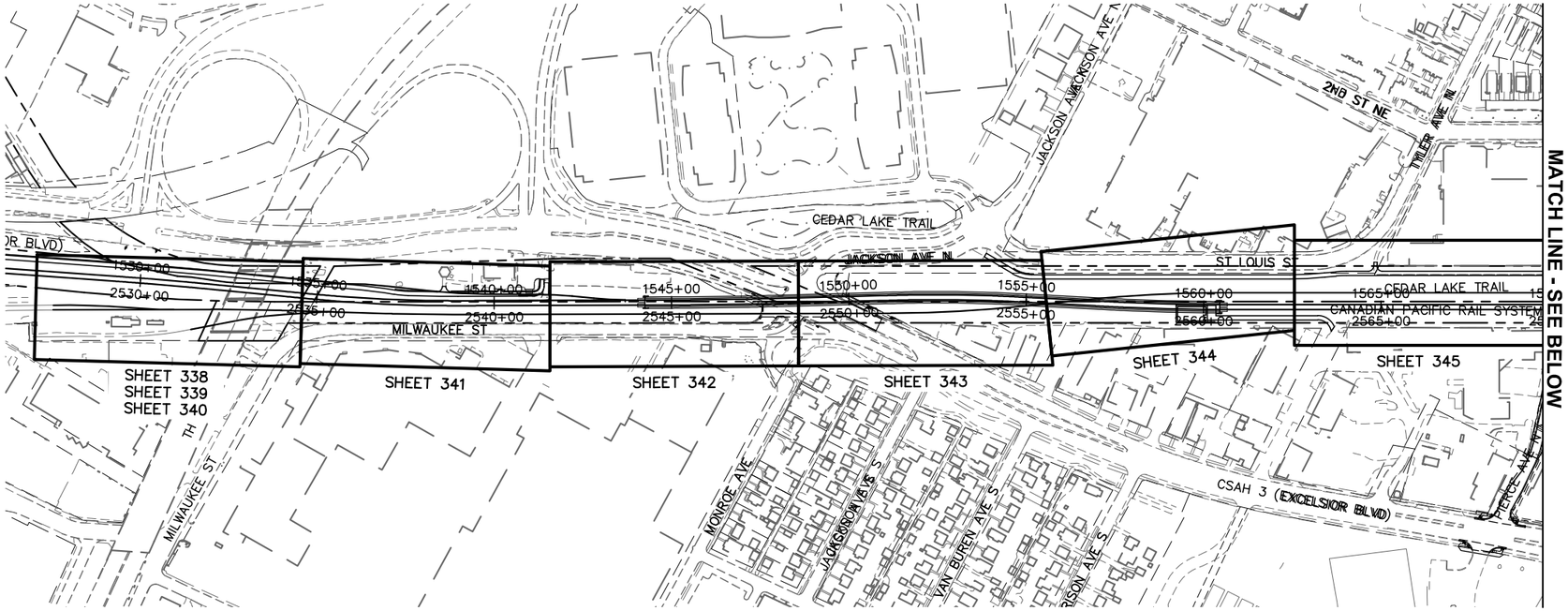

MATCH LINE - SEE BELOW

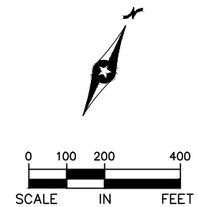

MATCH LINE - SEE ABOVE

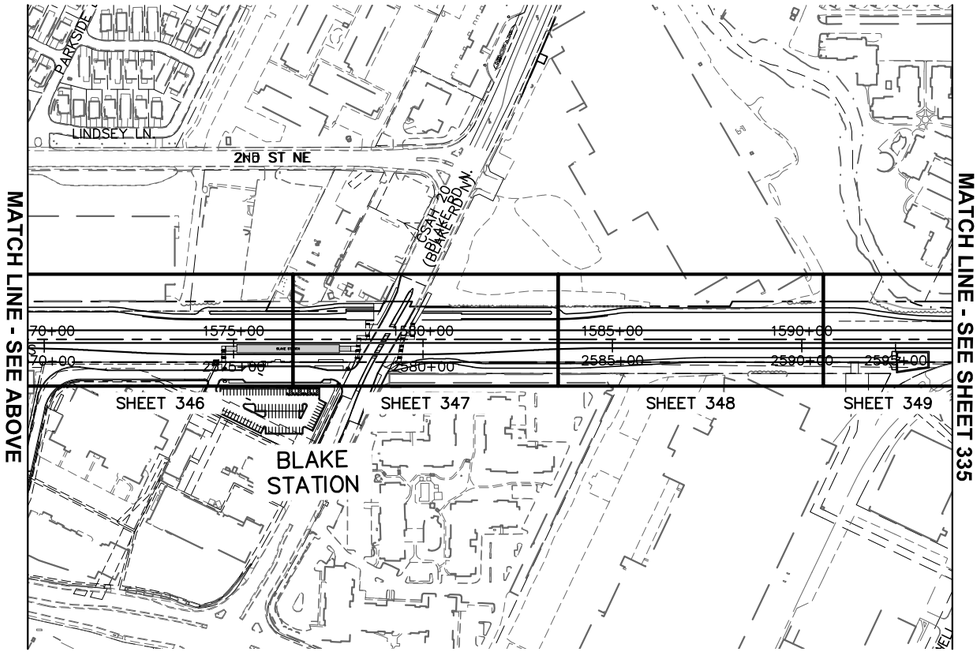

MATCH LINE - SEE SHEET 335

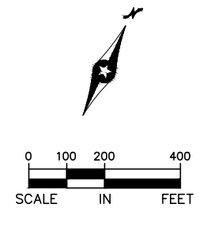

NO.	DATE	BY	CHECK	DESIGN	REVISION / SUBMITTAL

AECOM

90% SUBMISSION - 01/22/16

METROPOLITAN COUNCIL

SOUTHWEST Green Line LRT Extension

CIVIL - VOLUME 3B
FREIGHT
PLAN SHEET LAYOUT
SHEET 1

DISCIPLINE: TRACK

SHEET NAME: E0-FRT-LAY-001

SHEET 334 OF 420

Jan, 18 2016 11:30 am V:\3400_ADC\CAD\00_EAST\PLANSHEETS\TRACK\E0-FRT-LAY.dwg By: V-RasulL

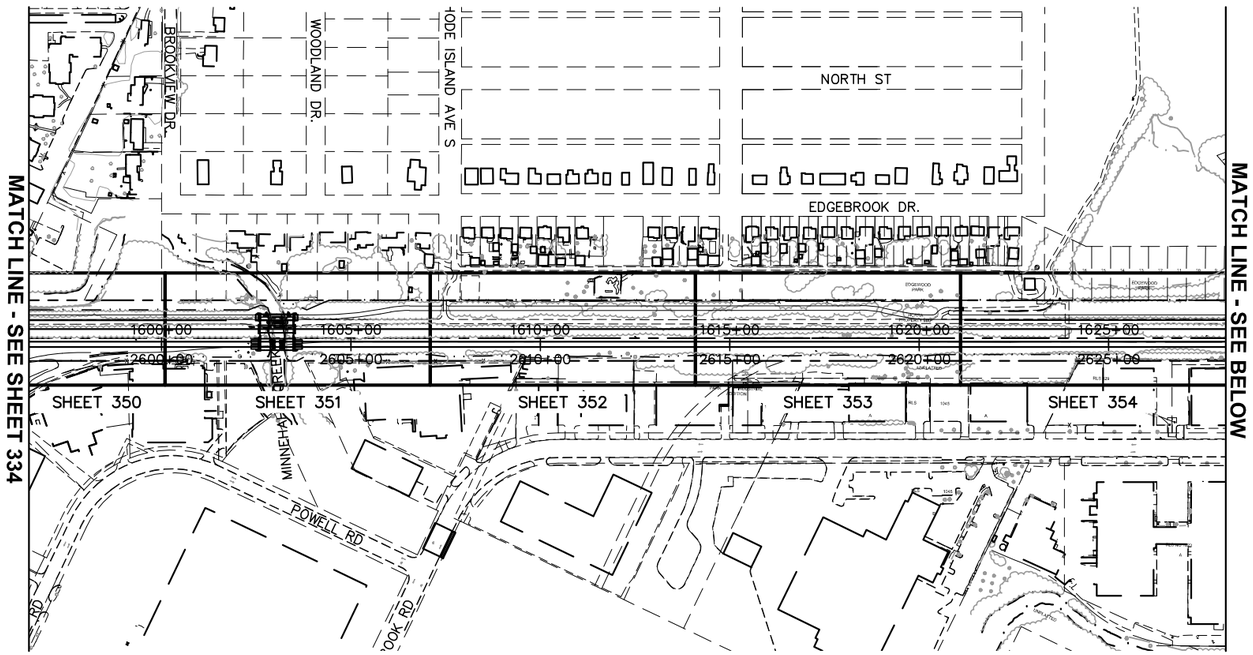

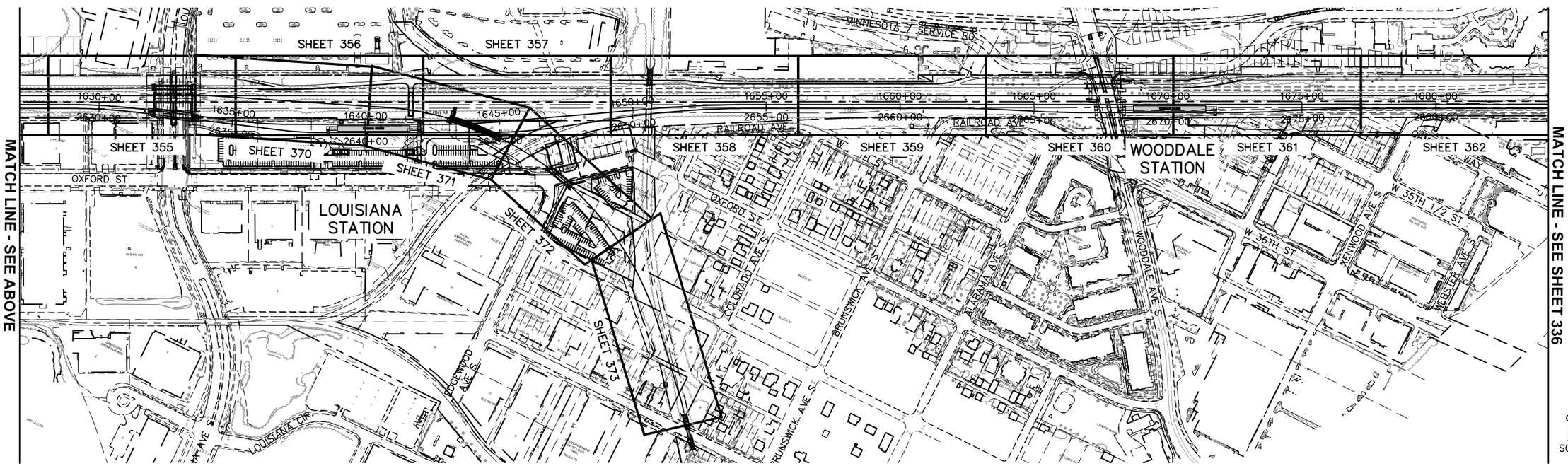

NO.	DATE	BY	CHECK	DESIGN	REVISION / SUBMITTAL

AECOM

90% SUBMISSION - 01/22/16

METROPOLITAN COUNCIL

SOUTHWEST Green Line LRT Extension

CIVIL - VOLUME 3B
FREIGHT
PLAN SHEET LAYOUT
SHEET 2

DISCIPLINE: TRACK

SHEET NAME: E0-FRT-LAY-002

SHEET 335 OF 420

Jan, 18 2016 11:32 am V:\3400_ADC\CAD\00_EAST\PLANSHEETS\TRACK\E0-FRT-LAY.dwg By: V-RasulL

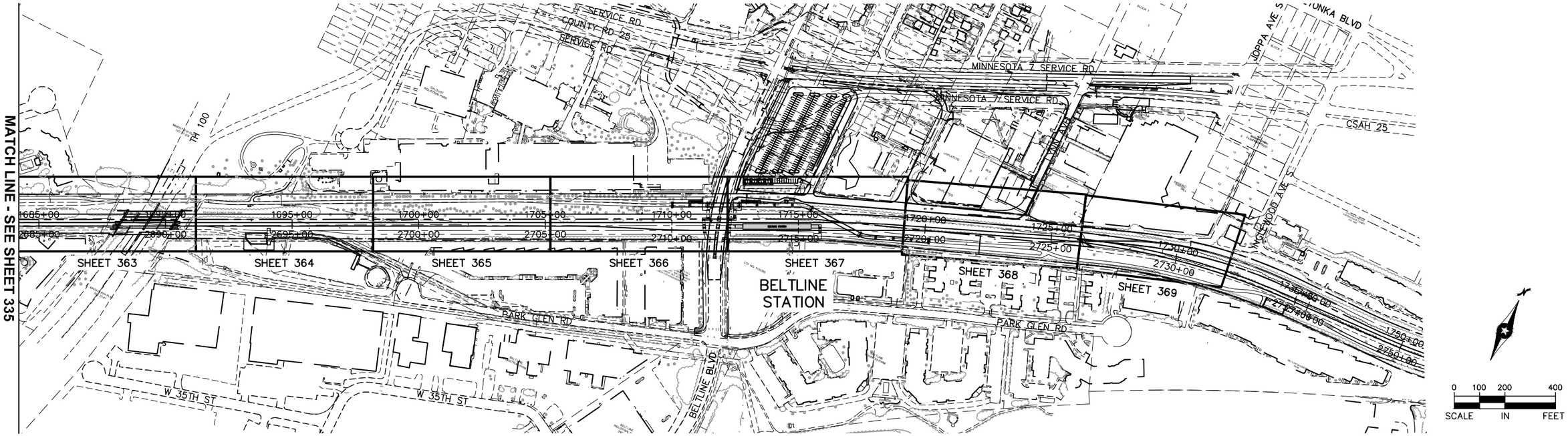

Jan, 18 2016 11:34 am V:\3400_ADC\CAD\00_EAST\PLANSHEETS\TRACK\E0-FRT-LAY.dwg By: V-RasulL

NO.	DATE	BY	CHECK	DESIGN	REVISION / SUBMITTAL

AECOM

90% SUBMISSION - 01/22/16

METROPOLITAN COUNCIL

SOUTHWEST Green Line LRT Extension

CIVIL - VOLUME 3B
FREIGHT
PLAN SHEET LAYOUT
SHEET 3

DISCIPLINE: TRACK

SHEET NAME: E0-FRT-LAY-003

SHEET 336 OF 420

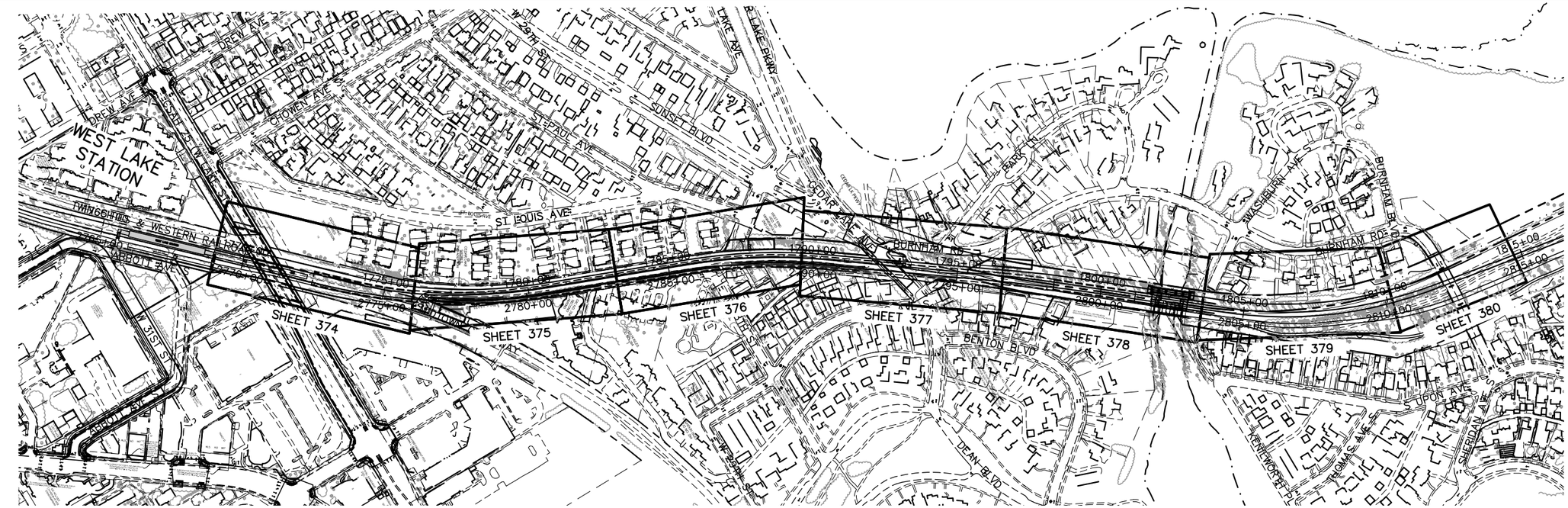

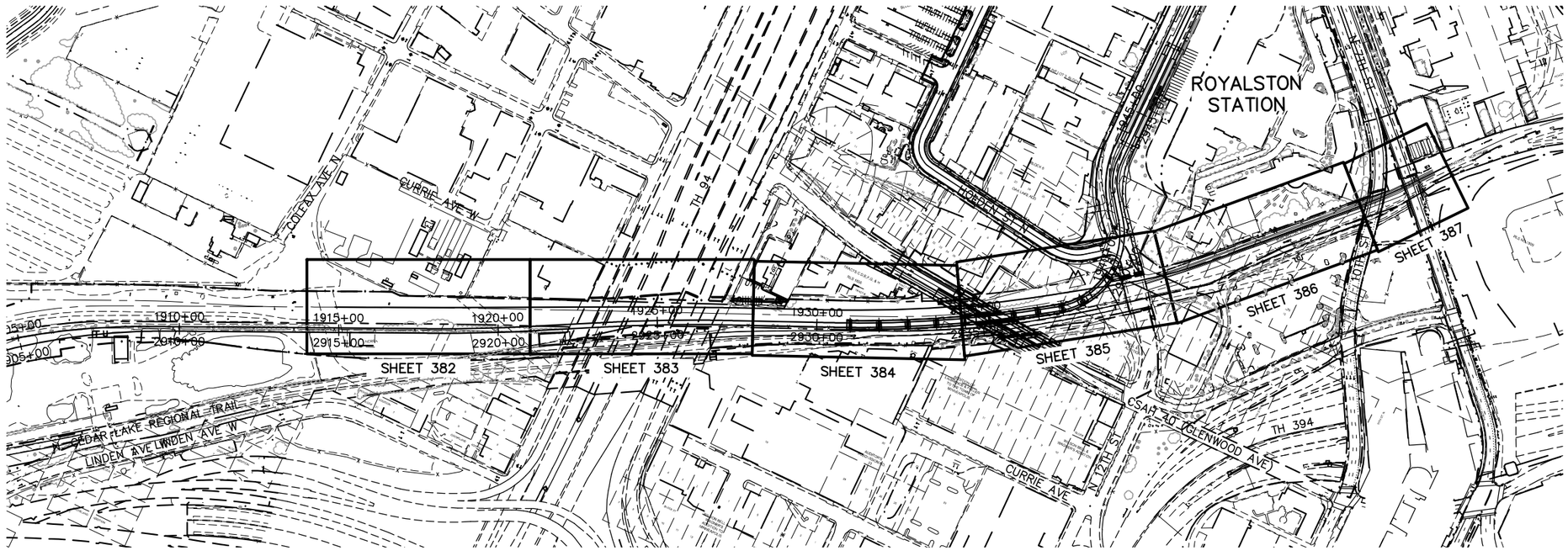

NO.	DATE	BY	CHECK	DESIGN	REVISION / SUBMITTAL

AECOM

90% SUBMISSION - 01/22/16

METROPOLITAN COUNCIL

SOUTHWEST Green Line LRT Extension

CIVIL - VOLUME 3B
FREIGHT
PLAN SHEET LAYOUT
SHEET 4

DISCIPLINE: TRACK

SHEET NAME: E0-FRT-LAY-004

SHEET 337 OF 420

Jan, 18 2016 11:37 am V:\3400_ADC\CAD\00_EAST\PLANSHEETS\TRACK\E0-FRT-LAY.dwg By: V-RasulL

CURVE E1–405
Dc = 3° 30' 00" RH
R = 1,637.28'
Lc = 108.77'
Ea = 0.00"
Eu = 0.55"
V = 15 MPH

CURVE E1–406
Dc = 6° 00' 00" RH
R = 955.37'
Lc = 123.76'
Ea = 0.00"
Eu = 0.95"
V = 15 MPH

CURVE E1–401
Dc = 1° 00' 00" RH
R = 5,729.65'
Lc = 157.84'
Ls = 31.00'
Ea = 0.00"
Eu = 0.44"
V = 25 MPH

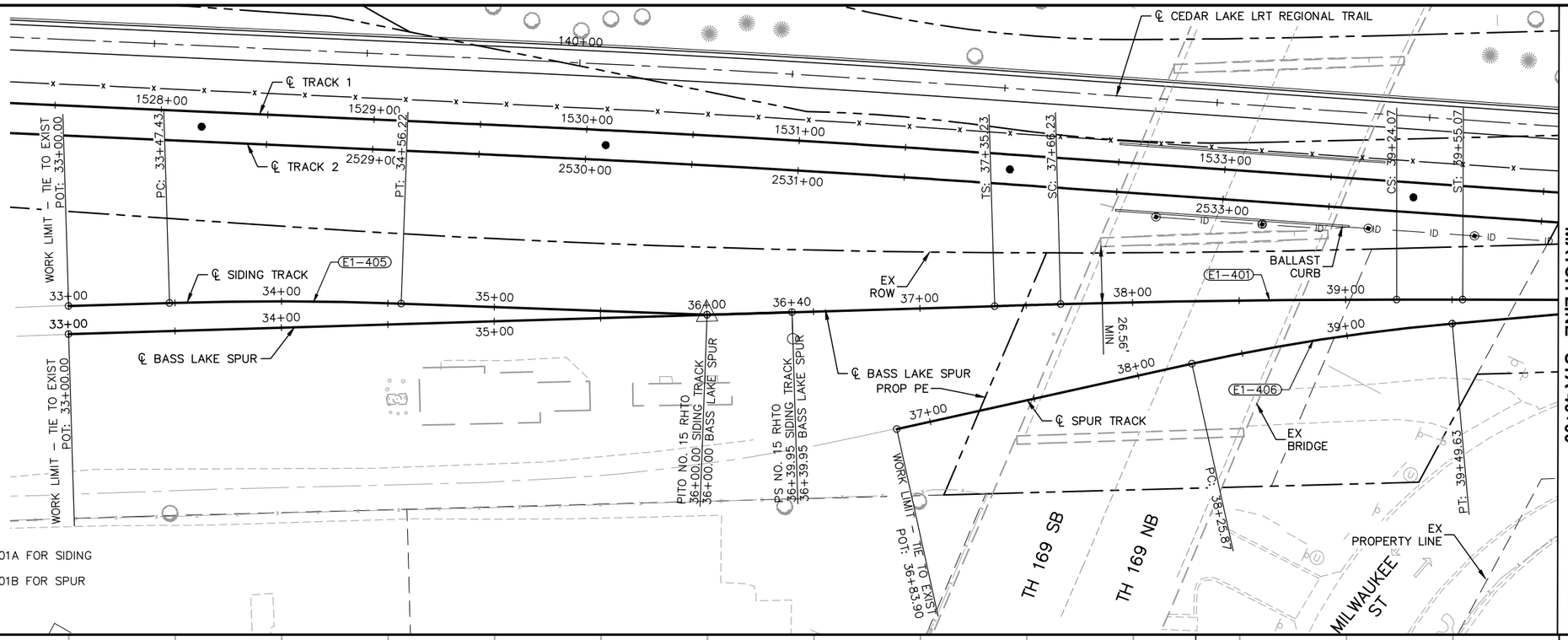

NOTES:
1. SEE SHEET E1–FRT–PRF–001A FOR SIDING TRACK PROFILE.
2. SEE SHEET E1–FRT–PRF–001B FOR SPUR TRACK PROFILE.

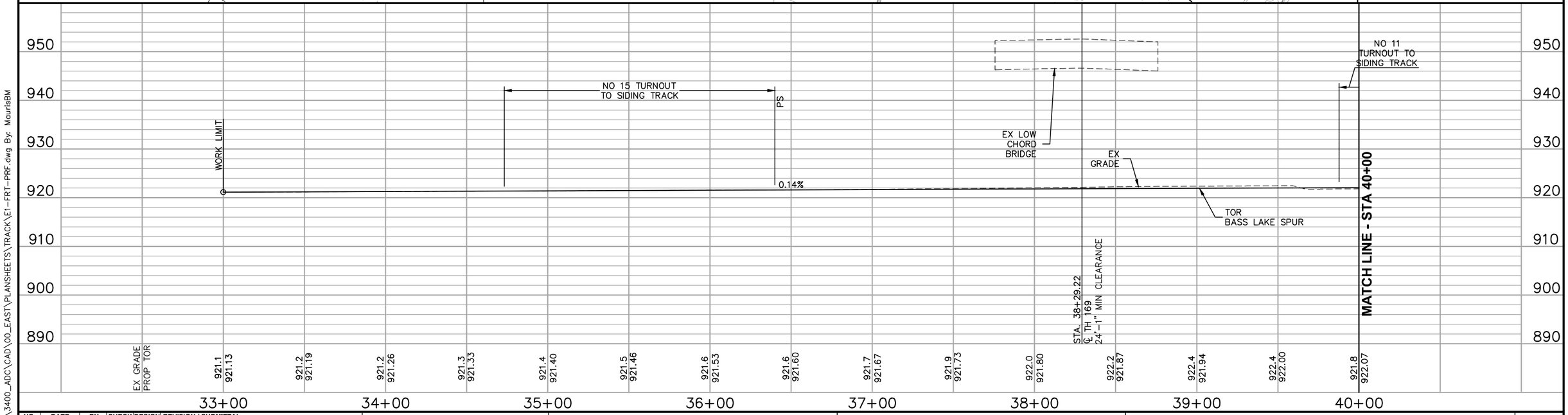

NO.	DATE	BY	CHECK	DESIGN	REVISION / SUBMITTAL

AECOM

90% SUBMISSION - 01/22/16

METROPOLITAN COUNCIL

SOUTHWEST Green Line LRT Extension

CIVIL - VOLUME 3B
FREIGHT
PLAN AND PROFILE
STA 33+00 TO STA 40+00

DISCIPLINE: TRACK

SHEET NAME: E1-FRT-PRF - 001

SHEET 338 OF 420

Jan, 18 2016 10:41 am V:\3400_ADC\CAD\00_EAST\PLANSHEETS\TRACK\E1-FRT-PRF.dwg By: MaurisBM

SEE SHEET E1-FRT-PRF - 001 FOR PLAN VIEW

0 5 10 20
VERTICAL
0 15 30 60
HORIZONTAL
SCALE IN FEET

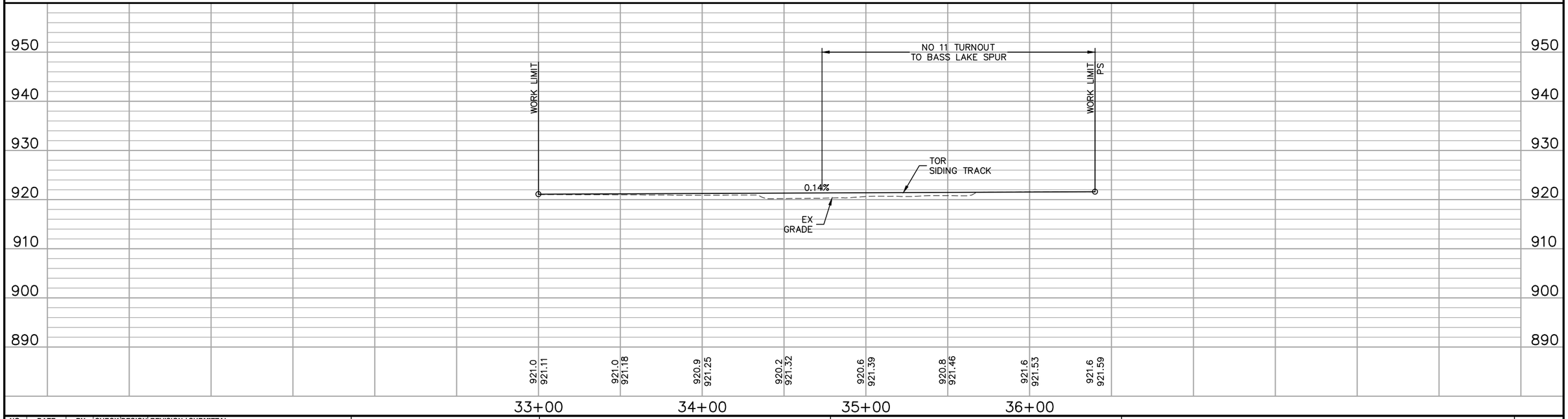

NO.	DATE	BY	CHECK	DESIGN	REVISION / SUBMITTAL

AECOM

90% SUBMISSION - 01/22/16

METROPOLITAN COUNCIL

SOUTHWEST Green Line LRT Extension

CIVIL - VOLUME 3B
FREIGHT
PLAN AND PROFILE
STA 33+00 TO STA 36+39.95

DISCIPLINE: TRACK

SHEET NAME: E1-FRT-PRF-001A

SHEET 339 OF 420

Jan, 18 2016 10:41 am V:\3400_ADC\CAD\00_EAST\PLANSHEETS\TRACK\E1-FRT-PRF.dwg By: MaurisBM

SEE SHEET E1-FRT-PRF - 001 AND
E1-FRT-PRF - 002 FOR PLAN VIEW

0 5 10 20
VERTICAL
0 15 30 60
HORIZONTAL
SCALE IN FEET

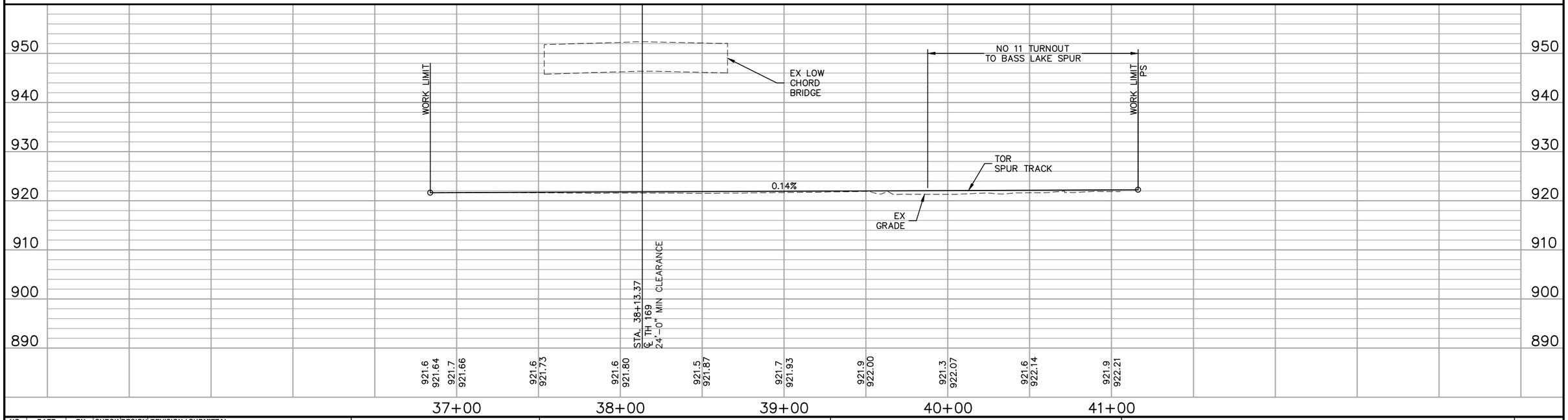

NO.	DATE	BY	CHECK	DESIGN	REVISION / SUBMITTAL

AECOM

90% SUBMISSION - 01/22/16

METROPOLITAN COUNCIL

SOUTHWEST Green Line LRT Extension

CIVIL - VOLUME 3B
FREIGHT
PLAN AND PROFILE
STA 36+83.90 TO STA 41+16.21

DISCIPLINE: TRACK

SHEET NAME: E1-FRT-PRF-001B

SHEET 340 OF 420

Jan, 18 2016 10:42 am V:\3400_ADC\CAD\00_EAST\PLANSHEETS\TRACK\E1-FRT-PRF.dwg By: MaurisBM

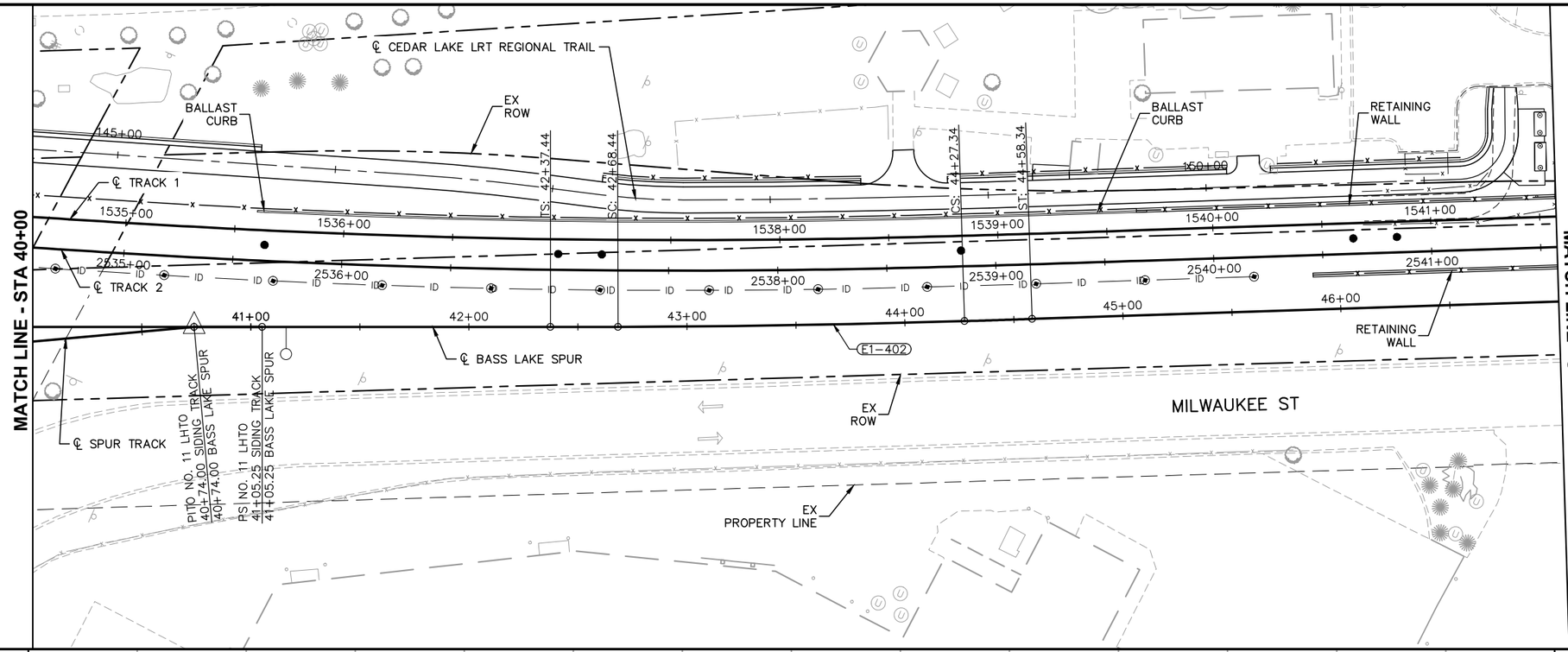

CURVE E1-402
Dc = 1° 00' 00" LH
R = 5,729.65'
Lc = 158.90'
Ls = 31.00'
Ea = 0.00"
Eu = 0.44"
V = 25 MPH

0 5 10 20
VERTICAL
0 15 30 60
HORIZONTAL
SCALE IN FEET

NOTES:
1. SEE SHEET E1-FRT-PRF-001B FOR SPUR TRACK PROFILE.

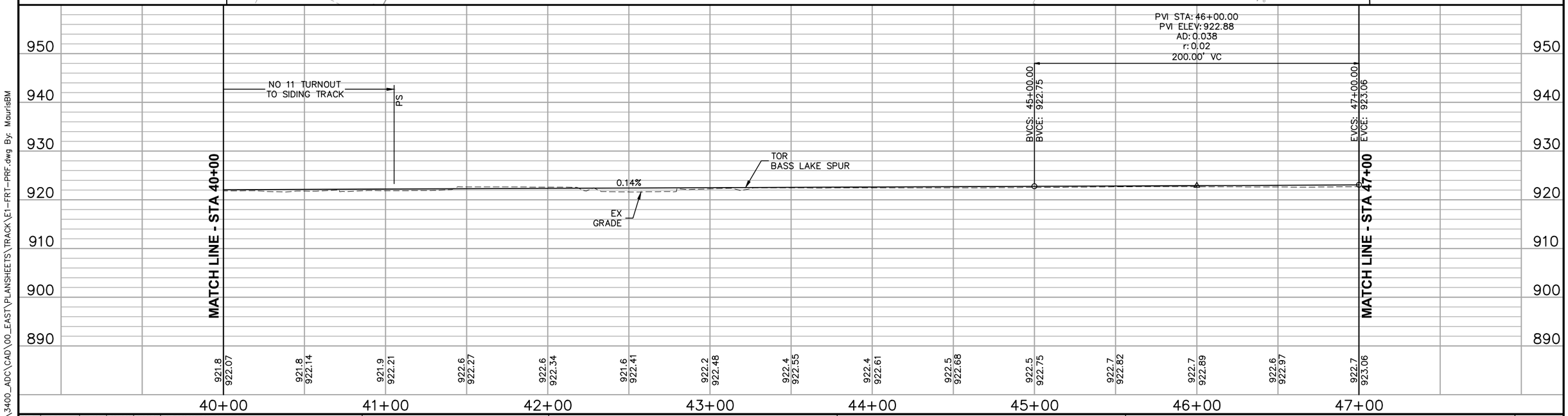

NO.	DATE	BY	CHECK	DESIGN	REVISION / SUBMITTAL

AECOM

90% SUBMISSION - 01/22/16

METROPOLITAN COUNCIL

SOUTHWEST Green Line LRT Extension

CIVIL - VOLUME 3B
FREIGHT
PLAN AND PROFILE
STA 40+00 TO STA 47+00

DISCIPLINE: TRACK

SHEET NAME: E1-FRT-PRF - 002

SHEET 341 OF 420

Jan, 18 2016 10:44 am V:\3400_ADC\CAD\00_EAST\PLANSHEETS\TRACK\E1-FRT-PRF.dwg By: MaurisBM

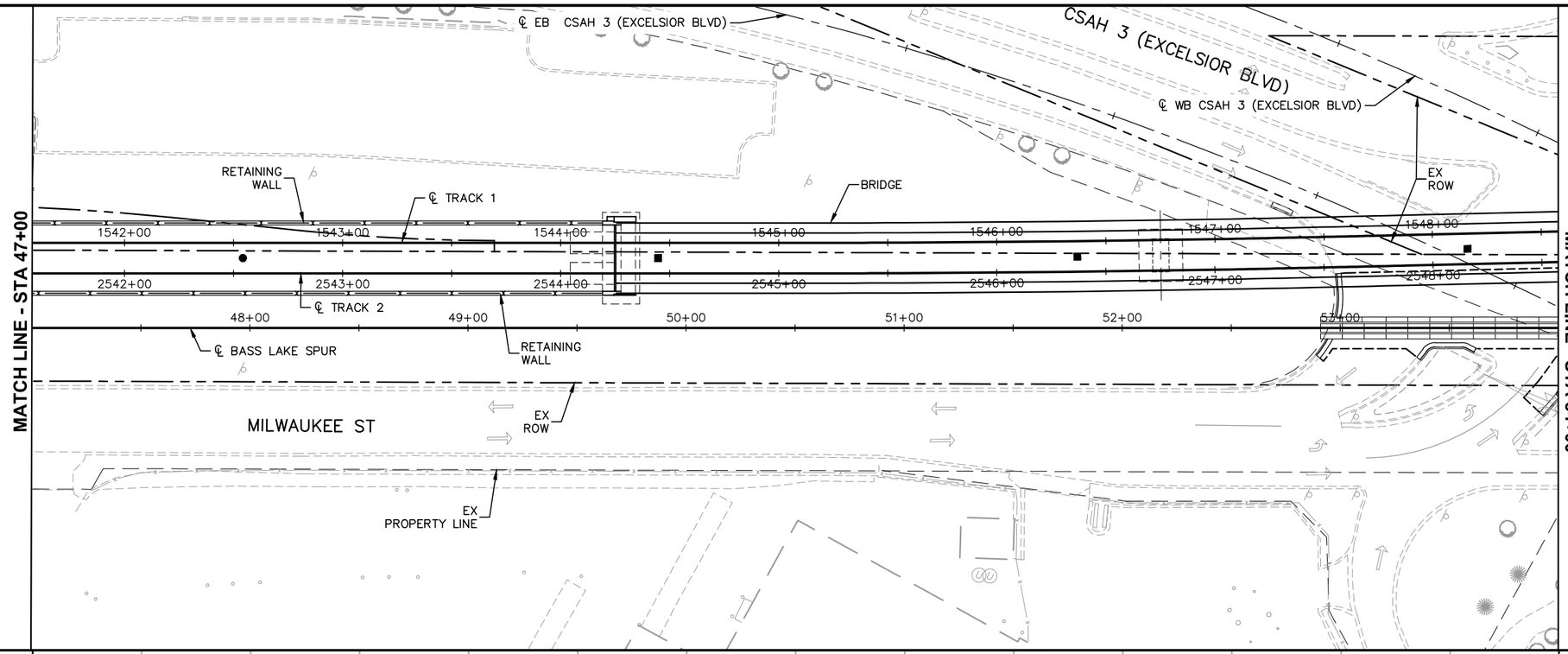

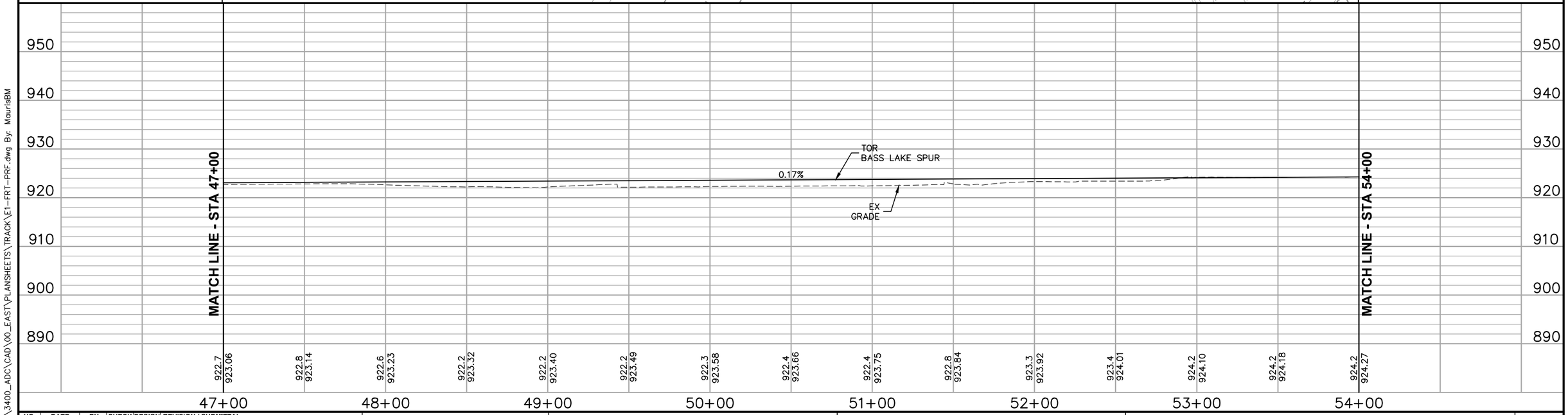

0 5 10 20
VERTICAL
0 15 30 60
HORIZONTAL
SCALE IN FEET

NO.	DATE	BY	CHECK	DESIGN	REVISION / SUBMITTAL

AECOM

90% SUBMISSION - 01/22/16

METROPOLITAN COUNCIL

SOUTHWEST Green Line LRT Extension

CIVIL - VOLUME 3B
FREIGHT
PLAN AND PROFILE
STA 47+00 TO STA 54+00

DISCIPLINE: TRACK

SHEET NAME: E1-FRT-PRF - 003

SHEET 342 OF 420

Jan, 18 2016 10:46 am V:\3400_ADC\CAD\00_EAST\PLANSHEETS\TRACK\E1-FRT-PRF.dwg By: MaurisBM

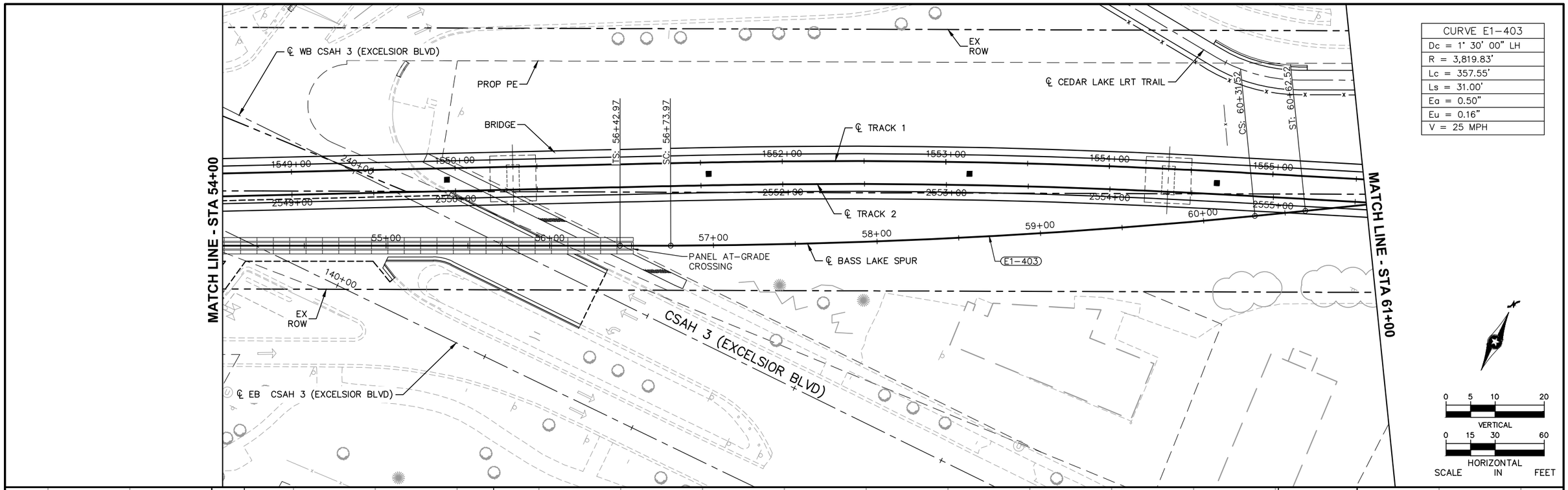

NO.	DATE	BY	CHECK	DESIGN	REVISION / SUBMITTAL

AECOM

90% SUBMISSION - 01/22/16

METROPOLITAN COUNCIL

SOUTHWEST Green Line LRT Extension

CIVIL - VOLUME 3B
FREIGHT
PLAN AND PROFILE
STA 54+00 TO STA 61+00

DISCIPLINE: TRACK

SHEET NAME: E1-FRT-PRF - 004

SHEET 343 OF 420

Jan, 18 2016 10:48 am V:\3400_ADC\CAD\00_EAST\PLANSHEETS\TRACK\E1-FRT-PRF.dwg By: MaurisBM

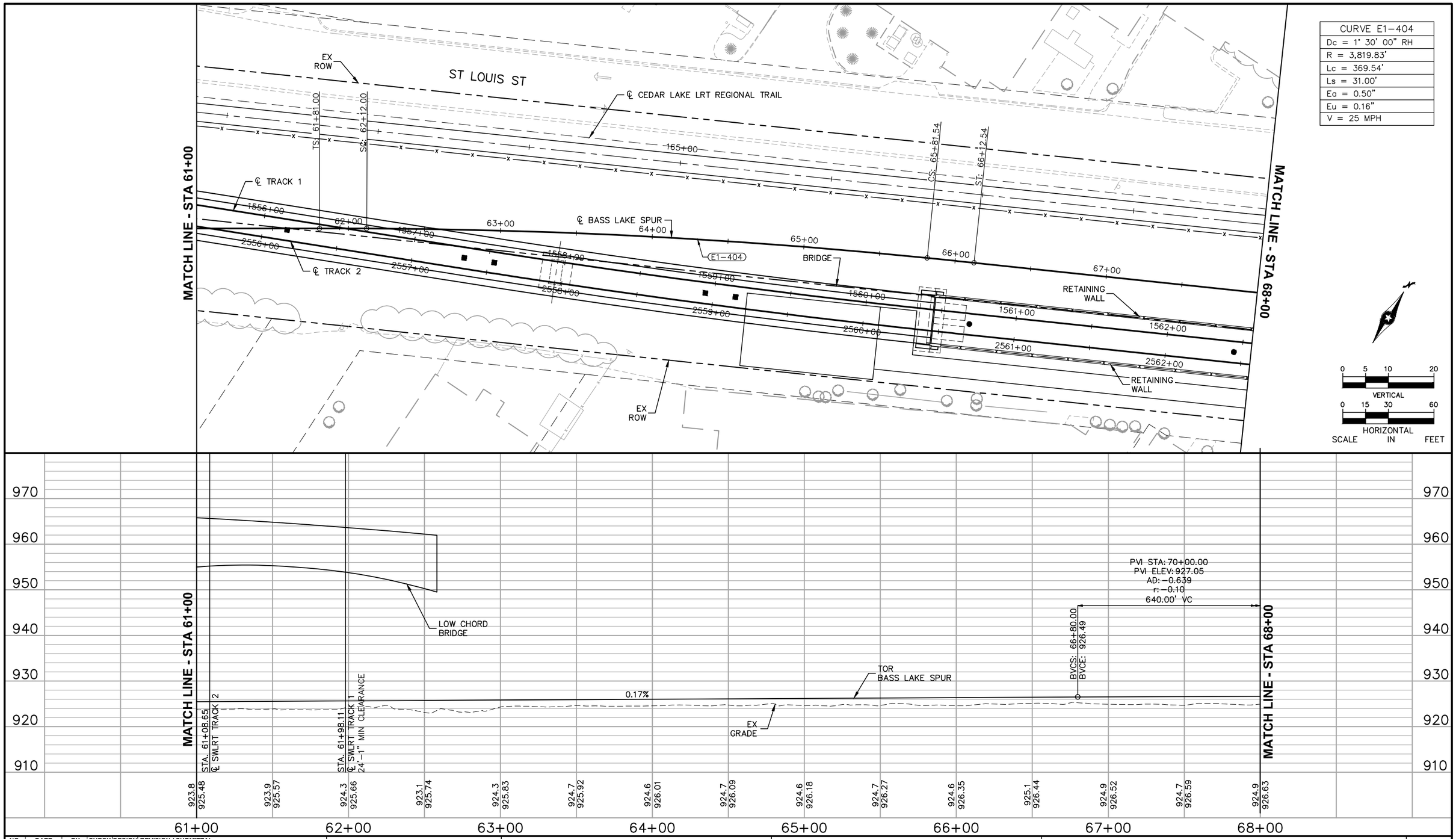

NO.	DATE	BY	CHECK	DESIGN	REVISION / SUBMITTAL

90% SUBMISSION - 01/22/16

AECOM

METROPOLITAN COUNCIL

SOUTHWEST Green Line LRT Extension

CIVIL - VOLUME 3B FREIGHT PLAN AND PROFILE STA 61+00 TO STA 68+00

DISCIPLINE: TRACK

SHEET NAME: E1-FRT-PRF - 005

SHEET 344 OF 420

Jan, 18 2016 10:50 am V:\3400_ADC\CAD\00_EAST\PLANSHEETS\TRACK\E1-FRT-PRF.dwg By: MaurisBM

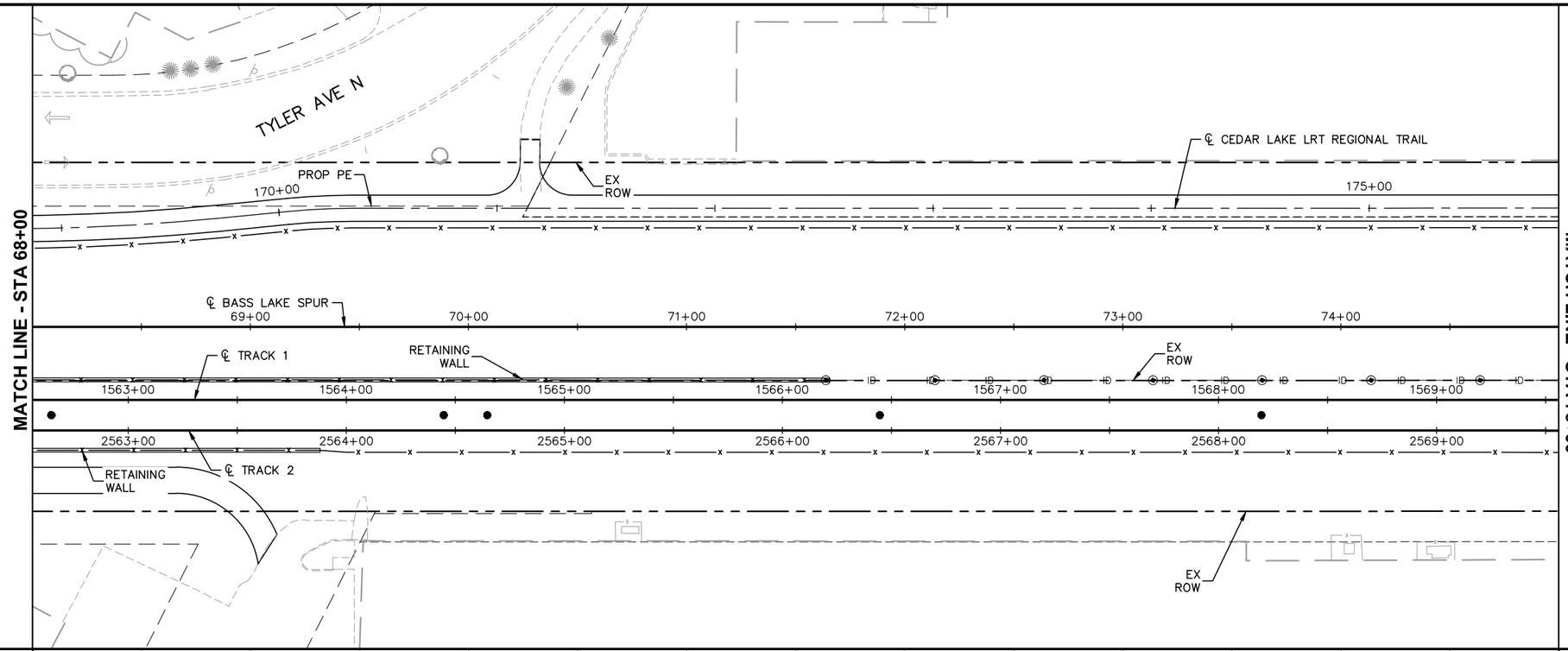

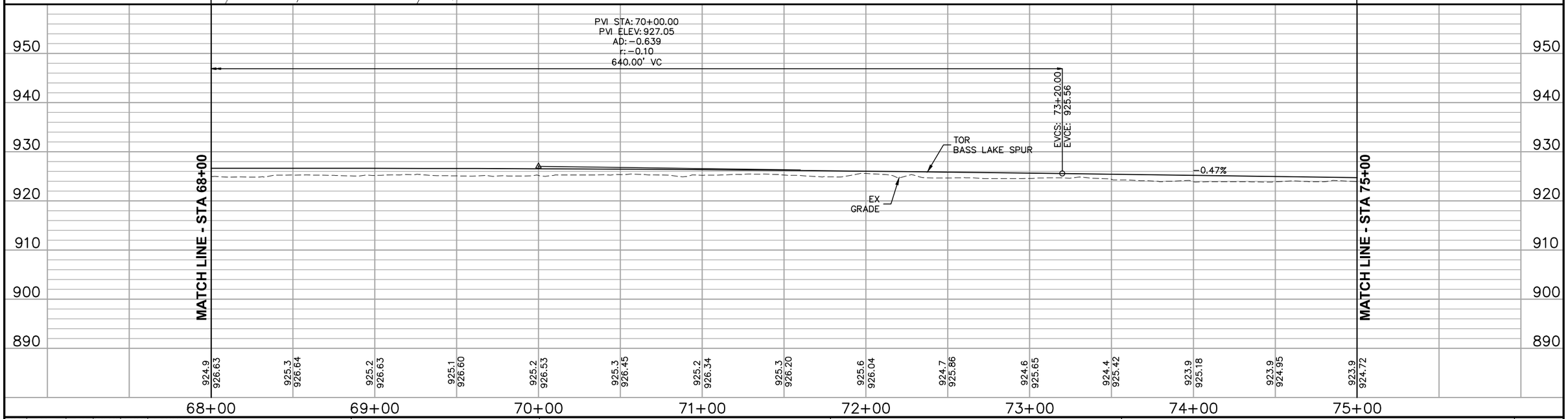

NO.	DATE	BY	CHECK	DESIGN	REVISION / SUBMITTAL

AECOM

90% SUBMISSION - 01/22/16

METROPOLITAN COUNCIL

SOUTHWEST Green Line LRT Extension

CIVIL - VOLUME 3B
FREIGHT
PLAN AND PROFILE
STA 68+00 TO STA 75+00

DISCIPLINE: TRACK

SHEET NAME: E1-FRT-PRF - 006

SHEET 345 OF 420

Jan, 18 2016 10:52 am V:\3400_ADC\CAD\00_EAST\PLANSHEETS\TRACK\E1-FRT-PRF.dwg By: MaurisBM

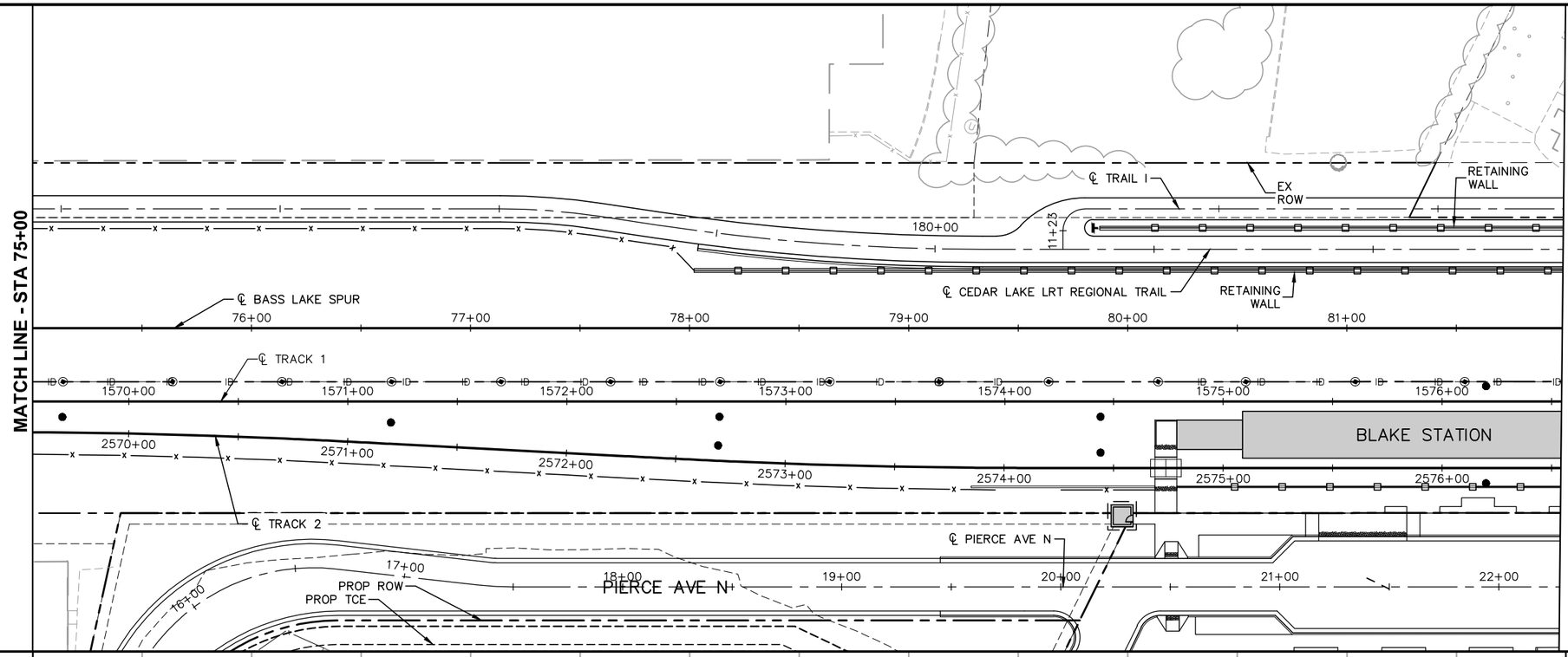

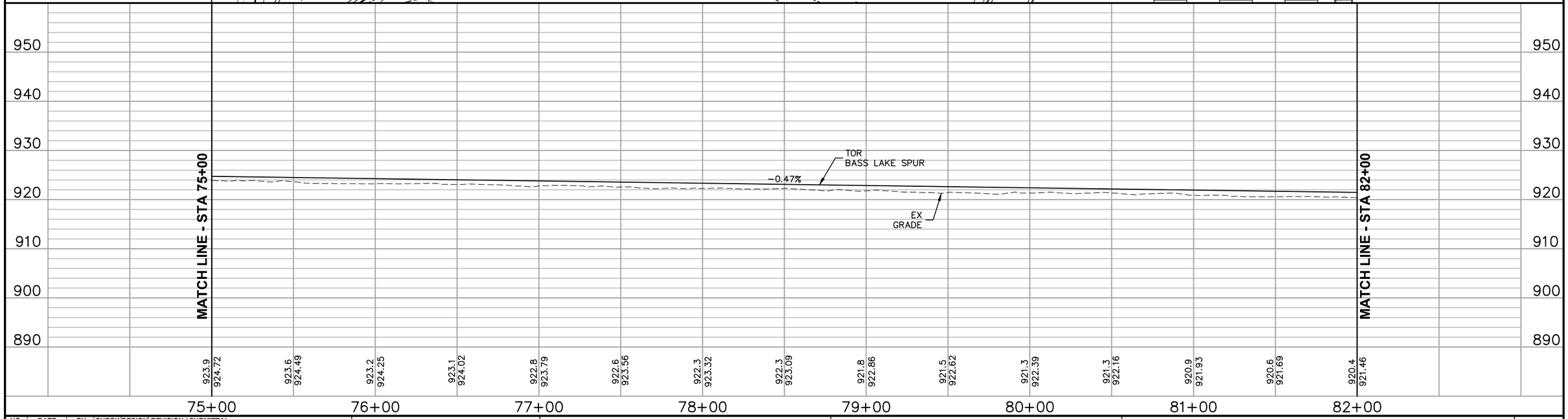

NO.	DATE	BY	CHECK	DESIGN	REVISION / SUBMITTAL

AECOM

90% SUBMISSION - 01/22/16

METROPOLITAN COUNCIL

SOUTHWEST Green Line LRT Extension

CIVIL - VOLUME 3B
FREIGHT
PLAN AND PROFILE
STA 75+00 TO STA 82+00

DISCIPLINE: TRACK

SHEET NAME: E1-FRT-PRF - 007

SHEET 346 OF 420

Jan, 18 2016 10:54 am V:\3400_ADC\CAD\00_EAST\PLANSHEETS\TRACK\E1-FRT-PRF.dwg By: MaurisBM

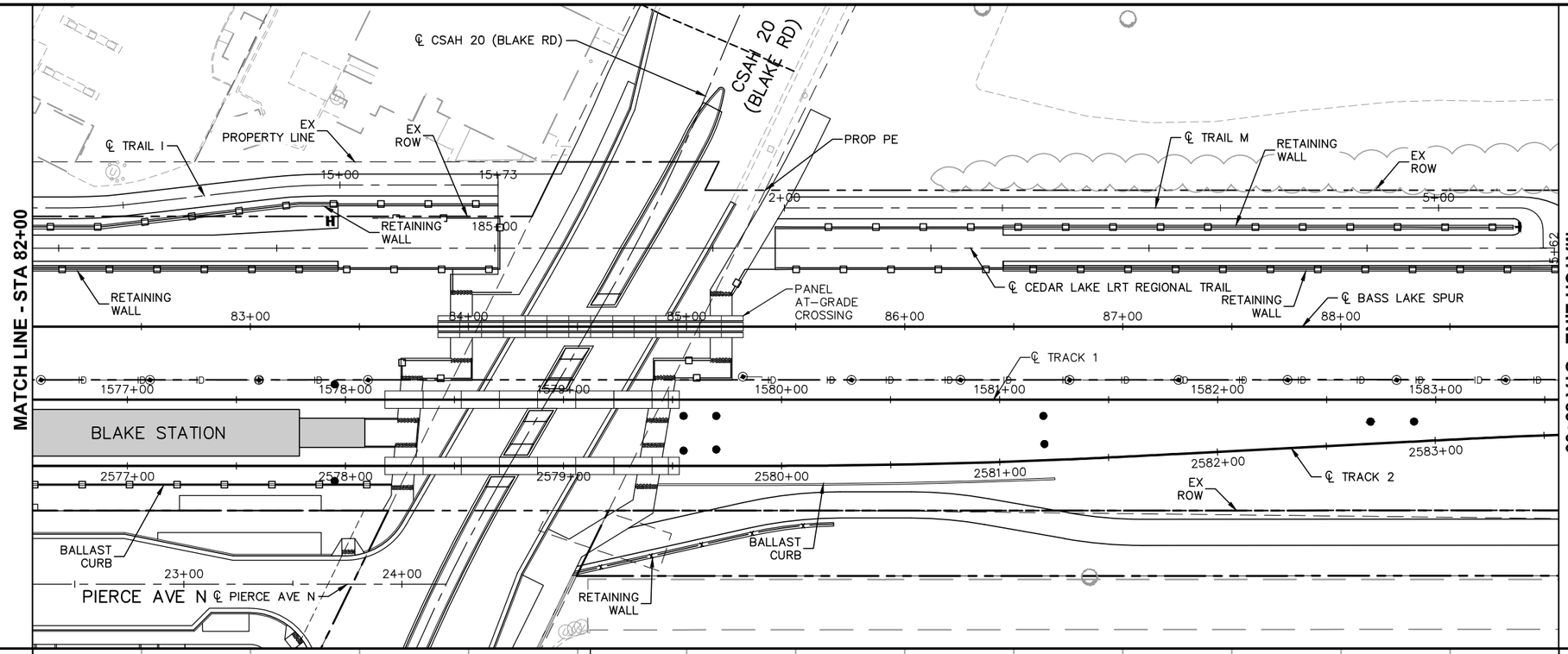

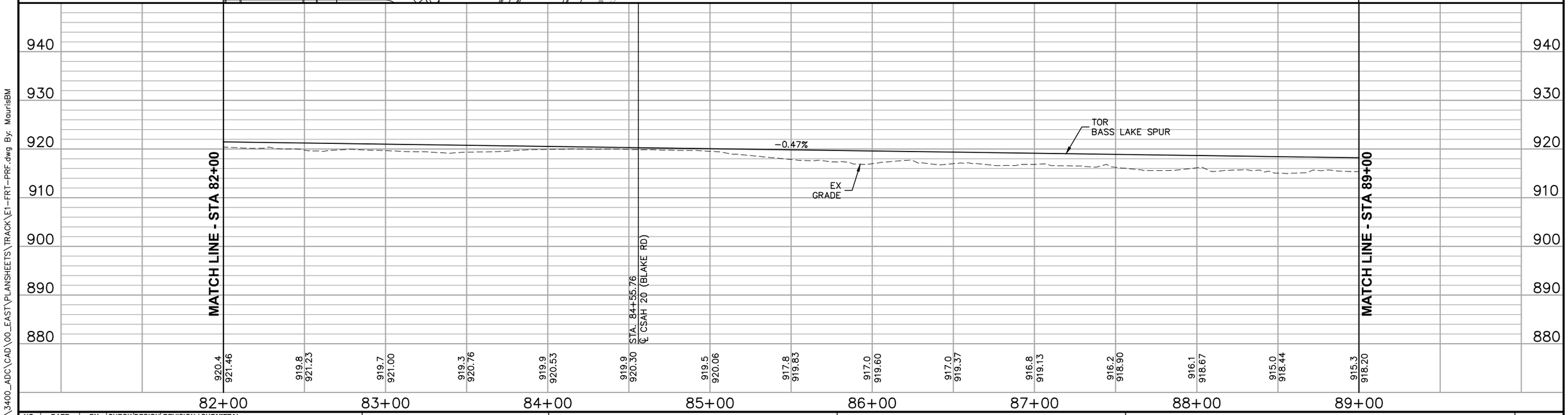

NO.	DATE	BY	CHECK	DESIGN	REVISION / SUBMITTAL

AECOM

90% SUBMISSION - 01/22/16

METROPOLITAN COUNCIL

SOUTHWEST Green Line LRT Extension

CIVIL - VOLUME 3B
FREIGHT
PLAN AND PROFILE
STA 82+00 TO STA 89+00

DISCIPLINE: TRACK

SHEET NAME: E1-FRT-PRF - 008

SHEET 347 OF 420

Jan, 18 2016 10:56 am V:\3400_ADC\CAD\00_EAST\PLANSHEETS\TRACK\E1-FRT-PRF.dwg By: MaurisBM

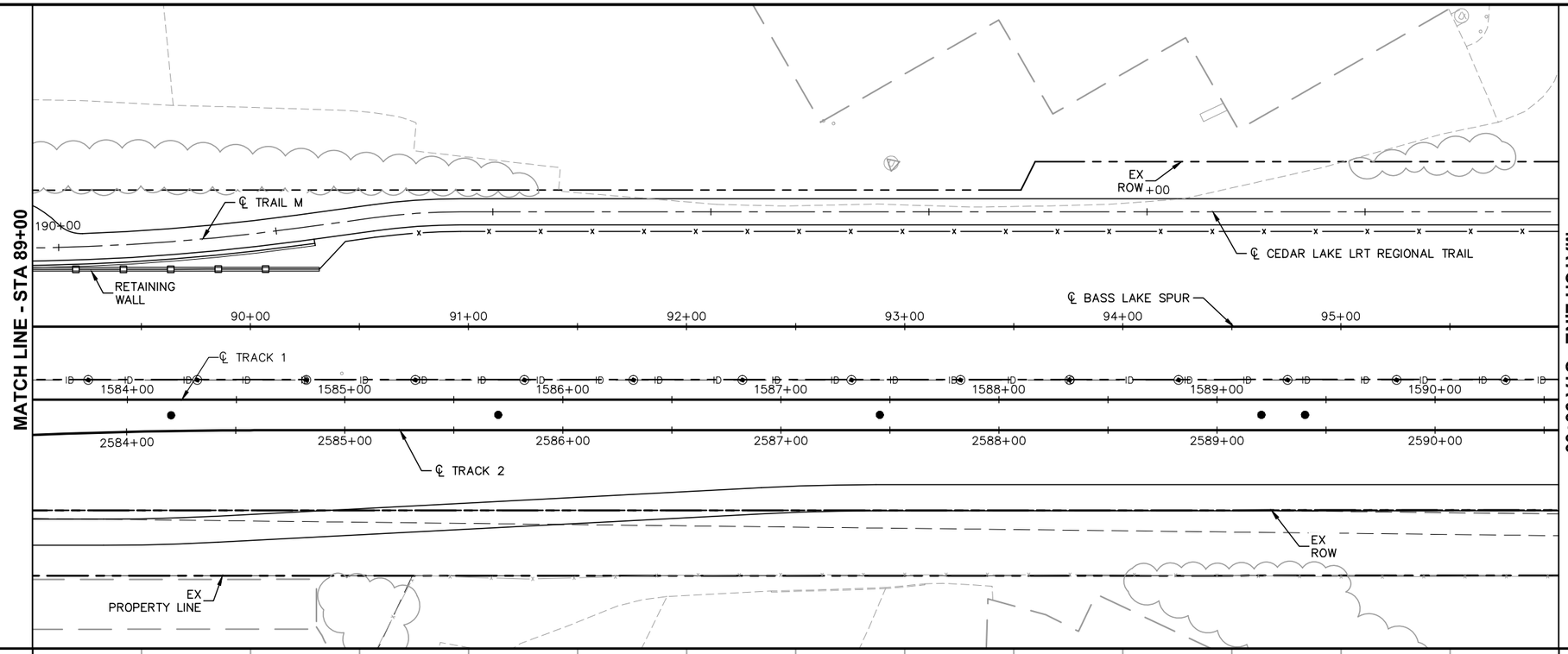

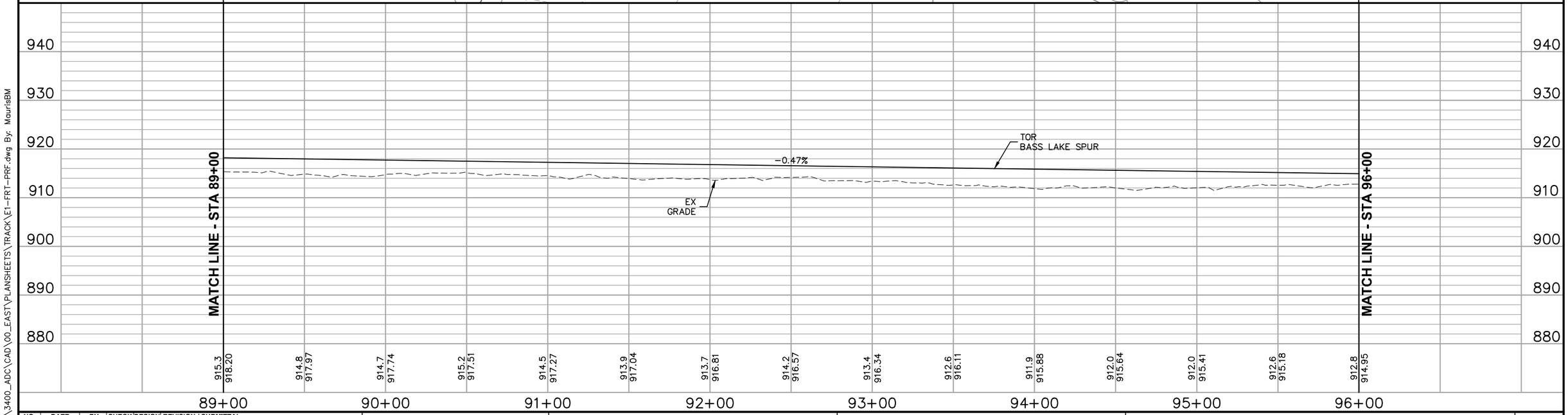

0 5 10 20
VERTICAL
0 15 30 60
HORIZONTAL
SCALE IN FEET

NO.	DATE	BY	CHECK	DESIGN	REVISION / SUBMITTAL

AECOM

90% SUBMISSION - 01/22/16

METROPOLITAN COUNCIL

SOUTHWEST Green Line LRT Extension

CIVIL - VOLUME 3B
FREIGHT
PLAN AND PROFILE
STA 89+00 TO STA 96+00

DISCIPLINE: TRACK

SHEET NAME: E1-FRT-PRF - 009

SHEET 348 OF 420

Jan, 18 2016 10:58 am V:\3400_ADC\CAD\00_EAST\PLANSHEETS\TRACK\E1-FRT-PRF.dwg By: MaurisBM

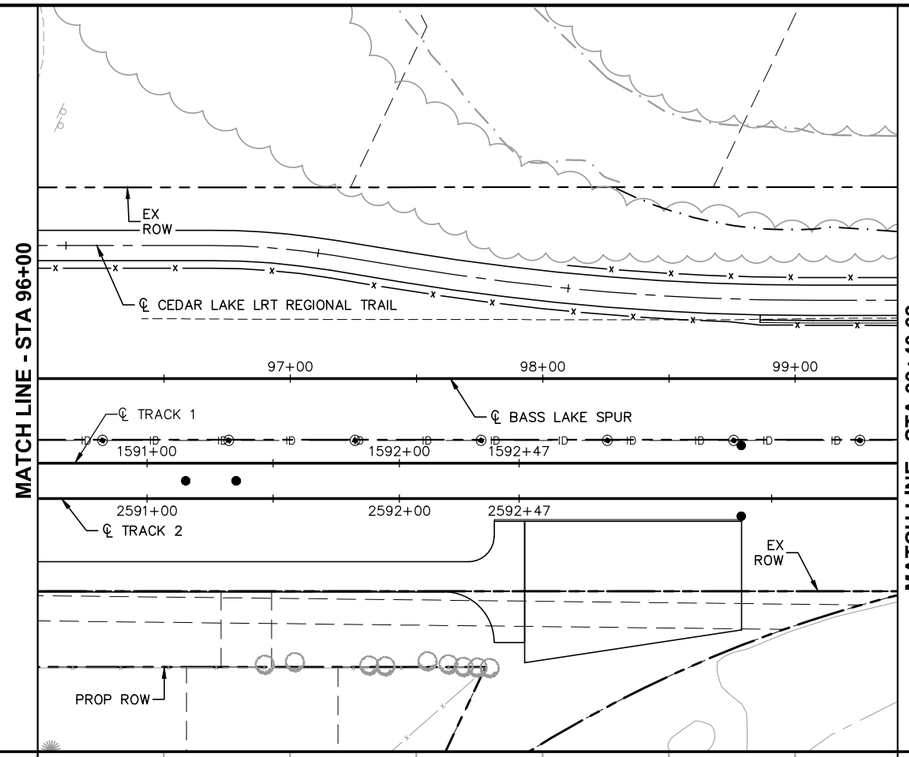

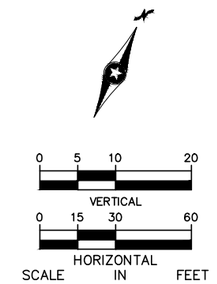

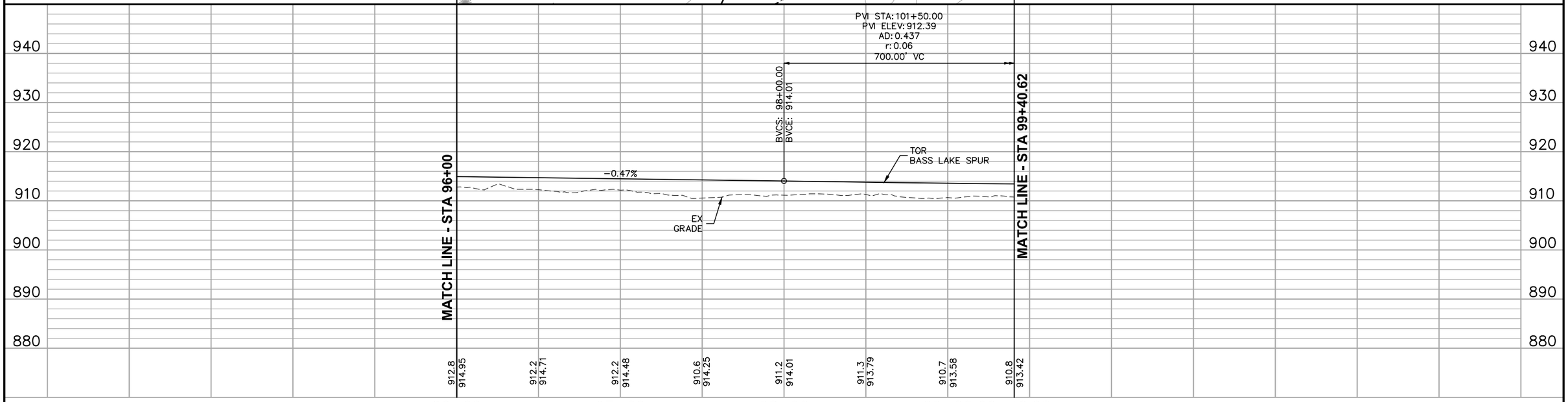

NO.	DATE	BY	CHECK	DESIGN	REVISION / SUBMITTAL

AECOM

90% SUBMISSION - 01/22/16

METROPOLITAN COUNCIL

SOUTHWEST Green Line LRT Extension

CIVIL - VOLUME 3B
FREIGHT
PLAN AND PROFILE
STA 96+00 TO STA 99+40.62

DISCIPLINE: TRACK

SHEET NAME: E1-FRT-PRF - 010

SHEET 349 OF 420

Jan, 18 2016 11:00 am V:\3400_ADC\CAD\00_EAST\PLANSHEETS\TRACK\E1-FRT-PRF.dwg By: MaurisBM

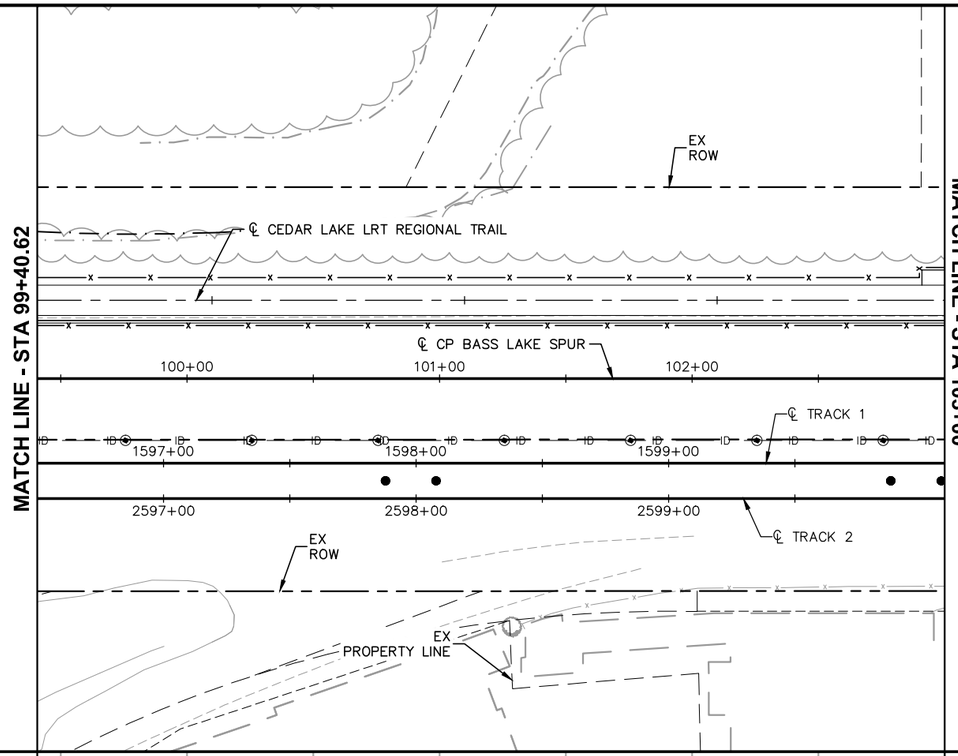

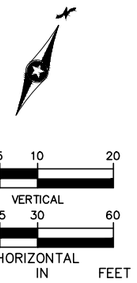

PVI STA: 101+50.00
PVI ELEV: 912.39
AD: 0.437
r: 0.06
700.00' VC

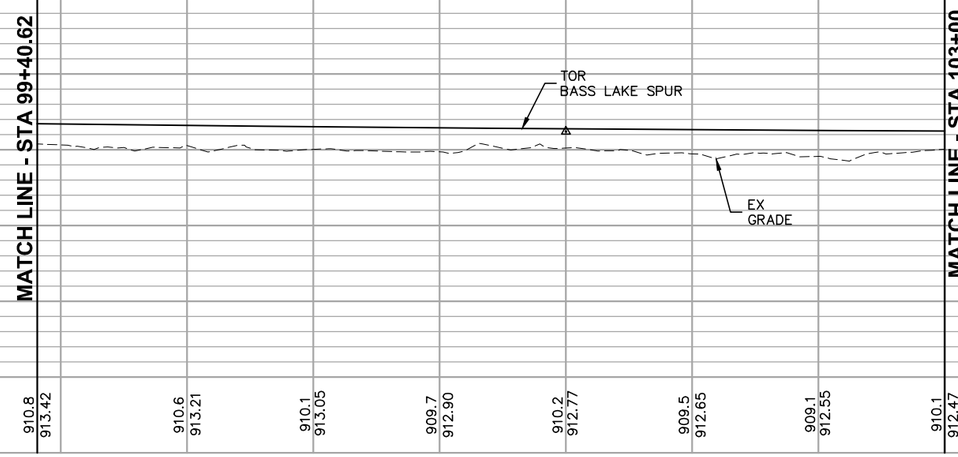

NO.	DATE	BY	CHECK	DESIGN	REVISION / SUBMITTAL

AECOM

90% SUBMISSION - 01/22/16

METROPOLITAN COUNCIL

SOUTHWEST Green Line LRT Extension

CIVIL - VOLUME 3B
FREIGHT
PLAN AND PROFILE
STA 99+40.62 TO STA 103+00

DISCIPLINE: TRACK

SHEET NAME: E2-FRT-PRF - 001

SHEET 350 OF 420

Jan, 18 2016 11:03 am V:\3400_ADC\CAD\00_EAST\PLANSHEETS\TRACK\E2-FRT-PRF.dwg By: MaurisBM

MATCH LINE - STA 103+00

MATCH LINE - STA 110+00

EX ROW

RETAINING WALL

BEGIN BRIDGE

BRIDGE

END BRIDGE

RETAINING WALL

℄ CEDAR LAKE LRT REGIONAL TRAIL

℄ CP BASS LAKE SPUR

℄ TRACK 1

℄ TRACK 2

EX ROW

RETAINING WALL

MINNEHAHA CREEK

RETAINING WALL

EX PROPERTY LINE

104+00 105+00 106+00 107+00 108+00 109+00 210+00

1601+00 1602+00 1603+00 1604+00 1605+00 1606+00

2601+00 2602+00 2603+00 2604+00 2605+00 2606+00

0 5 10 20
VERTICAL
0 15 30 60
HORIZONTAL
SCALE IN FEET

PVI STA: 101+50.00
PVI ELEV: 912.39
AD: 0.437
r: 0.06
700.00' VC

EVCS: 105+00.00
EVCE: 912.29

BEGIN BRIDGE
105+46.51
EL: 912.27

END BRIDGE
106+43.51
EL: 912.24

TOR
BASS LAKE SPUR

−0.03%

LOW CHORD
BRIDGE

EX
GRADE

910.1 912.47 | 910.2 912.40 | 909.5 912.35 | 909.7 912.31 | 909.8 912.29 | 910.0 912.27 | 892.8 912.26 | 909.6 912.24 | 908.6 912.23 | 908.7 912.21 | 909.7 912.20 | 908.9 912.19 | 909.0 912.17 | 909.8 912.16 | 909.4 912.14

940 930 920 910 900 890 880

103+00 104+00 105+00 106+00 107+00 108+00 109+00 110+00

NO.	DATE	BY	CHECK	DESIGN	REVISION / SUBMITTAL

AECOM

90% SUBMISSION - 01/22/16

METROPOLITAN COUNCIL

SOUTHWEST Green Line LRT Extension

CIVIL - VOLUME 3B
FREIGHT
PLAN AND PROFILE
STA 103+00 TO STA 110+00

DISCIPLINE: TRACK

SHEET NAME: E2-FRT-PRF - 002

SHEET 351 OF 420

Jan, 18 2016 11:04 am V:\3400_ADC\CAD\00_EAST\PLANSHEETS\TRACK\E2-FRT-PRF.dwg By: MaurisBM

MATCH LINE - STA 110+00

EX ROW

℄ TRAIL N

215+00

℄ CEDAR LAKE LRT REGIONAL TRAIL

111+00 112+00 113+00 114+00 115+00 116+00

℄ CP BASS LAKE SPUR

EX ROW

℄ TRACK 1

1608+00 1609+00 1610+00 1611+00 1612+00 1613+00

2608+00 2609+00 2610+00 2611+00 2612+00 2613+00

℄ TRACK 2

EX PROPERTY LINE

EX ROW

MATCH LINE - STA 117+00

0 5 10 20
VERTICAL
0 15 30 60
HORIZONTAL
SCALE IN FEET

940 930 920 910 900 890 880

TOR BASS LAKE SPUR

-0.03%

EX GRADE

MATCH LINE - STA 110+00

MATCH LINE - STA 117+00

909.4 912.14 | 910.4 912.13 | 911.0 912.11 | 910.7 912.10 | 910.3 912.09 | 910.9 912.07 | 911.3 912.06 | 911.6 912.04 | 911.2 912.03 | 911.4 912.01 | 911.3 912.00 | 910.7 911.99 | 911.0 911.97 | 910.9 911.96 | 911.1 911.94

110+00 111+00 112+00 113+00 114+00 115+00 116+00 117+00

NO.	DATE	BY	CHECK	DESIGN	REVISION / SUBMITTAL

AECOM

90% SUBMISSION - 01/22/16

METROPOLITAN COUNCIL

SOUTHWEST Green Line LRT Extension

CIVIL - VOLUME 3B
FREIGHT
PLAN AND PROFILE
STA 110+00 TO STA 117+00

DISCIPLINE: TRACK

SHEET NAME: E2-FRT-PRF - 003

SHEET 352 OF 420

Jan, 18 2016 11:06 am V:\3400_ADC\CAD\00_EAST\PLANSHEETS\TRACK\E2-FRT-PRF.dwg By: MaurisBM

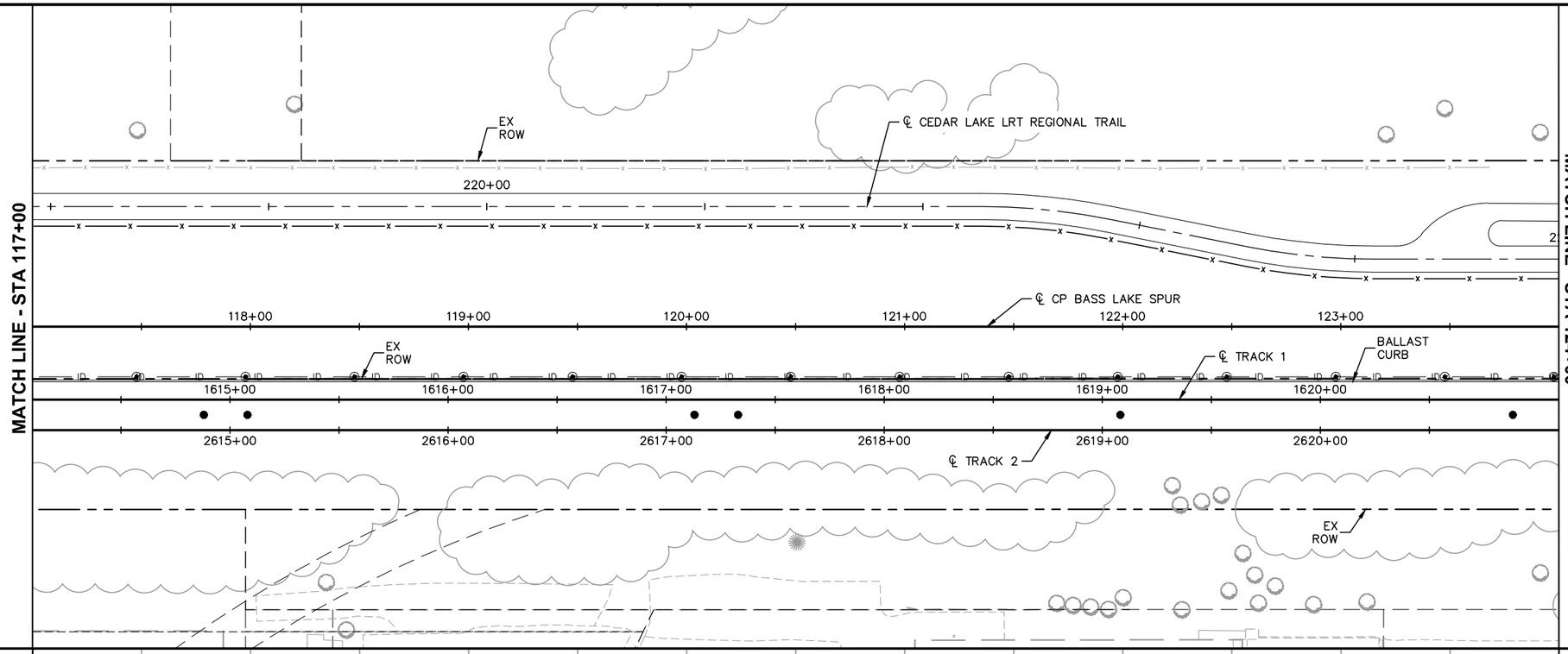

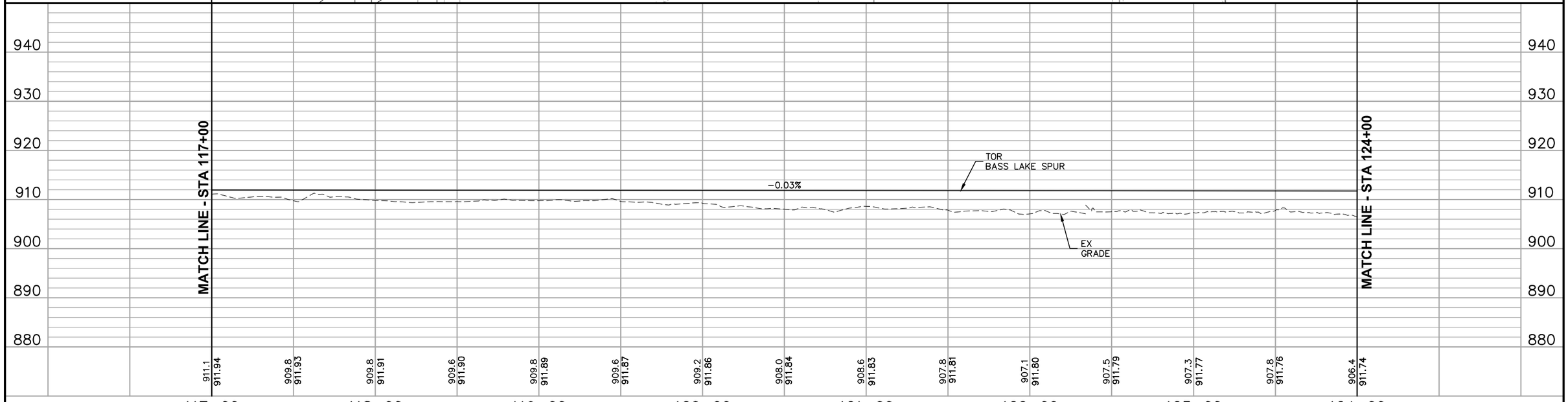

NO.	DATE	BY	CHECK	DESIGN	REVISION / SUBMITTAL

AECOM

90% SUBMISSION - 01/22/16

METROPOLITAN COUNCIL

SOUTHWEST Green Line LRT Extension

CIVIL - VOLUME 3B
FREIGHT
PLAN AND PROFILE
STA 117+00 TO STA 124+00

DISCIPLINE: TRACK

SHEET NAME: E2-FRT-PRF - 004

SHEET 353 OF 420

Jan, 18 2016 11:08 am V:\3400_ADC\CAD\00_EAST\PLANSHEETS\TRACK\E2-FRT-PRF.dwg By: MaurisBM

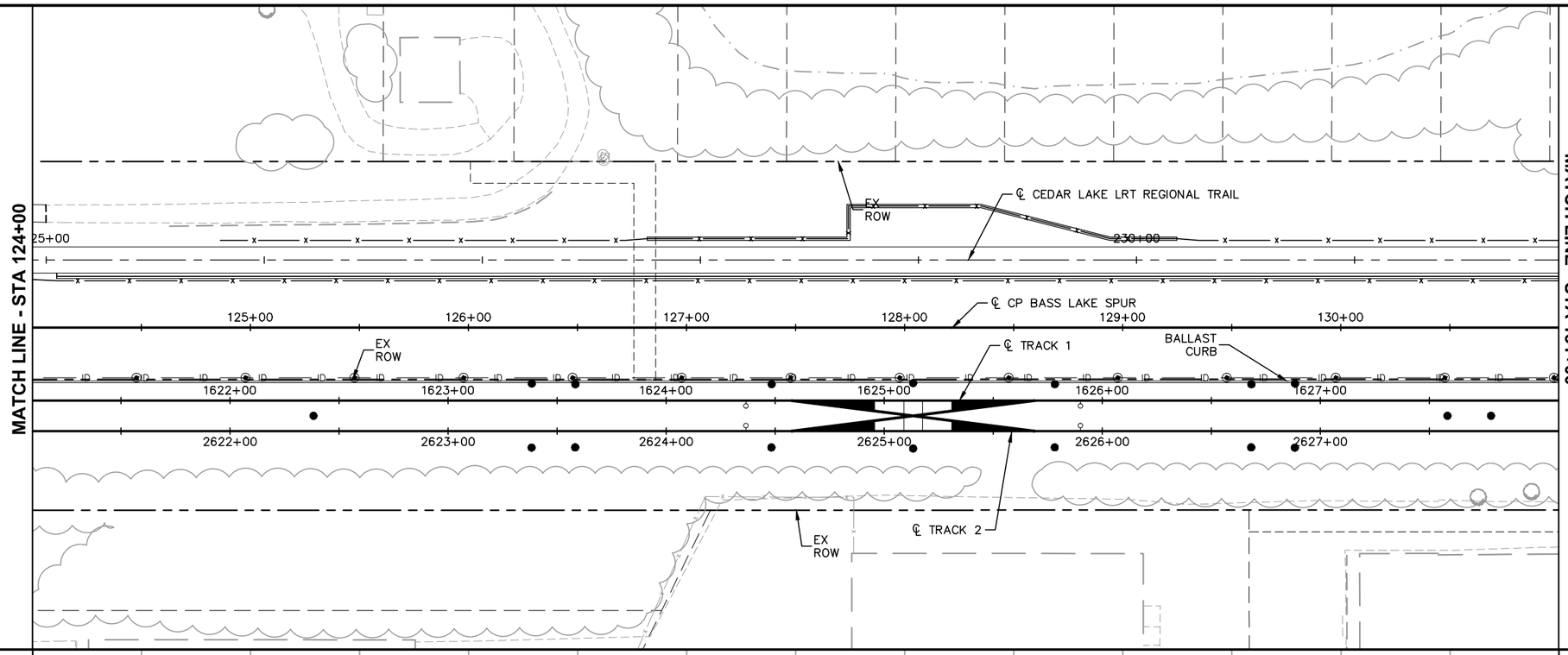

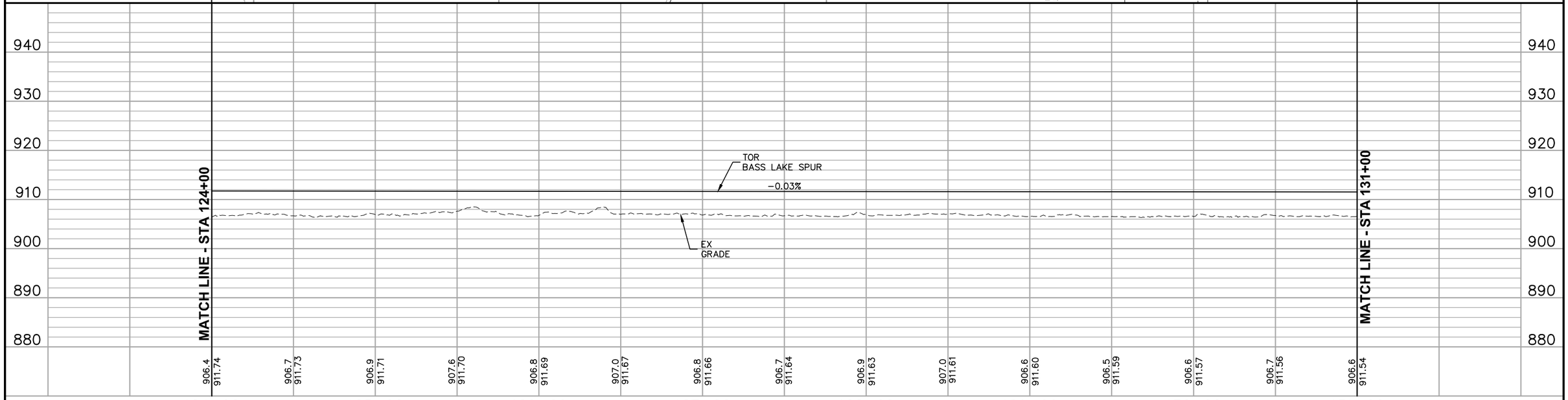

NO.	DATE	BY	CHECK	DESIGN	REVISION / SUBMITTAL

AECOM

90% SUBMISSION - 01/22/16

METROPOLITAN COUNCIL

SOUTHWEST Green Line LRT Extension

CIVIL - VOLUME 3B
FREIGHT
PLAN AND PROFILE
STA 124+00 TO STA 131+00

DISCIPLINE: TRACK

SHEET NAME: E2-FRT-PRF - 005

SHEET 354 OF 420

Jan, 18 2016 11:09 am V:\3400_ADC\CAD\00_EAST\PLANSHEETS\TRACK\E2-FRT-PRF.dwg By: MaurisBM

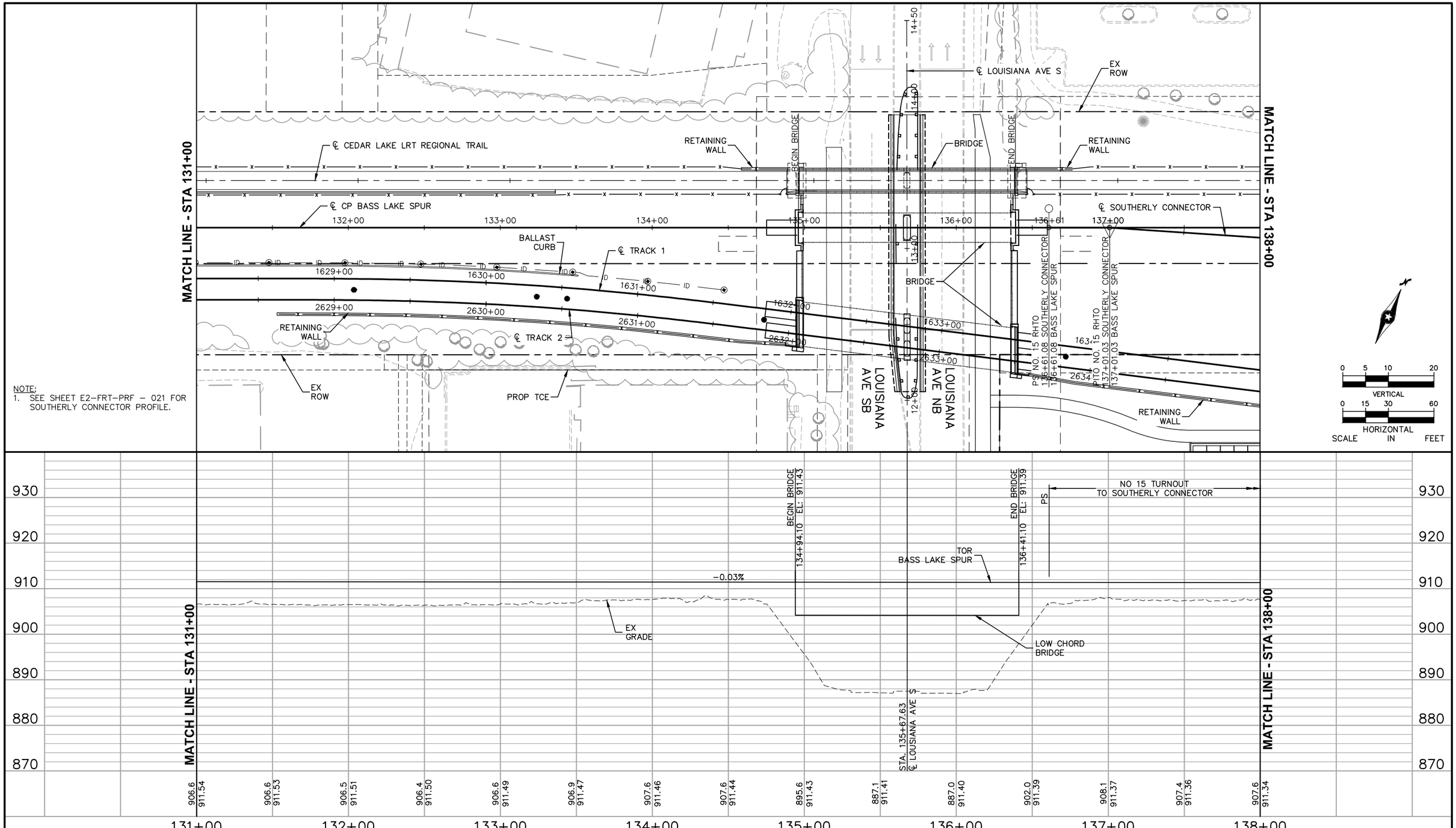

NOTE:
1. SEE SHEET E2-FRT-PRF - 021 FOR SOUTHERLY CONNECTOR PROFILE.

NO.	DATE	BY	CHECK	DESIGN	REVISION / SUBMITTAL

AECOM

90% SUBMISSION - 01/22/16

METROPOLITAN COUNCIL

SOUTHWEST Green Line LRT Extension

CIVIL - VOLUME 3B
FREIGHT
PLAN AND PROFILE
STA 131+00 TO STA 138+00

DISCIPLINE: TRACK

SHEET NAME: E2-FRT-PRF - 006

SHEET 355 OF 420

Jan, 18 2016 11:11 am V:\3400_ADC\CAD\00_EAST\PLANSHEETS\TRACK\E2-FRT-PRF.dwg By: MaurisBM

MATCH LINE - STA 138+00

MATCH LINE - STA 145+00

EX ROW

℄ CEDAR LAKE LRT REGIONAL TRAIL

240+00

245+00

11+77

RETAINING WALL

139+00 140+00 141+00 142+00 143+00 144+00

℄ CP BASS LAKE SPUR

EX ROW

℄ SOUTHERLY CONNECTOR

℄ LOUISIANA STATION UNDERPASS

PROP ROW

℄ TRACK 1

PROP ROW

RETAINING WALL

1636+00 1637+00 1638+00 1639+00 1640+00 1641+00 1642+00

℄ TRACK 2

LOUISIANA STATION

RETAINING WALL

2636+00 2637+00 2638+00 2639+00 2640+00 2641+00 2642+00

NOTE:
1. SEE SHEETS E2-FRT-PRF - 021 AND E2-FRT-PRF - 022 FOR SOUTHERLY CONNECTOR PROFILE.

0 5 10 20
VERTICAL
0 15 30 60
HORIZONTAL
SCALE IN FEET

NO 15 TURNOUT TO SOUTHERLY CONNECTOR

TOR BASS LAKE SPUR

-0.03%

EX GRADE

PEDESTRIAN TUNNEL

STA. 144+54.89 ℄ LOUISIANA STATION UNDERPASS

930 920 910 900 890 880 870

907.6 911.34 | 907.6 911.33 | 907.8 911.31 | 907.9 911.30 | 907.9 911.29 | 908.2 911.27 | 908.2 911.26 | 908.3 911.24 | 909.0 911.23 | 909.3 911.21 | 909.5 911.20 | 909.7 911.19 | 909.4 911.17 | 909.3 911.16 | 909.2 911.14

138+00 139+00 140+00 141+00 142+00 143+00 144+00 145+00

NO.	DATE	BY	CHECK	DESIGN	REVISION / SUBMITTAL

AECOM

90% SUBMISSION - 01/22/16

METROPOLITAN COUNCIL

SOUTHWEST Green Line LRT Extension

CIVIL - VOLUME 3B
FREIGHT
PLAN AND PROFILE
STA 138+00 TO STA 145+00

DISCIPLINE: TRACK

SHEET NAME: E2-FRT-PRF - 007

SHEET 356 OF 420

Jan, 18 2016 11:13 am V:\3400_ADC\CAD\00_EAST\PLANSHEETS\TRACK\E2-FRT-PRF.dwg By: MaurisBM

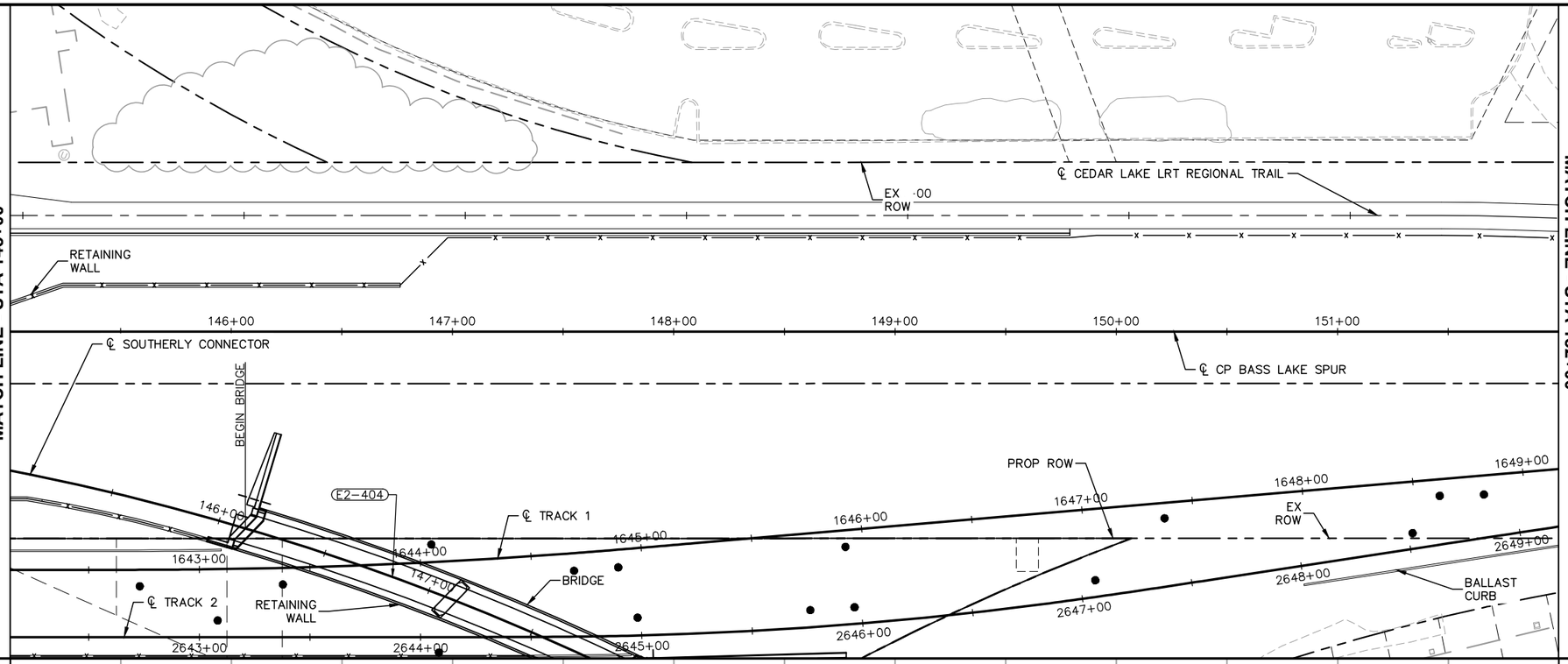

NOTE:
1. SEE SHEET E2-FRT-PRF - 022 FOR SOUTHERLY CONNECTOR PROFILE.

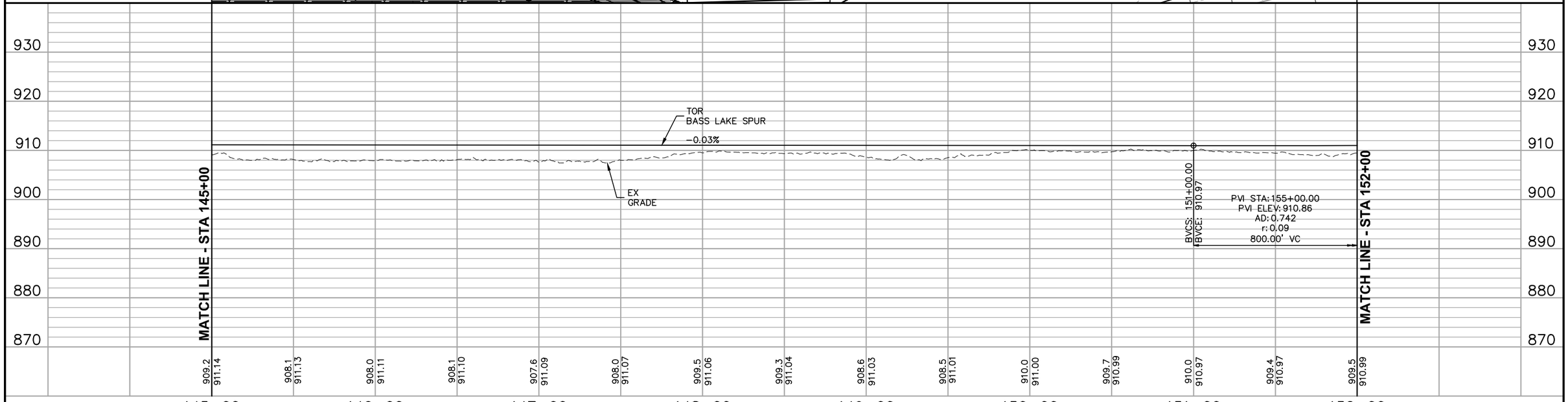

NO.	DATE	BY	CHECK	DESIGN	REVISION / SUBMITTAL

AECOM

90% SUBMISSION - 01/22/16

METROPOLITAN COUNCIL

SOUTHWEST Green Line LRT Extension

CIVIL - VOLUME 3B
FREIGHT
PLAN AND PROFILE
STA 145+00 TO STA 152+00

DISCIPLINE: TRACK

SHEET NAME: E2-FRT-PRF - 008

SHEET 357 OF 420

Jan, 18 2016 04:09 pm V:\3400_ADC\CAD\00_EAST\PLANSHEETS\TRACK\E2-FRT-PRF.dwg By: MaurisBM

MATCH LINE - STA 152+00

MATCH LINE - STA 159+00

EX ROW

255+00

℄ CEDAR LAKE LRT REGIONAL TRAIL

BRIDGE PIER PROTECTION

EX MN&S SPUR

153+00 154+00 155+00 156+00 157+00 158+00

EX ROW

℄ CP BASS LAKE SPUR

EX ROW

℄ TRACK 1

1650+00 1651+00 1652+00 1653+00 1654+00 1655+00 1656+00

2650+00 2651+00 2652+00 2653+00 2654+00 2655+00 2656+00

BALLAST CURB

℄ TRACK 2

EX BRIDGE

EX ROW

RAILROAD AVE S

EX PROPERTY LINE

0 5 10 20
VERTICAL
0 15 30 60
HORIZONTAL
SCALE IN FEET

PVI STA: 155+00.00
PVI ELEV: 910.86
AD: 0.742
r: 0.09
800.00' VC

EVCS: 159+00.00
EVCE: 913.71

940 930 920 910 900 890 880

LOW CHORD BRIDGE

TOR BASS LAKE SPUR

EX GRADE

STA. 153+44.14
℄ CP MN&S SPUR
23'-0" MIN CLEARANCE

MATCH LINE - STA 152+00

MATCH LINE - STA 159+00

909.5 910.99 | 909.3 911.03 | 910.1 911.10 | 912.7 911.19 | 910.5 911.30 | 910.6 911.44 | 910.9 911.60 | 911.2 911.78 | 911.3 911.99 | 911.9 912.22 | 911.7 912.47 | 912.2 912.75 | 913.5 913.05 | 913.1 913.37 | 913.7 913.71

152+00 153+00 154+00 155+00 156+00 157+00 158+00 159+00

NO.	DATE	BY	CHECK	DESIGN	REVISION / SUBMITTAL

AECOM

90% SUBMISSION - 01/22/16

METROPOLITAN COUNCIL

SOUTHWEST Green Line LRT Extension

CIVIL - VOLUME 3B
FREIGHT
PLAN AND PROFILE
STA 152+00 TO STA 159+00

DISCIPLINE: TRACK

SHEET NAME: E2-FRT-PRF - 009

SHEET 358 OF 420

Jan, 18 2016 11:16 am V:\3400_ADC\CAD\00_EAST\PLANSHEETS\TRACK\E2-FRT-PRF.dwg By: MaurisBM

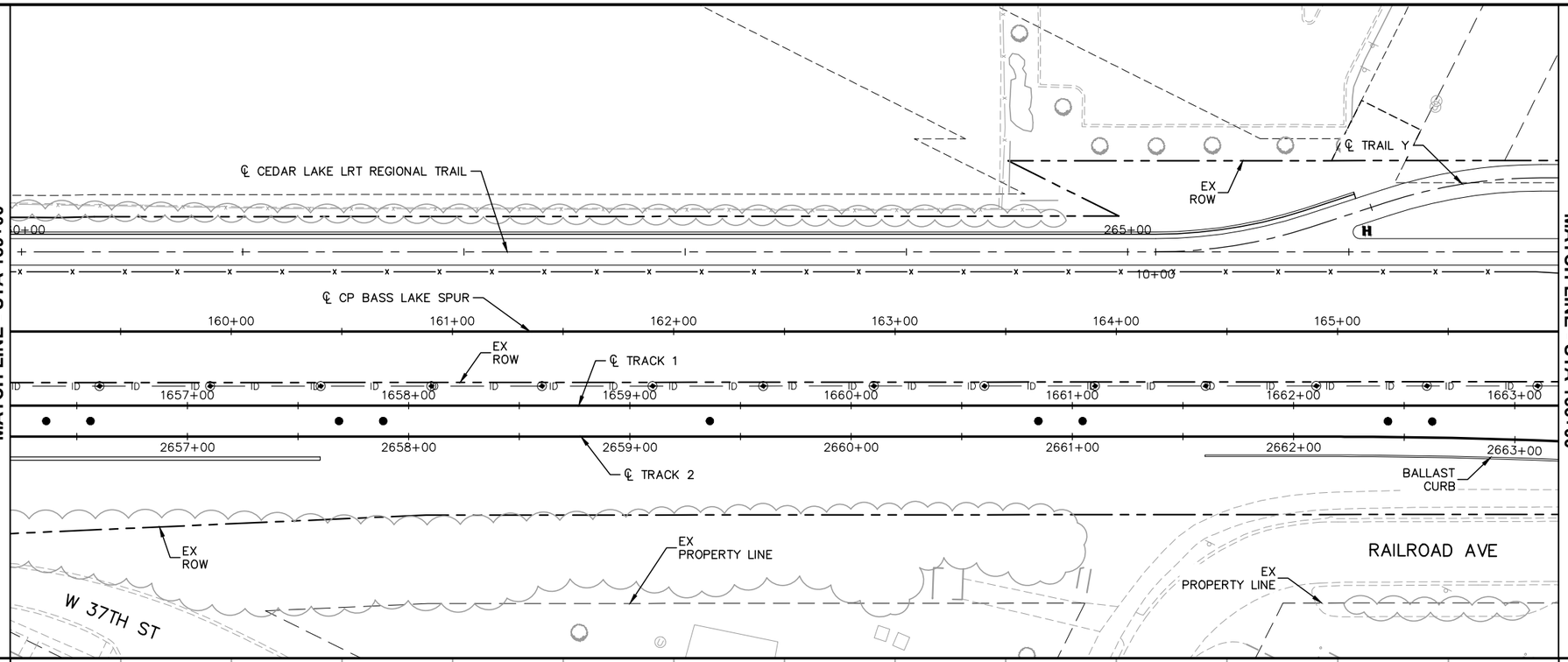

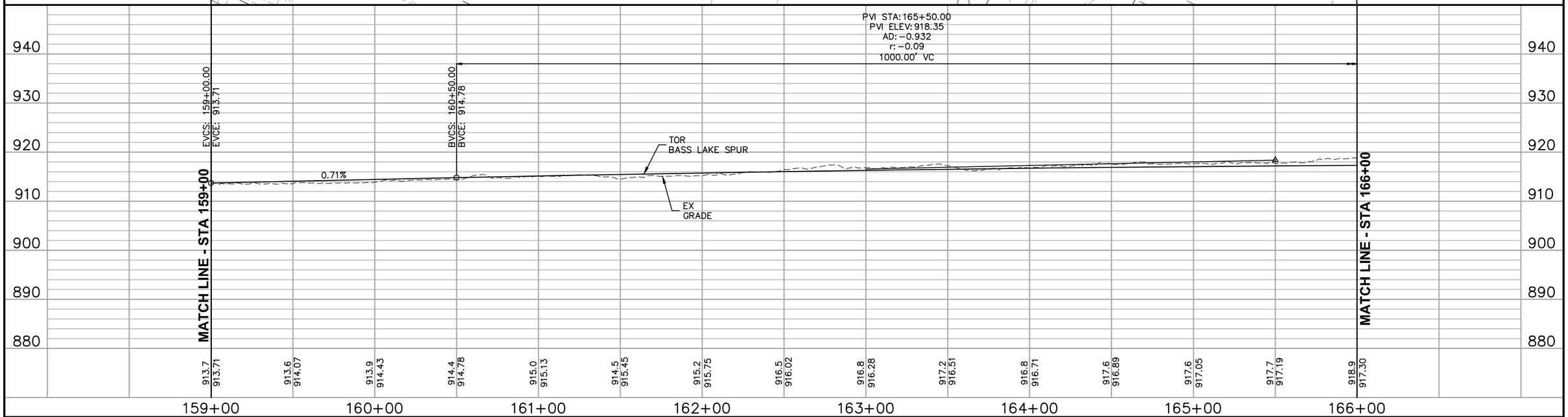

NO.	DATE	BY	CHECK	DESIGN	REVISION / SUBMITTAL

AECOM

90% SUBMISSION - 01/22/16

METROPOLITAN COUNCIL

SOUTHWEST Green Line LRT Extension

CIVIL - VOLUME 3B
FREIGHT
PLAN AND PROFILE
STA 159+00 TO STA 166+00

DISCIPLINE: TRACK

SHEET NAME: E2-FRT-PRF - 010

SHEET 359 OF 420

Jan, 18 2016 11:17 am V:\3400_ADC\CAD\00_EAST\PLANSHEETS\TRACK\E2-FRT-PRF.dwg By: MaurisBM

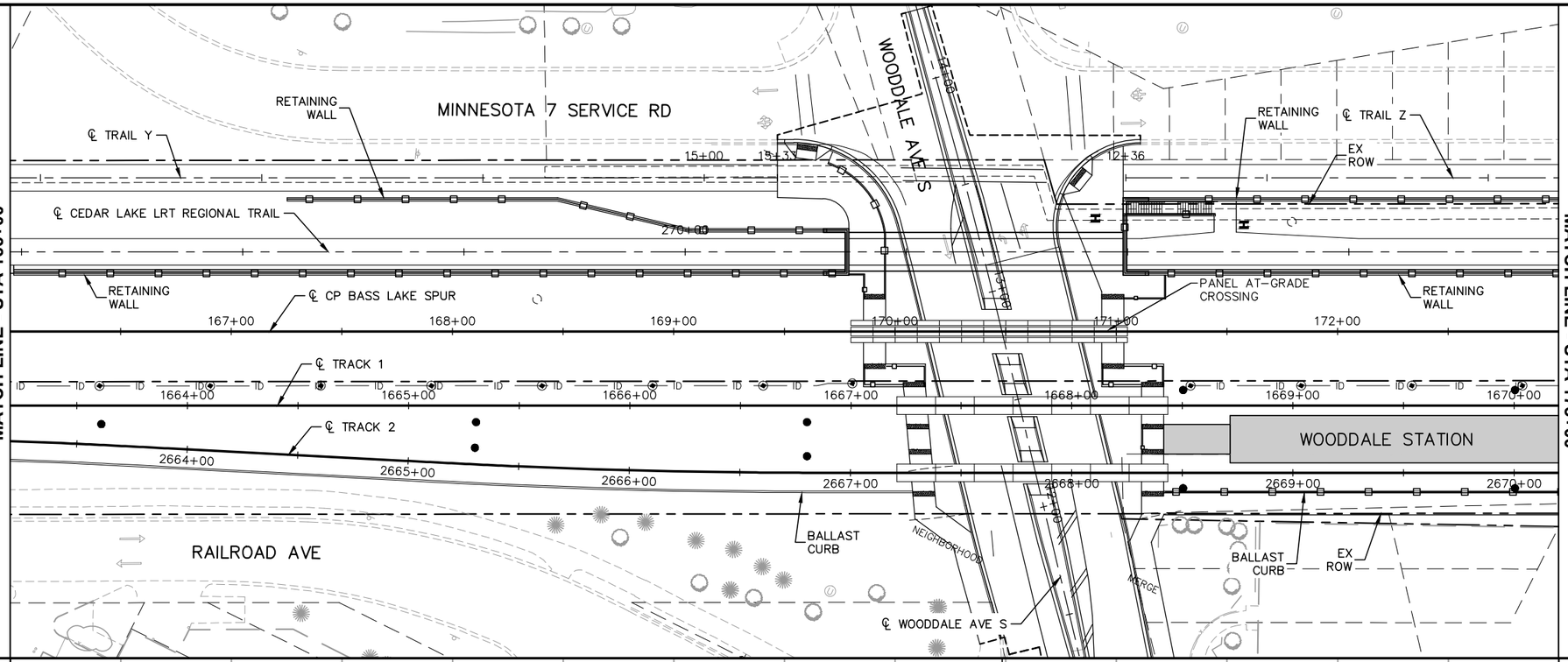

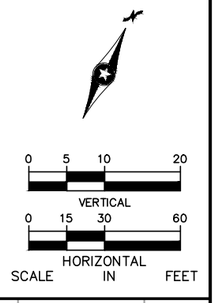

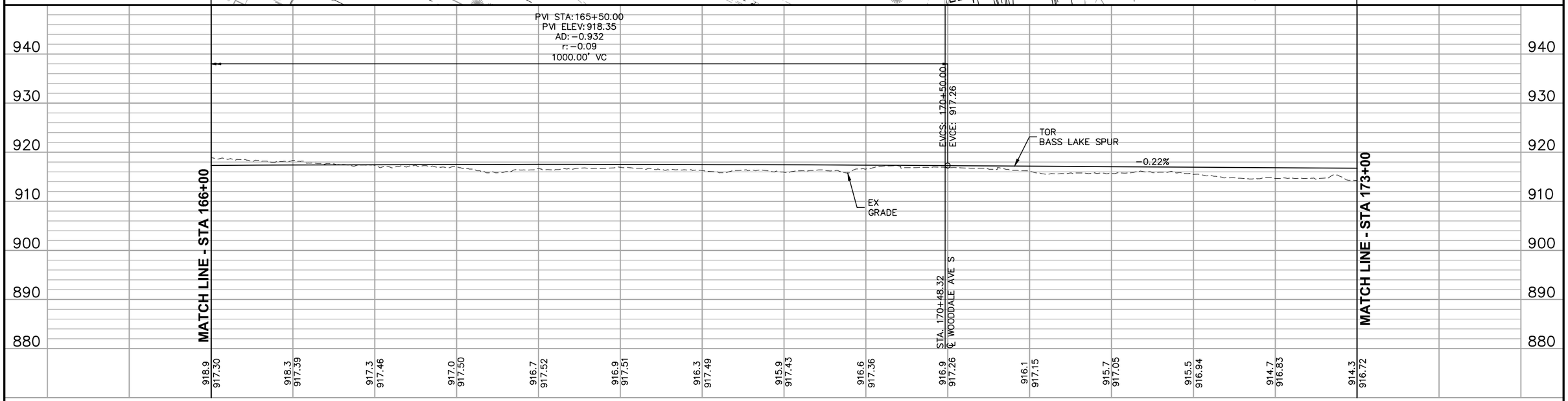

NO.	DATE	BY	CHECK	DESIGN	REVISION / SUBMITTAL

AECOM

90% SUBMISSION - 01/22/16

METROPOLITAN COUNCIL

SOUTHWEST Green Line LRT Extension

CIVIL - VOLUME 3B
FREIGHT
PLAN AND PROFILE
STA 166+00 TO STA 173+00

DISCIPLINE: TRACK

SHEET NAME: E2-FRT-PRF - 011

SHEET 360 OF 420

Jan, 18 2016 11:19 am V:\3400_ADC\CAD\00_EAST\PLANSHEETS\TRACK\E2-FRT-PRF.dwg By: MaurisBM

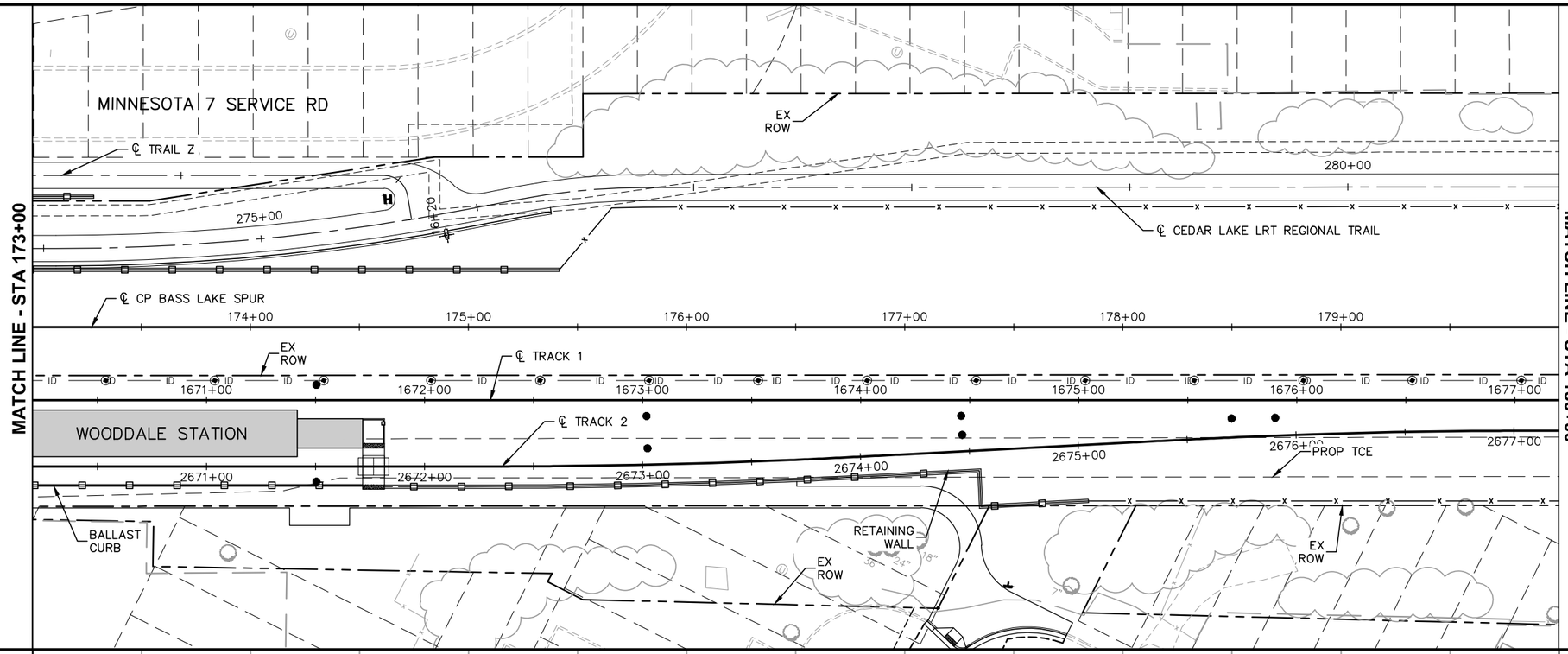

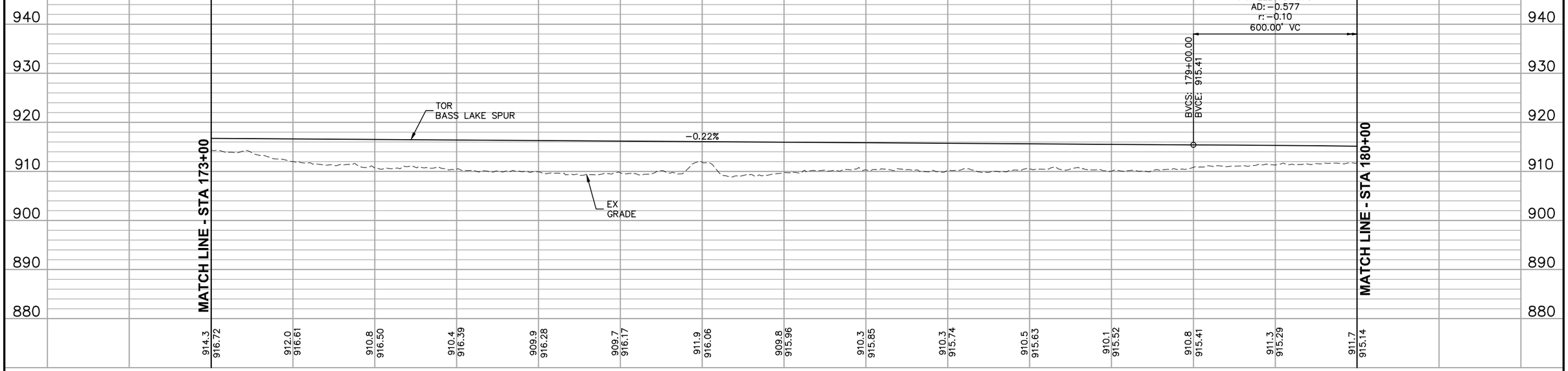

NO.	DATE	BY	CHECK	DESIGN	REVISION / SUBMITTAL

AECOM

90% SUBMISSION - 01/22/16

METROPOLITAN COUNCIL

SOUTHWEST Green Line LRT Extension

CIVIL - VOLUME 3B
FREIGHT
PLAN AND PROFILE
STA 173+00 TO STA 180+00

DISCIPLINE: TRACK

SHEET NAME: E2-FRT-PRF - 012

SHEET 361 OF 420

Jan, 18 2016 11:21 am V:\3400_ADC\CAD\00_EAST\PLANSHEETS\TRACK\E2-FRT-PRF.dwg By: MaurisBM

MATCH LINE - STA 180+00

MATCH LINE - STA 187+00

EX ROW

285+00

℄ CEDAR LAKE LRT REGIONAL TRAIL

℄ CP BASS LAKE SPUR

181+00 182+00 183+00 184+00 185+00 186+00

℄ TRACK 1

EX ROW

1678+00 1679+00 1680+00 1681+00 1682+00 1683+00 1684+00

2678+00 2679+00 2680+00 2681+00 2682+00 2683+00 2684+00

℄ TRACK 2

PROP TCE

XENWOOD AVE S

PROP TCE

0 5 10 20
VERTICAL
0 15 30 60
HORIZONTAL
SCALE IN FEET

PVI STA: 182+00.00
PVI ELEV: 914.76
AD: −0.577
r: −0.10
600.00' VC

EVCS: 185+00.00
EVCE: 912.37

TOR BASS LAKE SPUR

−0.80%

EX GRADE

940 930 920 910 900 890 880

911.7 915.14 | 911.5 914.98 | 912.5 914.78 | 913.1 914.57 | 912.5 914.32 | 913.5 914.06 | 913.5 913.77 | 912.7 913.46 | 911.3 913.12 | 911.0 912.76 | 910.5 912.37 | 911.3 911.97 | 911.5 911.58 | 908.3 911.18 | 908.8 910.78

180+00 181+00 182+00 183+00 184+00 185+00 186+00 187+00

NO.	DATE	BY	CHECK	DESIGN	REVISION / SUBMITTAL

AECOM

90% SUBMISSION - 01/22/16

METROPOLITAN COUNCIL

SOUTHWEST Green Line LRT Extension

CIVIL - VOLUME 3B
FREIGHT
PLAN AND PROFILE
STA 180+00 TO STA 187+00

DISCIPLINE: TRACK

SHEET NAME: E2-FRT-PRF - 013

SHEET 362 OF 420

Jan, 18 2016 11:22 am V:\3400_ADC\CAD\00_EAST\PLANSHEETS\TRACK\E2-FRT-PRF.dwg By: MaurisBM

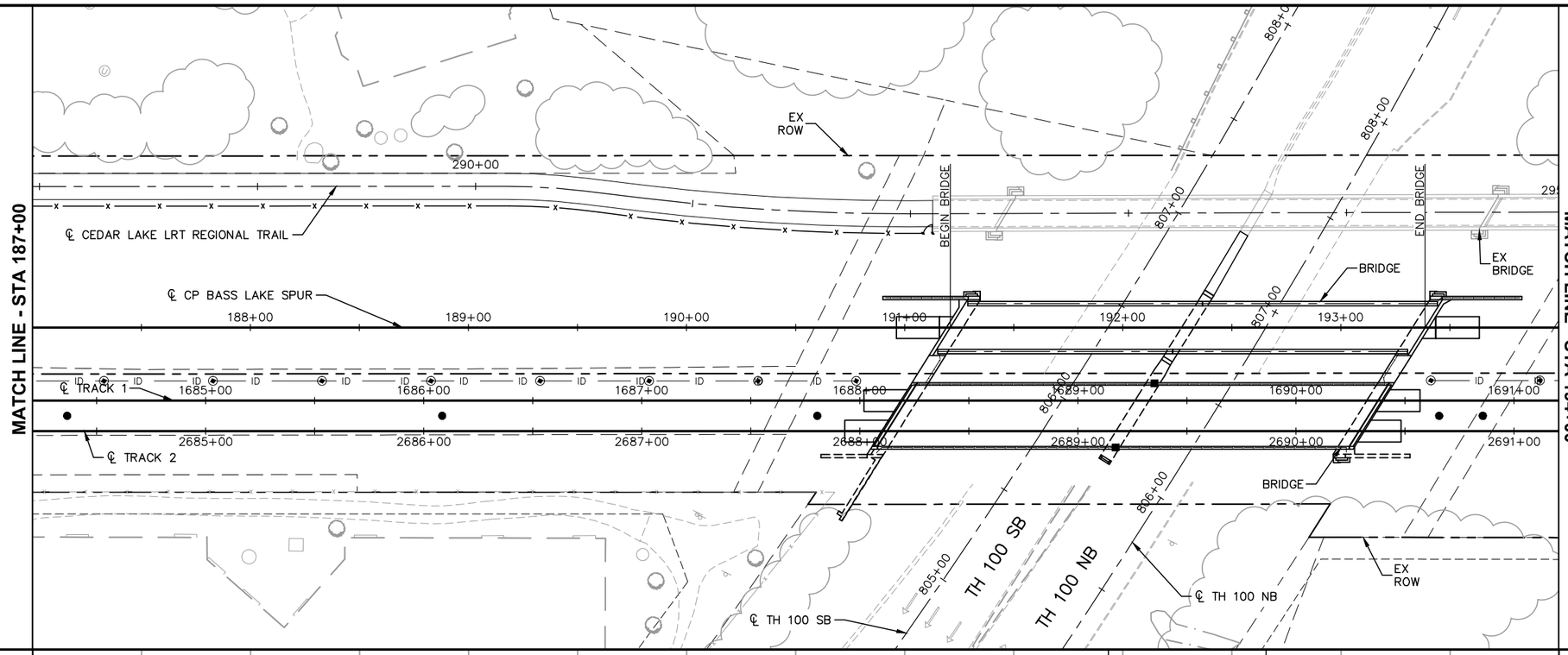

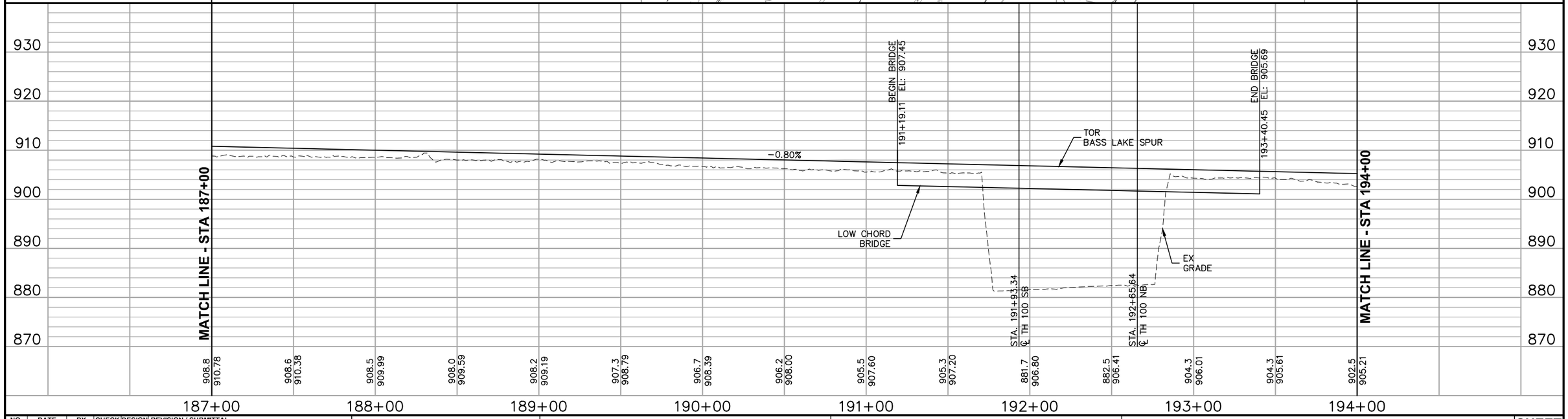

NO.	DATE	BY	CHECK	DESIGN	REVISION / SUBMITTAL

AECOM

90% SUBMISSION - 01/22/16

METROPOLITAN COUNCIL

SOUTHWEST Green Line LRT Extension

CIVIL - VOLUME 3B
FREIGHT
PLAN AND PROFILE
STA 187+00 TO STA 194+00

DISCIPLINE: TRACK

SHEET NAME: E2-FRT-PRF - 014

SHEET 363 OF 420

Jan, 18 2016 11:24 am V:\3400_ADC\CAD\00_EAST\PLANSHEETS\TRACK\E2-FRT-PRF.dwg By: MaurisBM

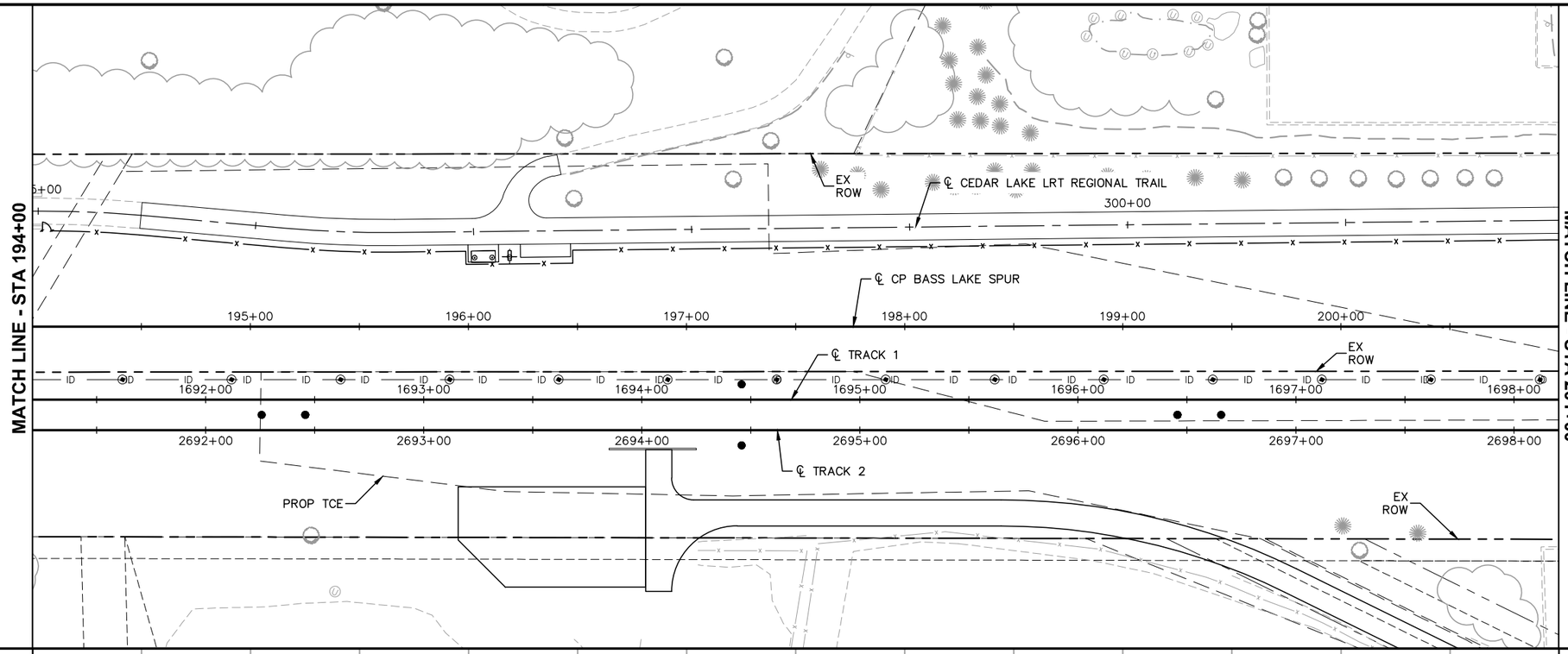

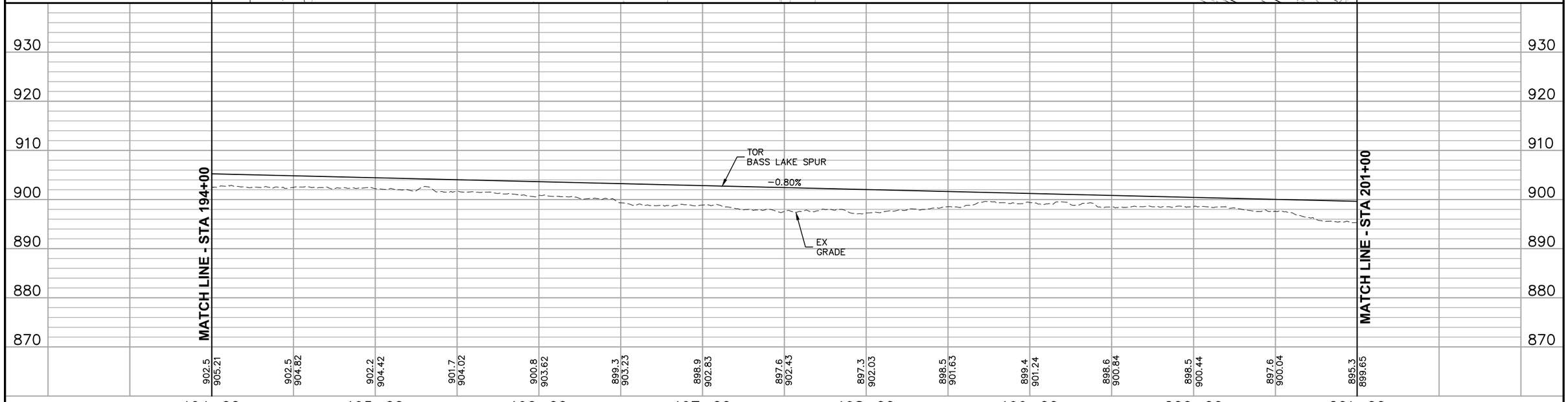

NO.	DATE	BY	CHECK	DESIGN	REVISION / SUBMITTAL

AECOM

90% SUBMISSION - 01/22/16

METROPOLITAN COUNCIL

SOUTHWEST Green Line LRT Extension

CIVIL - VOLUME 3B
FREIGHT
PLAN AND PROFILE
STA 194+00 TO STA 201+00

DISCIPLINE: TRACK

SHEET NAME: E2-FRT-PRF - 015

SHEET 364 OF 420

Jan, 18 2016 11:26 am V:\3400_ADC\CAD\00_EAST\PLANSHEETS\TRACK\E2-FRT-PRF.dwg By: MaurisBM

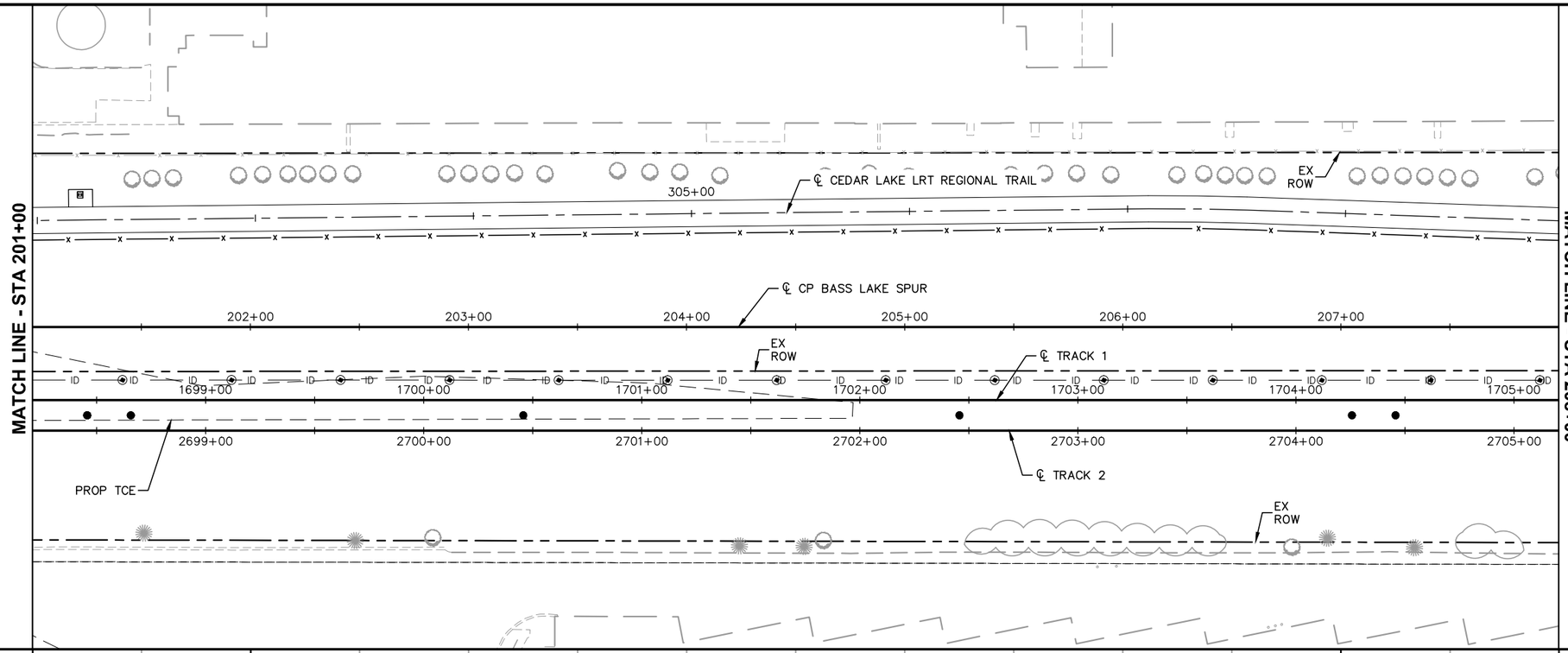

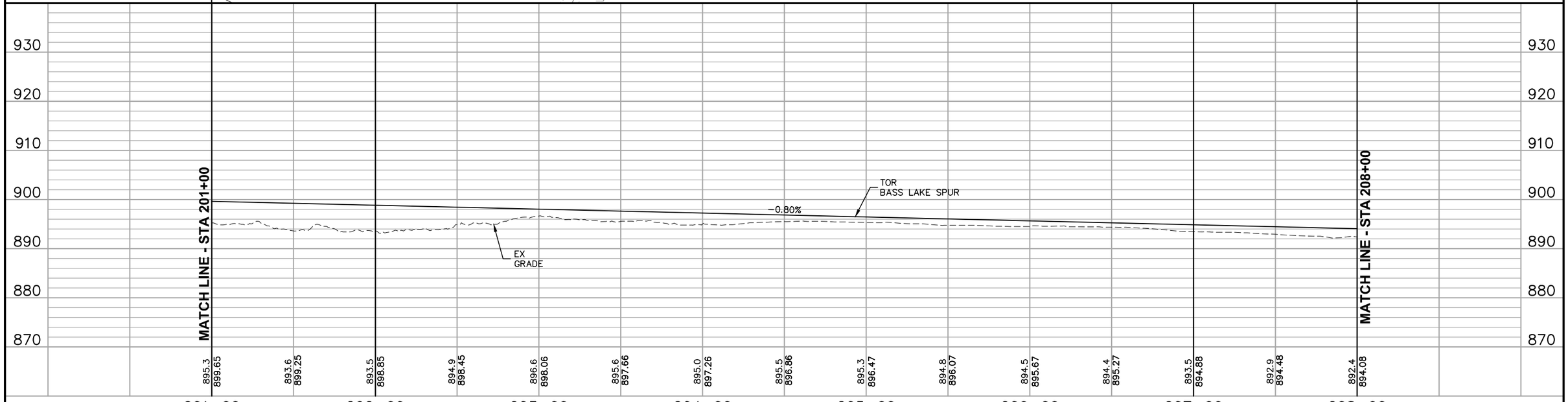

NO.	DATE	BY	CHECK	DESIGN	REVISION / SUBMITTAL

AECOM

90% SUBMISSION - 01/22/16

METROPOLITAN COUNCIL

SOUTHWEST Green Line LRT Extension

CIVIL - VOLUME 3B
FREIGHT
PLAN AND PROFILE
STA 201+00 TO STA 208+00

DISCIPLINE: TRACK

SHEET NAME: E2-FRT-PRF - 016

SHEET 365 OF 420

Jan, 18 2016 11:27 am V:\3400_ADC\CAD\00_EAST\PLANSHEETS\TRACK\E2-FRT-PRF.dwg By: MaurisBM

MATCH LINE - STA 208+00

℄ TRAIL S

RETAINING WALL

EX ROW

310+00

℄ CEDAR LAKE LRT REGIONAL TRAIL

RETAINING WALL

℄ CP BASS LAKE SPUR

209+00 210+00 211+00 212+00 213+00 214+00

BELTLINE BLVD

15+05

215+00

℄ TRACK 1

1706+00 1707+00 1708+00 1709+00 1710+00 1711+00 1712+00

2706+00 2707+00 2708+00 2709+00 2710+00 2711+00 2712+00

℄ TRACK 2

EX ROW

℄ BELTLINE BLVD

EX PROPERTY LINE

MATCH LINE - STA 215+00

0 5 10 20
VERTICAL
0 15 30 60
HORIZONTAL
SCALE IN FEET

PVI STA: 218+00.00
PVI ELEV: 886.13
AD: 1.247
r: 0.16
800.00' VC

BVCS: 214+00.00
BVCE: 889.31

TOR BASS LAKE SPUR

-0.80%

EX GRADE

STA. 214+70.05
℄ BELTLINE BLVD

MATCH LINE - STA 208+00

MATCH LINE - STA 215+00

920 910 900 890 880 870 860

892.4 894.08 | 893.0 893.68 | 891.5 893.28 | 891.5 892.89 | 890.8 892.49 | 890.3 892.09 | 890.3 891.69 | 890.2 891.30 | 889.7 890.90 | 889.7 890.50 | 889.6 890.10 | 889.3 889.71 | 888.5 889.31 | 888.7 888.93 | 888.2 888.59

208+00 209+00 210+00 211+00 212+00 213+00 214+00 215+00

NO.	DATE	BY	CHECK	DESIGN	REVISION / SUBMITTAL

AECOM

90% SUBMISSION - 01/22/16

METROPOLITAN COUNCIL

SOUTHWEST Green Line LRT Extension

CIVIL - VOLUME 3B
FREIGHT
PLAN AND PROFILE
STA 208+00 TO STA 215+00

DISCIPLINE: TRACK

SHEET NAME: E2-FRT-PRF - 017

SHEET 366 OF 420

Jan, 18 2016 11:29 am V:\3400_ADC\CAD\00_EAST\PLANSHEETS\TRACK\E2-FRT-PRF.dwg By: MaurisBM

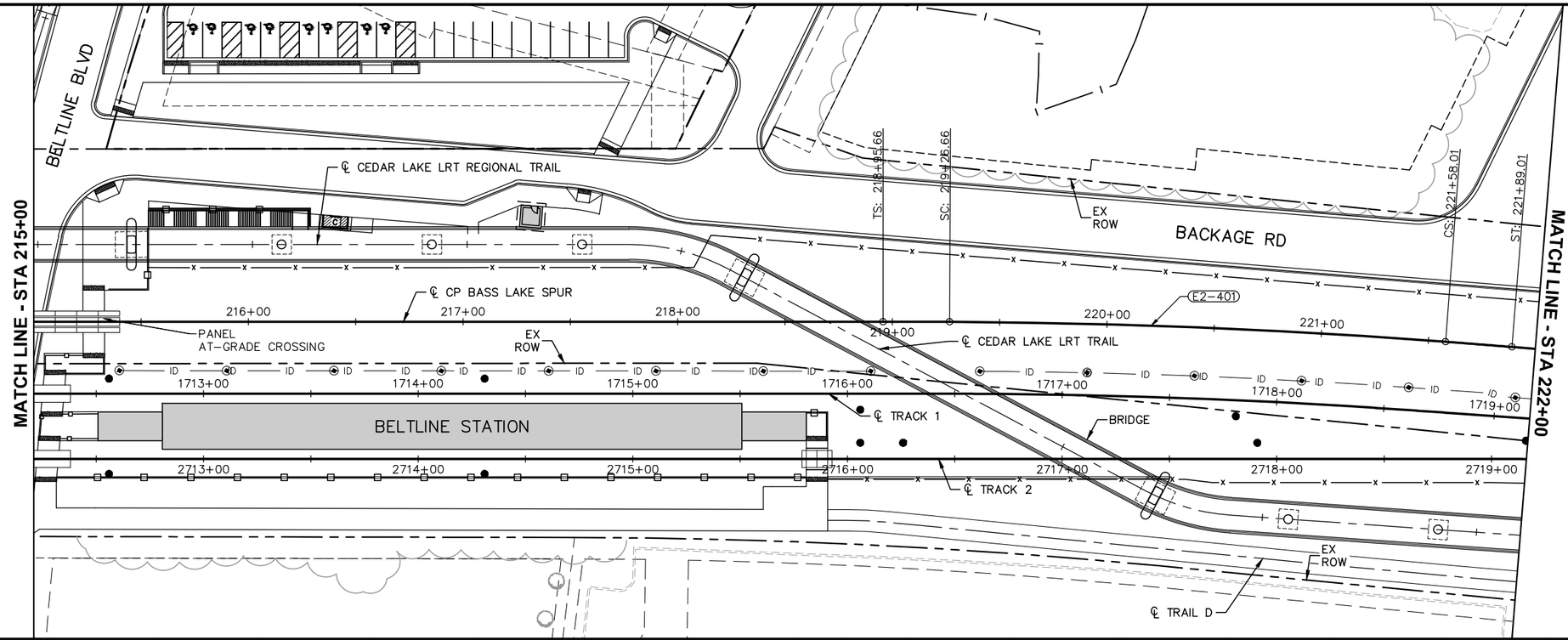

CURVE E2-401
Dc = 1° 45' 00" RH
R = 3,274.17'
Lc = 231.35'
Ls = 31.00'
Ea = 0.50"
Eu = 0.27"
V = 25 MPH

0 5 10 20
VERTICAL
0 15 30 60
HORIZONTAL
SCALE IN FEET

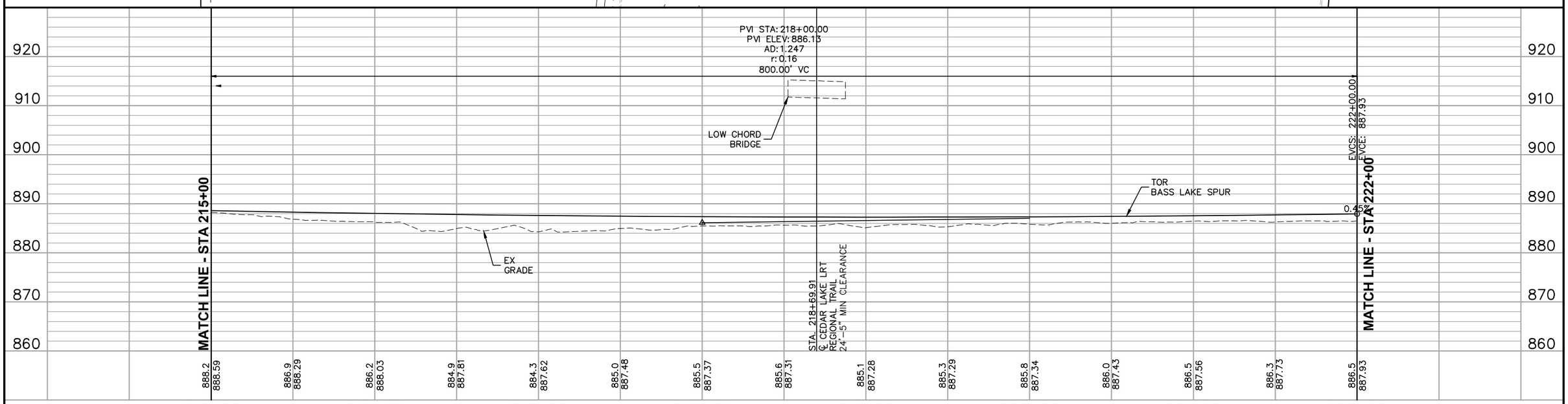

NO.	DATE	BY	CHECK	DESIGN	REVISION / SUBMITTAL

AECOM

90% SUBMISSION - 01/22/16

METROPOLITAN COUNCIL

SOUTHWEST Green Line LRT Extension

CIVIL - VOLUME 3B
FREIGHT
PLAN AND PROFILE
STA 215+00 TO STA 222+00

DISCIPLINE: TRACK

SHEET NAME: E2-FRT-PRF - 018

SHEET 367 OF 420

Jan, 18 2016 11:31 am V:\3400_ADC\CAD\00_EAST\PLANSHEETS\TRACK\E2-FRT-PRF.dwg By: MaurisBM

CURVE NO. E2–402
Dc = 1° 30' 00" RH
R = 3,819.82'
Lc = 167.22'
Ls = 31.00'
Ea = 0.50"
Eu = 0.16"
V = 25 MPH

MATCH LINE - STA 222+00

MATCH LINE - STA 229+00

EX ROW

BACKAGE RD

LYNN AVE

TS: 227+22.24

SC: 227+53.24

E2–402

℄ CP BASS LAKE SPUR

℄ TRACK 1

℄ TRACK 2

BALLAST CURB

EX ROW

BRIDGE

℄ CEDAR LAKE LRT REGIONAL TRAIL

℄ TRAIL D

223+00 224+00 225+00 226+00 227+00 228+00

1720+00 1721+00 1722+00 1723+00 1724+00 1725+00 1726+00

2720+00 2721+00 2722+00 2723+00 2724+00 2725+00 2726+00

325+00

330+00

0 5 10 20
VERTICAL
0 15 30 60
HORIZONTAL
SCALE IN FEET

PVI STA: 230+00.00
PVI ELEV: 891.55
AD: –1.052
r: –0.18
600.00' VC

BVCS: 227+00.00
BVCE: 890.19

TOR BASS LAKE SPUR

0.45%

EX GRADE

MATCH LINE - STA 222+00

MATCH LINE - STA 229+00

920 910 900 890 880 870 860

886.5 887.93 | 886.4 888.16 | 886.7 888.39 | 886.5 888.61 | 886.7 888.84 | 886.7 889.06 | 887.0 889.29 | 886.7 889.52 | 886.5 889.74 | 887.1 889.97 | 887.3 890.19 | 887.5 890.40 | 887.5 890.56 | 887.9 890.67 | 888.3 890.75

222+00 223+00 224+00 225+00 226+00 227+00 228+00 229+00

NO.	DATE	BY	CHECK	DESIGN	REVISION / SUBMITTAL

AECOM

90% SUBMISSION - 01/22/16

METROPOLITAN COUNCIL

SOUTHWEST Green Line LRT Extension

CIVIL - VOLUME 3B
FREIGHT
PLAN AND PROFILE
STA 222+00 TO STA 229+00

DISCIPLINE: TRACK

SHEET NAME: E2-FRT-PRF - 019

SHEET 368 OF 420

Jan, 18 2016 11:32 am V:\3400_ADC\CAD\00_EAST\PLANSHEETS\TRACK\E2-FRT-PRF.dwg By: MaurisBM

CURVE E2–403
Dc = 4° 20' 00" RH
R = 1,322.53'
Lc = 106.88'
Ls = 93.00'
Ea = 0.50"
Eu = 0.71"
V = 20 MPH

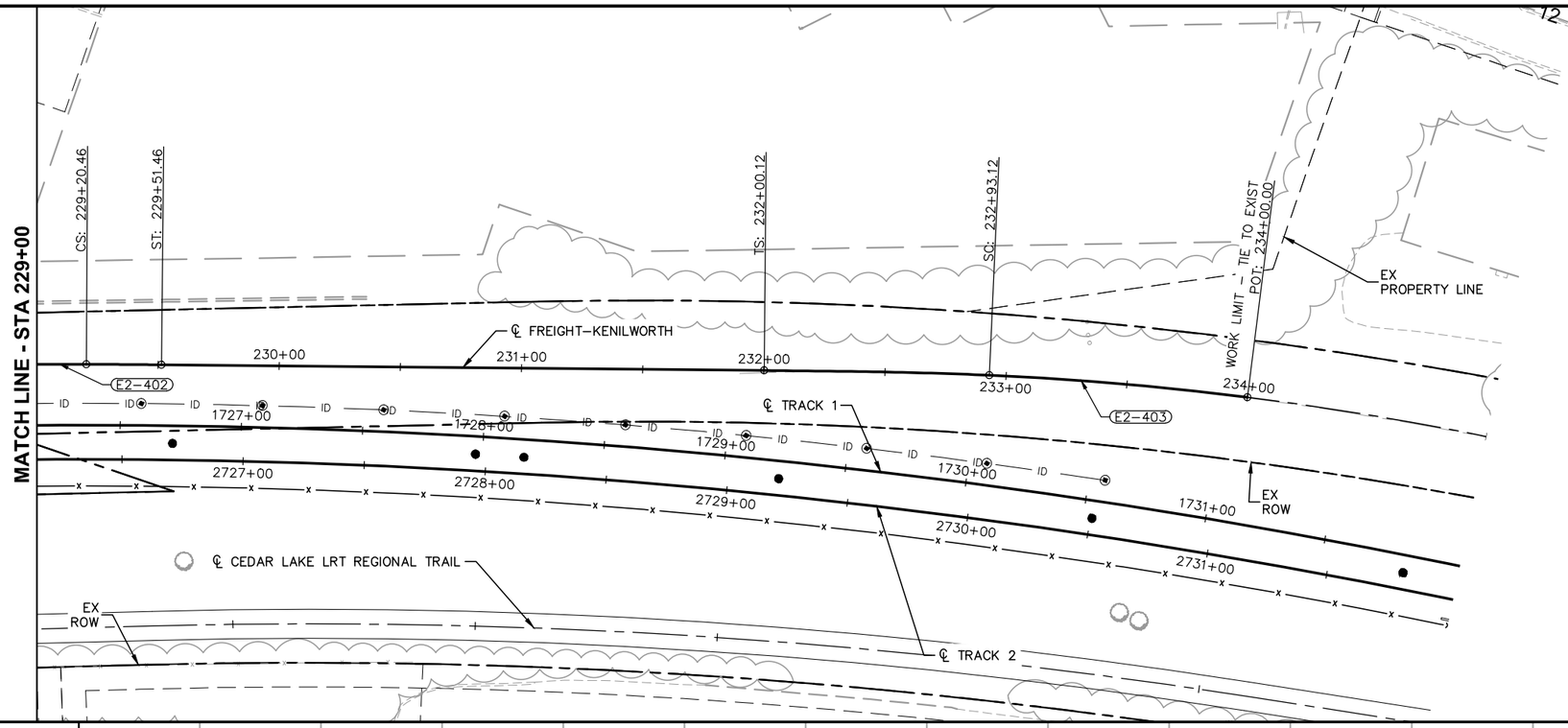

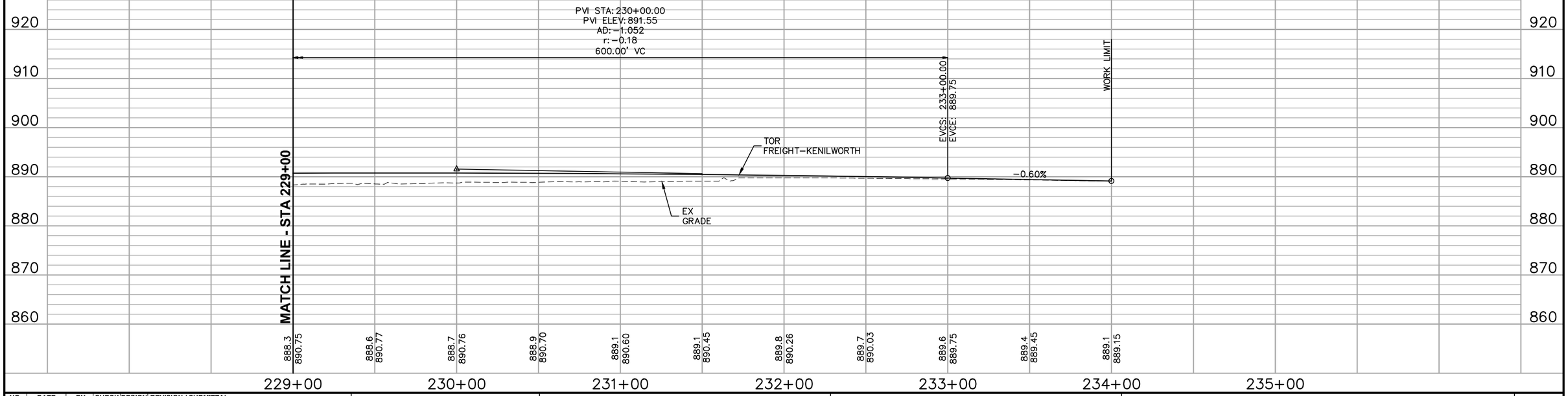

NO.	DATE	BY	CHECK	DESIGN	REVISION / SUBMITTAL

AECOM

90% SUBMISSION - 01/22/16

METROPOLITAN COUNCIL

SOUTHWEST Green Line LRT Extension

CIVIL - VOLUME 3B
FREIGHT
PLAN AND PROFILE
STA 229+00 TO STA 234+00

DISCIPLINE: TRACK

SHEET NAME: E2-FRT-PRF - 020

SHEET 369 OF 420

Jan, 18 2016 11:34 am V:\3400_ADC\CAD\00_EAST\PLANSHEETS\TRACK\E2-FRT-PRF.dwg By: MaurisBM

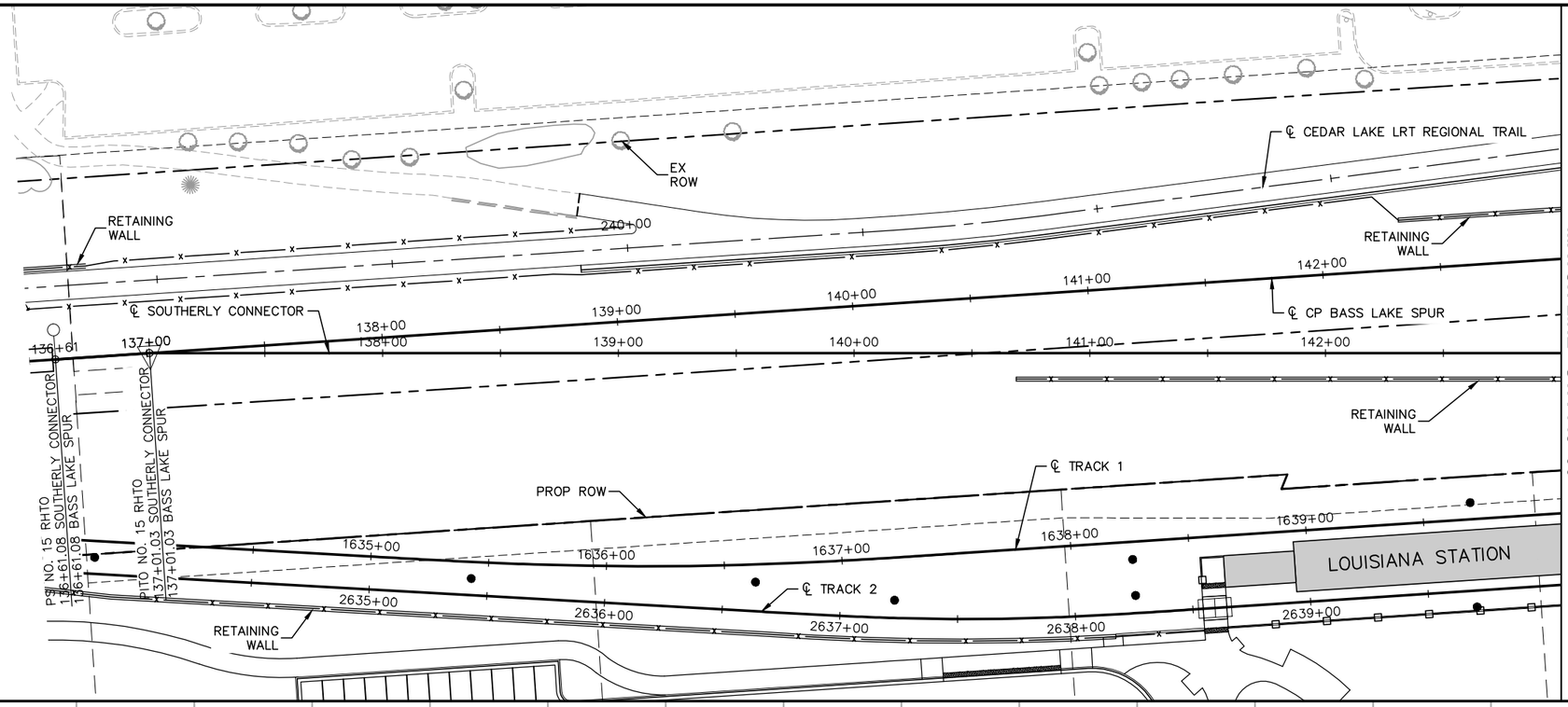

NOTE:
1. SEE SHEET E2-FRT-PRF - 006 FOR BASS LAKE SPUR PROFILE.

0 5 10 20
VERTICAL
0 15 30 60
HORIZONTAL
SCALE IN FEET

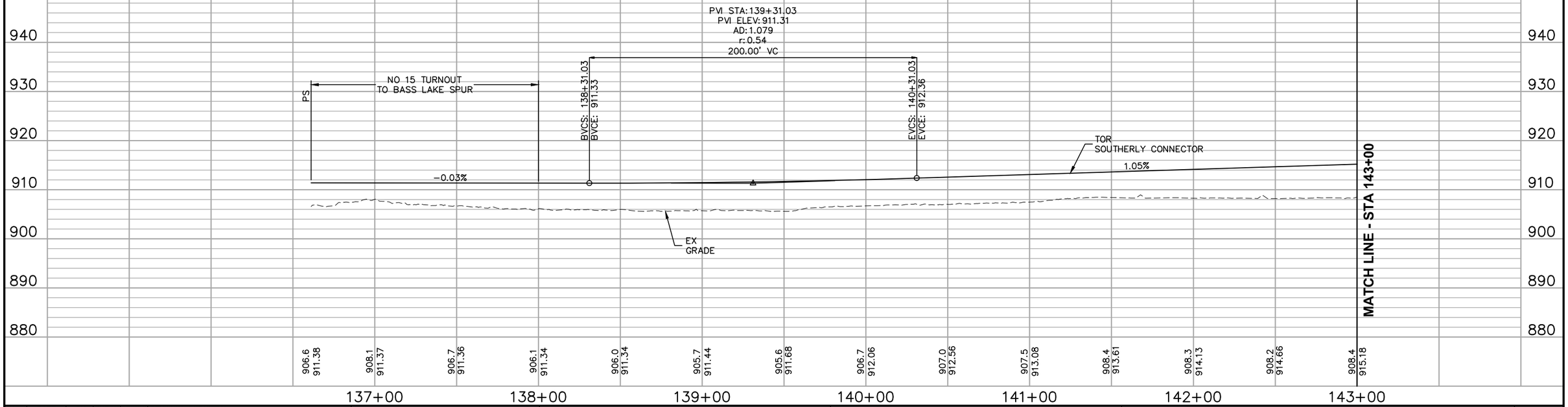

NO.	DATE	BY	CHECK	DESIGN	REVISION / SUBMITTAL

AECOM

90% SUBMISSION - 01/22/16

METROPOLITAN COUNCIL

SOUTHWEST Green Line LRT Extension

CIVIL - VOLUME 3B
FREIGHT
PLAN AND PROFILE
STA 136+61.08 TO STA 143+00

DISCIPLINE: TRACK

SHEET NAME: E2-FRT-PRF - 021

SHEET 370 OF 420

Jan, 18 2016 11:36 am V:\3400_ADC\CAD\00_EAST\PLANSHEETS\TRACK\E2-FRT-PRF.dwg By: MaurisBM

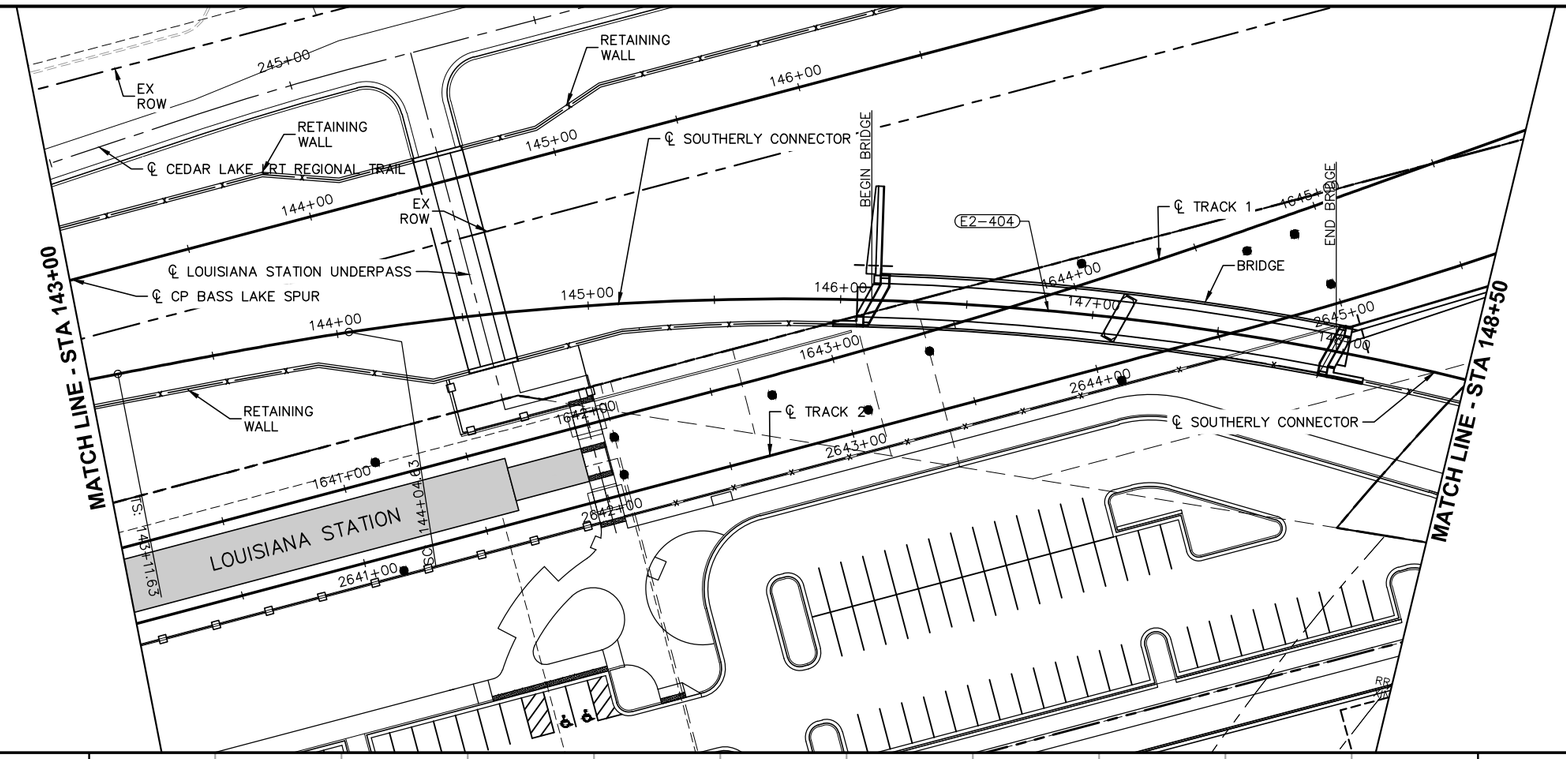

CURVE E2-404
Dc = 5° 00' 00" RH
R = 1,146.28'
Lc = 1,295.56'
Ls = 93.00'
Ea = 0.50"
Eu = 0.29"
V = 15 MPH

NOTE:
1. SEE SHEETS E2-FRT-PRF - 006 AND E2-FRT-PRF - 007 FOR BASS LAKE SPUR PROFILE.

0 5 10 20
VERTICAL
0 15 30 60
HORIZONTAL
SCALE IN FEET

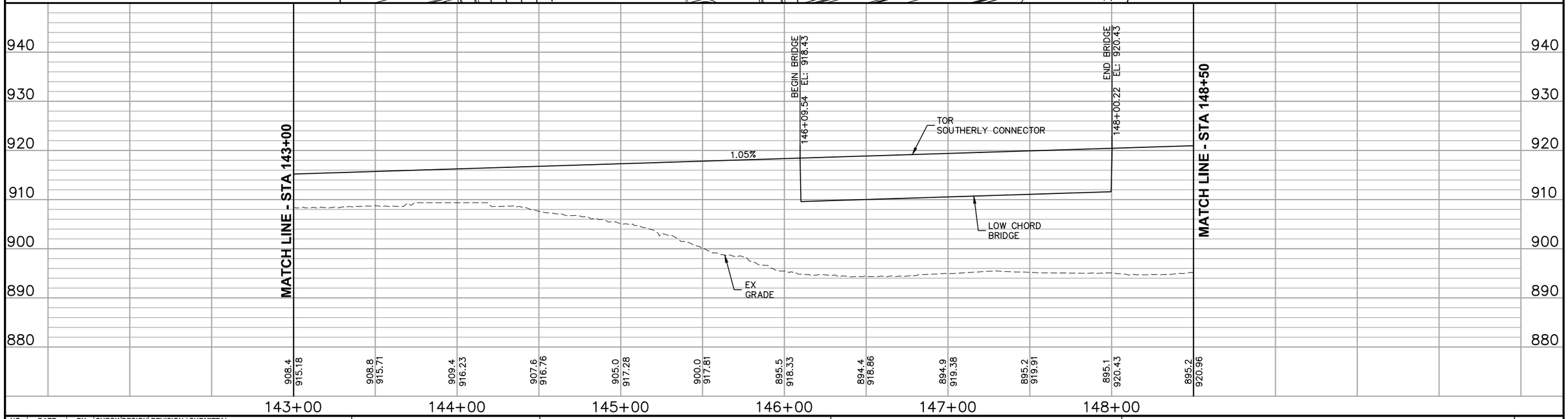

NO.	DATE	BY	CHECK	DESIGN	REVISION / SUBMITTAL

AECOM

90% SUBMISSION - 01/22/16

METROPOLITAN COUNCIL

SOUTHWEST Green Line LRT Extension

CIVIL - VOLUME 3B
FREIGHT
PLAN AND PROFILE
STA 143+00 TO STA 148+50

DISCIPLINE: TRACK

SHEET NAME: E2-FRT-PRF - 022

SHEET 371 OF 420

Jan, 18 2016 11:37 am V:\3400_ADC\CAD\00_EAST\PLANSHEETS\TRACK\E2-FRT-PRF.dwg By: MaurisBM

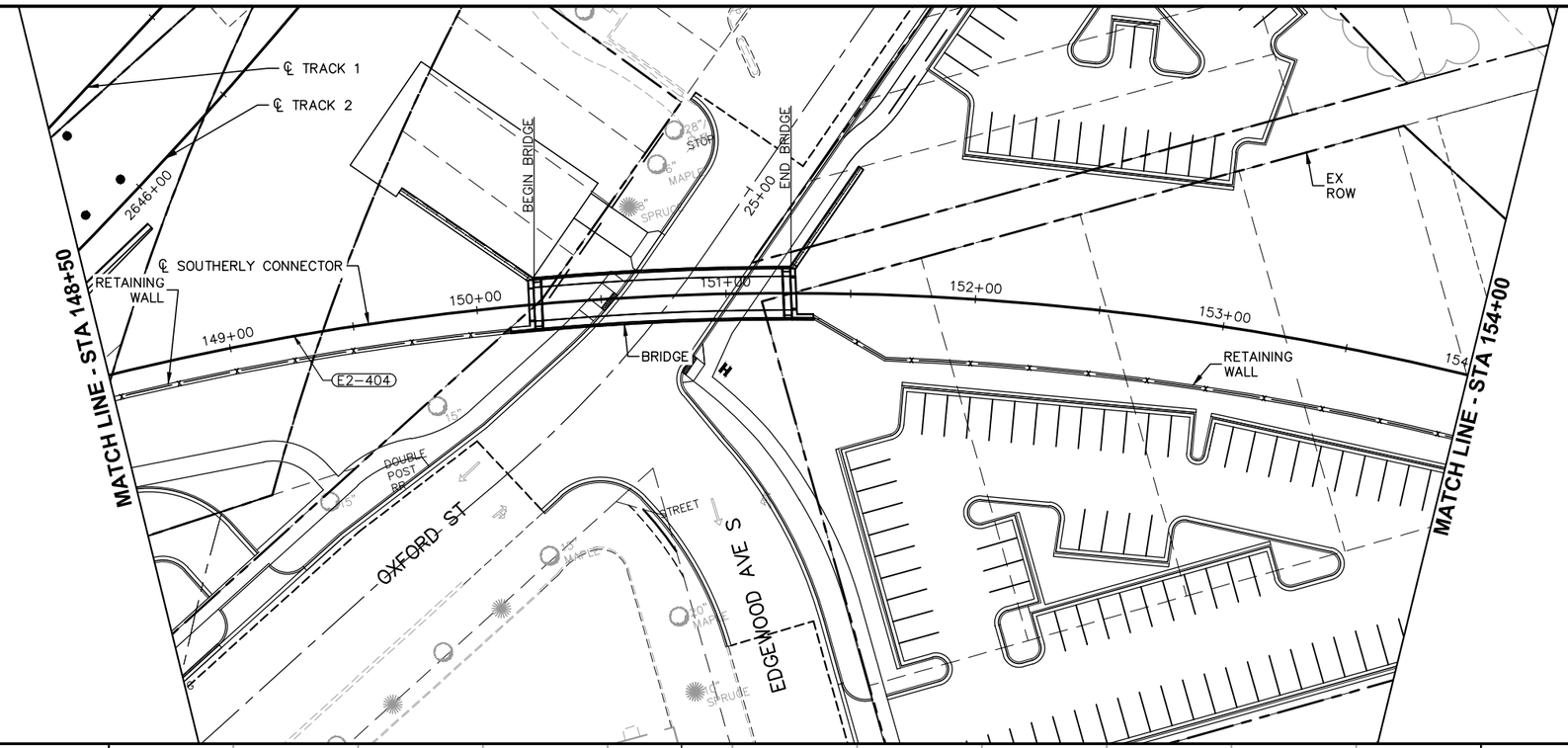



0 5 10 20
VERTICAL
0 15 30 60
HORIZONTAL
SCALE IN FEET

NO.	DATE	BY	CHECK	DESIGN	REVISION / SUBMITTAL

AECOM

90% SUBMISSION - 01/22/16

METROPOLITAN COUNCIL

SOUTHWEST Green Line LRT Extension

CIVIL - VOLUME 3B
FREIGHT
PLAN AND PROFILE
STA 148+50 TO STA 154+00

DISCIPLINE: TRACK

SHEET NAME: E2-FRT-PRF - 023

SHEET 372 OF 420

Jan, 18 2016 11:39 am V:\3400_ADC\CAD\00_EAST\PLANSHEETS\TRACK\E2-FRT-PRF.dwg By: MaurisBM

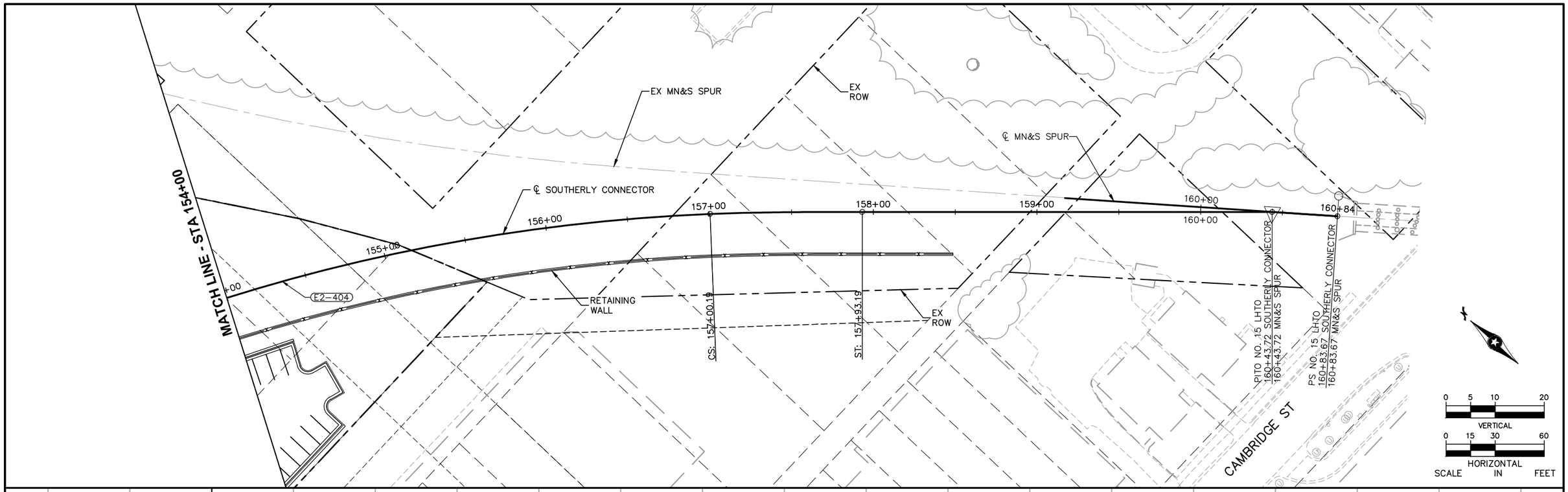

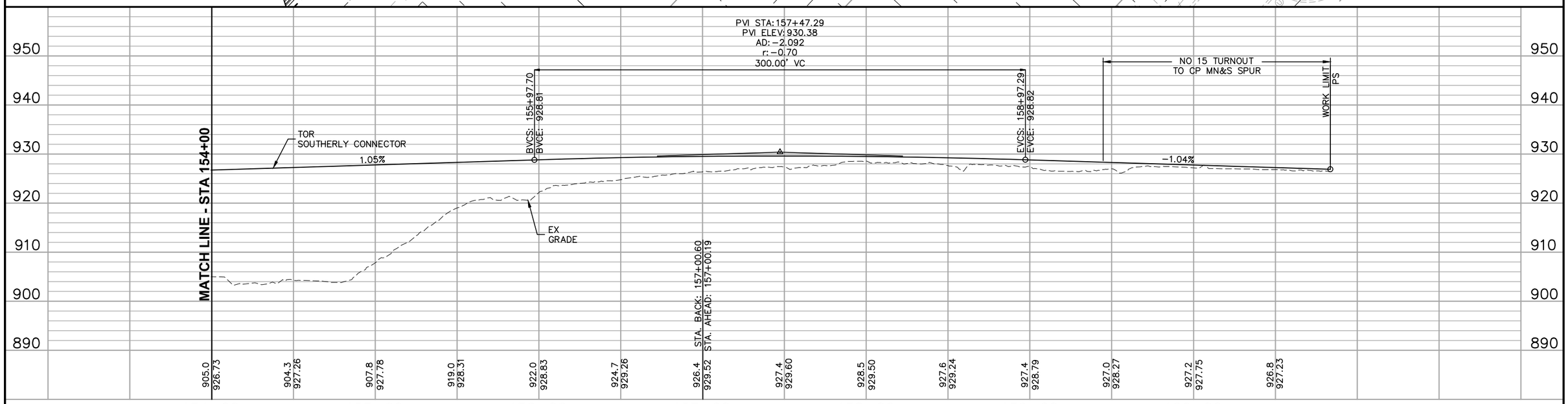

NO.	DATE	BY	CHECK	DESIGN	REVISION / SUBMITTAL

AECOM

90% SUBMISSION - 01/22/16

METROPOLITAN COUNCIL

SOUTHWEST Green Line LRT Extension

CIVIL - VOLUME 3B
FREIGHT
PLAN AND PROFILE
STA 154+00 TO STA 160+83.67

DISCIPLINE: TRACK

SHEET NAME: E2-FRT-PRF - 024

SHEET 373 OF 420

Jan, 18 2016 11:41 am V:\3400_ADC\CAD\00_EAST\PLANSHEETS\TRACK\E2-FRT-PRF.dwg By: MaurisBM

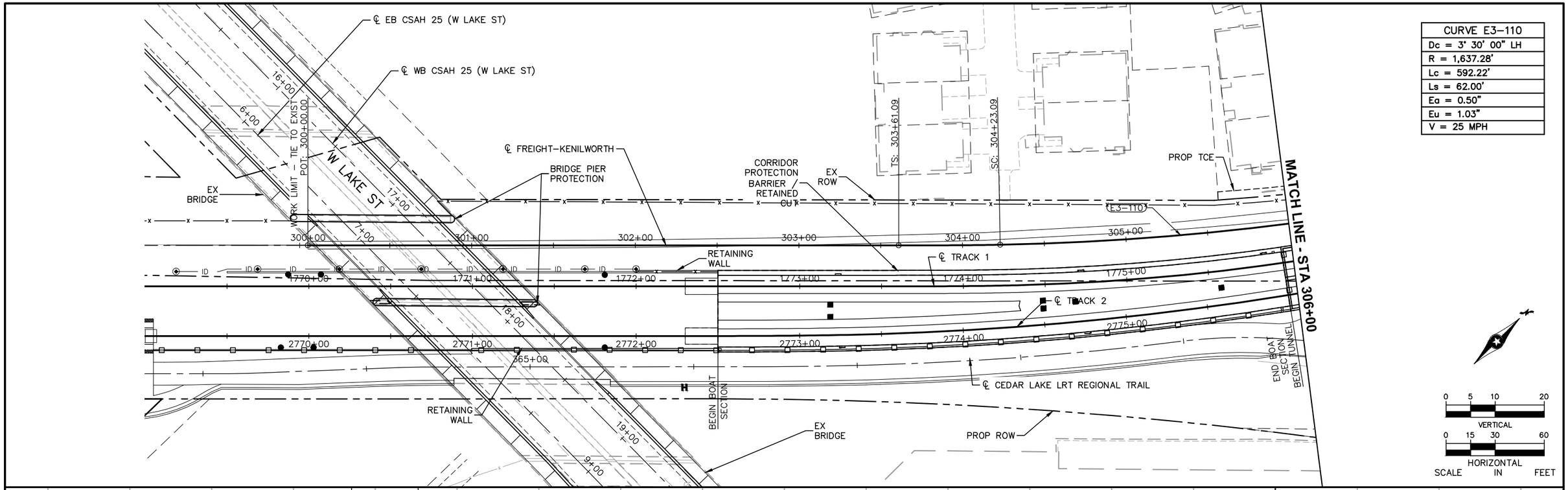

NO.	DATE	BY	CHECK	DESIGN	REVISION / SUBMITTAL

AECOM

90% SUBMISSION - 01/22/16

METROPOLITAN COUNCIL

SOUTHWEST Green Line LRT Extension

CIVIL - VOLUME 3B
FREIGHT
PLAN AND PROFILE
STA 300+00 TO STA 306+00

DISCIPLINE: TRACK

SHEET NAME: E3-FRT-PRF - 001

SHEET 374 OF 420

Jan, 18 2016 11:29 am V:\3400_ADC\CAD\00_EAST\PLANSHEETS\TRACK\E3-FRT-PRF.dwg By: V-RaboodV

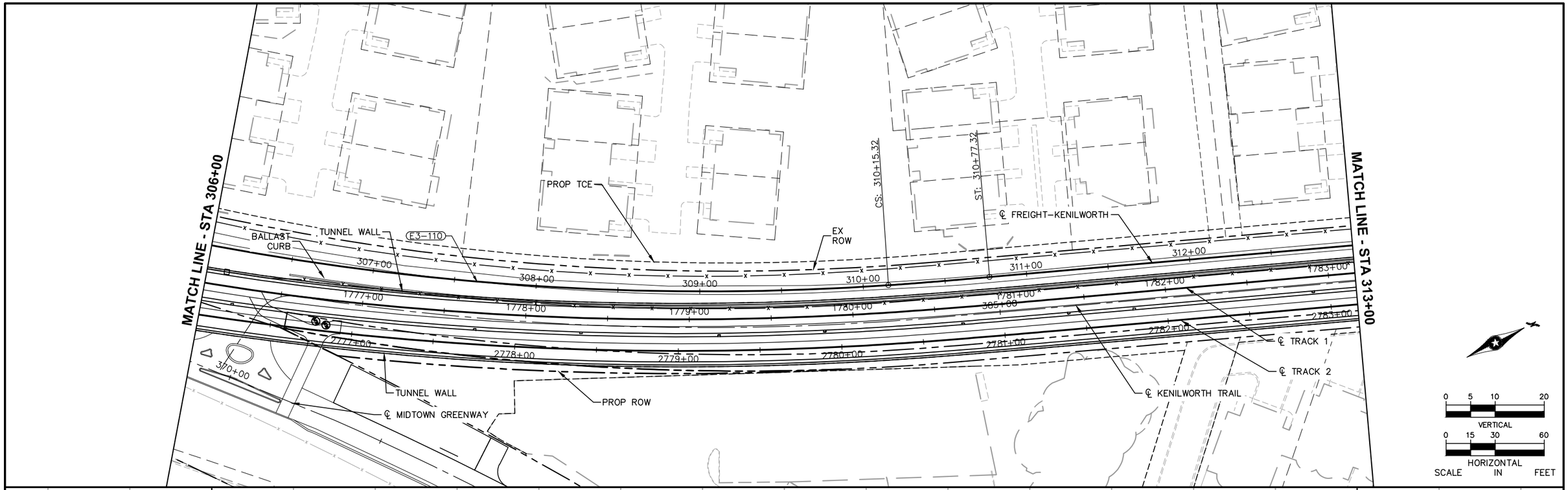

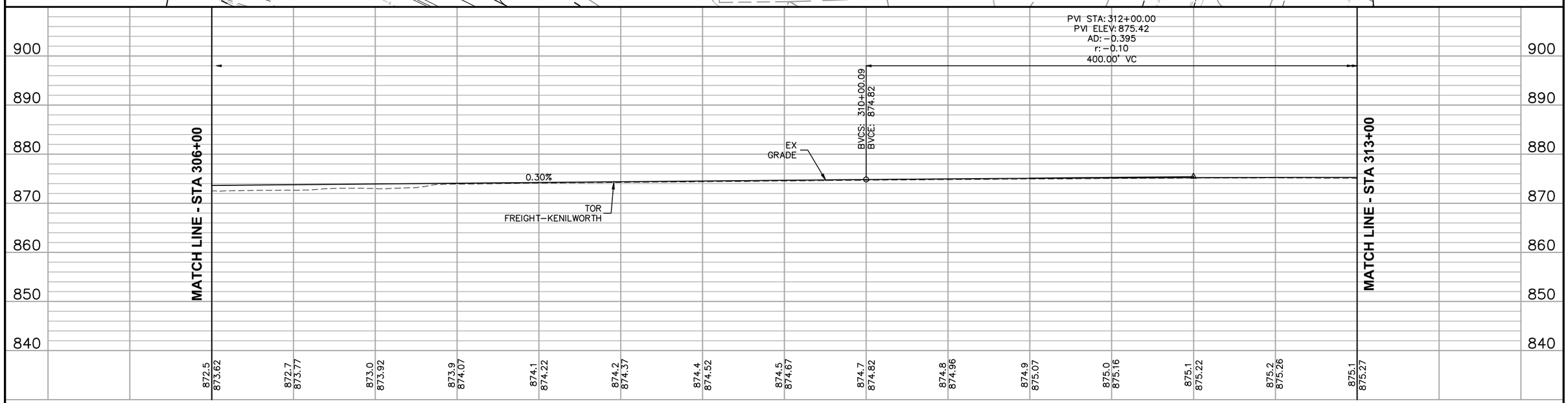

NO.	DATE	BY	CHECK	DESIGN	REVISION / SUBMITTAL

AECOM

90% SUBMISSION - 01/22/16

METROPOLITAN COUNCIL

SOUTHWEST Green Line LRT Extension

CIVIL - VOLUME 3B
FREIGHT
PLAN AND PROFILE
STA 306+00 TO STA 313+00

DISCIPLINE: TRACK

SHEET NAME: E3-FRT-PRF - 002

SHEET 375 OF 420

Jan, 18 2016 11:29 am V:\3400_ADC\CAD\00_EAST\PLANSHEETS\TRACK\E3-FRT-PRF.dwg By: V-RaboodV

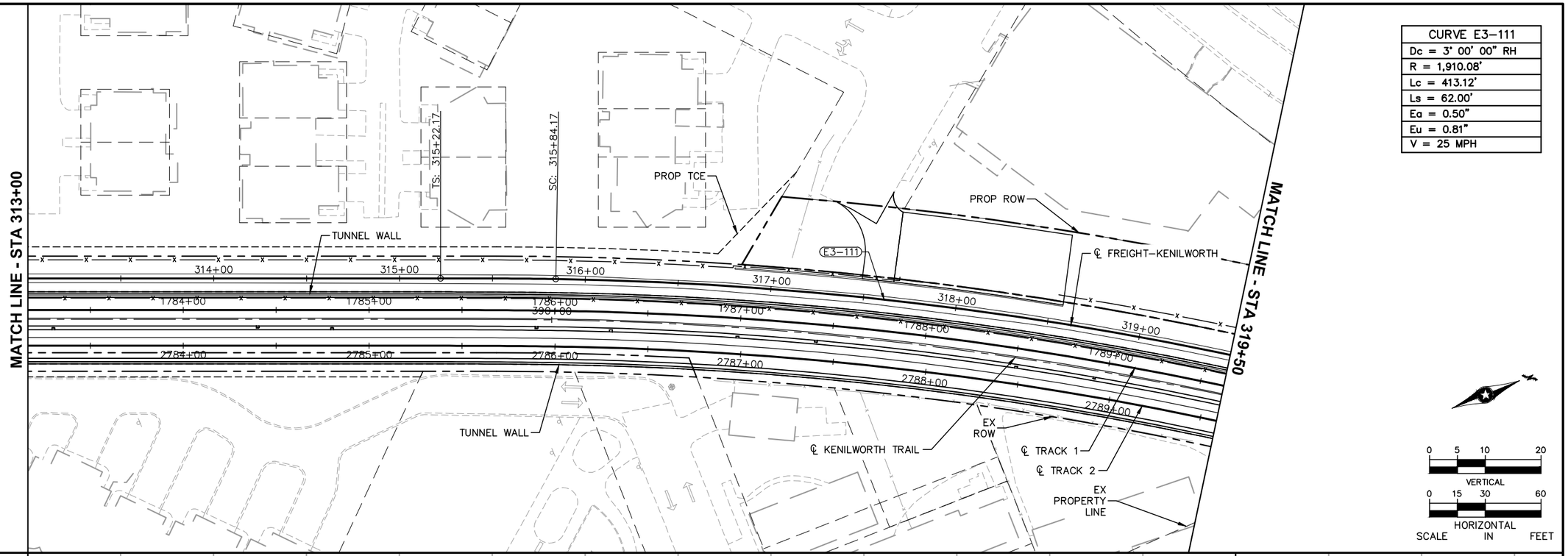

CURVE E3-111
Dc = 3° 00' 00" RH
R = 1,910.08'
Lc = 413.12'
Ls = 62.00'
Ea = 0.50"
Eu = 0.81"
V = 25 MPH

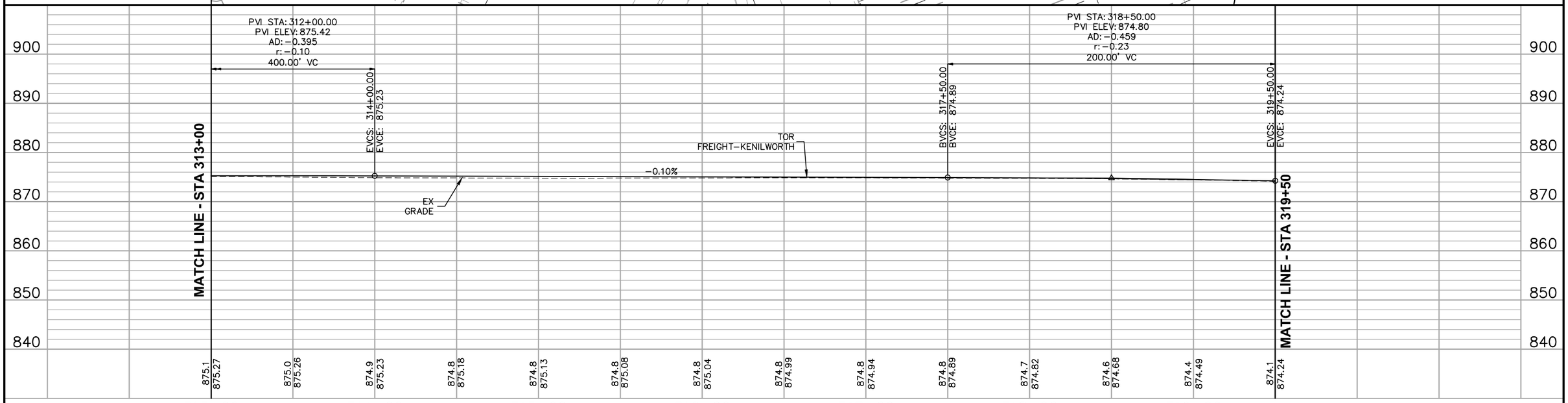

NO.	DATE	BY	CHECK	DESIGN	REVISION / SUBMITTAL

AECOM

90% SUBMISSION - 01/22/16

METROPOLITAN COUNCIL

SOUTHWEST Green Line LRT Extension

CIVIL - VOLUME 3B
FREIGHT
PLAN AND PROFILE
STA 313+00 TO STA 319+50

DISCIPLINE: TRACK

SHEET NAME: E3-FRT-PRF - 003

SHEET 376 OF 420

Jan, 18 2016 11:30 am V:\3400_ADC\CAD\00_EAST\PLANSHEETS\TRACK\E3-FRT-PRF.dwg By: V-RaboodV

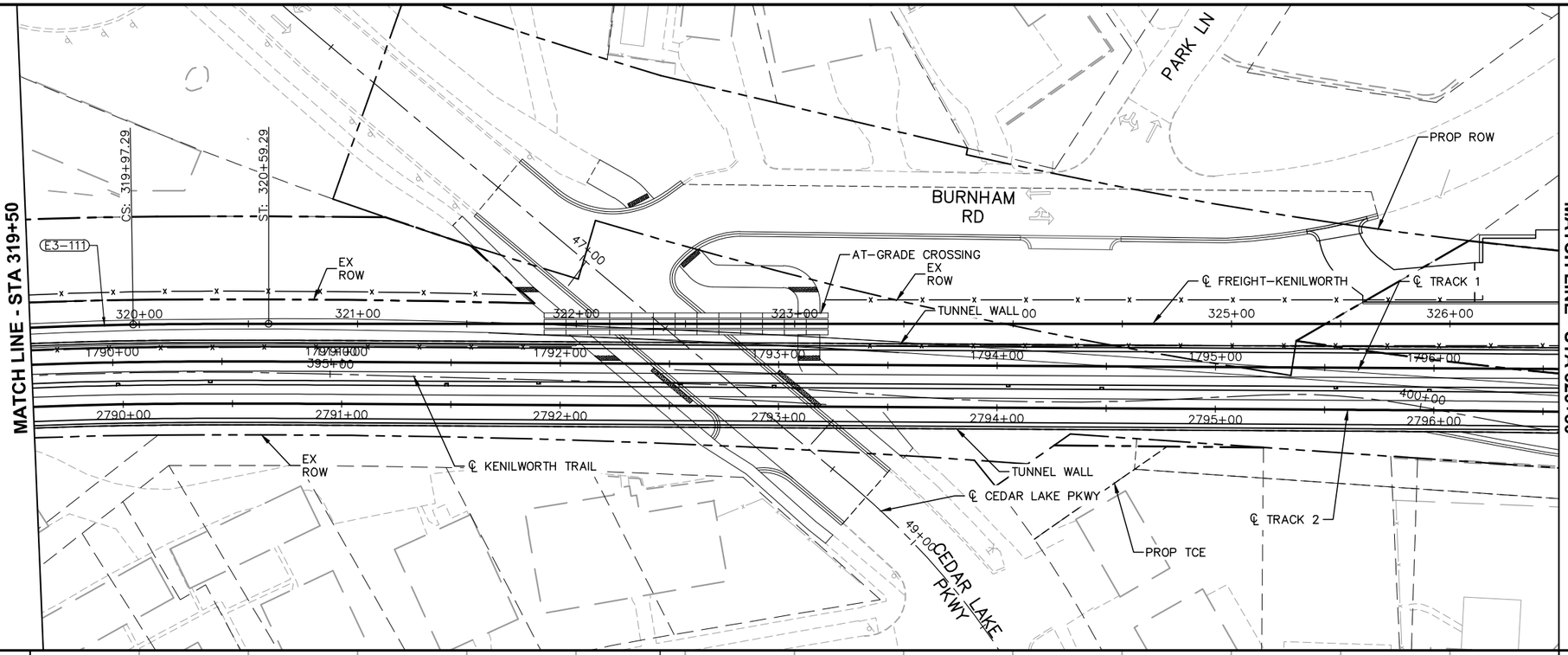

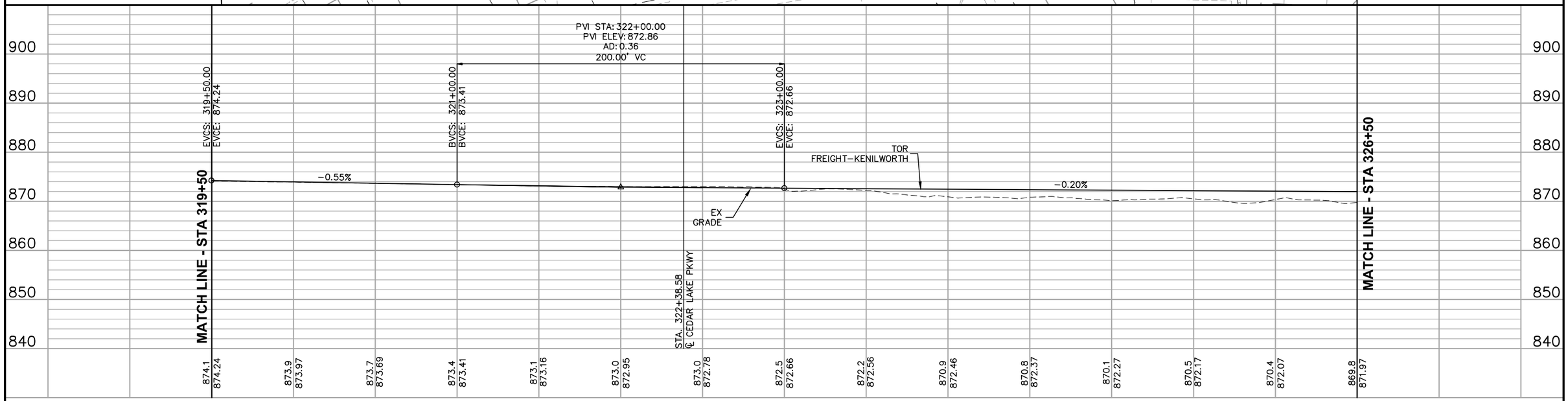

NO.	DATE	BY	CHECK	DESIGN	REVISION / SUBMITTAL

AECOM

90% SUBMISSION - 01/22/16

METROPOLITAN COUNCIL

SOUTHWEST Green Line LRT Extension

CIVIL - VOLUME 3B
FREIGHT
PLAN AND PROFILE
STA 319+50 TO STA 326+50

DISCIPLINE: TRACK

SHEET NAME: E3-FRT-PRF - 004

SHEET 377 OF 420

Jan, 18 2016 11:31 am V:\3400_ADC\CAD\00_EAST\PLANSHEETS\TRACK\E3-FRT-PRF.dwg By: V-RaboodV

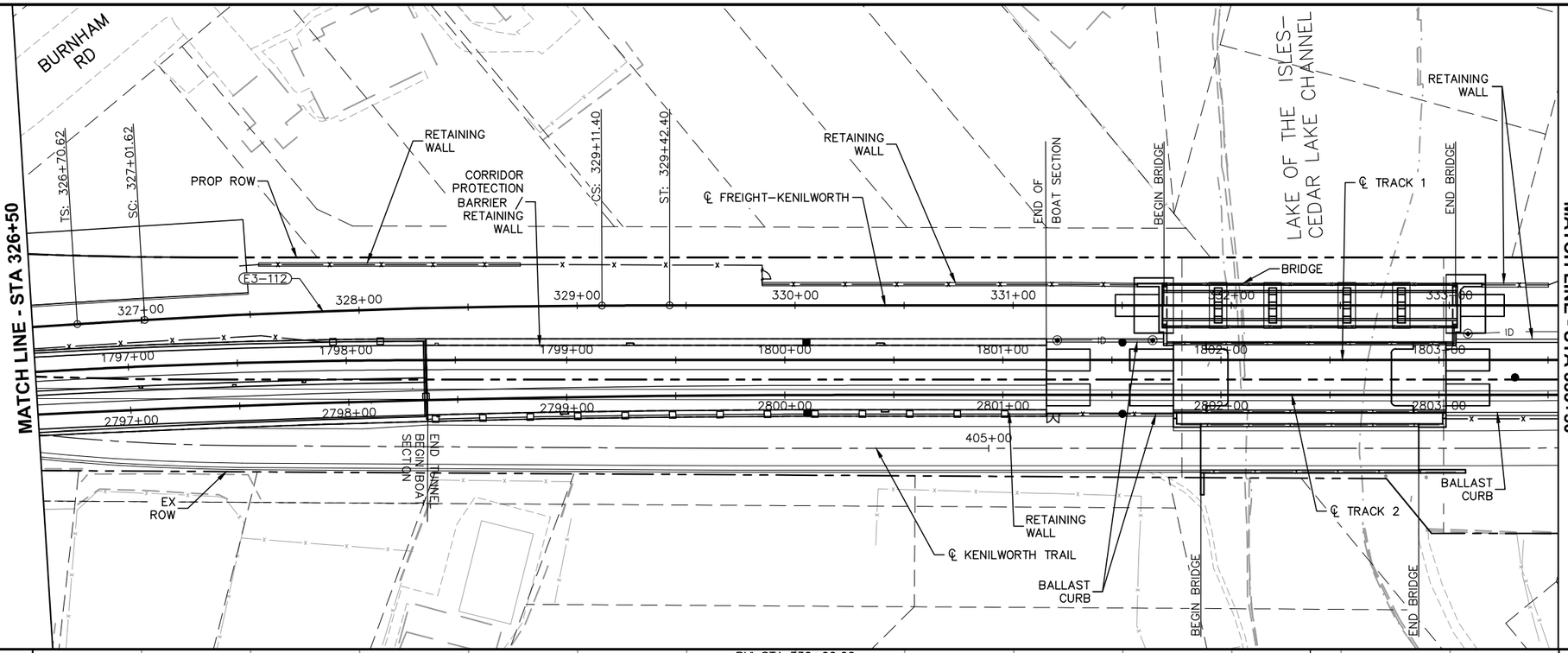

CURVE E3–112
Dc = 1° 30' 00" RH
R = 3,819.83'
Lc = 209.78'
Ls = 31.00'
Ea = 0.50"
Eu = 0.16"
V = 25 MPH

0 5 10 20
VERTICAL
0 15 30 60
HORIZONTAL
SCALE IN FEET

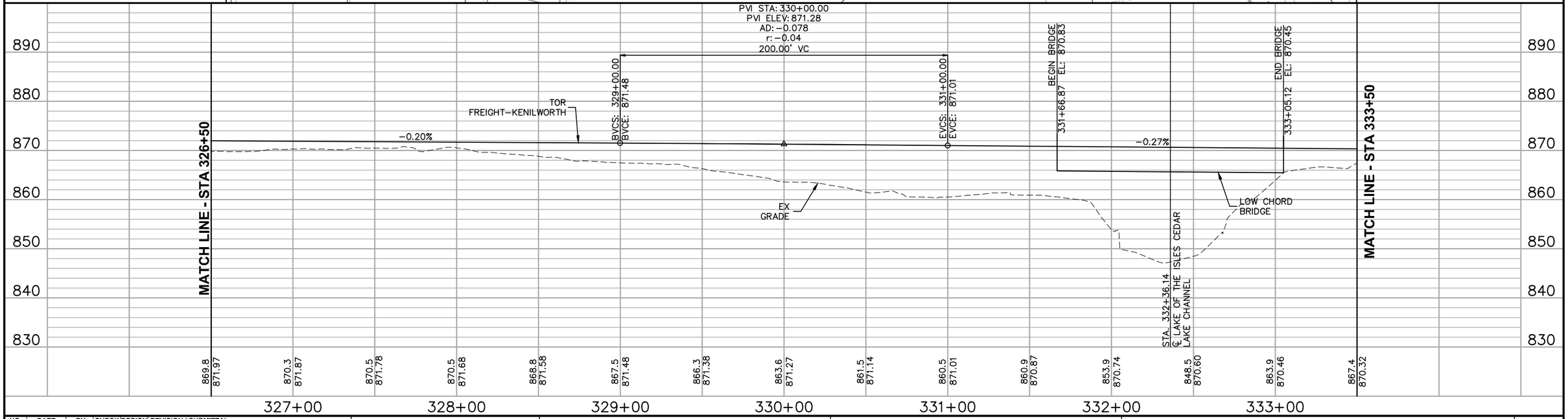

NO.	DATE	BY	CHECK	DESIGN	REVISION / SUBMITTAL

AECOM

90% SUBMISSION - 01/22/16

METROPOLITAN COUNCIL

SOUTHWEST Green Line LRT Extension

CIVIL - VOLUME 3B
FREIGHT
PLAN AND PROFILE
STA 326+50 TO STA 333+50

DISCIPLINE: TRACK

SHEET NAME: E3-FRT-PRF - 005

SHEET 378 OF 420

Jan, 18 2016 11:31 am V:\3400_ADC\CAD\00_EAST\PLANSHEETS\TRACK\E3-FRT-PRF.dwg By: V-RaboodV

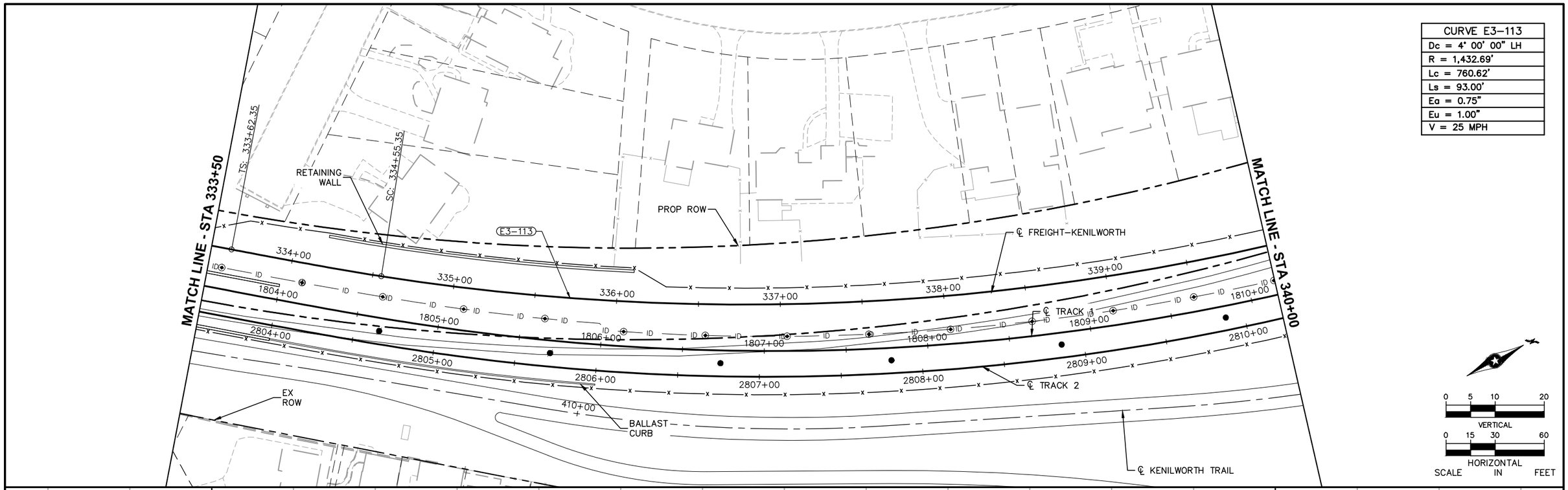

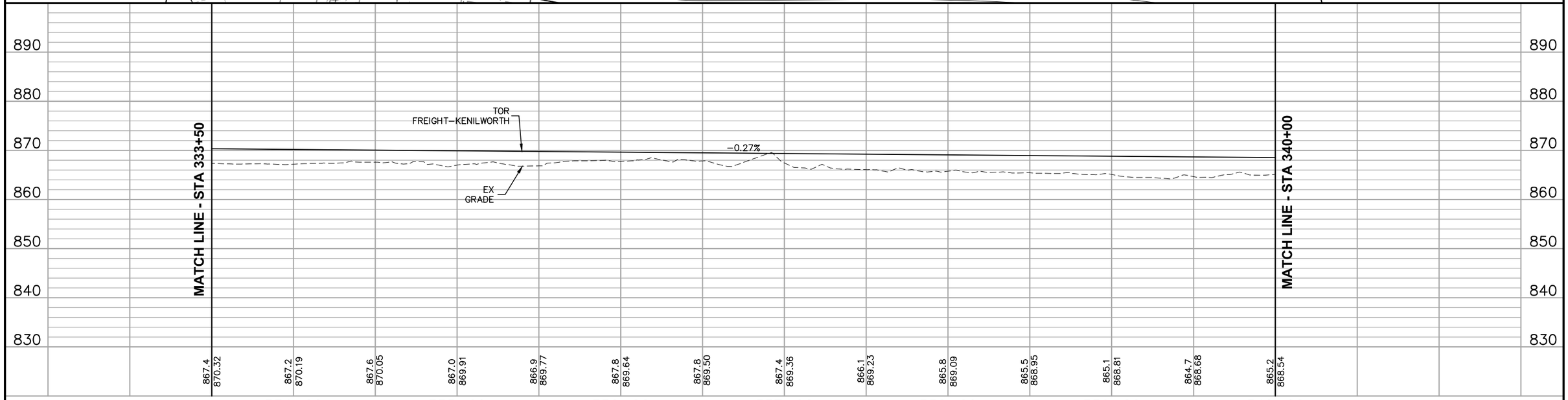

NO.	DATE	BY	CHECK	DESIGN	REVISION / SUBMITTAL

AECOM

90% SUBMISSION - 01/22/16

METROPOLITAN COUNCIL

SOUTHWEST Green Line LRT Extension

CIVIL - VOLUME 3B
FREIGHT
PLAN AND PROFILE
STA 333+50 TO STA 340+00

DISCIPLINE: TRACK

SHEET NAME: E3-FRT-PRF - 006

SHEET 379 OF 420

Jan, 18 2016 11:32 am V:\3400_ADC\CAD\00_EAST\PLANSHEETS\TRACK\E3-FRT-PRF.dwg By: V-RaboodV

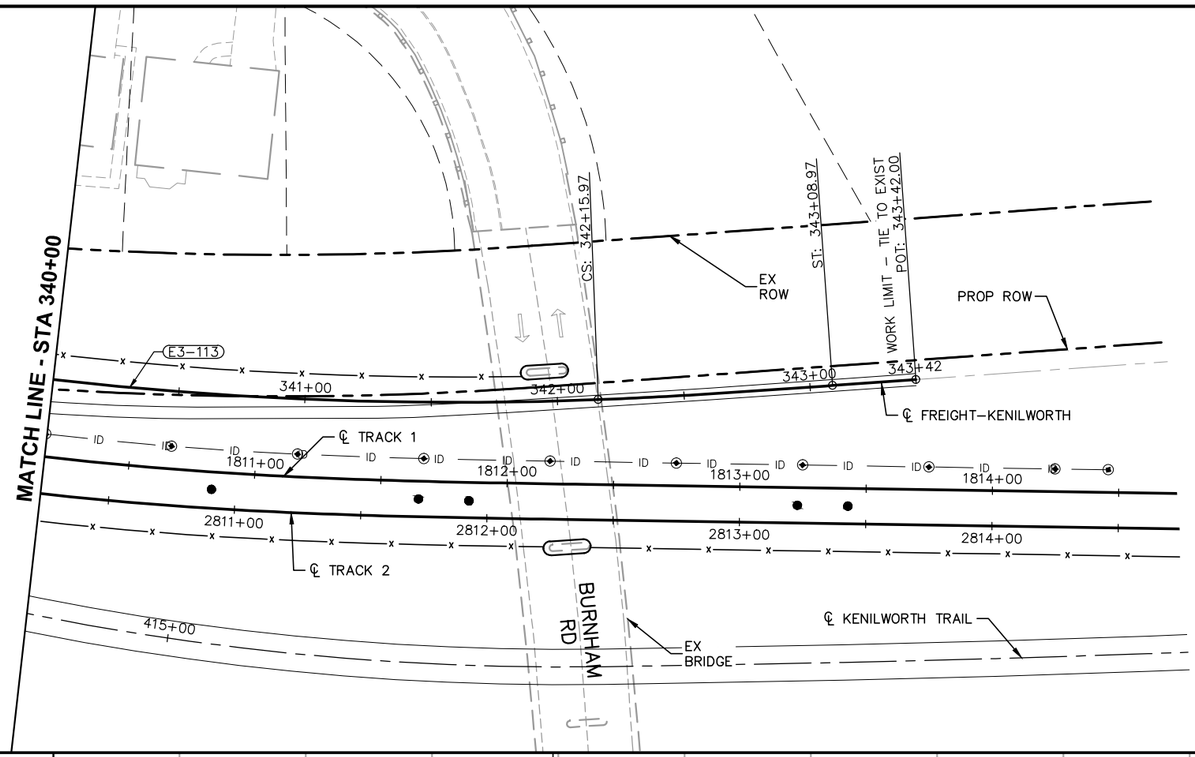

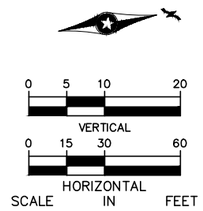

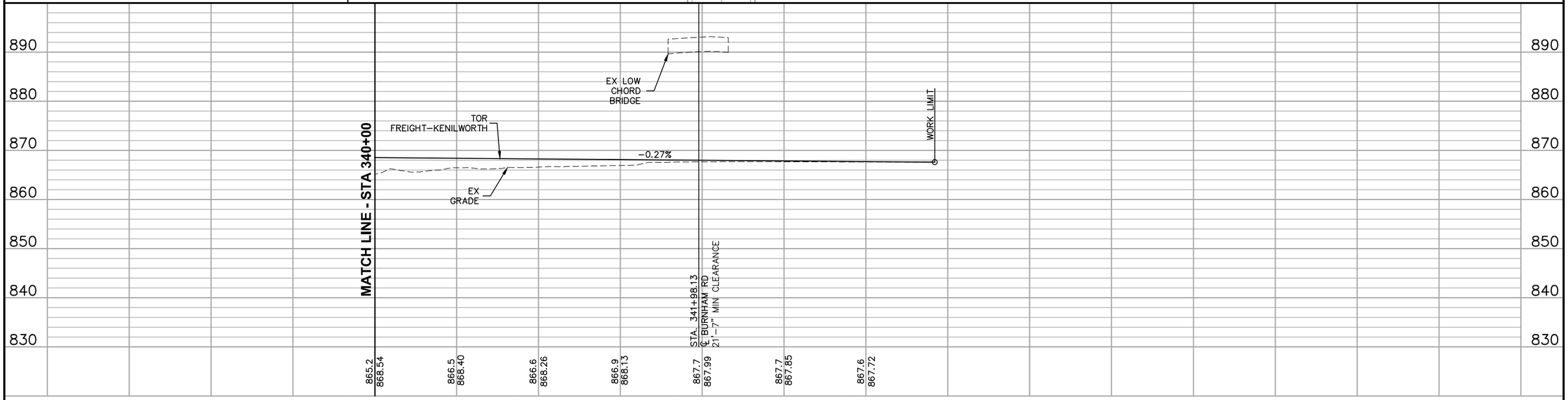

NO.	DATE	BY	CHECK	DESIGN	REVISION / SUBMITTAL

AECOM

90% SUBMISSION - 01/22/16

METROPOLITAN COUNCIL

SOUTHWEST Green Line LRT Extension

CIVIL - VOLUME 3B
FREIGHT
PLAN AND PROFILE
STA 340+00 TO STA 343+42

DISCIPLINE: TRACK

SHEET NAME: E3-FRT-PRF - 007

SHEET 380 OF 420

Jan, 18 2016 11:33 am V:\3400_ADC\CAD\00_EAST\PLANSHEETS\TRACK\E3-FRT-PRF.dwg By: V-RaboodV

FREIGHT- KENILWORTH ALIGNMENT

DESCRIPTION	POINT DESC.	STATIONING	COORDINATES		SPIRAL AND CURVE DATA / EQUATIONS				TANGENT	
			NORTHING	EASTING					DISTANCE	BEARING
CURVE	WORK LIMIT POC	357+29.91	161965.0368	517733.4920	Icc =	2° 36' 2'' Left	Dc =	2° 10' 0.4''		
	WORK LIMIT POC	358+49.94	162084.8875	517727.1595	Rc =	2644.45	Ea =	0.00''		
					Lc =	120.03'	Eu =	0.15''		
							V =	10 MPH		

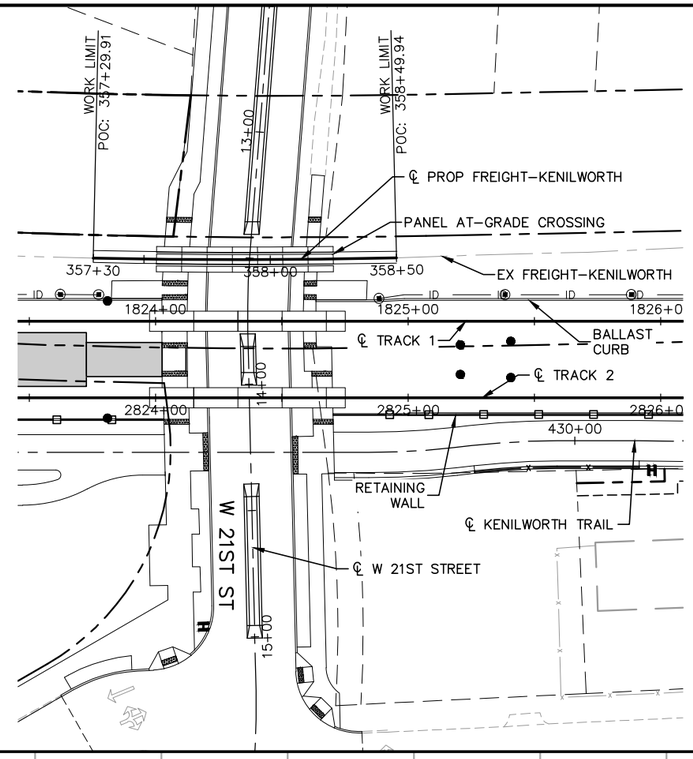

NOTES:
1. SUBGRADE WORK IDENTIFIED IS SPECIFIC FOR THIS CROSSING ONLY

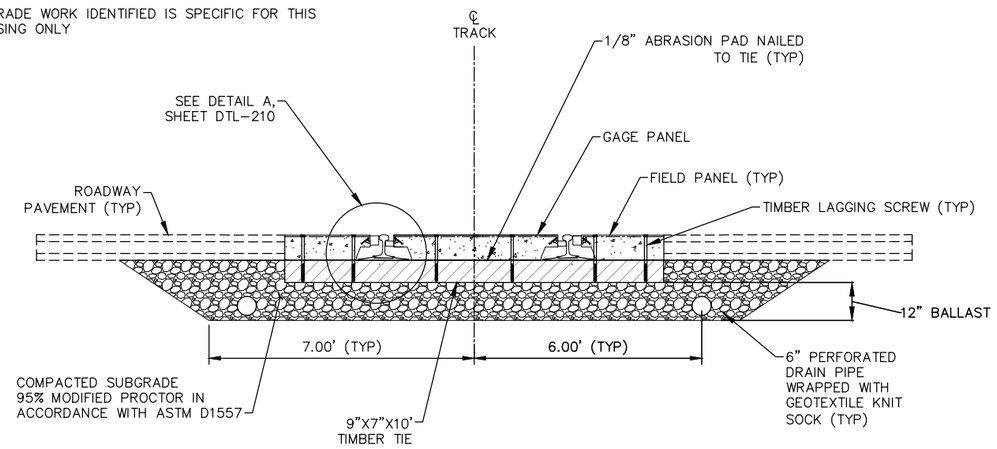

TYPICAL SECTION
PANEL AT–GRADE CROSSING
N.T.S.

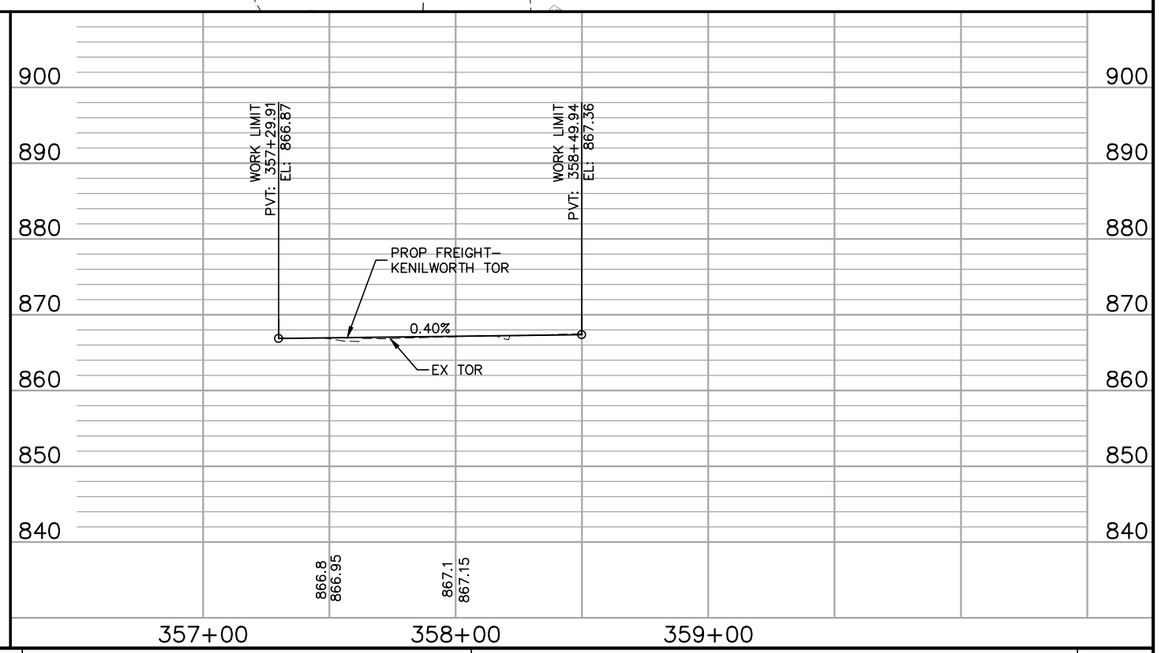

NO.	DATE	BY	CHECK	DESIGN	REVISION / SUBMITTAL

AECOM

90% SUBMISSION - 01/22/16

METROPOLITAN COUNCIL

SOUTHWEST Green Line LRT Extension

CIVIL - VOLUME 3B
FREIGHT
PLAN AND PROFILE
STA 357+29.91 TO STA 358+49.94

DISCIPLINE: TRACK

SHEET NAME: E3-FRT-PRF - 008

SHEET 381 OF 420

Jan, 18 2016 11:33 am V:\3400_ADC\CAD\00_EAST\PLANSHEETS\TRACK\E3-FRT-PRF.dwg By: V-RaboodV

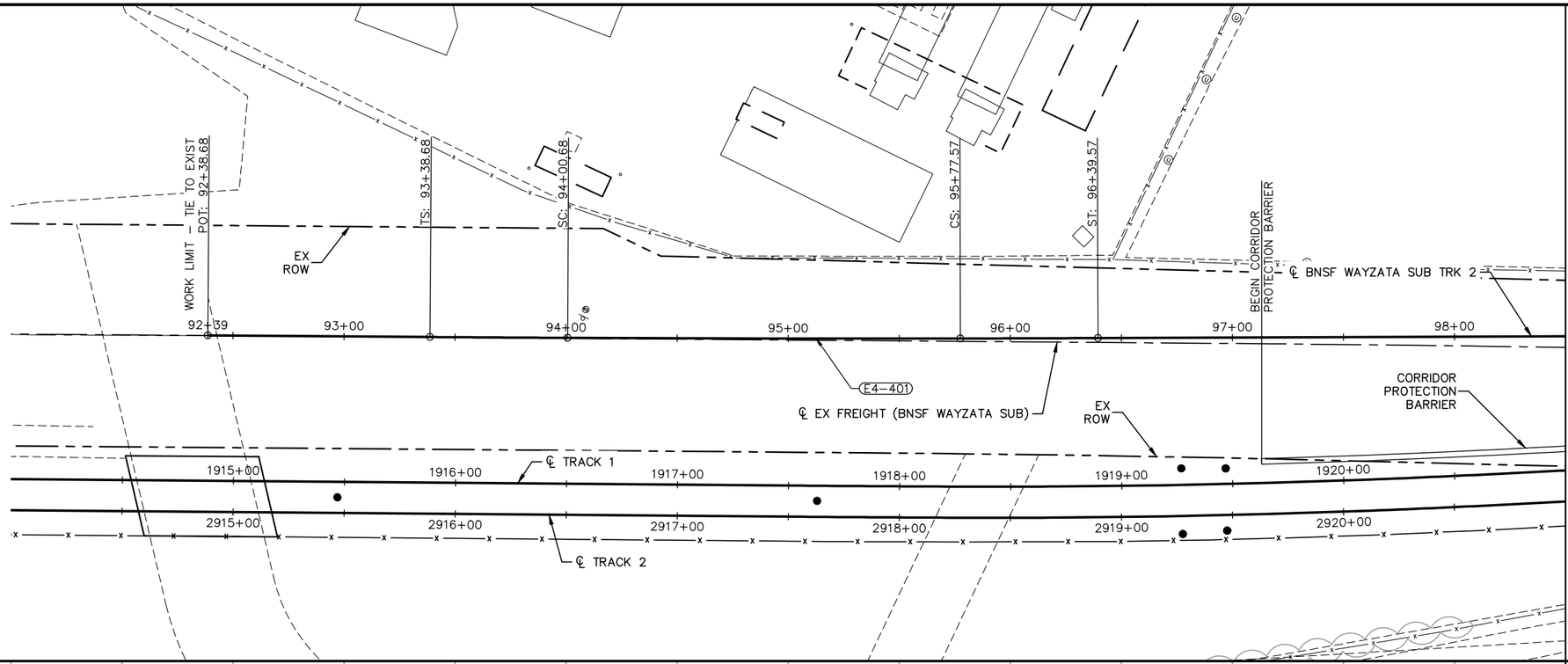

MATCH LINE - STA 98+50

CURVE E4–401
Dc = 0° 15' 00" LH
R = 22,918.33'
Lc = 176.89'
Ls = 62.00'
Ea = 0.00"
Eu = 0.11"
V = 25 MPH

0 5 10 20
VERTICAL
0 15 30 60
HORIZONTAL
SCALE IN FEET

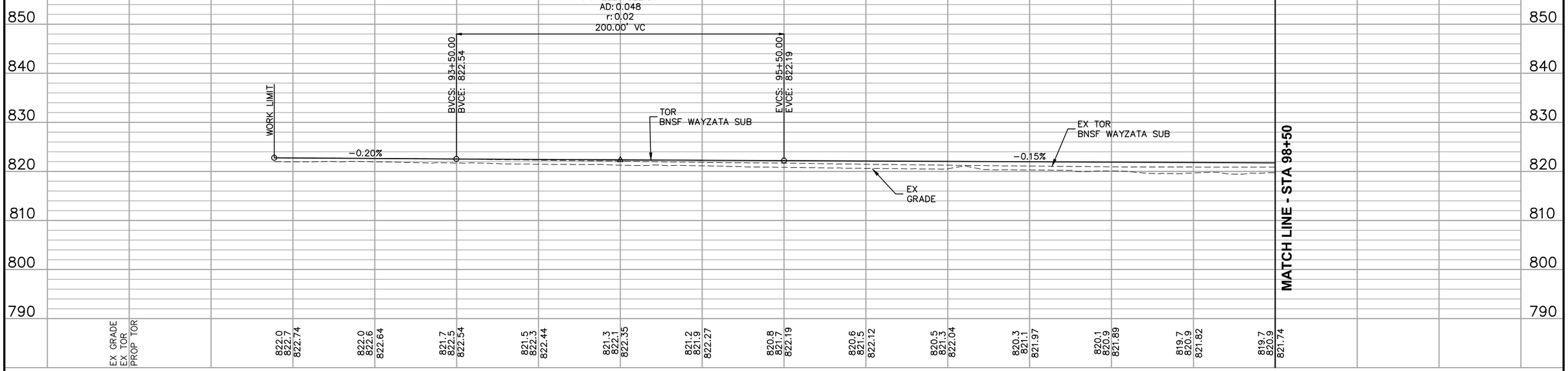

NO.	DATE	BY	CHECK	DESIGN	REVISION / SUBMITTAL

AECOM

90% SUBMISSION - 01/22/16

METROPOLITAN COUNCIL

SOUTHWEST Green Line LRT Extension

CIVIL - VOLUME 3B
FREIGHT
PLAN AND PROFILE
STA 92+38.68 TO STA 98+50

DISCIPLINE: TRACK

SHEET NAME: E4-FRT-PRF-001

SHEET 382 OF 420

Jan, 18 2016 11:32 am V:\3400_ADC\CAD\00_EAST\PLANSHEETS\TRACK\E4-FRT-PRF.dwg By: V-BurrellM

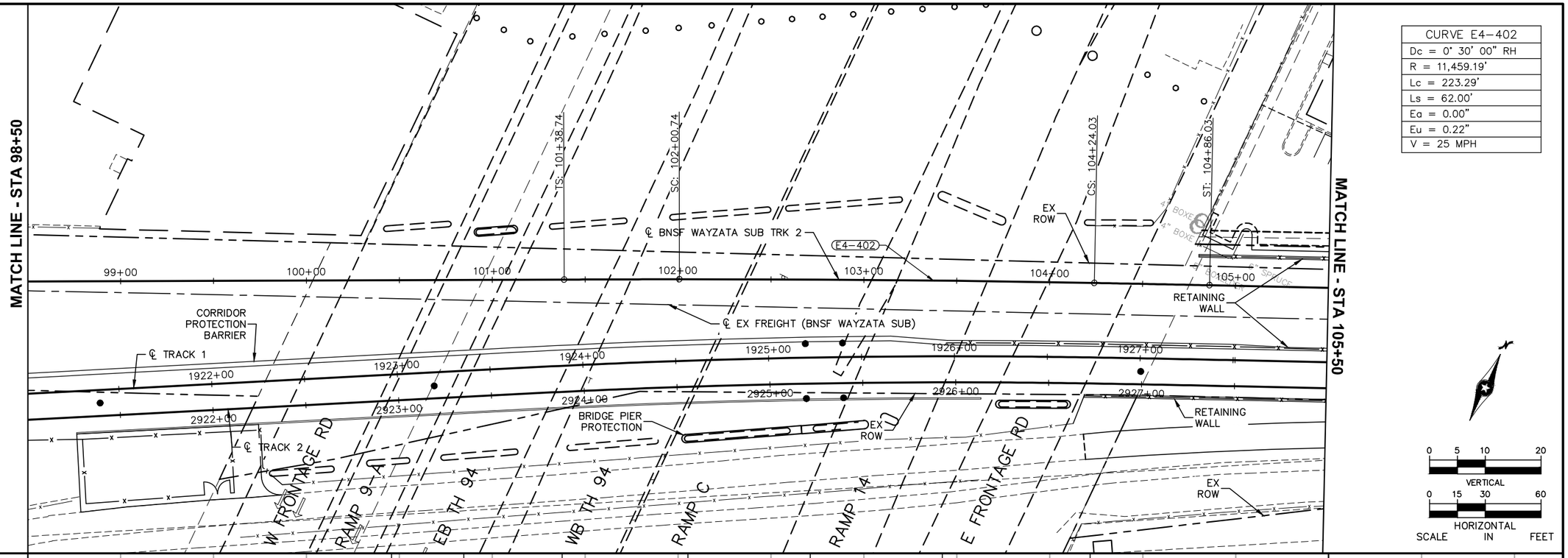

NO.	DATE	BY	CHECK	DESIGN	REVISION / SUBMITTAL

AECOM

90% SUBMISSION - 01/22/16

METROPOLITAN COUNCIL

SOUTHWEST Green Line LRT Extension

CIVIL - VOLUME 3B
FREIGHT
PLAN AND PROFILE
STA 98+50 TO STA 105+50

DISCIPLINE: TRACK

SHEET NAME: E4-FRT-PRF-002

SHEET 383 OF 420

Jan, 18 2016 11:33 am V:\3400_ADC\CAD\00_EAST\PLANSHEETS\TRACK\E4-FRT-PRF.dwg By: V-BurrellM

CURVE E4–403
Dc = 1° 31' 41" LH
R = 3,750.00'
Lc = 536.44'
Ls1 = 160.00'
Ls2 = 100.00'
Ea = 0.50"
Eu = 0.17"
V = 25 MPH

MATCH LINE - STA 105+50

MATCH LINE - STA 112+00

CSAH 40 (GLENWOOD AVE)

6+00

7+00

TS: 107+26.66

SC: 108+86.66

RETAINING WALL

℄ CSAH 40 (GLENWOOD AVE)

EX ROW

RETAINING WALL

℄ EX FREIGHT (BNSF WAYZATA SUB)

106+00

107+00

108+00

109+00

110+00

111+00

95' SPRUCE

E4–403

℄ TRACK 1

BRIDGE

℄ BNSF WAYZATA SUB TRK 2

1929+00

1930+00

1931+00

1932+00

1933+00

1934+00

RETAINING WALL

2929+00

2930+00

2931+00

2932+00

2933+00

2934+00

℄ TRACK 2

EX ROW

BEGIN BRIDGE

0 5 10 20

VERTICAL

0 15 30 60

HORIZONTAL

SCALE IN FEET

PVI STA: 112+00.00
PVI ELEV: 819.72
AD: 0.600
r: 0.05
1200.00' VC

BVCS: 106+00.00
BVCE: 820.62

LOW CHORD BRIDGE

EX TOR BNSF WAYZATA SUB

TOR BNSF WAYZATA SUB

EX GRADE

-0.15%

850 840 830 820 810 800 790

821.1 822.3 820.69

821.2 822.5 820.62

822.0 822.6 820.55

821.3 822.7 820.49

821.0 822.8 820.45

821.3 822.7 820.42

820.8 822.7 820.40

821.5 822.6 820.39

821.1 822.6 820.40

821.3 822.5 820.42

821.7 822.5 820.45

824.6 822.4 820.49

833.0 822.4 820.55

848.6 822.4 820.62

106+00 107+00 108+00 109+00 110+00 111+00 112+00

NO.	DATE	BY	CHECK	DESIGN	REVISION / SUBMITTAL

AECOM

90% SUBMISSION - 01/22/16

METROPOLITAN COUNCIL

SOUTHWEST Green Line LRT Extension

CIVIL - VOLUME 3B
FREIGHT
PLAN AND PROFILE
STA 105+50 TO STA 112+00

DISCIPLINE: TRACK

SHEET NAME: E4-FRT-PRF-003

SHEET 384 OF 420

Jan, 18 2016 11:34 am V:\3400_ADC\CAD\00_EAST\PLANSHEETS\TRACK\E4-FRT-PRF.dwg By: V-BurrellM

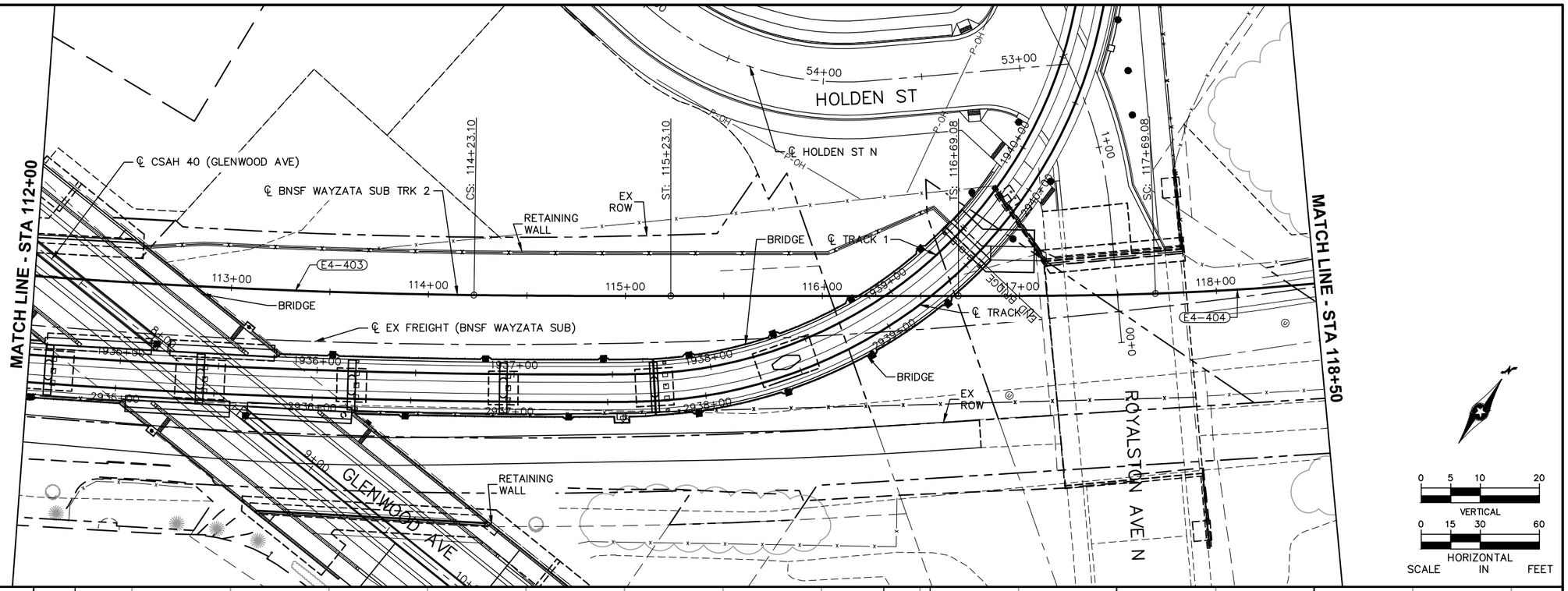

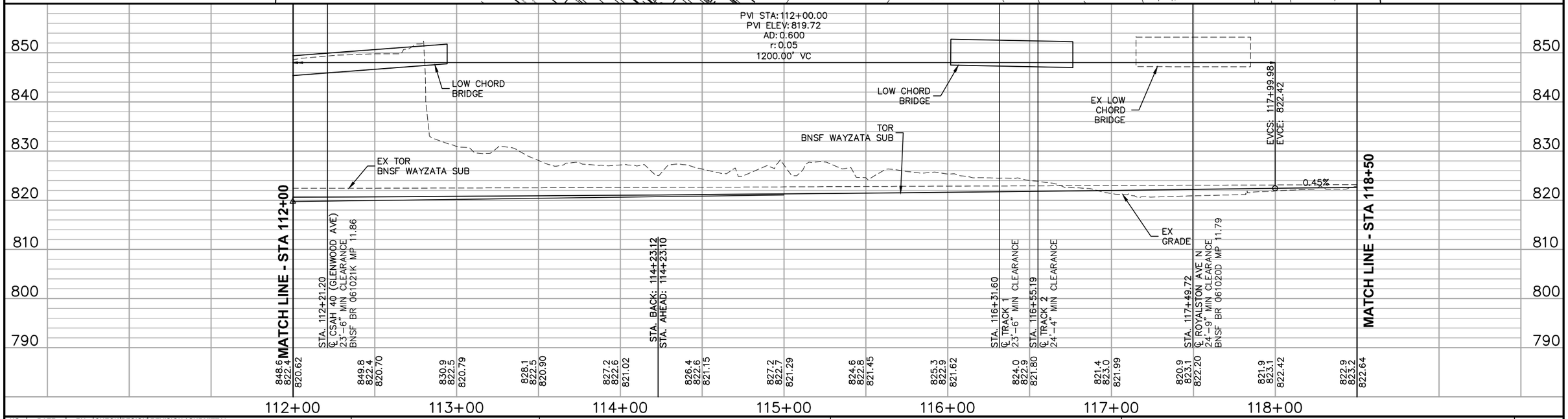

NO.	DATE	BY	CHECK	DESIGN	REVISION / SUBMITTAL

AECOM

90% SUBMISSION - 01/22/16

METROPOLITAN COUNCIL

SOUTHWEST Green Line LRT Extension

CIVIL - VOLUME 3B
FREIGHT
PLAN AND PROFILE
STA 112+00 TO STA 118+50

DISCIPLINE: TRACK

SHEET NAME: E4-FRT-PRF-004

SHEET 385 OF 420

Jan, 18 2016 11:35 am V:\3400_ADC\CAD\00_EAST\PLANSHEETS\TRACK\E4-FRT-PRF.dwg By: V-BurrellM

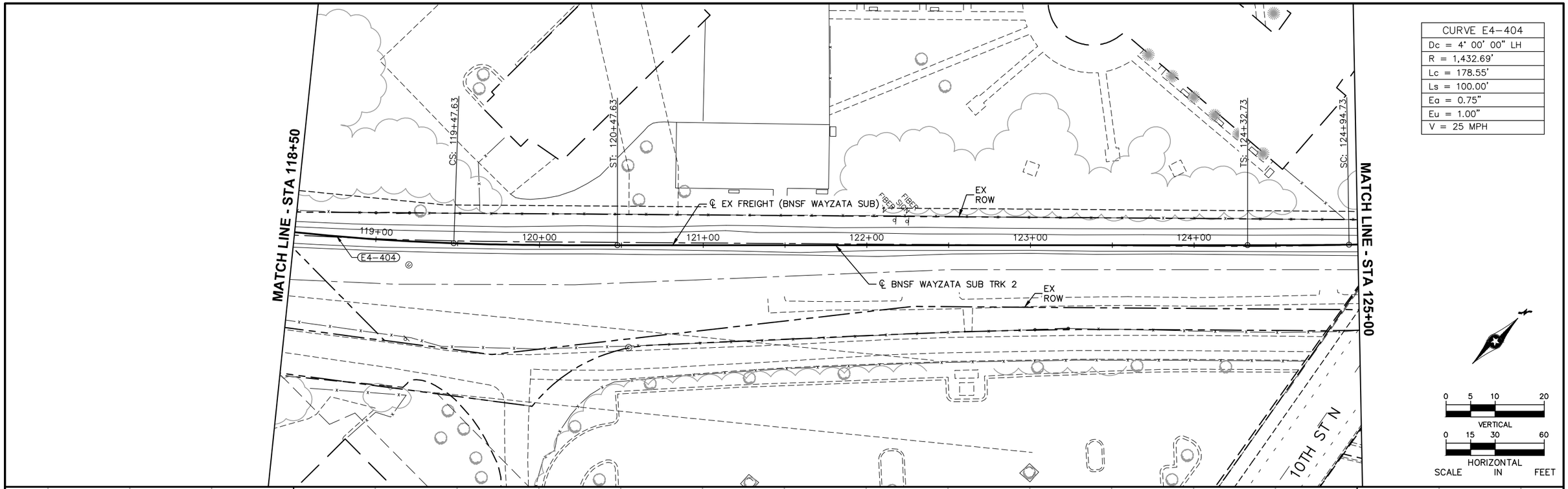

NO.	DATE	BY	CHECK	DESIGN	REVISION / SUBMITTAL

AECOM

90% SUBMISSION - 01/22/16

METROPOLITAN COUNCIL

SOUTHWEST Green Line LRT Extension

CIVIL - VOLUME 3B
FREIGHT
PLAN AND PROFILE
STA 118+50 TO STA 125+00

DISCIPLINE: TRACK

SHEET NAME: E4-FRT-PRF-005

SHEET 386 OF 420

Jan, 18 2016 11:36 am V:\3400_ADC\CAD\00_EAST\PLANSHEETS\TRACK\E4-FRT-PRF.dwg By: V-BurrellM

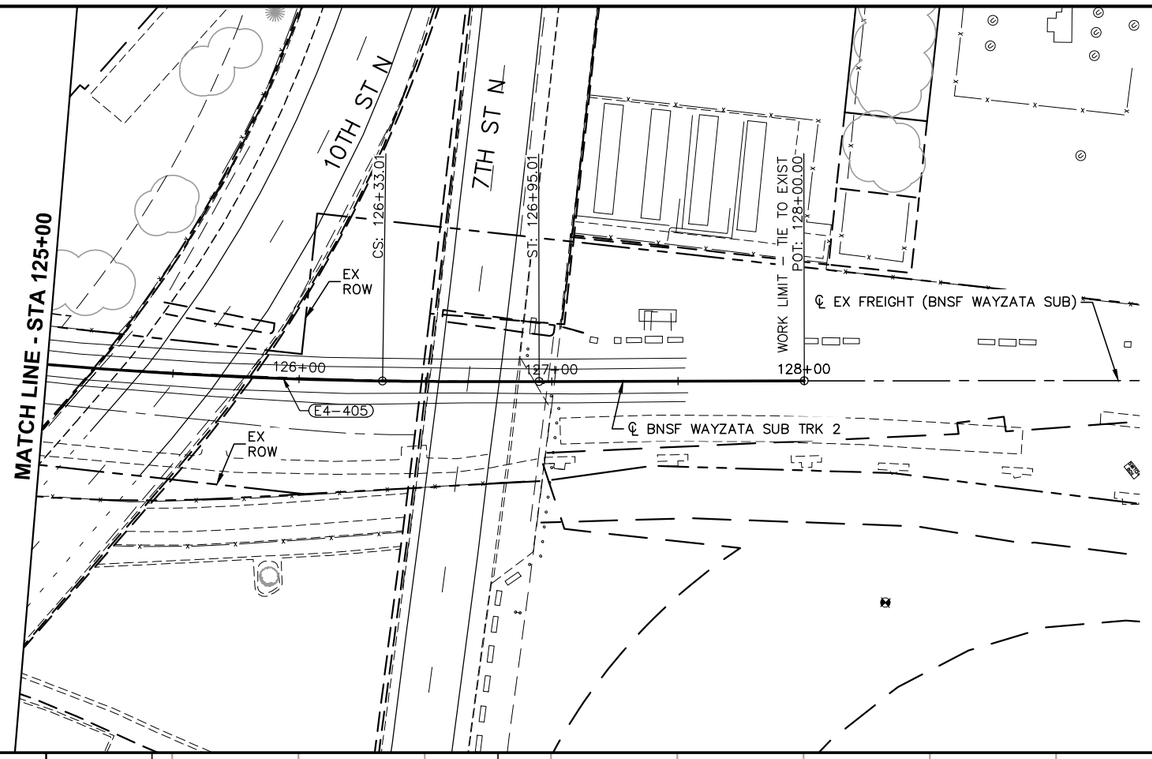

CURVE E4-405
Dc = 3° 00' 00" LH
R = 1,910.08'
Lc = 138.27'
Ls = 62.00'
Ea = 0.50"
Eu = 0.81"
V = 25 MPH

0 5 10 20
VERTICAL
0 15 30 60
HORIZONTAL
SCALE IN FEET

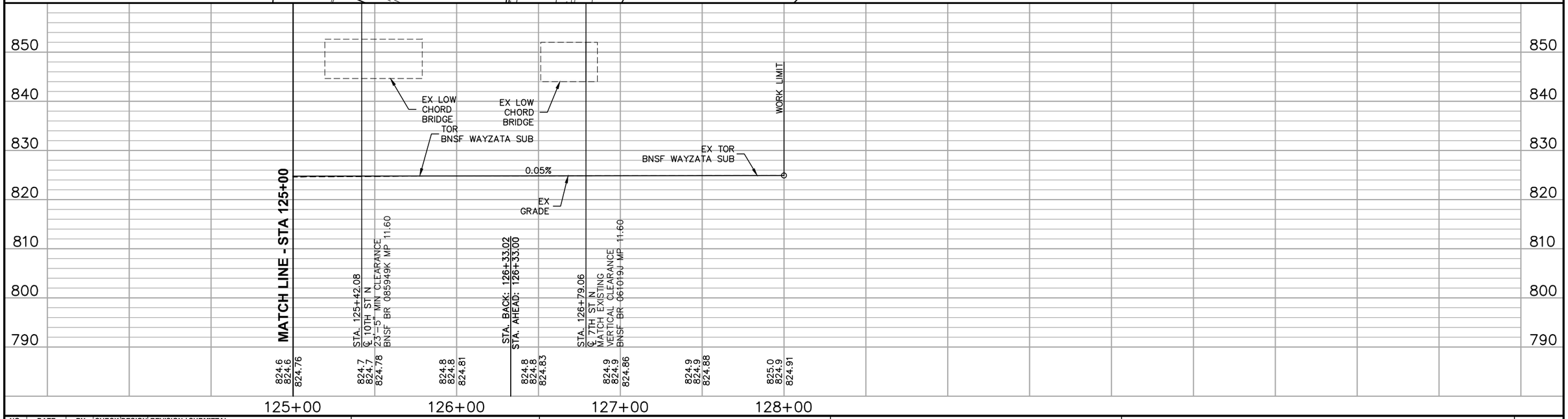

NO.	DATE	BY	CHECK	DESIGN	REVISION / SUBMITTAL

AECOM

90% SUBMISSION - 01/22/16

METROPOLITAN COUNCIL

SOUTHWEST Green Line LRT Extension

CIVIL - VOLUME 3B
FREIGHT
PLAN AND PROFILE
STA 125+00 TO STA 128+00

DISCIPLINE: TRACK

SHEET NAME: E4-FRT-PRF-006

SHEET 387 OF 420

Jan, 18 2016 11:37 am V:\3400_ADC\CAD\00_EAST\PLANSHEETS\TRACK\E4-FRT-PRF.dwg By: V-BurrellM

TMP-EXCELSIOR TRACK ALIGNMENT

DESCRIPTION	POINT DESC.	STATIONING	COORDINATES		SPIRAL AND CURVE DATA / EQUATIONS				TANGENT	
			NORTHING	EASTING					DISTANCE	BEARING
TIE IN	PC	41+76.20	148095.3520	495579.8522	I =	1° 00' 00'' Right	Ea =	0.00''		
EXCELSIOR_TMP -1	PI	42+26+21	148115.5946	495625.5734	Rc =	5729.65'	Eu =	0.44"		
	PT	42+76.20	148135.0361	495671.6410	Lc =	100.00'	V =	25 MPH		
TRACK AHEAD									156.83'	N 67° 07' 09'' E
EXCELSIOR_TMP -2	PC	44+33.03	148196.0134	495816.1290	I =	2° 43' 38'' Right	Ea =	0.00''		
	PI	45+01.23	148222.5282	495878.9570	Rc =	2864.93'	Eu =	0.88"		
	PT	45+69.39	148252.0023	495940.4522	Lc =	136.36	V =	25 MPH		
TRACK AHEAD									381.25'	N 64° 23' 31'' E
EXCELSIOR_TMP -3	PC	49+50.64	148416.7844	496284.2567	I =	3° 10' 19'' Right	Ea =	0.00''		
	PI	50+03.53	148439.6414	496331.9459	Rc =	1910.08'	Eu =	1.31"		
	PT	50+56.38	148465.1021	496378.2975	Lc =	105.74'	V =	25 MPH		
TRACK AHEAD									110.06'	N 61° 13' 13'' E
EXCELSIOR_TMP -4	PC	51+66.44	148518.0900	496474.7626	I =	3° 00' 00'' Left	Ea =	0.00''		
	PI	52+21.00	148544.3592	496522.5860	Rc =	2083.68'	Eu =	1.20"		
	PT	52+75.53	148568.0895	496571.7186	Lc =	109.09'	V =	25 MPH		
TRACK AHEAD									399.29'	N 64° 13' 13'' E
EXCELSIOR_TMP -5	PC	56+74.81	148741.7445	496931.2645	I =	2° 00' 00'' Left	Ea =	0.00''		
	PI	57+24.82	148763.4935	496976.2949	Rc =	2864.9344	Eu =	0.88"		
	PT	57+74.81	148783.6577	497022.0570	Lc =	100.00'	V =	25 MPH		
TRACK AHEAD									130.26'	N 66° 13' 13'' E
EXCELSIOR_TMP -6	PC	59+05.08	148836.1802	497141.2551	I =	1° 49' 43'' Right	Ea =	0.00''		
	PI	59+57.33	148857.2502	497189.0729	Rc =	3274.17'	Eu =	0.77"		
	PT	60+09.57	148879.8354	497236.1940	Lc =	104.49'	V =	25 MPH		
TRACK AHEAD									915.90'	N 64° 23' 29'' E
EXCELSIOR_TMP -7	PC	69+25.48	149275.7061	498062.1261	I =	4° 00' 00'' Right	Ea =	0.00''		
	PI	69+92.18	149304.5357	498122.2753	Rc =	1910.08'	Eu =	1.31"		
	PT	70+58.80	149337.4909	498180.2670	Lc =	133.32'	V =	25 MPH		
TRACK AHEAD									111.28'	N 60° 23' 29'' E
EXCELSIOR_TMP -8	PC	71+70.09	149392.4706	498277.0153	I =	4° 00' 31'' Left	Ea =	0.00''		
	PI	72+36.93	149425.4957	498335.1300	Rc =	1910.08'	Eu =	1.31"		
TIE IN	PT	73+03.71	149454.3775	498395.4111	Lc =	133.62'	V =	25 MPH		

NOTE:
1. FOR DEGREE OF CURVE, SEE E1-FRT-TMP-EXCELSIOR-005 TO -009.

Jan, 18 2016 10:29 am V:\3400_ADC\CAD\00_EAST\PLANSHEETS\TRACK\E1-FRT-TMP-ALG.dwg By: V-RaboodV

NO.	DATE	BY	CHECK	DESIGN	REVISION / SUBMITTAL

AECOM

90% SUBMISSION - 01/22/16

METROPOLITAN COUNCIL

SOUTHWEST Green Line LRT Extension

CIVIL - VOLUME 3B
TEMPORARY FREIGHT EXCELSIOR ALIGNMENT DATA

DISCIPLINE: TRACK

SHEET NAME: E1-FRT-TMP-EXCELSIOR - 001

SHEET 388 OF 420

NOTE:
1. FOR DITCH INVERT AND DETAILS, SEE DRAINAGE PLANS

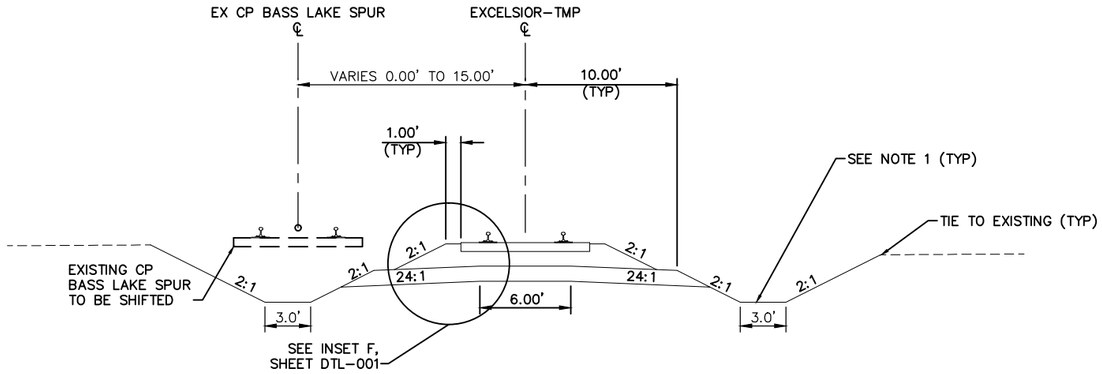

TYPICAL SECTION
STA 41+76.21 TO STA 43+27.75

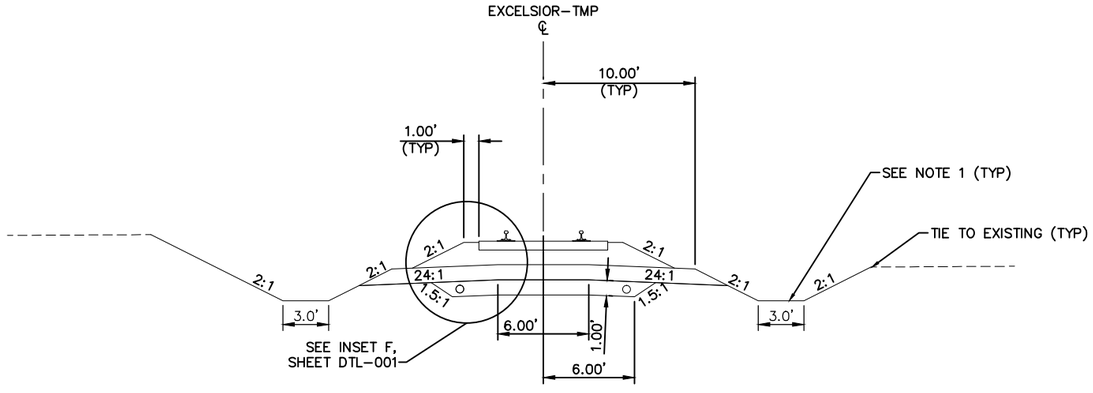

TYPICAL SECTION
STA 43+27.75 TO STA 51+57.26

0 2.5 5 10
SCALE IN FEET

NO.	DATE	BY	CHECK	DESIGN	REVISION / SUBMITTAL

AECOM

90% SUBMISSION - 01/22/16

METROPOLITAN COUNCIL

SOUTHWEST Green Line LRT Extension

CIVIL - VOLUME 3B
TEMPORARY FREIGHT EXCELSIOR
TYPICAL SECTIONS

DISCIPLINE: TRACK

SHEET NAME: E1-FRT-TMP-EXCELSIOR - 002

SHEET 389 OF 420

Jan. 18 2016 10:30 am V:\3400_ADC\CAD\00_EAST\PLANSHEETS\TRACK\E1-FRT-TMP-TYP.dwg By: V-RaboodV

NOTE:
1. FOR DITCH INVERT AND DETAILS, SEE DRAINAGE PLANS.
2. LIMITS OF EXCELSIOR BLVD AT–GRADE CROSSING NOT ILLUSTRATED.

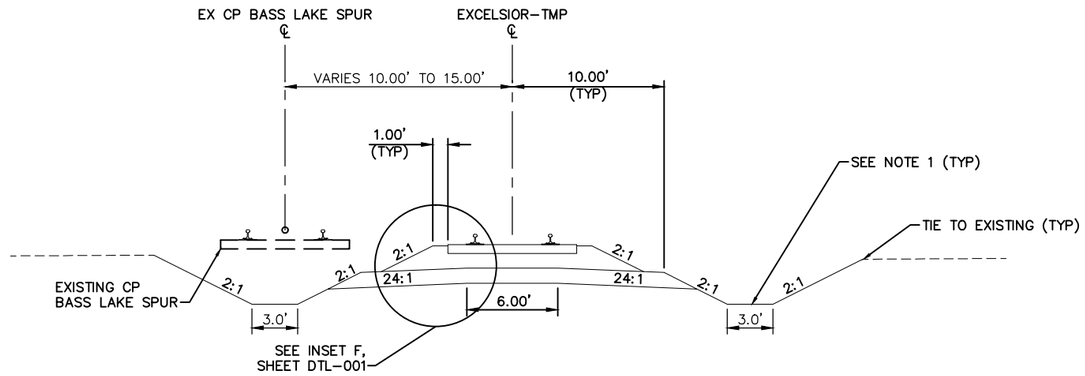

TYPICAL SECTION
STA 51+57.26 TO STA 58+81.93
SEE NOTE 2

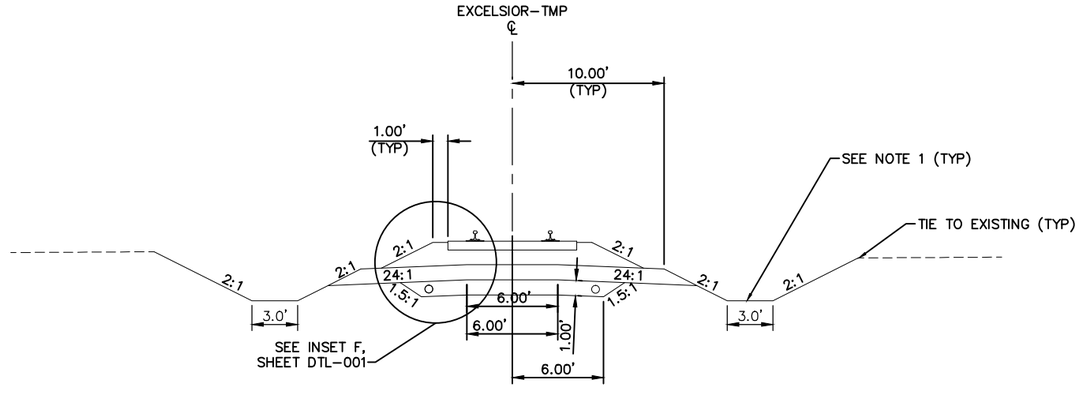

TYPICAL SECTION
STA 58+81.93 TO STA 70+18.39

0 2.5 5 10
SCALE IN FEET

NO.	DATE	BY	CHECK	DESIGN	REVISION / SUBMITTAL

AECOM

90% SUBMISSION - 01/22/16

METROPOLITAN COUNCIL

SOUTHWEST Green Line LRT Extension

CIVIL - VOLUME 3B
TEMPORARY FREIGHT EXCELSIOR
TYPICAL SECTIONS

DISCIPLINE: TRACK

SHEET NAME: E1-FRT-TMP-EXCELSIOR - 003

SHEET 390 OF 420

Jan. 18 2016 10:30 am V:\3400_ADC\CAD\00_EAST\PLANSHEETS\TRACK\E1-FRT-TMP-TYP.dwg By: V-RaboodV

NOTE:
1. FOR DITCH INVERT AND DETAILS, SEE DRAINAGE PLANS

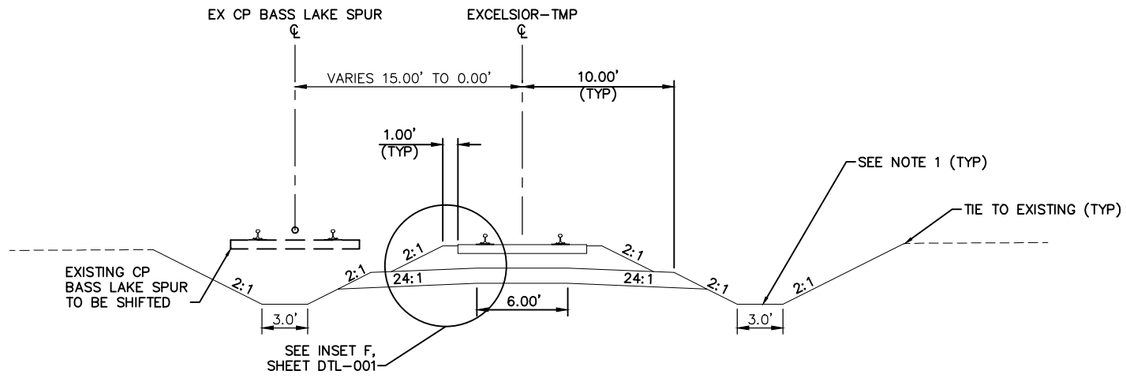

TYPICAL SECTION
STA 70+18.39 TO STA 73+03.71

0 2.5 5 10
SCALE IN FEET

NO.	DATE	BY	CHECK	DESIGN	REVISION / SUBMITTAL

AECOM

90% SUBMISSION - 01/22/16

METROPOLITAN COUNCIL

SOUTHWEST Green Line LRT Extension

CIVIL - VOLUME 3B
TEMPORARY FREIGHT EXCELSIOR
TYPICAL SECTIONS

DISCIPLINE: TRACK

SHEET NAME: E1-FRT-TMP-EXCELSIOR - 004

SHEET 391 OF 420

Jan, 18 2016 10:30 am v:\3400_ADC\CAD\00_EAST\PLANSHEETS\TRACK\E1-FRT-TMP-TYP.dwg By: V-RaboodV

CURVE EXCELSIOR_TMP–1
Dc = 1° 00' 00" RH
R = 5,729.65'
Lc = 100.00'
Ea = 0.00"
Eu = 0.44"
V = 25 MPH

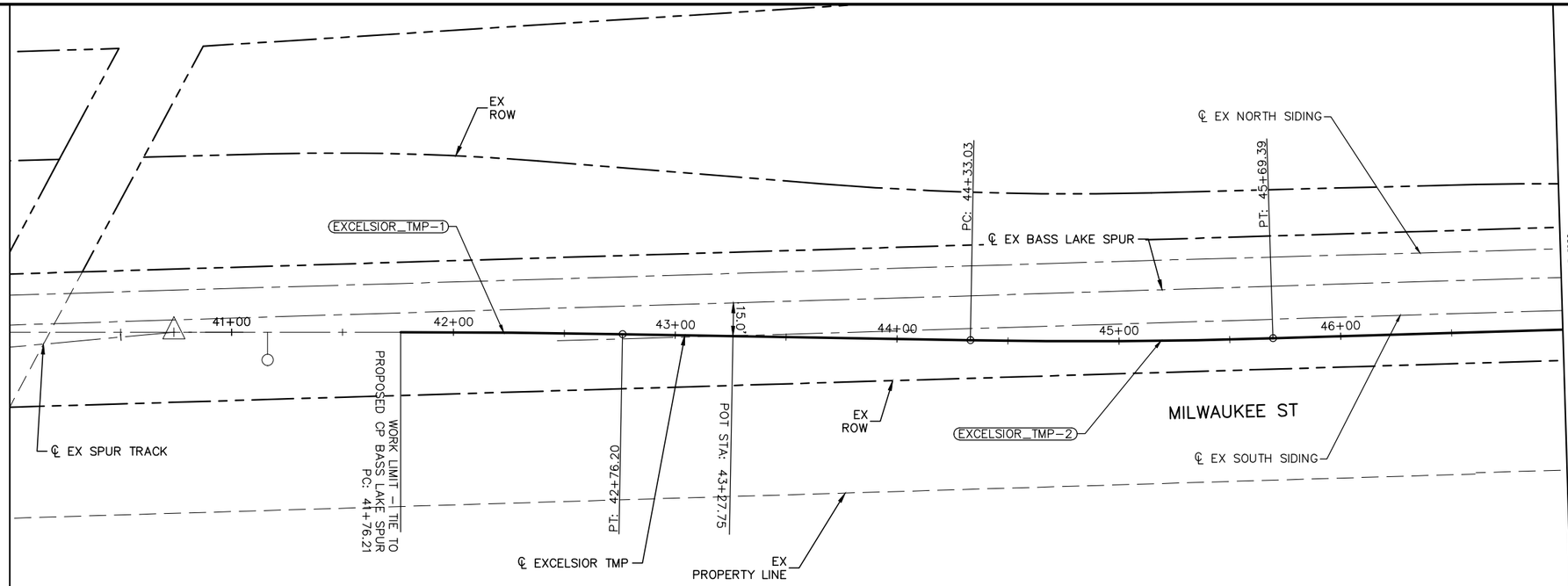

CURVE EXCELSIOR_TMP–2
Dc = 2° 00' 00" LH
R = 2,864.93
Lc = 136.36'
Ea = 0.00"
Eu = 0.88"
V = 25 MPH

0 5 10 20
VERTICAL
0 15 30 60
HORIZONTAL
SCALE IN FEET

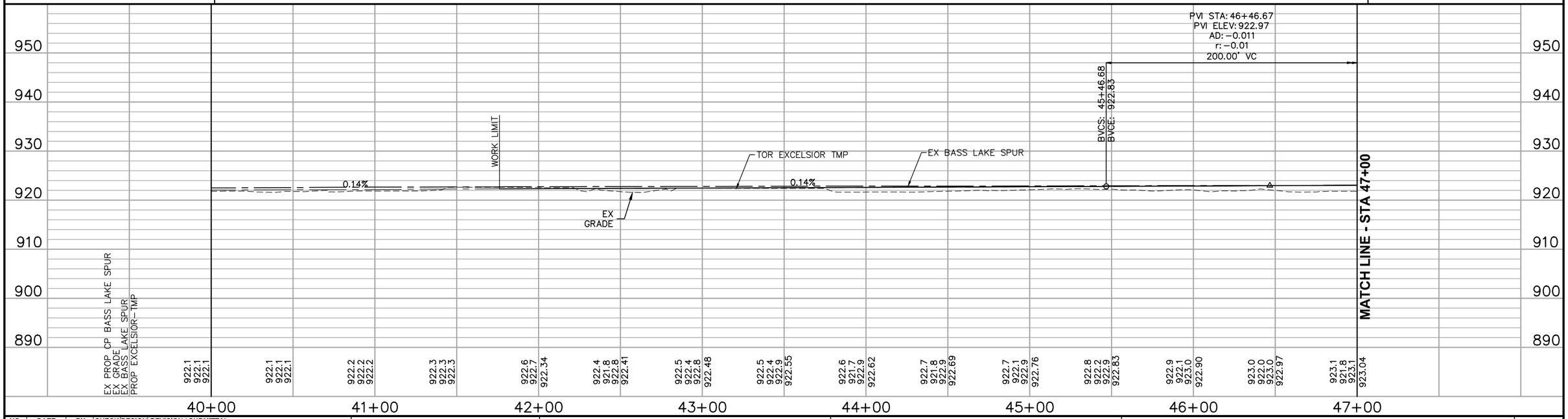

NO.	DATE	BY	CHECK	DESIGN	REVISION / SUBMITTAL

AECOM

90% SUBMISSION - 01/22/16

METROPOLITAN COUNCIL

SOUTHWEST Green Line LRT Extension

CIVIL - VOLUME 3B
TEMPORARY FREIGHT EXCELSIOR
PLAN AND PROFILE
STA 41+76.21 TO STA 47+00

DISCIPLINE: TRACK

SHEET NAME: E1-FRT-TMP-EXCELSIOR - 005

SHEET 392 OF 420

Jan, 18 2016 10:33 am V:\3400_ADC\CAD\00_EAST\PLANSHEETS\TRACK\E1-FRT-TMP-PRF.dwg By: V-RaboodV

CURVE EXCELSIOR_TMP-3
Dc = 3° 00' 00" RH
R = 1,910.08'
Lc = 105.74'
Ea = 0.00"
Eu = 1.31"
V = 25 MPH

CURVE EXCELSIOR_TMP-4
Dc = 2° 45' 00" RH
R = 2,083.68'
Lc = 109.09'
Ea = 0.00"
Eu = 1.20"
V = 25 MPH

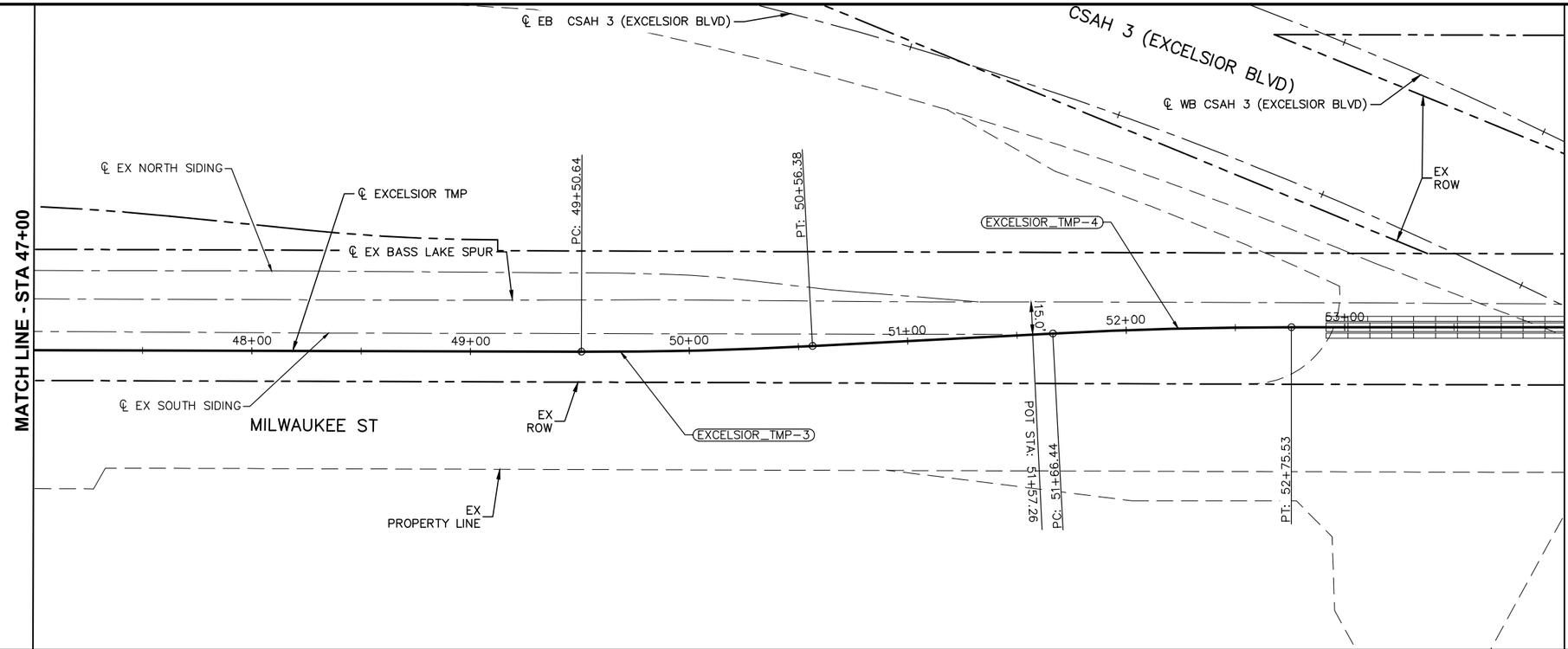

0 5 10 20
VERTICAL
0 15 30 60
HORIZONTAL
SCALE IN FEET

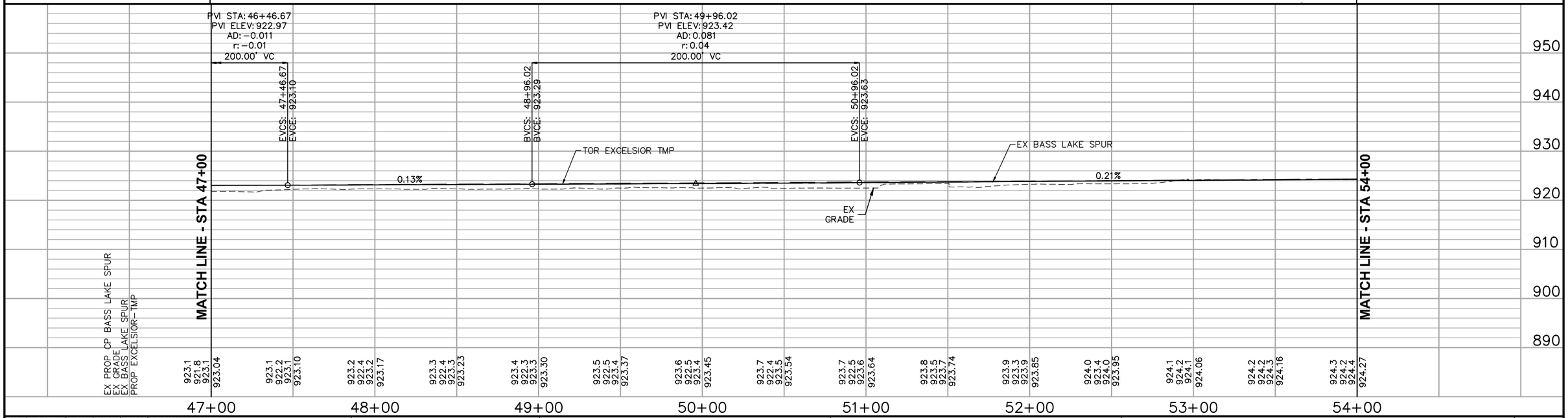

NO.	DATE	BY	CHECK	DESIGN	REVISION / SUBMITTAL

AECOM

90% SUBMISSION - 01/22/16

METROPOLITAN COUNCIL

SOUTHWEST Green Line LRT Extension

CIVIL - VOLUME 3B
TEMPORARY FREIGHT EXCELSIOR
PLAN AND PROFILE
STA 47+00 TO STA 54+00

DISCIPLINE: TRACK

SHEET NAME: E1-FRT-TMP-EXCELSIOR - 006

SHEET 393 OF 420

Jan, 18 2016 10:33 am V:\3400_ADC\CAD\00_EAST\PLANSHEETS\TRACK\E1-FRT-TMP-PRF.dwg By: V-RaboodV

CURVE EXCELSIOR_TMP-5
Dc = 2° 00' 00" LH
R = 2,864.93'
Lc = 100.00'
Ea = 0.00"
Eu = 0.88"
V = 25 MPH

CURVE EXCELSIOR_TMP-6
Dc = 1° 45' 00" LH
R = 3,274.17'
Lc = 104.49'
Ea = 0.00"
Eu = 0.77"
V = 25 MPH

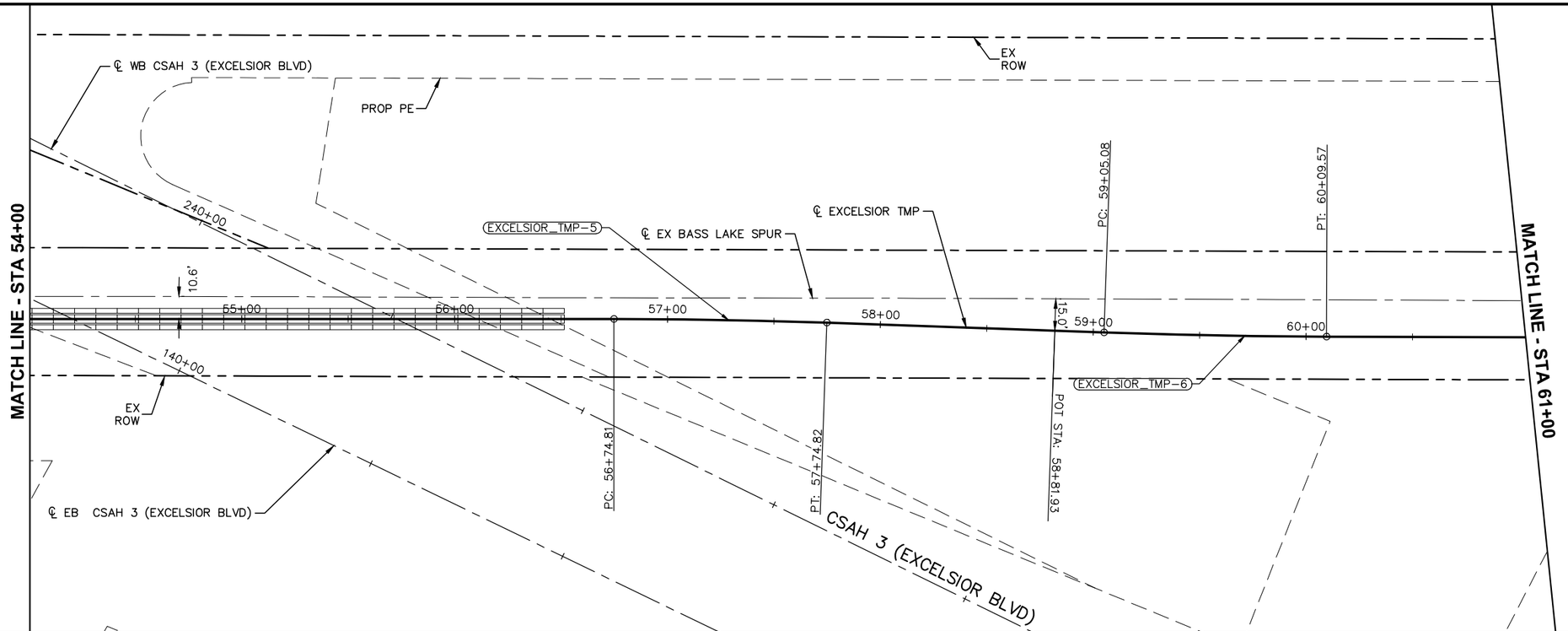

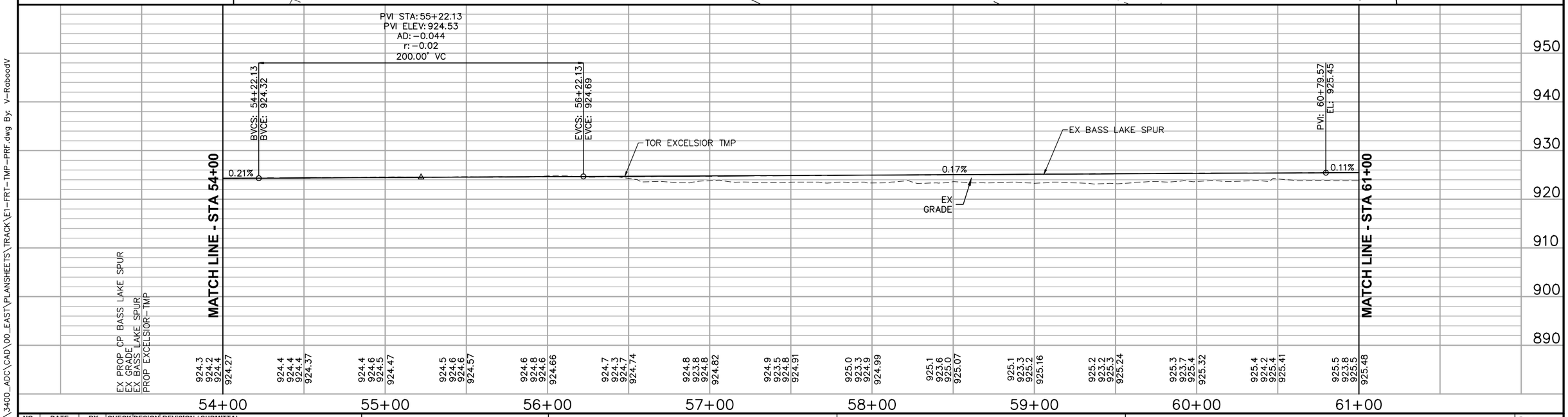

NO.	DATE	BY	CHECK	DESIGN	REVISION / SUBMITTAL

AECOM

90% SUBMISSION - 01/22/16

METROPOLITAN COUNCIL

SOUTHWEST Green Line LRT Extension

CIVIL - VOLUME 3B
TEMPORARY FREIGHT EXCELSIOR
PLAN AND PROFILE
STA 54+00 TO STA 61+00

DISCIPLINE: TRACK

SHEET NAME: E1-FRT-TMP-EXCELSIOR - 007

SHEET 394 OF 420

Jan, 18 2016 10:33 am V:\3400_ADC\CAD\00_EAST\PLANSHEETS\TRACK\E1-FRT-TMP-PRF.dwg By: V-RaboodV

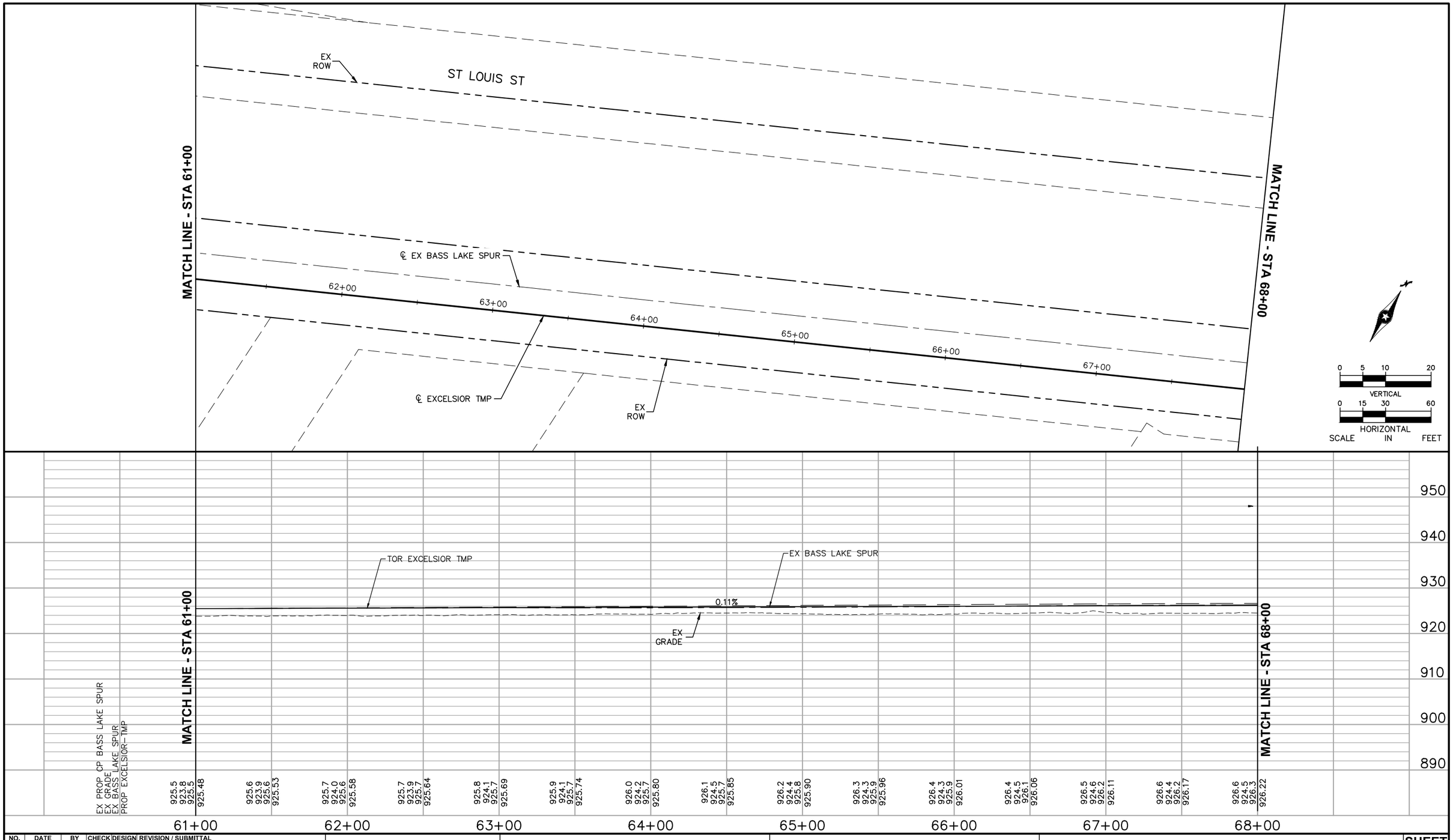

NO.	DATE	BY	CHECK	DESIGN	REVISION / SUBMITTAL

AECOM

90% SUBMISSION - 01/22/16

METROPOLITAN COUNCIL

SOUTHWEST Green Line LRT Extension

CIVIL - VOLUME 3B
TEMPORARY FREIGHT EXCELSIOR
PLAN AND PROFILE
STA 61+00 TO STA 68+00

SHEET 395 OF 420

DISCIPLINE: TRACK

SHEET NAME: E1-FRT-TMP-EXCELSIOR - 008

Jan. 18 2016 10:33 am V:\3400_ADC\CAD\00_EAST\PLANSHEETS\TRACK\E1-FRT-TMP-PRF.dwg By: V-RaboodV

CURVE EXCELSIOR_TMP–7
Dc = 3° 00' 00.00" RH
R = 1,910.08'
Lc = 133.32'
Ea = 0.00"
Eu = 1.31"
V = 25 MPH

CURVE EXCELSIOR_TMP–8
Dc = 3° 00' 00" RH
R = 1,910.08'
Lc = 133.62'
Ea = 0.00"
Eu = 1.31"
V = 25 MPH

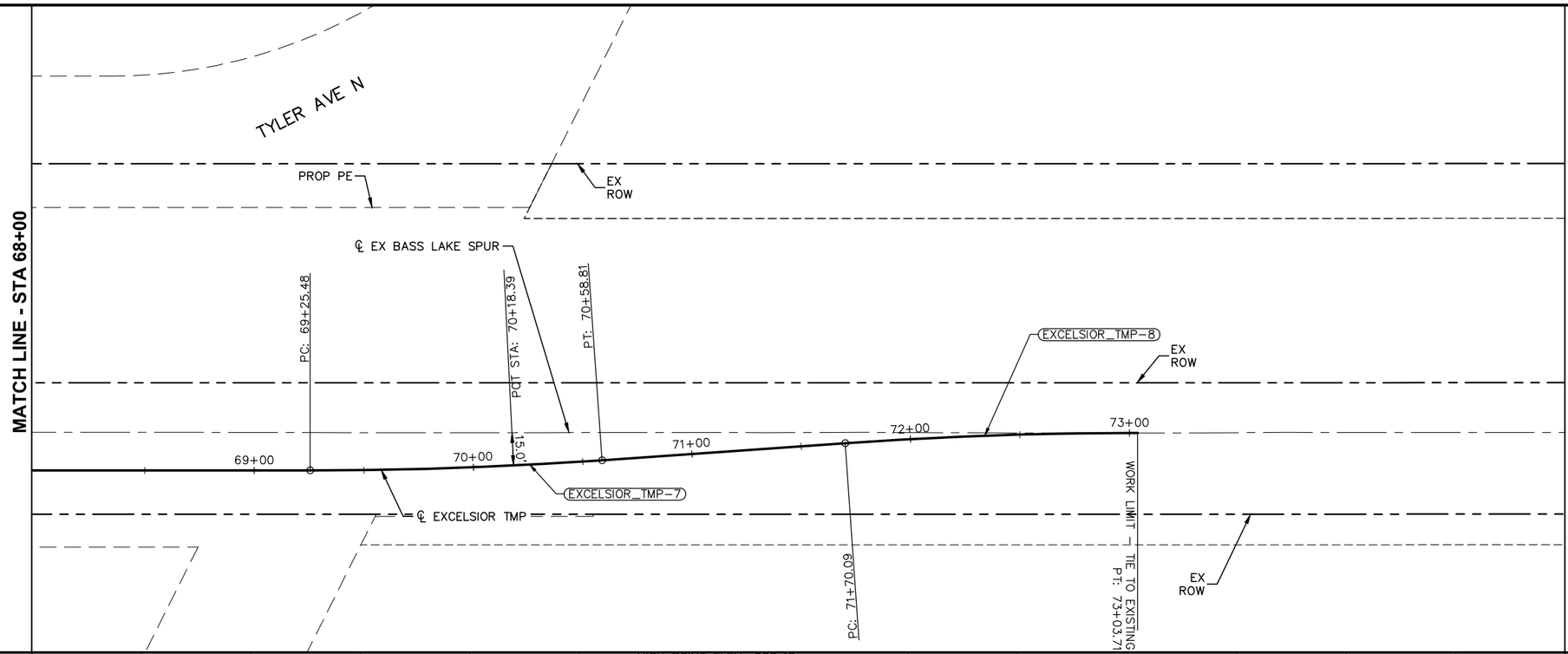

HIGH POINT ELEV: 926.49
HIGH POINT STA: 70+92.40
PVI STA: 71+12.49
PVI ELEV: 926.55
AD: –0.27
200.00' VC

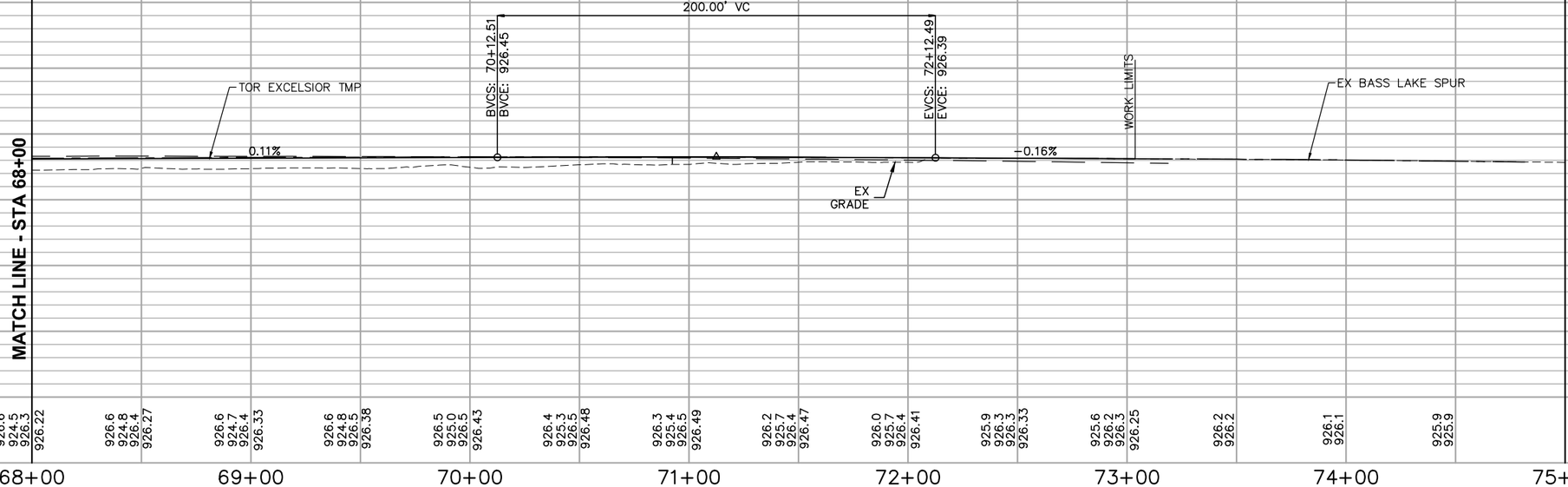

EX PROP CP BASS LAKE SPUR
EX GRADE
EX BASS LAKE SPUR
PROP EXCELSIOR–TMP

926.6	926.6	926.22
924.5	924.8	
926.3	926.4	
	926.27	
926.6	926.6	926.33
924.7	924.8	
926.4	926.5	
	926.38	
926.5	926.5	926.43
925.0	926.5	
926.5	926.48	
926.4	926.49	
925.3	925.4	
926.5	926.5	
926.3	926.47	
925.4	925.7	
926.5	926.4	
926.2	926.41	
925.7	925.9	
926.4	926.3	
926.0	926.3	926.33
925.7	926.3	
926.4	926.2	
926.2	926.25	
925.6	926.2	
926.3	926.3	
926.2	926.2	
926.2		
926.1	926.1	
925.9	925.9	

68+00 69+00 70+00 71+00 72+00 73+00 74+00 75+00

NO.	DATE	BY	CHECK	DESIGN	REVISION / SUBMITTAL

AECOM

90% SUBMISSION - 01/22/16

METROPOLITAN COUNCIL

SOUTHWEST Green Line LRT Extension

CIVIL - VOLUME 3B
TEMPORARY FREIGHT EXCELSIOR PLAN AND PROFILE STA 68+00 TO STA 73+03.71

DISCIPLINE: TRACK

SHEET NAME: E1-FRT-TMP-EXCELSIOR - 009

SHEET 396 OF 420

Jan. 18 2016 10:33 am V:\3400_ADC\CAD\00_EAST\PLANSHEETS\TRACK\E1-FRT-TMP-PRF.dwg By: V-RaboodV

TMP-WOODDALE TRACK ALIGNMENT

DESCRIPTION	POINT DESC.	STATIONING	COORDINATES		SPIRAL AND CURVE DATA / EQUATIONS				TANGENT	
			NORTHING	EASTING					DISTANCE	BEARING

0 2.5 5 10
SCALE IN FEET

NO.	DATE	BY	CHECK	DESIGN	REVISION / SUBMITTAL

AECOM

90% SUBMISSION - 01/22/16

METROPOLITAN COUNCIL

SOUTHWEST
Green Line LRT Extension

CIVIL - VOLUME 3B
FREIGHT
TYPICAL SECTIONS

DISCIPLINE: TRACK

SHEET NAME: E2-FRT-TMP-WOODDALE - 002

SHEET 398 OF 420

Jan, 18 2016 10:35 am V:\3400_ADC\CAD\00_EAST\PLANSHEETS\TRACK\E2-FRT-TMP-TYP.dwg By: V-RaboodV

CURVE NO. WOODDALE–TMP–1
Dc = 2–10–00
R = 2644.58'
Lc = 227.58'
Ls = 31.00'
Ea = 0.50"
Eu = 0.45"
V = 25 MPH

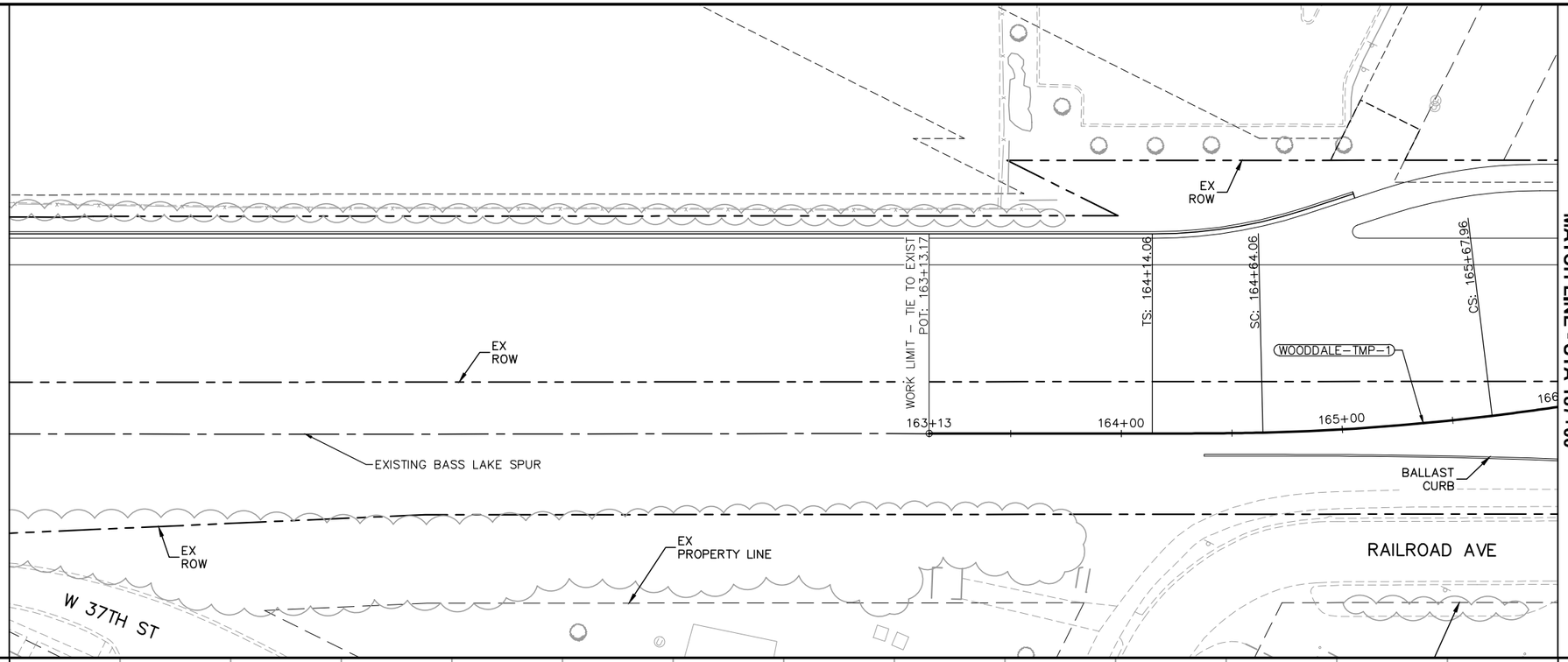

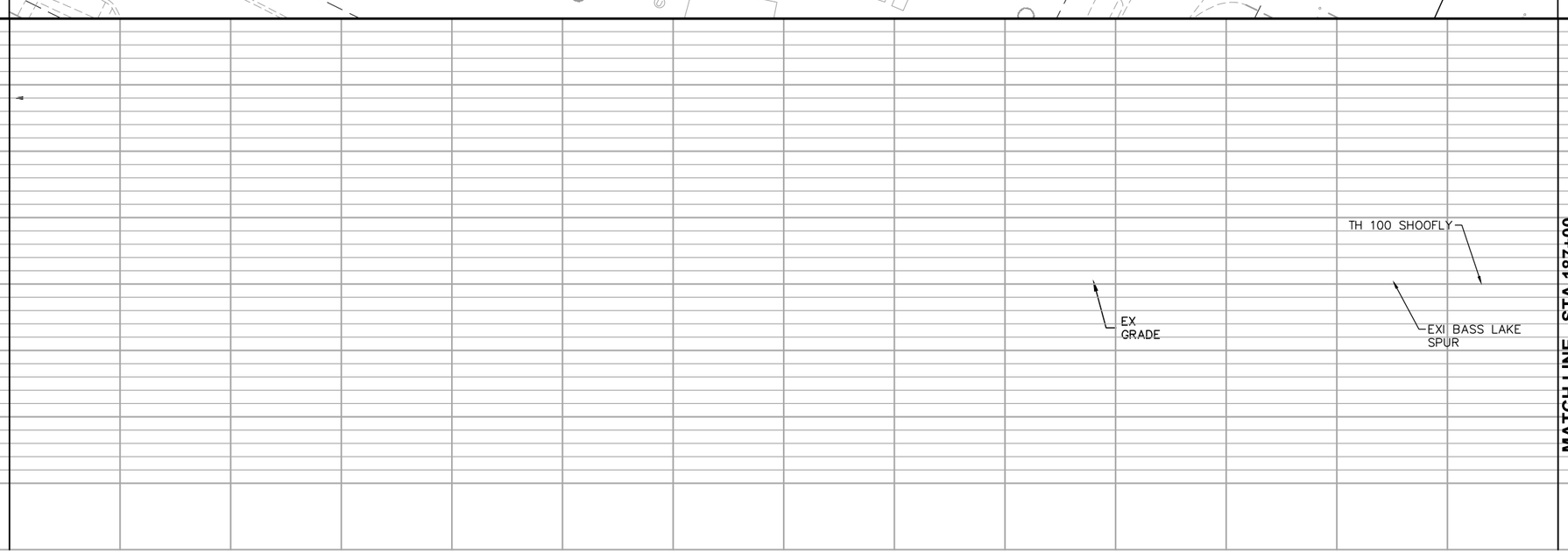

NO.	DATE	BY	CHECK	DESIGN	REVISION / SUBMITTAL

AECOM

90% SUBMISSION - 01/22/16

METROPOLITAN COUNCIL

SOUTHWEST Green Line LRT Extension

CIVIL - VOLUME 3B
TEMPORARY FREIGHT WOODDALE
PLAN AND PROFILE
STA 183+30.67 TO STA 187+00

DISCIPLINE: TRACK

SHEET NAME: E2-FRT-TMP-WOODDALE- 003

SHEET 399 OF 420

Jan. 18 2016 10:39 am V:\3400_ADC\CAD\00_EAST\PLANSHEETS\TRACK\E2-FRT-TMP-PRF.dwg By: V-RaboodV

MINNESOTA 7 SERVICE RD

WOODDALE AVE S

RAILROAD AVE

MATCH LINE - STA 187+00

MATCH LINE - STA 194+00

ST: 166+17.96

TS: 167+31.79

SC: 167+81.79

CS: 168+86.06

ST: 169+36.06

+00

167+00

168+00

169+00

169+36

WOODDALE-TMP-2

EX ROW

CROSSING PANEL AT-GRADE CROSSING

PROPOSED BASS LAKE SPUR

WOODDALE STATION

WOODDALE S

BALLAST CURB

NEIGHBORHOOD

MERGE

℄ WOODDALE AVE S

BALLAST CURB

EX ROW

CURVE NO. WOODDALE-TMP-2
Dc = 2-15-00
R = 2546.64'
Lc = 218.64'
Ls = 31.00'
Ea = 0.50"
Eu = 0.48"
V = 25 MPH

0 5 10 20
VERTICAL
0 15 30 60
HORIZONTAL
SCALE IN FEET

EX BASS LAKE SPUR

TH 100 SHOOFLY

LOW CHORD BRIDGE

EX GRADE

MATCH LINE - STA 187+00

MATCH LINE - STA 194+00

EX GRADE
EX TOR
PROP TOR

NO.	DATE	BY	CHECK	DESIGN	REVISION / SUBMITTAL

AECOM

90% SUBMISSION - 01/22/16

METROPOLITAN COUNCIL

SOUTHWEST Green Line LRT Extension

CIVIL - VOLUME 3B
TEMPORARY FREIGHT WOODDALE
PLAN AND PROFILE
STA 187+00 TO STA 194+00

DISCIPLINE: TRACK

SHEET NAME: E2-FRT-TMP-WOODDALE - 004

SHEET 400 OF 420

Jan. 18 2016 10:39 am V:\3400_ADC\CAD\00_EAST\PLANSHEETS\TRACK\E2-FRT-TMP-PRF.dwg By: V-RaboodV

KW_TMP_A TRACK ALIGNMENT

DESCRIPTION	POINT DESC.	STATIONING	COORDINATES		SPIRAL AND CURVE DATA / EQUATIONS				TANGENT	
			NORTHING	EASTING					DISTANCE	BEARING
TIE IN	POT	315+19.95	158589.8562	516241.7939					61.26'	N 21° 48' 45'' E
	TS	315+81.21	158646.7277	516264.5552	Ls1 =	31.00'	Dc =	3° 00' 00''		
CURVE KW_TMP_A-1	SC	316+12.21	158675.4769	516276.1516	I =	14° 55' 52'' Right	Ea =	0.00"		
	PI	318+46.76	158892.5196	516365.0670	Rc =	1910.08'	Eu =	0.21"		
	CS	320+78.92	159081.6016	516503.8529	Lc =	466.71'	V =	10 MPH		
	ST	321+09.92	159106.4925	516522.3308	Ls2 =	31.00'				
TRACK AHEAD									294.93'	N 36°44' 37'' E
CURVE KW_TMP_A-2	TS	324+04.85	159342.8264	516698.7684	Ls1 =	31.00'	Dc =	5° 15' 00''		
	SC	324+35.85	159367.5791	516717.4308	I =	8° 20' 44'' Right	Ea =	0.00"		
	PI	324+99.93	159418.3812	516756.4930	Rc =	1091.73'	Eu =	0.37"		
	CS	325+63.82	159464.2644	516801.2306	Lc =	127.98'	V =	10 MPH		
	ST	325+94.82	159486.2540	516823.0810	Ls2 =	31.00'				
TRACK AHEAD									105.84'	N 45°05' 21'' E
CURVE KW_TMP_A-3	TS	327+00.67	159560.9802	516898.0403	Ls1 =	31.00'	Dc =	3° 05' 00''		
	SC	327+31.67	159582.9272	516919.9337	I =	5° 16' 33'' Left	Ea =	0.00"		
	PI	328+01.76	159632.8282	516969.1622	Rc =	1858.47'	Eu =	0.22"		
	CS	328+71.78	159686.2957	517014.4920	Lc =	140.11'	V =	10 MPH		
	ST	329+02.78	159710.0525	517034.4071	Ls2 =	31.00'				
TRACK AHEAD									28.92'	N 39° 48' 48'' E
TIE IN	POT	329+31.70	159732.2693	517052.9262						

Jan, 18 2016 10:42 am v:\3400_ADC\CAD\00_EAST\PLANSHEETS\TRACK\E3-FRT-TMP-ALG.dwg By: V-RaboodV

NO.	DATE	BY	CHECK	DESIGN	REVISION / SUBMITTAL

AECOM

90% SUBMISSION - 01/22/16

METROPOLITAN COUNCIL

SOUTHWEST Green Line LRT Extension

CIVIL - VOLUME 3B
TEMPORARY FREIGHT KW_TMP_A
ALIGNMENT DATA

DISCIPLINE: TRACK

SHEET NAME: E3-TRK-KW_TMP_A - 001

SHEET 401 OF 420

NOTE:
1. FOR DITCH INVERT AND DETAILS, SEE DRAINAGE PLANS.
2. LIMITS OF CEDAR LAKE PKWY AT-GRADE CROSSING NOT ILLUSTRATED.

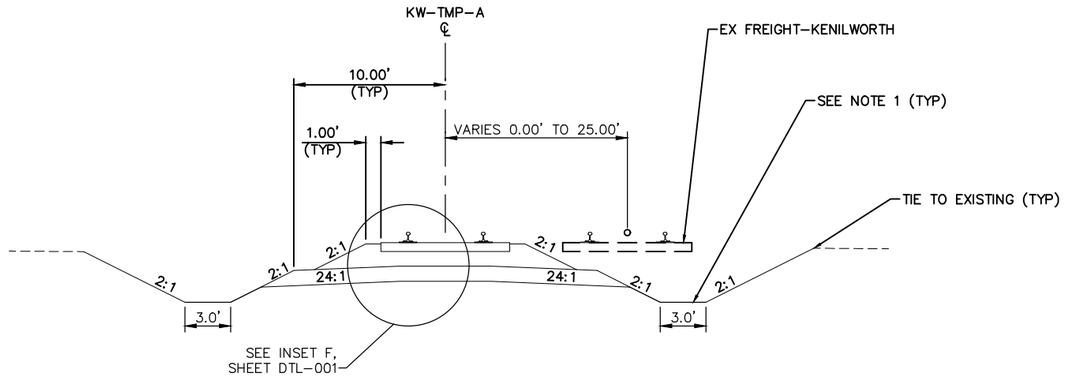

TYPICAL SECTION
STA 315+19.95 TO 329+31.70

0 2.5 5 10
SCALE IN FEET

NO.	DATE	BY	CHECK	DESIGN	REVISION / SUBMITTAL

AECOM

90% SUBMISSION - 01/22/16

METROPOLITAN COUNCIL

SOUTHWEST Green Line LRT Extension

CIVIL - VOLUME 3B
TEMPORARY FREIGHT KW_TMP_A
TYPICAL SECTIONS

DISCIPLINE: TRACK

SHEET NAME: E3-FRT-KW_TMP_A - 002

SHEET 402 OF 420

Jan. 18 2016 10:44 am V:\3400_ADC\CAD\00_EAST\PLANSHEETS\TRACK\E3-FRT-TMP-TYP.dwg By: V-RaboodV

CURVE KW_TMP_A-1
Dc = 3° 00' 00" RH
R = 1,910.08'
Lc = 466.71'
Ls = 31.00'
Ea = 0.00"
Eu = 0.21"
V = 10 MPH

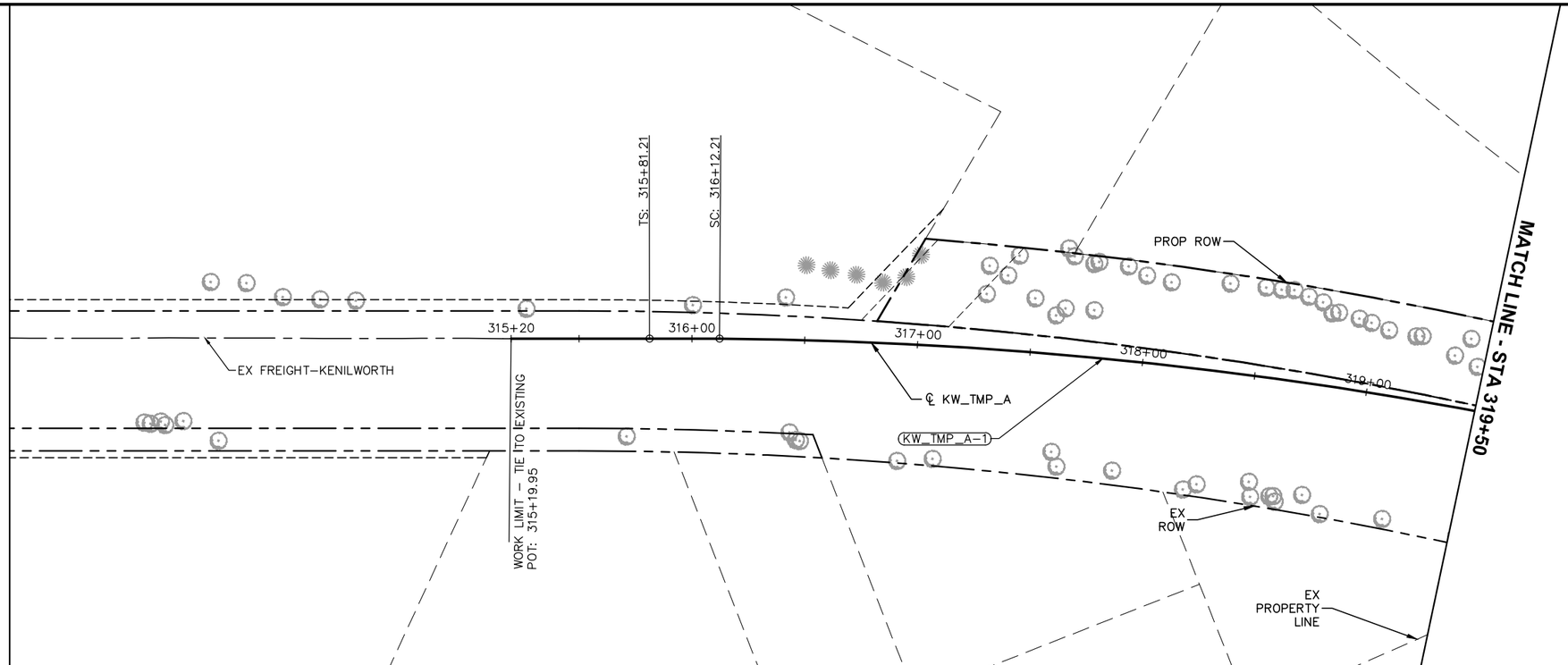

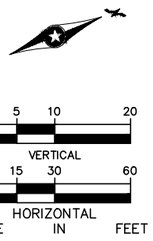

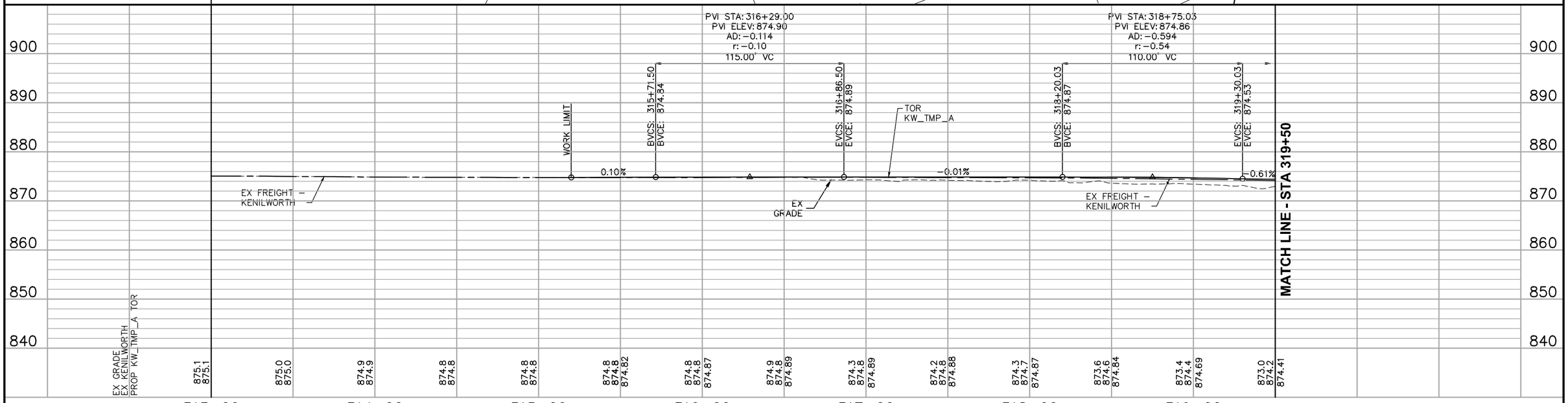

NO.	DATE	BY	CHECK	DESIGN	REVISION / SUBMITTAL

AECOM

90% SUBMISSION - 01/22/16

METROPOLITAN COUNCIL

SOUTHWEST Green Line LRT Extension

CIVIL - VOLUME 3B
TEMPORARY FREIGHT KW_TMP_A
PLAN AND PROFILE
STA 315+19.95 TO STA 319+50

DISCIPLINE: TRACK

SHEET NAME: E3-FRT-KW_TMP_A - 003

SHEET 403 OF 420

Jan, 18 2016 10:46 am V:\3400_ADC\CAD\00_EAST\PLANSHEETS\TRACK\E3-FRT-TMP-PRF.dwg By: V-RaboodV

CURVE KW_TMP_A-2
Dc = 5° 15' 00" RH
R = 1,091.73'
Lc = 127.98'
Ls = 31.00'
Ea = 0.00"
Eu = 0.37"
V = 10 MPH

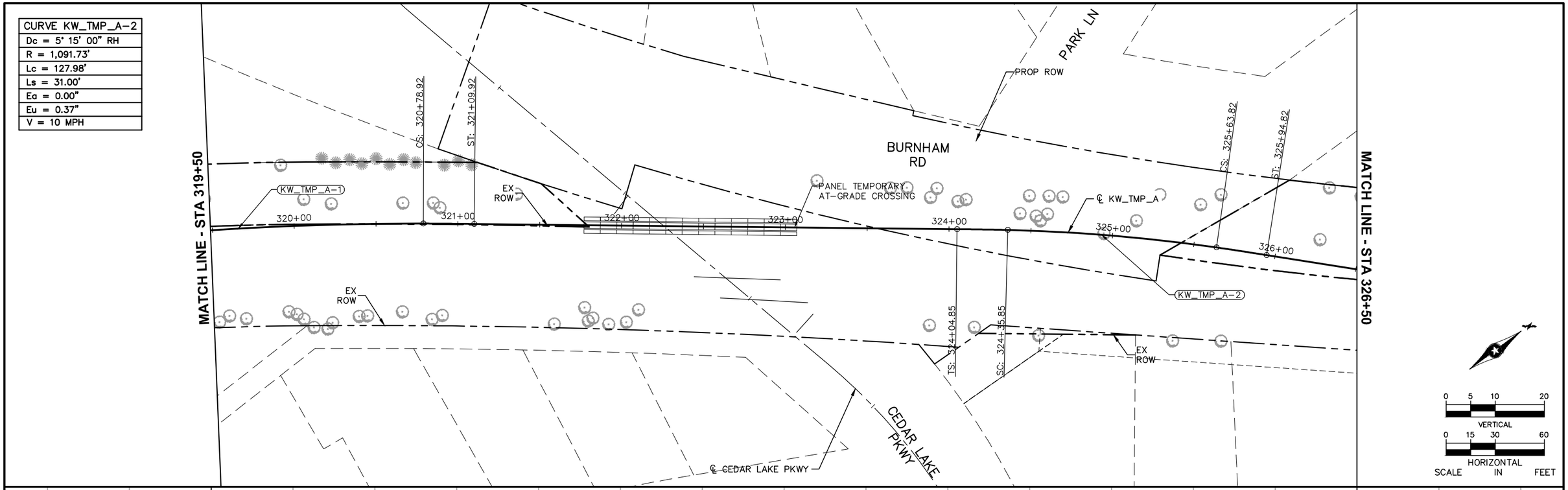

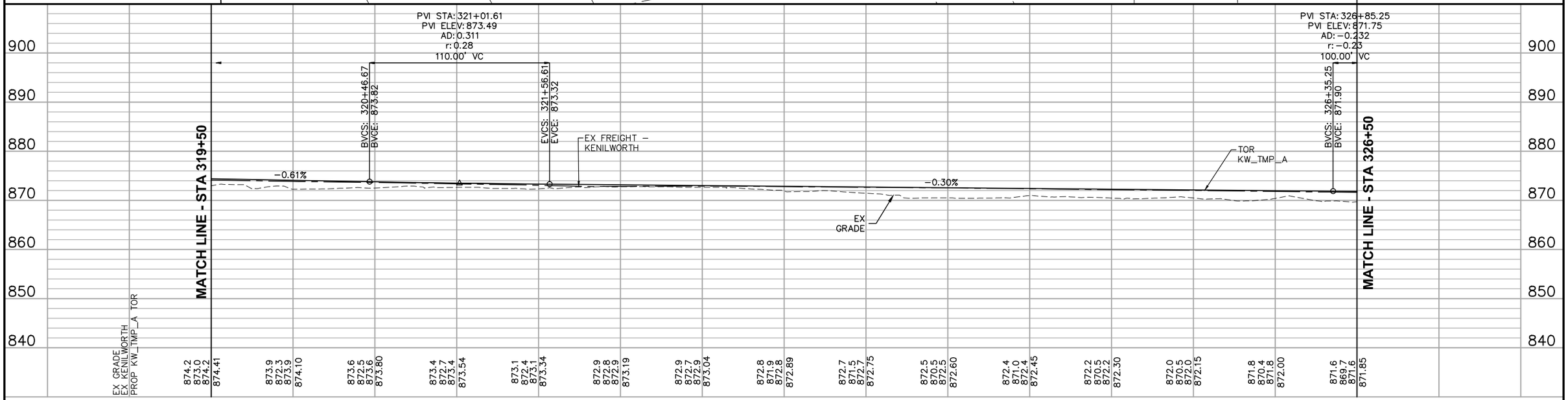

NO.	DATE	BY	CHECK	DESIGN	REVISION / SUBMITTAL

AECOM

90% SUBMISSION - 01/22/16

METROPOLITAN COUNCIL

SOUTHWEST Green Line LRT Extension

CIVIL - VOLUME 3B
TEMPORARY FREIGHT KW_TMP_A
PLAN AND PROFILE
STA 319+50 TO STA 326+50

DISCIPLINE: TRACK

SHEET NAME: E3-FRT-KW_TMP_A - 004

SHEET 404 OF 420

Jan, 18 2016 10:47 am V:\3400_ADC\CAD\00_EAST\PLANSHEETS\TRACK\E3-FRT-TMP-PRF.dwg By: V-RaboodV

CURVE KW_TMP_A-3
Dc = 3° 05' 00" LH
R = 1,858.47'
Lc = 140.11'
Ls = 31.00'
Ea = 0.00"
Eu = 0.22"
V = 10 MPH

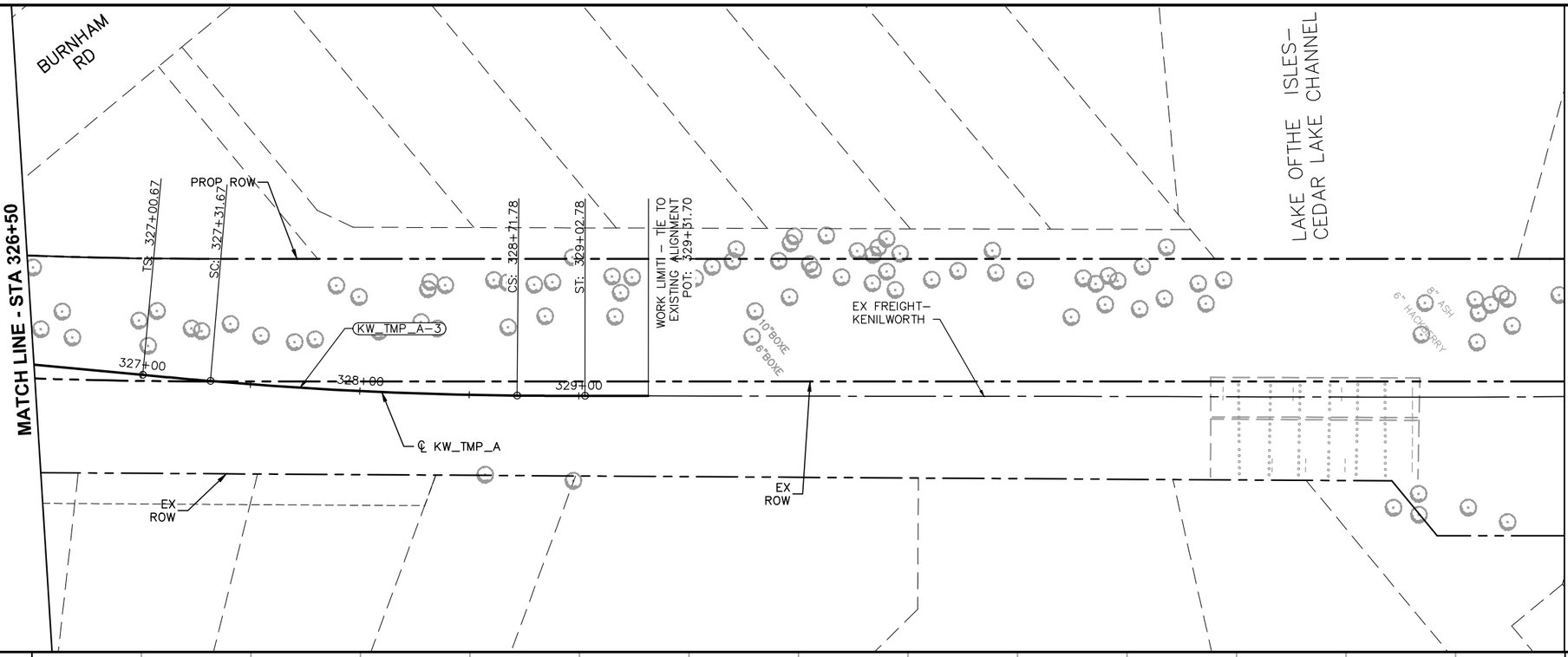

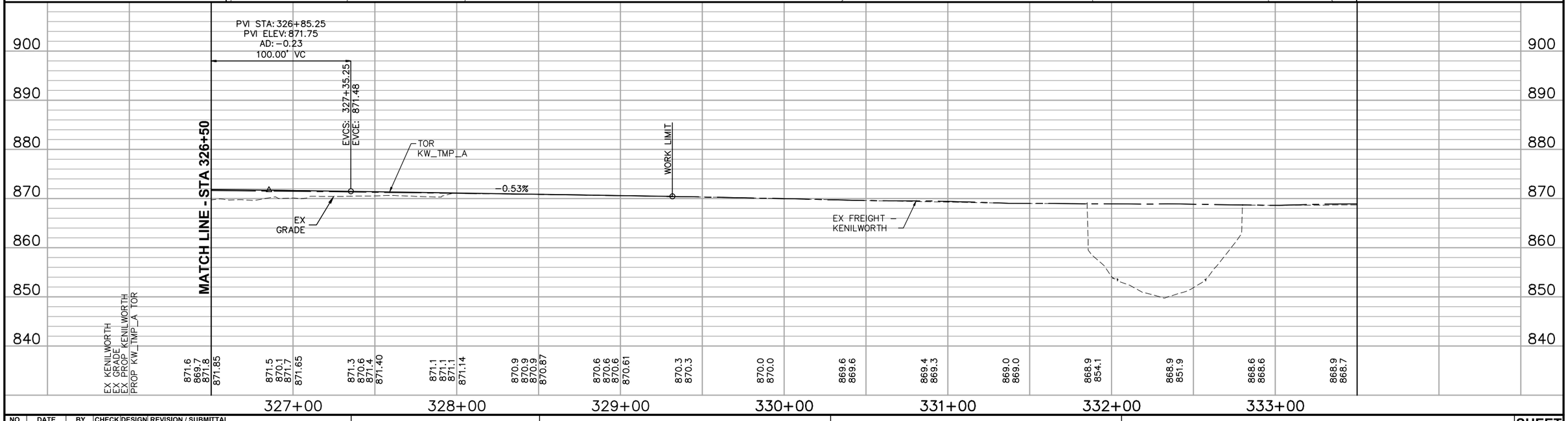

PVI STA: 326+85.25
PVI ELEV: 871.75
AD: –0.23
100.00' VC

NO.	DATE	BY	CHECK	DESIGN	REVISION / SUBMITTAL

AECOM

90% SUBMISSION - 01/22/16

METROPOLITAN COUNCIL

SOUTHWEST Green Line LRT Extension

CIVIL - VOLUME 3B
TEMPORARY FREIGHT KW_TMP_A
PLAN AND PROFILE
STA 326+50 TO STA 329+31.70

DISCIPLINE: TRACK

SHEET NAME: E3-FRT-KW_TMP_A - 005

SHEET 405 OF 420

Jan. 18 2016 10:48 am V:\3400_ADC\CAD\00_EAST\PLANSHEETS\TRACK\E3-FRT-TMP-PRF.dwg By: V-RaboodV

KW_TMP_B TRACK ALIGNMENT

DESCRIPTION	POINT DESC.	STATIONING	COORDINATES		SPIRAL AND CURVE DATA / EQUATIONS				TANGENT	
			NORTHING	EASTING					DISTANCE	BEARING
TIE IN	POT	301+78.87	157454.5179	515556.3238					173.63'	N 44° 32' 50'' E
	TS	303+52.50	157578.2600	515678.1254	Ls1 =	31.00'				
CURVE KW_TMP_B-1	SC	303+83.50	157600.4157	515699.8077	Rc1 =	1782.99'	Dc1 =	3° 12' 50''		
	PI	307+24.32	157866.4671	515911.9894	Lc1 =	606.96'	Ea =	0.00''		
	PCC	309+89.46	158098.5836	516039.7852	Rc2 =	1330.00'	Dc2 =	4° 18' 32''		
					Lc2 =	47.39'	Eu1 =	0.22''		
	CS	310+36.84	158142.0272	516058.7234	I =	22° 40' 56'' Left	Eu2 =	0.30''		
	ST	310+67.84	158170.7519	516070.3800	Ls2 =	31.00'	V =	10 mph		
TRACK AHEAD									392.89'	N 21° 51' 54'' E
CURVE KW_TMP_B-2	TS	314+60.73	158535.3746	516216.6987	Ls1 =	257.59'	Dc =	02° 57' 14''		
	SC	317+18.31	158772.2036	516317.8755	I =	14° 52' 43'' Right	Ea =	0.00''		
	PI	318+98.75	158934.6735	516395.9579	Rc =	1940.00'	Eu =	0.21''		
	CS	320+77.76	159079.9757	516502.6376	Lc =	359.45'	V =	10 MPH		
	ST	321+08.76	159104.8660	516521.1166	Ls2 =	31.00'				
TRACK AHEAD									50.00'	N 36° 44' 37'' E
TIE IN	POT	321+58.76	159144.9321	516551.0283						

Jan, 18 2016 10:50 am v:\3400_ADC\CAD\00_EAST\PLANSHEETS\TRACK\E3-FRT-TMP-ALG.dwg By: V-RaboodV

NO.	DATE	BY	CHECK	DESIGN	REVISION / SUBMITTAL

AECOM

90% SUBMISSION - 01/22/16

METROPOLITAN COUNCIL

SOUTHWEST Green Line LRT Extension

CIVIL - VOLUME 3B
TEMPORARY FREIGHT KW_TMP_B
ALIGNMENT DATA

DISCIPLINE: TRACK

SHEET NAME: E3-TRK-KW_TMP_B - 001

SHEET 406 OF 420

NOTE:
1. FOR DITCH INVERT AND DETAILS, SEE DRAINAGE PLANS

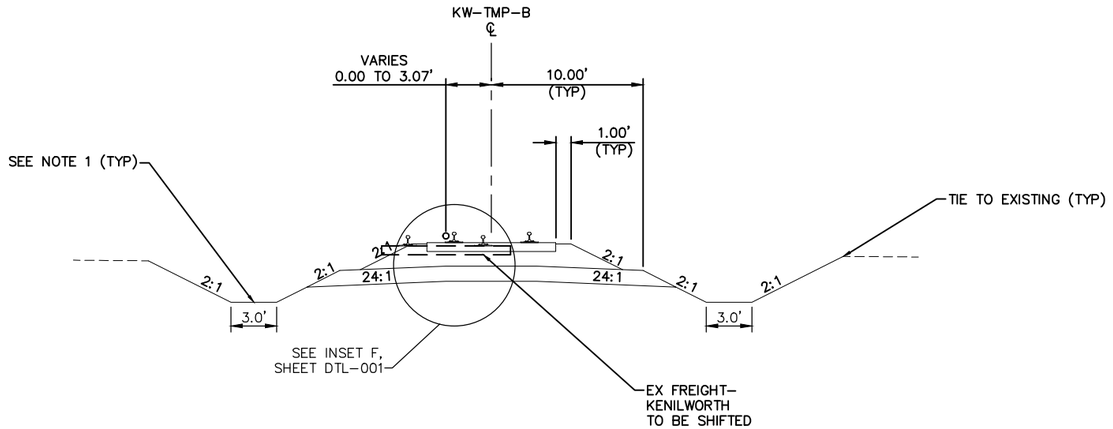

TYPICAL SECTION
STA 301+78.87 TO STA 306.31.50

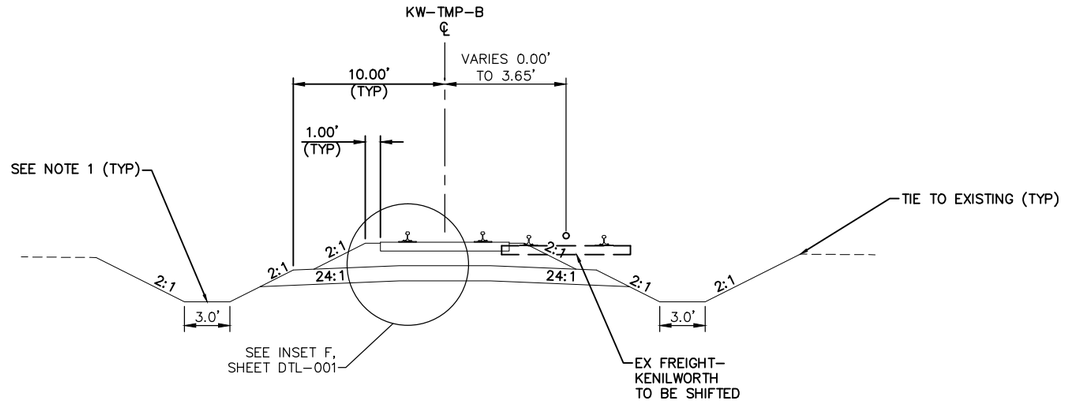

TYPICAL SECTION
STA 306+31.50 TO STA 315+20.64

0 2.5 5 10
SCALE IN FEET

NO.	DATE	BY	CHECK	DESIGN	REVISION / SUBMITTAL

AECOM

90% SUBMISSION - 01/22/16

METROPOLITAN COUNCIL

SOUTHWEST Green Line LRT Extension

CIVIL - VOLUME 3B
TEMPORARY FREIGHT KW_TMP_B
TYPICAL SECTIONS

DISCIPLINE: TRACK

SHEET NAME: E3-FRT-KW_TMP_B - 002

SHEET 407 OF 420

Jan, 18 2016 10:53 am V:\3400_ADC\CAD\00_EAST\PLANSHEETS\TRACK\E3-FRT-TMP-TYP.dwg By: V-RaboodV

NOTE:
1. FOR DITCH INVERT AND DETAILS, SEE DRAINAGE PLANS

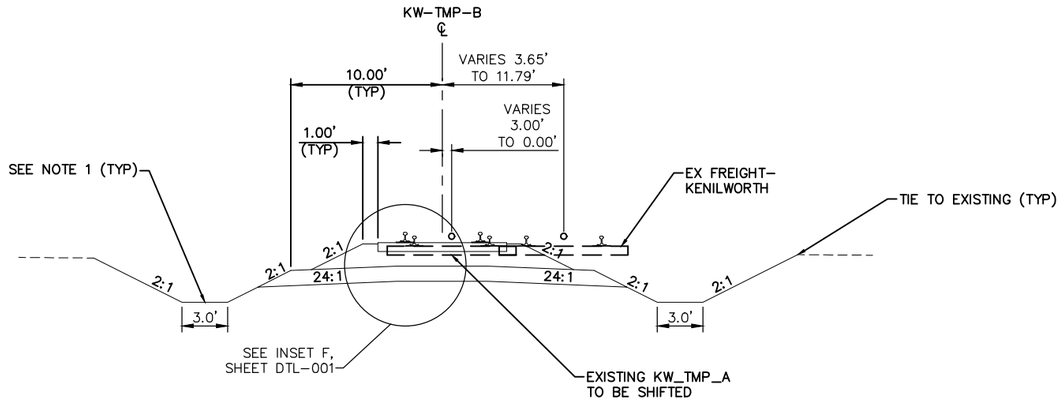

TYPICAL SECTION
STA 315+20.64 TO STA 315+58.76

0 2.5 5 10
SCALE IN FEET

NO.	DATE	BY	CHECK	DESIGN	REVISION / SUBMITTAL

AECOM

90% SUBMISSION - 01/22/16

METROPOLITAN COUNCIL

SOUTHWEST Green Line LRT Extension

CIVIL - VOLUME 3B
TEMPORARY FREIGHT KW_TMP_B
TYPICAL SECTIONS

DISCIPLINE: TRACK

SHEET NAME: E3-FRT-KW_TMP_B - 003

SHEET 408 OF 420

Jan. 20 2016 01:04 pm V:\3400_ADC\CAD\00_EAST\PLANSHEETS\TRACK\E3-FRT-TMP-TYP.dwg By: MaurisBM

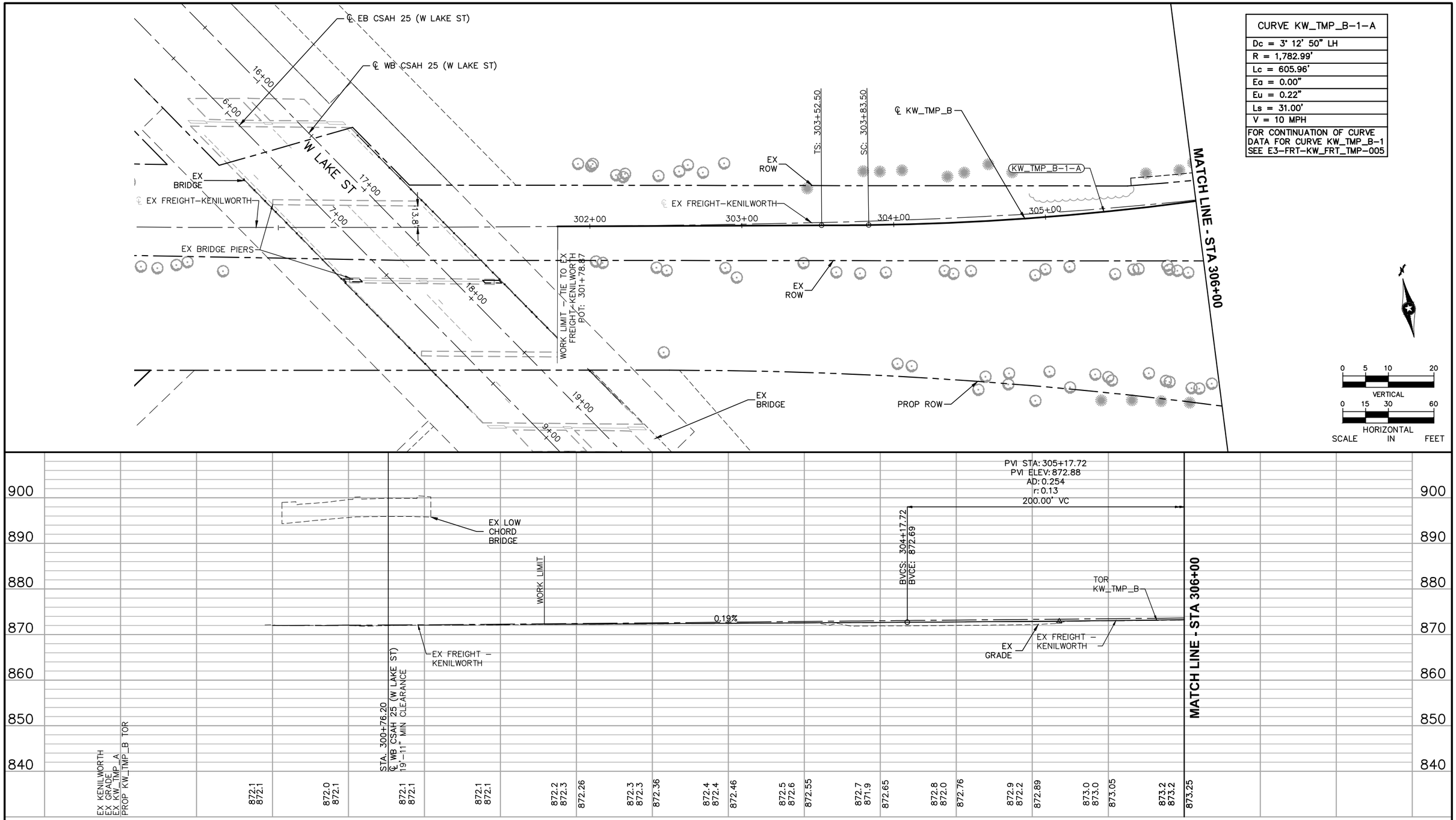

NO.	DATE	BY	CHECK	DESIGN	REVISION / SUBMITTAL

AECOM

90% SUBMISSION - 01/22/16

METROPOLITAN COUNCIL

SOUTHWEST Green Line LRT Extension

CIVIL - VOLUME 3B
TEMPORARY FREIGHT KW_TMP_B
PLAN AND PROFILE
STA 301+78.87 TO STA 306+00

DISCIPLINE: TRACK

SHEET NAME: E3-FRT-KW_TMP_B - 004

SHEET 409 OF 420

Jan, 18 2016 10:55 am V:\3400_ADC\CAD\00_EAST\PLANSHEETS\TRACK\E3-FRT-TMP-PRF.dwg By: V-RaboodV

CURVE KW_TMP_B-1-B
Dc = 4° 18' 32" LH
R = 1,330.00'
Lc = 47.39'
Ea = 0.00"
Eu = 0.30"
Ls = 31.00'
V = 10 MPH

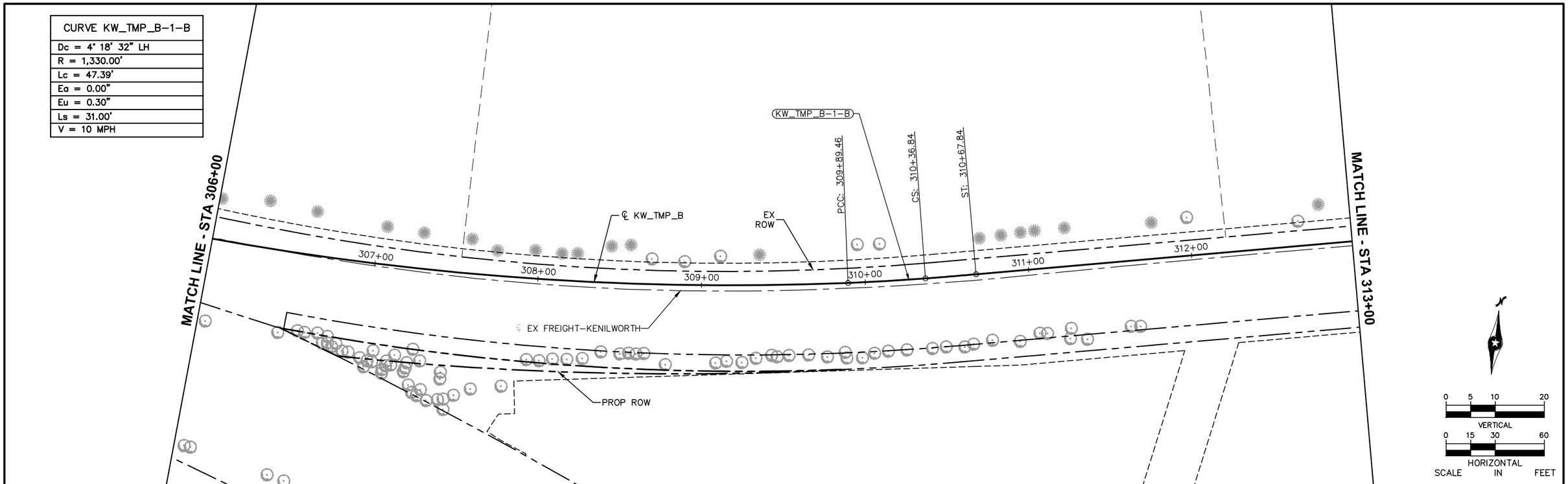

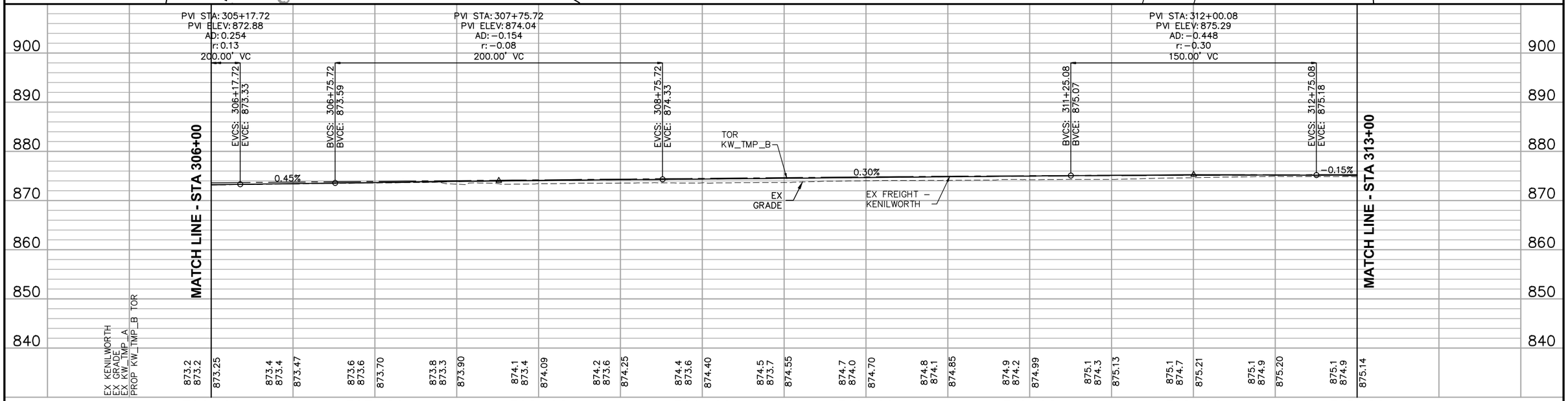

NO.	DATE	BY	CHECK	DESIGN	REVISION / SUBMITTAL

AECOM

90% SUBMISSION - 01/22/16

METROPOLITAN COUNCIL

SOUTHWEST Green Line LRT Extension

CIVIL - VOLUME 3B
TEMPORARY FREIGHT KW_TMP_B
PLAN AND PROFILE
STA 306+00 TO STA 313+00

DISCIPLINE: TRACK

SHEET NAME: E3-FRT-KW_TMP_B - 005

SHEET 410 OF 420

Jan. 18 2016 10:56 am V:\3400_ADC\CAD\00_EAST\PLANSHEETS\TRACK\E3-FRT-TMP-PRF.dwg By: V-RaboodV

CURVE KW_TMP_B-2
Dc = 2° 57' 14" RH
R = 1,940.00'
Lc = 359.45'
Ls1 = 257.59'
Ls2 = 31.00'
Ea = 0.00"
Eu = 0.21"
V = 10 MPH

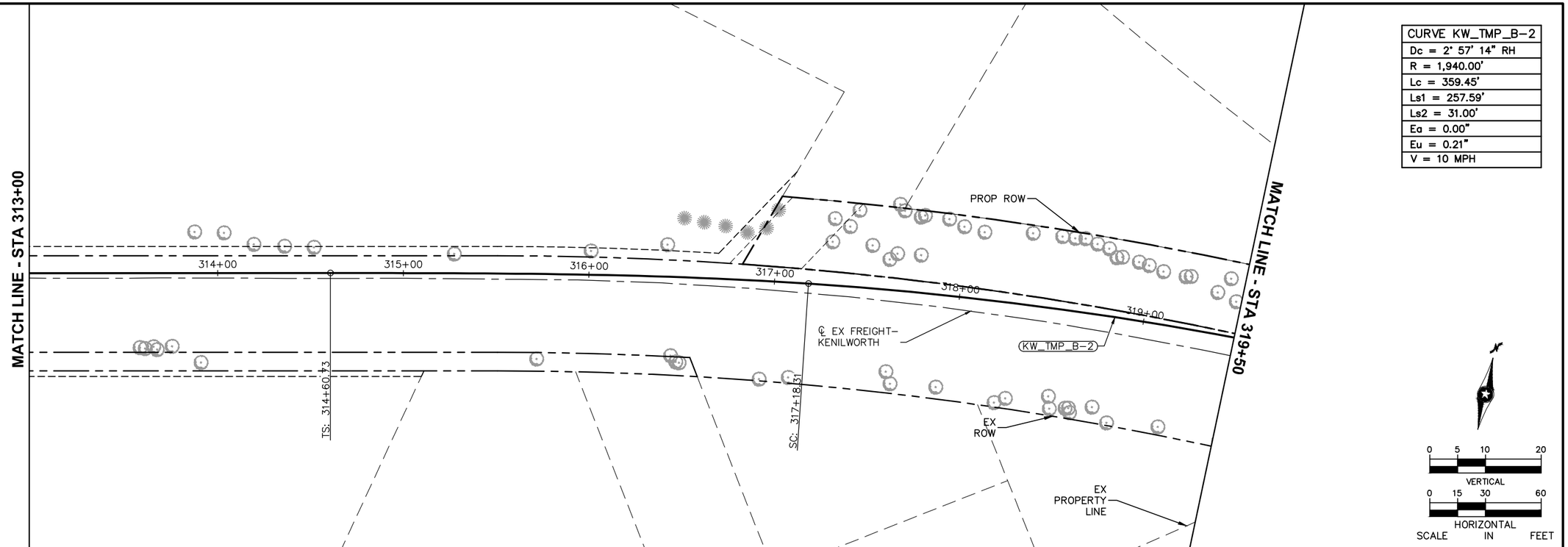

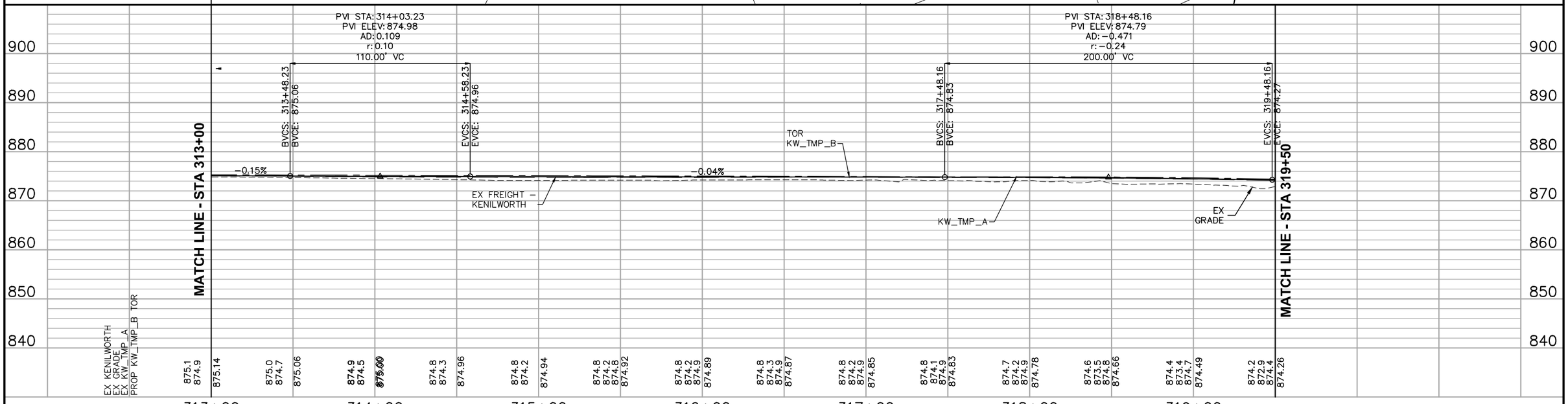

NO.	DATE	BY	CHECK	DESIGN	REVISION / SUBMITTAL

AECOM

90% SUBMISSION - 01/22/16

METROPOLITAN COUNCIL

SOUTHWEST Green Line LRT Extension

CIVIL - VOLUME 3B
TEMPORARY FREIGHT KW_TMP_B
PLAN AND PROFILE
STA 313+00 TO STA 319+50

SHEET 411 OF 420

DISCIPLINE: TRACK

SHEET NAME: E3-FRT-KW_TMP_B - 006

Jan, 18 2016 10:56 am V:\3400_ADC\CAD\00_EAST\PLANSHEETS\TRACK\E3-FRT-TMP-PRF.dwg By: V-RaboodV

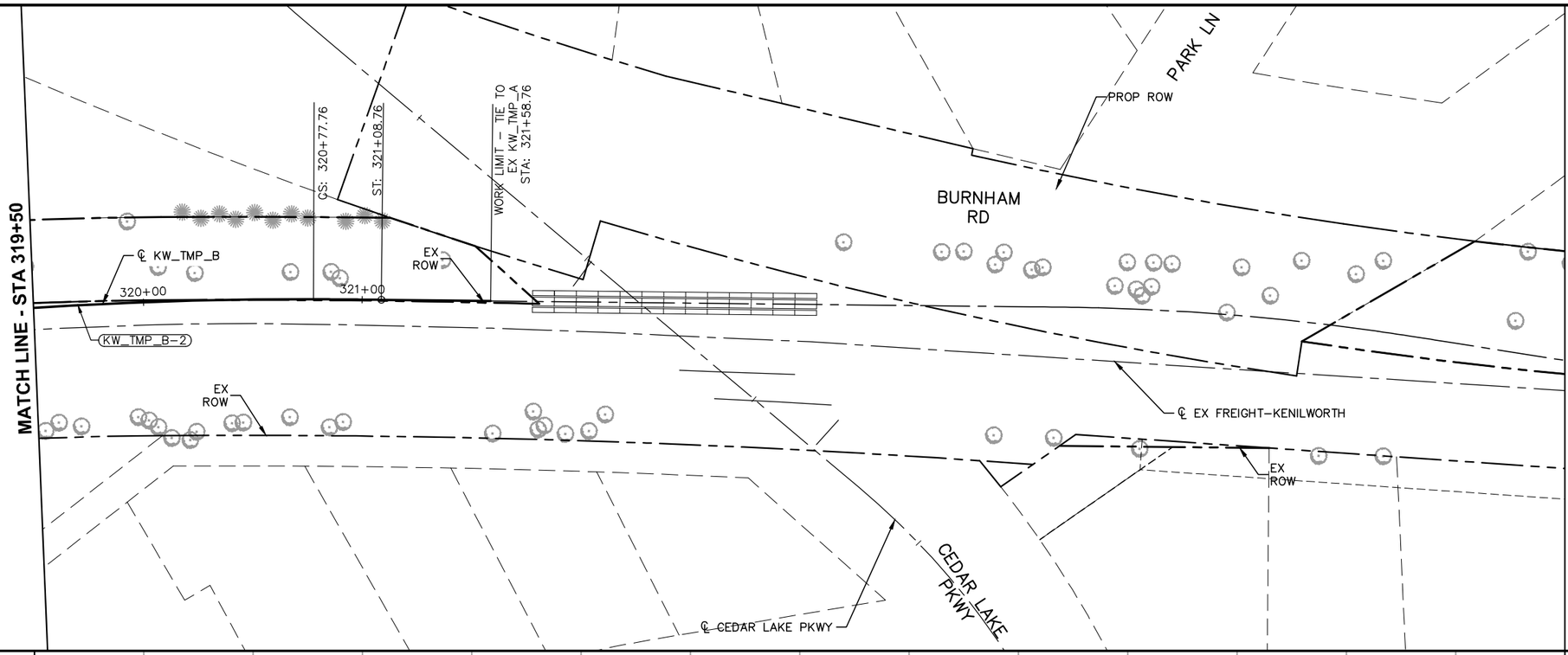

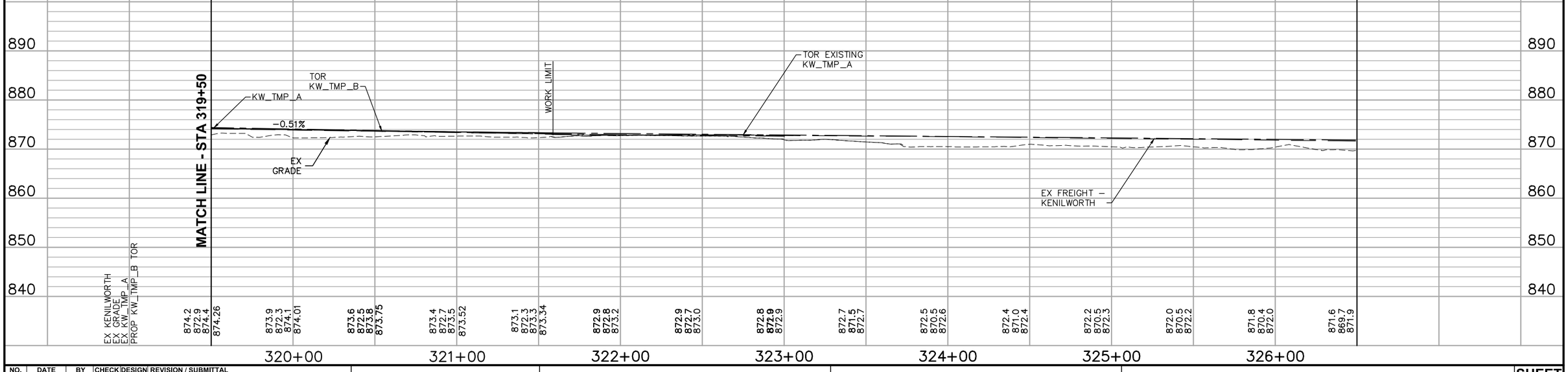

NO.	DATE	BY	CHECK	DESIGN	REVISION / SUBMITTAL

AECOM

90% SUBMISSION - 01/22/16

METROPOLITAN COUNCIL

SOUTHWEST Green Line LRT Extension

CIVIL - VOLUME 3B
TEMPORARY FREIGHT KW_TMP_B
PLAN AND PROFILE
STA 319+50 TO STA 321+58.76

DISCIPLINE: TRACK

SHEET NAME: E3-FRT-KW_TMP_B - 007

SHEET 412 OF 420

Jan. 18 2016 10:57 am V:\3400_ADC\CAD\00_EAST\PLANSHEETS\TRACK\E3-FRT-TMP-PRF.dwg By: V-RaboodV

KW_TMP_C TRACK ALIGNMENT

DESCRIPTION	POINT DESC.	STATIONING	COORDINATES		SPIRAL AND CURVE DATA / EQUATIONS				TANGENT	
			NORTHING	EASTING					DISTANCE	BEARING
TIE IN	POT	324+04.85	159342.8264	516698.7684					208.39'	N 36° 44' 37'' E
CURVE KW_TMP_C-1	TS	326+13.24	159509.8200	516823.4391	Ls1 =	31.00'	Dc =	1° 25' 00''		
	SC	326+44.24	159534.6372	516842.0161	I =	02° 59' 42'' Right	Ea =	0.00"		
	PI	327+34.48	159606.7288	516896.2684	Rc =	4044.51'	Eu =	0.10"		
	CS	328+24.66	159676.3295	516953.6815	Lc =	180.42'	V =	10 MPH		
	ST	328+55.66	159700.1928	516973.4689	Ls2 =	31				
TRACK AHEAD									86.17'	N 39° 44' 19'' E
TIE IN	POT	329+41.83	159766.4537	517028.5552						

Jan, 18 2016 10:58 am v:\3400_ADC\CAD\00_EAST\PLANSHEETS\TRACK\E3-FRT-TMP-ALG.dwg By: V-RaboodV

NO.	DATE	BY	CHECK	DESIGN	REVISION / SUBMITTAL

AECOM

90% SUBMISSION - 01/22/16

METROPOLITAN COUNCIL

SOUTHWEST Green Line LRT Extension

CIVIL - VOLUME 3B
TEMPORARY FREIGHT KW_TMP_C
ALIGNMENT DATA

DISCIPLINE: TRACK

SHEET NAME: E3-TRK-KW_TMP_C - 001

SHEET 413 OF 420

NOTE:
1. FOR DITCH INVERT AND DETAILS, SEE DRAINAGE PLANS

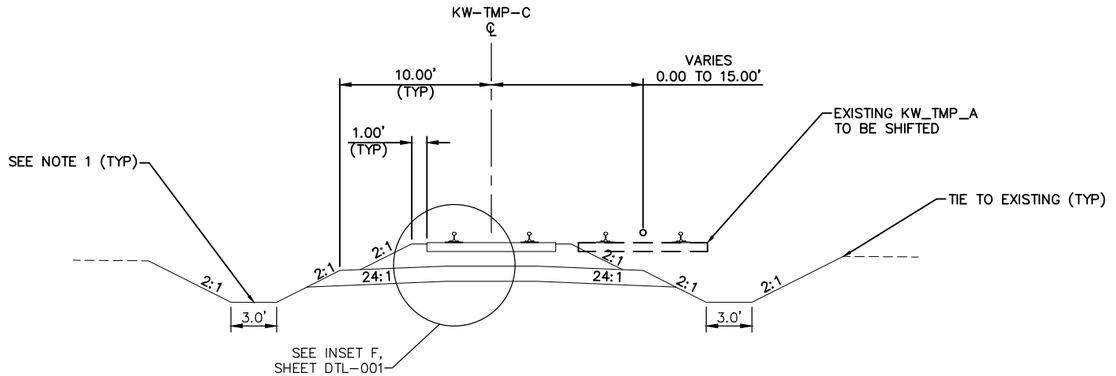

TYPICAL SECTION
STA 324+04.85 TO STA 329+41.83

SCALE 0 2.5 5 10 IN FEET

NO.	DATE	BY	CHECK	DESIGN	REVISION / SUBMITTAL

AECOM

90% SUBMISSION - 01/22/16

METROPOLITAN COUNCIL

SOUTHWEST Green Line LRT Extension

CIVIL - VOLUME 3B
TEMPORARY FREIGHT KW_TMP_C
TYPICAL SECTIONS

DISCIPLINE: TRACK

SHEET NAME: E3-FRT-KW_TMP_C - 002

SHEET 414 OF 420

Jan, 18 2016 11:01 am V:\3400_ADC\CAD\00_EAST\PLANSHEETS\TRACK\E3-FRT-TMP-TYP.dwg By: V-RaboodV

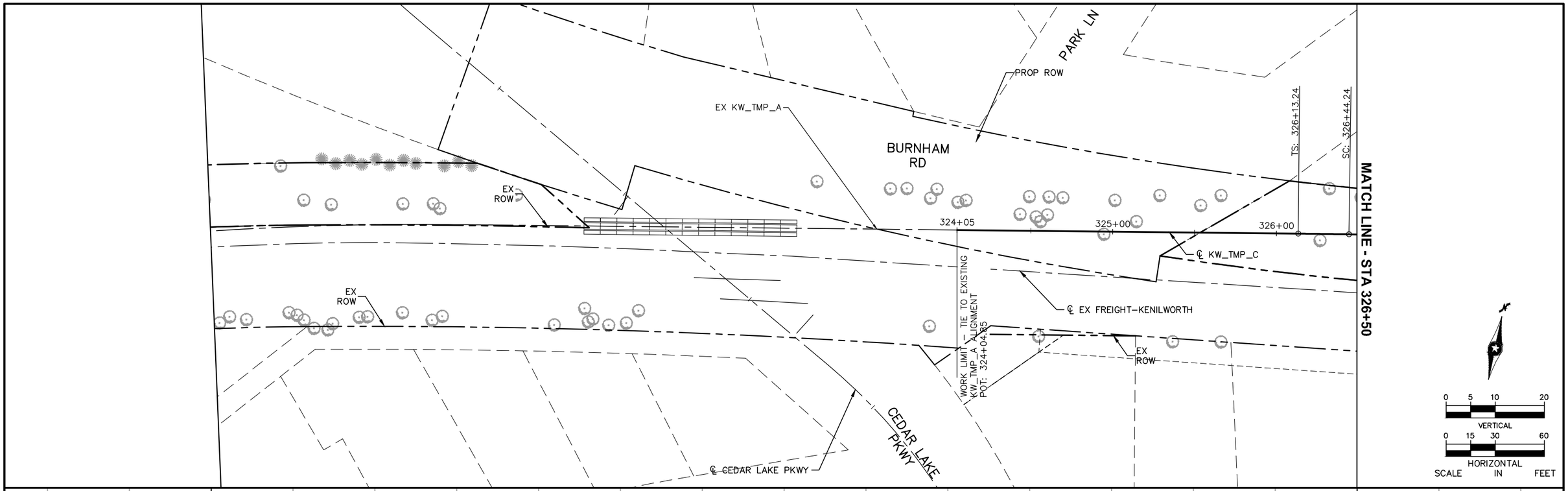

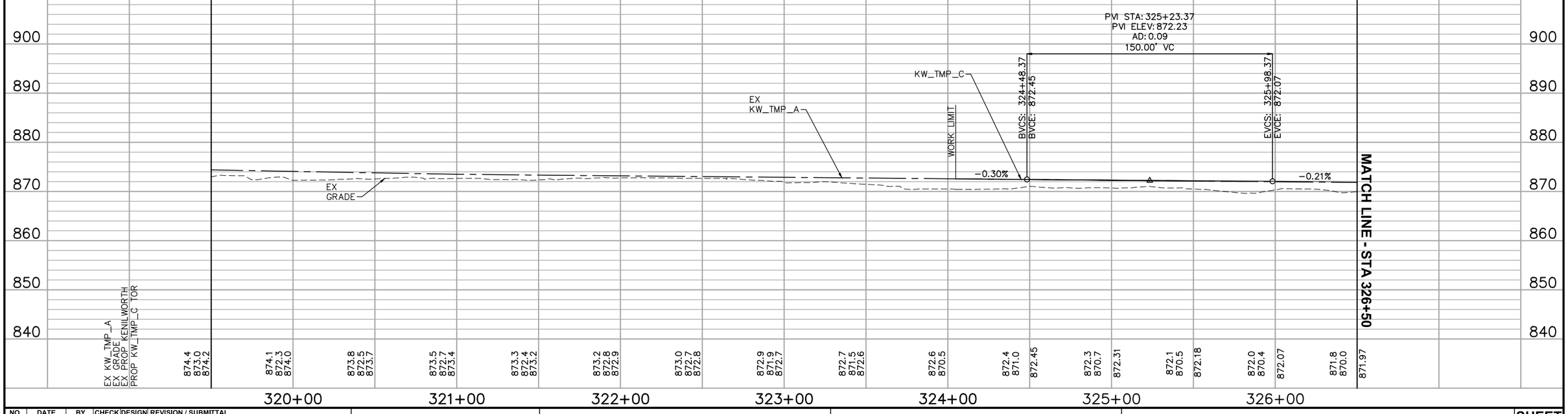

NO.	DATE	BY	CHECK	DESIGN	REVISION / SUBMITTAL

AECOM

90% SUBMISSION - 01/22/16

METROPOLITAN COUNCIL

SOUTHWEST Green Line LRT Extension

CIVIL - VOLUME 3B
TEMPORARY FREIGHT KW_TMP_C
PLAN AND PROFILE
STA 324+04.85 TO STA 326+50

SHEET 415 OF 420

DISCIPLINE: TRACK

SHEET NAME: E3-FRT-KW_TMP_C - 003

Jan. 18 2016 11:03 am V:\3400_ADC\CAD\00_EAST\PLANSHEETS\TRACK\E3-FRT-TMP-PRF.dwg By: V-RaboodV

CURVE KW_TMP_C-1
Dc = 1° 25' 00" RH
R = 4,044.51'
Lc = 180.42'
Ls1 = 31.00'
Ls2 = 31.00"
Ea = 0.00"
Eu = 0.60"
V = 10 MPH

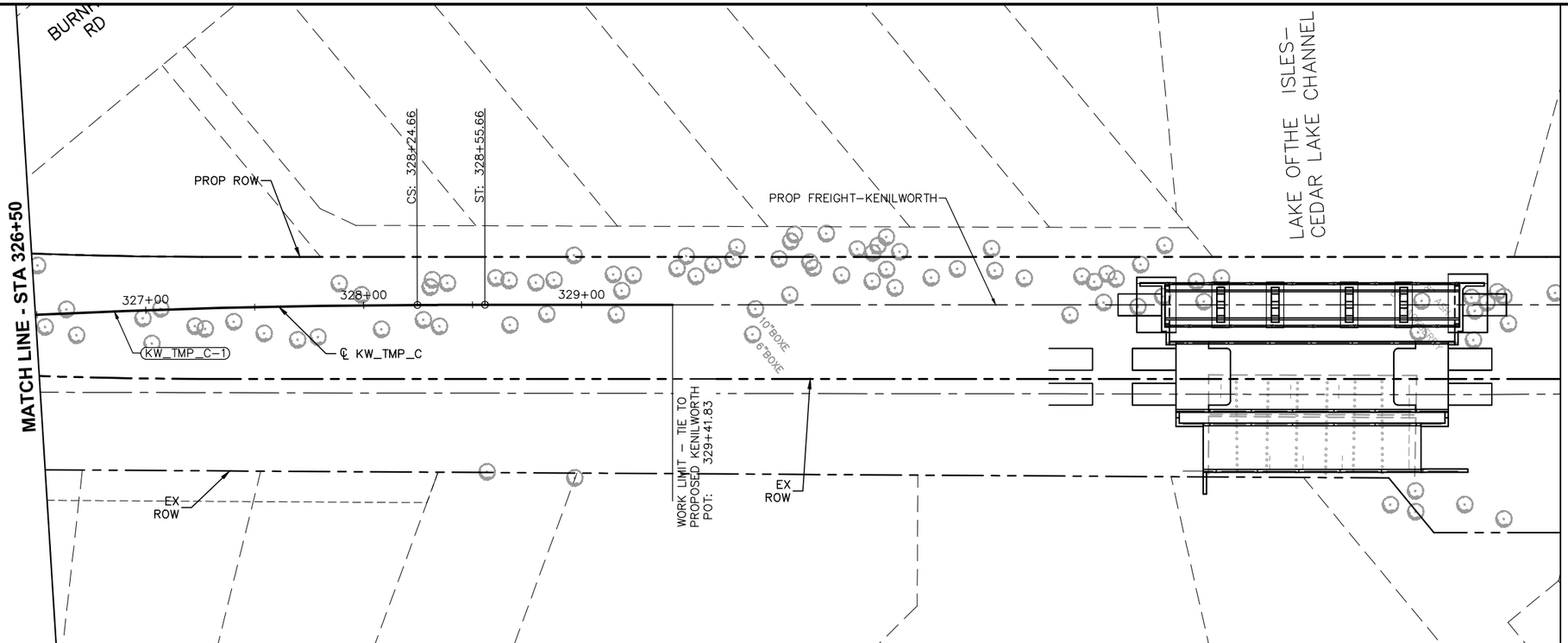

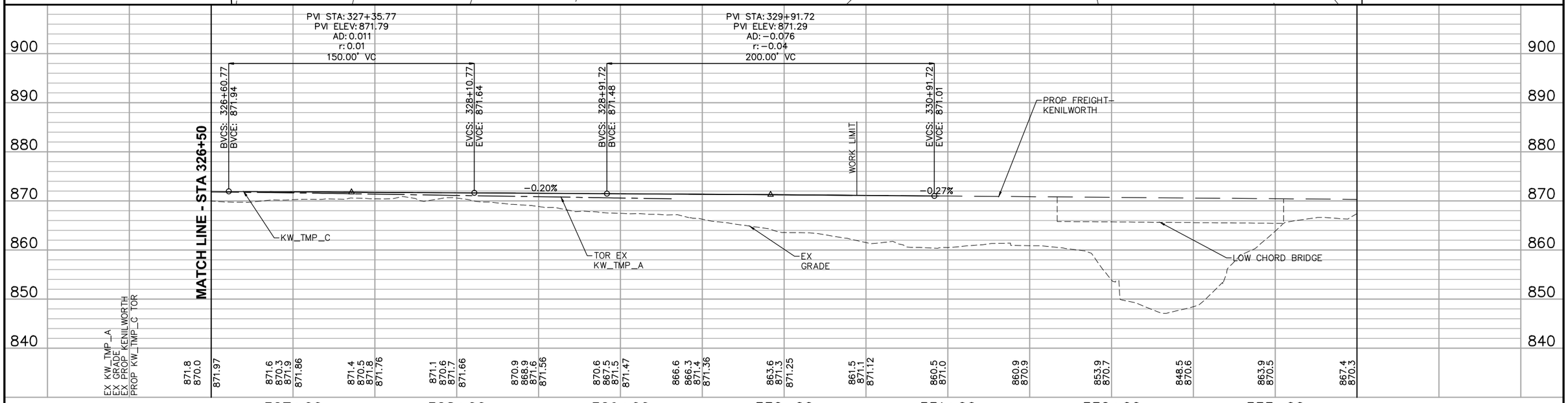

NO.	DATE	BY	CHECK	DESIGN	REVISION / SUBMITTAL

AECOM

90% SUBMISSION - 01/22/16

METROPOLITAN COUNCIL

SOUTHWEST Green Line LRT Extension

CIVIL - VOLUME 3B
TEMPORARY FREIGHT KW_TMP_C
PLAN AND PROFILE
STA 326+50 TO STA 329+41.83

DISCIPLINE: TRACK

SHEET NAME: E3-FRT-KW_TMP_C - 004

SHEET 416 OF 420

Jan, 18 2016 11:04 am V:\3400_ADC\CAD\00_EAST\PLANSHEETS\TRACK\E3-FRT-TMP-PRF.dwg By: V-RaboodV

KW_TMP_D TRACK ALIGNMENT

DESCRIPTION	POINT DESC.	STATIONING	COORDINATES		SPIRAL AND CURVE DATA / EQUATIONS				TANGENT	
			NORTHING	EASTING					DISTANCE	BEARING
TIE IN	POT	314+60.75	158535.3746	516216.6987					83.33'	N 21° 51' 54'' E
CURVE KW_TMP_C-1	TS	315+44.06	158612.7105	516247.7327	Ls1 =	62.00'	Dc =	3° 30' 00''		
	SC	316+06.06	158670.1027	516271.1851	I =	14° 15' 43'' Right	Ea =	0.00''		
	PI	317+79.47	158829.7934	516338.8048	Rc =	1637.28'	Eu =	0.25''		
	CS	319+51.55	158971.7754	516438.3771	Lc =	345.49'	V =	10 MPH		
	ST	320+13.55	159022.0825	516474.6134	Ls2 =	62.00'				
TRACK AHEAD									44.90'	N 36° 07' 36.82'' E
TIE IN	POT	320+58.45	159058.3528	516501.0882						

Jan, 18 2016 11:07 am v:\3400_ADC\CAD\00_EAST\PLANSHEETS\TRACK\E3-FRT-TMP-ALG.dwg By: V-RaboodV

NO.	DATE	BY	CHECK	DESIGN	REVISION / SUBMITTAL

AECOM

90% SUBMISSION - 01/22/16

METROPOLITAN COUNCIL

SOUTHWEST Green Line LRT Extension

CIVIL - VOLUME 3B
TEMPORARY FREIGHT KW_TMP_D
ALIGNMENT DATA

DISCIPLINE: TRACK

SHEET NAME: E3-FRT-KW_TMP_D - 001

SHEET 417 OF 420

NOTE:
1. FOR DITCH INVERT AND DETAILS, SEE DRAINAGE PLANS

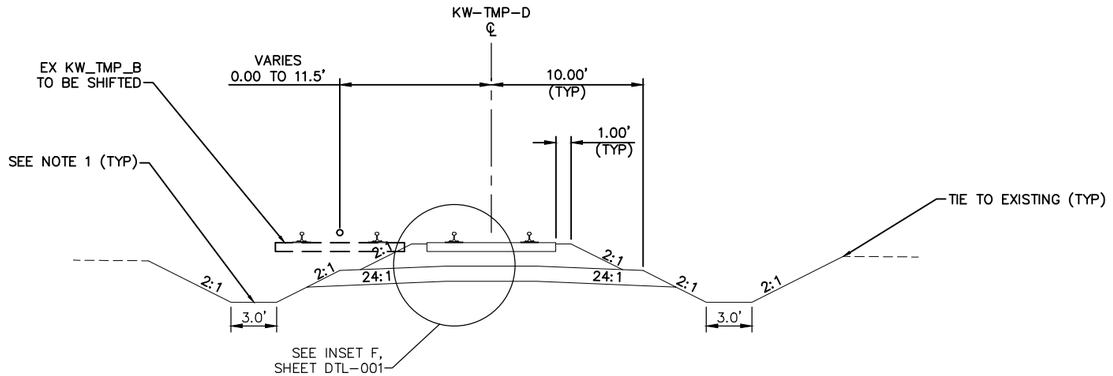

TYPICAL SECTION
STA 314+60.72 TO STA 320+58.45

0 2.5 5 10
SCALE IN FEET

NO.	DATE	BY	CHECK	DESIGN	REVISION / SUBMITTAL

AECOM

90% SUBMISSION - 01/22/16

METROPOLITAN COUNCIL

SOUTHWEST
Green Line LRT Extension

CIVIL - VOLUME 3B
TEMPORARY FREIGHT KW_TMP_D
TYPICAL SECTIONS

DISCIPLINE: TRACK

SHEET NAME: E3-FRT-KW_TMP_D - 002

SHEET 418 OF 420

Jan, 18 2016 11:10 am V:\3400_ADC\CAD\00_EAST\PLANSHEETS\TRACK\E3-FRT-TMP-TYP.dwg By: V-RaboodV

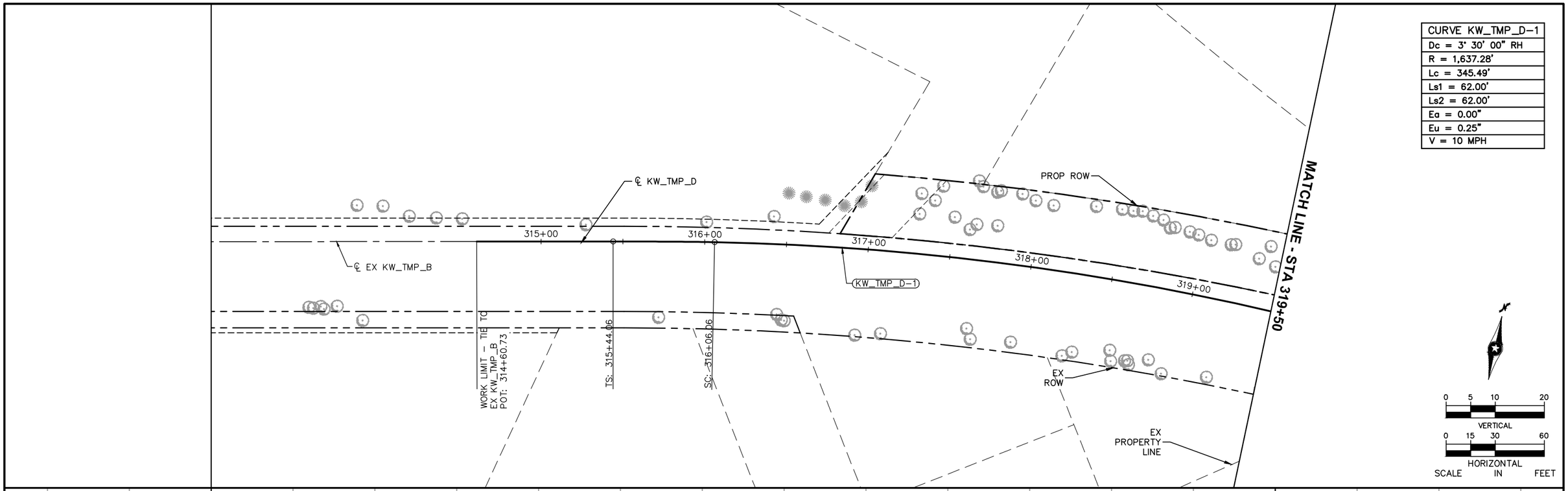

NO.	DATE	BY	CHECK	DESIGN	REVISION / SUBMITTAL

AECOM

90% SUBMISSION - 01/22/16

METROPOLITAN COUNCIL

SOUTHWEST Green Line LRT Extension

CIVIL - VOLUME 3B
TEMPORARY FREIGHT KW_TMP_D
PLAN AND PROFILE
STA 314+60.73 TO STA 319+50

DISCIPLINE: TRACK

SHEET NAME: E3-FRT-KW_TMP_D - 003

SHEET 419 OF 420

Jan. 18 2016 11:12 am V:\3400_ADC\CAD\00_EAST\PLANSHEETS\TRACK\E3-FRT-TMP-PRF.dwg By: V-RaboodV

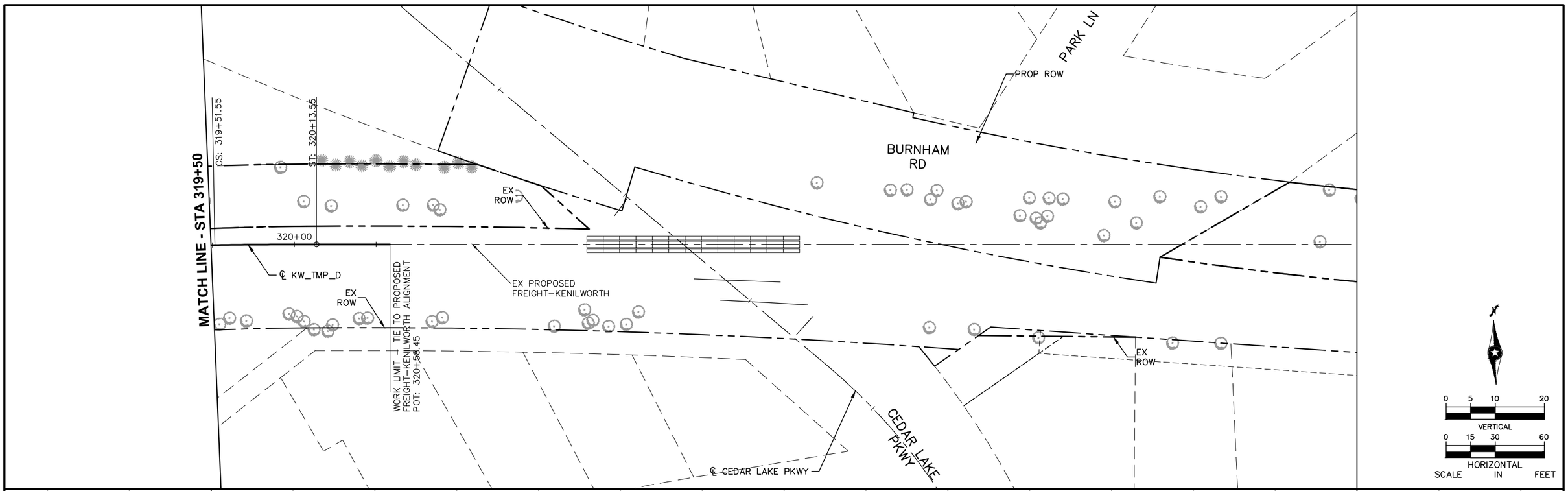

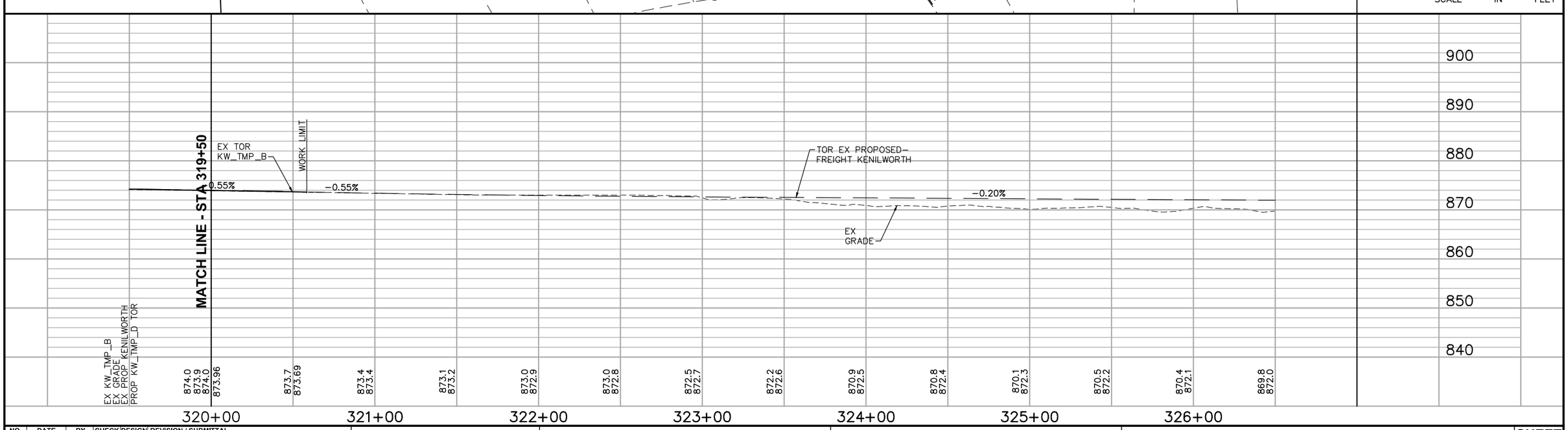

NO.	DATE	BY	CHECK	DESIGN	REVISION / SUBMITTAL

AECOM

90% SUBMISSION - 01/22/16

METROPOLITAN COUNCIL

SOUTHWEST Green Line LRT Extension

CIVIL - VOLUME 3B
TEMPORARY FREIGHT KW_TMP_D
PLAN AND PROFILE
STA 319+50 TO STA 320+58.45

SHEET 420 OF 420

DISCIPLINE: TRACK

SHEET NAME: E3-FRT-KW_TMP_D - 004

Jan. 18 2016 11:12 am V:\3400_ADC\CAD\00_EAST\PLANSHEETS\TRACK\E3-FRT-TMP-PRF.dwg By: V-RaboodV