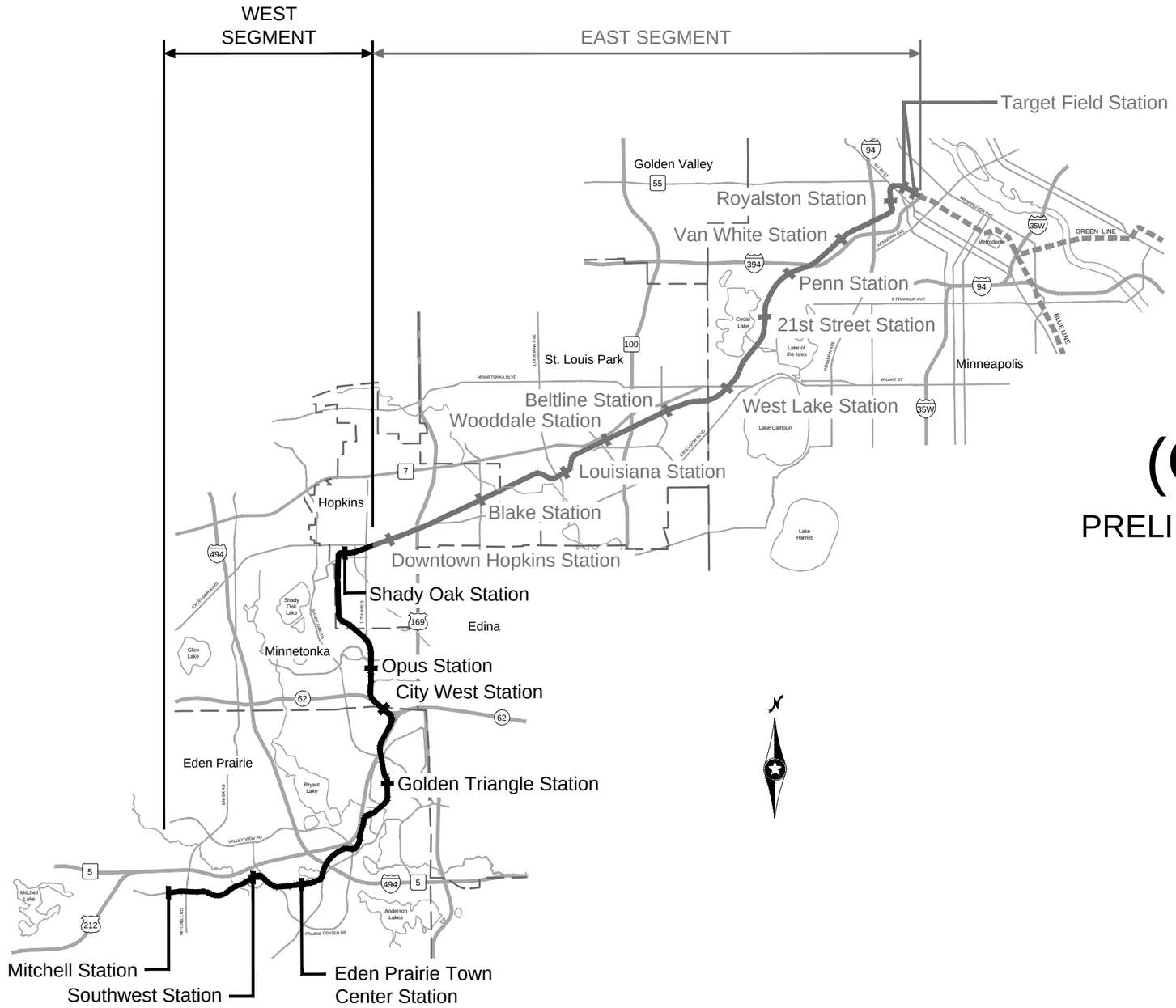

SOUTHWEST
Green Line LRT Extension

METROPOLITAN COUNCIL

WEST - VOLUME 1 (CIVIL) - SEGMENT 2

PRELIMINARY ENGINEERING (SEPTEMBER 2014)

INDEX

AECOM

PRELIMINARY - NOT FOR CONSTRUCTION

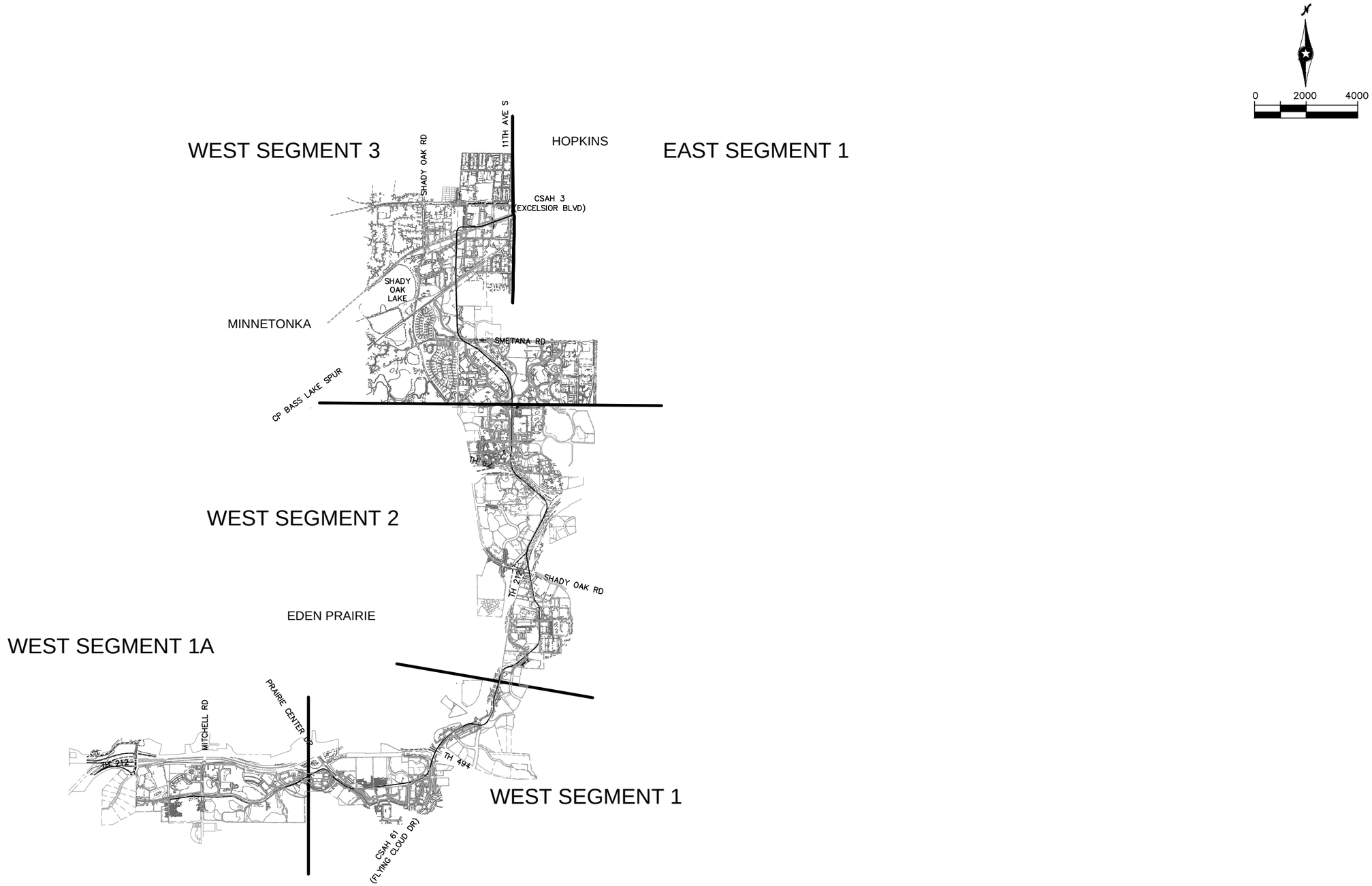

NO.	DATE	BY	CHECK	DESIGN	REVISION / SUBMITTAL
.	.	.	.	.	.
.	.	.	.	.	.
.	.	.	.	.	.
.	.	.	.	.	.
.	.	.	.	.	.
.	.	.	.	.	.
.	.	.	.	.	.
.	.	.	.	.	.
.	.	.	.	.	.

AECOM

PRELIMINARY ENGINEERING

METROPOLITAN COUNCIL

SOUTHWEST Green Line LRT Extension

WEST - VOLUME 1 (CIVIL) - SEGMENT 2
GENERAL
SEGMENT KEY MAP

DISCIPLINE: GENERAL

SHEET NAME: W2-GEN-KEY-001

SHEET 2 OF 107

Aug. 27 2014 10:23 am V:\3200_PEC-W\CAD\SEGMENT-W2\SHEET\GENERAL\W2-GEN-KEY.dwg By: MaurisakB

SURVEY NOTES

1. THE HORIZONTAL DATUM OF THIS MAP IS BASED ON THE HENNEPIN COUNTY COORDINATE SYSTEM WHICH IS RELATED TO THE MINNESOTA STATE PLANE COORDINATE SYSTEM NAD 83 (2007) ADJUSTMENT SOUTH ZONE.
2. PROJECT VERTICAL DATUM: NORTH AMERICAN VERTICAL DATUM OF 1988 (NAVD 88)
3. ALL COORDINATES AND ELEVATIONS SHOWN ARE IN U.S. SURVEY FEET.
4. THE PLANIMETRIC FEATURES SHOWN ON THIS MAP ARE AS PREPARED BY AERO-METRIC, INC. FROM AERIAL DATA AND IMAGERY COLLECTED IN APRIL 2012, AS SUPPLEMENTED BY FIELD SURVEYS COMPLETED BY RANI ENGINEERING, INC.
5. HORIZONTAL POSITIONAL ACCURACY: USING THE NATIONAL STANDARD FOR SPATIAL DATA ACCURACY, THE DATA SET TESTED 0.040 FEET HORIZONTAL ACCURACY AT A 95% CONFIDENCE LEVEL.
6. VERTICAL POSITIONAL ACCURACY: USING THE NATIONAL STANDARD FOR SPATIAL DATA ACCURACY, THE DATA SET TESTED 0.010 FEET VERTICAL ACCURACY AT 95% CONFIDENCE LEVEL.

TOPOGRAPHIC SYMBOLS

- CATCH BASIN
- STORM MANHOLE
- SANITARY MANHOLE
- SANITARY CLEANOUT
- WATER MANHOLE
- WATER GATE VALVE MANHOLE
- WATER VALVE
- WATER METER
- CORP STOP
- HYDRANT
- ELECTRIC METER
- ELECTRIC TRANSFORMER
- ELECTRIC PANEL
- ELECTRIC MANHOLE
- ELECTRIC BOX
- GAS VALVE
- GAS METER
- TRAFFIC SIGNAL
- LIGHT POLE
- HAND HOLE (STRUCTURE)
- CABLE TELEVISION
- COMMUNICATION STRUCTURE
- TELEPHONE STRUCTURE
- TELEPHONE MANHOLE
- FIBER OPTIC MANHOLE
- UTILITY POLE
- UTILITY POLE W/LIGHT
- TREE (DECIDUOUS)
- TREE (CONIFEROUS)
- LIGHT POLE
- CAMERA
- MONITOR WELL
- BOLLARD
- SIGN
- FLAG POLE
- UNIDENTIFIED STRUCTURE
- EXISTING DIRECTIONAL LANE USE
- EXISTING SIGNALIZED INTERSECTION
- SURVEY CONTROL STATION
- WETLAND
- WATER PIV VALVE
- STORM SEWER FLARED END

LINETYPES

- P-OH — OVERHEAD ELECTRIC
- P-OH-TRAN — OVERHEAD ELECTRIC TRANSMISSION
- P-UG — UNDERGROUND ELECTRIC
- T-UG — UNDERGROUND TELEPHONE
- COM-OH — OVERHEAD COMMUNICATION
- COM-UG — UNDERGROUND COMMUNICATION
- CABLE-OH — OVERHEAD CABLE TELEVISION
- CATV — UNDERGROUND CABLE TELEVISION
- FIB-OPT — UNDERGROUND FIBER OPTIC
- FUEL-UG — UNDERGROUND FUEL
- GAS — UNDERGROUND GAS
- ABANDONED UTILITY
- WATER
- SANITARY SEWER
- SANITARY FORCE MAIN
- STORM SEWER
- CURB AND GUTTER
- FENCE
- GUARDRAIL
- WALK
- BUILDING
- RIGHT-OF-WAY
- PROPERTY LINE
- CENTERLINE OF RAIL
- CENTERLINE OF TRAIL
- VEGETATION
- WATER BODY
- TRAF — TRAFFIC CONTROL

TRAIL INDEX

ABBREVIATED NAME	FULL NAME/LOCATION
MN RIVER BLUFFS TRAIL	MINNESOTA RIVER BLUFFS LRT REGIONAL TRAIL/WEST OF EXCELSIOR
CEDAR LAKE TRAIL	CEDAR LAKE LRT REGIONAL TRAIL/EAST OF EXCELSIOR
TRAIL A	NOT USED
TRAIL B	NOT USED
TRAIL C	10' CONNECTOR TRAIL FROM CEDAR LAKE TRAIL TO TYLER AVE.
TRAIL D	10' CONNECTOR TRAIL/BELTLINE STATION
KENILWORTH TRAIL	KENILWORTH TRAIL (MAIN)/W LAKE ST TO PENN STATION
TRAIL E	KENILWORTH TRAIL (SECONDARY)/W LAKE ST TO CEDAR LAKE PKWY
TRAIL F	KENILWORTH TRAIL (SECONDARY)/WEST OF PENN STATION
TRAIL F	NORTH CEDAR LAKE TRAIL (SECONDARY)/EAST OF PENN STATION
TRAIL G	KENILWORTH TRAIL (SECONDARY)/WEST OF PENN STATION
TRAIL G	NORTH CEDAR LAKE TRAIL (SECONDARY)/EAST OF PENN STATION
TRAIL H	10' CONNECTOR TRAIL/EAST OF PENN STATION TO KENWOOD PKWY
TRAIL I	NORTH CEDAR LAKE TRAIL (MAIN) ON BRIDGE OVER LIGHT RAIL
TRAIL J	NORTH CEDAR LAKE TRAIL (SECONDARY)/NORTHWEST OF PENN STATION
TRAIL K	NORTH CEDAR LAKE TRAIL (SECONDARY)/NORTHWEST OF PENN STATION
TRAIL L	20' CONNECTOR TRAIL/VAN WHITE STATION
TRAIL M	NORTH CEDAR LAKE TRAIL (SECONDARY)/EAST OF I-94
TRAIL N	8' CONNECTOR TRAIL FROM CEDAR LAKE TRAIL TO EDGEBROOK DRIVE
TRAIL O	8' CONNECTOR TRAIL FROM CEDAR LAKE TRAIL TO W. LAKE STREET
TRAIL P	8' CONNECTOR TRAIL FROM CEDAR LAKE TRAIL TO LOUISIANA AVE.
TRAIL Q	10' CONNECTOR TRAIL FROM CEDAR LAKE TRAIL TO T.H. 7 SERVICE ROAD

ABBREVIATIONS

AVE	AVENUE
BLVD	BOULEVARD
BNSF	BURLINGTON NORTHERN SANTA FE RAILWAY
℄	CENTERLINE
CP	CANADIAN PACIFIC
CPRAIL	CANADIAN PACIFIC RAILWAY
CSAH	COUNTY STATE AID HIGHWAY
EB	EAST BOUND
EX	EXISTING
HCRRA	HENNEPIN COUNTY REGIONAL RAILROAD AUTHORITY
MPLS	CITY OF MINNEAPOLIS
MPRB	MINNEAPOLIS PARK AND RECREATION BOARD
N	NORTH
NB	NORTH BOUND
OH	OVERHEAD
PKWY	PARKWAY
ROW	RIGHT OF WAY
S	SOUTH
SB	SOUTH BOUND
SCS	SURVEY CONTROL STATION
ST	STREET
STA	STATION
UG	UNDERGROUND
WB	WEST BOUND
RD	ROAD
LN	LANE
DR	DRIVE
TH	TRUNK HIGHWAY
CIR	CIRCLE

NO.	DATE	BY	CHECK	DESIGN	REVISION / SUBMITTAL
.	.	.	.	.	.
.	.	.	.	.	.
.	.	.	.	.	.
.	.	.	.	.	.
.	.	.	.	.	.
.	.	.	.	.	.
.	.	.	.	.	.
.	.	.	.	.	.
.	.	.	.	.	.

AECOM RANI engineering

PRELIMINARY ENGINEERING

METROPOLITAN COUNCIL SOUTHWEST Green Line LRT Extension

WEST - VOLUME 1 (CIVIL) - SEGMENT 2
EXISTING CONDITIONS
NOTES AND LEGEND

DISCIPLINE: SURVEY

SHEET NAME: W2-SUR-NTS-001

SHEET 3 OF 107

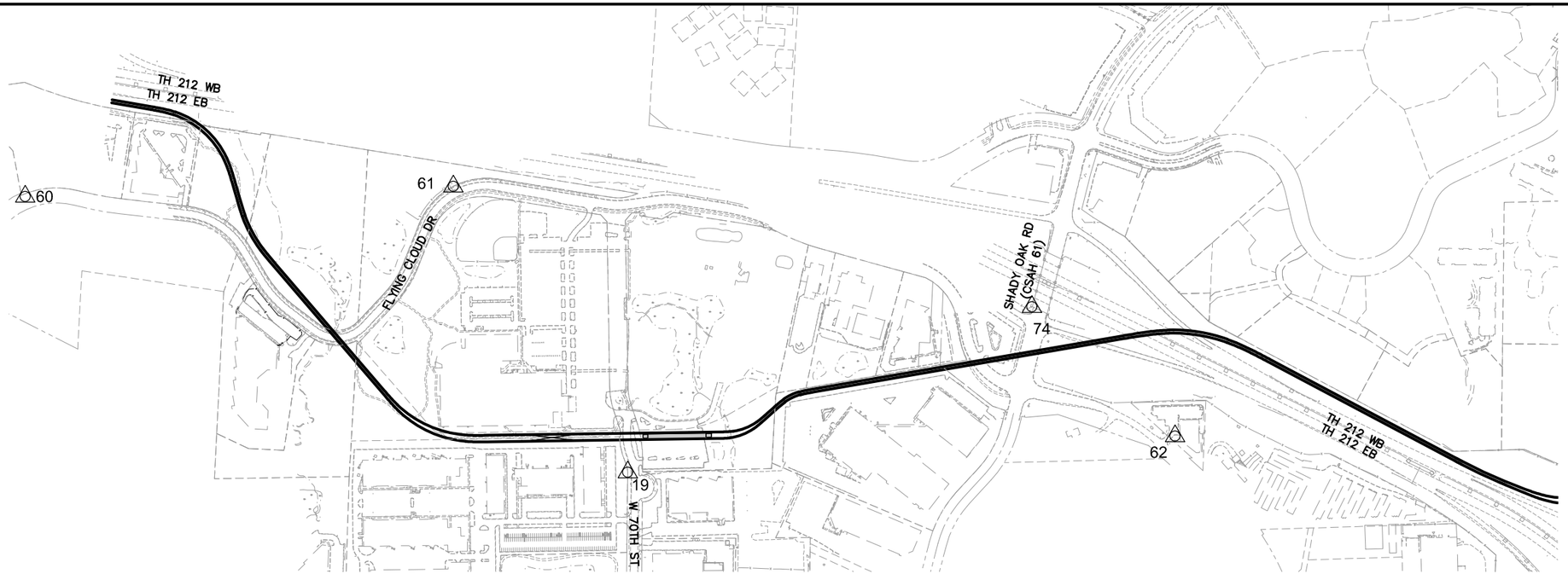

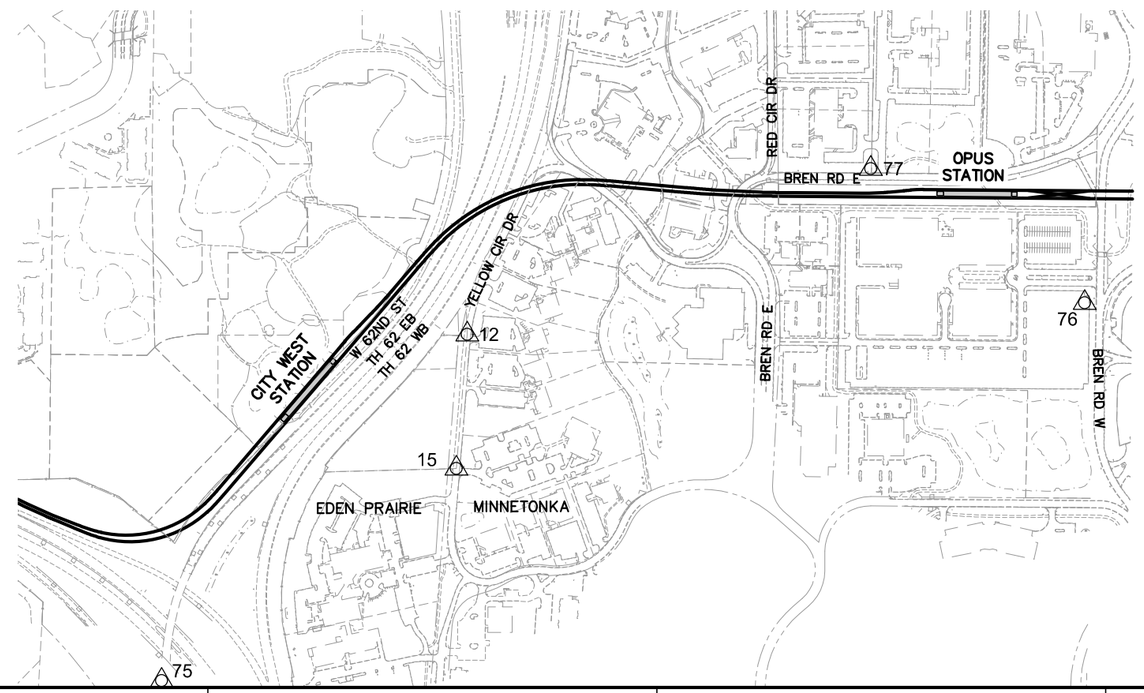

SWLRT - SURVEY CONTROL STATIONS				
Point	Northing	Easting	Elevation	Description
12	136869.276	492623.192	946.364	CAST IRON MONUMENT
15	136826.162	493154.628	960.349	CAST IRON MONUMENT
19	131161.793	493298.366	868.211	CAST IRON MONUMENT
60	128367.069	492018.757	883.739	TOP NUT HYDRANT
61	130353.132	491972.120	860.007	TOP NUT HYDRANT
62	133701.162	493130.431	896.895	TOP NUT HYDRANT
74	133037.032	492530.695	899.016	CAST IRON MONUMENT
75	135659.870	493994.283	953.997	CAST IRON MONUMENT
76	139314.589	492498.168	894.326	MAG NAIL
77	138466.995	491967.163	895.934	TOP NUT HYDRANT

0 150 300 600
HORIZONTAL
SCALE IN FEET

NO.	DATE	BY	CHECK	DESIGN	REVISION / SUBMITTAL
.	.	.	.	.	.
.	.	.	.	.	.
.	.	.	.	.	.
.	.	.	.	.	.
.	.	.	.	.	.
.	.	.	.	.	.
.	.	.	.	.	.
.	.	.	.	.	.
.	.	.	.	.	.

AECOM RANI engineering

PRELIMINARY ENGINEERING

METROPOLITAN COUNCIL SOUTHWEST Green Line LRT Extension

WEST - VOLUME 1 (CIVIL) - SEGMENT 2
EXISTING CONDITIONS
CONTROL POINTS PLAN

DISCIPLINE: SURVEY

SHEET NAME: W2-SUR-CTRL-001

SHEET 4 OF 107

Aug. 27 2014 09:40 am V:\3200_pec-w\CAD\SEGMENT-W2\LAYOUTS\W2-SUR-CTRL.dwg By: areinisch

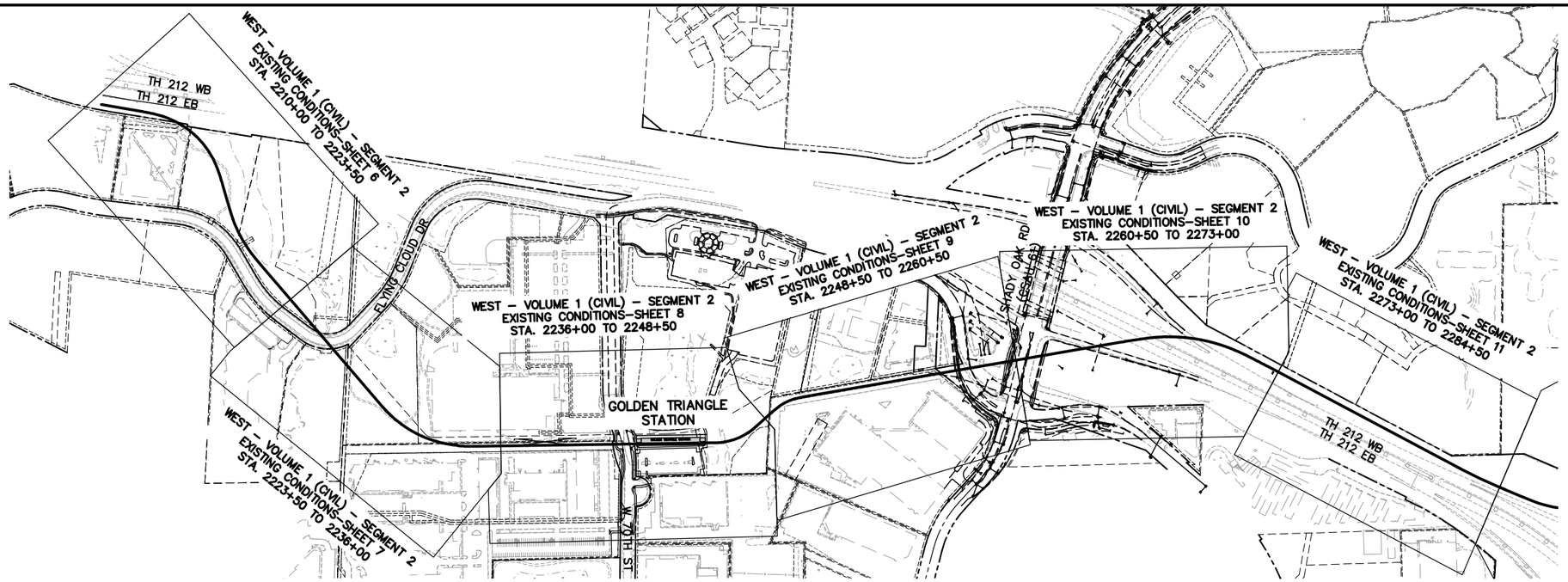

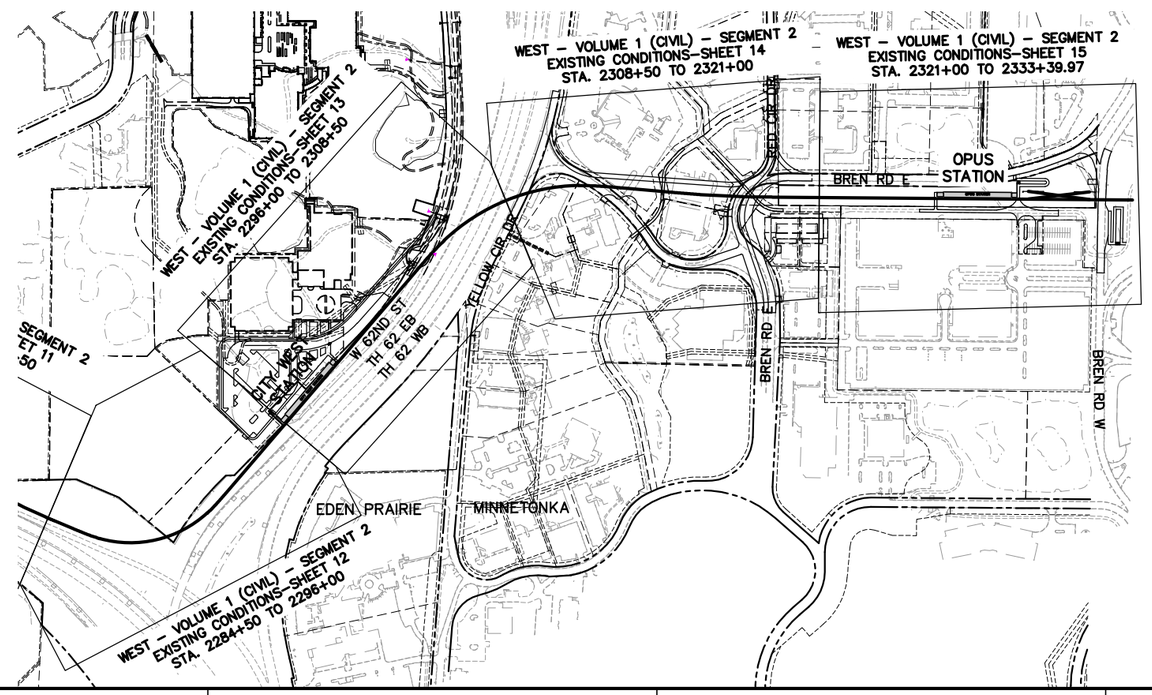

0 150 300 600
HORIZONTAL
SCALE IN FEET

NO.	DATE	BY	CHECK	DESIGN	REVISION / SUBMITTAL
.	.	.	.	.	.
.	.	.	.	.	.
.	.	.	.	.	.
.	.	.	.	.	.
.	.	.	.	.	.
.	.	.	.	.	.
.	.	.	.	.	.
.	.	.	.	.	.
.	.	.	.	.	.
.	.	.	.	.	.

AECOM RANI engineering

PRELIMINARY ENGINEERING

METROPOLITAN COUNCIL SOUTHWEST Green Line LRT Extension

WEST - VOLUME 1 (CIVIL) - SEGMENT 2 EXISTING CONDITIONS SHEET INDEX

DISCIPLINE: SURVEY

SHEET NAME: W2-SUR-IDX-001

SHEET 5 OF 107

Aug. 27 2014 09:41 am V:\3200_pec-w\CAD\SEGMENT-W2\LAYOUTS\W2-SUR-IDX.dwg By: areinisch

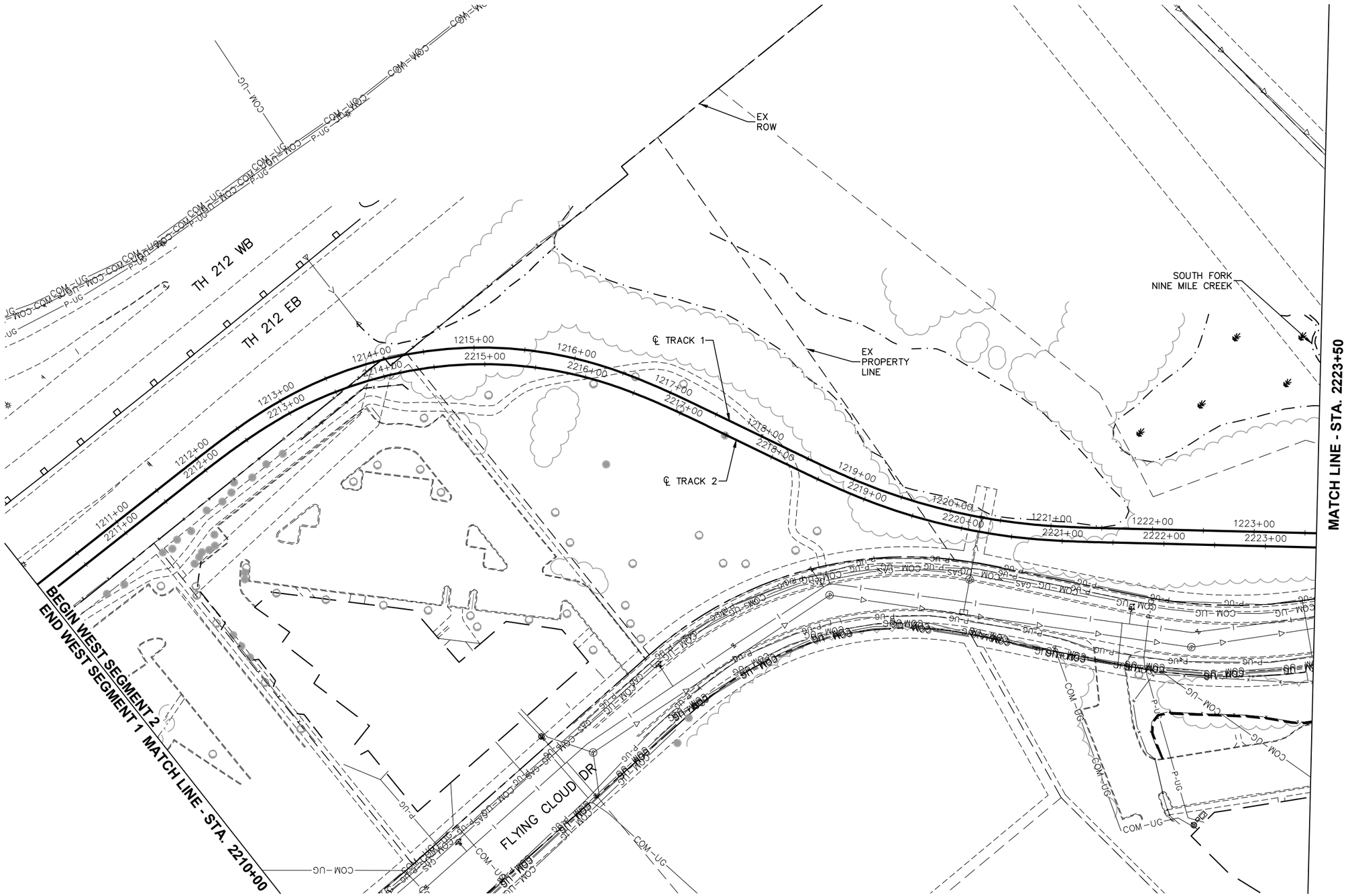

NO.	DATE	BY	CHECK	DESIGN	REVISION / SUBMITTAL
.	.	.	.	.	.
.	.	.	.	.	.
.	.	.	.	.	.
.	.	.	.	.	.
.	.	.	.	.	.
.	.	.	.	.	.
.	.	.	.	.	.
.	.	.	.	.	.
.	.	.	.	.	.

AECOM RANI engineering

PRELIMINARY ENGINEERING

METROPOLITAN COUNCIL SOUTHWEST Green Line LRT

WEST - VOLUME 1 (CIVIL) - SEGMENT 2
EXISTING CONDITIONS
PLAN
STA. 2210+00 TO STA. 2223+50

DISCIPLINE: SURVEY

SHEET NAME: W2-SUR-PLN-001

SHEET 6 OF 107

Jun, 27 2014 10:51 am V:\3200_pec-w\CAD\SEGMENT-W2\LAYOUTS\W2-SUR-PLN.dwg By: jschneider

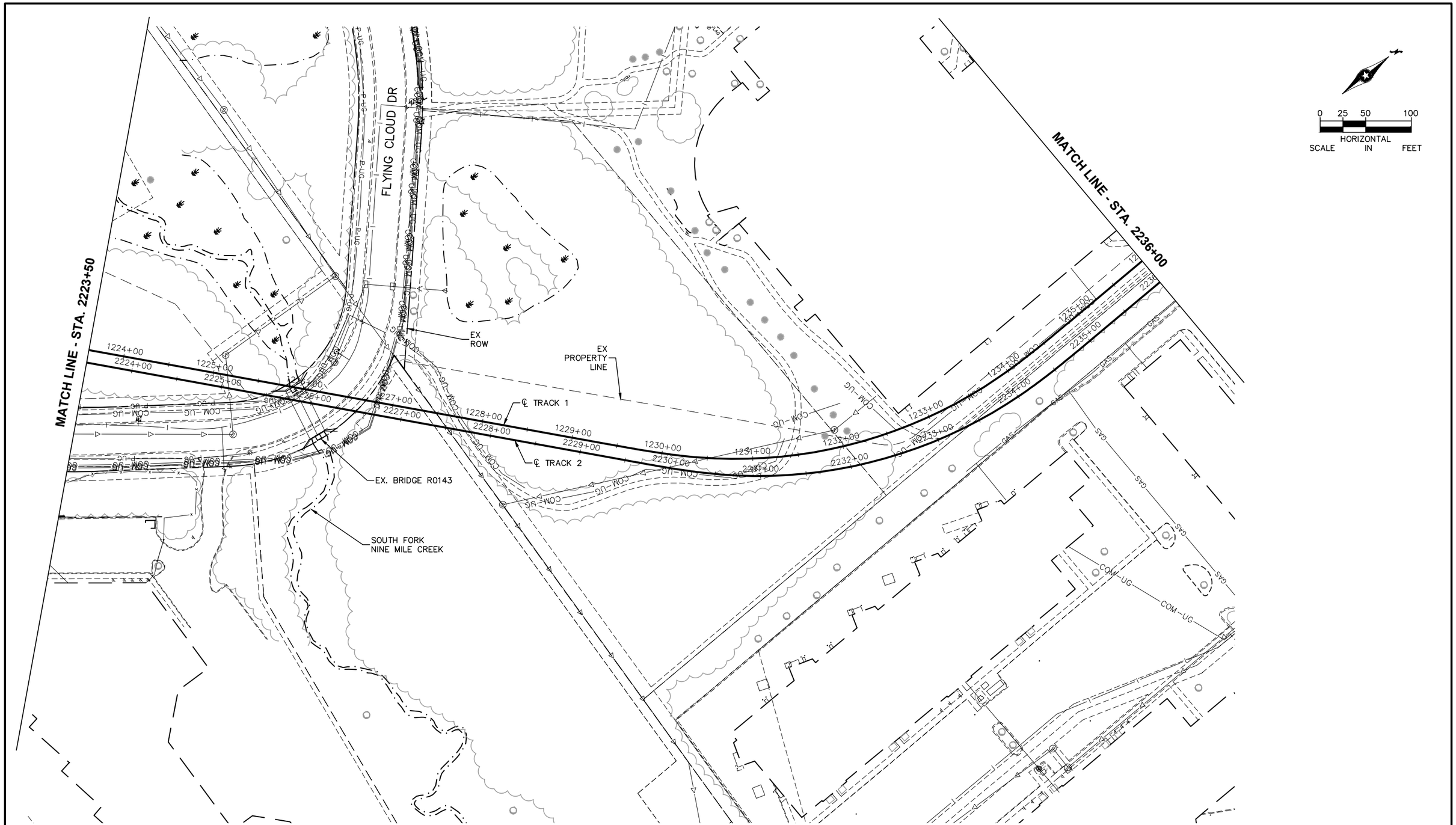

NO.	DATE	BY	CHECK	DESIGN	REVISION / SUBMITTAL
.	.	.	.	.	.
.	.	.	.	.	.
.	.	.	.	.	.
.	.	.	.	.	.
.	.	.	.	.	.
.	.	.	.	.	.
.	.	.	.	.	.
.	.	.	.	.	.
.	.	.	.	.	.

AECOM RANI engineering

PRELIMINARY ENGINEERING

METROPOLITAN COUNCIL SOUTHWEST Green Line LRT

WEST - VOLUME 1 (CIVIL) - SEGMENT 2
EXISTING CONDITIONS
PLAN
STA. 2223+50 TO STA. 2236+00

DISCIPLINE: SURVEY

SHEET NAME: W2-SUR-PLN-002

SHEET 7 OF 107

Jun. 27 2014 10:51 am V:\3200_pec-w\CAD\SEGMENT-W2\LAYOUTS\W2-SUR-PLN.dwg By: jschneider

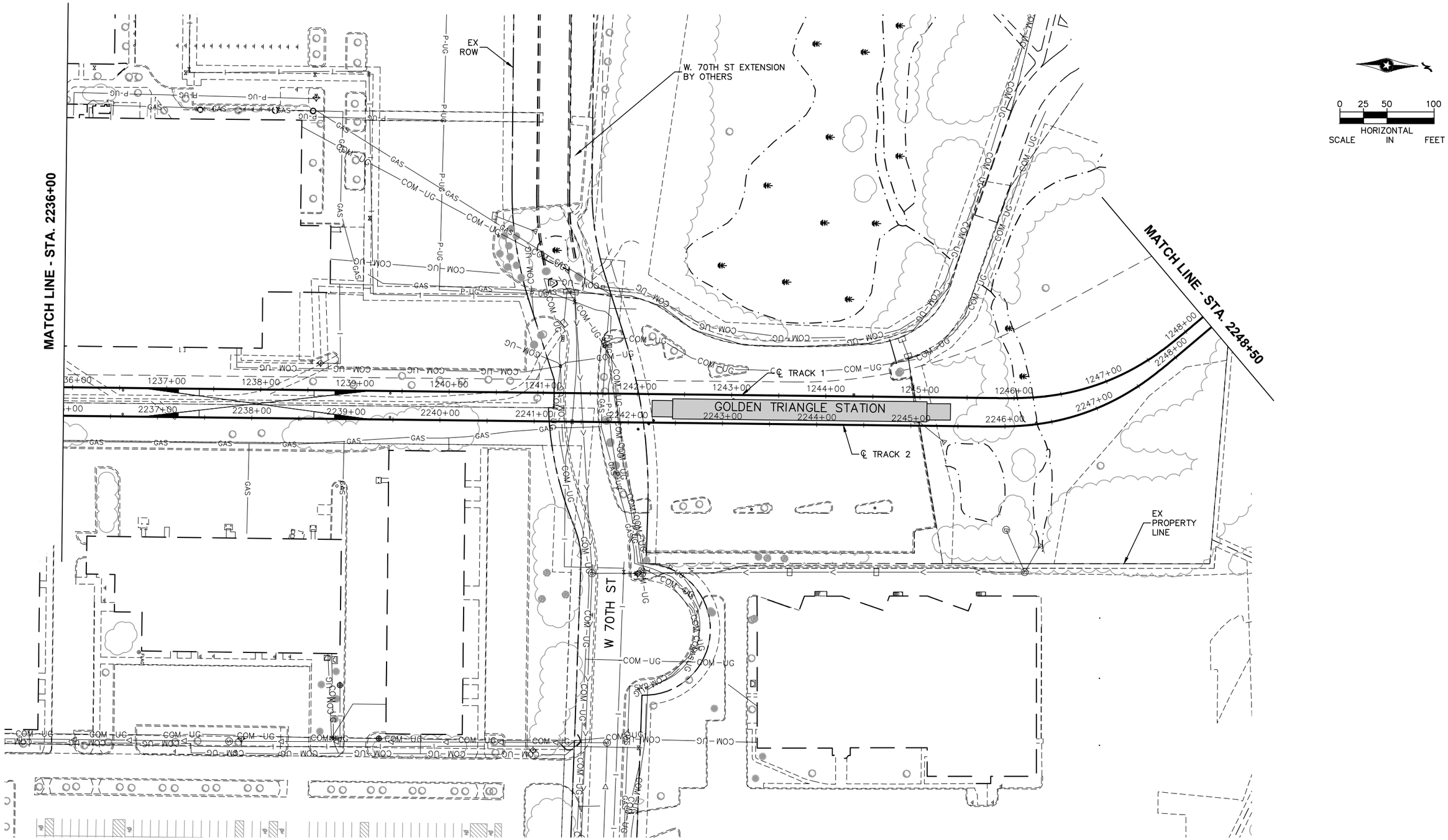

NO.	DATE	BY	CHECK	DESIGN	REVISION / SUBMITTAL
.	.	.	.	.	.
.	.	.	.	.	.
.	.	.	.	.	.
.	.	.	.	.	.
.	.	.	.	.	.
.	.	.	.	.	.
.	.	.	.	.	.
.	.	.	.	.	.
.	.	.	.	.	.

AECOM RANI engineering

PRELIMINARY ENGINEERING

METROPOLITAN COUNCIL SOUTHWEST Green Line LRT

WEST - VOLUME 1 (CIVIL) - SEGMENT 2
EXISTING CONDITIONS
PLAN
STA. 2236+00 TO STA. 2248+50

DISCIPLINE: SURVEY

SHEET NAME: W2-SUR-PLN-003

SHEET 8 OF 107

Jun, 27 2014 10:51 am V:\3200_pec-w\CAD\SEGMENT-W2\LAYOUTS\W2-SUR-PLN.dwg By: jschneider

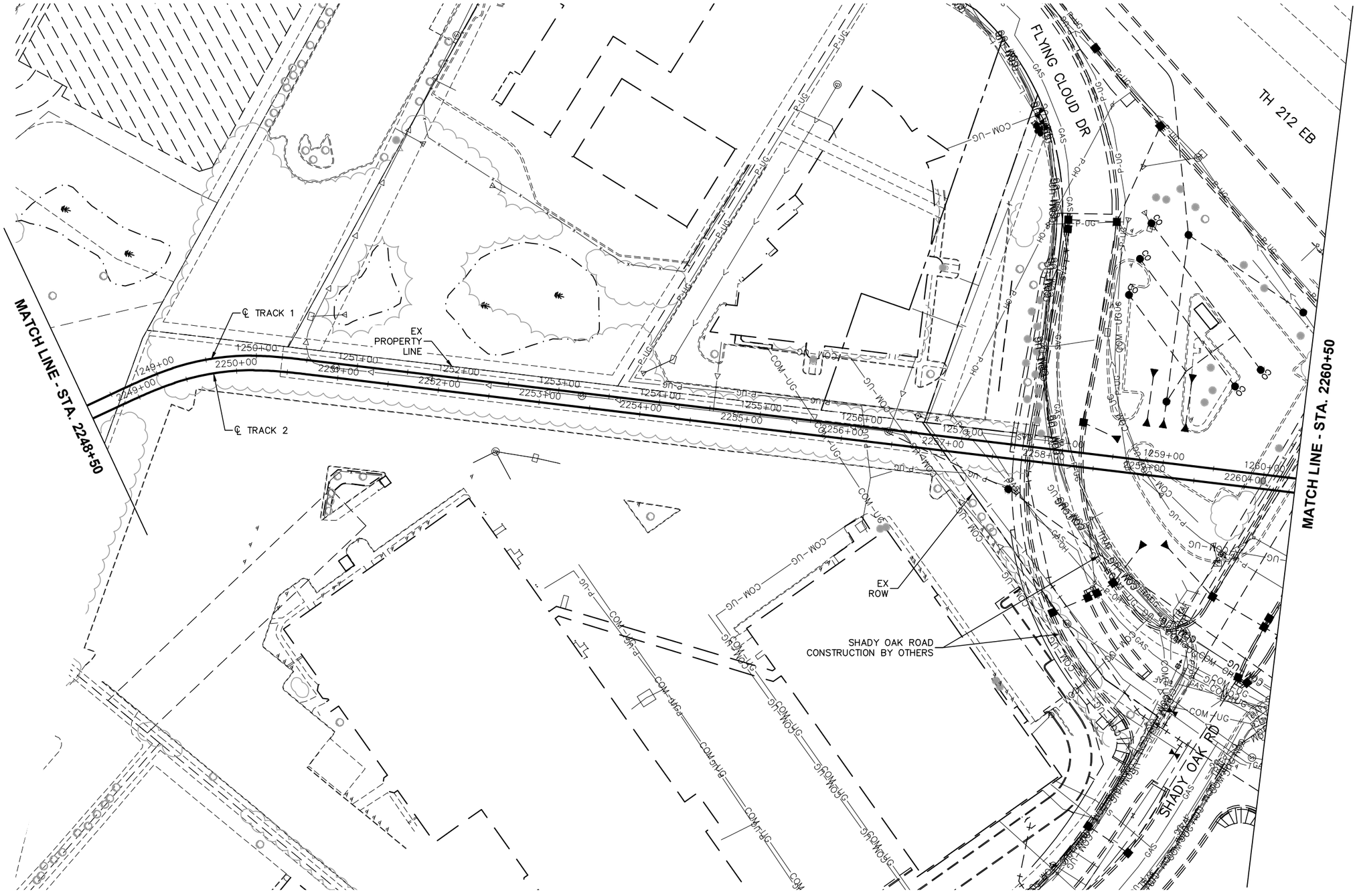

0 25 50 100
HORIZONTAL
SCALE IN FEET

NO.	DATE	BY	CHECK	DESIGN	REVISION / SUBMITTAL
.	.	.	.	.	.
.	.	.	.	.	.
.	.	.	.	.	.
.	.	.	.	.	.
.	.	.	.	.	.
.	.	.	.	.	.
.	.	.	.	.	.
.	.	.	.	.	.
.	.	.	.	.	.

AECOM RANI engineering

PRELIMINARY ENGINEERING

METROPOLITAN COUNCIL SOUTHWEST Green Line LRT

WEST - VOLUME 1 (CIVIL) - SEGMENT 2
EXISTING CONDITIONS
PLAN
STA. 2248+50 TO STA. 2260+50

DISCIPLINE: SURVEY

SHEET NAME: W2-SUR-PLN-004

SHEET 9 OF 107

Jun, 27 2014 10:52 am V:\3200_pec-w\CAD\SEGMENT-W2\LAYOUTS\W2-SUR-PLN.dwg By: jschneider

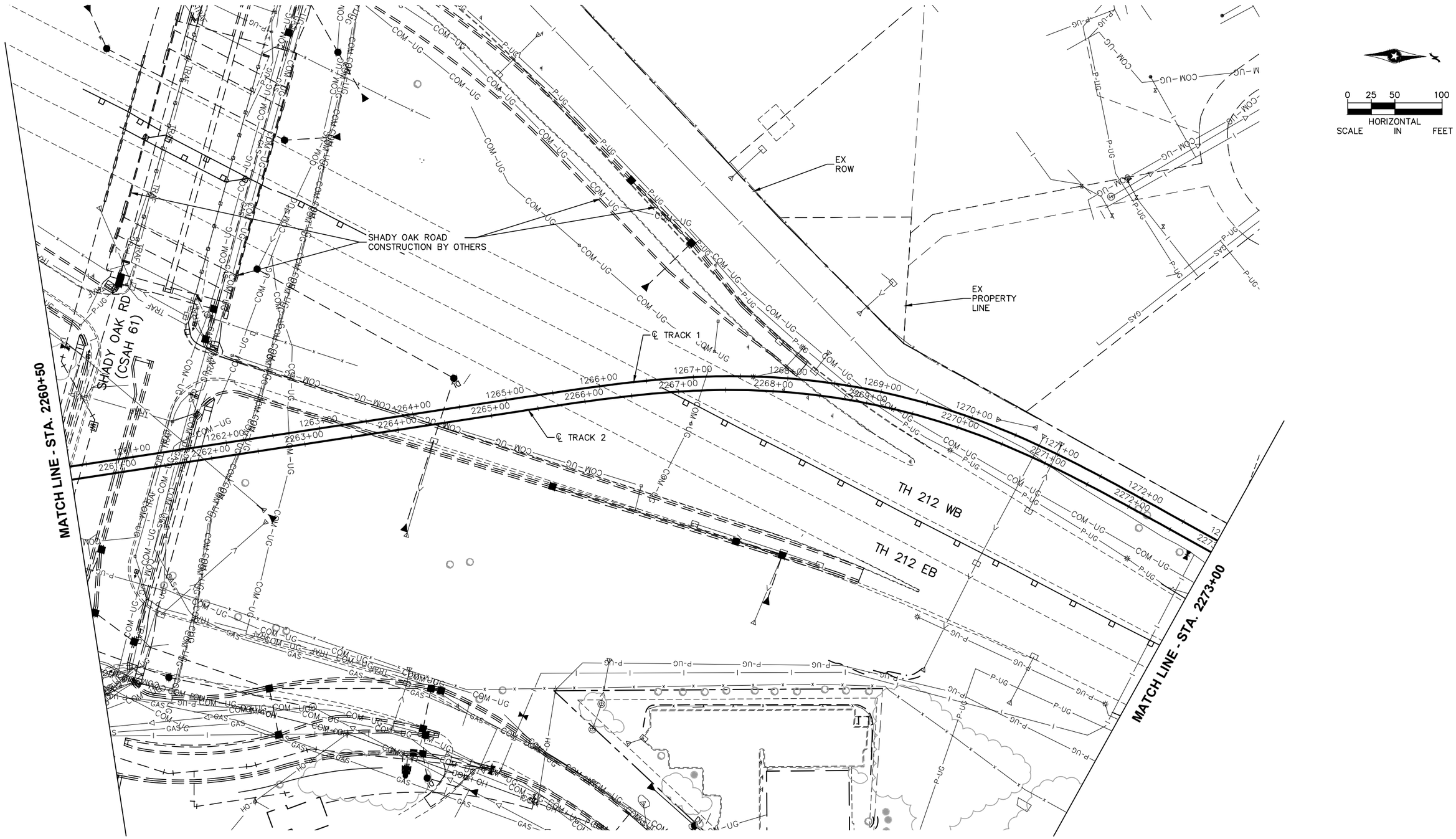

NO.	DATE	BY	CHECK	DESIGN	REVISION / SUBMITTAL
.	.	.	.	.	.
.	.	.	.	.	.
.	.	.	.	.	.
.	.	.	.	.	.
.	.	.	.	.	.
.	.	.	.	.	.
.	.	.	.	.	.
.	.	.	.	.	.
.	.	.	.	.	.
.	.	.	.	.	.

AECOM RANI engineering

PRELIMINARY ENGINEERING

METROPOLITAN COUNCIL SOUTHWEST Green Line LRT

WEST - VOLUME 1 (CIVIL) - SEGMENT 2
EXISTING CONDITIONS
PLAN
STA. 2260+50 TO STA. 2273+00

DISCIPLINE: SURVEY

SHEET NAME: W2-SUR-PLN-005

SHEET 10 OF 107

Jun, 27 2014 10:52 am V:\3200_pec-w\CAD\SEGMENT-W2\LAYOUTS\W2-SUR-PLN.dwg By: jschneider

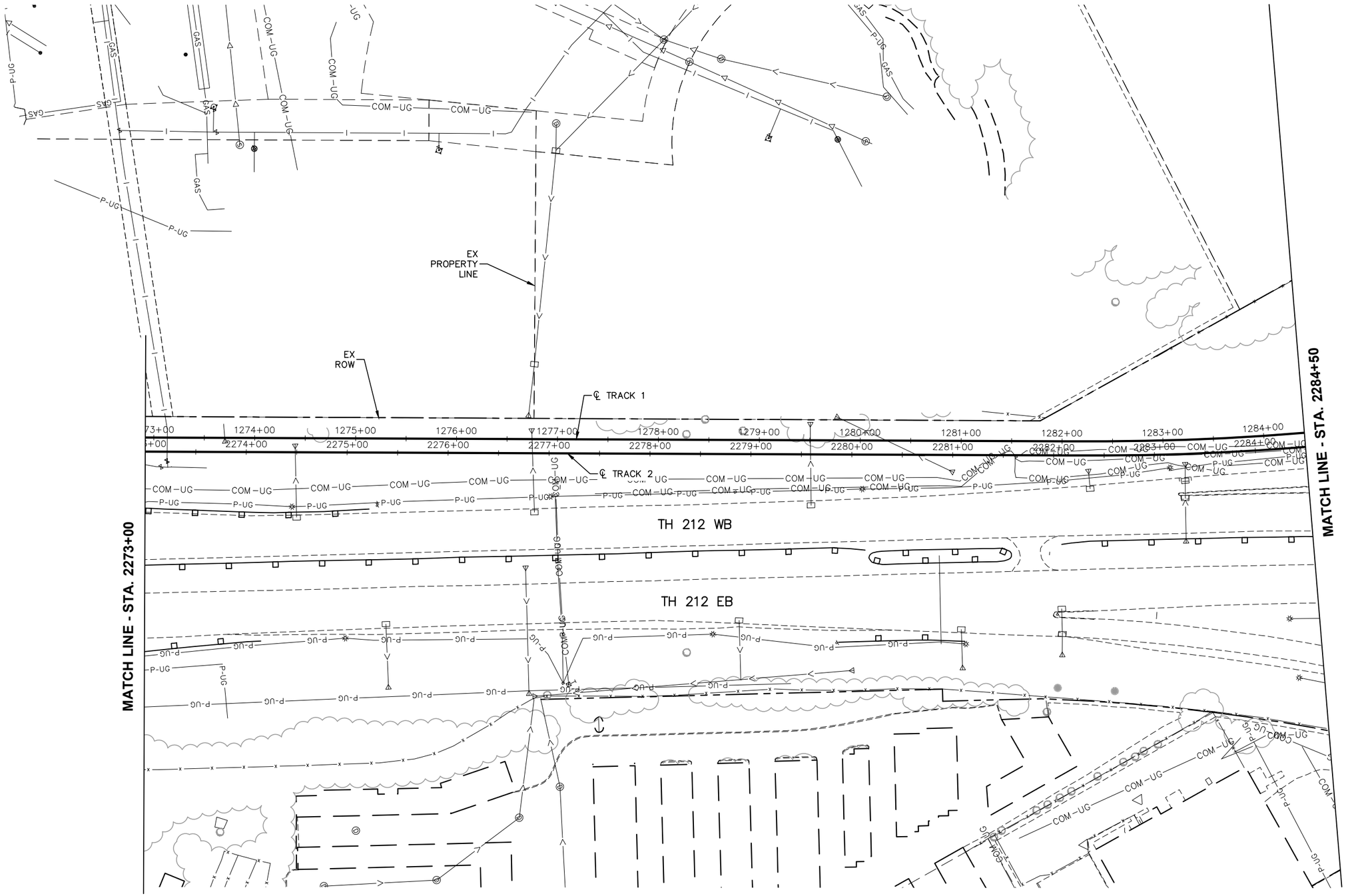

NO.	DATE	BY	CHECK	DESIGN	REVISION / SUBMITTAL
.	.	.	.	.	.
.	.	.	.	.	.
.	.	.	.	.	.
.	.	.	.	.	.
.	.	.	.	.	.
.	.	.	.	.	.
.	.	.	.	.	.
.	.	.	.	.	.
.	.	.	.	.	.

AECOM RANI engineering

PRELIMINARY ENGINEERING

METROPOLITAN COUNCIL SOUTHWEST Green Line LRT

WEST - VOLUME 1 (CIVIL) - SEGMENT 2
EXISTING CONDITIONS
PLAN
STA. 2273+00 TO STA. 2284+50

DISCIPLINE: SURVEY

SHEET NAME: W2-SUR-PLN-006

SHEET 11 OF 107

Jun, 27 2014 10:52 am V:\3200_pec-w\CAD\SEGMENT-W2\LAYOUTS\W2-SUR-PLN.dwg By: jschneider

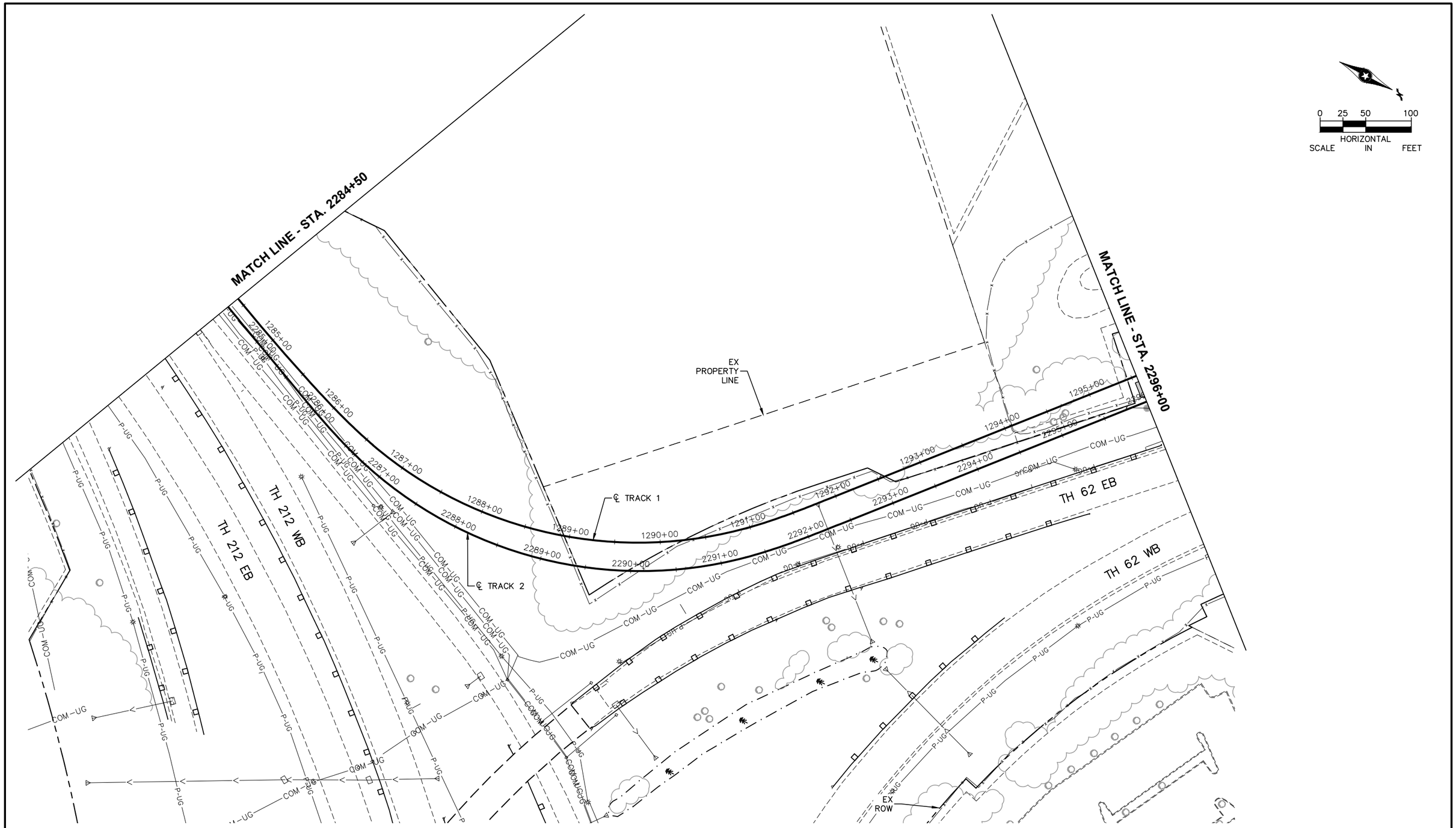

NO.	DATE	BY	CHECK	DESIGN	REVISION / SUBMITTAL
.	.	.	.	.	.
.	.	.	.	.	.
.	.	.	.	.	.
.	.	.	.	.	.
.	.	.	.	.	.
.	.	.	.	.	.
.	.	.	.	.	.
.	.	.	.	.	.
.	.	.	.	.	.
.	.	.	.	.	.

AECOM RANI engineering

PRELIMINARY ENGINEERING

METROPOLITAN COUNCIL SOUTHWEST Green Line LRT

WEST - VOLUME 1 (CIVIL) - SEGMENT 2
EXISTING CONDITIONS
PLAN
STA. 2284+50 TO STA. 2296+00

DISCIPLINE: SURVEY

SHEET NAME: W2-SUR-PLN-007

SHEET 12 OF 107

Jun, 27 2014 10:53 am V:\3200_pec-w\CAD\SEGMENT-W2\LAYOUTS\W2-SUR-PLN.dwg By: jschneider

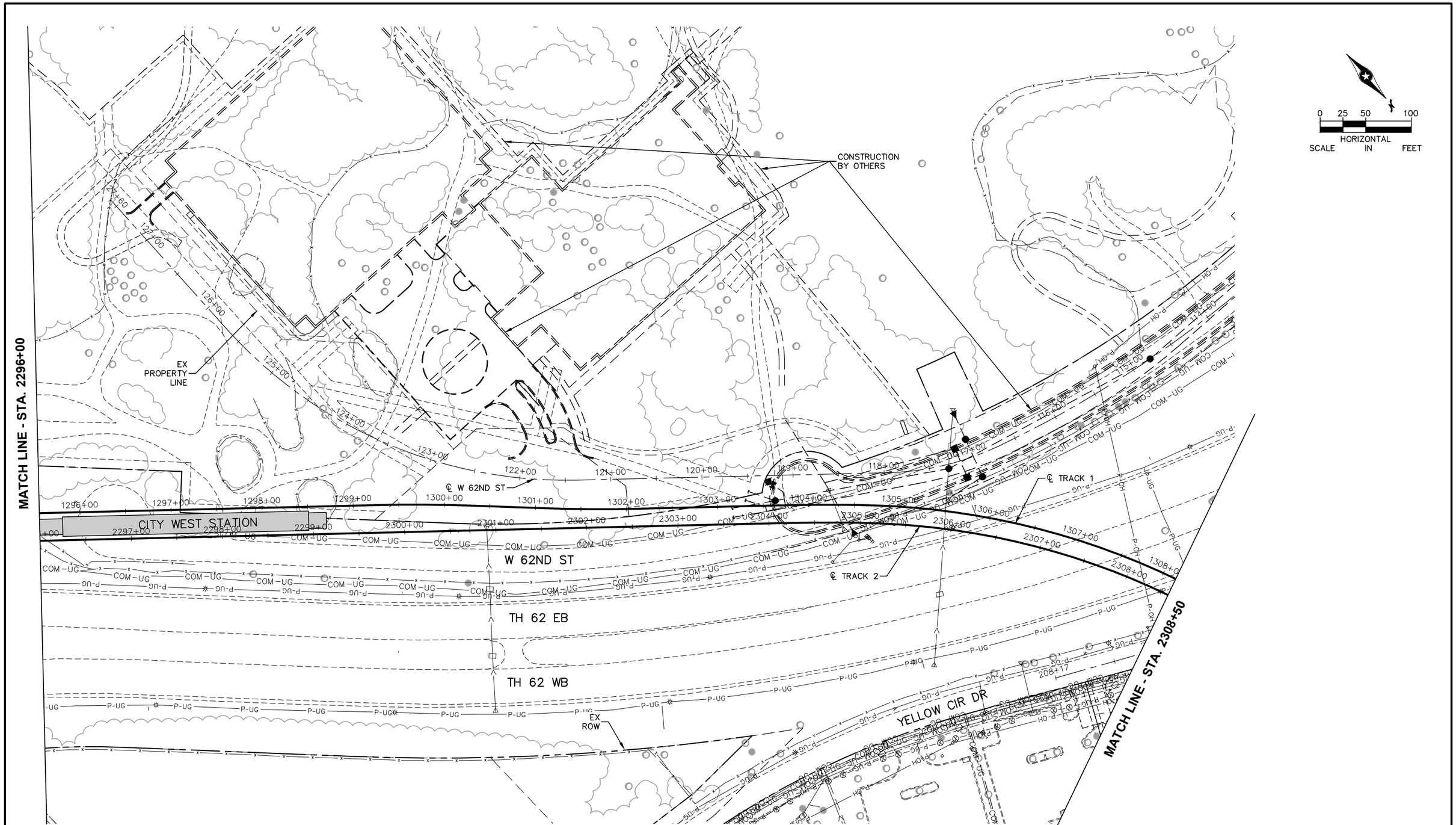

NO.	DATE	BY	CHECK	DESIGN	REVISION / SUBMITTAL
.	.	.	.	.	.
.	.	.	.	.	.
.	.	.	.	.	.
.	.	.	.	.	.
.	.	.	.	.	.
.	.	.	.	.	.
.	.	.	.	.	.
.	.	.	.	.	.
.	.	.	.	.	.

AECOM RANI engineering

PRELIMINARY ENGINEERING

METROPOLITAN COUNCIL SOUTHWEST Green Line LRT

WEST - VOLUME 1 (CIVIL) - SEGMENT 2
EXISTING CONDITIONS
PLAN
STA. 2296+00 TO STA. 2308+50

DISCIPLINE: SURVEY

SHEET NAME: W2-SUR-PLN-008

SHEET 13 OF 107

Jun, 27 2014 10:53 am V:\3200_pec-w\CAD\SEGMENT-W2\LAYOUTS\W2-SUR-PLN.dwg By: jschneider

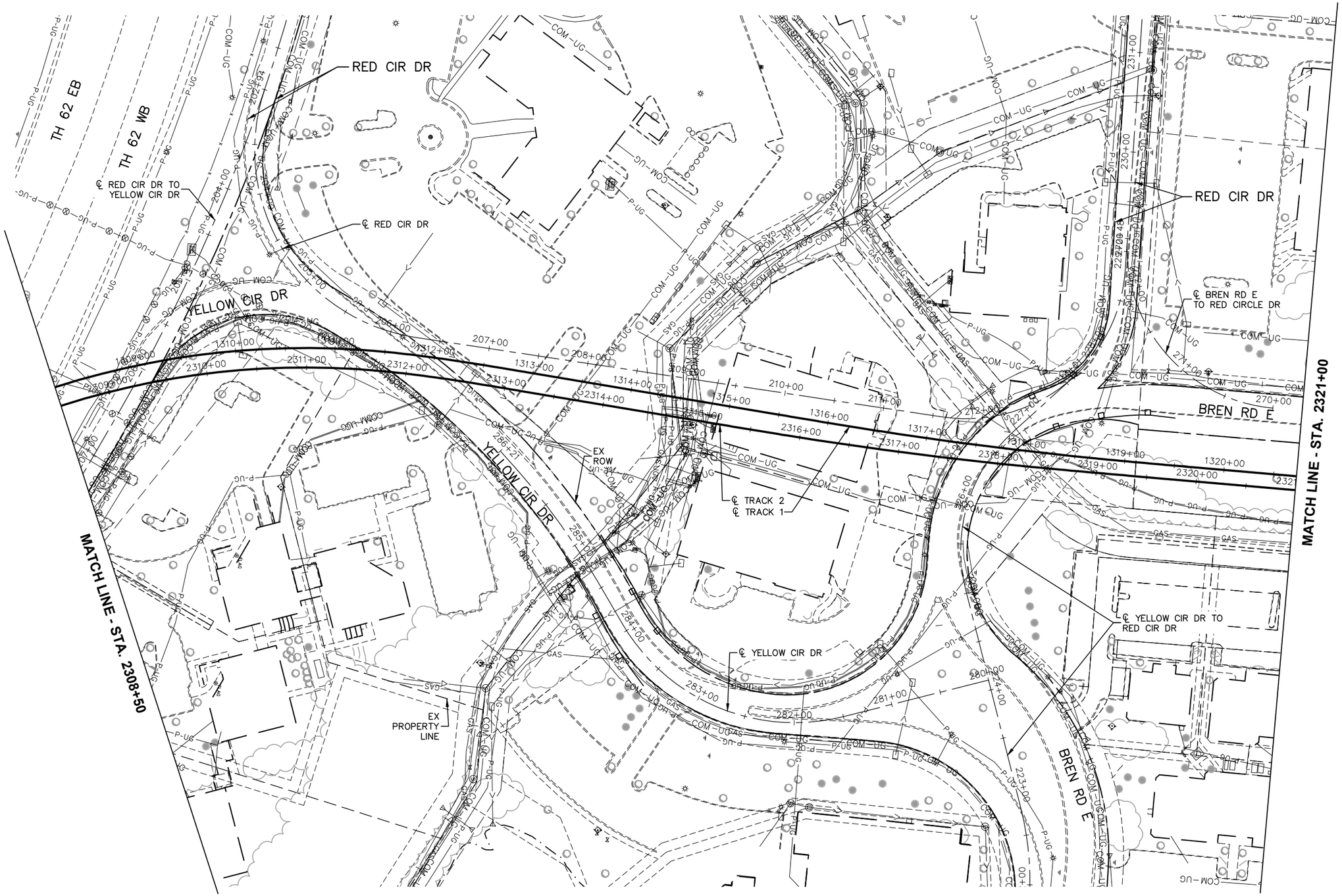

NO.	DATE	BY	CHECK	DESIGN	REVISION / SUBMITTAL
.	.	.	.	.	.
.	.	.	.	.	.
.	.	.	.	.	.
.	.	.	.	.	.
.	.	.	.	.	.
.	.	.	.	.	.
.	.	.	.	.	.
.	.	.	.	.	.
.	.	.	.	.	.
.	.	.	.	.	.

AECOM RANI engineering

PRELIMINARY ENGINEERING

METROPOLITAN COUNCIL SOUTHWEST Green Line LRT

WEST - VOLUME 1 (CIVIL) - SEGMENT 2
EXISTING CONDITIONS
PLAN
STA. 2308+50 TO STA. 2321+00

DISCIPLINE: SURVEY

SHEET NAME: W2-SUR-PLN-009

SHEET 14 OF 107

Jun, 27 2014 10:53 am V:\3200_pec-w\CAD\SEGMENT-W2\LAYOUTS\W2-SUR-PLN.dwg By: jschneider

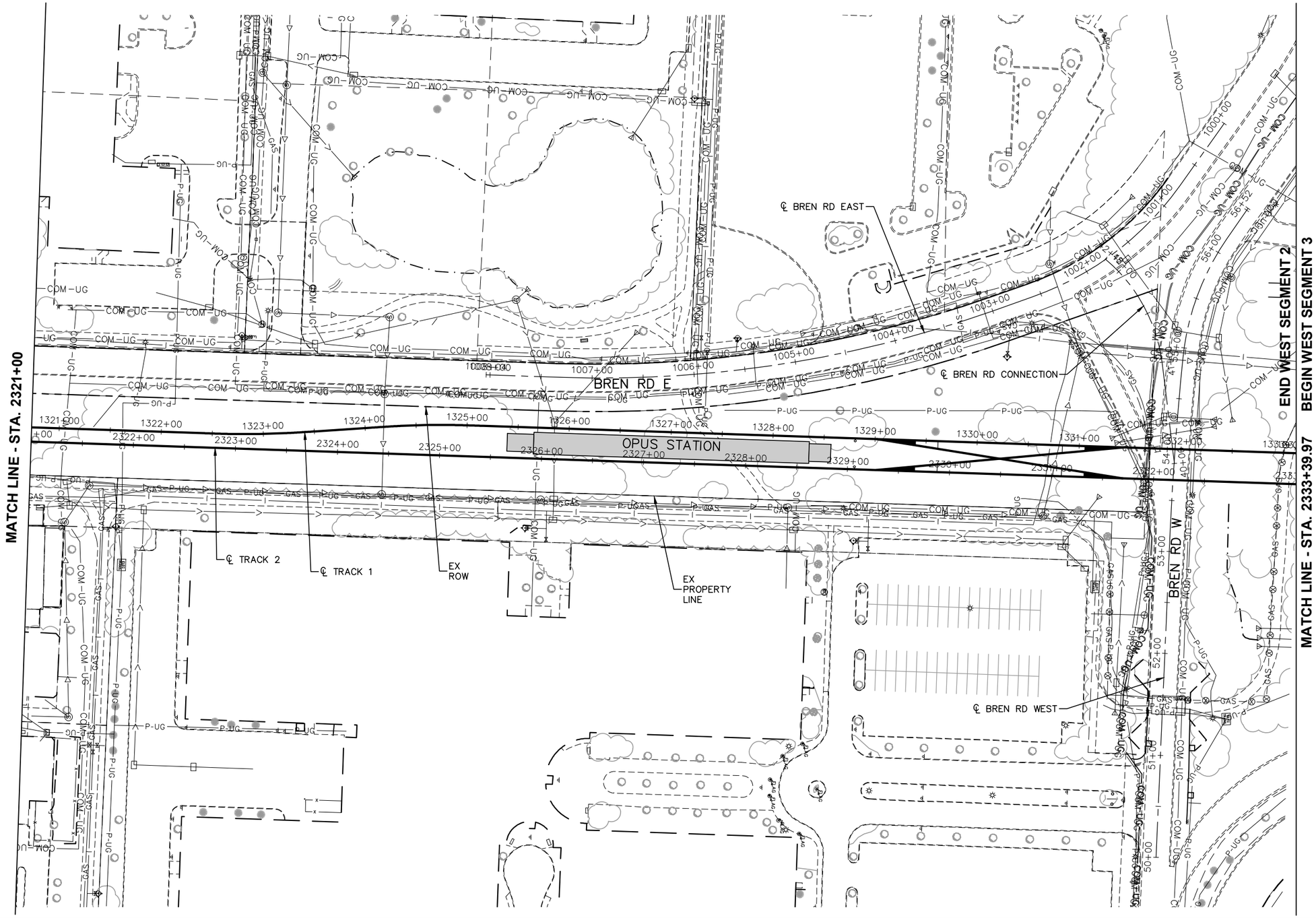

0 25 50 100
HORIZONTAL
SCALE IN FEET

NO.	DATE	BY	CHECK	DESIGN	REVISION / SUBMITTAL
.	.	.	.	.	.
.	.	.	.	.	.
.	.	.	.	.	.
.	.	.	.	.	.
.	.	.	.	.	.
.	.	.	.	.	.
.	.	.	.	.	.
.	.	.	.	.	.
.	.	.	.	.	.

AECOM RANI engineering

PRELIMINARY ENGINEERING

METROPOLITAN COUNCIL SOUTHWEST Green Line LRT

WEST - VOLUME 1 (CIVIL) - SEGMENT 2
EXISTING CONDITIONS
PLAN
STA. 2321+00 TO STA. 2333+39.97

DISCIPLINE: SURVEY

SHEET NAME: W2-SUR-PLN-010

SHEET 15 OF 107

Jun, 27 2014 10:54 am V:\3200_pec-w\CAD\SEGMENT-W2\LAYOUTS\W2-SUR-PLN.dwg By: jschneider

TRACK LINETYPES

- TRACK ℄
- RETAINING WALL
- TUNNEL WALL
- ROADWAY ℄
- FENCE
- BALLAST CURB

TRACK SYMBOLS

- PROPOSED SIGNALIZED INTERSECTION
- EXISTING SIGNALIZED INTERSECTION
- PROPOSED DIRECTIONAL LANE USE
- EXISTING DIRECTIONAL LANE USE
- AUTOMATIC GATE
- RAIL TURNOUT
- RAIL CROSSOVER (DOUBLE)
- RAIL CROSSOVER (SINGLE)
- POINT OF SWITCH (PS)
- W2-200 — RAILROAD CURVE NUMBER

NOTE:
ALL TURNOUTS AND CROSSOVERS TO BE EQUIPPED WITH POWER SWITCH MACHINES AND SWITCH HEATERS

CIVIL LINETYPES

- ROADWAY ℄
- TRACK ℄
- CONCRETE CURB AND GUTTER
- TRAIL
- SIDEWALK
- DRIVEWAY
- BRIDGE
- RETAINING WALL
- TUNNEL WALL
- CROSSWALK
- STOP BAR
- MEDIAN NOSE
- SAWCUT
- FENCE
- LIMITS OF DISTURBANCE
- CONCRETE SIDEWALK JOINTING

CIVIL SYMBOLS

- ACCESSIBLE PEDESTRIAN CURB RAMP (DESIGN VARIES)
- PROPOSED SIGNALIZED INTERSECTION
- EXISTING SIGNALIZED INTERSECTION
- PROPOSED DIRECTIONAL LANE USE
- EXISTING DIRECTIONAL LANE USE
- AUTOMATIC GATE
- HANDICAP PARKING STALL
- TACTILE WARNING STRIP
- TPSS BUILDING (TPSS-SW-##)
- SIGNAL OR INTERMEDIATE OR PLATFORM OR XING OR TUNNEL HOUSE OR ANY COMBINATION OF THESE

ABBREVIATIONS

AD	ALGEBRAIC DIFFERENCE	OCS	OVERHEAD CONTACT SYSTEM
AVE	AVENUE	OH	OVERHEAD
BGN	BEGIN	PC	POINT OF CURVE
BVCE	BEGINNING VERTICAL CURVE ELEVATION	PE	PROPOSED EASEMENT
BVCS	BEGINNING VERTICAL CURVE STATION	PITO	POINT OF INTERSECTION OF TURNOUT
BLVD	BOULEVARD	PKWY	PARKWAY
BNSF	BURLINGTON NORTHERN SANTA FE RAILWAY	POT	POINT ON TANGENT
C&G	CURB AND GUTTER	PROP	PROPOSED
℄	CENTERLINE	PS	POINT OF SWITCH
CP	CANADIAN PACIFIC	PT	POINT OF TANGENT
CPRAIL	CANADIAN PACIFIC RAILWAY	PVI	POINT OF VERTICAL INTERSECTION
CS	CURVE TO SPIRAL	R	RADIUS (FEET)
CSAH	COUNTY STATE AID HIGHWAY	r	RATE OF CHANGE VERTICAL CURVE
DF	DIRECT FIXATION	RH	RIGHT HAND
DR	DRIVE	ROW	RIGHT OF WAY
Ea	ACTUAL SUPERELEVATION (INCHES)	S	SOUTH
EB	EAST BOUND	SB	SOUTH BOUND
ELEV	ELEVATION	SC	SPIRAL TO CURVE
Eu	UNBALANCED SUPERELEVATION (INCHES)	SIG-COMM	SIGNAL COMMUNICATION
EVCE	ENDING VERTICAL CURVE ELEVATION	ST	STREET
EVCS	ENDING VERTICAL CURVE STATION	ST	SPIRAL TO TANGENT
EX	EXISTING	STA	STATION
HCRRA	HENNEPIN COUNTY REGIONAL RAILROAD AUTHORITY	TCE	TEMPORARY CONSTRUCTION EASEMENT
LH	LEFT HAND	TOR	TOP OF RAIL
Ls	SPIRAL LENGTH (FEET)	TPSS	TRACTION POWER SUBSTATION
MPLS	CITY OF MINNEAPOLIS	TRK	TRACK
MPRB	MINNEAPOLIS PARK AND RECREATION BOARD	TS	TANGENT TO SPIRAL
N	NORTH	UG	UNDERGROUND
NB	NORTH BOUND	V	DESIGN VELOCITY (MPH)
NO	NUMBER	WB	WEST BOUND

TRAIL INDEX

ABBREVIATED NAME	FULL NAME/LOCATION
MN RIVER BLUFFS TRAIL	MINNESOTA RIVER BLUFFS LRT REGIONAL TRAIL/WEST OF EXCELSIOR
CEDAR LAKE TRAIL	CEDAR LAKE LRT REGIONAL TRAIL/EAST OF EXCELSIOR
TRAIL A	NOT USED
TRAIL B	NOT USED
TRAIL C	10' CONNECTOR TRAIL FROM CEDAR LAKE TRAIL TO TYLER AVE.
TRAIL D	10' CONNECTOR TRAIL/BELTLINE STATION
KENILWORTH TRAIL	KENILWORTH TRAIL (MAIN)/W LAKE ST TO PENN STATION
TRAIL E	KENILWORTH TRAIL (SECONDARY)/W LAKE ST TO CEDAR LAKE PKWY
TRAIL F	KENILWORTH TRAIL (SECONDARY)/WEST OF PENN STATION
TRAIL F	NORTH CEDAR LAKE TRAIL (SECONDARY)/EAST OF PENN STATION
TRAIL G	KENILWORTH TRAIL (SECONDARY)/WEST OF PENN STATION
TRAIL G	NORTH CEDAR LAKE TRAIL (SECONDARY)/EAST OF PENN STATION
TRAIL H	10' CONNECTOR TRAIL/EAST OF PENN STATION TO KENWOOD PKWY
TRAIL I	NORTH CEDAR LAKE TRAIL (MAIN) ON BRIDGE OVER LIGHT RAIL
TRAIL J	NORTH CEDAR LAKE TRAIL (SECONDARY)/NORTHWEST OF PENN STATION
TRAIL K	NORTH CEDAR LAKE TRAIL (SECONDARY)/NORTHWEST OF PENN STATION
TRAIL L	20' CONNECTOR TRAIL/VAN WHITE STATION
TRAIL M	NORTH CEDAR LAKE TRAIL (SECONDARY)/EAST OF I-94
TRAIL N	8' CONNECTOR TRAIL FROM CEDAR LAKE TRAIL TO EDGEBROOK DRIVE
TRAIL O	8' CONNECTOR TRAIL FROM CEDAR LAKE TRAIL TO W. LAKE STREET
TRAIL P	8' CONNECTOR TRAIL FROM CEDAR LAKE TRAIL TO LOUISIANA AVE.
TRAIL Q	10' CONNECTOR TRAIL FROM CEDAR LAKE TRAIL TO T.H. 7 SERVICE ROAD

NO.	DATE	BY	CHECK	DESIGN	REVISION / SUBMITTAL
.	.	.	.	.	.
.	.	.	.	.	.
.	.	.	.	.	.
.	.	.	.	.	.
.	.	.	.	.	.
.	.	.	.	.	.
.	.	.	.	.	.
.	.	.	.	.	.
.	.	.	.	.	.

AECOM

PRELIMINARY ENGINEERING

METROPOLITAN COUNCIL

SOUTHWEST Green Line LRT Extension

WEST - VOLUME 1 (CIVIL) - SEGMENT 2
TRACK AND CIVIL
LEGEND AND ABBREVIATIONS

DISCIPLINE: TRACK

SHEET NAME: W2-TRK-NTS-001

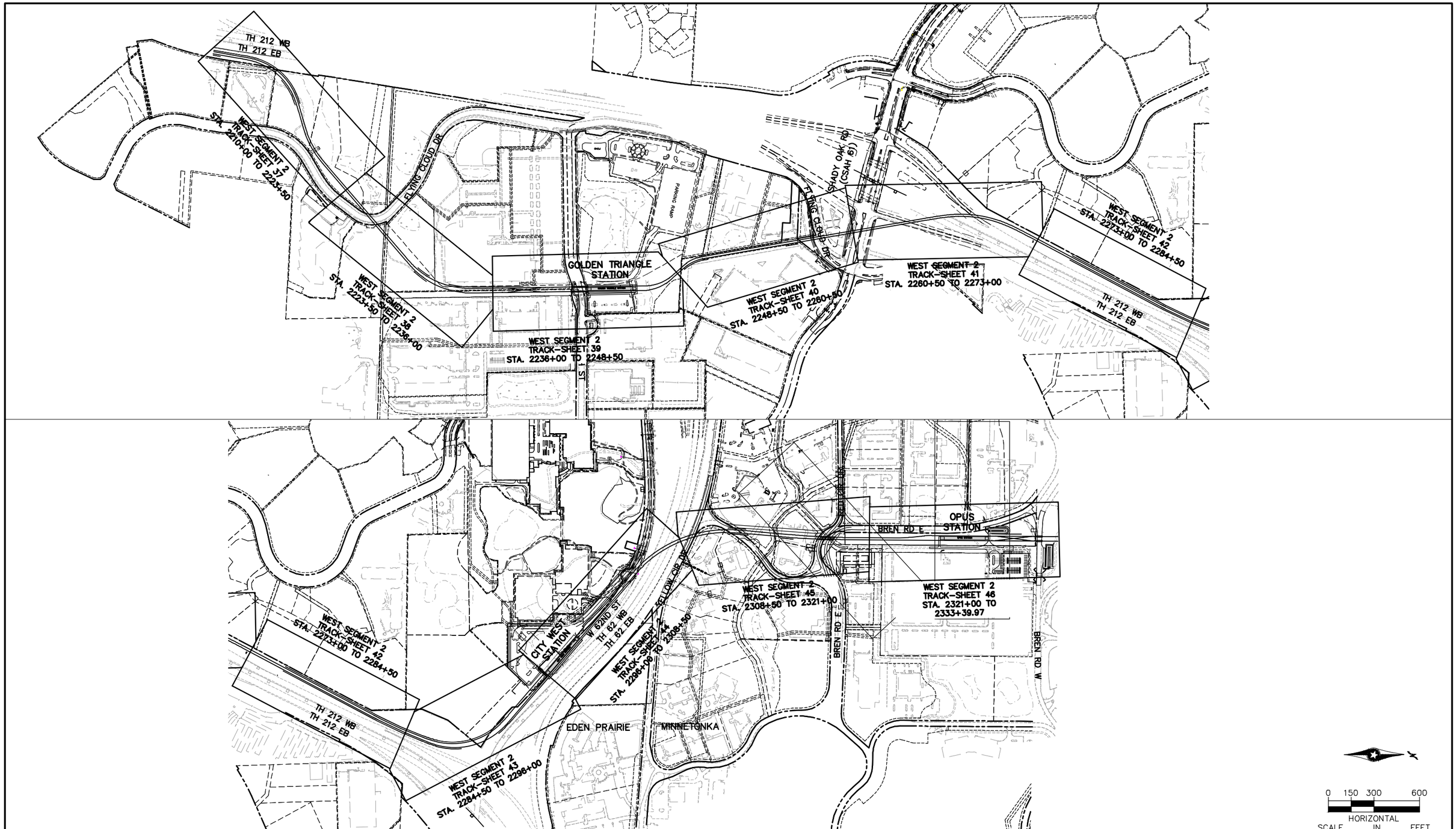

NO.	DATE	BY	CHECK	DESIGN	REVISION / SUBMITTAL
.	.	.	.	.	.
.	.	.	.	.	.
.	.	.	.	.	.
.	.	.	.	.	.
.	.	.	.	.	.
.	.	.	.	.	.
.	.	.	.	.	.
.	.	.	.	.	.

AECOM SRF Consulting Group, Inc.

PRELIMINARY ENGINEERING

METROPOLITAN COUNCIL SOUTHWEST Green Line LRT Extension

WEST - VOLUME 1 (CIVIL) - SEGMENT 2 TRACK SHEET INDEX

DISCIPLINE: TRACK

SHEET NAME: W2-TRK-IDX-001

SHEET 17 OF 107

Jun, 27 2014 09:35 am V:\3200_PEC-W\CAD\SEGMENT-W2\SHEET\TRACK\W2-TRK-IDX.dwg By: Konenj

NOTE:
1. TRACK CENTERS WIDEN FROM 14.00' TO 21.67' BETWEEN STA. 2229+40 AND STA. 2231+50.
2. TRACK CENTERS WIDEN FROM 14.00' TO 30.38' BETWEEN STA. 2282+13 AND STA. 2292+38.
3. TRACK CENTERS NARROW FROM 30.28' TO 19.50' BETWEEN STA. 2299+90 AND STA. 2302+70.
4. FOR INSETS, SEE SHEET 31.
5. TRAIL NOT DEPICTED, REFER TO CIVIL DRAWINGS.
6. FOR DUCTBANK CONFIGURATION, SEE SYSTEMS PLANS.

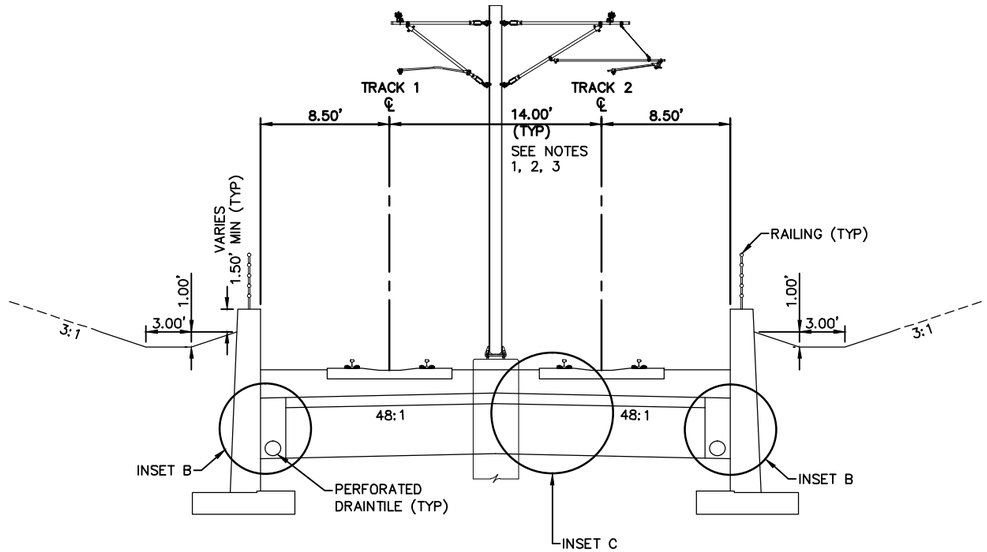

TYPICAL SECTION

STA. 2210+00 TO STA. 2210+50
STA. 2215+00 TO STA. 2216+94
STA. 2230+45 TO STA. 2231+50 SEE NOTE 5
STA. 2275+41 TO STA. 2288+36
STA. 2291+00 TO STA. 2292+00
STA. 2299+90 TO STA. 2304+71
STA. 2311+69 TO STA. 2312+84

0 2.5 5 10
HORIZONTAL
SCALE IN FEET

NO.	DATE	BY	CHECK	DESIGN	REVISION / SUBMITTAL
.	.	.	.	.	.
.	.	.	.	.	.
.	.	.	.	.	.
.	.	.	.	.	.
.	.	.	.	.	.
.	.	.	.	.	.
.	.	.	.	.	.
.	.	.	.	.	.
.	.	.	.	.	.

AECOM

PRELIMINARY ENGINEERING

METROPOLITAN COUNCIL

SOUTHWEST Green Line LRT Extension

WEST - VOLUME 1 (CIVIL) - SEGMENT 2
TRACK
TYPICAL SECTIONS

DISCIPLINE: TRACK

SHEET NAME: W2-TRK-TYP-001

SHEET 18 OF 107

Jun, 27 2014 09:35 am V:\3200_PEC-W\CAD\SEGMENT-W2\SHEET\TRACK\W2-TRK-TYPC.dwg By: Konenj

NOTE:
1. FOR INSETS, SEE SHEET 31.
2. TRAIL NOT DEPICTED, REFER TO CIVIL DRAWINGS.
3. TRACK CENTERS WIDEN FROM 28.04' TO 31.16' BETWEEN STA. 2288+36 AND STA. 2291+00.
4. FOR DUCTBANK CONFIGURATION, SEE SYSTEMS PLANS.

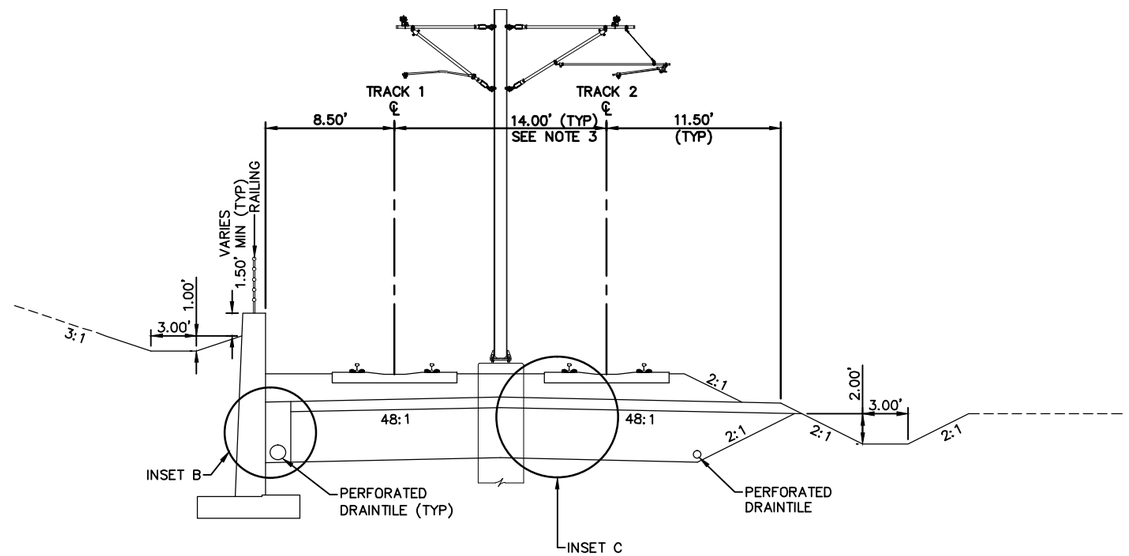

TYPICAL SECTION
STA. 2210+50 TO STA. 2215+00
STA. 2288+36 TO STA. 2291+00

0 2.5 5 10
HORIZONTAL
SCALE IN FEET

NO.	DATE	BY	CHECK	DESIGN	REVISION / SUBMITTAL
.	.	.	.	.	.
.	.	.	.	.	.
.	.	.	.	.	.
.	.	.	.	.	.
.	.	.	.	.	.
.	.	.	.	.	.
.	.	.	.	.	.
.	.	.	.	.	.
.	.	.	.	.	.

AECOM

PRELIMINARY ENGINEERING

METROPOLITAN COUNCIL

SOUTHWEST Green Line LRT Extension

WEST - VOLUME 1 (CIVIL) - SEGMENT 2
TRACK
TYPICAL SECTIONS

DISCIPLINE: TRACK

SHEET NAME: W2-TRK-TYP-002

SHEET 19 OF 107

Jun, 27 2014 09:36 am V:\3200_PEC-W\CAD\SEGMENT-W2\SHEET\TRACK\W2-TRK-TYPC.dwg By: Konenj

NOTE:
1. DIRECT FIXATION TRACK ON BRIDGE.
2. FOR DUCTBANK CONFIGURATION, SEE SYSTEMS PLANS.

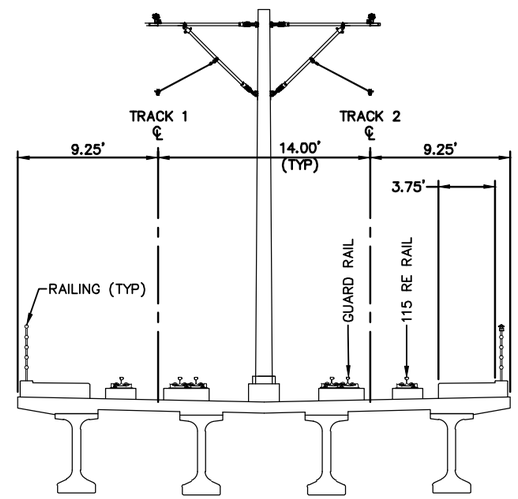

TYPICAL SECTION
STA. 2216+94 TO STA. 2230+45
STA. 2253+91 TO STA. 2275+41

0 2.5 5 10
HORIZONTAL
SCALE IN FEET

NO.	DATE	BY	CHECK	DESIGN	REVISION / SUBMITTAL
.	.	.	.	.	.
.	.	.	.	.	.
.	.	.	.	.	.
.	.	.	.	.	.
.	.	.	.	.	.
.	.	.	.	.	.
.	.	.	.	.	.
.	.	.	.	.	.
.	.	.	.	.	.

AECOM

PRELIMINARY ENGINEERING

METROPOLITAN COUNCIL

SOUTHWEST Green Line LRT Extension

WEST - VOLUME 1 (CIVIL) - SEGMENT 2
TRACK
TYPICAL SECTIONS

DISCIPLINE: TRACK

SHEET NAME: W2-TRK-TYP-003

SHEET 20 OF 107

Jun, 27 2014 09:36 am V:\3200_PEC-W\CAD\SEGMENT-W2\SHEET\TRACK\W2-TRK-TYPC.dwg By: Konenjl

NOTE:
1. TRACK CENTERS WIDEN FROM 22.67' TO 27.14' BETWEEN STA. 2231+50 AND STA. 2232+99.
2. FOR INSETS, SEE SHEET 31.
3. TRAIL NOT DEPICTED, REFER TO CIVIL DRAWINGS.
4. FOR DUCTBANK CONFIGURATION, SEE SYSTEMS PLANS.

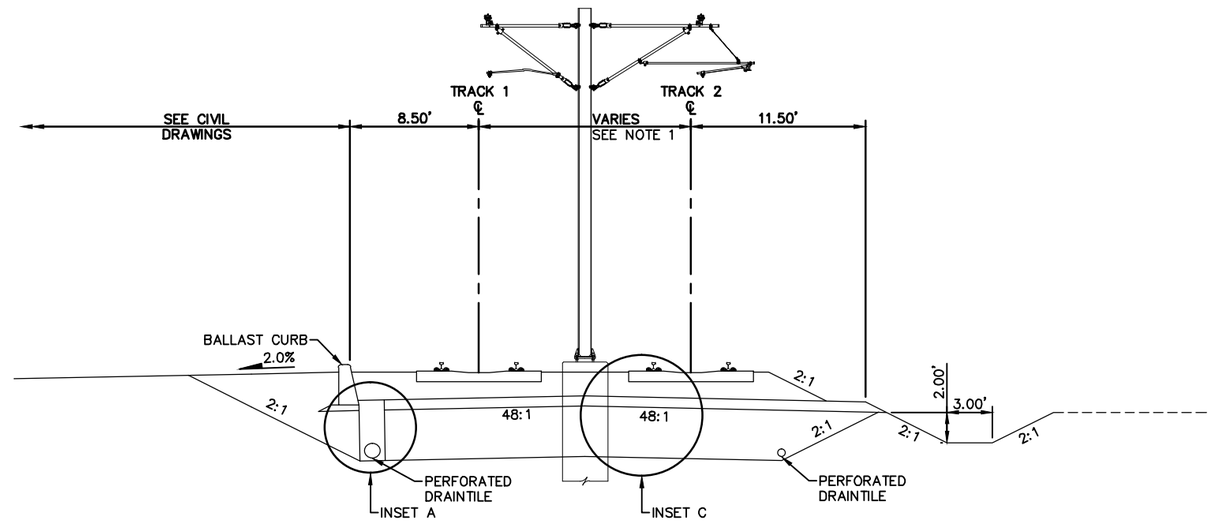

TYPICAL SECTION
STA. 2231+50 TO STA. 2232+99

0 2.5 5 10
HORIZONTAL SCALE IN FEET

NO.	DATE	BY	CHECK	DESIGN	REVISION / SUBMITTAL
.	.	.	.	.	.
.	.	.	.	.	.
.	.	.	.	.	.
.	.	.	.	.	.
.	.	.	.	.	.
.	.	.	.	.	.
.	.	.	.	.	.
.	.	.	.	.	.
.	.	.	.	.	.

AECOM

PRELIMINARY ENGINEERING

METROPOLITAN COUNCIL

SOUTHWEST Green Line LRT Extension

WEST - VOLUME 1 (CIVIL) - SEGMENT 2
TRACK
TYPICAL SECTIONS

DISCIPLINE: TRACK

SHEET NAME: W2-TRK-TYP-004

SHEET 21 OF 107

Jun, 27 2014 09:36 am V:\3200_PEC-W\CAD\SEGMENT-W2\SHEET\TRACK\W2-TRK-TYPC.dwg By: Konenji

NOTE:
1. TRACK CENTERS WIDEN FROM 27.14' TO 30.38' BETWEEN STA. 2232+99 AND STA. 2235+03.
2. FOR INSETS, SEE SHEET 31.
3. NO. 8 DOUBLE CROSSOVER FROM STA. 2329+07 TO STA. 2331+91 NOT DEPICTED.
4. RETAINING WALL FROM STA. 2329+02 TO STA. 2331+00 IS OFFSET 13.67' FROM ℄ TRACK 1.
5. OCS POLES LOCATED INSIDE OF TRACKS BETWEEN STA. 2232+99 TO STA. 2238+00.
6. FOR DUCTBANK CONFIGURATION, SEE SYSTEMS PLANS.

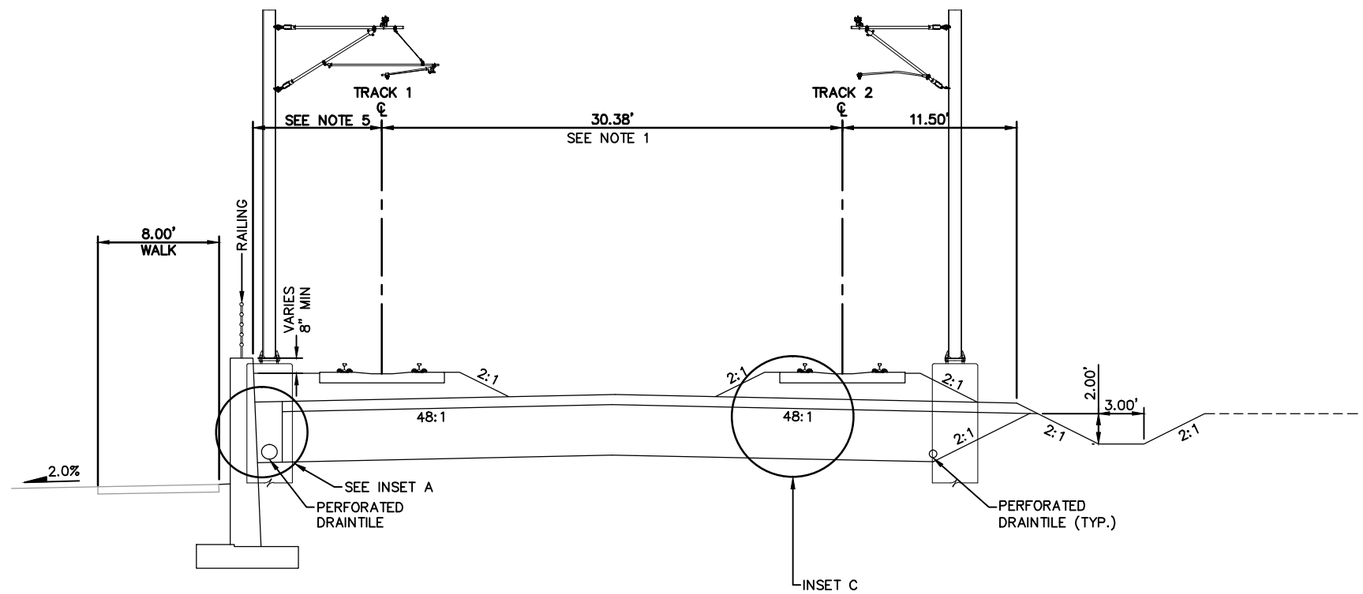

TYPICAL SECTION
STA. 2232+99 TO STA. 2238+00
STA. 2329+02 TO STA. 2331+00 SEE NOTE 3

0 2.5 5 10
HORIZONTAL
SCALE IN FEET

NO.	DATE	BY	CHECK	DESIGN	REVISION / SUBMITTAL
.	.	.	.	.	.
.	.	.	.	.	.
.	.	.	.	.	.
.	.	.	.	.	.
.	.	.	.	.	.
.	.	.	.	.	.
.	.	.	.	.	.
.	.	.	.	.	.
.	.	.	.	.	.

AECOM

PRELIMINARY ENGINEERING

METROPOLITAN COUNCIL

SOUTHWEST Green Line LRT Extension

WEST - VOLUME 1 (CIVIL) - SEGMENT 2
TRACK
TYPICAL SECTIONS

DISCIPLINE: TRACK

SHEET NAME: W2-TRK-TYP-005

SHEET 22 OF 107

Jun, 27 2014 09:36 am V:\3200_PEC-W\CAD\SEGMENT-W2\SHEET\TRACK\W2-TRK-TYPC.dwg By: Konenji

NOTE:
1. FOR INSETS, SEE SHEET 31.
2. FOR DUCTBANK CONFIGURATION, SEE SYSTEMS PLANS.

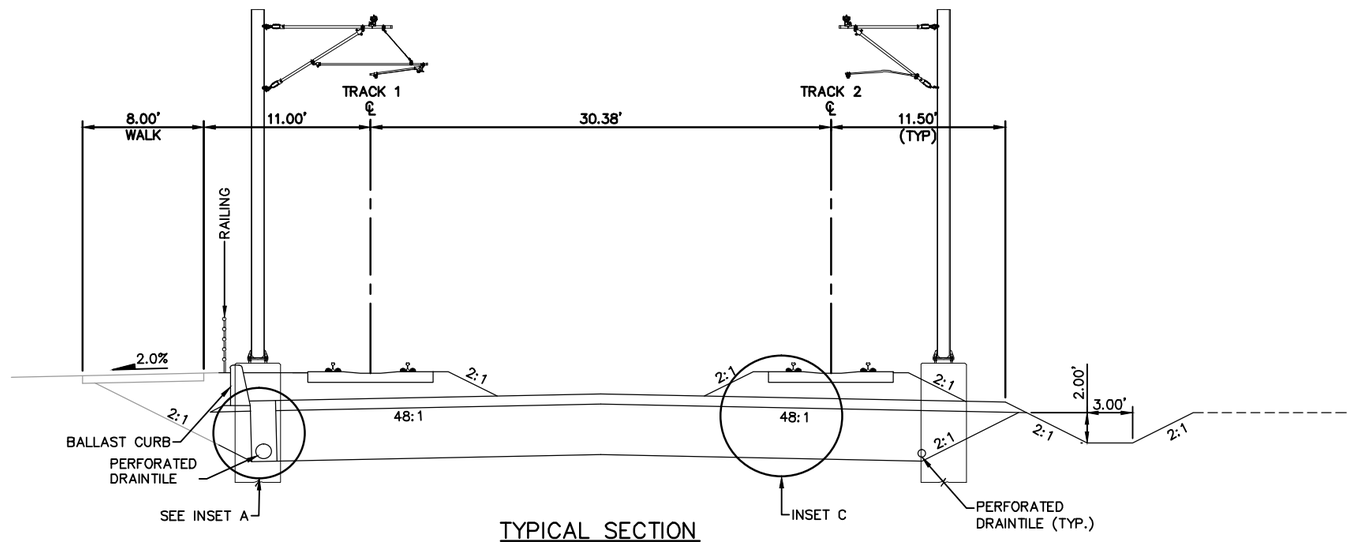

TYPICAL SECTION
STA. 2238+00 TO STA. 2242+47
STA. 2329+02 TO STA. 2331+00

0 2.5 5 10
HORIZONTAL
SCALE IN FEET

NO.	DATE	BY	CHECK	DESIGN	REVISION / SUBMITTAL
.	.	.	.	.	.
.	.	.	.	.	.
.	.	.	.	.	.
.	.	.	.	.	.
.	.	.	.	.	.
.	.	.	.	.	.
.	.	.	.	.	.
.	.	.	.	.	.
.	.	.	.	.	.

AECOM

PRELIMINARY ENGINEERING

METROPOLITAN COUNCIL

SOUTHWEST Green Line LRT Extension

WEST - VOLUME 1 (CIVIL) - SEGMENT 2
TRACK
TYPICAL SECTIONS

DISCIPLINE: TRACK

SHEET NAME: W2-TRK-TYP-006

SHEET 23 OF 107

Jun. 27 2014 09:36 am V:\3200_PEC-W\CAD\SEGMENT-W2\SHEET\TRACK\W2-TRK-TYPC.dwg By: Konenj

NOTE:
1. DIRECT FIXATION TRACK THROUGH STATION.
2. FOR INSETS, SEE SHEET 31.
3. STATION TO BE SUPPORTED ON PILES.
4. FOR DUCTBANK CONFIGURATION, SEE SYSTEMS PLANS.

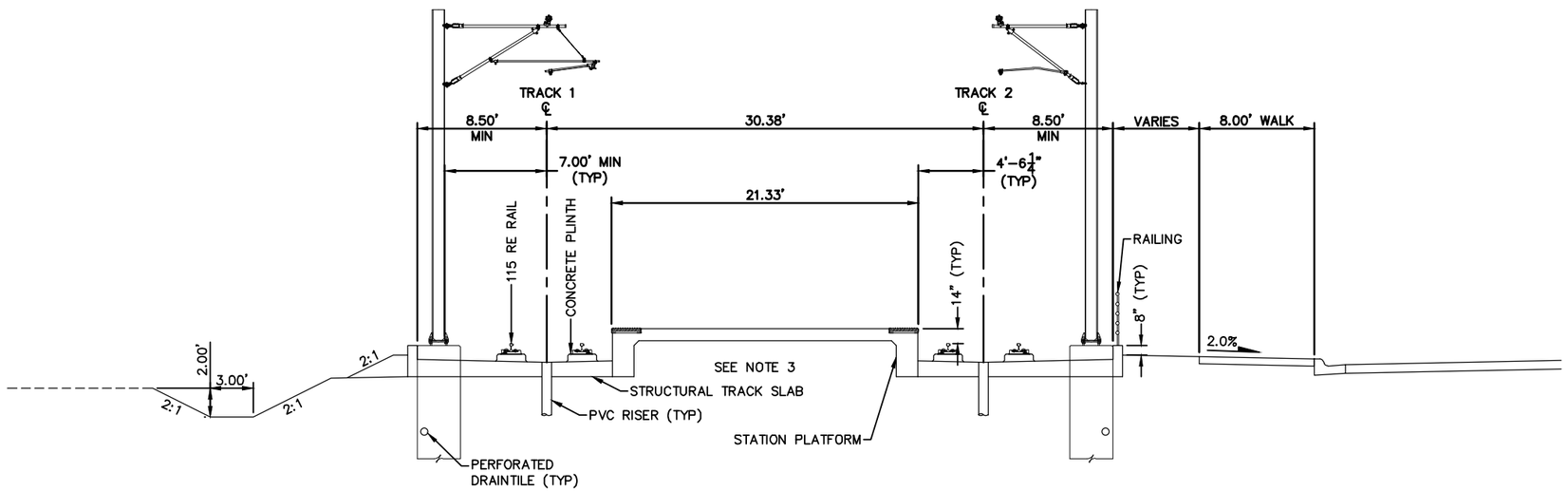

TYPICAL SECTION – GOLDEN TRIANGLE STATION
STA. 2242+47 TO STA. 2245+17

0 2.5 5 10
HORIZONTAL SCALE IN FEET

NO.	DATE	BY	CHECK	DESIGN	REVISION / SUBMITTAL
.	.	.	.	.	.
.	.	.	.	.	.
.	.	.	.	.	.
.	.	.	.	.	.
.	.	.	.	.	.
.	.	.	.	.	.
.	.	.	.	.	.
.	.	.	.	.	.
.	.	.	.	.	.

AECOM

PRELIMINARY ENGINEERING

METROPOLITAN COUNCIL

SOUTHWEST Green Line LRT Extension

WEST - VOLUME 1 (CIVIL) - SEGMENT 2
TRACK
TYPICAL SECTIONS

DISCIPLINE: TRACK

SHEET NAME: W2-TRK-TYP-007

SHEET 24 OF 107

Jun, 27 2014 09:36 am V:\3200_PEC-W\CAD\SEGMENT-W2\SHEET\TRACK\W2-TRK-TYPC.dwg By: Konenj

NOTE:
1. DIRECT FIXATION TRACK SHOWN. BALLASTED TRACK UNDER CONSIDERATION.
2. TRACK CENTERS NARROW FROM 30.38' TO 14.00' BETWEEN STA. 2245+70 AND STA. 2248+38.
3. DOES NOT DEPICT WALK BETWEEN STA. 2245+17 AND STA. 2245+50.
4. DOES NOT DEPICT RETAINING WALL ADJACENT TO LAND BRIDGE FROM STA. 2249+02 TO STA. 2250+80.
5. FOR DUCTBANK CONFIGURATION, SEE SYSTEMS PLANS.

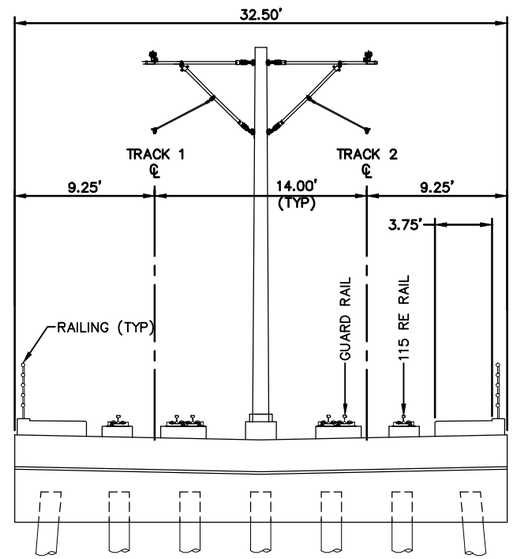

TYPICAL SECTION
STA. 2245+17 TO 2253+91 SEE NOTE 4

0 2.5 5 10
HORIZONTAL
SCALE IN FEET

NO.	DATE	BY	CHECK	DESIGN	REVISION / SUBMITTAL
.	.	.	.	.	.
.	.	.	.	.	.
.	.	.	.	.	.
.	.	.	.	.	.
.	.	.	.	.	.
.	.	.	.	.	.
.	.	.	.	.	.
.	.	.	.	.	.
.	.	.	.	.	.

AECOM

PRELIMINARY ENGINEERING

METROPOLITAN COUNCIL

SOUTHWEST Green Line LRT Extension

WEST - VOLUME 1 (CIVIL) - SEGMENT 2
TRACK
TYPICAL SECTIONS

DISCIPLINE: TRACK

SHEET NAME: W2-TRK-TYP-008

SHEET 25 OF 107

Jun, 27 2014 09:36 am V:\3200_PEC-W\CAD\SEGMENT-W2\SHEET\TRACK\W2-TRK-TYPC.dwg By: Konenjl

NOTE:
1. TRACK CENTERS WIDEN FROM 30.20' TO 30.38' BETWEEN STA. 2292+00 AND STA. 2292+38.
2. TRACK CENTERS: 30.38' BETWEEN STA. 2292+38 AND STA. 2296+25.
3. TRACK CENTERS: 30.38' BETWEEN STA. 2298+95 AND STA. 2299+57.
4. TRACK CENTERS NARROW FROM 30.38' TO 30.28' BETWEEN STA. 2299+57 AND STA. 2299+90.
5. FOR INSETS, SEE SHEET 31.
6. FOR DUCTBANK CONFIGURATION, SEE SYSTEMS PLANS.

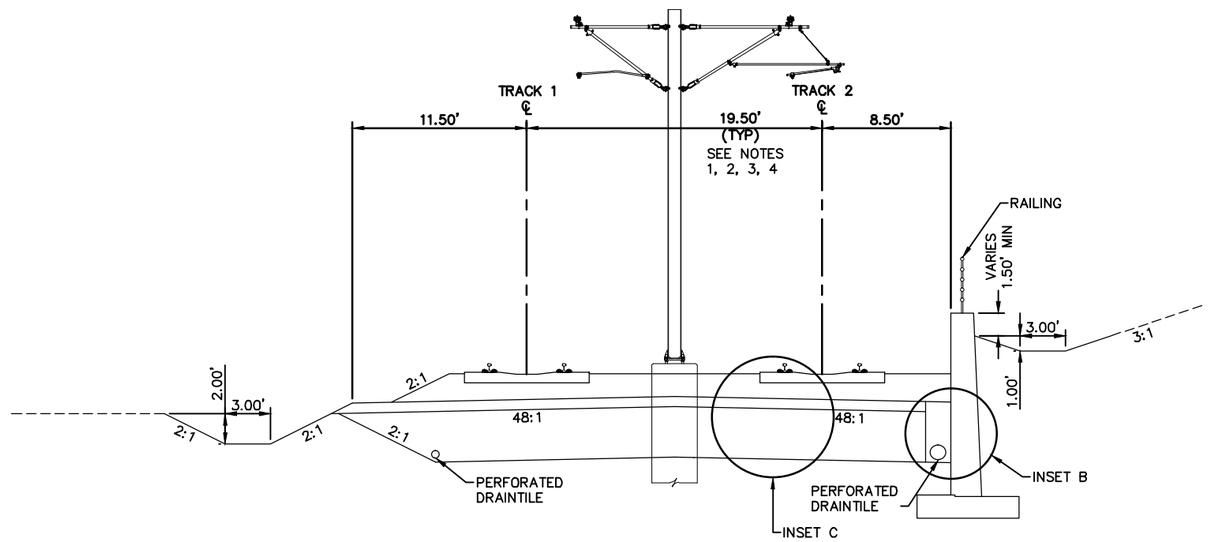

TYPICAL SECTION
STA. 2292+00 TO STA. 2296+25
STA. 2298+95 TO STA. 2299+90
STA. 2312+84 TO STA. 2313+00
STA. 2315+21 TO STA. 2316+00

0 2.5 5 10
SCALE HORIZONTAL IN FEET

NO.	DATE	BY	CHECK	DESIGN	REVISION / SUBMITTAL
.	.	.	.	.	.
.	.	.	.	.	.
.	.	.	.	.	.
.	.	.	.	.	.
.	.	.	.	.	.
.	.	.	.	.	.
.	.	.	.	.	.
.	.	.	.	.	.
.	.	.	.	.	.

AECOM

PRELIMINARY ENGINEERING

METROPOLITAN COUNCIL

SOUTHWEST Green Line LRT Extension

WEST - VOLUME 1 (CIVIL) - SEGMENT 2
TRACK
TYPICAL SECTIONS

DISCIPLINE: TRACK

SHEET NAME: W2-TRK-TYP-009

SHEET 26 OF 107

Jun, 27 2014 09:36 am V:\3200_PEC-W\CAD\SEGMENT-W2\SHEET\TRACK\W2-TRK-TYPC.dwg By: Konenji

NOTE:
1. DIRECT FIXATION TRACK THROUGH STATION.
2. FOR INSETS, SEE SHEET 31.
3. FOR DUCTBANK CONFIGURATION, SEE SYSTEMS PLANS.

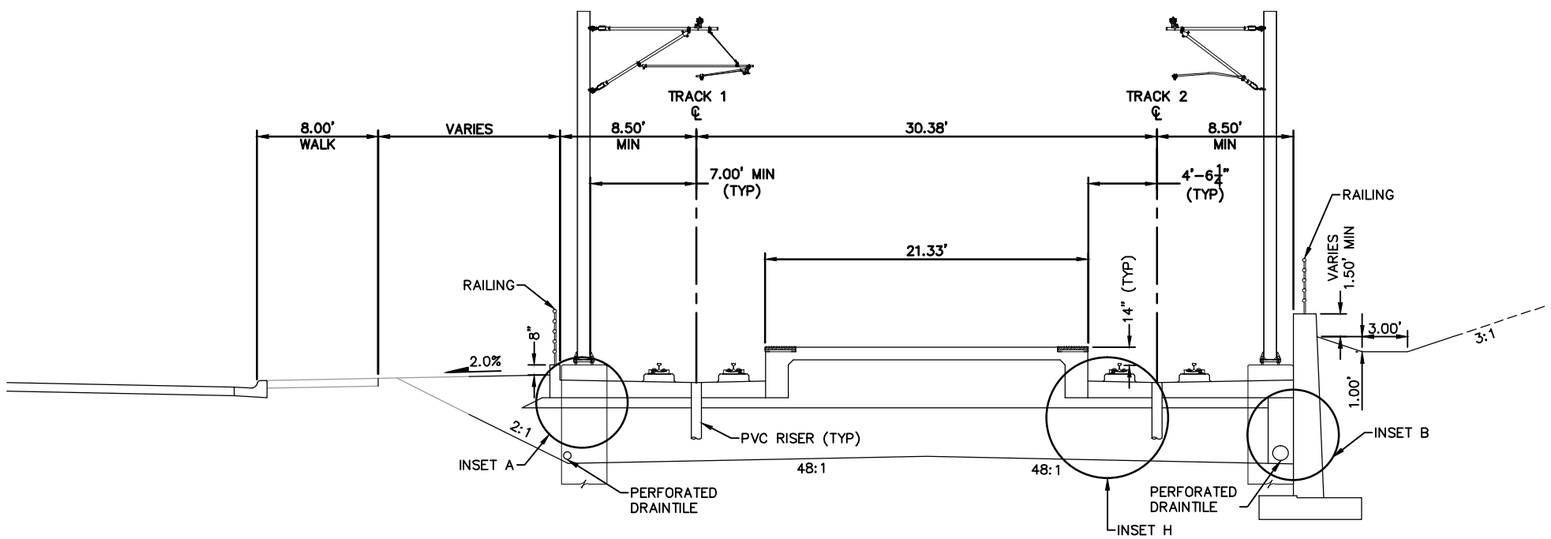

TYPICAL SECTION – CITY WEST STATION
STA. 2296+25 TO STA. 2298+95

0 2.5 5 10
HORIZONTAL
SCALE IN FEET

NO.	DATE	BY	CHECK	DESIGN	REVISION / SUBMITTAL
.	.	.	.	.	.
.	.	.	.	.	.
.	.	.	.	.	.
.	.	.	.	.	.
.	.	.	.	.	.
.	.	.	.	.	.
.	.	.	.	.	.
.	.	.	.	.	.
.	.	.	.	.	.

AECOM

PRELIMINARY ENGINEERING

METROPOLITAN COUNCIL

SOUTHWEST Green Line LRT Extension

WEST - VOLUME 1 (CIVIL) - SEGMENT 2
TRACK
TYPICAL SECTIONS

DISCIPLINE: TRACK

SHEET NAME: W2-TRK-TYP-010

SHEET 27 OF 107

Jun, 27 2014 09:36 am V:\3200_PEC-W\CAD\SEGMENT-W2\SHEET\TRACK\W2-TRK-TYPC.dwg By: Konenj

NOTE:
1. DIRECT FIXATION TRACK THROUGH TUNNEL.
2. FOR DUCTBANK CONFIGURATION, SEE SYSTEMS PLANS.

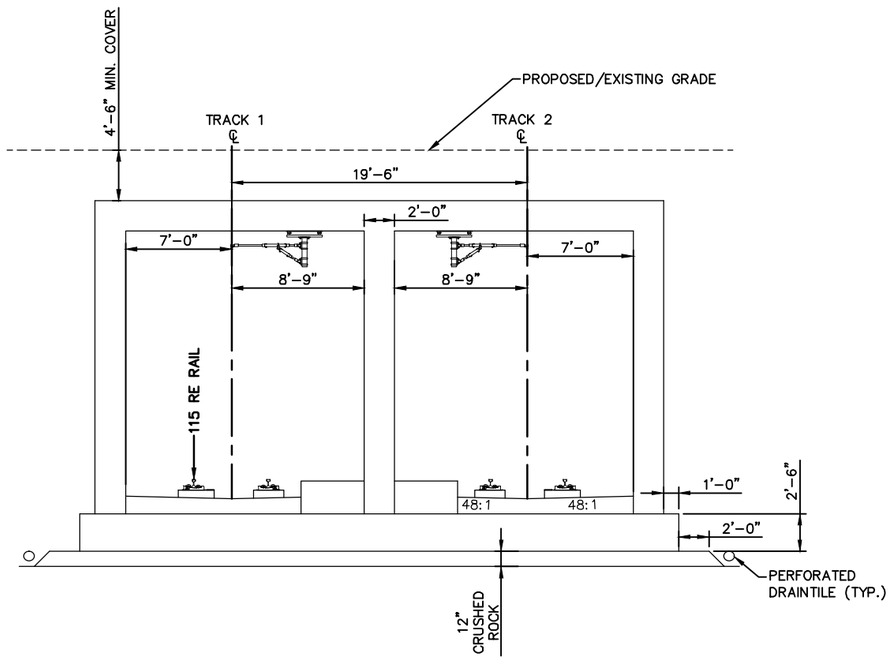

TYPICAL SECTION
STA. 2304+71 TO STA. 2311+69

0 2.5 5 10
HORIZONTAL
SCALE IN FEET

NO.	DATE	BY	CHECK	DESIGN	REVISION / SUBMITTAL
.	.	.	.	.	.
.	.	.	.	.	.
.	.	.	.	.	.
.	.	.	.	.	.
.	.	.	.	.	.
.	.	.	.	.	.
.	.	.	.	.	.
.	.	.	.	.	.
.	.	.	.	.	.

AECOM

PRELIMINARY ENGINEERING

METROPOLITAN COUNCIL

SOUTHWEST Green Line LRT Extension

WEST - VOLUME 1 (CIVIL) - SEGMENT 2
TRACK
TYPICAL SECTIONS

DISCIPLINE: TRACK

SHEET NAME: W2-TRK-TYP-011

SHEET 28 OF 107

Jun, 27 2014 09:36 am V:\3200_PEC-W\CAD\SEGMENT-W2\SHEET\TRACK\W2-TRK-TYPC.dwg By: Konenjl

NOTE:
1. TRACK CENTERS: 19.50' BETWEEN STA. 2313+00 AND STA. 2315+21.
2. TRACK CENTERS NARROW FROM 19.16' TO 14.00' BETWEEN STA. 2316+00 AND STA. 2320+02.
3. TRACK CENTERS WIDEN FROM 14.00' TO 30.38' BETWEEN STA. 2322+68 AND STA. 2325+42.
4. TRACK CENTERS: 30.38' BETWEEN STA. 2331+00 AND STA. 2332+40.
5. LIMITS OF SECTION INCLUDE AT-GRADE CROSSINGS THAT ARE NOT DEPICTED.
6. FOR INSETS, SEE SHEET 31.
7. TRAIL NOT DEPICTED, REFER TO CIVIL DRAWINGS.
8. LIMITS OF SECTION INCLUDE A GRADE SEPARATED CULVERT THAT IS NOT DEPICTED.
9. NO. 8 DOUBLE CROSSOVER FROM STA. 2329+07 TO STA. 2331+91 NOT DEPICTED.
10. FOR DUCTBANK CONFIGURATION, SEE SYSTEMS PLANS.

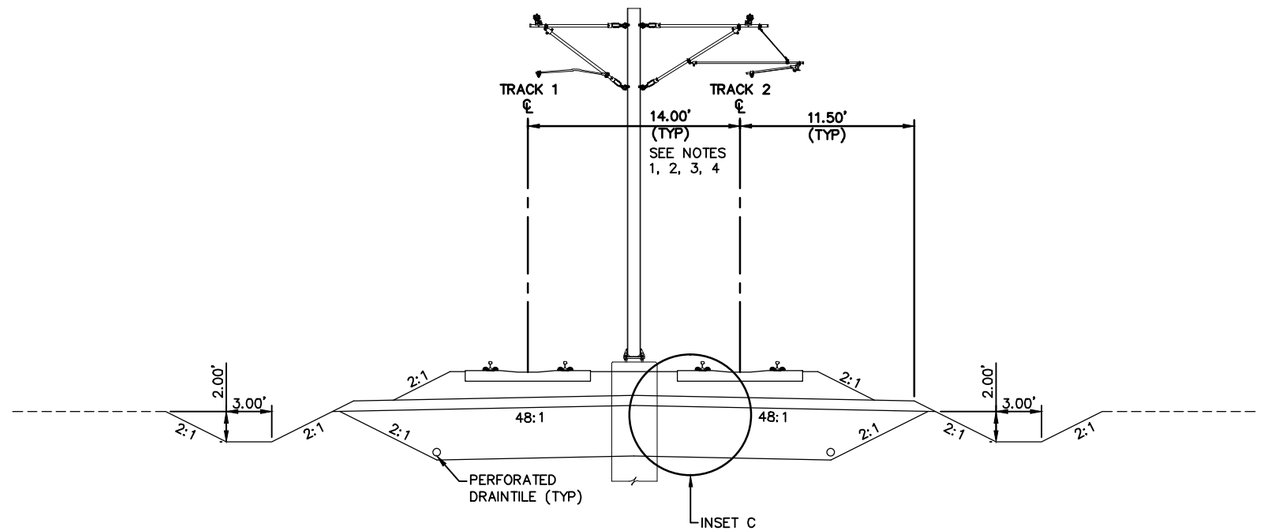

TYPICAL SECTION

STA. 2313+00 TO STA. 2315+21 SEE NOTE 8
STA. 2316+00 TO STA. 2325+92 SEE NOTE 7
STA. 2331+00 TO STA. 2333+40 SEE NOTE 7 AND 9

0 2.5 5 10
HORIZONTAL
SCALE IN FEET

NO.	DATE	BY	CHECK	DESIGN	REVISION / SUBMITTAL
.	.	.	.	.	.
.	.	.	.	.	.
.	.	.	.	.	.
.	.	.	.	.	.
.	.	.	.	.	.
.	.	.	.	.	.
.	.	.	.	.	.
.	.	.	.	.	.
.	.	.	.	.	.

AECOM

PRELIMINARY ENGINEERING

METROPOLITAN COUNCIL

SOUTHWEST Green Line LRT Extension

WEST - VOLUME 1 (CIVIL) - SEGMENT 2
TRACK
TYPICAL SECTIONS

DISCIPLINE: TRACK

SHEET NAME: W2-TRK-TYP-012

SHEET 29 OF 107

Jun, 27 2014 09:36 am V:\3200_PEC-W\CAD\SEGMENT-W2\SHEET\TRACK\W2-TRK-TYPC.dwg By: Komenji

NOTE:
1. DIRECT FIXATION TRACK THROUGH STATION.
2. FOR INSETS, SEE SHEET 31.
3. FOR DUCTBANK CONFIGURATION, SEE SYSTEMS PLANS.

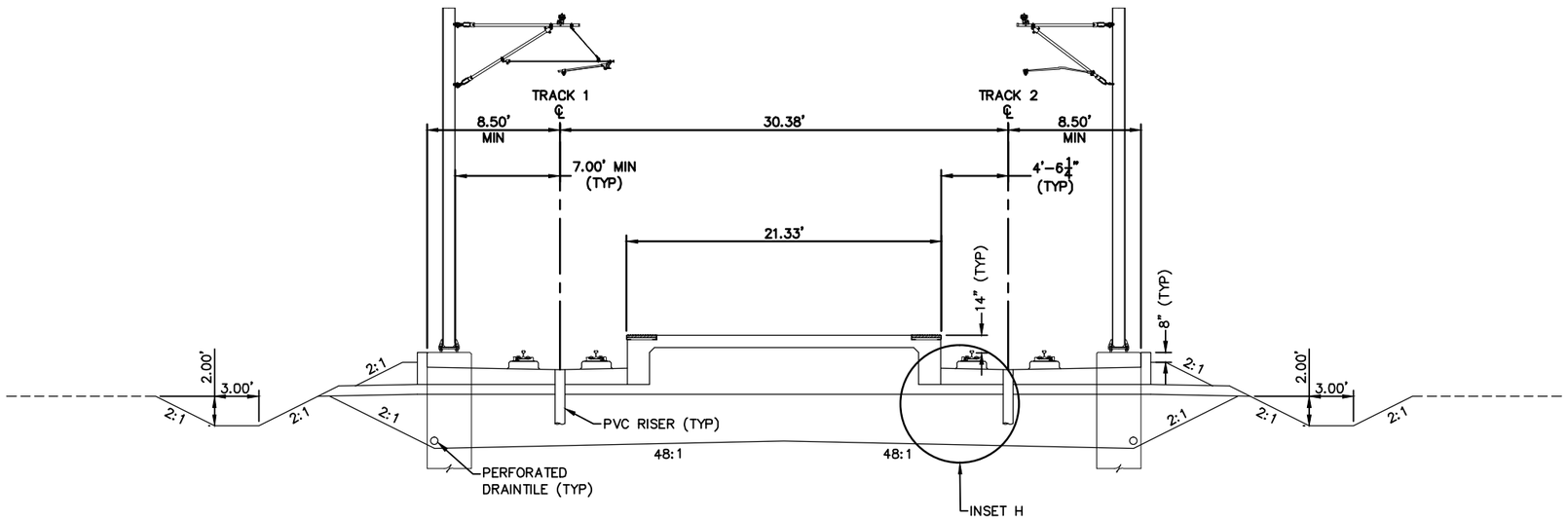

TYPICAL SECTION – OPUS STATION
STA. 2325+92 TO STA. 2328+62

0 2.5 5 10
HORIZONTAL
SCALE IN FEET

NO.	DATE	BY	CHECK	DESIGN	REVISION / SUBMITTAL
.	.	.	.	.	.
.	.	.	.	.	.
.	.	.	.	.	.
.	.	.	.	.	.
.	.	.	.	.	.
.	.	.	.	.	.
.	.	.	.	.	.
.	.	.	.	.	.
.	.	.	.	.	.

AECOM

PRELIMINARY ENGINEERING

METROPOLITAN COUNCIL

SOUTHWEST Green Line LRT Extension

WEST - VOLUME 1 (CIVIL) - SEGMENT 2
TRACK
TYPICAL SECTIONS

DISCIPLINE: TRACK

SHEET NAME: W2-TRK-TYP-013

SHEET 30 OF 107

Jun, 27 2014 09:36 am V:\3200_PEC-W\CAD\SEGMENT-W2\SHEET\TRACK\W2-TRK-TYPC.dwg By: Konenj

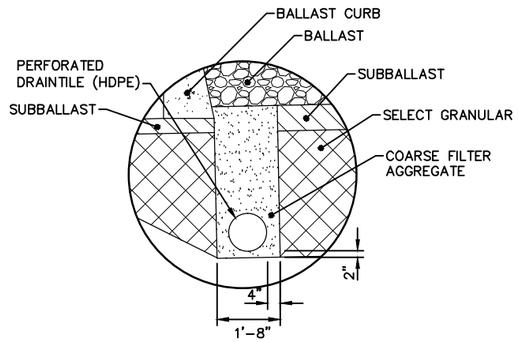

INSET A – BALLAST CURB INTERFACE

NOTE: LEFT SIDE DRAINAGE TRENCH ILLUSTRATED.
FOR RIGHT SIDE, MIRROR SECTION.

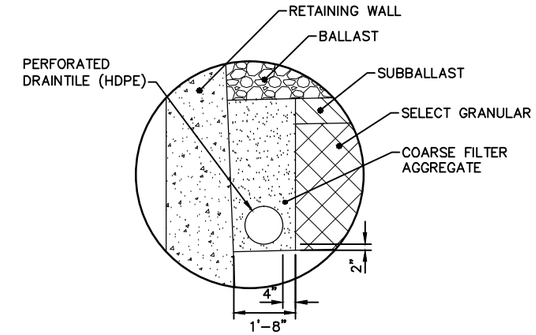

INSET B – RETAINING WALL INTERFACE

NOTE: LEFT SIDE DRAINAGE TRENCH ILLUSTRATED.
FOR RIGHT SIDE, MIRROR SECTION.

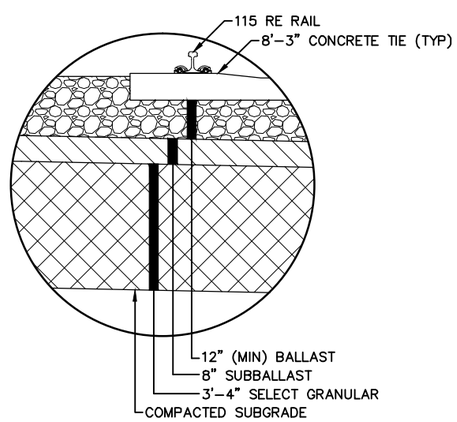

INSET C – TYPICAL BALLASTED TRACK

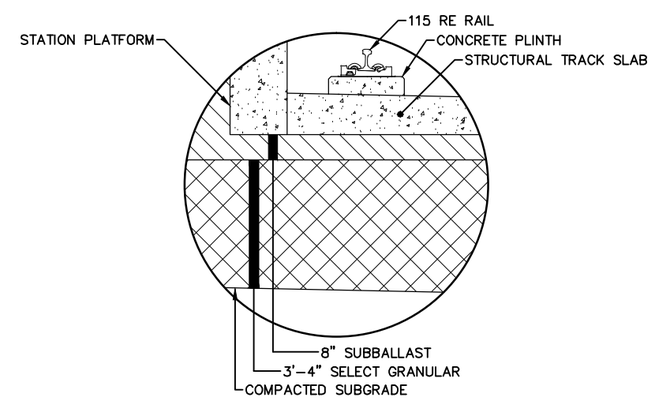

INSET H – TYPICAL DIRECT FIXATION INTERFACE
AT STATION PLATFORM

NO.	DATE	BY	CHECK	DESIGN	REVISION / SUBMITTAL
.	.	.	.	.	.
.	.	.	.	.	.
.	.	.	.	.	.
.	.	.	.	.	.
.	.	.	.	.	.
.	.	.	.	.	.
.	.	.	.	.	.
.	.	.	.	.	.
.	.	.	.	.	.

AECOM

PRELIMINARY ENGINEERING

METROPOLITAN COUNCIL

SOUTHWEST Green Line LRT Extension

WEST - VOLUME 1 (CIVIL) - SEGMENT 2
TRACK
TYPICAL SECTIONS

DISCIPLINE: TRACK

SHEET NAME: W2-TRK-TYP-INS

SHEET 31 OF 107

Jun, 27 2014 09:37 am V:\3200_PEC-W\CAD\SEGMENT-W2\SHEET\TRACK\W2-TRK-TYPC.dwg By: Konenji

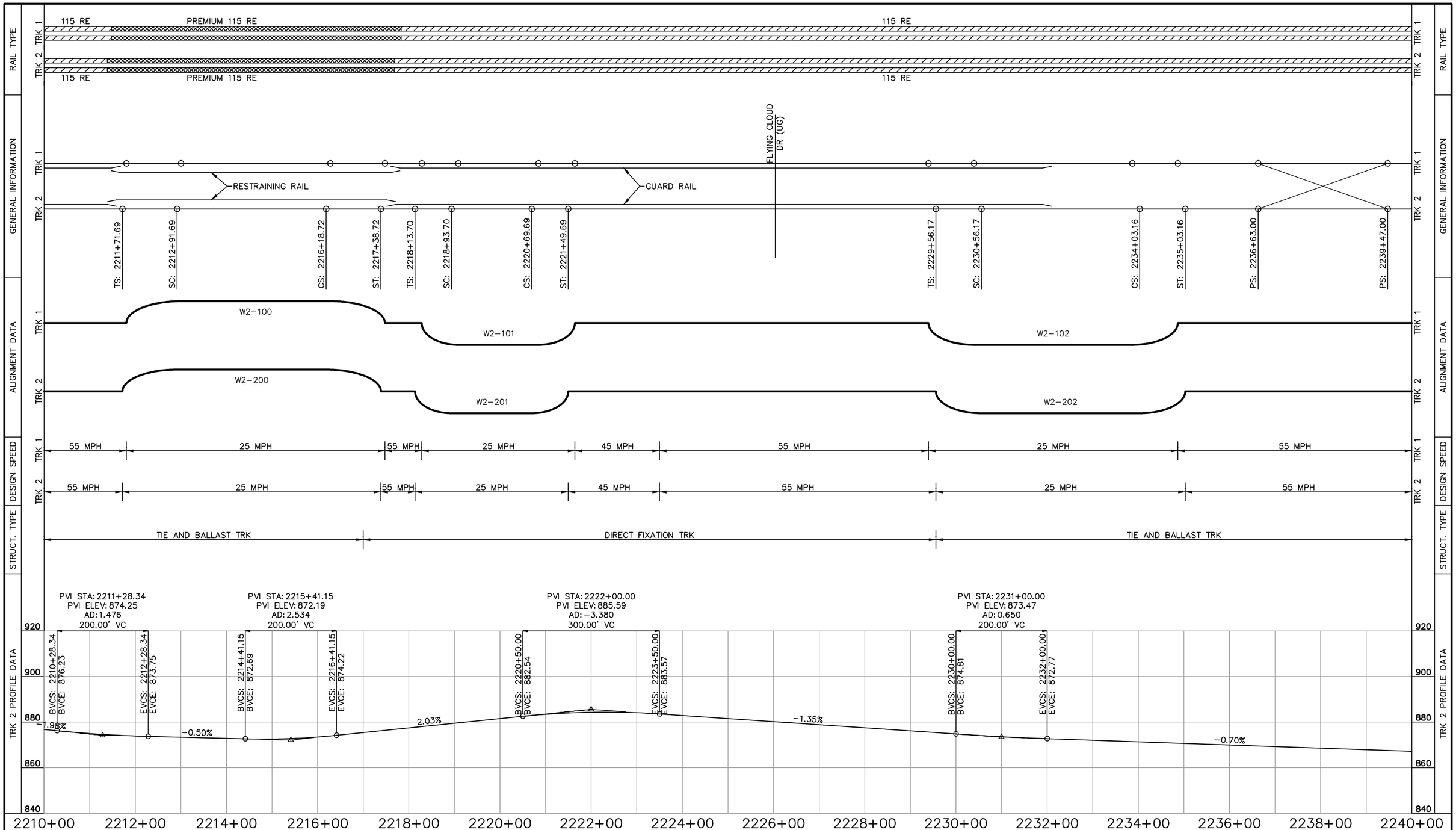

NO.	DATE	BY	CHECK	DESIGN	REVISION / SUBMITTAL
.	.	.	.	.	.
.	.	.	.	.	.
.	.	.	.	.	.
.	.	.	.	.	.
.	.	.	.	.	.
.	.	.	.	.	.
.	.	.	.	.	.
.	.	.	.	.	.
.	.	.	.	.	.

AECOM

PRELIMINARY ENGINEERING

METROPOLITAN COUNCIL

SOUTHWEST Green Line LRT Extension

WEST - VOLUME 1 (CIVIL) - SEGMENT 2
TRACK CHART
STA. 2210+00 TO STA. 2240+00

DISCIPLINE: TRACK

SHEET NAME: W2-TRK-CHRT-001

SHEET 32 OF 107

Aug, 27 2014 03:44 pm V:\3200_PEC-W\CAD\SEGMENT-W2\SHEET\TRACK\W2-TRK-CHRT-EX.dwg By: MaurisakB

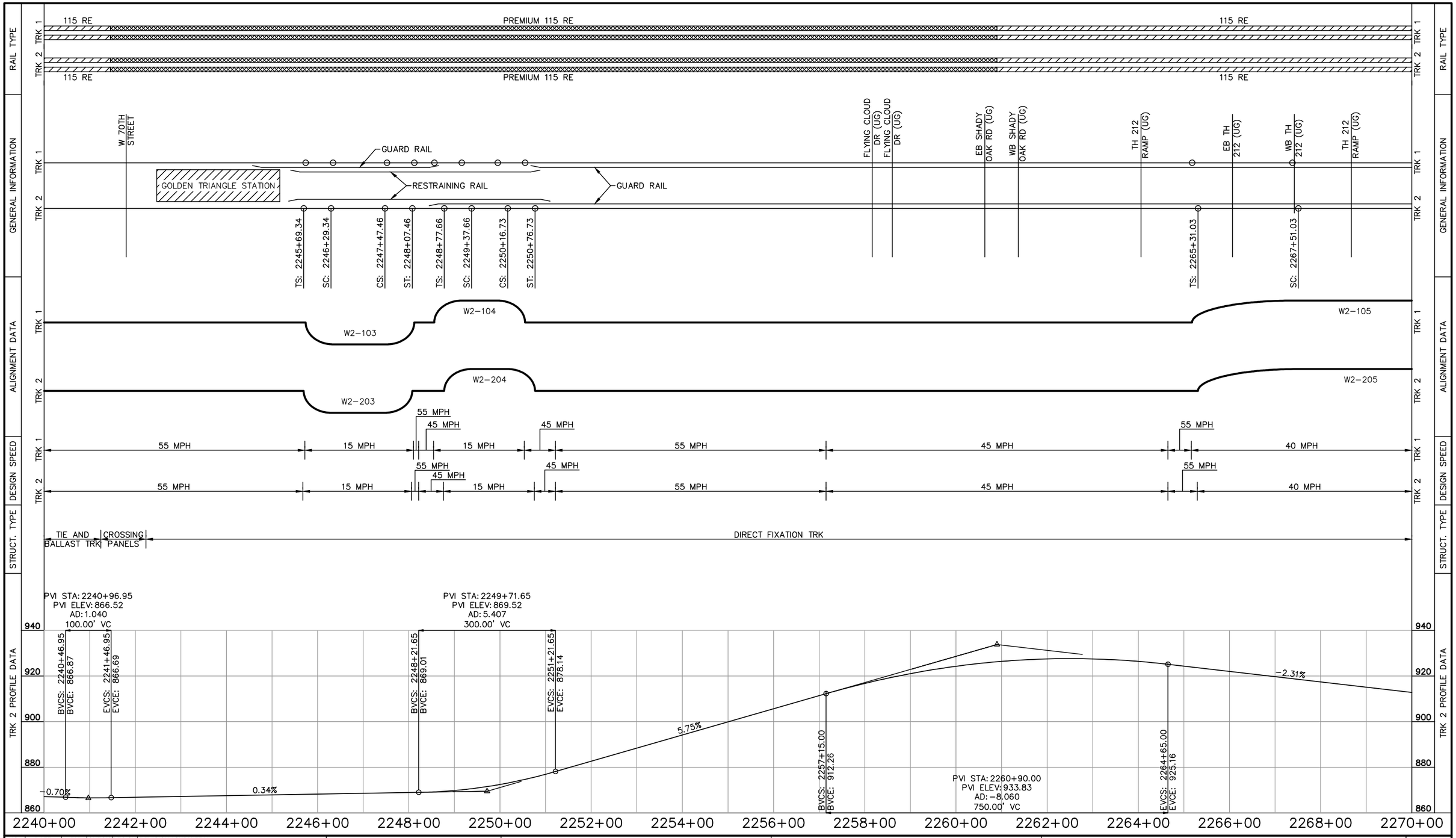

NO.	DATE	BY	CHECK	DESIGN	REVISION / SUBMITTAL
.	.	.	.	.	.
.	.	.	.	.	.
.	.	.	.	.	.
.	.	.	.	.	.
.	.	.	.	.	.
.	.	.	.	.	.
.	.	.	.	.	.
.	.	.	.	.	.
.	.	.	.	.	.

AECOM

PRELIMINARY ENGINEERING

METROPOLITAN COUNCIL

SOUTHWEST Green Line LRT Extension

WEST - VOLUME 1 (CIVIL) - SEGMENT 2
TRACK CHART
STA. 2240+00 TO STA. 2270+00

DISCIPLINE: TRACK

SHEET NAME: W2-TRK-CHRT-002

SHEET 33 OF 107

Aug, 27 2014 03:44 pm V:\3200_PEC-W\CAD\SEGMENT-W2\SHEET\TRACK\W2-TRK-CHRT-EX.dwg By: MaurisakB

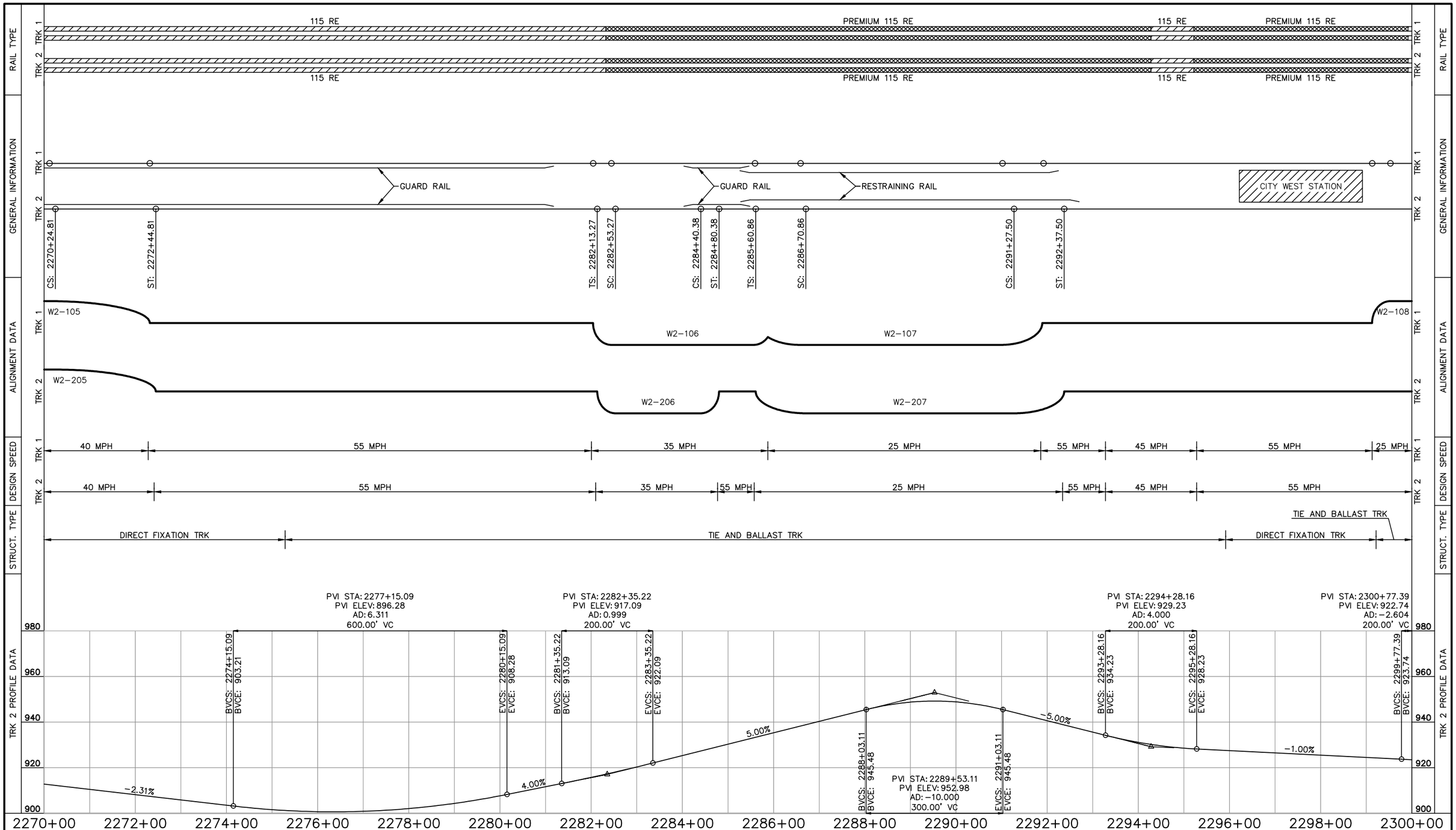

NO.	DATE	BY	CHECK	DESIGN	REVISION / SUBMITTAL
.	.	.	.	.	.
.	.	.	.	.	.
.	.	.	.	.	.
.	.	.	.	.	.
.	.	.	.	.	.
.	.	.	.	.	.
.	.	.	.	.	.
.	.	.	.	.	.
.	.	.	.	.	.
.	.	.	.	.	.

AECOM

PRELIMINARY ENGINEERING

METROPOLITAN COUNCIL

SOUTHWEST Green Line LRT Extension

WEST - VOLUME 1 (CIVIL) - SEGMENT 2
TRACK CHART
STA. 2270+00 TO STA. 2300+00

DISCIPLINE: TRACK

SHEET NAME: W2-TRK-CHRT-003

SHEET 34 OF 107

Aug, 27 2014 03:44 pm V:\3200_PEC-W\CAD\SEGMENT-W2\SHEET\TRACK\W2-TRK-CHRT-EX.dwg By: MaurisakB

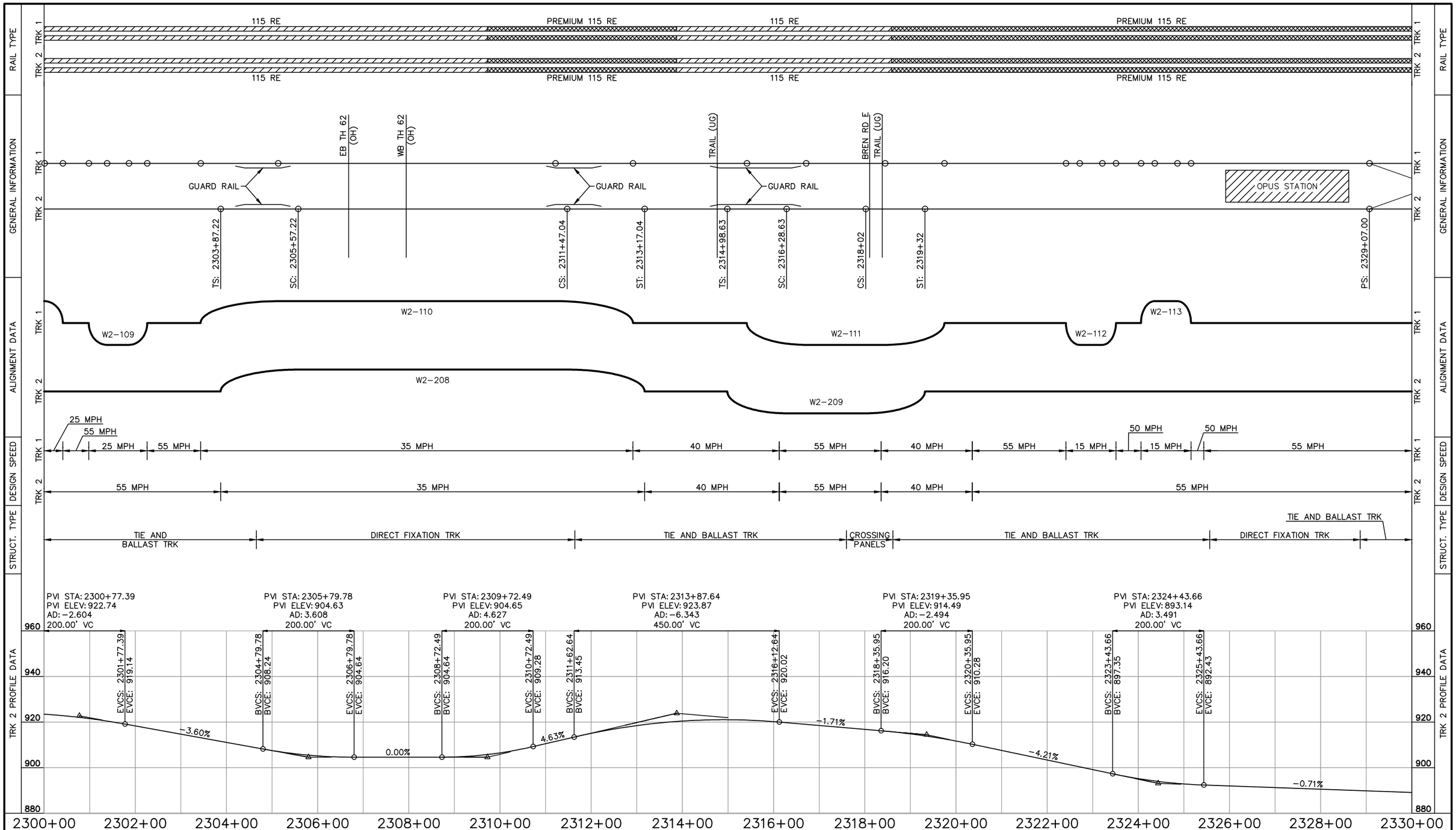

NO.	DATE	BY	CHECK	DESIGN	REVISION / SUBMITTAL
.	.	.	.	.	.
.	.	.	.	.	.
.	.	.	.	.	.
.	.	.	.	.	.
.	.	.	.	.	.
.	.	.	.	.	.
.	.	.	.	.	.
.	.	.	.	.	.
.	.	.	.	.	.
.	.	.	.	.	.

AECOM

PRELIMINARY ENGINEERING

METROPOLITAN COUNCIL

SOUTHWEST Green Line LRT Extension

WEST - VOLUME 1 (CIVIL) - SEGMENT 2
TRACK CHART
STA. 2300+00 TO STA. 2330+00

DISCIPLINE: TRACK

SHEET NAME: W2-TRK-CHRT-004

SHEET 35 OF 107

Aug, 27 2014 03:44 pm V:\3200_PEC-W\CAD\SEGMENT-W2\SHEET\TRACK\W2-TRK-CHRT-EX.dwg By: MaurisakB

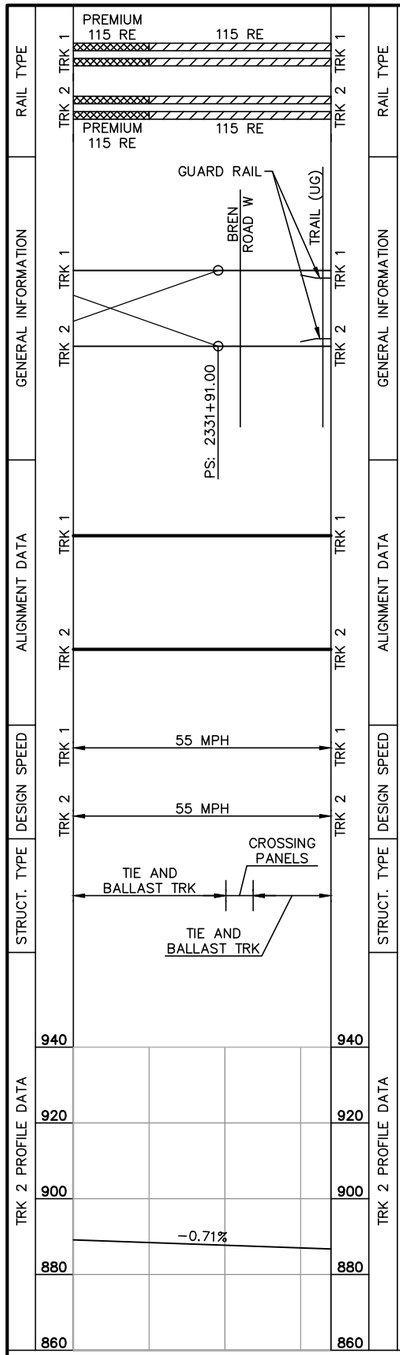

NO.	DATE	BY	CHECK	DESIGN	REVISION / SUBMITTAL
.	.	.	.	.	.
.	.	.	.	.	.
.	.	.	.	.	.
.	.	.	.	.	.
.	.	.	.	.	.
.	.	.	.	.	.
.	.	.	.	.	.
.	.	.	.	.	.
.	.	.	.	.	.

AECOM

PRELIMINARY ENGINEERING

METROPOLITAN COUNCIL

SOUTHWEST Green Line LRT Extension

WEST - VOLUME 1 (CIVIL) - SEGMENT 2
TRACK CHART
STA. 2330+00 TO STA. 2333+40

DISCIPLINE: TRACK

SHEET NAME: W2-TRK-CHRT-005

SHEET 36 OF 107

Aug, 27 2014 03:44 pm V:\3200_PEC-W\CAD\SEGMENT-W2\SHEET\TRACK\W2-TRK-CHRT-EX.dwg By: MaurisakB

CURVE NO. W2–200
R = 400.00'
Lc = 327.04'
Ls = 120.00'
Ea = 3.50"
Eu = 2.69"
V = 25 MPH

CURVE NO. W2–100
R = 400.00'
Lc = 327.04'
Ls = 120.00'
Ea = 3.50"
Eu = 2.69"
V = 25 MPH

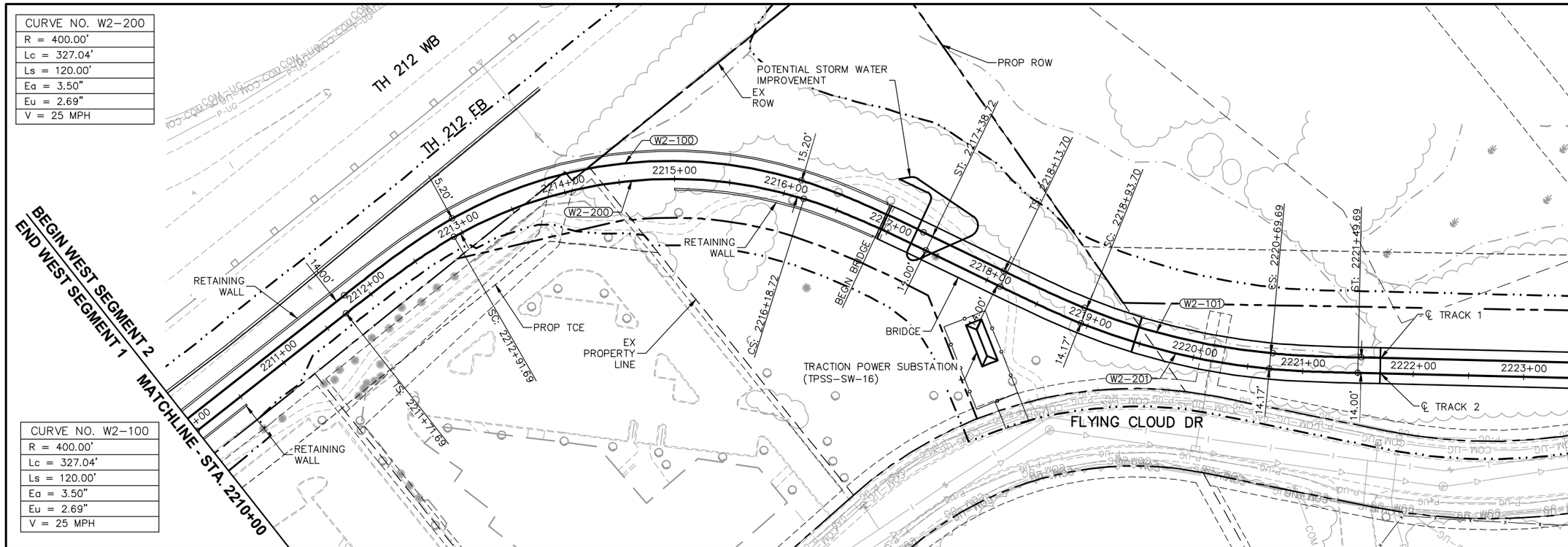

CURVE NO. W2–201
R = 600.00'
Lc = 175.99'
Ls = 80.00'
Ea = 2.25"
Eu = 1.88"
V = 25 MPH

CURVE NO. W2–101
R = 600.00'
Lc = 175.99'
Ls = 80.00'
Ea = 2.25"
Eu = 1.88"
V = 25 MPH

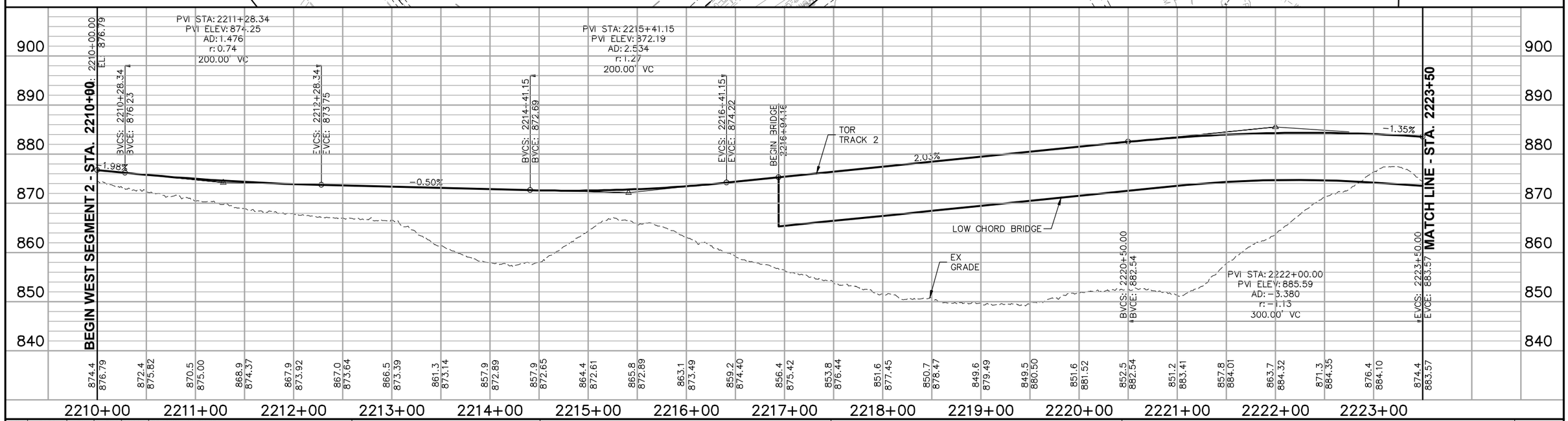

NO.	DATE	BY	CHECK	DESIGN	REVISION / SUBMITTAL
.	.	.	.	.	.
.	.	.	.	.	.
.	.	.	.	.	.
.	.	.	.	.	.
.	.	.	.	.	.
.	.	.	.	.	.
.	.	.	.	.	.
.	.	.	.	.	.
.	.	.	.	.	.
.	.	.	.	.	.

AECOM

PRELIMINARY ENGINEERING

METROPOLITAN COUNCIL

SOUTHWEST Green Line LRT Extension

WEST - VOLUME 1 (CIVIL) - SEGMENT 2
TRACK
PLAN AND PROFILE
STA. 2210+00 TO STA. 2223+50

DISCIPLINE: TRACK

SHEET NAME: W2-TRK-PPFL-001

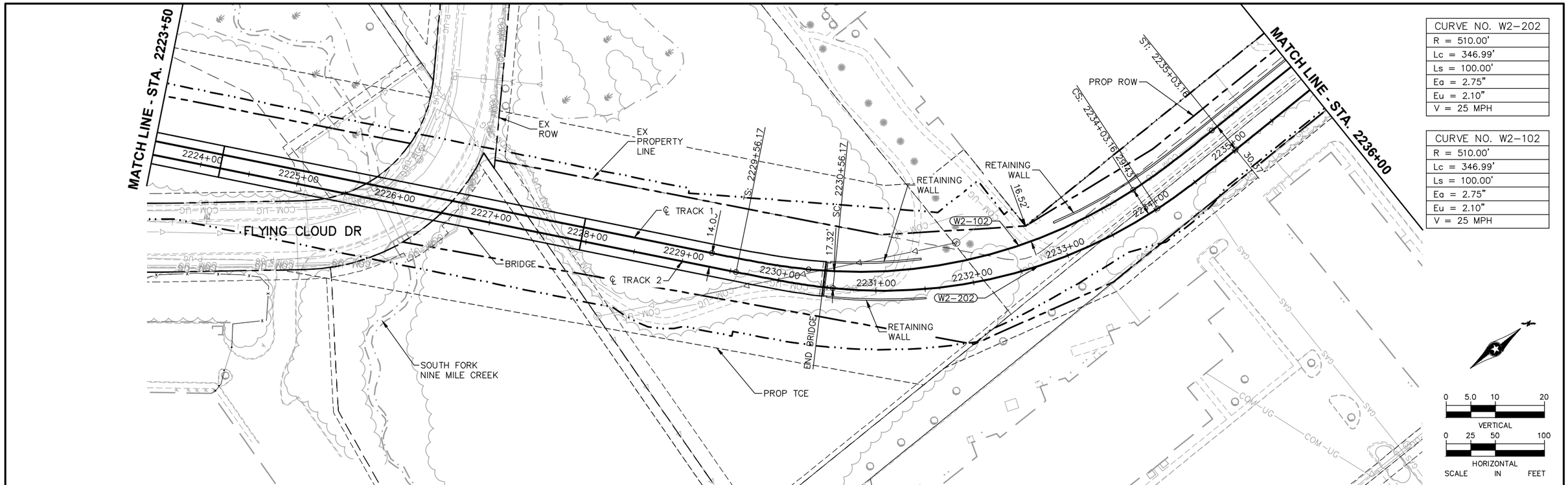

CURVE NO. W2-202
R = 510.00'
Lc = 346.99'
Ls = 100.00'
Eq = 2.75"
Eu = 2.10"
V = 25 MPH

CURVE NO. W2-102
R = 510.00'
Lc = 346.99'
Ls = 100.00'
Eq = 2.75"
Eu = 2.10"
V = 25 MPH

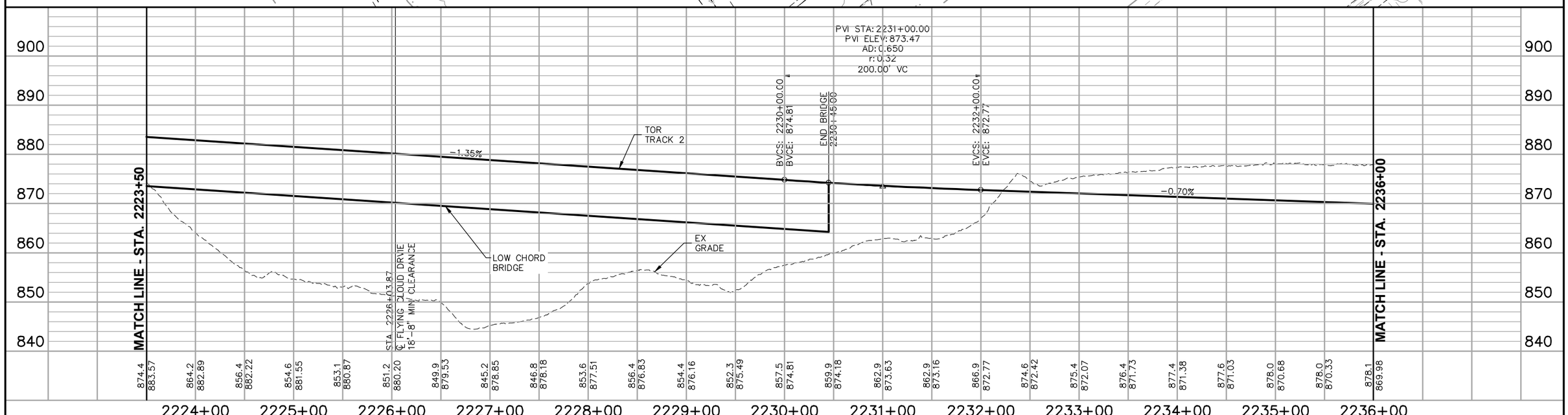

NO.	DATE	BY	CHECK	DESIGN	REVISION / SUBMITTAL
.	.	.	.	.	.
.	.	.	.	.	.
.	.	.	.	.	.
.	.	.	.	.	.
.	.	.	.	.	.
.	.	.	.	.	.
.	.	.	.	.	.
.	.	.	.	.	.
.	.	.	.	.	.
.	.	.	.	.	.

AECOM

PRELIMINARY ENGINEERING

METROPOLITAN COUNCIL

SOUTHWEST Green Line LRT Extension

WEST - VOLUME 1 (CIVIL) - SEGMENT 2
TRACK
PLAN AND PROFILE
STA. 2223+50 TO STA. 2236+00

DISCIPLINE: TRACK

SHEET NAME: W2-TRK-PPFL-002

SHEET 38 OF 107

Jul, 01 2014 01:09 pm V:\3200_PEC-W\CAD\SEGMENT-W2\SHEET\TRACK\W2-TRK-PLN.dwg By: yangdk

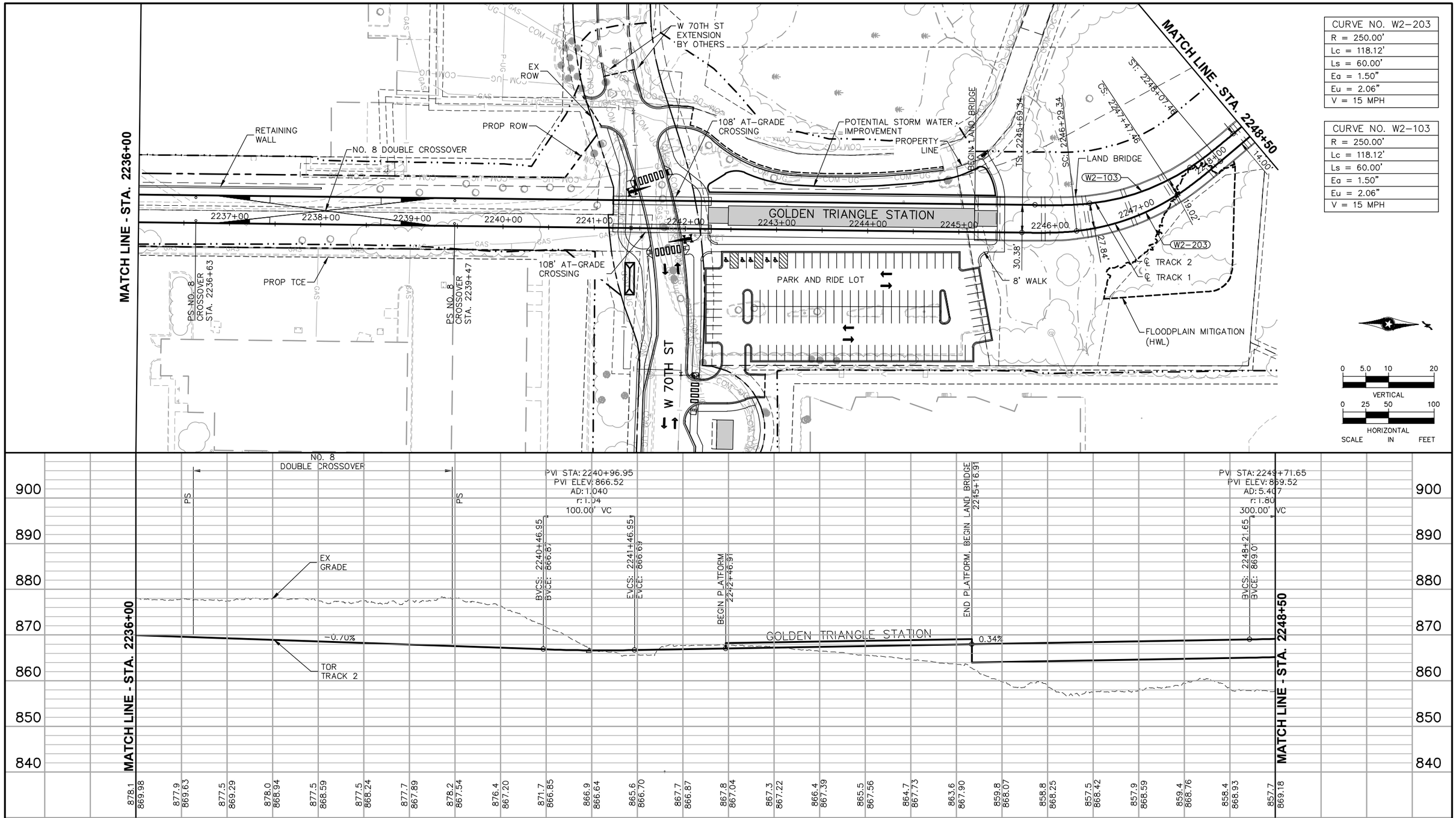

CURVE NO. W2-203
R = 250.00'
Lc = 118.12'
Ls = 60.00'
Eq = 1.50"
Eu = 2.06"
V = 15 MPH

CURVE NO. W2-103
R = 250.00'
Lc = 118.12'
Ls = 60.00'
Eq = 1.50"
Eu = 2.06"
V = 15 MPH

NO.	DATE	BY	CHECK	DESIGN	REVISION / SUBMITTAL
.	.	.	.	.	.
.	.	.	.	.	.
.	.	.	.	.	.
.	.	.	.	.	.
.	.	.	.	.	.
.	.	.	.	.	.
.	.	.	.	.	.
.	.	.	.	.	.
.	.	.	.	.	.

AECOM

PRELIMINARY ENGINEERING

METROPOLITAN COUNCIL

SOUTHWEST Green Line LRT Extension

WEST - VOLUME 1 (CIVIL) - SEGMENT 2
TRACK
PLAN AND PROFILE
STA. 2236+00 TO STA. 2248+50

DISCIPLINE: TRACK

SHEET NAME: W2-TRK-PPFL-003

SHEET 39 OF 107

Jul, 01 2014 01:10 pm V:\3200_PEC-W\CAD\SEGMENT-W2\SHEET\TRACK\W2-TRK-PLN.dwg By: yangdk

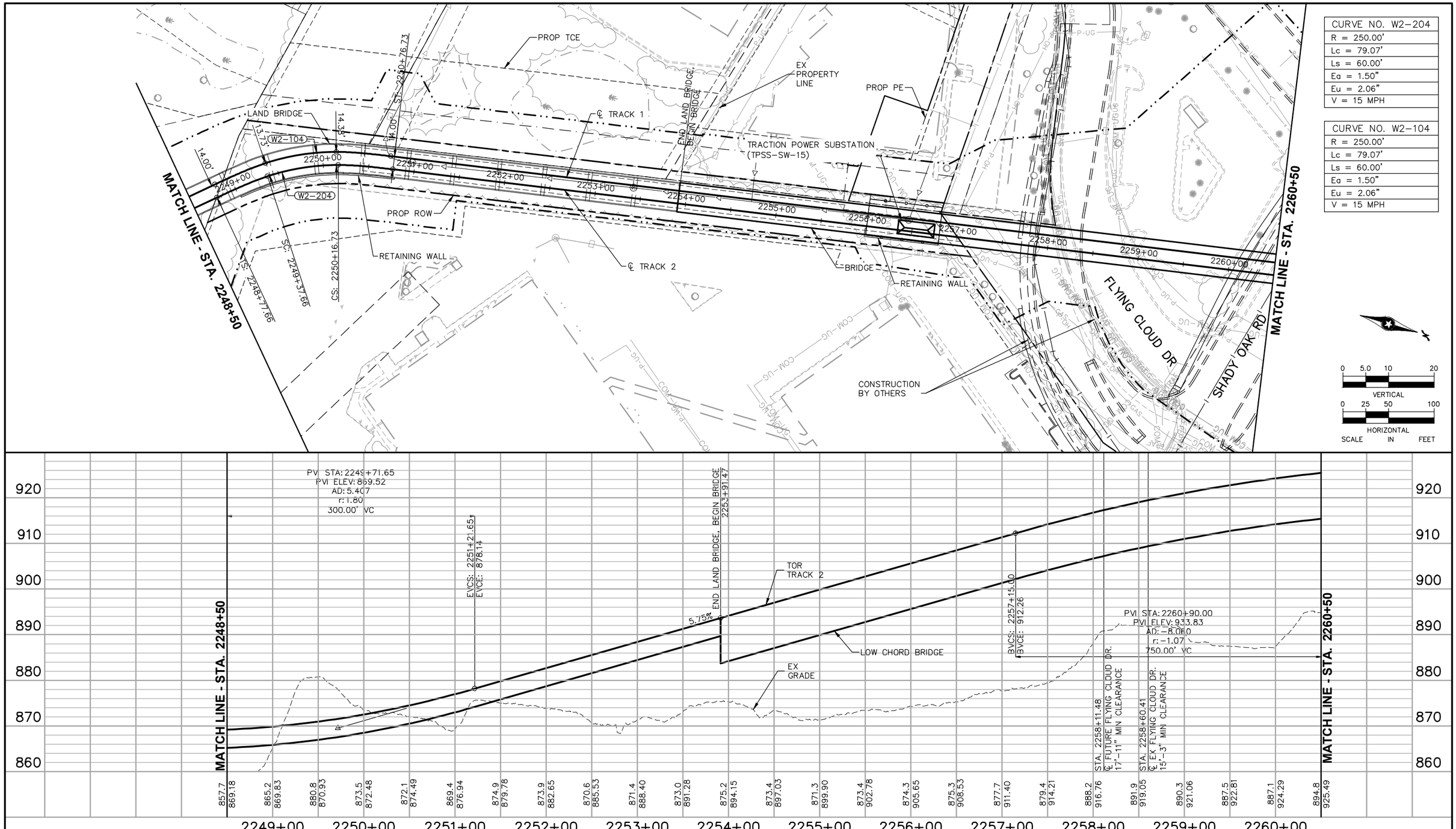

NO.	DATE	BY	CHECK	DESIGN	REVISION / SUBMITTAL
.	.	.	.	.	.
.	.	.	.	.	.
.	.	.	.	.	.
.	.	.	.	.	.
.	.	.	.	.	.
.	.	.	.	.	.
.	.	.	.	.	.
.	.	.	.	.	.
.	.	.	.	.	.

AECOM

PRELIMINARY ENGINEERING

METROPOLITAN COUNCIL

SOUTHWEST Green Line LRT Extension

WEST - VOLUME 1 (CIVIL) - SEGMENT 2
TRACK
PLAN AND PROFILE
STA. 2248+50 TO STA. 2260+50

DISCIPLINE: TRACK

SHEET NAME: W2-TRK-PPFL-004

SHEET 40 OF 107

Jul, 01 2014 01:11 pm V:\3200_PEC-W\CAD\SEGMENT-W2\SHEET\TRACK\W2-TRK-PLN.dwg By: yangdk

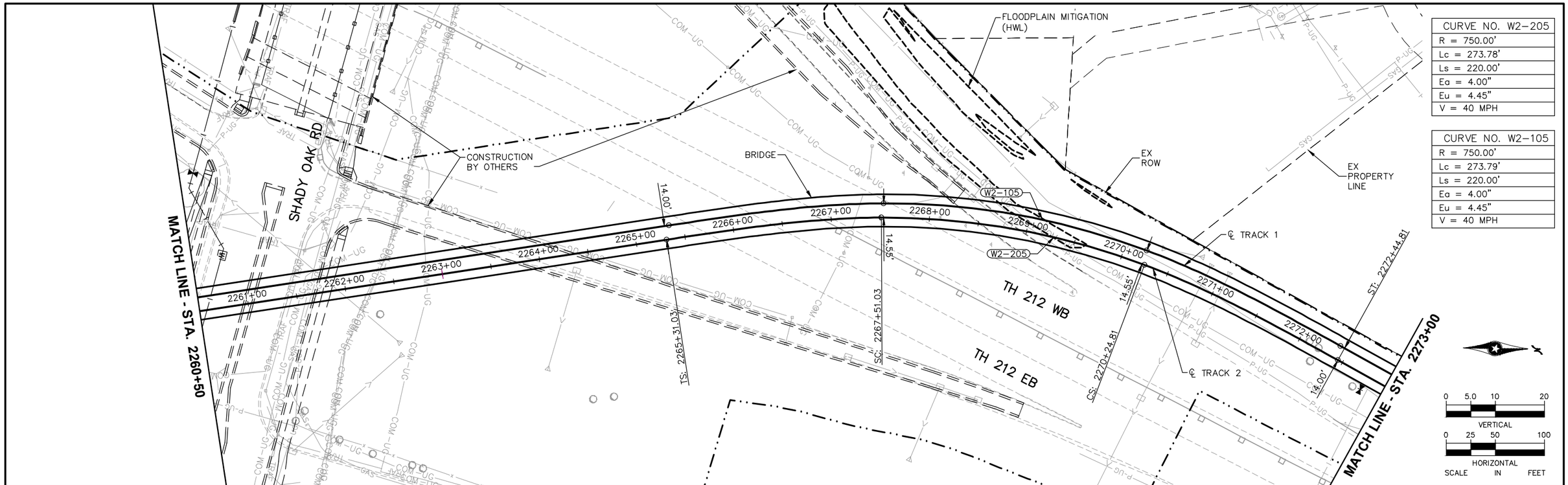

CURVE NO. W2-205
R = 750.00'
Lc = 273.78'
Ls = 220.00'
Ea = 4.00"
Eu = 4.45"
V = 40 MPH

CURVE NO. W2-105
R = 750.00'
Lc = 273.79'
Ls = 220.00'
Ea = 4.00"
Eu = 4.45"
V = 40 MPH

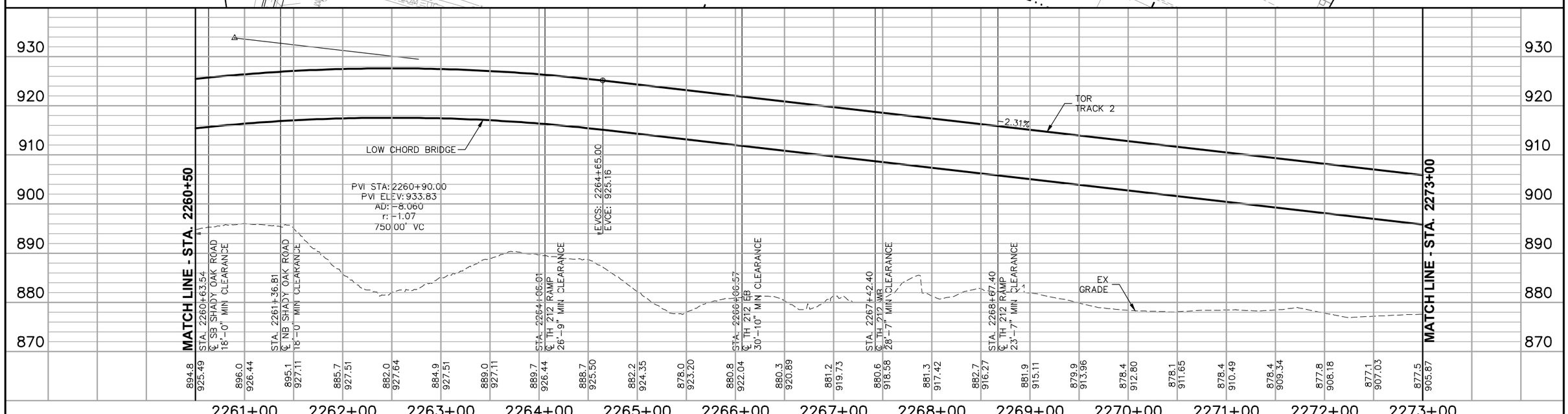

NO.	DATE	BY	CHECK	DESIGN	REVISION / SUBMITTAL
.	.	.	.	.	.
.	.	.	.	.	.
.	.	.	.	.	.
.	.	.	.	.	.
.	.	.	.	.	.
.	.	.	.	.	.
.	.	.	.	.	.
.	.	.	.	.	.
.	.	.	.	.	.

AECOM

PRELIMINARY ENGINEERING

METROPOLITAN COUNCIL

SOUTHWEST Green Line LRT Extension

WEST - VOLUME 1 (CIVIL) - SEGMENT 2
TRACK
PLAN AND PROFILE
STA. 2260+50 TO STA. 2273+00

DISCIPLINE: TRACK

SHEET NAME: W2-TRK-PPFL-005

SHEET 41 OF 107

Jul, 01 2014 01:11 pm V:\3200_PEC-W\CAD\SEGMENT-W2\SHEET\TRACK\W2-TRK-PLN.dwg By: yangdk

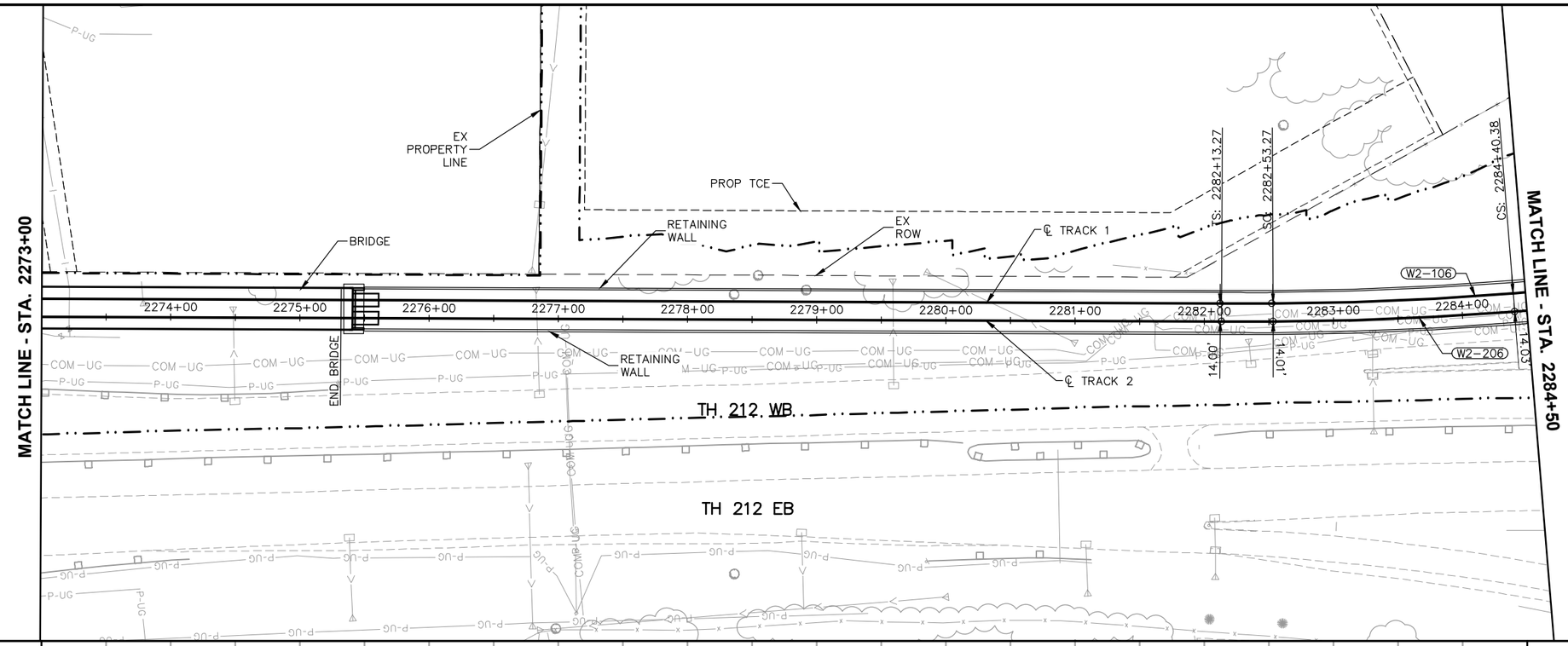

CURVE NO. W2-206
R = 2500.00'
Lc = 187.12'
Ls = 40.00'
Eq = 1.00"
Eu = 0.96"
V = 35 MPH

CURVE NO. W2-106
R = 2500.00'
Lc = 314.96'
Ls 1 = 40.00'
Ls 2 = 100.00'
Eq = 1.00"
Eu = 0.96"
V = 35 MPH

0 5.0 10 20
VERTICAL
0 25 50 100
HORIZONTAL
SCALE IN FEET

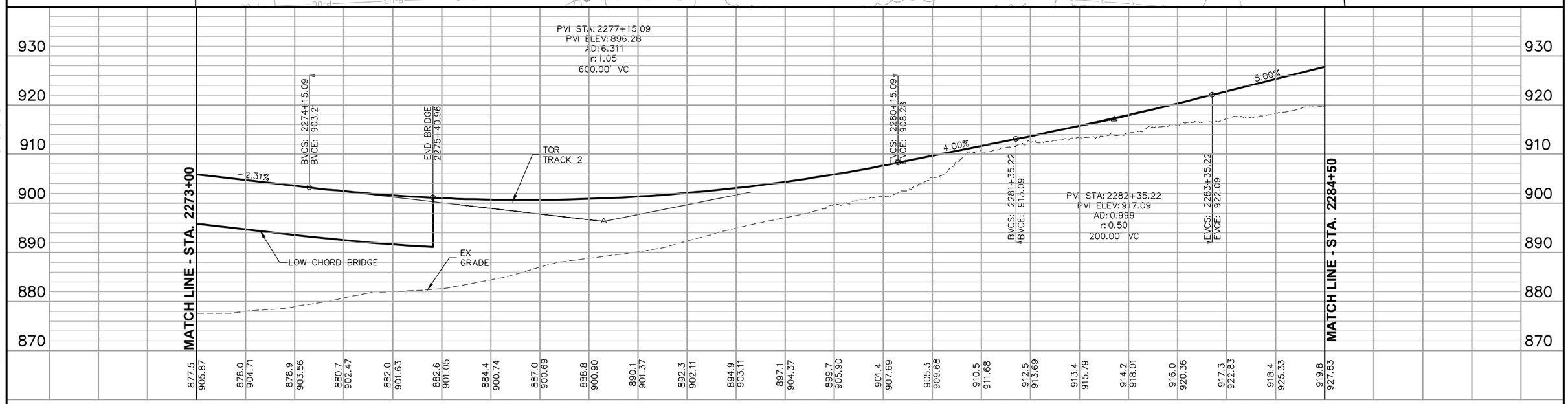

NO.	DATE	BY	CHECK	DESIGN	REVISION / SUBMITTAL
.	.	.	.	.	.
.	.	.	.	.	.
.	.	.	.	.	.
.	.	.	.	.	.
.	.	.	.	.	.
.	.	.	.	.	.
.	.	.	.	.	.
.	.	.	.	.	.
.	.	.	.	.	.
.	.	.	.	.	.

AECOM

PRELIMINARY ENGINEERING

METROPOLITAN COUNCIL

SOUTHWEST Green Line LRT Extension

WEST - VOLUME 1 (CIVIL) - SEGMENT 2
TRACK
PLAN AND PROFILE
STA. 2273+00 TO STA. 2284+50

DISCIPLINE: TRACK

SHEET NAME: W2-TRK-PPFL-006

CURVE NO. W2–207
R = 450.00'
Lc = 456.64'
Ls = 110.00'
Ea = 3.00"
Eu = 2.50"
V = 25 MPH

CURVE NO. W2–107
R = 450.00'
Lc = 443.23'
Ls 1 = 100.00'
Ls 2 = 90.00'
Ea = 3.00"
Eu = 2.50"
V = 25 MPH

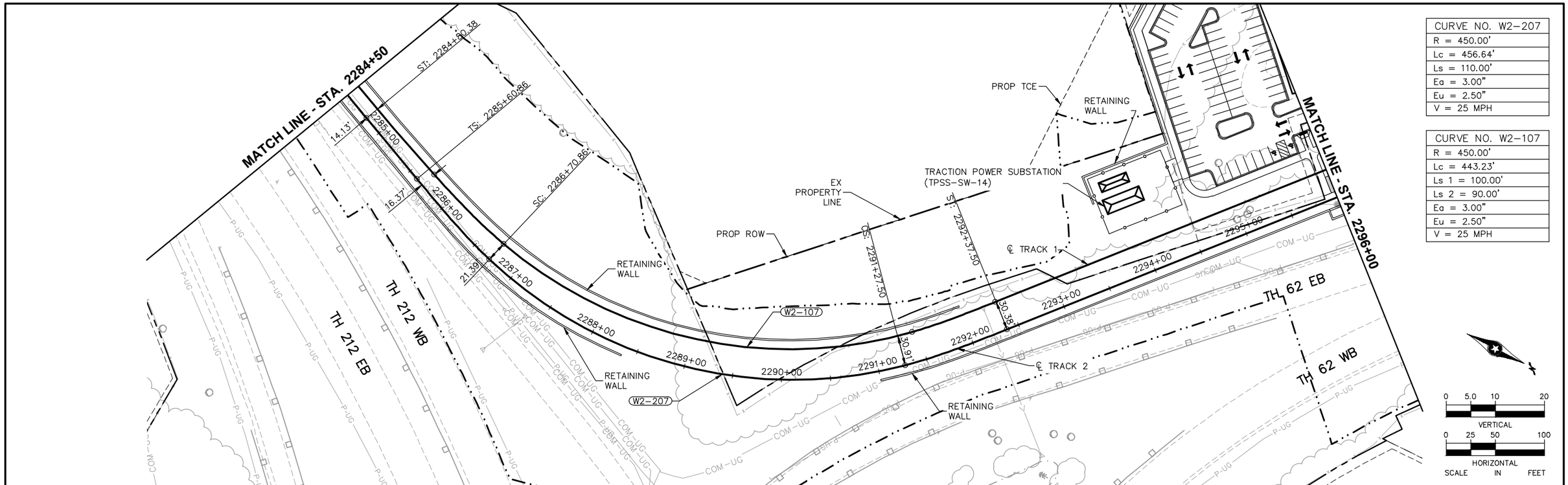

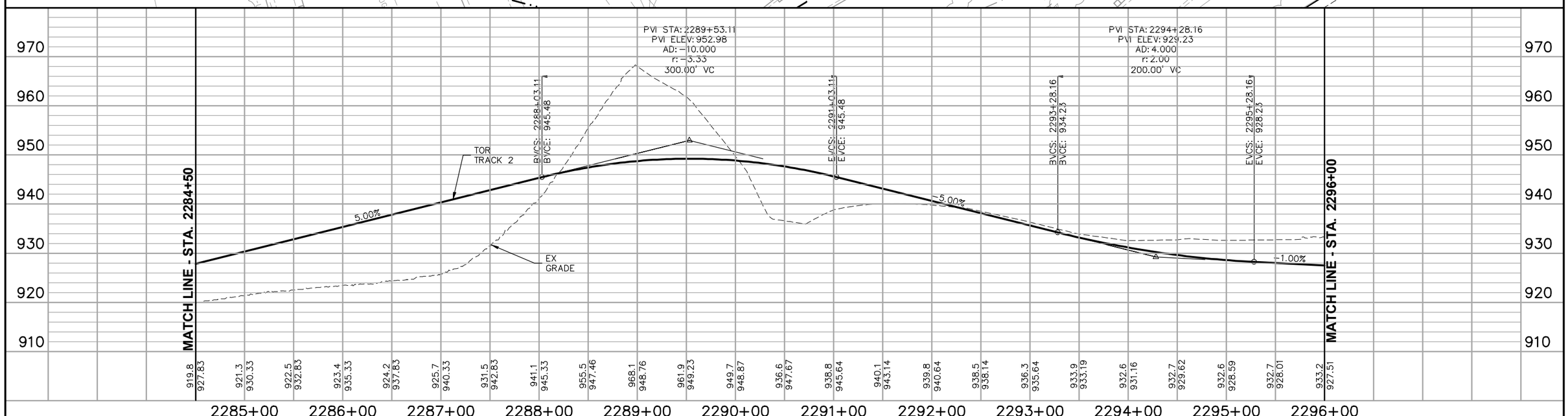

NO.	DATE	BY	CHECK	DESIGN	REVISION / SUBMITTAL
.	.	.	.	.	.
.	.	.	.	.	.
.	.	.	.	.	.
.	.	.	.	.	.
.	.	.	.	.	.
.	.	.	.	.	.
.	.	.	.	.	.
.	.	.	.	.	.
.	.	.	.	.	.

AECOM

PRELIMINARY ENGINEERING

METROPOLITAN COUNCIL

SOUTHWEST Green Line LRT Extension

WEST - VOLUME 1 (CIVIL) - SEGMENT 2
TRACK
PLAN AND PROFILE
STA. 2284+50 TO STA. 2296+00

DISCIPLINE: TRACK

SHEET NAME: W2-TRK-PPFL-007

SHEET 43 OF 107

Jul, 01 2014 01:12 pm V:\3200_PEC-W\CAD\SEGMENT-W2\SHEET\TRACK\W2-TRK-PLN.dwg By: yangdk

CURVE NO. W2–108
R = 1500.00'
Lc = 48.24'
Ls = 40.00'
Ea = 1.00"
Eu = 0.65"
V = 25 MPH

CURVE NO. W2–109
R = 1500.00'
Lc = 48.24'
Ls = 40.00'
Ea = 1.00"
Eu = 0.65"
V = 25 MPH

CURVE NO. W2–208
R = 800.00'
Lc = 589.82'
Ls = 170.00'
Ea = 3.50"
Eu = 2.56"
V = 35 MPH

CURVE NO. W2–110
R = 819.50'
Lc = 608.35'
Ls = 170.00'
Ea = 3.50"
Eu = 2.56"
V = 35 MPH

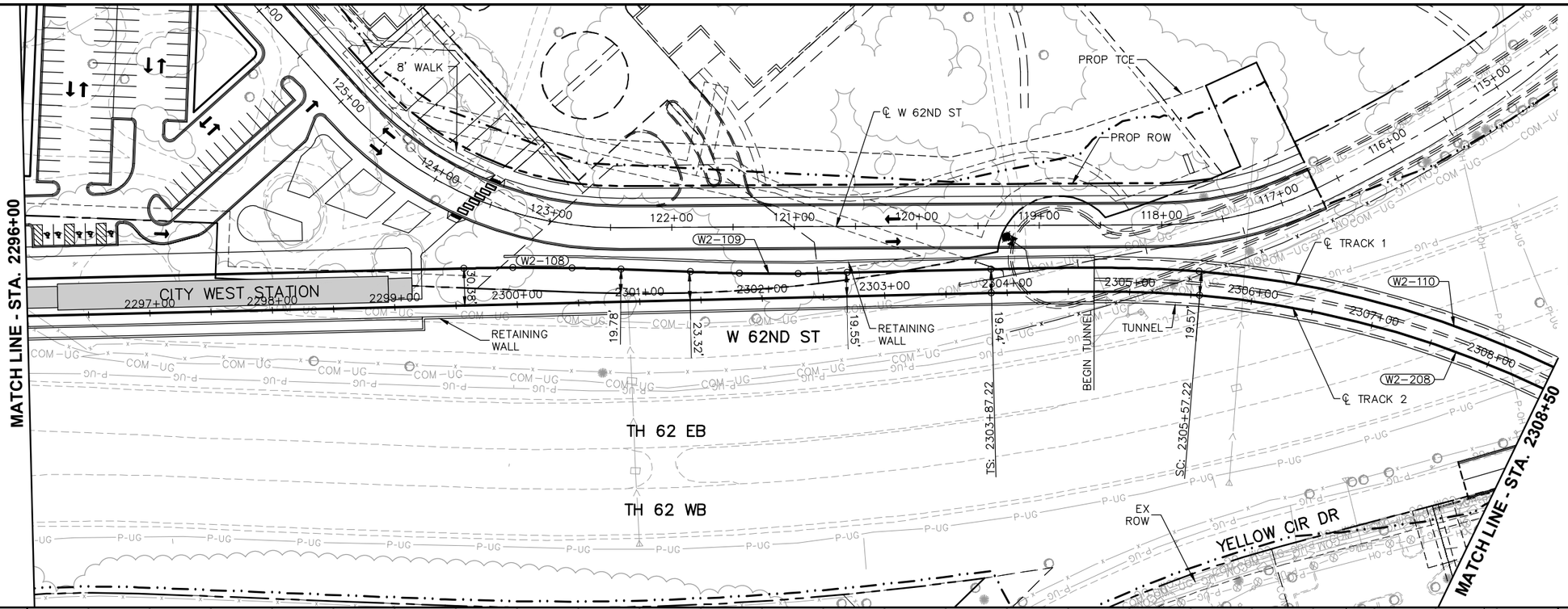

0 5.0 10 20
VERTICAL
0 25 50 100
HORIZONTAL
SCALE IN FEET

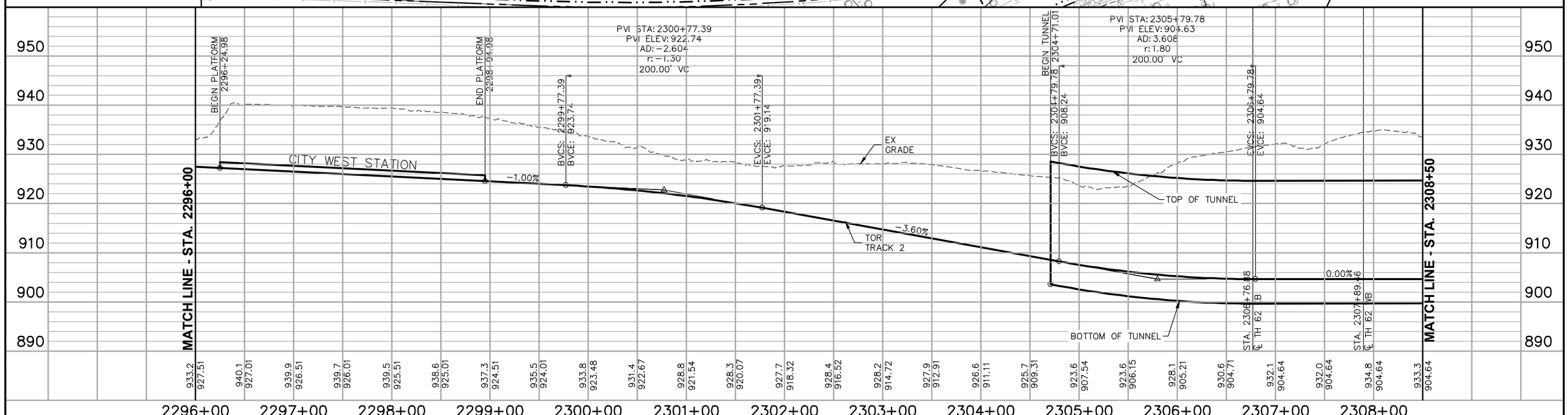

NO.	DATE	BY	CHECK	DESIGN	REVISION / SUBMITTAL
.	.	.	.	.	.
.	.	.	.	.	.
.	.	.	.	.	.
.	.	.	.	.	.
.	.	.	.	.	.
.	.	.	.	.	.
.	.	.	.	.	.
.	.	.	.	.	.
.	.	.	.	.	.
.	.	.	.	.	.

AECOM

PRELIMINARY ENGINEERING

METROPOLITAN COUNCIL

SOUTHWEST Green Line LRT Extension

WEST - VOLUME 1 (CIVIL) - SEGMENT 2
TRACK
PLAN AND PROFILE
STA. 2296+00 TO STA. 2308+50

DISCIPLINE: TRACK

SHEET NAME: W2-TRK-PPFL-008

SHEET 44 OF 107

Jul. 01 2014 01:13 pm V:\3200_PEC-W\CAD\SEGMENT-W2\SHEET\TRACK\W2-TRK-PLN.dwg By: yangdk

CURVE NO. W2–209
R = 3800'
Lc = 173.37'
Ls = 130'
Ea = 1.75"
Eu = 1.40"
V = 55 MPH

CURVE NO. W2–111
R = 3800'
Lc = 173.37'
Ls = 130'
Ea = 1.75"
Eu = 1.40"
V = 55 MPH

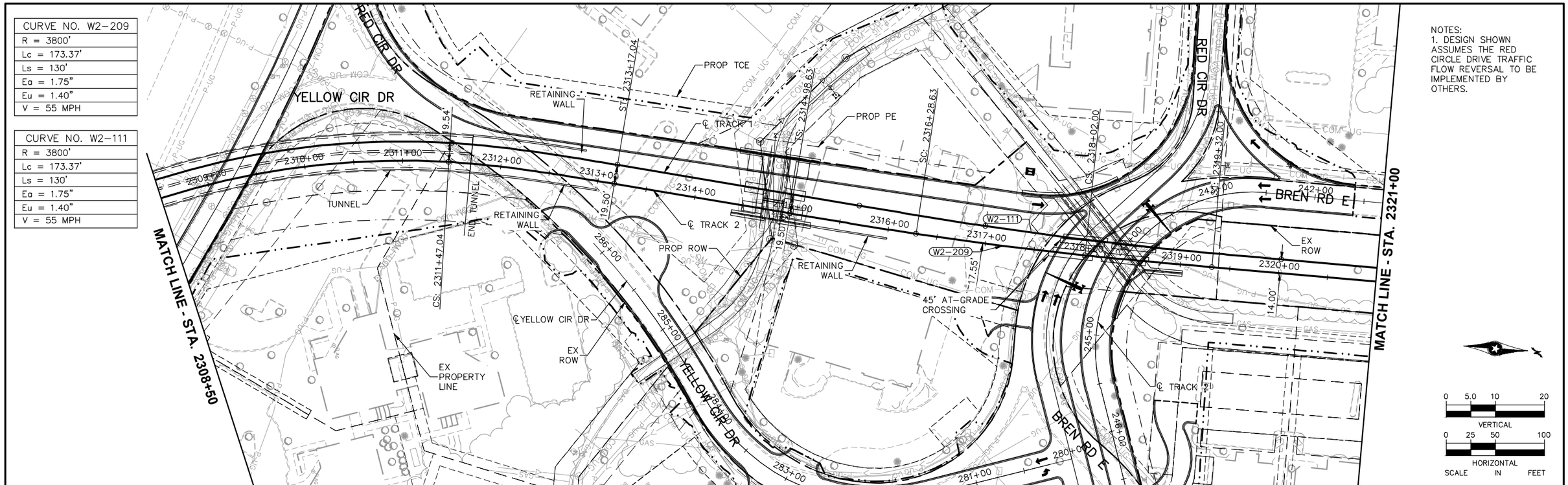

NOTES:
1. DESIGN SHOWN ASSUMES THE RED CIRCLE DRIVE TRAFFIC FLOW REVERSAL TO BE IMPLEMENTED BY OTHERS.

0 5.0 10 20 VERTICAL
0 25 50 100 HORIZONTAL
SCALE IN FEET

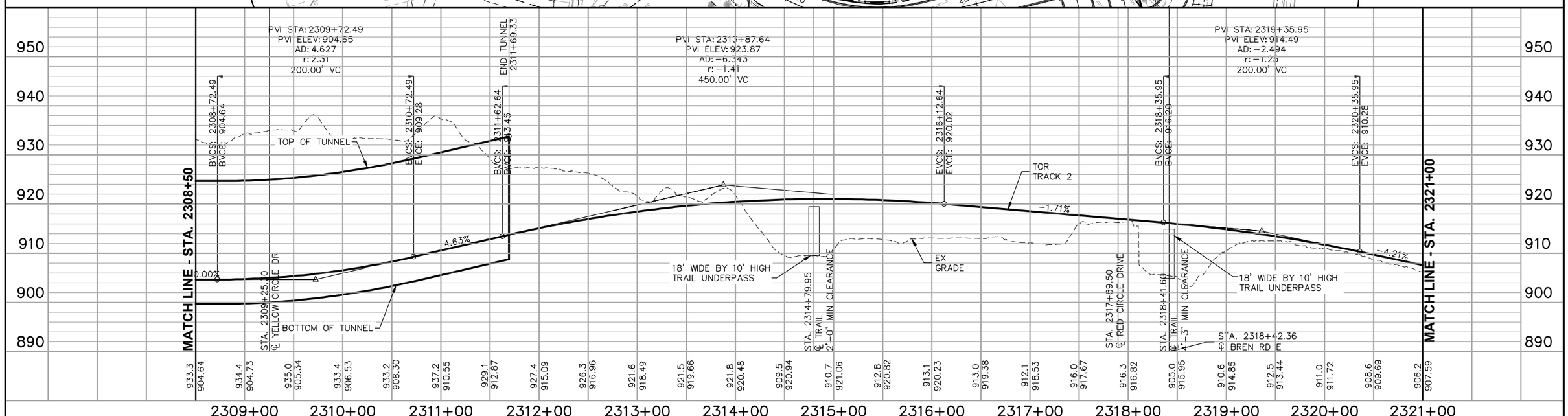

NO.	DATE	BY	CHECK	DESIGN	REVISION / SUBMITTAL
.	.	.	.	.	.
.	.	.	.	.	.
.	.	.	.	.	.
.	.	.	.	.	.
.	.	.	.	.	.
.	.	.	.	.	.
.	.	.	.	.	.
.	.	.	.	.	.
.	.	.	.	.	.

AECOM

PRELIMINARY ENGINEERING

METROPOLITAN COUNCIL

SOUTHWEST Green Line LRT Extension

WEST - VOLUME 1 (CIVIL) - SEGMENT 2
TRACK
PLAN AND PROFILE
STA. 2308+50 TO STA. 2321+00

DISCIPLINE: TRACK

SHEET NAME: W2-TRK-PPFL-009

SHEET 45 OF 107

Jul, 01 2014 01:13 pm V:\3200_PEC-W\CAD\SEGMENT-W2\SHEET\TRACK\W2-TRK-PLN.dwg By: yangdk

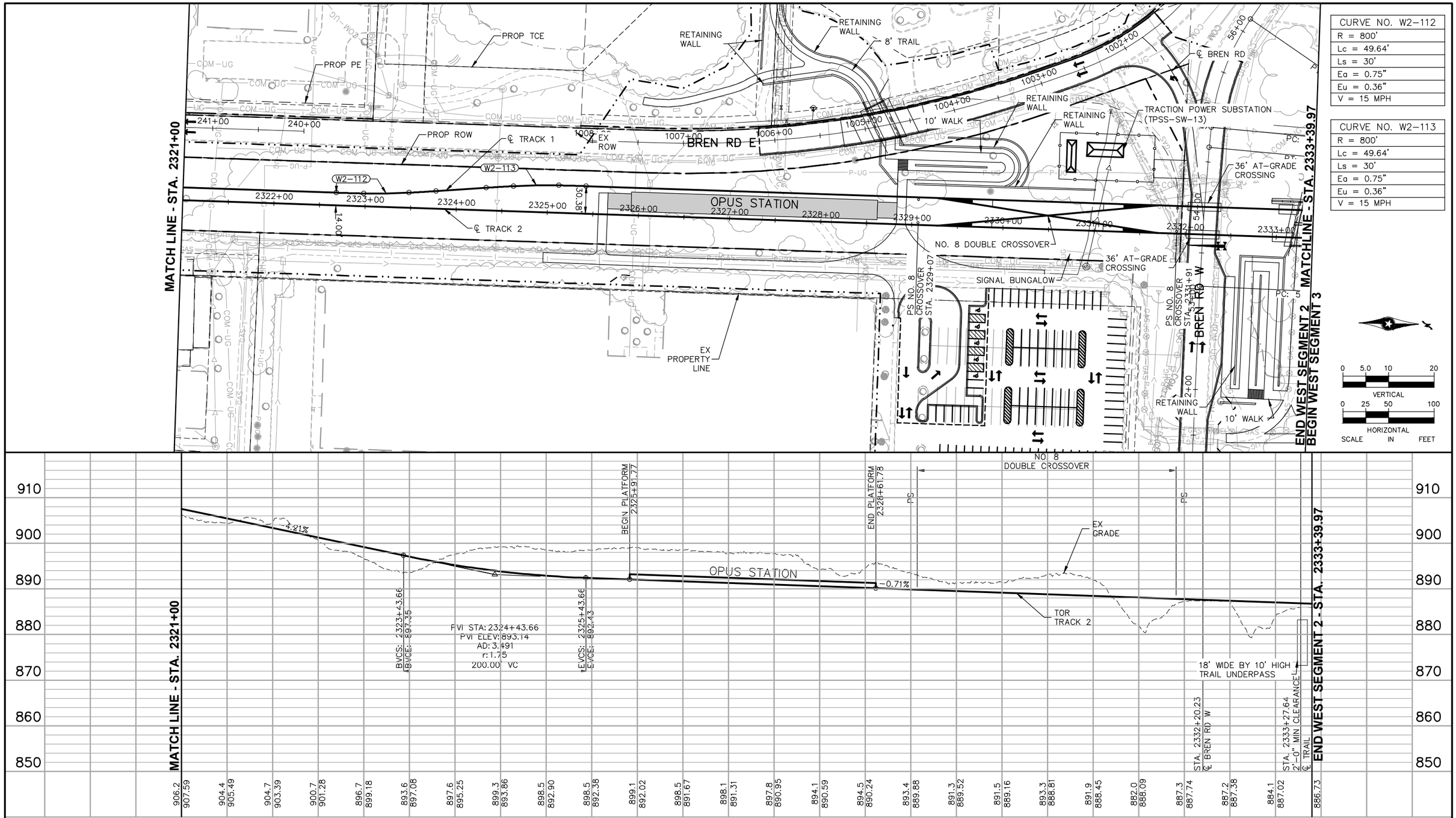

CURVE NO. W2-112
R = 800'
Lc = 49.64'
Ls = 30'
Ea = 0.75"
Eu = 0.36"
V = 15 MPH

CURVE NO. W2-113
R = 800'
Lc = 49.64'
Ls = 30'
Ea = 0.75"
Eu = 0.36"
V = 15 MPH

NO.	DATE	BY	CHECK	DESIGN	REVISION / SUBMITTAL
.	.	.	.	.	.
.	.	.	.	.	.
.	.	.	.	.	.
.	.	.	.	.	.
.	.	.	.	.	.
.	.	.	.	.	.
.	.	.	.	.	.
.	.	.	.	.	.
.	.	.	.	.	.

AECOM

PRELIMINARY ENGINEERING

METROPOLITAN COUNCIL

SOUTHWEST Green Line LRT Extension

WEST - VOLUME 1 (CIVIL) - SEGMENT 2
TRACK
PLAN AND PROFILE
STA. 2321+00 TO STA. 2333+39.97

DISCIPLINE: TRACK

SHEET NAME: W2-TRK-PPFL-010

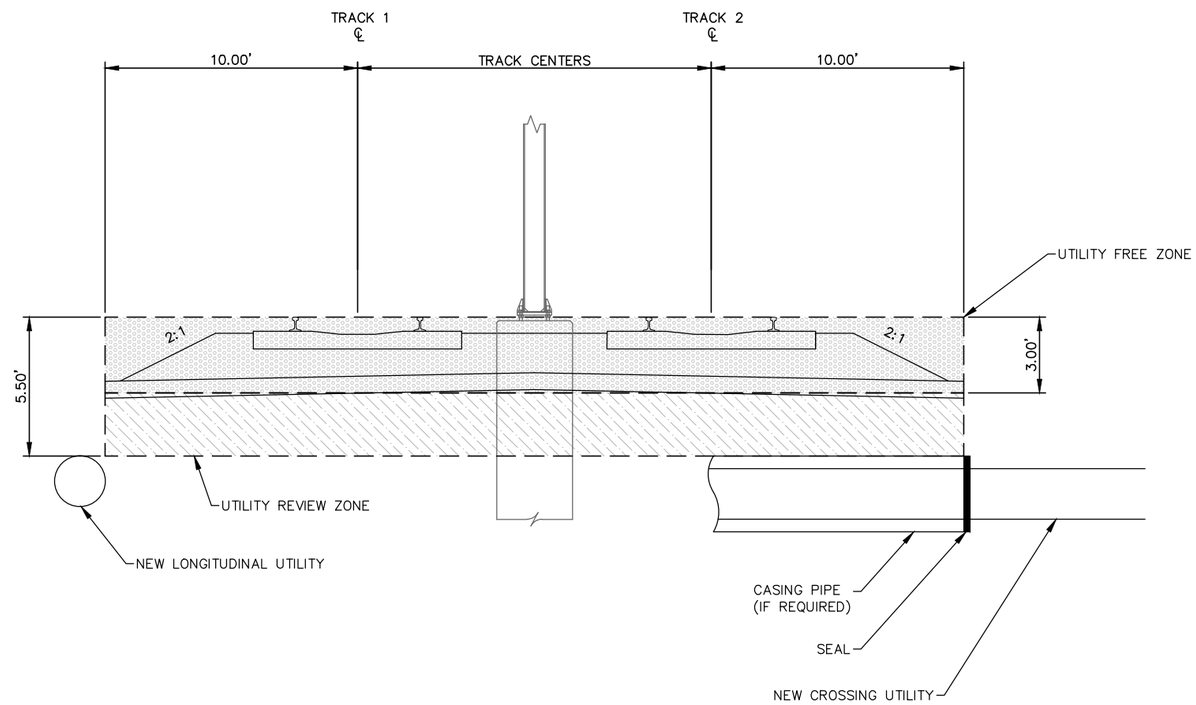

UTILITY ZONES
BALLASTED TRACK

NOTES:

1. ADJUSTMENTS OF LIMITS REQUIRE METROPOLITAN COUNCIL APPROVAL.
2. UTILITIES SUSCEPTIBLE TO EFFECTS OF STRAY CURRENT SHOULD BE RELOCATED FROM UTILITY REVIEW ZONE OR APPROPRIATE MITIGATION MEASURES SHOULD BE TAKEN.

0 1.5 3 6

NO.	DATE	BY	CHECK	DESIGN	REVISION / SUBMITTAL
.	.	.	.	.	.
.	.	.	.	.	.
.	.	.	.	.	.
.	.	.	.	.	.
.	.	.	.	.	.
.	.	.	.	.	.
.	.	.	.	.	.
.	.	.	.	.	.
.	.	.	.	.	.

AECOM

PRELIMINARY ENGINEERING

METROPOLITAN COUNCIL

SOUTHWEST Green Line LRT Extension

WEST - VOLUME 1 (CIVIL) - SEGMENT 2
TRACK
DETAILS

DISCIPLINE: TRACK

SHEET NAME: W2-TRK-DTL-001

SHEET 47 OF 107

Aug. 27 2014 04:28 pm V:\3200_PEC-W\CAD\SEGMENT-W2\SHEET\TRACK\W2-TRK-DTL.dwg By: MaurisokB

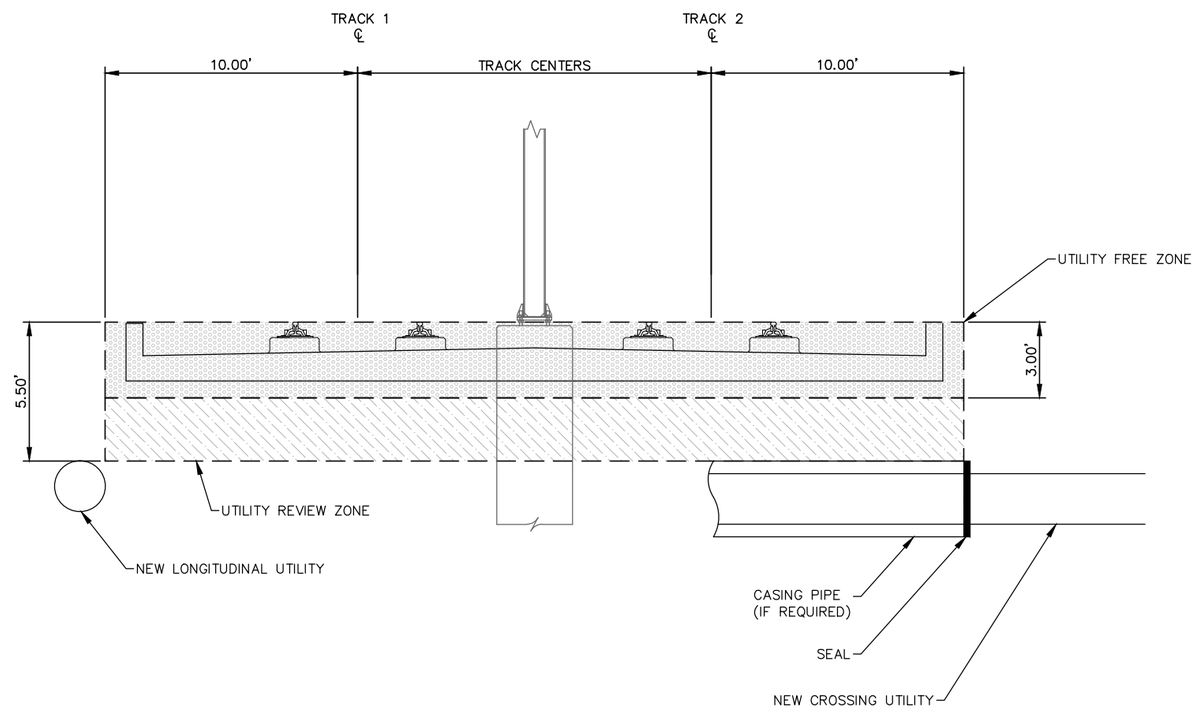

UTILITY ZONES
DIRECT FIXATION TRACK

NOTES:

1. ADJUSTMENTS OF LIMITS REQUIRE METROPOLITAN COUNCIL APPROVAL.
2. UTILITIES SUSCEPTIBLE TO EFFECTS OF STRAY CURRENT SHOULD BE RELOCATED FROM UTILITY REVIEW ZONE OR APPROPRIATE MITIGATION MEASURES SHOULD BE TAKEN.

0 1.5 3 6

NO.	DATE	BY	CHECK	DESIGN	REVISION / SUBMITTAL
.	.	.	.	.	.
.	.	.	.	.	.
.	.	.	.	.	.
.	.	.	.	.	.
.	.	.	.	.	.
.	.	.	.	.	.
.	.	.	.	.	.
.	.	.	.	.	.
.	.	.	.	.	.

AECOM

PRELIMINARY ENGINEERING

METROPOLITAN COUNCIL

SOUTHWEST Green Line LRT Extension

WEST - VOLUME 1 (CIVIL) - SEGMENT 2
TRACK
DETAILS

DISCIPLINE: TRACK

SHEET NAME: W2-TRK-DTL-002

SHEET 48 OF 107

Aug, 27 2014 04:28 pm V:\3200_PEC-W\CAD\SEGMENT-W2\SHEET\TRACK\W2-TRK-DTL.dwg By: MaurisokB

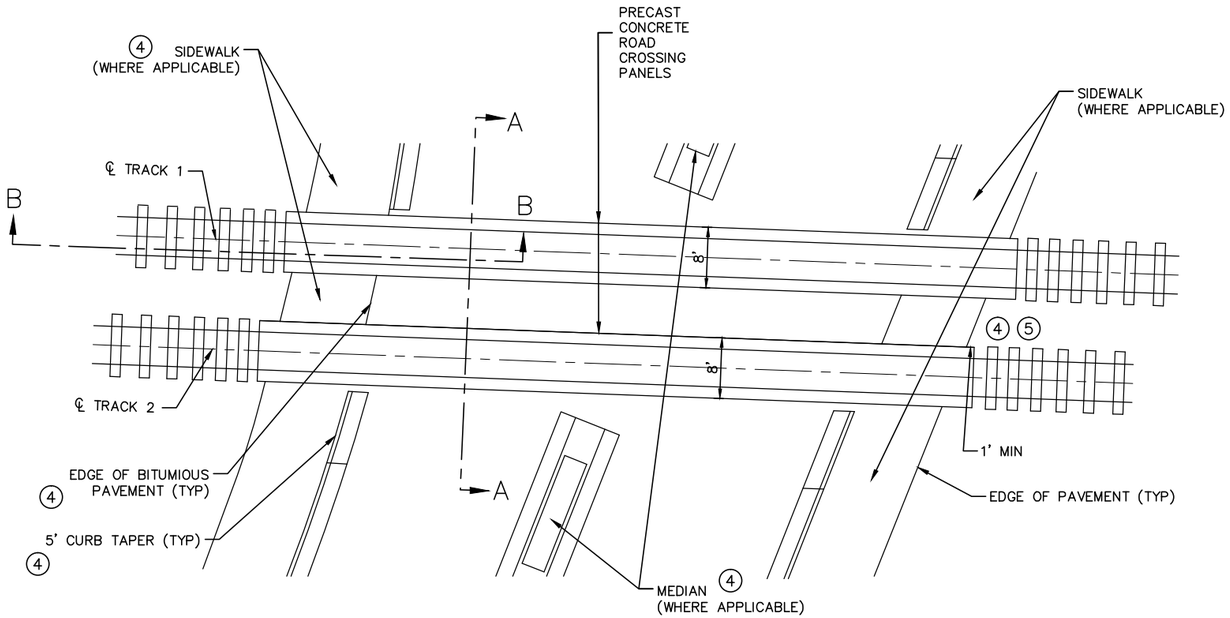

FULL DEPTH PRECAST GRADE CROSSING PANELS
PLAN VIEW

NOTES:

1. 6" HDPE PERFORATED SUB-DRAIN, WITH GEOTEXTILE SOCK.
2. 6" HDPE PERFORATED BALLAST DRAIN PIPE, WITH GEOTEXTILE SOCK CONNECT TO MAINLINE BALLAST DRAIN.
3. DEPTH OF EXCAVATION WILL VARY DEPENDING ON SOILS CONDITION AND COORDINATION WITH GEOTECHNICAL ENGINEER.
4. SEE CIVIL PLANS AND TYPICAL SECTIONS FOR ADDITIONAL INFORMATION.
5. WHERE SIDEWALK WILL NOT BE CONSTRUCTED, ROAD CROSSING PANELS SHALL EXTEND A MINIMUM OF 1' BEYOND THE BACK OF CURB, OR EDGE OF ROAD.

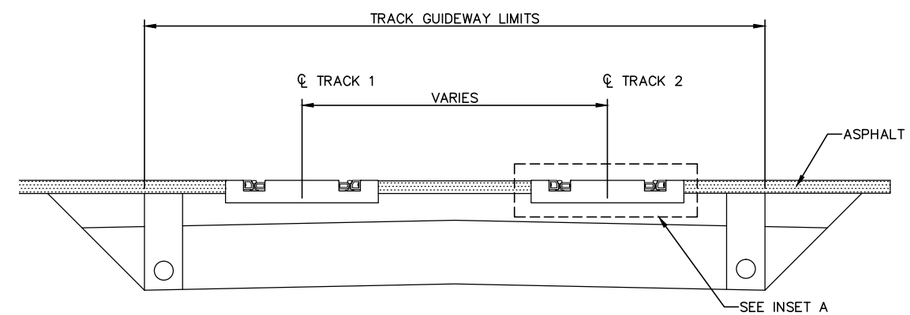

SECTION A–A

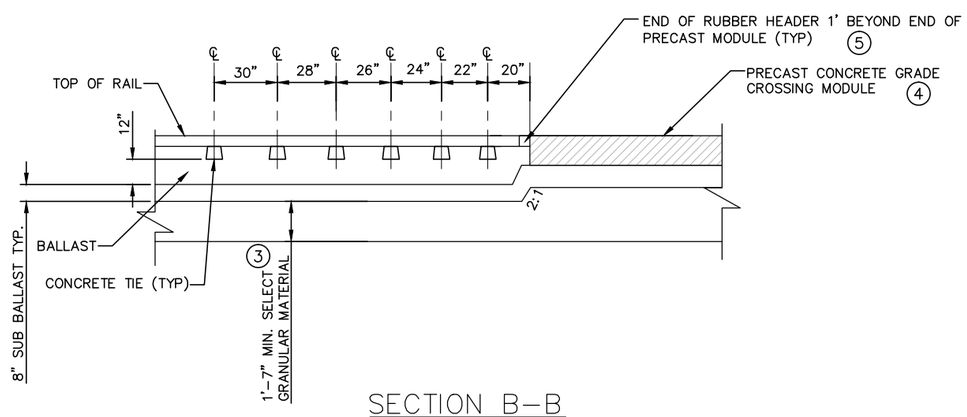

SECTION B–B

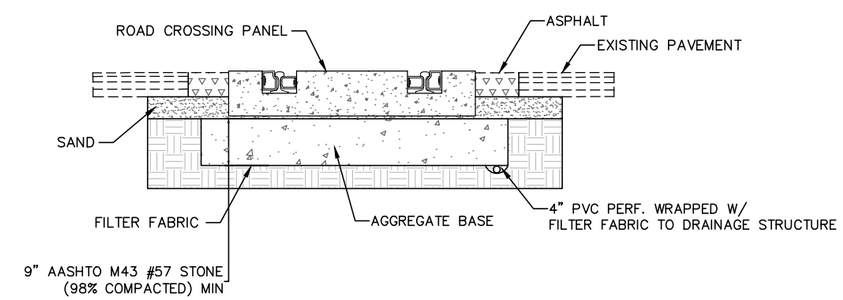

INSET A

PLATFORM TYPE ROAD CROSSING PANEL

NO.	DATE	BY	CHECK	DESIGN	REVISION / SUBMITTAL
.	.	.	.	.	.
.	.	.	.	.	.
.	.	.	.	.	.
.	.	.	.	.	.
.	.	.	.	.	.
.	.	.	.	.	.
.	.	.	.	.	.
.	.	.	.	.	.
.	.	.	.	.	.

AECOM

PRELIMINARY ENGINEERING

METROPOLITAN COUNCIL

SOUTHWEST Green Line LRT Extension

WEST - VOLUME 1 (CIVIL) - SEGMENT 2
TRACK
DETAILS

DISCIPLINE: TRACK

SHEET NAME: W2-TRK-DTL-003

SHEET 49 OF 107

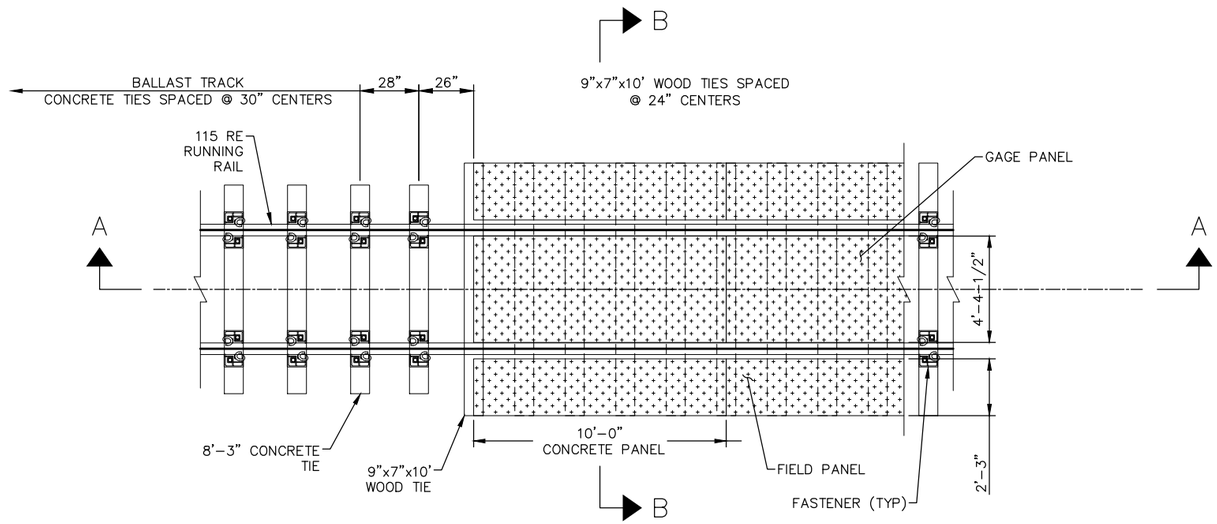

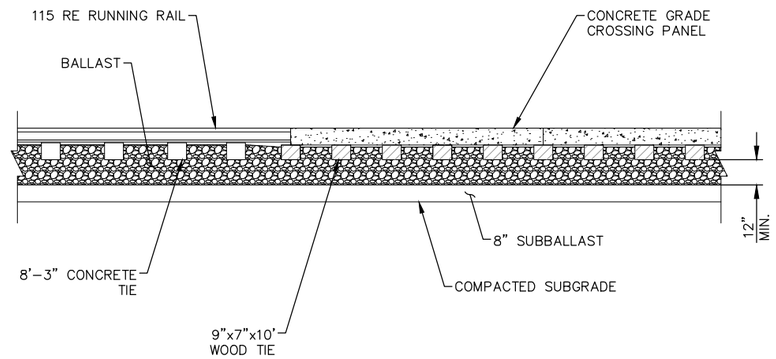

SECTION A–A

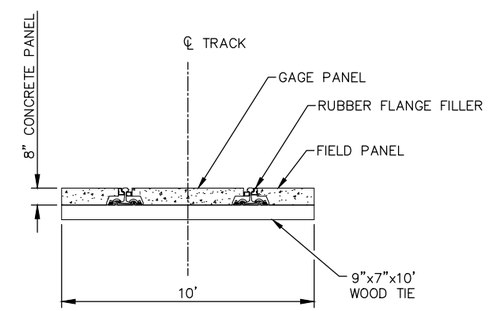

SECTION B–B

NOTE:

1. DRAIN TILE NOT SHOWN FOR CLARITY.

ROAD CROSSING WITH CONCRETE PANEL ON 10' WOOD TIES
(NTS)

NO.	DATE	BY	CHECK	DESIGN	REVISION / SUBMITTAL
.	.	.	.	.	.
.	.	.	.	.	.
.	.	.	.	.	.
.	.	.	.	.	.
.	.	.	.	.	.
.	.	.	.	.	.
.	.	.	.	.	.
.	.	.	.	.	.
.	.	.	.	.	.

AECOM

PRELIMINARY ENGINEERING

METROPOLITAN COUNCIL

SOUTHWEST Green Line LRT Extension

WEST - VOLUME 1 (CIVIL) - SEGMENT 2
TRACK
DETAILS

DISCIPLINE: **TRACK**

SHEET NAME: **W2-TRK-DTL-004**

SHEET 50 OF 107

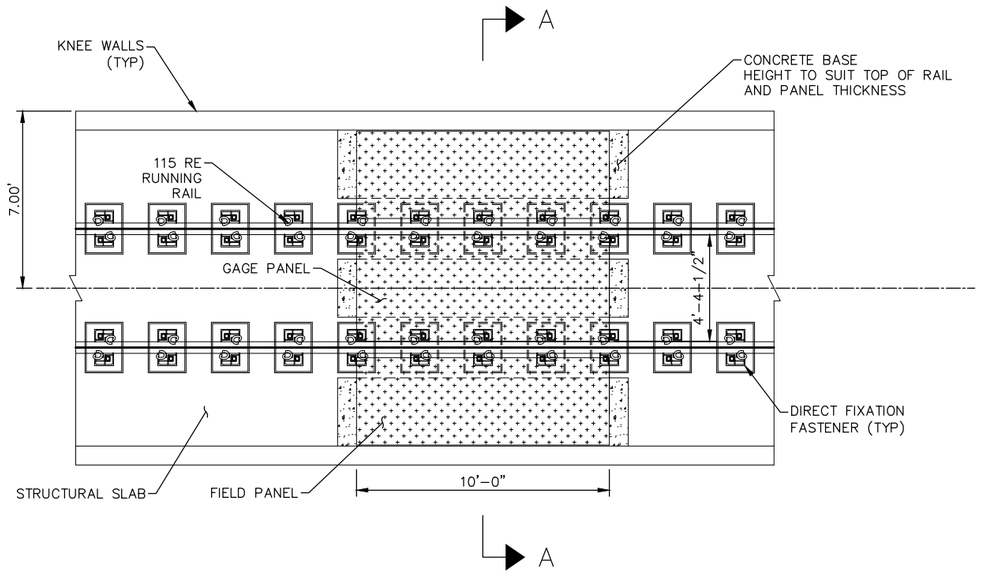

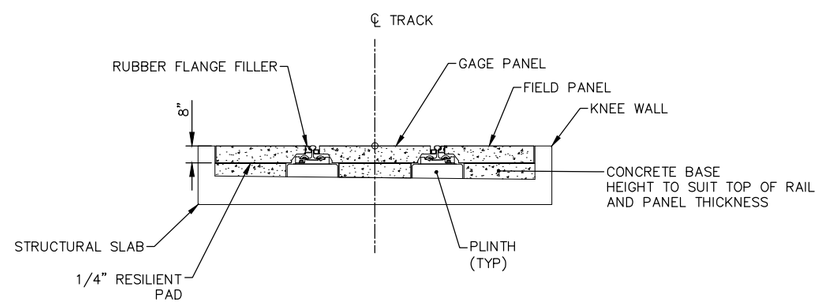

SECTION A–A

PEDESTRIAN CROSSING PANEL AT DIRECT FIXATION
(NTS)

NO.	DATE	BY	CHECK	DESIGN	REVISION / SUBMITTAL
.	.	.	.	.	.
.	.	.	.	.	.
.	.	.	.	.	.
.	.	.	.	.	.
.	.	.	.	.	.
.	.	.	.	.	.
.	.	.	.	.	.
.	.	.	.	.	.
.	.	.	.	.	.

AECOM

PRELIMINARY ENGINEERING

METROPOLITAN COUNCIL

SOUTHWEST Green Line LRT Extension

WEST - VOLUME 1 (CIVIL) - SEGMENT 2
TRACK
DETAILS

DISCIPLINE: **TRACK**

SHEET NAME: **W2-TRK-DTL-005**

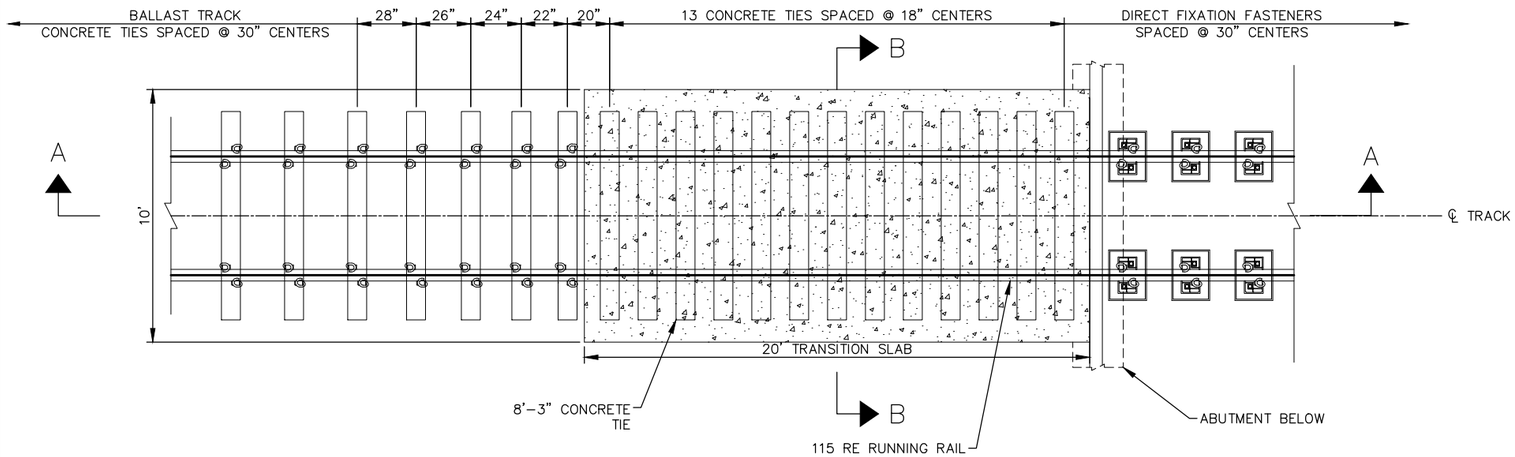

PLAN VIEW

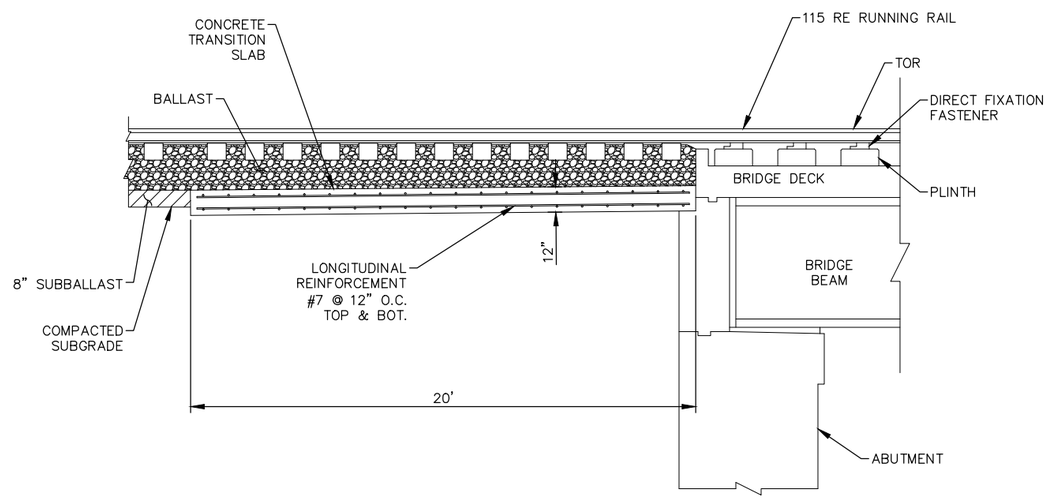

SECTION A–A

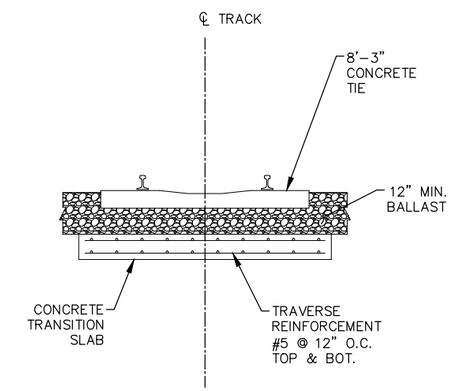

SECTION B–B

NOTE:

1. DRAIN TILE NOT SHOWN FOR CLARITY.

BALLAST TRACK TRANSITION SLAB AT DIRECT FIXATION BRIDGE
(NTS)

NO.	DATE	BY	CHECK	DESIGN	REVISION / SUBMITTAL
.	.	.	.	.	.
.	.	.	.	.	.
.	.	.	.	.	.
.	.	.	.	.	.
.	.	.	.	.	.
.	.	.	.	.	.
.	.	.	.	.	.
.	.	.	.	.	.
.	.	.	.	.	.

AECOM

PRELIMINARY ENGINEERING

METROPOLITAN COUNCIL

SOUTHWEST Green Line LRT Extension

WEST - VOLUME 1 (CIVIL) - SEGMENT 2
TRACK
DETAILS

DISCIPLINE: TRACK

SHEET NAME: W2-TRK-DTL-006

SHEET 52 OF 107

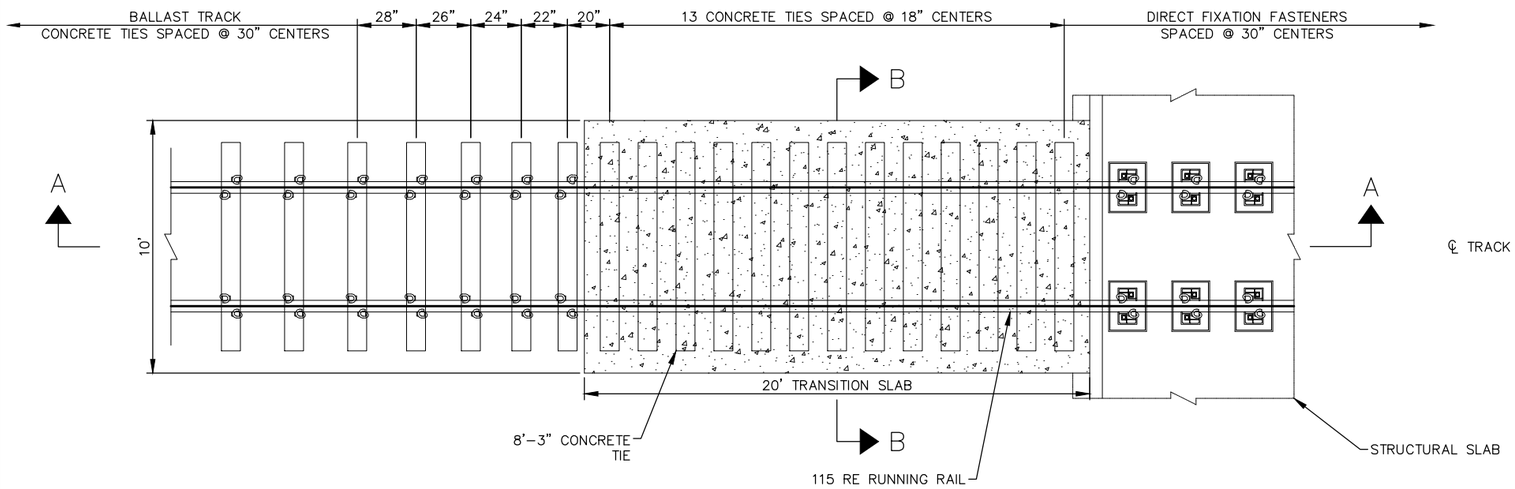

PLAN VIEW

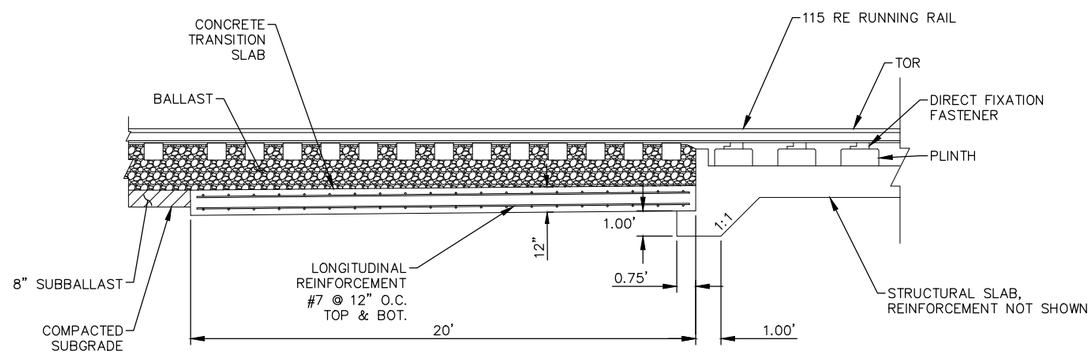

SECTION A-A

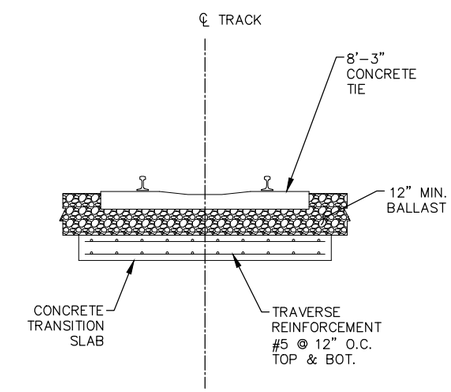

SECTION B-B

NOTE:

1. DRAIN TILE NOT SHOWN FOR CLARITY.

BALLAST TRACK TRANSITION SLAB AT DIRECT FIXATION TRACK
(NTS)

NO.	DATE	BY	CHECK	DESIGN	REVISION / SUBMITTAL
.	.	.	.	.	.
.	.	.	.	.	.
.	.	.	.	.	.
.	.	.	.	.	.
.	.	.	.	.	.
.	.	.	.	.	.
.	.	.	.	.	.
.	.	.	.	.	.
.	.	.	.	.	.
.	.	.	.	.	.

AECOM

PRELIMINARY ENGINEERING

METROPOLITAN COUNCIL

SOUTHWEST Green Line LRT Extension

WEST - VOLUME 1 (CIVIL) - SEGMENT 2
TRACK
DETAILS

DISCIPLINE: TRACK

SHEET NAME: W2-TRK-DTL-007

SHEET 53 OF 107

Aug, 27 2014 04:29 pm V:\3200_PEC-W\CAD\SEGMENT-W2\SHEET\TRACK\W2-TRK-DTL.dwg By: MaurisakB

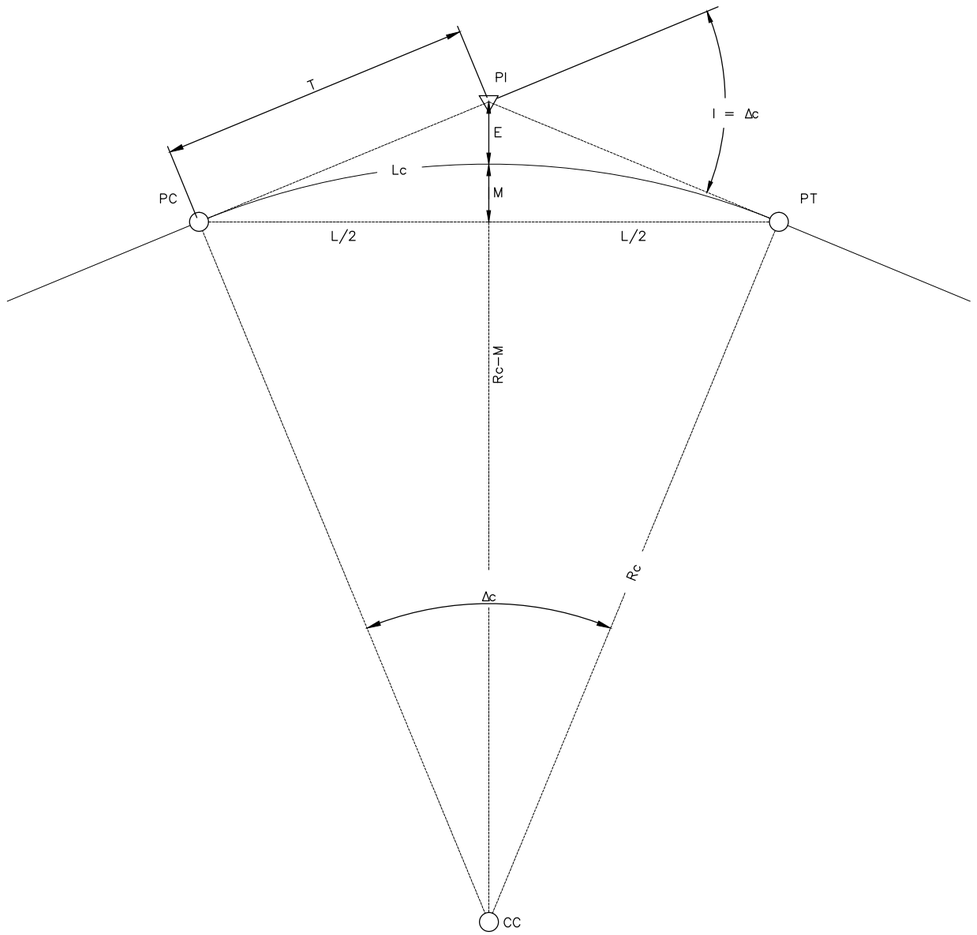

SIMPLE CURVE DIAGRAM

DEFINITIONS

Dc = DEGREE OF CURVE IN ARC DEFINITION (DECIMAL DEGREES)
Rc = RADIUS OF CURVE (FEET)
Lc = LENGTH OF CURVE ALONG THE ARC (FEET)
Δc = CENTRAL ANGLE OF CURVE (DECIMAL DEGREES)
E = EXTERNAL DISTANCE (FEET)
T = TANGENT DISTANCE (FEET)
M = MIDDLE ORDINATE (FEET)
L = CHORD LENGTH (FEET)
I = DEFLECTION ANGLE (DECIMAL DEGREES)
PC = POINT OF CURVE
PT = POINT OF TANGENT
PI = POINT OF INTERSECTION
CC = CENTER OF CURVE

SIMPLE CURVE FORMULAS

$$\frac{Dc}{360^\circ} = \frac{100}{2\pi\ Rc}$$

$$Dc = \frac{5729.58'}{Rc}$$

$$Lc = \frac{\pi Rc \Delta c}{180}$$

$$T = Rc\ TAN\ \tfrac{I}{2}$$

$$E = Rc\ SEC\tfrac{I}{2} - Rc$$

$$M = Rc - Rc\ COS\tfrac{I}{2}$$

$$L = 2\ Rc\ SIN\tfrac{I}{2}$$

NOTE
THIS DRAWING IS APPLICABLE TO SIMPLE CURVES WITHOUT TRANSITION SPIRALS AND SHALL ONLY BE USED ON NON–REVENUE TRACK.

NO.	DATE	BY	CHECK	DESIGN	REVISION / SUBMITTAL
.	.	.	.	.	.
.	.	.	.	.	.
.	.	.	.	.	.
.	.	.	.	.	.
.	.	.	.	.	.
.	.	.	.	.	.
.	.	.	.	.	.
.	.	.	.	.	.
.	.	.	.	.	.

AECOM

PRELIMINARY ENGINEERING

METROPOLITAN COUNCIL

SOUTHWEST Green Line LRT Extension

WEST - VOLUME 1 (CIVIL) - SEGMENT 2
TRACK
DETAILS

DISCIPLINE: TRACK

SHEET NAME: W2-TRK-DTL-008

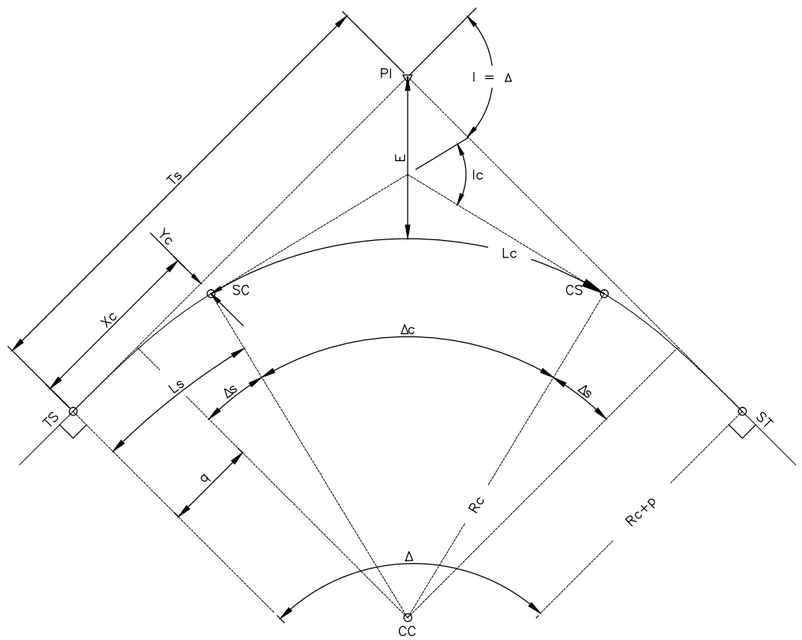

SPIRAL CURVE DIAGRAM

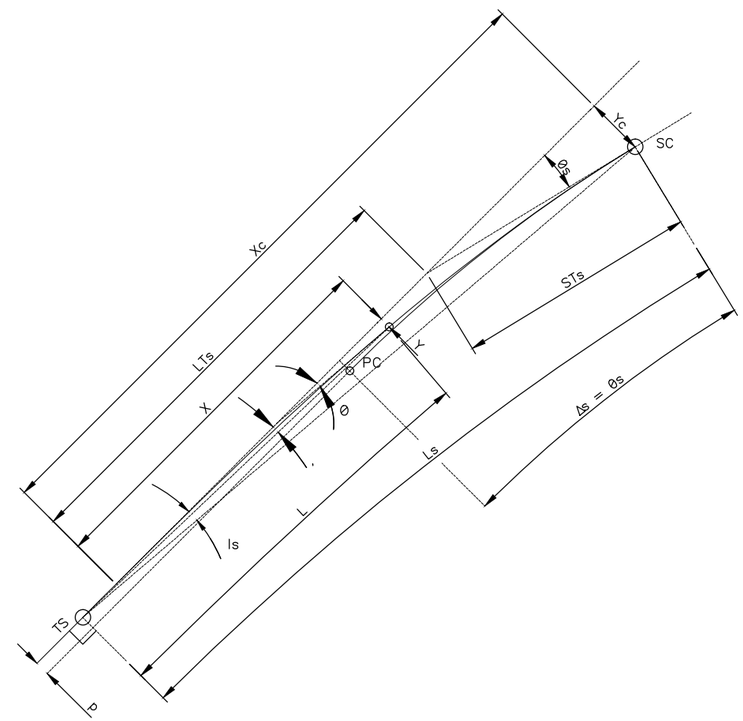

SPIRAL DIAGRAM

DEFINITIONS

Dc = DEGREE OF SIMPLE CURVE IN ARC DEFINITION (DEGREES)
Rc = RADIUS OF CURVE (FEET)
Δ = TOTAL CENTRAL ANGLE OF CURVE (DEGREES)
Δc = CENTRAL ANGLE OF SIMPLE CURVE (DEGREES)
Δs = CENTRAL ANGLE OF SPIRAL (RADIANS)
E = EXTERNAL DISTANCE OF THE SIMPLE CURVE (FEET)
Ts = TOTAL TANGENT DISTANCE (FEET)
Ls = LENGTH OF SPIRAL (FEET)
Lc = LENGTH OF THE SIMPLE CURVE ARC (FEET)
L = LENGTH FROM TS TO ANY POINT ALONG THE SPIRAL (FEET)
I = TOTAL DEFLECTION ANGLE (DEGREES)
Ic = DEFLECTION ANGLE OF THE SIMPLE CURVE (DEGREES)
Is = DEFLECTION ANGLE OF THE SPIRAL (DEGREES)
i = DEFLECTION ANGLE FROM TS TO ANY POINT ON THE SPIRAL
p = LENGTH OF THROW, OFFSET DISTANCE FROM TANGENT TO PC/PT
q = DISTANCE FROM TS/ST TO THE OFFSET TC/CT
Xc = DISTANCE ALONG TANGENT FROM TS/ST TO THE SC/CS (FEET)
Yc = OFFSET DISTANCE FROM TANGENT TO SC/CS (FEET)
X = DISTANCE ALONG TANGENT FROM TS/ST TO ANY POINT ON THE SPIRAL
Y = OFFSET DISTANCE FROM TANGENT TO ANY POINT ON THE SPIRAL
θs = SPIRAL ANGLE FROM TANGENT TO SC
θ = SPIRAL ANGLE FROM TANGENT TO ANY POINT ON THE SPIRAL
LTs = LONG TANGENT OF SPIRAL (FEET)
STs = SHORT TANGENT OF SPIRAL (FEET)
TS = POINT OF TANGENT TO SPIRAL CURVE
SC = POINT OF SPIRAL CURVE TO SIMPLE CURVE
CS = POINT OF SIMPLE CURVE TO SPIRAL CURVE
ST = POINT OF SPIRAL CURVE TO TANGENT
PC = POINT OF CURVE
PT = POINT OF TANGENT
PI = POINT OF INTERSECTION
CC = CENTER OF CURVE

FORMULAS

$\Delta = \Delta c + 2\Delta s$

$\Delta s = \frac{Ls}{2Rc}$

$i = \frac{\theta}{3}$

$X = L - \frac{L^5}{40Rc^2 Ls^2}$

$Xc = Ls - \frac{Ls^3}{40Rc^2}$

$Y = \frac{L^3}{6RcLs}$

$Yc = \frac{Ls^2}{6Rc}$

$q = Xc - Rc\ SIN\Delta s$

$p = \frac{1}{4}Yc = \frac{Ls^2}{24Rc}$

$Ts = (Rc + p)\ TAN\frac{\Delta}{2} + q$

$E = \frac{Rc + p}{COS\frac{\Delta}{2}} - Rc$

$LTs = Xc - \frac{Yc}{TAN\Delta s}$

$STs = \frac{Yc}{SIN\Delta s}$

$\frac{Dc}{360^\circ} = \frac{100}{2\pi\ Rc}$

$Dc = \frac{5729.58'}{Rc}$

$Lc = \frac{\pi Rc\Delta c}{180}$

NO.	DATE	BY	CHECK	DESIGN	REVISION / SUBMITTAL
.	.	.	.	.	.
.	.	.	.	.	.
.	.	.	.	.	.
.	.	.	.	.	.
.	.	.	.	.	.
.	.	.	.	.	.
.	.	.	.	.	.
.	.	.	.	.	.
.	.	.	.	.	.

AECOM

PRELIMINARY ENGINEERING

METROPOLITAN COUNCIL

SOUTHWEST Green Line LRT Extension

WEST - VOLUME 1 (CIVIL) - SEGMENT 2
TRACK
DETAILS

DISCIPLINE: TRACK

SHEET NAME: W2-TRK-DTL-009

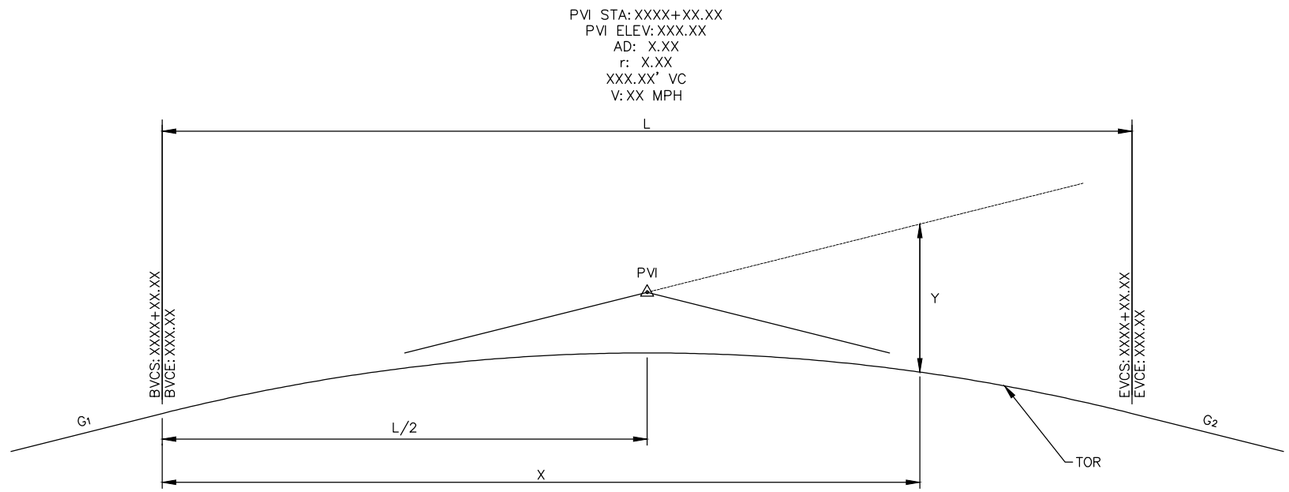

STANDARD VERTICAL CURVE

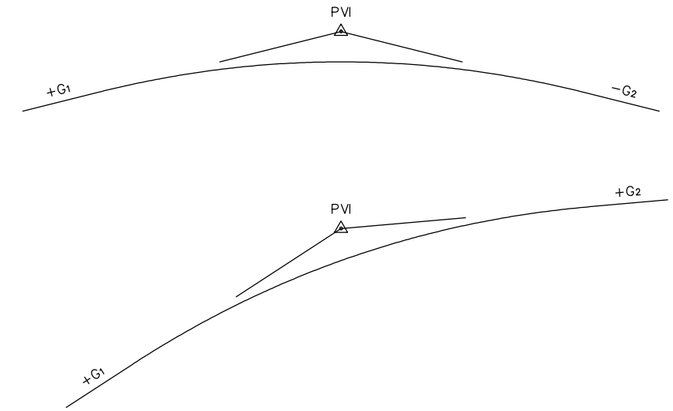

CREST TYPE VERTICAL CURVES

DEFINITIONS

G_1 = ENTRY GRADE %
G_2 = DEPARTING GRADE %
PVI = POINT OF VERTICAL INTERSECTION
AD = ALGEBRAIC DIFFERENCE
r = RATE OF CHANGE OF GRADE
L = LENGTH OF VERTICAL CURVE
V = DESIGN VELOCITY (MPH)
BVCS = BEGIN VERTICAL CURVE STATION
BVCE = BEGIN VERTICAL CURVE ELEVATION
EVCS = END VERTICAL CURVE STATION
EVCE = END VERTICAL CURVE ELEVATION
X = HORIZONTAL DISTANCE FROM BVC
Y = ELEVATION OF PARABOLA BELOW G_1
Rv = EQUIVALENT RADIUS OF VERTICAL CURVE

FORMULAS

$$a = \frac{G_2 - G_1}{2L}$$

$$Y = BVCE + G_1X + aX^2$$

$$AD = G_2 - G_1$$

$$r = \frac{100\ AD}{L}$$

$$Rv = \frac{L}{0.01\ AD}$$

VERTICAL CURVE GEOMETRY

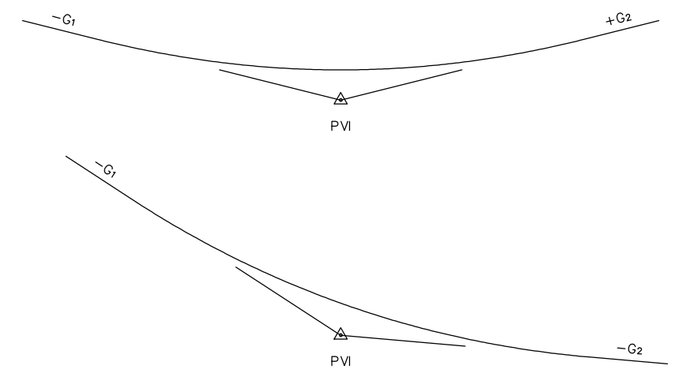

SAG TYPE VERTICAL CURVES

NO.	DATE	BY	CHECK	DESIGN	REVISION / SUBMITTAL
.	.	.	.	.	.
.	.	.	.	.	.
.	.	.	.	.	.
.	.	.	.	.	.
.	.	.	.	.	.
.	.	.	.	.	.
.	.	.	.	.	.
.	.	.	.	.	.
.	.	.	.	.	.

AECOM

PRELIMINARY ENGINEERING

METROPOLITAN COUNCIL

SOUTHWEST Green Line LRT Extension

WEST - VOLUME 1 (CIVIL) - SEGMENT 2
TRACK
DETAILS

DISCIPLINE: TRACK

SHEET NAME: W2-TRK-DTL-010

SHEET 56 OF 107

Aug, 27 2014 04:30 pm V:\3200_PEC-W\CAD\SEGMENT-W2\SHEET\TRACK\W2-TRK-DTL.dwg By: MaurisokB

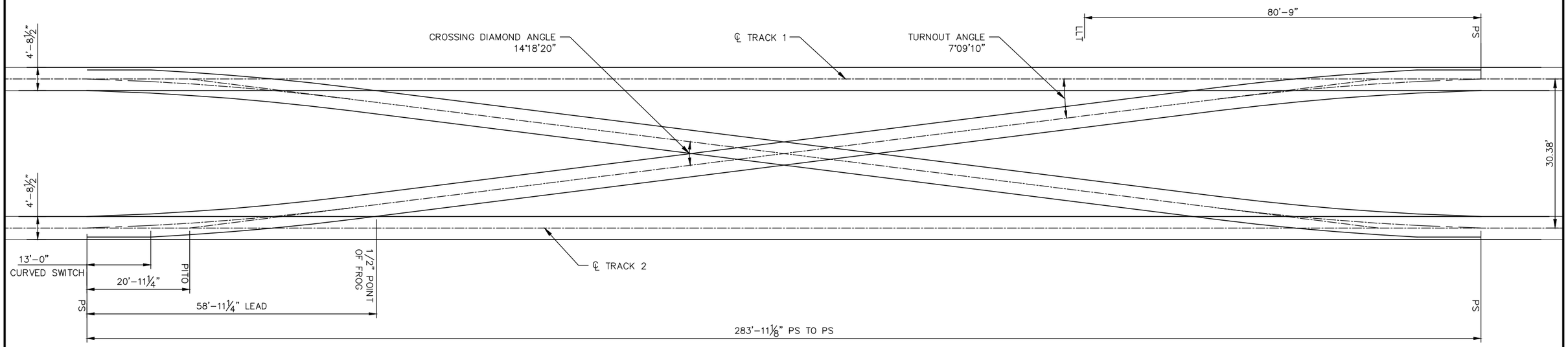

NO 8 DOUBLE CROSS OVER GEOMETRY DETAIL
(30.38' TRACK CENTERS)

NO.	DATE	BY	CHECK	DESIGN	REVISION / SUBMITTAL
.	.	.	.	.	.
.	.	.	.	.	.
.	.	.	.	.	.
.	.	.	.	.	.
.	.	.	.	.	.
.	.	.	.	.	.
.	.	.	.	.	.
.	.	.	.	.	.
.	.	.	.	.	.

AECOM

PRELIMINARY ENGINEERING

METROPOLITAN COUNCIL

SOUTHWEST Green Line LRT Extension

WEST - VOLUME 1 (CIVIL) - SEGMENT 2
TRACK
DETAILS

DISCIPLINE: TRACK

SHEET NAME: W2-TRK-DTL-011

SHEET 57 OF 107

Aug, 27 2014 04:30 pm V:\3200_PEC-W\CAD\SEGMENT-W2\SHEET\TRACK\W2-TRK-DTL.dwg By: MaurisakB

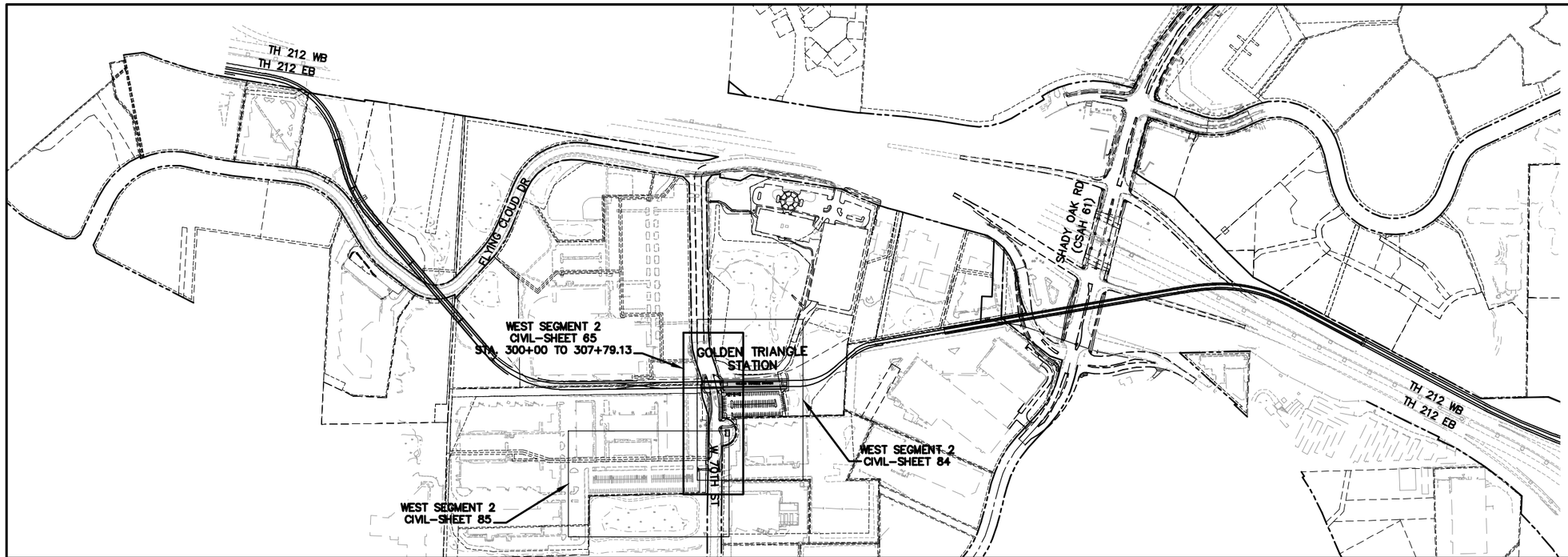

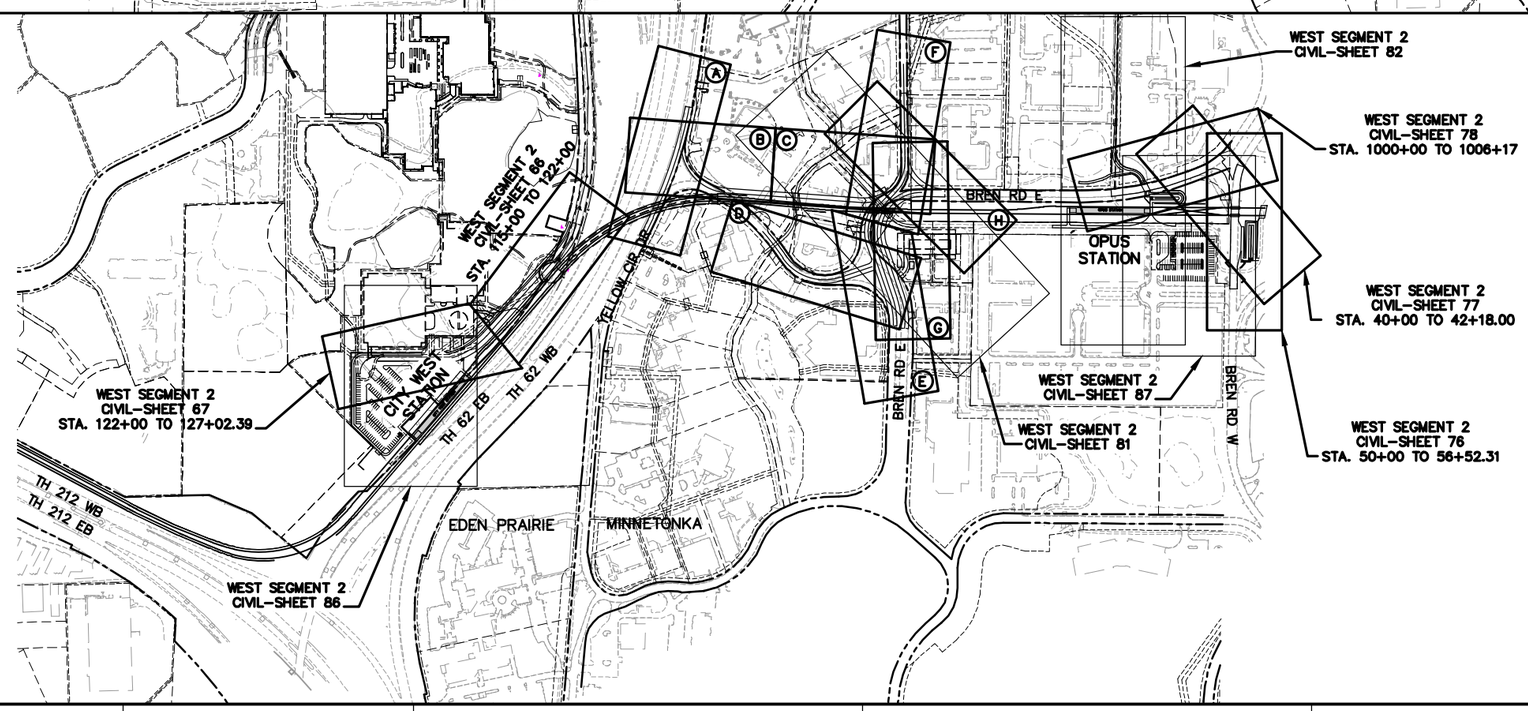

INDEX	
A	WEST-VOLUME 1 (CIVIL)-SEGMENT 2 CIVIL-SHEET 68 STA. 201+90.74 TO 207+57.08
B	WEST-VOLUME 1 (CIVIL)-SEGMENT 2 CIVIL-SHEET 69 STA. 202+93.92 TO 208+00
C	WEST-VOLUME 1 (CIVIL)-SEGMENT 2 CIVIL-SHEET 70 STA. 208+00 TO 213+00
D	WEST-VOLUME 1 (CIVIL)-SEGMENT 2 CIVIL-SHEET 71 STA. 280+00 TO 286+20.68
E	WEST-VOLUME 1 (CIVIL)-SEGMENT 2 CIVIL-SHEET 72 STA. 220+00 TO 226+00
F	WEST-VOLUME 1 (CIVIL)-SEGMENT 2 CIVIL-SHEET 73 STA. 226+00 TO 231+50
G	WEST-VOLUME 1 (CIVIL)-SEGMENT 2 CIVIL-SHEET 74 STA. 241+50 TO 249+50
H	WEST-VOLUME 1 (CIVIL)-SEGMENT 2 CIVIL-SHEET 75 STA. 270+00 TO 272+50

0 150 300 600
HORIZONTAL
SCALE IN FEET

NO.	DATE	BY	CHECK	DESIGN	REVISION / SUBMITTAL

AECOM SRF Consulting Group, Inc.

PRELIMINARY ENGINEERING

METROPOLITAN COUNCIL SOUTHWEST Green Line LRT Extension

WEST-VOLUME 1 (CIVIL)-SEGMENT 2
CIVIL
SHEET INDEX

DISCIPLINE: CIVIL

SHEET NAME: W2-CIV-IDX-001

SHEET 58 OF 107

Jun, 27 2014 09:16 am V:\3200_PEC-W\CAD\SEGMENT-W2\SHEET\CIVIL\W2-CIV-IDX.dwg By: Boscha

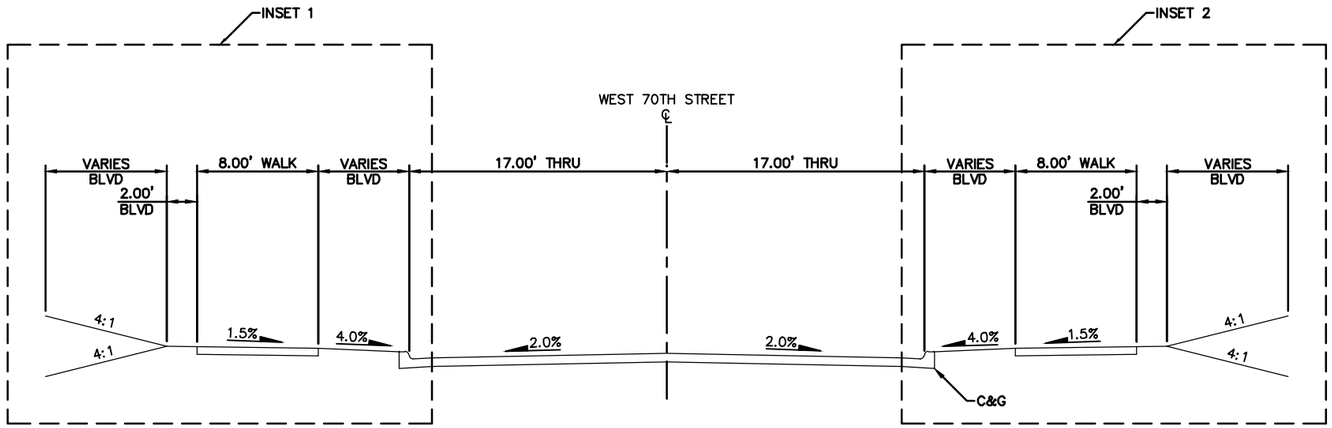

WEST 70TH STREET
STA. 300+87+.07 TO STA. 306+82.89

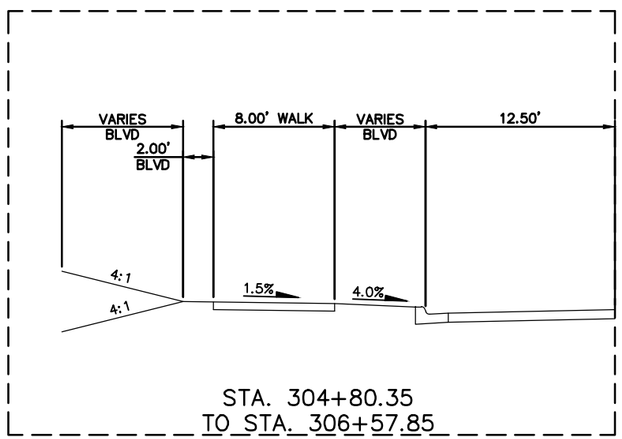

STA. 304+80.35
TO STA. 306+57.85
INSET 1

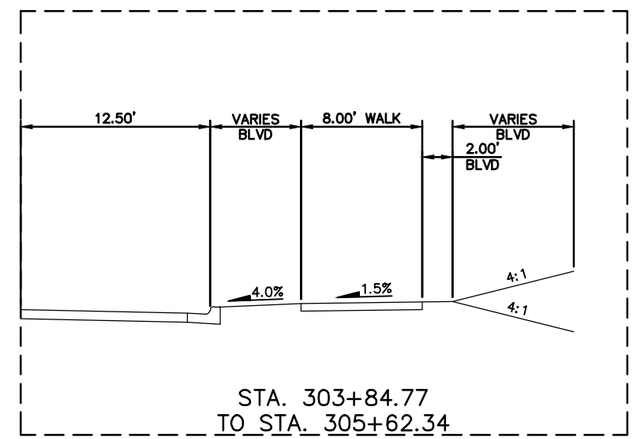

STA. 303+84.77
TO STA. 305+62.34
INSET 2

0 2.5 5 10
HORIZONTAL
SCALE IN FEET

NO.	DATE	BY	CHECK	DESIGN	REVISION / SUBMITTAL

AECOM SRF Consulting Group, Inc.

PRELIMINARY ENGINEERING

METROPOLITAN COUNCIL
SOUTHWEST Green Line LRT Extension

WEST-VOLUME 1 (CIVIL)-SEGMENT 2
CIVIL
TYPICAL SECTIONS
W 70TH ST

DISCIPLINE: CIVIL
SHEET NAME: W2-CIV-TYP-001

SHEET 59 OF 107

Jun, 27 2014 09:16 am V:\3200_PEC-W\CAD\SEGMENT-W2\SHEET\CIVIL\W2-CIV-TYP-001.dwg By: Boscha

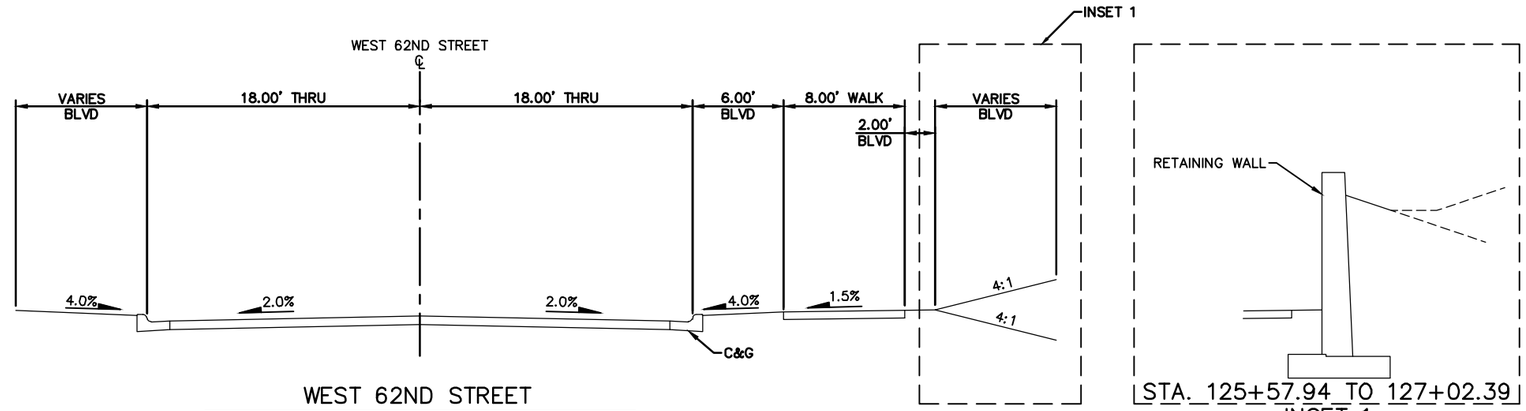

WEST 62ND STREET
STA. 116+69.07 TO STA. 127+02.39

STA. 125+57.94 TO 127+02.39
INSET 1

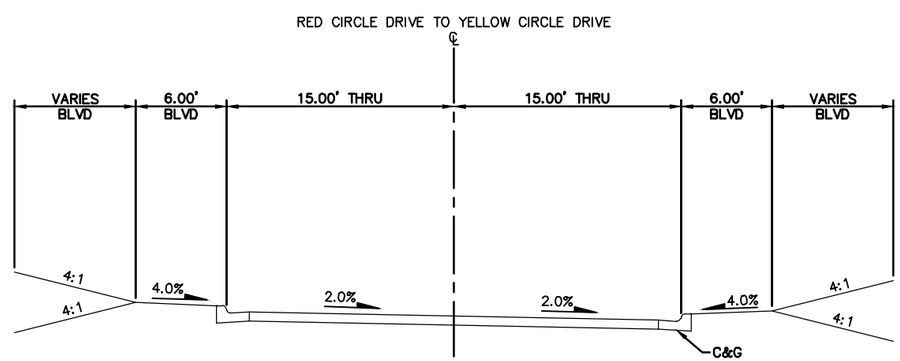

RED CIRCLE DRIVE TO YELLOW CIRCLE DRIVE
STA. 201+90.74 TO STA. 207+57.08

0 2.5 5 10
HORIZONTAL
SCALE IN FEET

NO.	DATE	BY	CHECK	DESIGN	REVISION / SUBMITTAL

AECOM SRF Consulting Group, Inc.

PRELIMINARY ENGINEERING

METROPOLITAN COUNCIL
SOUTHWEST Green Line LRT Extension

WEST-VOLUME 1 (CIVIL)-SEGMENT 2
CIVIL
TYPICAL SECTIONS
W 62ND ST & RED TO YELLOW CIR DR

DISCIPLINE: CIVIL
SHEET NAME: W2-CIV-TYP-002

SHEET 60 OF 107

Jun, 27 2014 09:17 am V:\3200_PEC-W\CAD\SEGMENT-W2\SHEET\CIVIL\W2-CIV-TYP-001.dwg By: Boscha

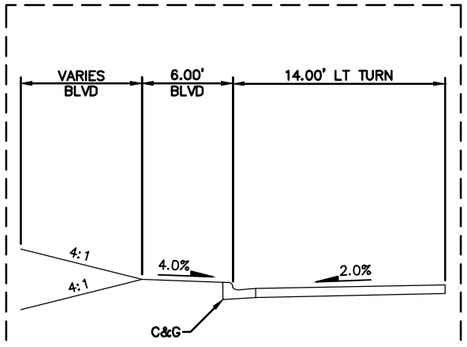

STA. 204+77.00
TO STA. 206+35.00
INSET 3

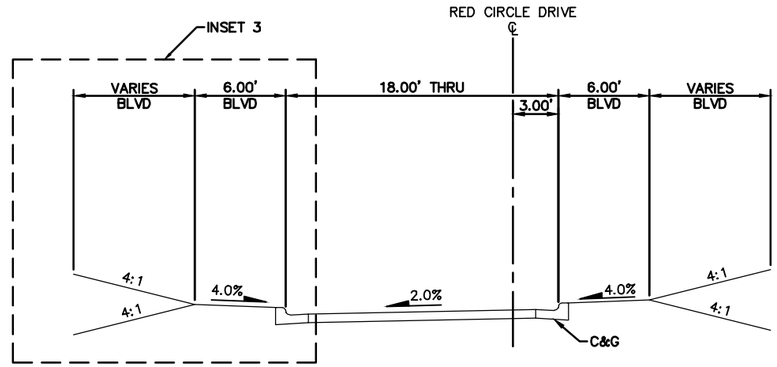

RED CIRCLE DRIVE
STA. 203+63.80 TO STA. 212+33.92

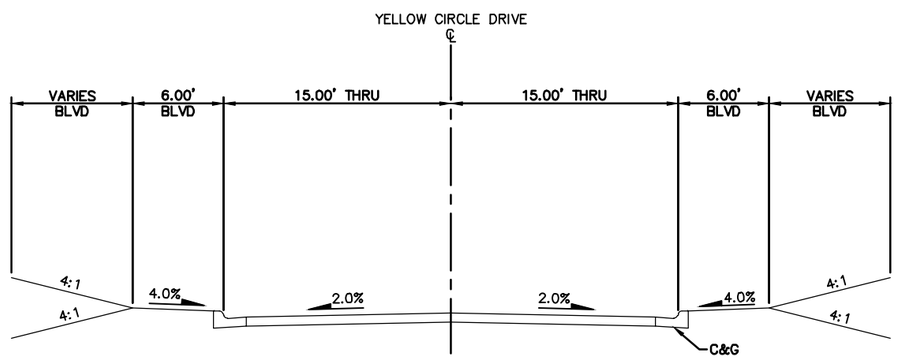

YELLOW CIRCLE DRIVE
STA. 280+00.00 TO STA. 286+20.68

0 2.5 5 10
HORIZONTAL
SCALE IN FEET

NO.	DATE	BY	CHECK	DESIGN	REVISION / SUBMITTAL

AECOM SRF Consulting Group, Inc.

PRELIMINARY ENGINEERING

METROPOLITAN COUNCIL
SOUTHWEST Green Line LRT Extension

WEST-VOLUME 1 (CIVIL)-SEGMENT 2
CIVIL
TYPICAL SECTIONS
RED CIRCLE DRIVE & YELLOW CIRCLE DRIVE

DISCIPLINE: CIVIL
SHEET NAME: W2-CIV-TYP-003

SHEET 61 OF 107

Jun, 27 2014 09:17 am V:\3200_PEC-W\CAD\SEGMENT-W2\SHEET\CIVIL\W2-CIV-TYP-001.dwg By: Boscha

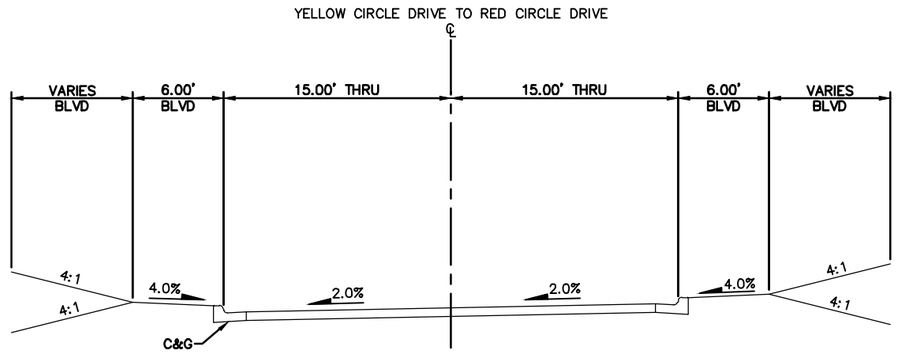

YELLOW CIRCLE DRIVE TO RED CIRCLE DRIVE
STA. 221+70.56 TO STA. 231+50.00

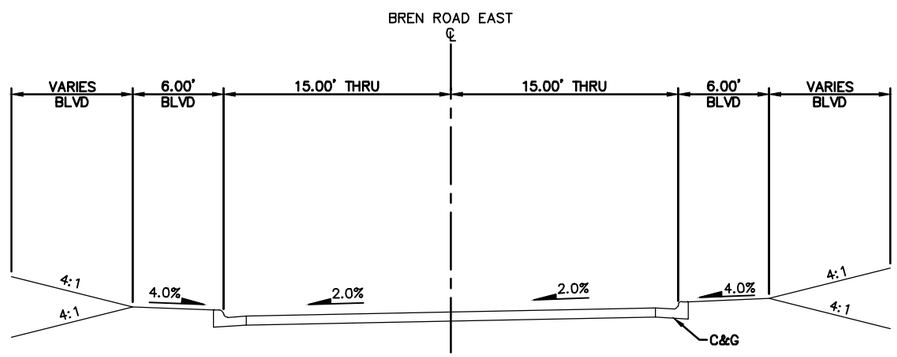

BREN ROAD EAST
STA. 241+60.36 TO STA. 248+92.94

0 2.5 5 10
HORIZONTAL
SCALE IN FEET

NO.	DATE	BY	CHECK	DESIGN	REVISION / SUBMITTAL

AECOM SRF Consulting Group, Inc.

PRELIMINARY ENGINEERING

METROPOLITAN COUNCIL
SOUTHWEST Green Line LRT Extension

WEST-VOLUME 1 (CIVIL)-SEGMENT 2
CIVIL
TYPICAL SECTIONS
YELLOW TO RED CIR DR & BREN RD E

DISCIPLINE: CIVIL
SHEET NAME: W2-CIV-TYP-004

SHEET 62 OF 107

Jun, 27 2014 09:17 am V:\3200_PEC-W\CAD\SEGMENT-W2\SHEET\CIVIL\W2-CIV-TYP-001.dwg By: Boscha

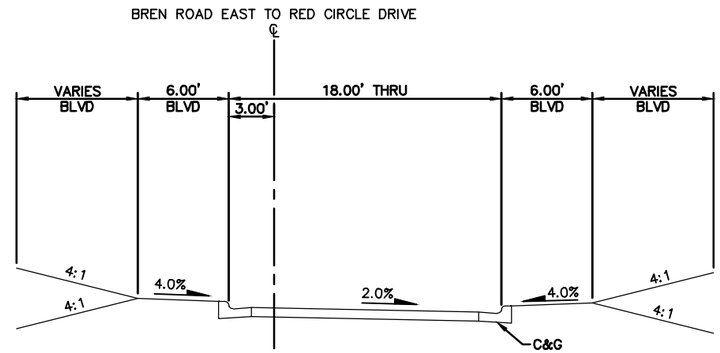

BREN ROAD EAST TO RED CIRCLE DRIVE
STA. 270+67.43 TO STA. 271+86.76

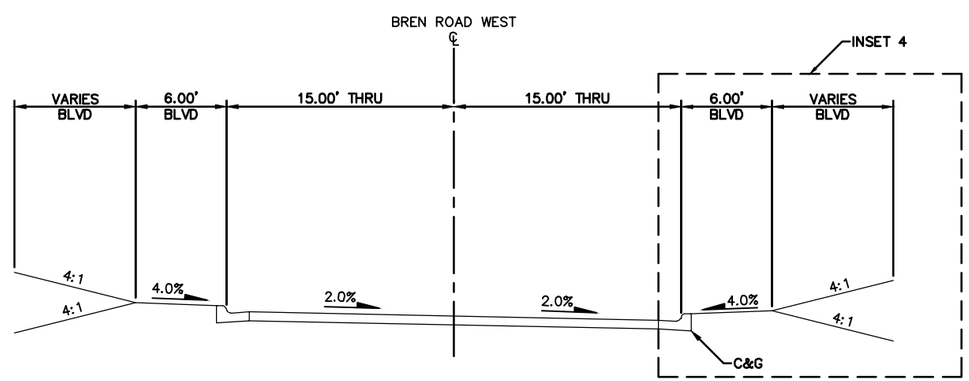

BREN ROAD WEST
STA. 50+80.00 TO STA. 55+68.77

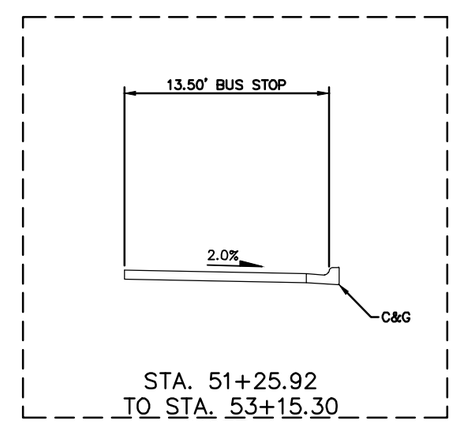

STA. 51+25.92
TO STA. 53+15.30
INSET 4

0 2.5 5 10
HORIZONTAL
SCALE IN FEET

NO.	DATE	BY	CHECK	DESIGN	REVISION / SUBMITTAL

AECOM SRF Consulting Group, Inc.

PRELIMINARY ENGINEERING

METROPOLITAN COUNCIL SOUTHWEST Green Line LRT Extension

WEST-VOLUME 1 (CIVIL)-SEGMENT 2
CIVIL
TYPICAL SECTIONS
BREN RD E TO RED CIR DR & BREN RD W

DISCIPLINE: CIVIL
SHEET NAME: W2-CIV-TYP-005

SHEET 63 OF 107

Jun, 27 2014 09:17 am V:\3200_PEC-W\CAD\SEGMENT-W2\SHEET\CIVIL\W2-CIV-TYP-001.dwg By: Boscha

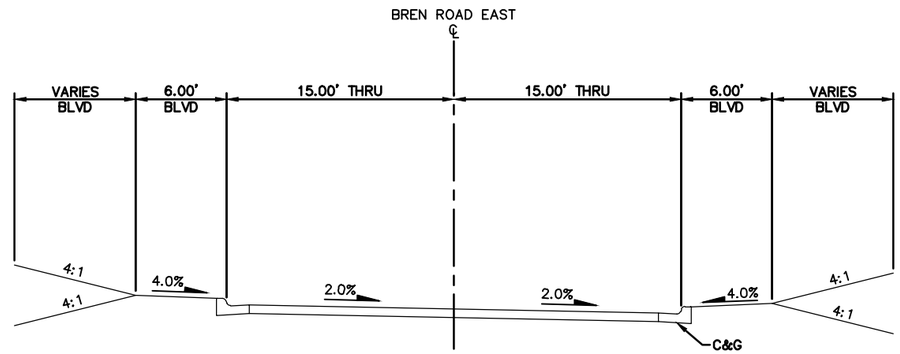

BREN ROAD EAST
STA. 1000+00.00 TO STA. 1006+17

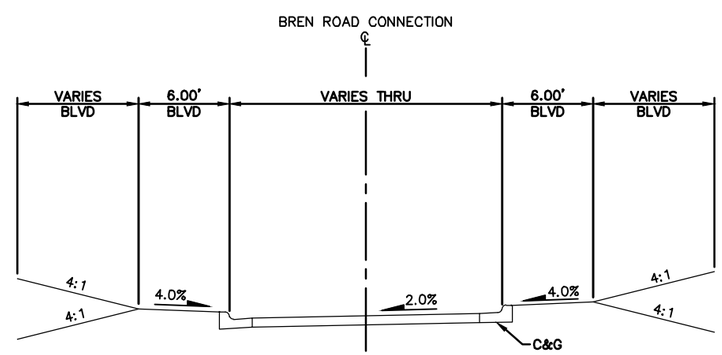

BREN ROAD CONNECTION
STA. 40+79.09 TO STA. 42+18.00

0 2.5 5 10
HORIZONTAL SCALE IN FEET

NO.	DATE	BY	CHECK	DESIGN	REVISION / SUBMITTAL

AECOM SRF Consulting Group, Inc.

PRELIMINARY ENGINEERING

METROPOLITAN COUNCIL SOUTHWEST Green Line LRT Extension

WEST-VOLUME 1 (CIVIL)-SEGMENT 2
CIVIL
TYPICAL SECTIONS
BREN RD EAST & BREN RD CONNECTION

DISCIPLINE: CIVIL

SHEET NAME: W2-CIV-TYP-006

SHEET 64 OF 107

Jun, 27 2014 09:17 am V:\3200_PEC-W\CAD\SEGMENT-W2\SHEET\CIVIL\W2-CIV-TYP-001.dwg By: Boscha

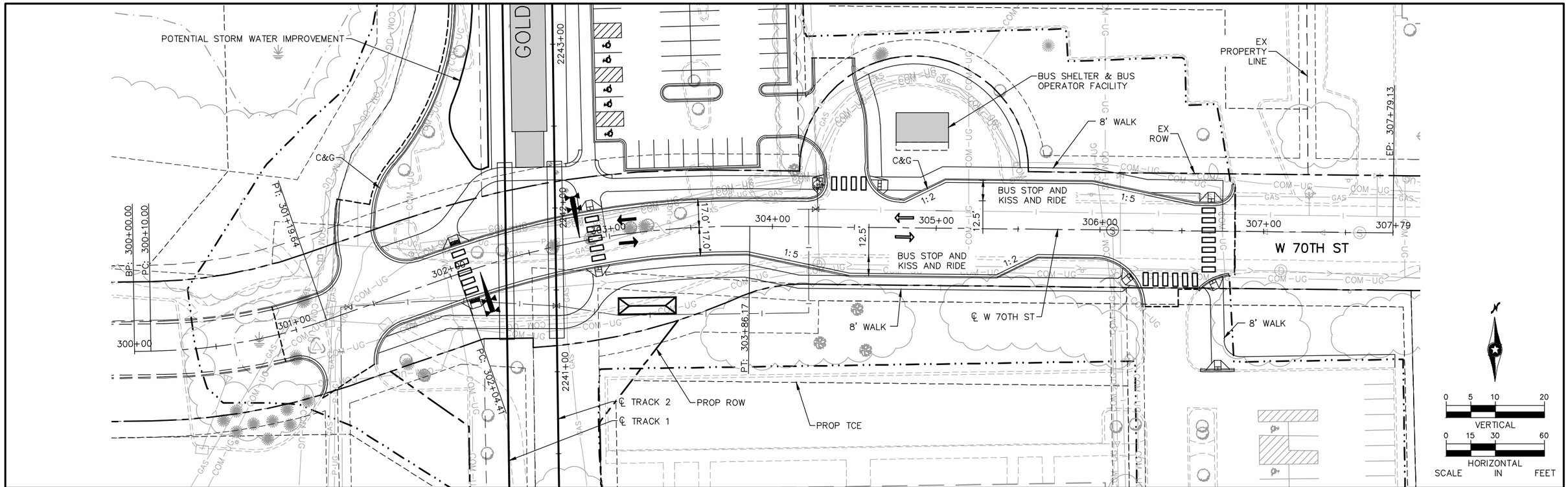

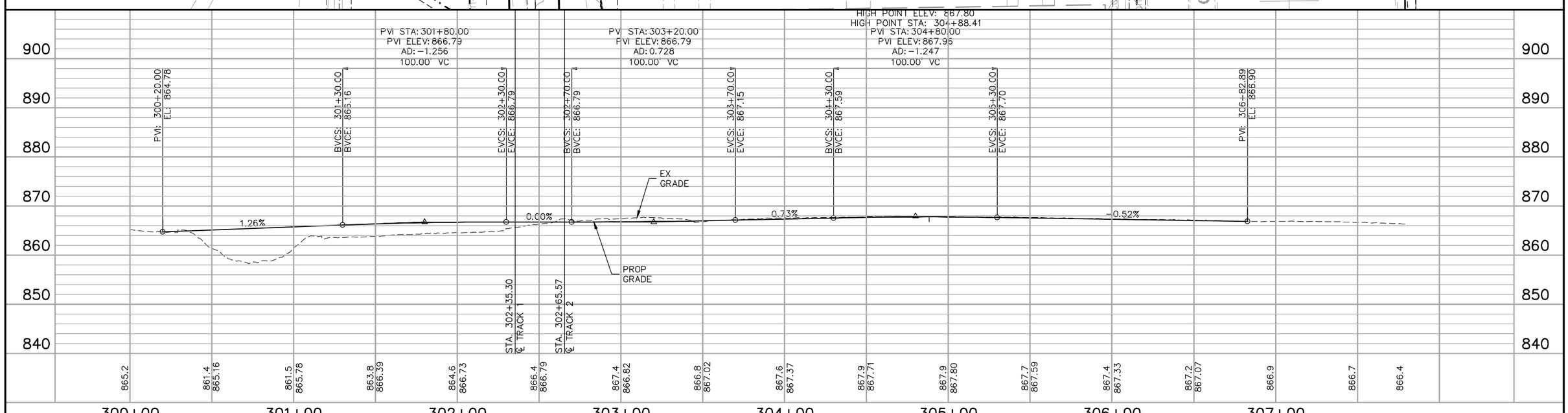

NO.	DATE	BY	CHECK	DESIGN	REVISION / SUBMITTAL
.	.	.	.	.	.
.	.	.	.	.	.
.	.	.	.	.	.
.	.	.	.	.	.
.	.	.	.	.	.
.	.	.	.	.	.
.	.	.	.	.	.
.	.	.	.	.	.
.	.	.	.	.	.
.	.	.	.	.	.

AECOM SRF Consulting Group, Inc.

PRELIMINARY ENGINEERING

METROPOLITAN COUNCIL SOUTHWEST Green Line LRT Extension

WEST-VOLUME 1 (CIVIL)-SEGMENT 2
W 70TH ST
PLAN AND PROFILE
STA. 300+00 TO STA. 307+79.13

DISCIPLINE: CIVIL

SHEET NAME: W2-CIV-PPFL-001

SHEET 65 OF 107

Jul. 01 2014 01:42 pm V:\3200_PEC-W\CAD\SEGMENT-W2\SHEET\CIVIL\W2-CIV-PLN-001.dwg By: yangdk

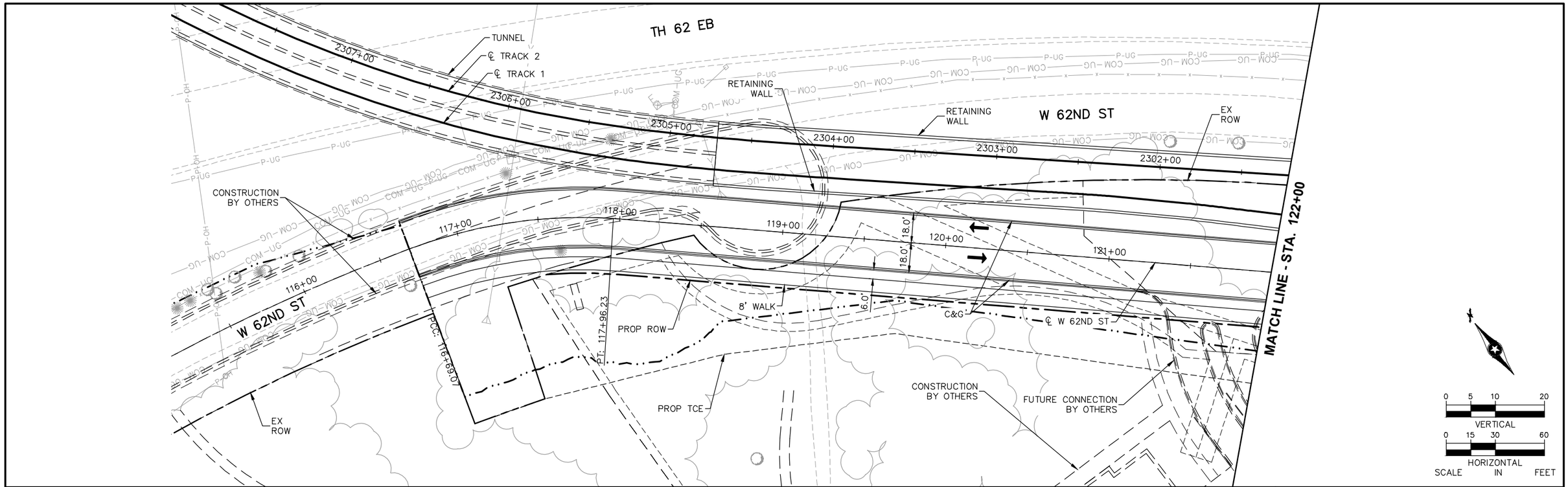

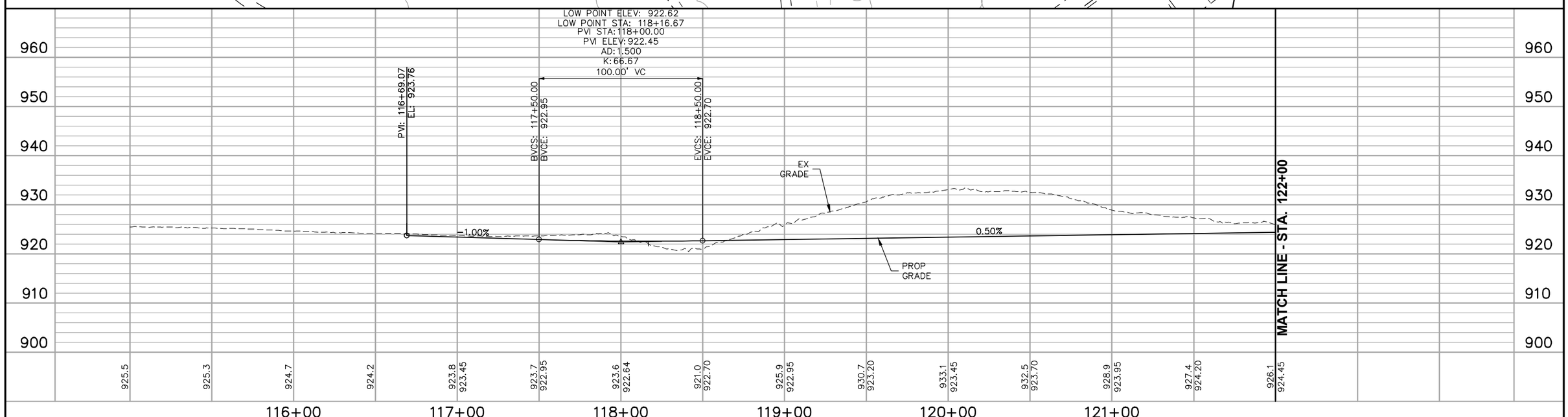

NO.	DATE	BY	CHECK	DESIGN	REVISION / SUBMITTAL
.	.	.	.	.	.
.	.	.	.	.	.
.	.	.	.	.	.
.	.	.	.	.	.
.	.	.	.	.	.
.	.	.	.	.	.
.	.	.	.	.	.
.	.	.	.	.	.
.	.	.	.	.	.
.	.	.	.	.	.

AECOM SRF Consulting Group, Inc.

PRELIMINARY ENGINEERING

METROPOLITAN COUNCIL SOUTHWEST Green Line LRT Extension

WEST-VOLUME 1 (CIVIL)-SEGMENT 2
W 62ND STREET
PLAN AND PROFILE
STA. 115+00 TO STA. 122+00

DISCIPLINE: CIVIL

SHEET NAME: W2-CIV-PPFL-002

SHEET 66 OF 107

Jul, 01 2014 01:42 pm V:\3200_PEC-W\CAD\SEGMENT-W2\SHEET\CIVIL\W2-CIV-PLN-001.dwg By: yangdk

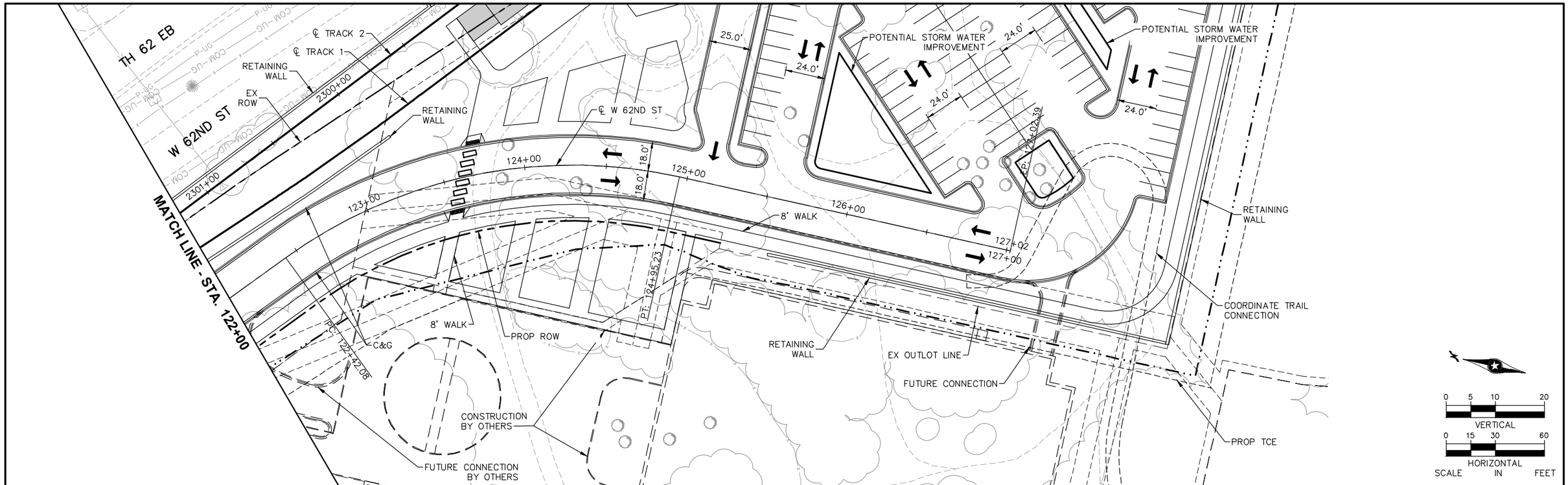

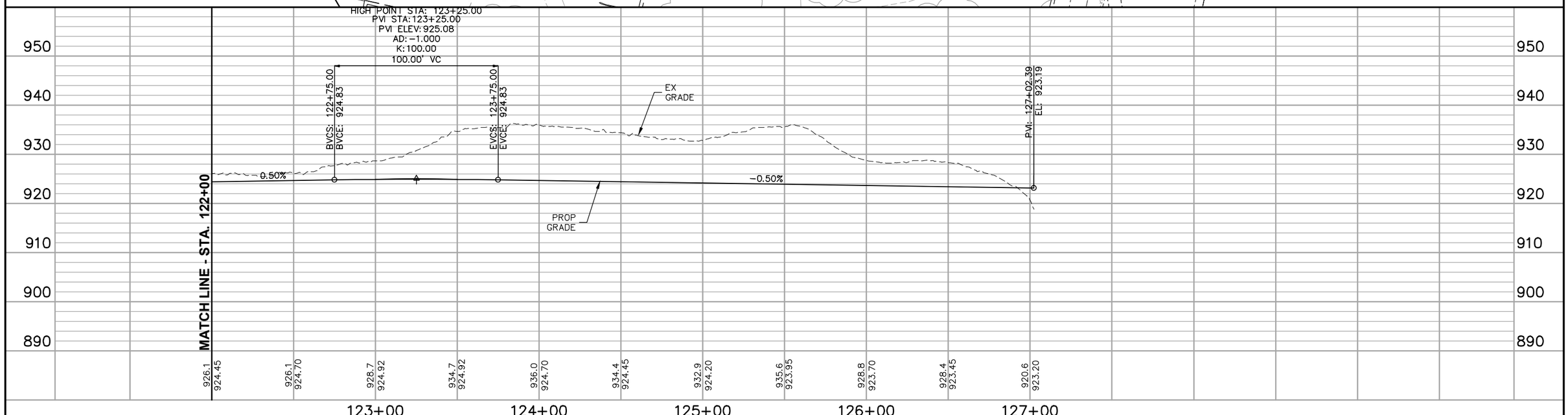

NO.	DATE	BY	CHECK	DESIGN	REVISION / SUBMITTAL
.	.	.	.	.	.
.	.	.	.	.	.
.	.	.	.	.	.
.	.	.	.	.	.
.	.	.	.	.	.
.	.	.	.	.	.
.	.	.	.	.	.
.	.	.	.	.	.
.	.	.	.	.	.
.	.	.	.	.	.

AECOM SRF Consulting Group, Inc.

PRELIMINARY ENGINEERING

METROPOLITAN COUNCIL SOUTHWEST Green Line LRT Extension

WEST-VOLUME 1 (CIVIL)-SEGMENT 2
W 62ND STREET
PLAN AND PROFILE
STA. 122+00 TO STA. 127+02.39

DISCIPLINE: CIVIL

SHEET NAME: W2-CIV-PPFL-003

SHEET 67 OF 107

Jul, 01 2014 01:43 pm V:\3200_PEC-W\CAD\SEGMENT-W2\SHEET\CIVIL\W2-CIV-PLN-001.dwg By: yangdk

NOTES:
1. DESIGN SHOWN ASSUMES THE RED CIRCLE DRIVE TRAFFIC FLOW REVERSAL TO BE IMPLEMENTED BY OTHERS. PRIOR TO OR CONCURRENT WITH SWLRT CONSTRUCTION.

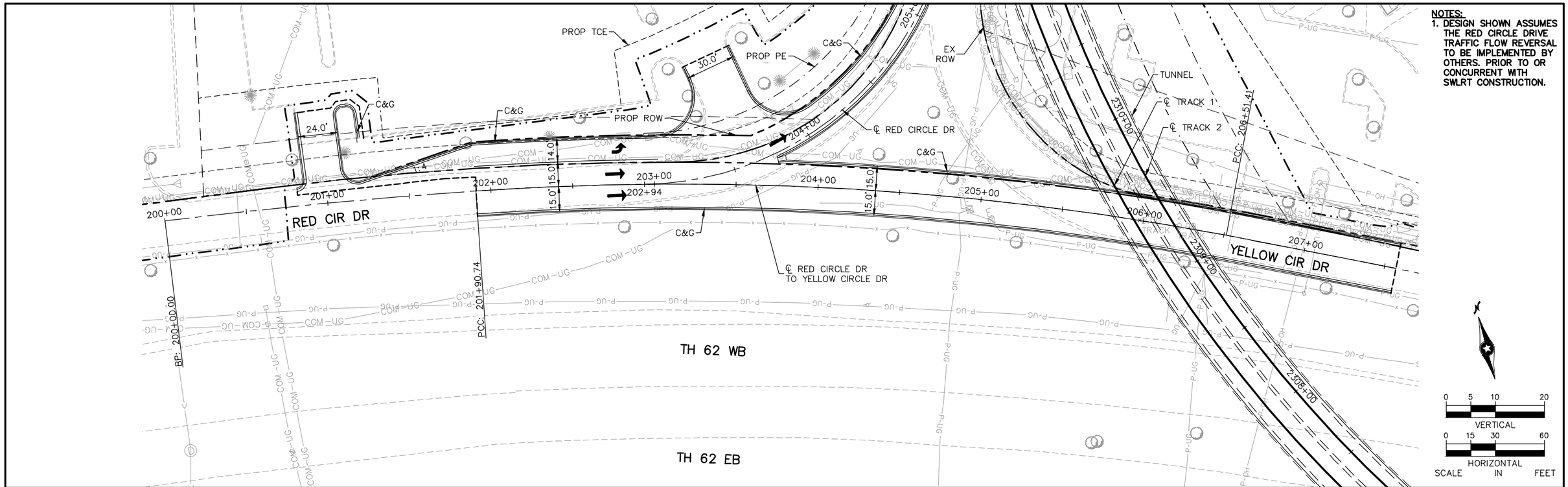

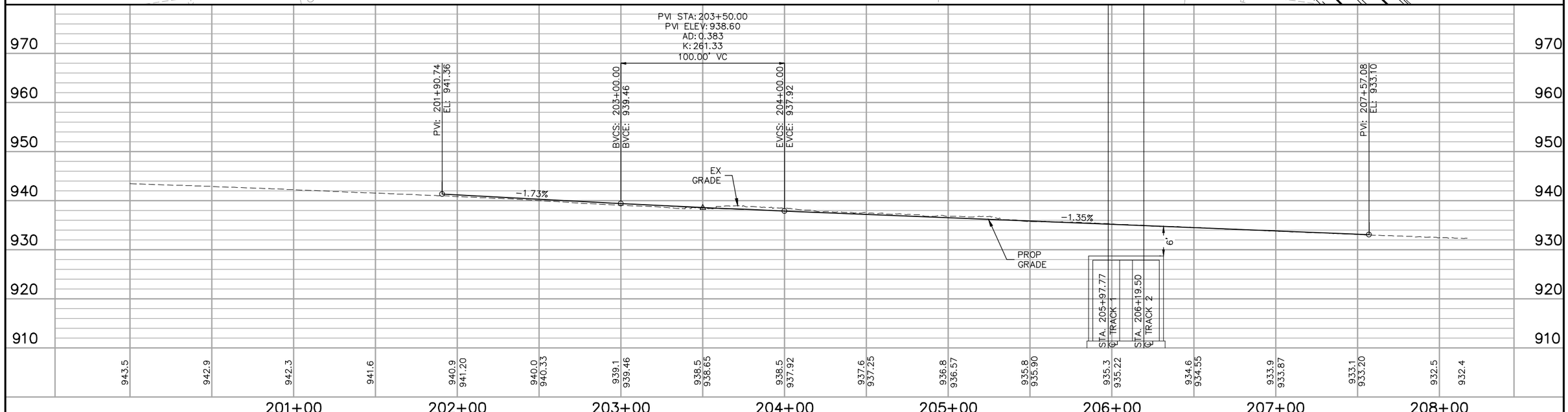

NO.	DATE	BY	CHECK	DESIGN	REVISION / SUBMITTAL
.	.	.	.	.	.
.	.	.	.	.	.
.	.	.	.	.	.
.	.	.	.	.	.
.	.	.	.	.	.
.	.	.	.	.	.
.	.	.	.	.	.
.	.	.	.	.	.
.	.	.	.	.	.
.	.	.	.	.	.

AECOM SRF Consulting Group, Inc.

PRELIMINARY ENGINEERING

METROPOLITAN COUNCIL SOUTHWEST Green Line LRT Extension

WEST-VOLUME 1 (CIVIL)-SEGMENT 2
RED CIRCLE DR TO YELLOW CIRCLE DR
PLAN AND PROFILE
STA. 201+90.74 TO STA. 207+57.08

DISCIPLINE: CIVIL

SHEET NAME: W2-CIV-PPFL-004

SHEET 68 OF 107

Jul. 01 2014 01:44 pm V:\3200_PEC-W\CAD\SEGMENT-W2\SHEET\CIVIL\W2-CIV-PLN-001.dwg By: yangdk

NOTES:
1. DESIGN SHOWN ASSUMES THE RED CIRCLE DRIVE TRAFFIC FLOW REVERSAL TO BE IMPLEMENTED BY OTHERS. PRIOR TO OR CONCURRENT WITH SWLRT CONSTRUCTION.

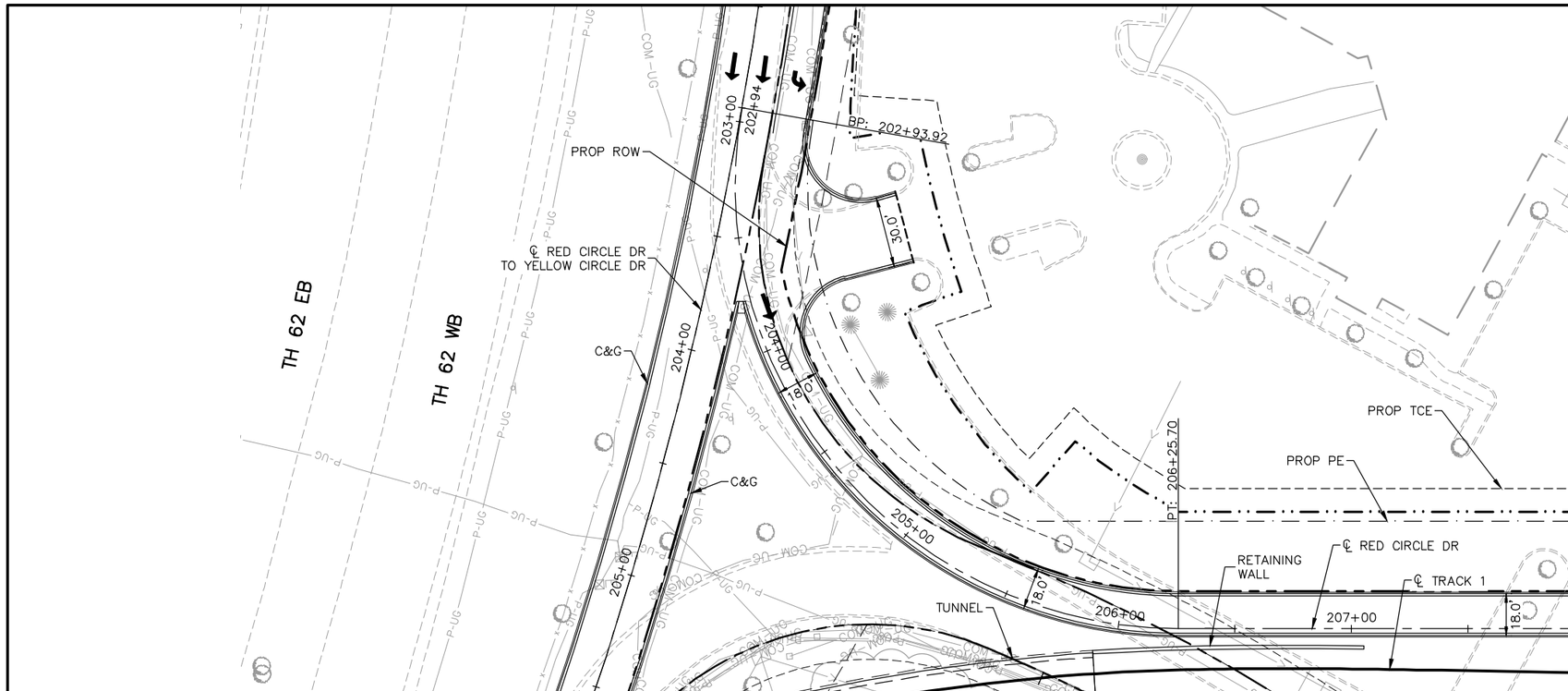

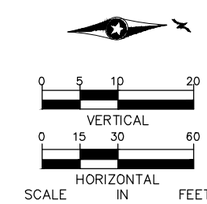

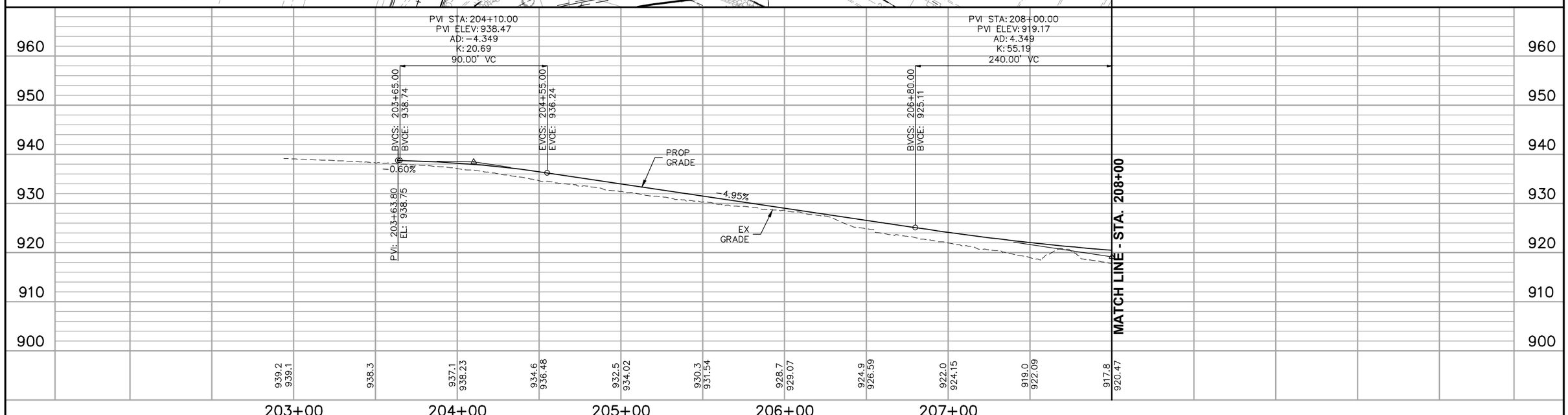

NO.	DATE	BY	CHECK	DESIGN	REVISION / SUBMITTAL
.	.	.	.	.	.
.	.	.	.	.	.
.	.	.	.	.	.
.	.	.	.	.	.
.	.	.	.	.	.
.	.	.	.	.	.
.	.	.	.	.	.
.	.	.	.	.	.
.	.	.	.	.	.
.	.	.	.	.	.

AECOM SRF Consulting Group, Inc.

PRELIMINARY ENGINEERING

METROPOLITAN COUNCIL SOUTHWEST Green Line LRT Extension

WEST-VOLUME 1 (CIVIL)-SEGMENT 2
RED CIRCLE DR
PLAN AND PROFILE
STA. 202+93.92 TO STA. 208+00

DISCIPLINE: CIVIL

SHEET NAME: W2-CIV-PPFL-005

NOTES:
1. DESIGN SHOWN ASSUMES THE RED CIRCLE DRIVE TRAFFIC FLOW REVERSAL TO BE IMPLEMENTED BY OTHERS. PRIOR TO OR CONCURRENT WITH SWLRT CONSTRUCTION.

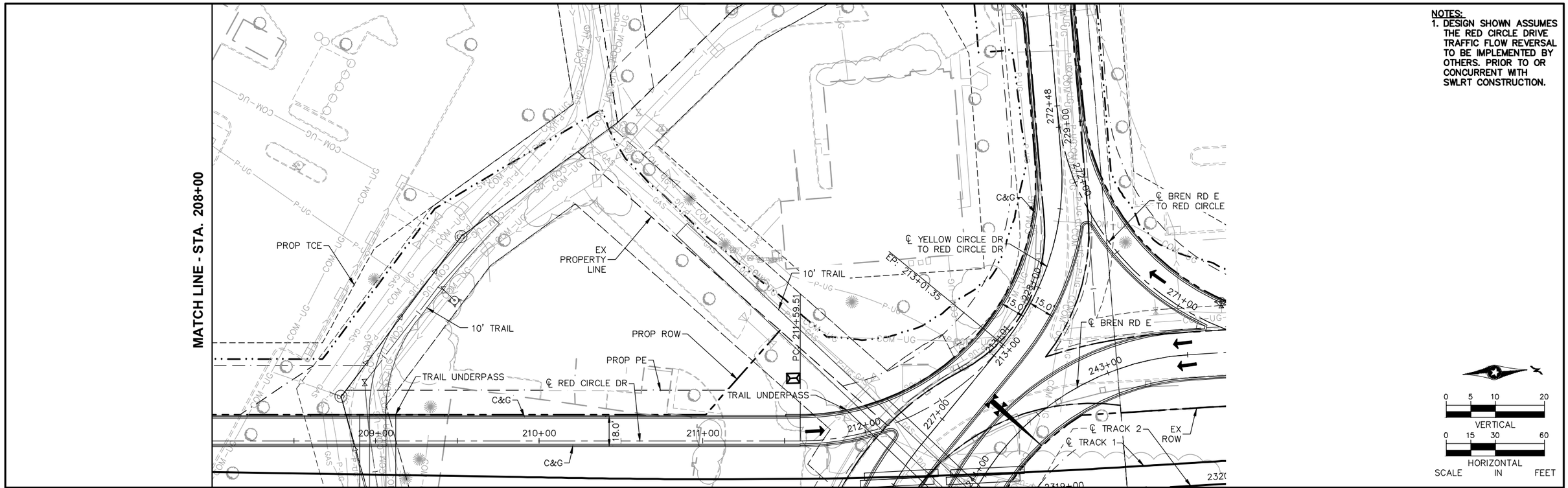

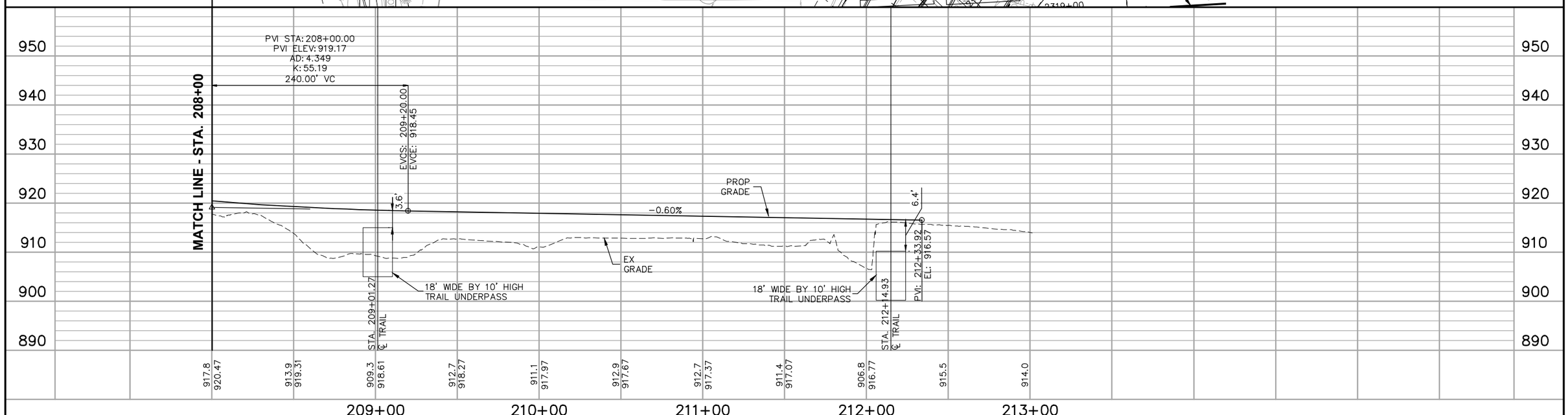

NO.	DATE	BY	CHECK	DESIGN	REVISION / SUBMITTAL
.	.	.	.	.	.
.	.	.	.	.	.
.	.	.	.	.	.
.	.	.	.	.	.
.	.	.	.	.	.
.	.	.	.	.	.
.	.	.	.	.	.
.	.	.	.	.	.
.	.	.	.	.	.

AECOM SRF Consulting Group, Inc.

PRELIMINARY ENGINEERING

METROPOLITAN COUNCIL SOUTHWEST Green Line LRT Extension

WEST-VOLUME 1 (CIVIL)-SEGMENT 2
RED CIRCLE DR
PLAN AND PROFILE
STA. 208+00 TO STA. 213+00

DISCIPLINE: CIVIL

SHEET NAME: W2-CIV-PPFL-006

NOTES:
1. DESIGN SHOWN ASSUMES THE RED CIRCLE DRIVE TRAFFIC FLOW REVERSAL TO BE IMPLEMENTED BY OTHERS. PRIOR TO OR CONCURRENT WITH SWLRT CONSTRUCTION.

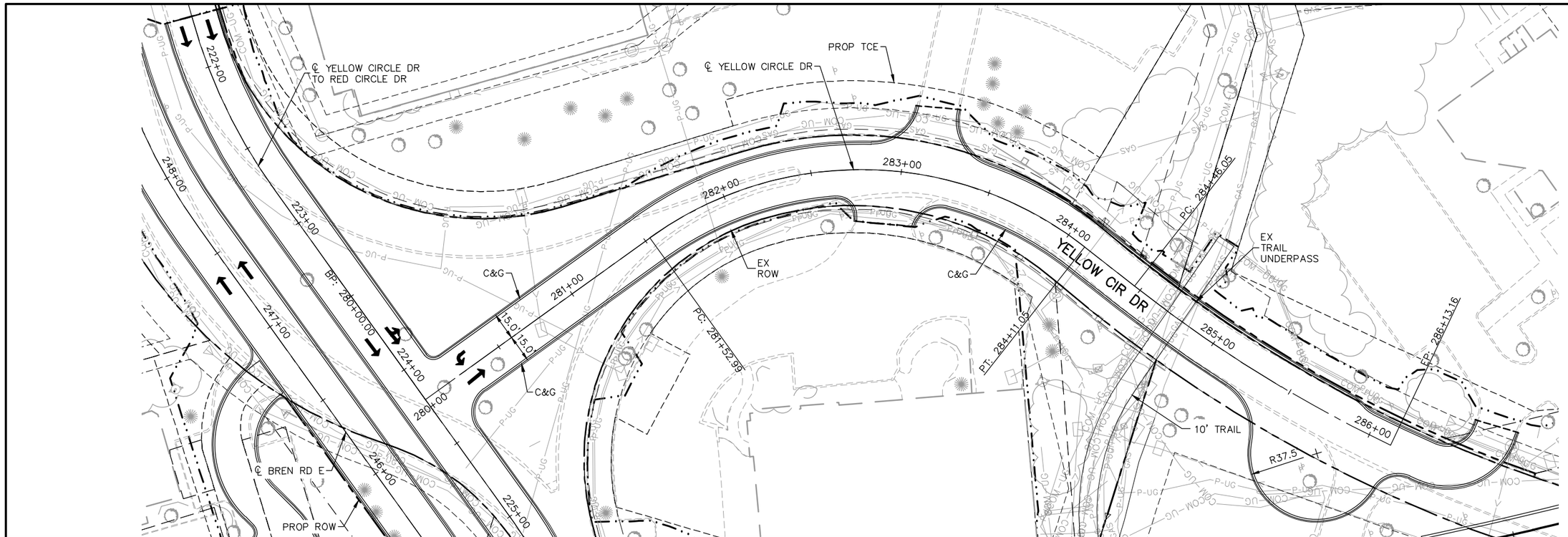

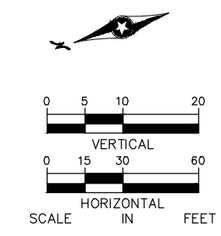

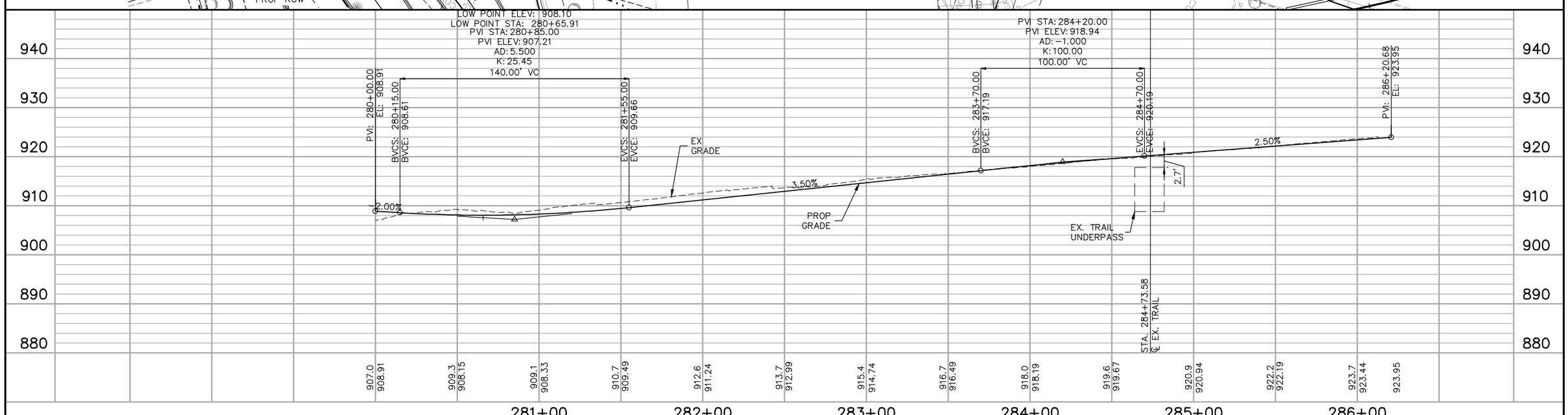

NO.	DATE	BY	CHECK	DESIGN	REVISION / SUBMITTAL
.	.	.	.	.	.
.	.	.	.	.	.
.	.	.	.	.	.
.	.	.	.	.	.
.	.	.	.	.	.
.	.	.	.	.	.
.	.	.	.	.	.
.	.	.	.	.	.
.	.	.	.	.	.
.	.	.	.	.	.

AECOM SRF Consulting Group, Inc.

PRELIMINARY ENGINEERING

METROPOLITAN COUNCIL SOUTHWEST Green Line LRT Extension

WEST-VOLUME 1 (CIVIL)-SEGMENT 2
YELLOW CIRCLE DR
PLAN AND PROFILE
STA. 280+00 TO STA. 286+20.68

DISCIPLINE: CIVIL
SHEET NAME: W2-CIV-PPFL-007

NOTES:
1. DESIGN SHOWN ASSUMES THE RED CIRCLE DRIVE TRAFFIC FLOW REVERSAL TO BE IMPLEMENTED BY OTHERS. PRIOR TO OR CONCURRENT WITH SWLRT CONSTRUCTION.

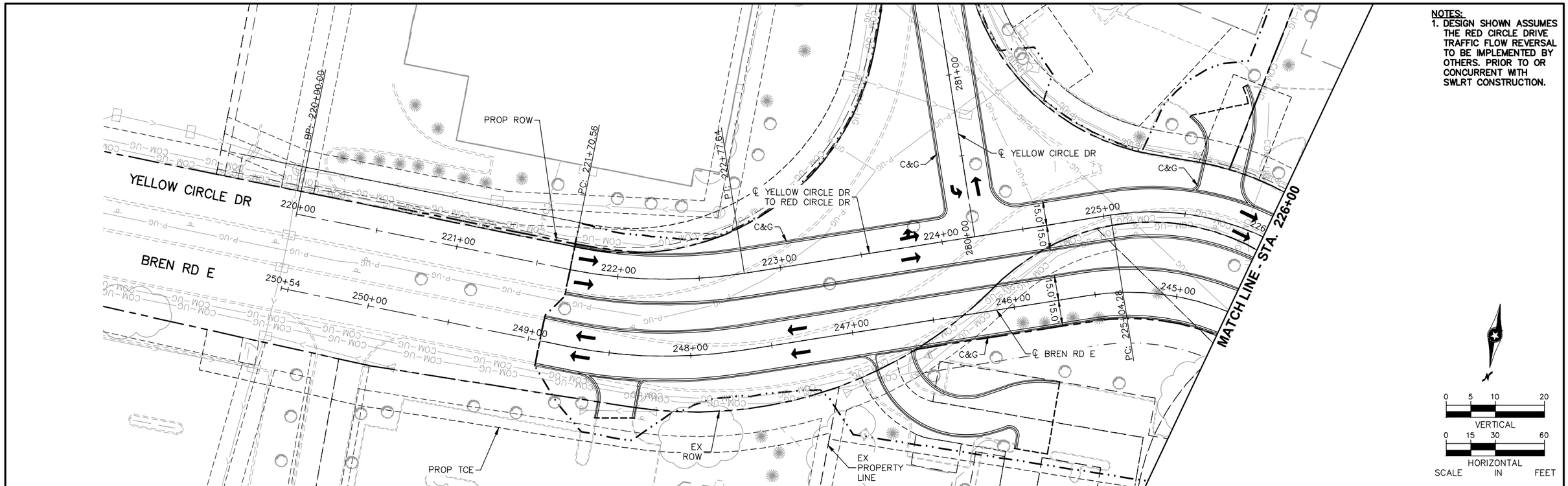

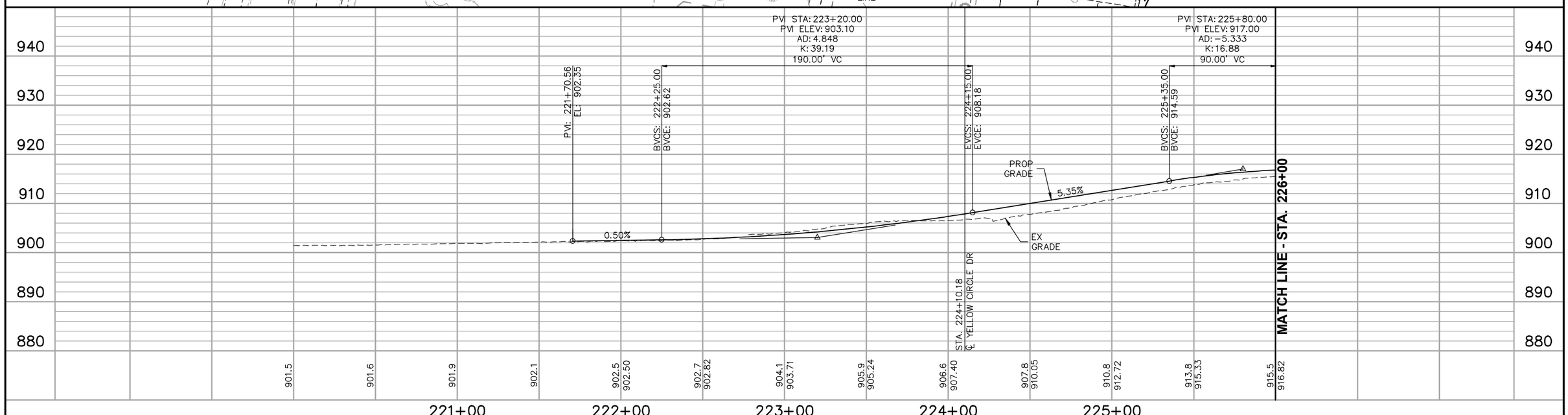

NO.	DATE	BY	CHECK	DESIGN	REVISION / SUBMITTAL
.	.	.	.	.	.
.	.	.	.	.	.
.	.	.	.	.	.
.	.	.	.	.	.
.	.	.	.	.	.
.	.	.	.	.	.
.	.	.	.	.	.
.	.	.	.	.	.
.	.	.	.	.	.
.	.	.	.	.	.

AECOM SRF Consulting Group, Inc.

PRELIMINARY ENGINEERING

METROPOLITAN COUNCIL SOUTHWEST Green Line LRT Extension

WEST-VOLUME 1 (CIVIL)-SEGMENT 2
YELLOW CIRCLE DR TO RED CIRCLE DR
PLAN AND PROFILE
STA. 220+00 TO STA. 226+00

DISCIPLINE: CIVIL
SHEET NAME: W2-CIV-PPFL-008

NOTES:
1. DESIGN SHOWN ASSUMES THE RED CIRCLE DRIVE TRAFFIC FLOW REVERSAL TO BE IMPLEMENTED BY OTHERS. PRIOR TO OR CONCURRENT WITH SWLRT CONSTRUCTION.

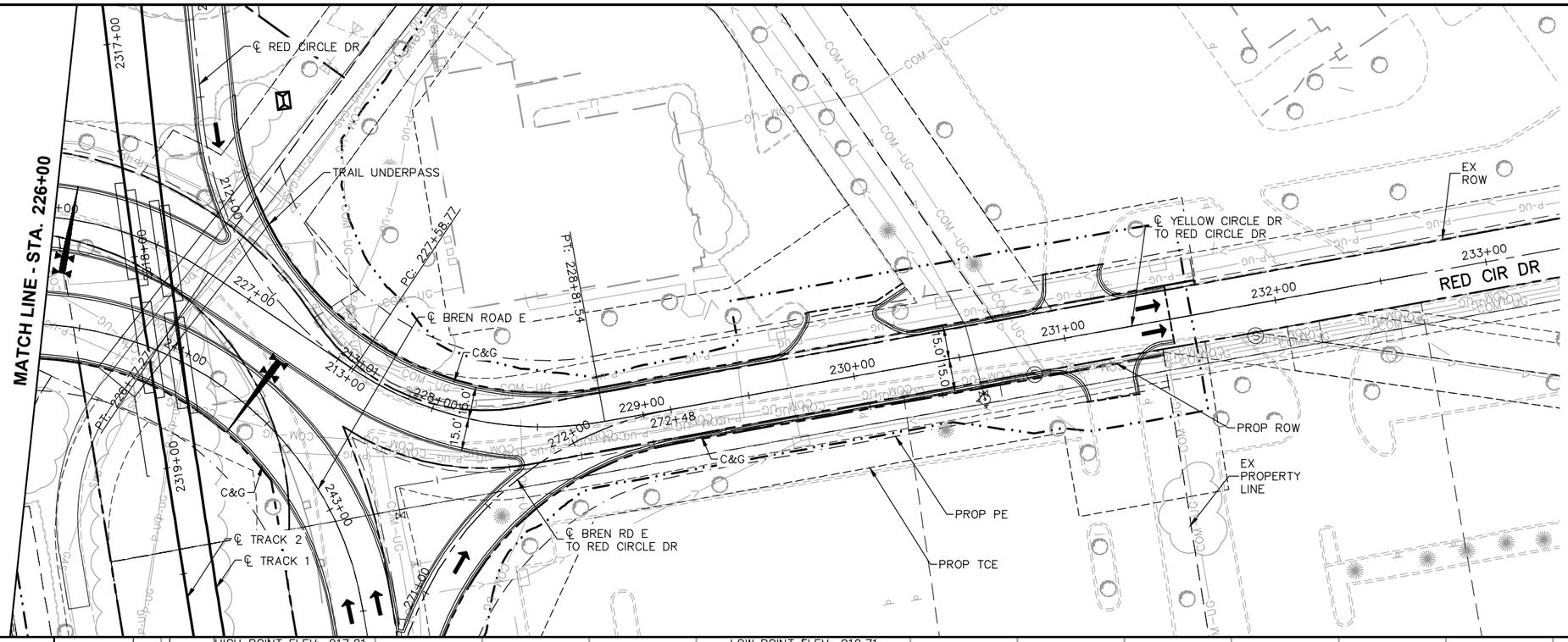

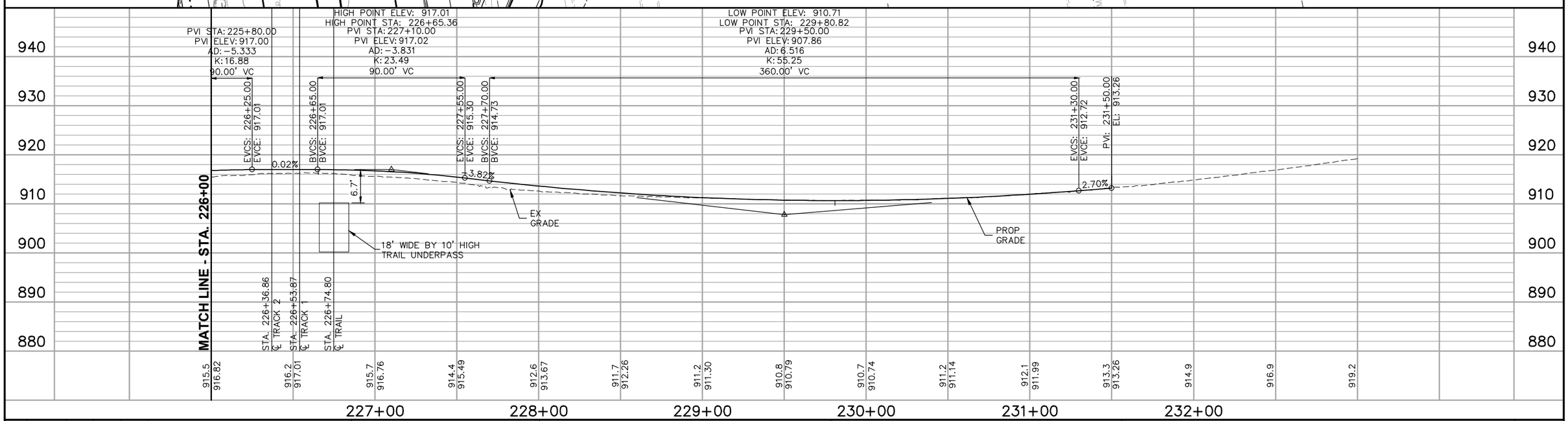

NO.	DATE	BY	CHECK	DESIGN	REVISION / SUBMITTAL
.	.	.	.	.	.
.	.	.	.	.	.
.	.	.	.	.	.
.	.	.	.	.	.
.	.	.	.	.	.
.	.	.	.	.	.
.	.	.	.	.	.
.	.	.	.	.	.
.	.	.	.	.	.
.	.	.	.	.	.

AECOM SRF Consulting Group, Inc.

PRELIMINARY ENGINEERING

METROPOLITAN COUNCIL SOUTHWEST Green Line LRT Extension

WEST-VOLUME 1 (CIVIL)-SEGMENT 2
YELLOW CIRCLE DR TO RED CIRCLE DR
PLAN AND PROFILE
STA. 226+00 TO STA. 231+50

DISCIPLINE: CIVIL

SHEET NAME: W2-CIV-PPFL-009

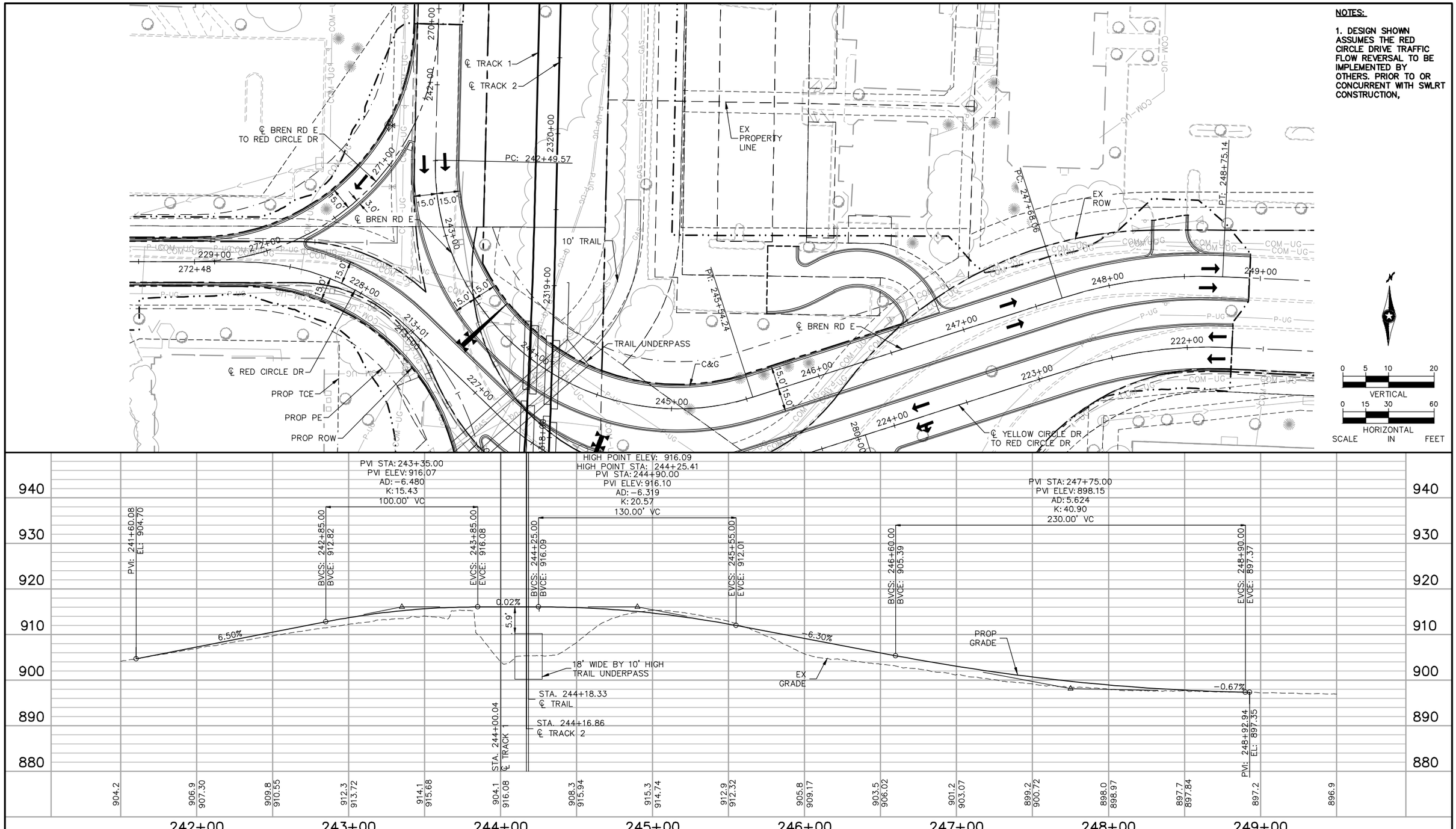

NO.	DATE	BY	CHECK	DESIGN	REVISION / SUBMITTAL
.	.	.	.	.	.
.	.	.	.	.	.
.	.	.	.	.	.
.	.	.	.	.	.
.	.	.	.	.	.
.	.	.	.	.	.
.	.	.	.	.	.
.	.	.	.	.	.
.	.	.	.	.	.
.	.	.	.	.	.

AECOM SRF Consulting Group, Inc.

PRELIMINARY ENGINEERING

METROPOLITAN COUNCIL SOUTHWEST Green Line LRT Extension

WEST-VOLUME 1 (CIVIL)-SEGMENT 2
BREN ROAD E
PLAN AND PROFILE
STA. 241+50 TO STA. 249+50

DISCIPLINE: CIVIL

SHEET NAME: W2-CIV-PPFL -010

NOTES:
1. DESIGN SHOWN ASSUMES THE RED CIRCLE DRIVE TRAFFIC FLOW REVERSAL TO BE IMPLEMENTED BY OTHERS. PRIOR TO OR CONCURRENT WITH SWLRT CONSTRUCTION.

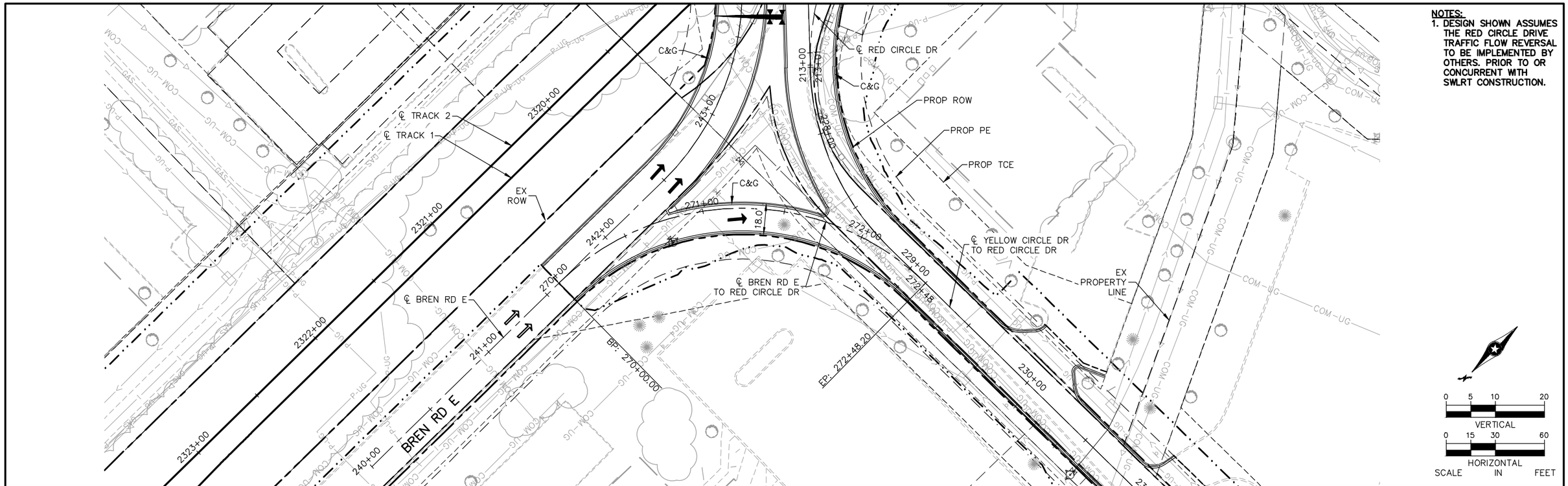

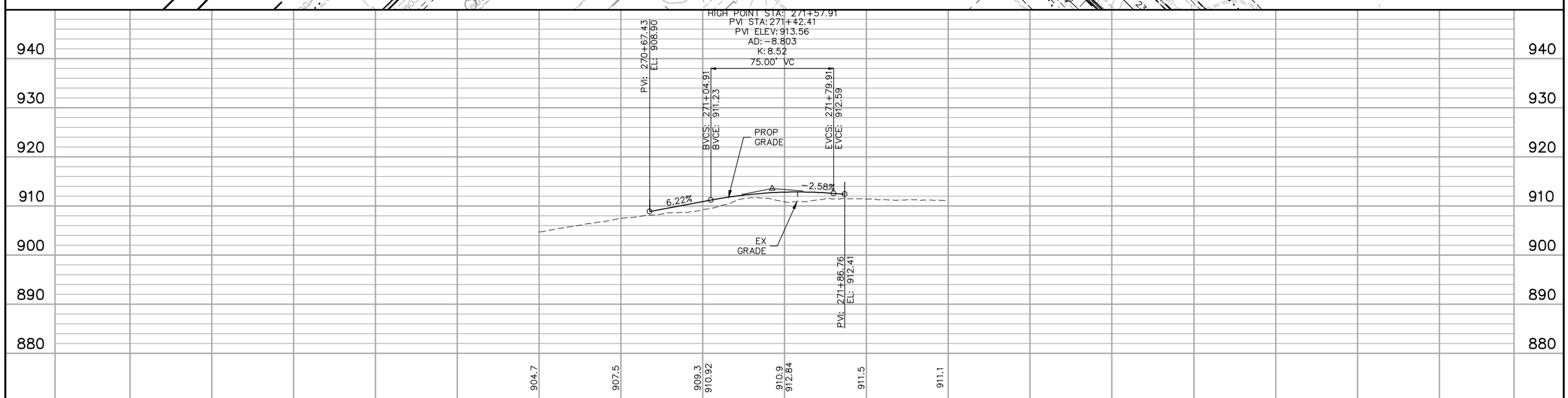

NO.	DATE	BY	CHECK	DESIGN	REVISION / SUBMITTAL
.	.	.	.	.	.
.	.	.	.	.	.
.	.	.	.	.	.
.	.	.	.	.	.
.	.	.	.	.	.
.	.	.	.	.	.
.	.	.	.	.	.
.	.	.	.	.	.
.	.	.	.	.	.
.	.	.	.	.	.

AECOM SRF Consulting Group, Inc.

PRELIMINARY ENGINEERING

METROPOLITAN COUNCIL SOUTHWEST Green Line LRT Extension

WEST-VOLUME 1 (CIVIL)-SEGMENT 2
BREN ROAD E TO RED CIRCLE DR
PLAN AND PROFILE
STA. 270+00 TO STA. 272+50

DISCIPLINE: CIVIL

SHEET NAME: W2-CIV-PPFL-011

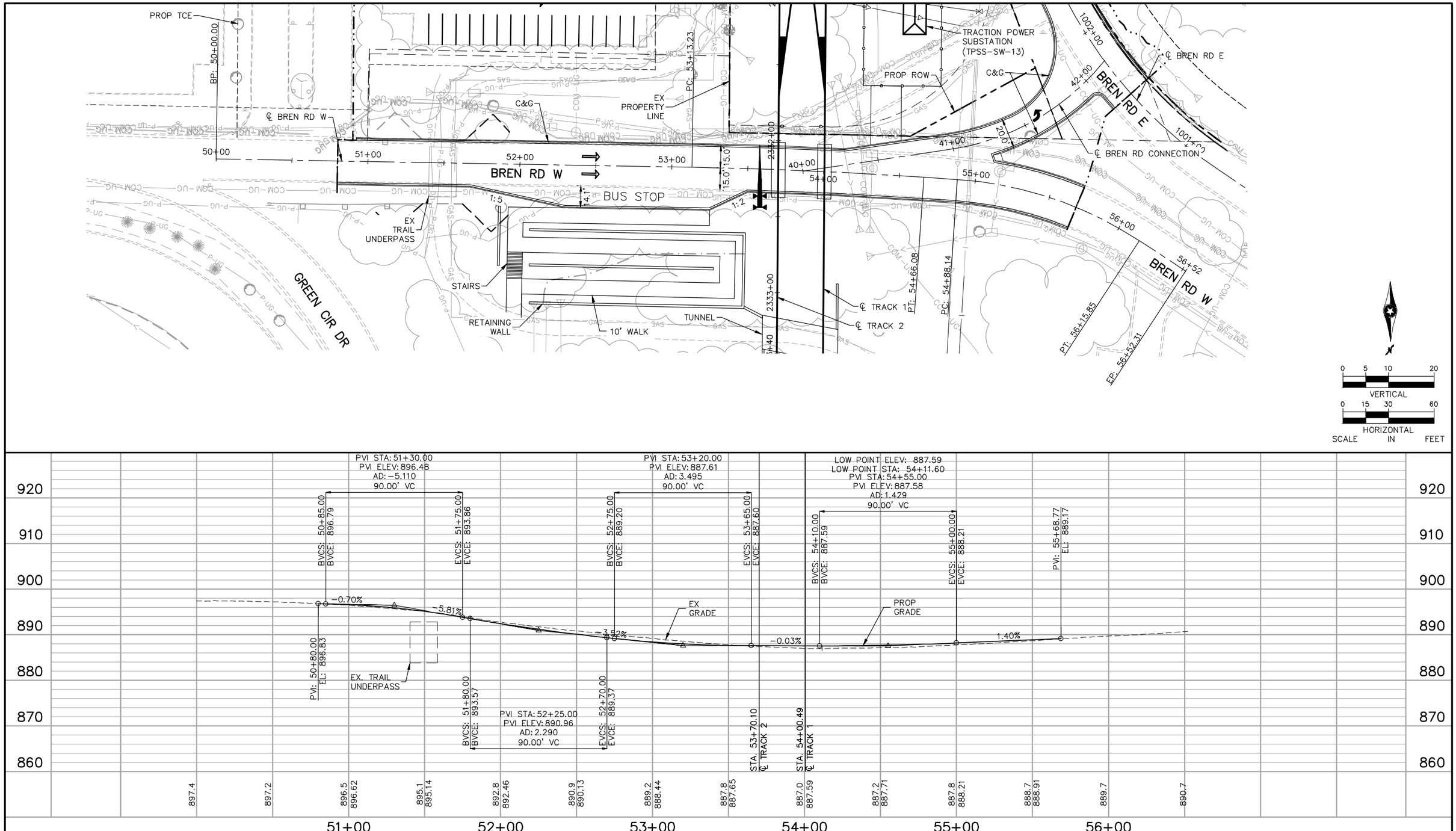

NO.	DATE	BY	CHECK	DESIGN	REVISION / SUBMITTAL
.	.	.	.	.	.
.	.	.	.	.	.
.	.	.	.	.	.
.	.	.	.	.	.
.	.	.	.	.	.
.	.	.	.	.	.
.	.	.	.	.	.
.	.	.	.	.	.
.	.	.	.	.	.

AECOM SRF Consulting Group, Inc.

PRELIMINARY ENGINEERING

METROPOLITAN COUNCIL

SOUTHWEST Green Line LRT Extension

WEST-VOLUME 1 (CIVIL)-SEGMENT 2
BREN ROAD W
PLAN AND PROFILE
STA. 50+00 TO STA. 56+52.31

DISCIPLINE: CIVIL

SHEET NAME: W2-CIV-PPFL-012

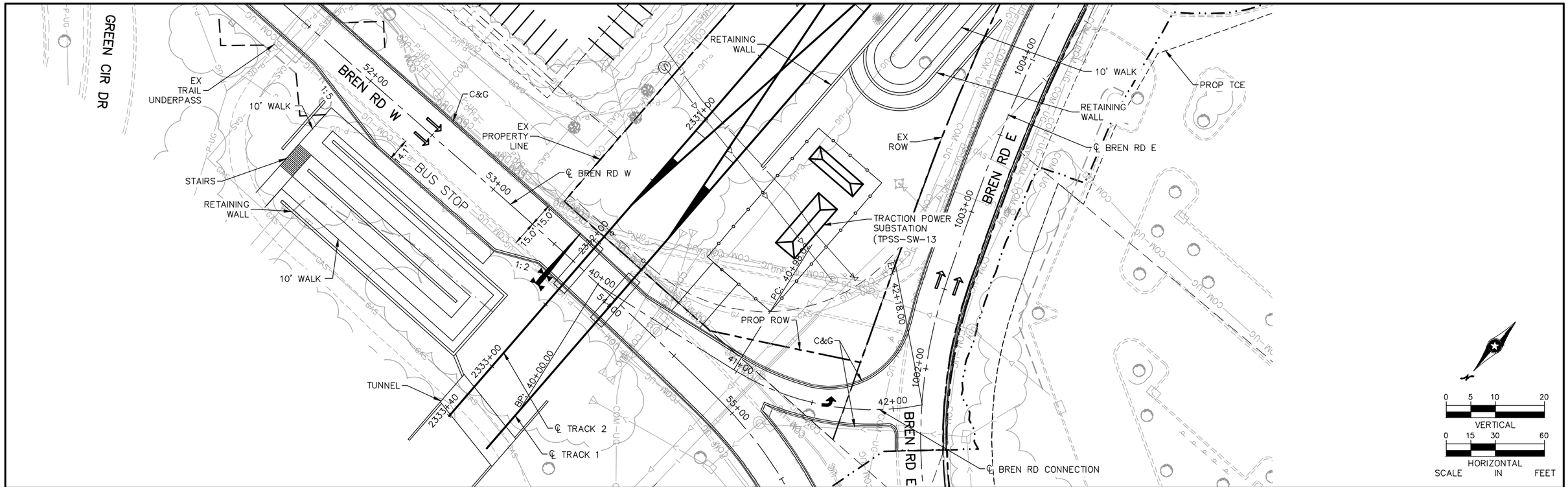

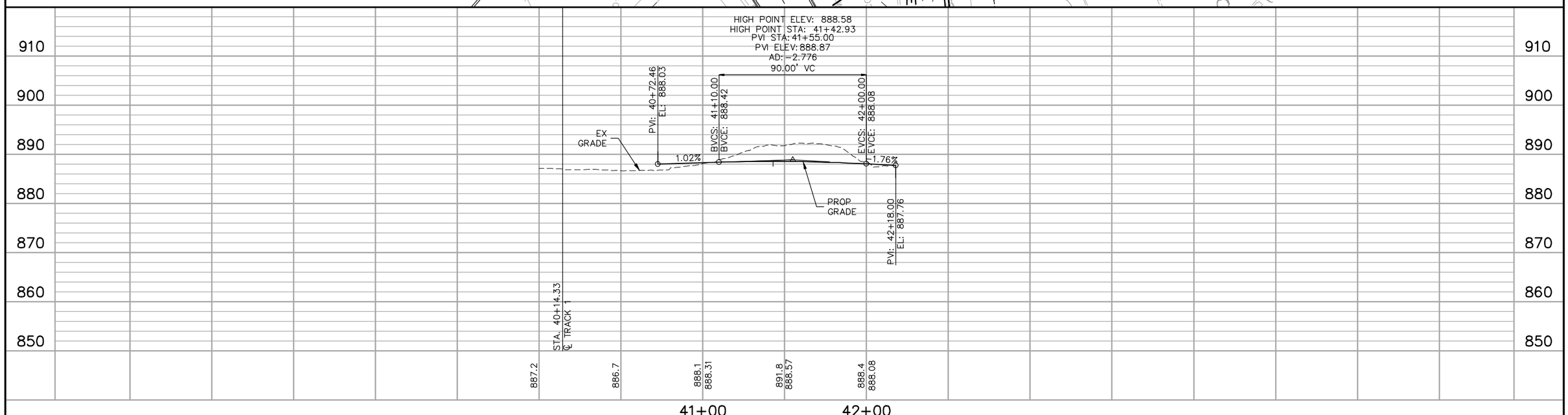

NO.	DATE	BY	CHECK	DESIGN	REVISION / SUBMITTAL
.	.	.	.	.	.
.	.	.	.	.	.
.	.	.	.	.	.
.	.	.	.	.	.
.	.	.	.	.	.
.	.	.	.	.	.
.	.	.	.	.	.
.	.	.	.	.	.
.	.	.	.	.	.
.	.	.	.	.	.

AECOM SRF Consulting Group, Inc.

PRELIMINARY ENGINEERING

METROPOLITAN COUNCIL SOUTHWEST Green Line LRT Extension

WEST-VOLUME 1 (CIVIL)-SEGMENT 2
BREN ROAD CONNECTION
PLAN AND PROFILE
STA. 40+00 TO STA. 42+18.00

DISCIPLINE: CIVIL

SHEET NAME: W2-CIV-PPFL-013

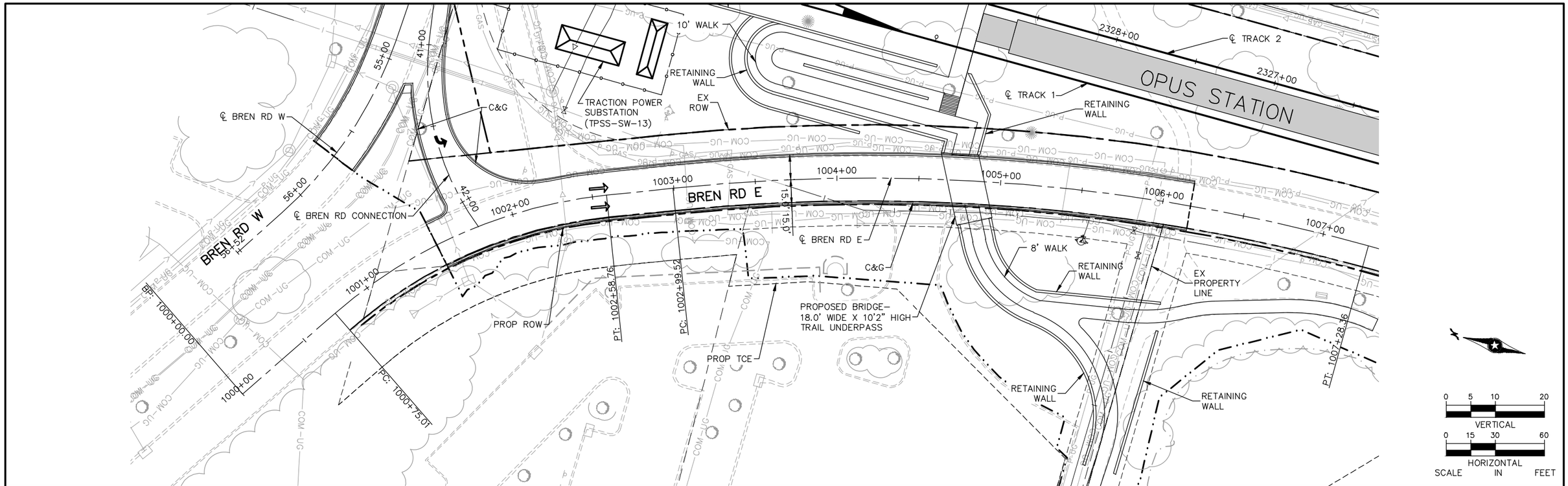

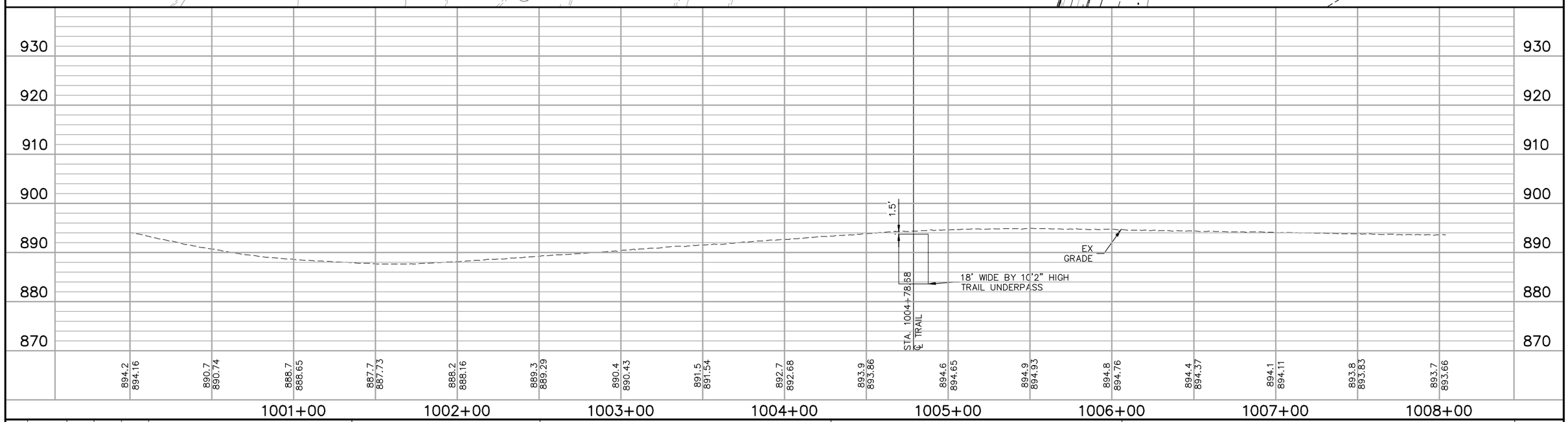

NO.	DATE	BY	CHECK	DESIGN	REVISION / SUBMITTAL
.	.	.	.	.	.
.	.	.	.	.	.
.	.	.	.	.	.
.	.	.	.	.	.
.	.	.	.	.	.
.	.	.	.	.	.
.	.	.	.	.	.
.	.	.	.	.	.
.	.	.	.	.	.
.	.	.	.	.	.

AECOM SRF Consulting Group, Inc.

PRELIMINARY ENGINEERING

METROPOLITAN COUNCIL SOUTHWEST Green Line LRT Extension

WEST-VOLUME 1 (CIVIL)-SEGMENT 2
BREN ROAD E
PLAN AND PROFILE
STA. 1000+00 TO STA. 1006+17

DISCIPLINE: CIVIL

SHEET NAME: W2-CIV-PPFL-014

SHEET 78 OF 107

Jul, 01 2014 01:51 pm V:\3200_PEC-W\CAD\SEGMENT-W2\SHEET\CIVIL\W2-CIV-PLN-001.dwg By: yangdk

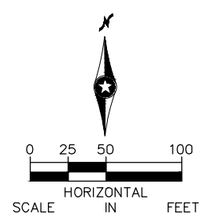

NO.	DATE	BY	CHECK	DESIGN	REVISION / SUBMITTAL
.	.	.	.	.	.
.	.	.	.	.	.
.	.	.	.	.	.
.	.	.	.	.	.
.	.	.	.	.	.
.	.	.	.	.	.
.	.	.	.	.	.
.	.	.	.	.	.
.	.	.	.	.	.

AECOM SRF Consulting Group, Inc.

PRELIMINARY ENGINEERING

METROPOLITAN COUNCIL

SOUTHWEST Green Line LRT Extension

WEST-VOLUME 1 (CIVIL)-SEGMENT 2
VALLEY VIEW ROAD AT SHADY OAK ROAD
PLAN VIEW

DISCIPLINE: CIVIL

SHEET NAME: W2-CIV-ADD-001

SHEET 79 OF 107

Jul, 01 2014 01:53 pm V:\3200_PEC-W\CAD\SEGMENT-W2\SHEET\CIVIL\W2-CIV-ADD.dwg By: yangdk

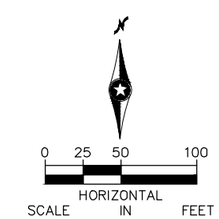

NO.	DATE	BY	CHECK	DESIGN	REVISION / SUBMITTAL
.	.	.	.	.	.
.	.	.	.	.	.
.	.	.	.	.	.
.	.	.	.	.	.
.	.	.	.	.	.
.	.	.	.	.	.
.	.	.	.	.	.
.	.	.	.	.	.
.	.	.	.	.	.

AECOM SRF Consulting Group, Inc.

PRELIMINARY ENGINEERING

METROPOLITAN COUNCIL

SOUTHWEST Green Line LRT Extension

WEST-VOLUME 1 (CIVIL)-SEGMENT 2
70TH STREET AT SHDAY OAK ROAD
PLAN VIEW

DISCIPLINE: CIVIL

SHEET NAME: W2-CIV-ADD-002

SHEET 79B OF 107

Aug. 27 2014 03:54 pm V:\3200_PEC-W\CAD\SEGMENT-W2\SHEET\CIVIL\W2-CIV-ADD.dwg By: Boscha

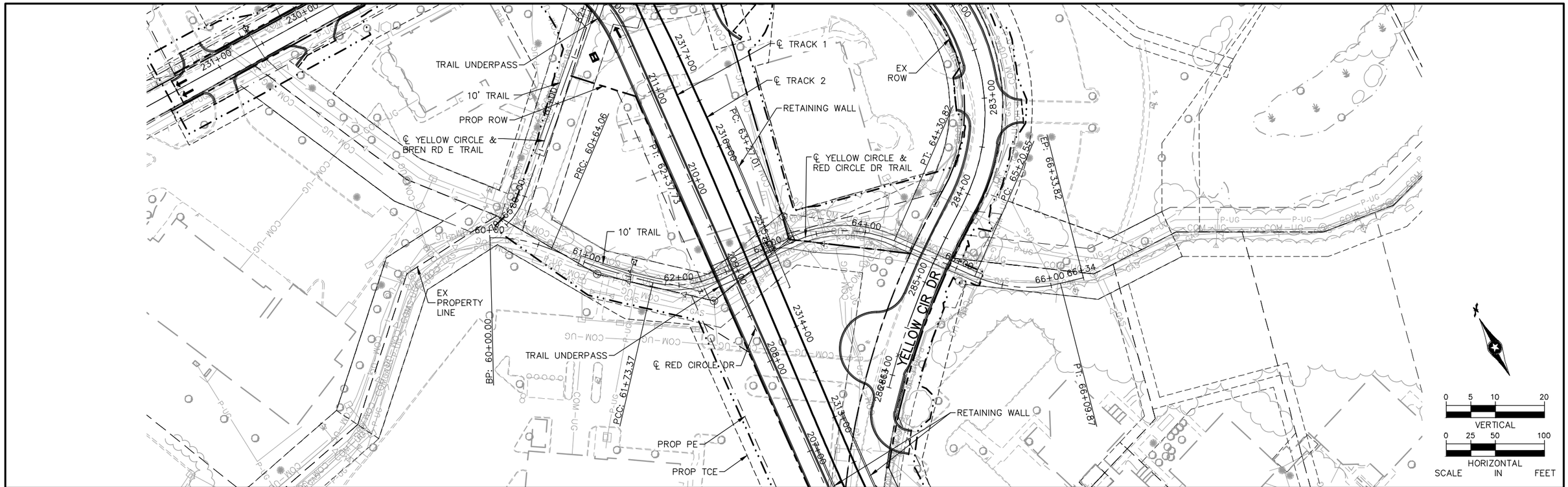

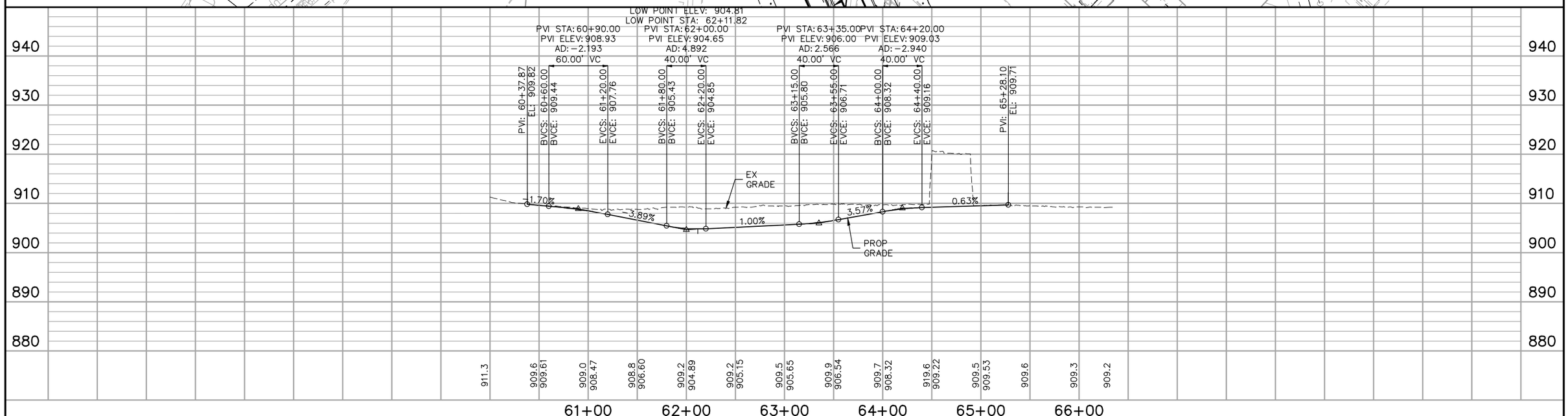

NO.	DATE	BY	CHECK	DESIGN	REVISION / SUBMITTAL
.	.	.	.	.	.
.	.	.	.	.	.
.	.	.	.	.	.
.	.	.	.	.	.
.	.	.	.	.	.
.	.	.	.	.	.
.	.	.	.	.	.
.	.	.	.	.	.
.	.	.	.	.	.

AECOM SRF Consulting Group, Inc.

PRELIMINARY ENGINEERING

METROPOLITAN COUNCIL SOUTHWEST Green Line LRT Extension

WEST-VOLUME 1 (CIVIL)-SEGMENT 2
YELLOW AND RED CRICLE TRAIL
PLAN AND PROFILE
STA. 60+37.87 TO STA. 65+28.10

DISCIPLINE: CIVIL

SHEET NAME: W2-CIV-TRL-001

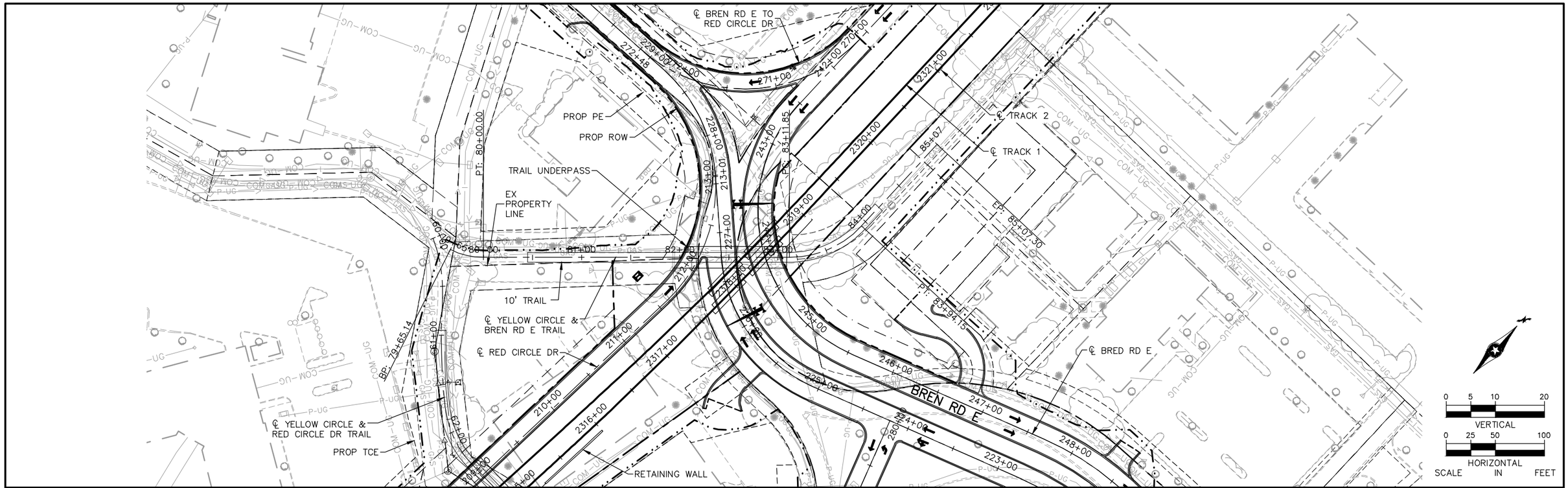

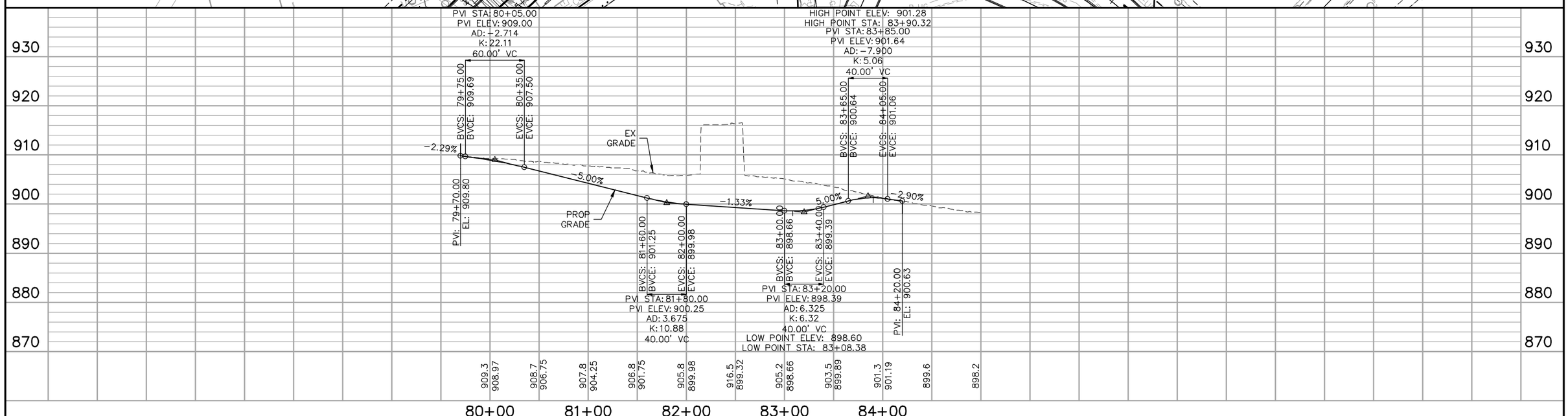

NO.	DATE	BY	CHECK	DESIGN	REVISION / SUBMITTAL
.	.	.	.	.	.
.	.	.	.	.	.
.	.	.	.	.	.
.	.	.	.	.	.
.	.	.	.	.	.
.	.	.	.	.	.
.	.	.	.	.	.
.	.	.	.	.	.
.	.	.	.	.	.
.	.	.	.	.	.

AECOM SRF Consulting Group, Inc.

PRELIMINARY ENGINEERING

METROPOLITAN COUNCIL SOUTHWEST Green Line LRT Extension

WEST-VOLUME 1 (CIVIL)-SEGMENT 2
TRAILS
PLAN AND PROFILE
STA. 79+70 TO STA. 84+20

DISCIPLINE: CIVIL

SHEET NAME: W2-CIV-TRL-002

SHEET 81 OF 107

Jul, 01 2014 01:56 pm V:\3200_PEC-W\CAD\SEGMENT-W2\SHEET\CIVIL\W2-CIV-TRL-001.dwg By: yangdk

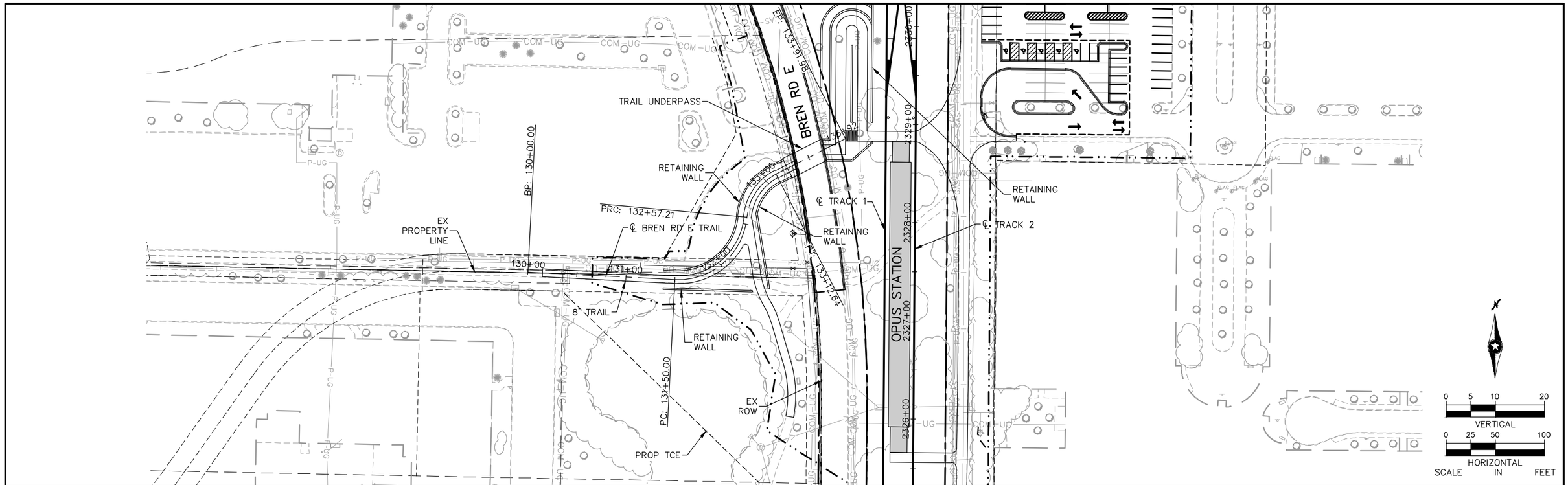

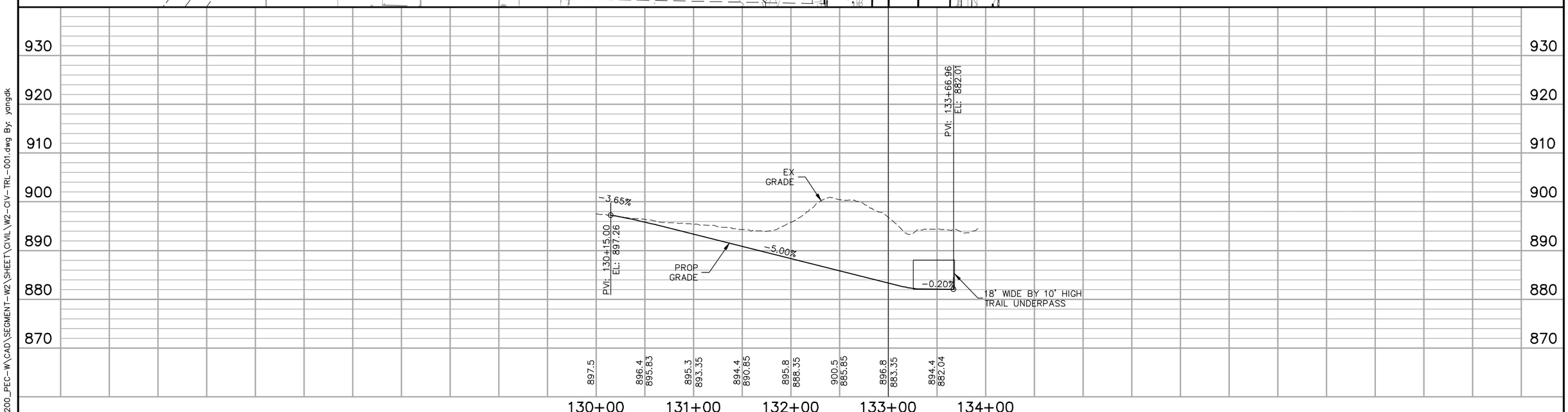

NO.	DATE	BY	CHECK	DESIGN	REVISION / SUBMITTAL
.	.	.	.	.	.
.	.	.	.	.	.
.	.	.	.	.	.
.	.	.	.	.	.
.	.	.	.	.	.
.	.	.	.	.	.
.	.	.	.	.	.
.	.	.	.	.	.
.	.	.	.	.	.
.	.	.	.	.	.

AECOM SRF Consulting Group, Inc.

PRELIMINARY ENGINEERING

METROPOLITAN COUNCIL SOUTHWEST Green Line LRT Extension

WEST-VOLUME 1 (CIVIL)-SEGMENT 2
TRAILS
PLAN AND PROFILE
STA. 130+15 TO STA. 133+66.96

DISCIPLINE: CIVIL

SHEET NAME: W2-CIV-TRL-003

SHEET 82 OF 107

Jul, 01 2014 01:57 pm V:\3200_PEC-W\CAD\SEGMENT-W2\SHEET\CIVIL\W2-CIV-TRL-001.dwg By: yangdk

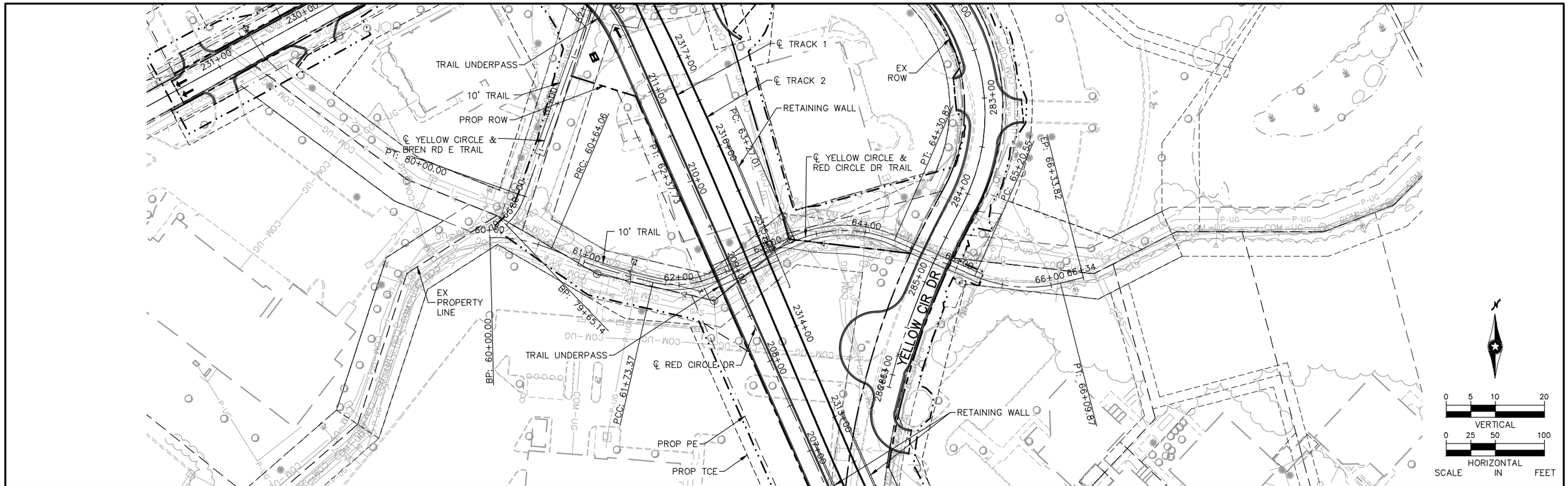

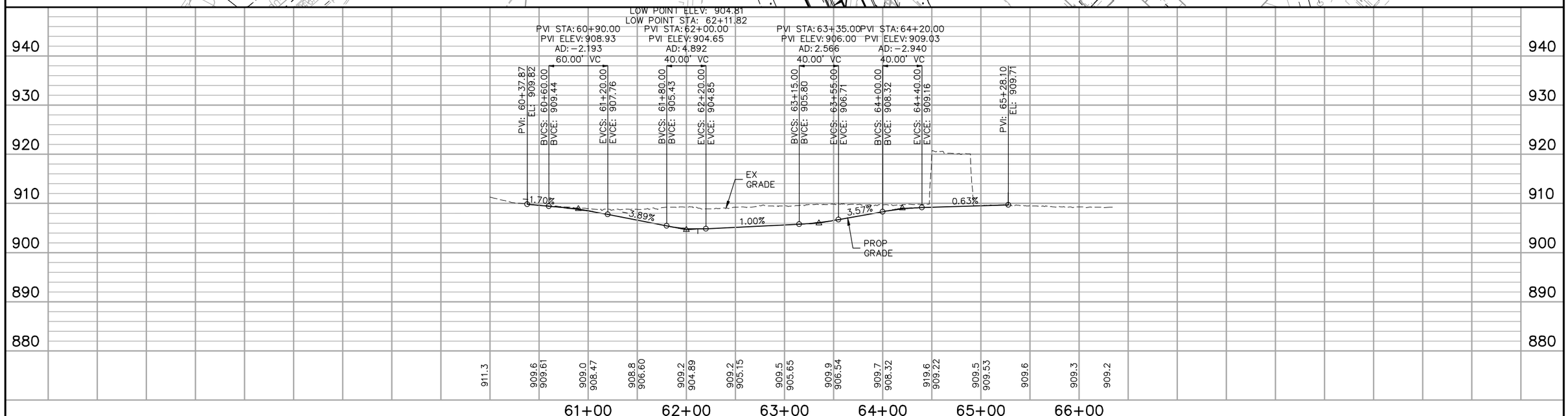

NO.	DATE	BY	CHECK	DESIGN	REVISION / SUBMITTAL
.	.	.	.	.	.
.	.	.	.	.	.
.	.	.	.	.	.
.	.	.	.	.	.
.	.	.	.	.	.
.	.	.	.	.	.
.	.	.	.	.	.
.	.	.	.	.	.
.	.	.	.	.	.
.	.	.	.	.	.

AECOM SRF Consulting Group, Inc.

PRELIMINARY ENGINEERING

METROPOLITAN COUNCIL SOUTHWEST Green Line LRT Extension

WEST-VOLUME 1 (CIVIL)-SEGMENT 2
YELLOW AND RED CIRCLE TRAIL
PLAN AND PROFILE
STA. 60+00 TO STA. 66+33.82

DISCIPLINE: CIVIL

SHEET NAME: W2-CIV-TRL-004

NOTES:
280 REQUIRED PARKING STALLS (YEAR 2030)
117 PROVIDED PARKING STALLS (NORTH LOT)
154 PROVIDED PARKING STALLS (SOUTH LOT)

KEY MAP:

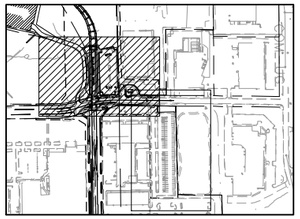

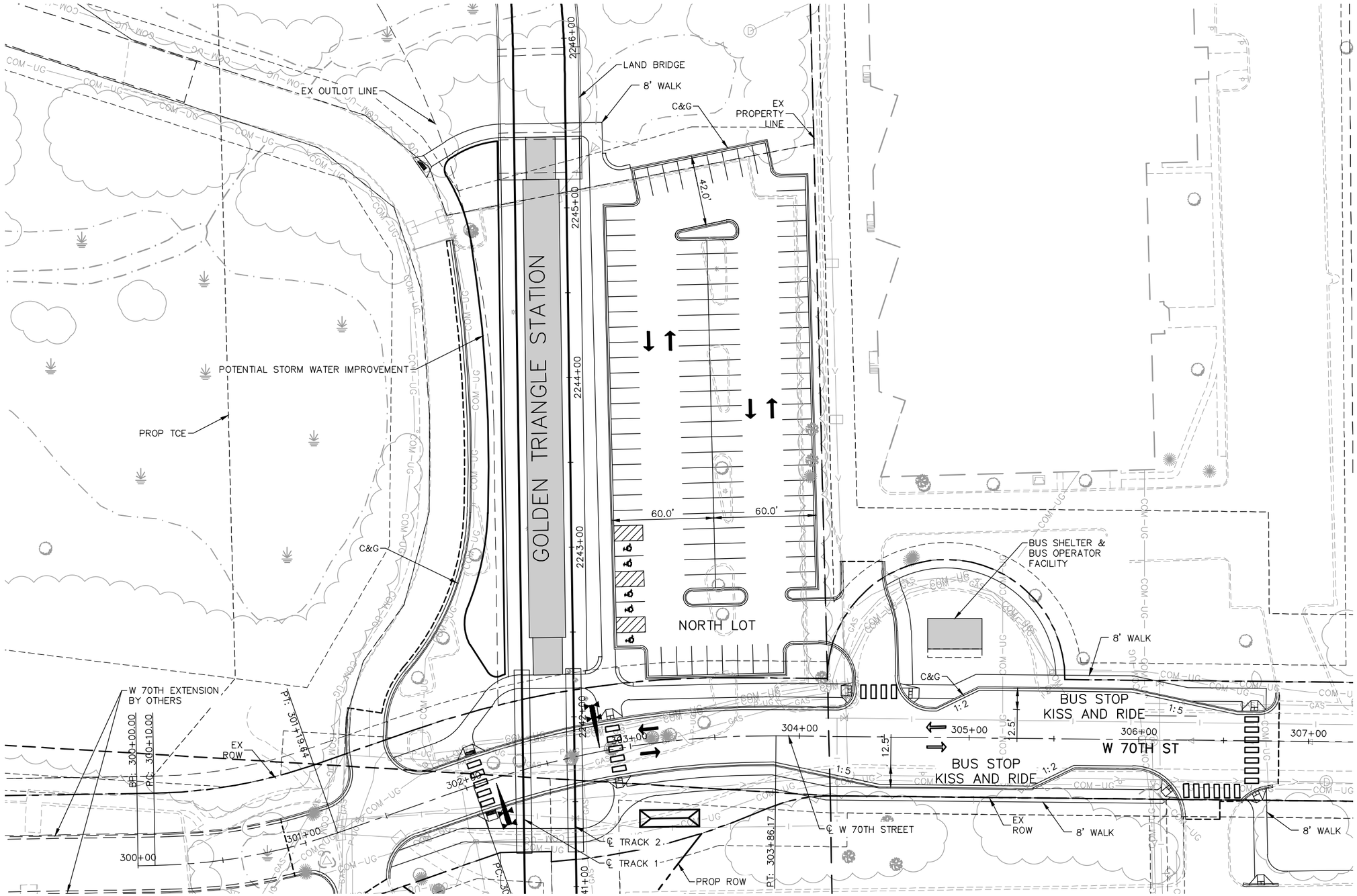

0 15 30 60
HORIZONTAL SCALE IN FEET

NO.	DATE	BY	CHECK	DESIGN	REVISION / SUBMITTAL

AECOM SRF Consulting Group, Inc.

PRELIMINARY ENGINEERING

METROPOLITAN COUNCIL SOUTHWEST Green Line LRT Extension

WEST-VOLUME 1 (CIVIL)-SEGMENT 2
GOLDEN TRIANGLE STATION
PARK AND RIDE SITE PLAN

DISCIPLINE: CIVIL

SHEET NAME: W2-CIV-PRK-001

NOTES:
280 REQUIRED PARKING STALLS (YEAR 2030)
117 PROVIDED PARKING STALLS (NORTH LOT)
154 PROVIDED PARKING STALLS (SOUTH LOT)

KEY MAP:

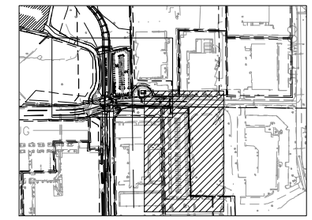

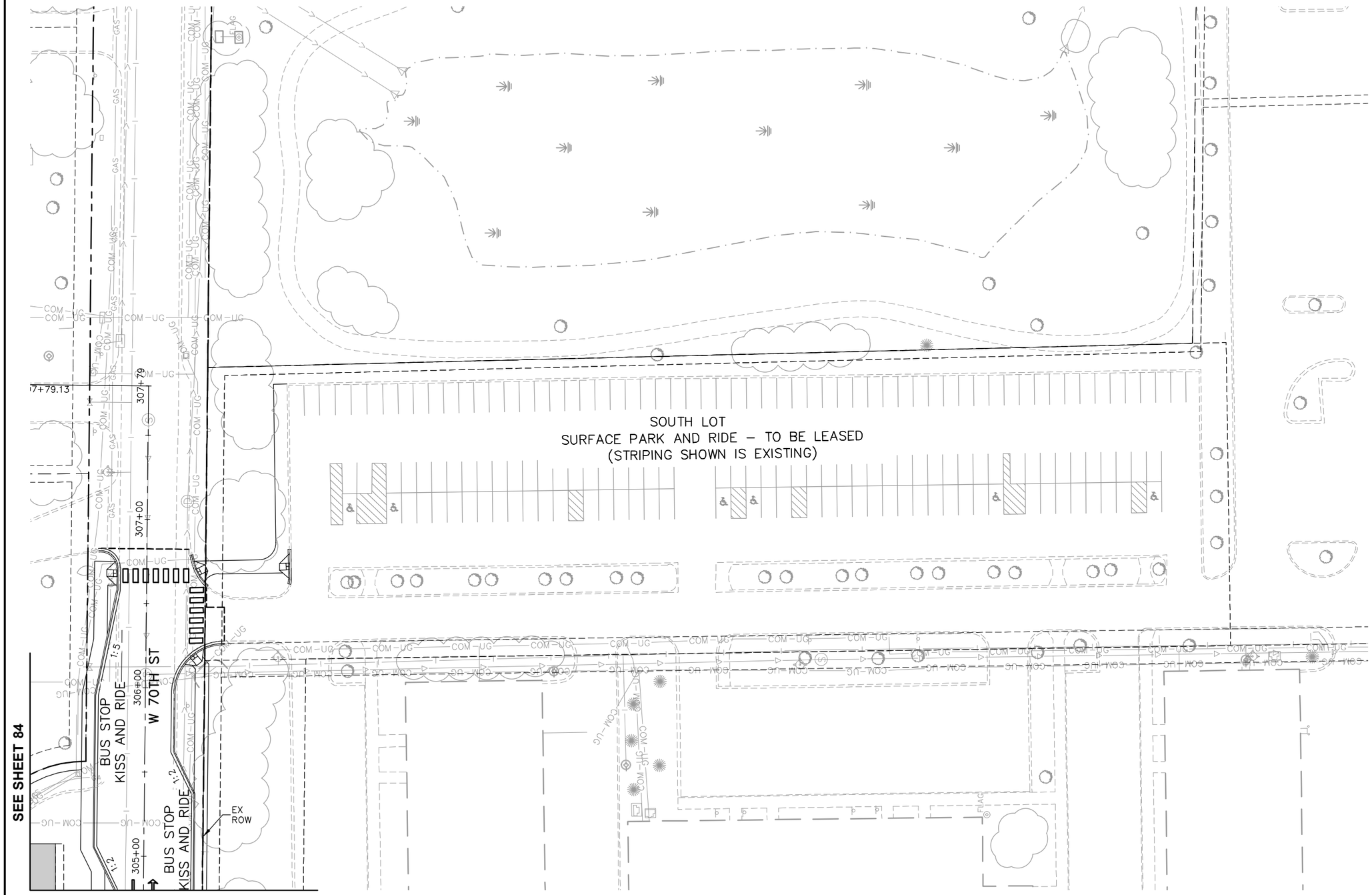

0 15 30 60
HORIZONTAL
SCALE IN FEET

NO.	DATE	BY	CHECK	DESIGN	REVISION / SUBMITTAL

AECOM SRF Consulting Group, Inc.

PRELIMINARY ENGINEERING

METROPOLITAN COUNCIL

SOUTHWEST Green Line LRT Extension

WEST-VOLUME 1 (CIVIL)-SEGMENT 2
GOLDEN TRIANGLE STATION
PARK AND RIDE SITE PLAN

DISCIPLINE: CIVIL

SHEET NAME: W2-CIV-PRK-002

NOTES:
150 REQUIRED PARKING STALLS (YEAR 2030)
165 PROVIDED PARKING STALLS

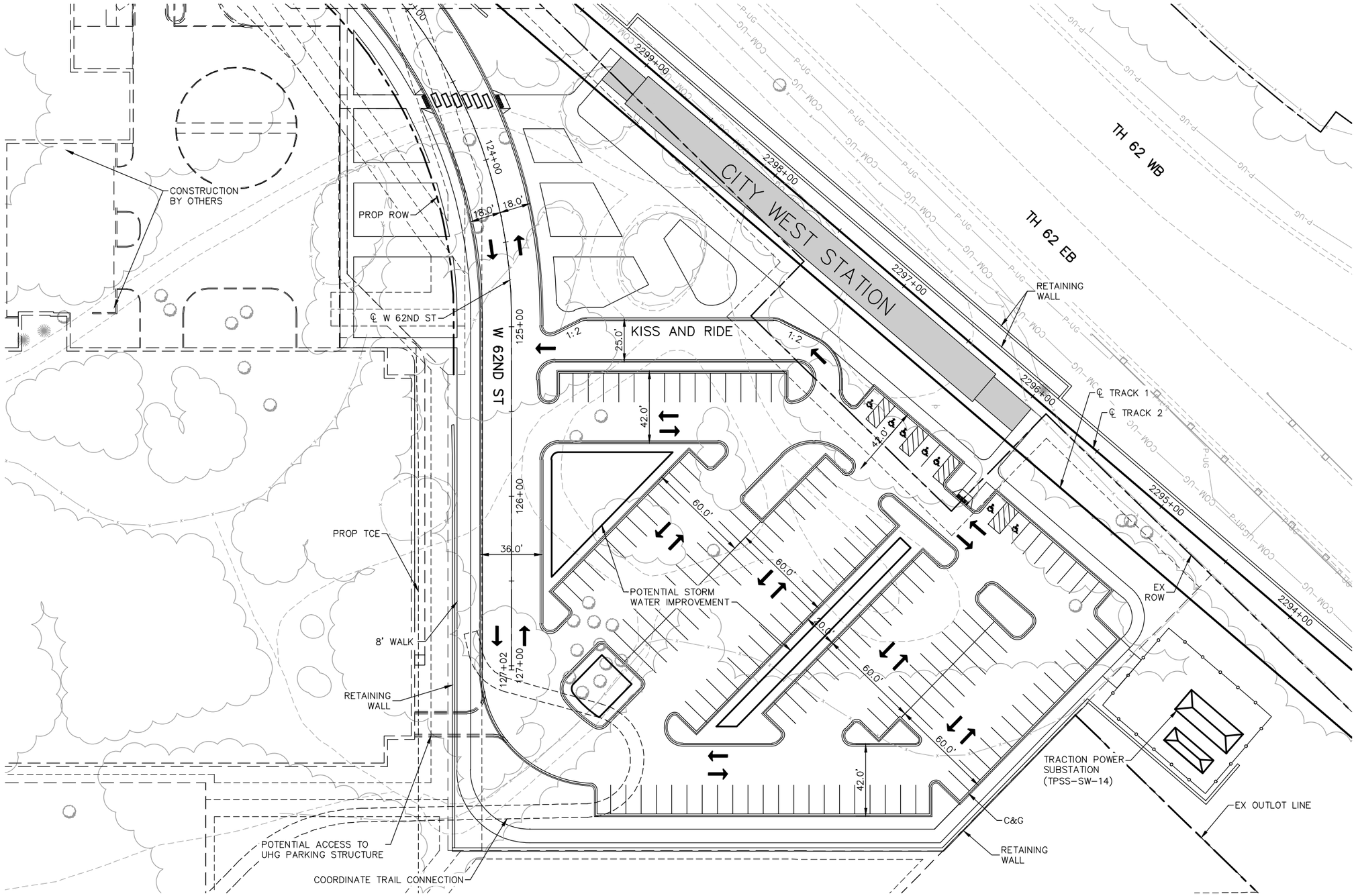

NO.	DATE	BY	CHECK	DESIGN	REVISION / SUBMITTAL

AECOM SRF Consulting Group, Inc.

PRELIMINARY ENGINEERING

METROPOLITAN COUNCIL SOUTHWEST Green Line LRT Extension

WEST-VOLUME 1 (CIVIL)-SEGMENT 2
CITY WEST STATION
PARK AND RIDE SITE PLAN

DISCIPLINE: CIVIL

SHEET NAME: W2-CIV-PRK-003

SHEET 86 OF 107

Jul, 01 2014 02:06 pm V:\3200_PEC-W\CAD\SEGMENT-W2\SHEET\CIVIL\W2-CIV-PRK-001.dwg By: yangdk

NOTES:
60 REQUIRED PARKING STALLS (YEAR 2030)
98 PROVIDED PARKING STALLS

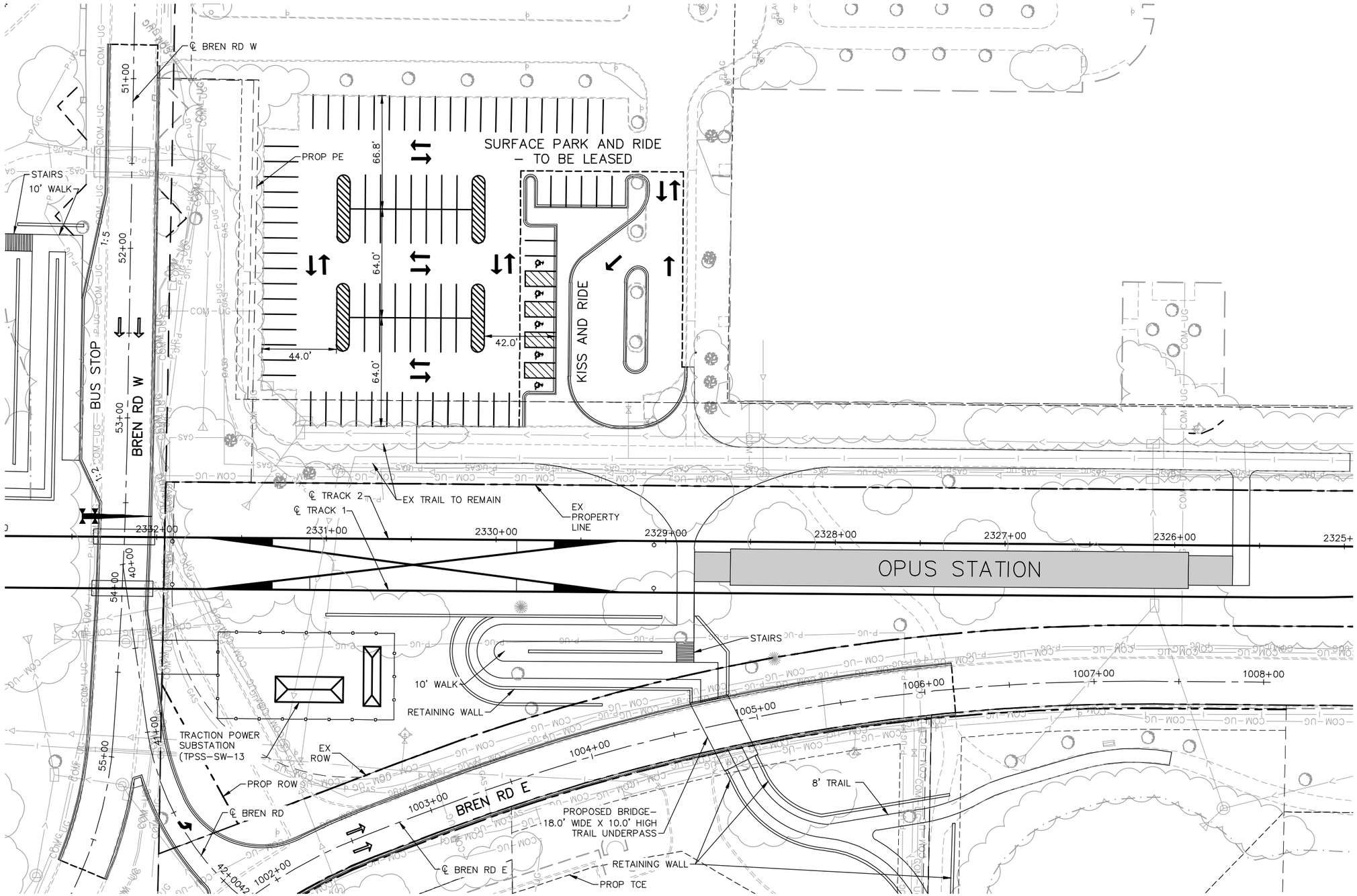

0 15 30 60
HORIZONTAL
SCALE IN FEET

NO.	DATE	BY	CHECK	DESIGN	REVISION / SUBMITTAL

AECOM SRF Consulting Group, Inc.

PRELIMINARY ENGINEERING

METROPOLITAN COUNCIL
SOUTHWEST Green Line LRT Extension

WEST-VOLUME 1 (CIVIL)-SEGMENT 2
OPUS STATION
PARK AND RIDE SITE PLAN

DISCIPLINE: CIVIL
SHEET NAME: W2-CIV-PRK-004

SHEET 87 OF 107

Aug, 27 2014 04:15 pm V:\3200_PEC-W\CAD\SEGMENT-W2\SHEET\CIVIL\W2-CIV-PRK-001.dwg By: Boscha

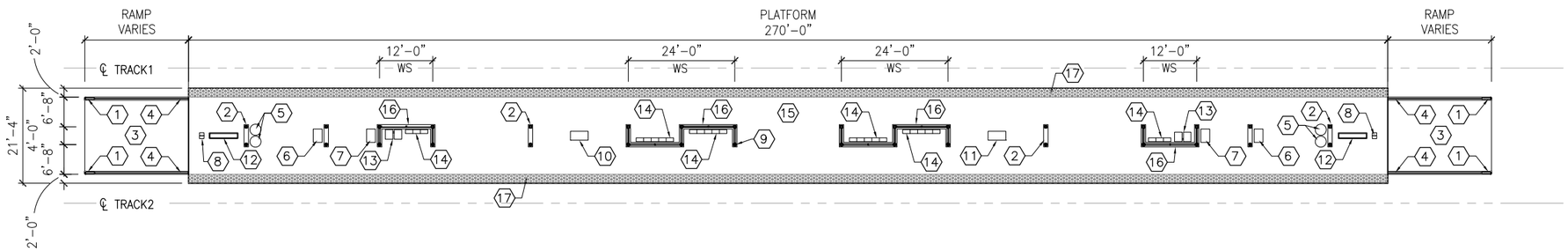

1 CENTER PLATFORM AT GOLDEN TRIANGLE, CITY WEST, AND OPUS STATIONS
SCALE: 1"=30'-0"

0 7.5 15 30
SCALE

KEYNOTES

(NOT ALL NOTES MAY APPLY TO THIS SHEET)

1	ENTRY SIGN
2	LIGHT MOUNTED TO STRUCTURE
3	ACCESS RAMP
4	HAND RAIL
5	TRASH/RECYCLING RECEPTACLE, BLAST CONTROLLING TYPE
6	TICKET VENDING MACHINE
7	FUTURE TICKET VENDING MACHINE
8	STORED VALUE VALIDATOR
9	EMERGENCY CALL BOX
10	COMMUNICATION CABINET
11	ELECTRICAL CABINET
12	INFORMATION KIOSK WITH TRANSIT INFO AND ADVERTISING
13	BENCH
14	LEANING RAIL
15	CONCRETE PLATFORM
16	SHELTER: WINDSCREEN,LIGHT,HEATERS WITH CANOPY ABOVE
17	DETECTABLE WARNING AT BOARDING EDGE

NO.	DATE	BY	CHECK	DESIGN	REVISION / SUBMITTAL

AECOM

PRELIMINARY ENGINEERING

METROPOLITAN COUNCIL

SOUTHWEST Green Line LRT Extension

WEST-VOLUME 1 (CIVIL)-SEGMENT 2
PLATFORM LAYOUT
GOLDEN TRIANGLE, CITY WEST, OPUS STATIONS

DISCIPLINE: ARCHITECTURE

SHEET NAME: W2-ARC-STA-PLN

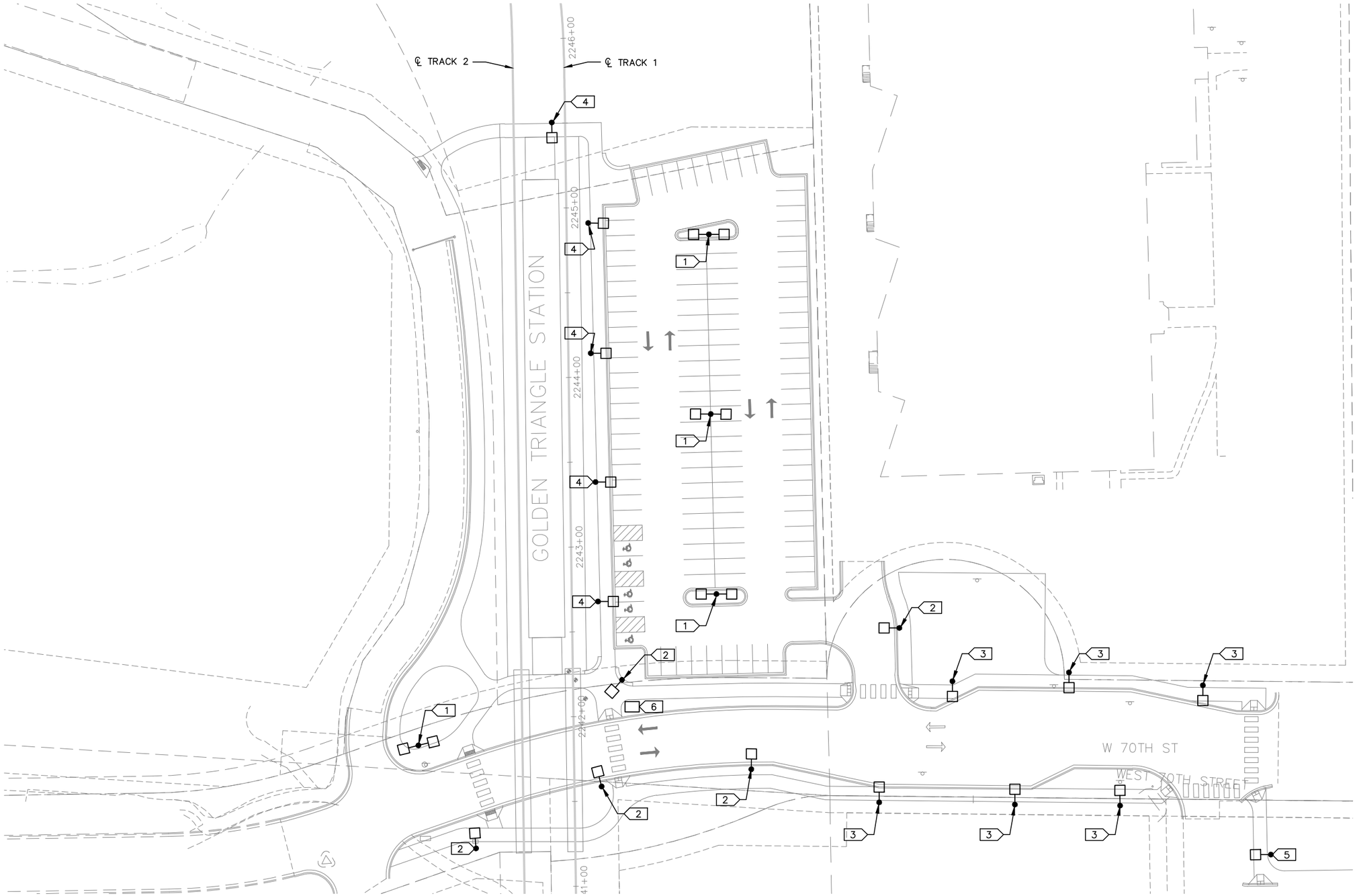

KEYNOTES:

1. DOUBLE POLE MOUNTED LUMINAIRE. LED, TYPE 5 DISTRIBUTION, COOL WHITE COLOR TEMPERATURE, 18,000 LUMENS, MOUNTED AT 30'.
2. SINGLE POLE MOUNTED LUMINAIRE. LED, TYPE 3 DISTRIBUTION, COOL WHITE COLOR TEMPERATURE,. 18,000 LUMENS, MOUNTED AT 30'.
3. SINGLE POLE MOUNTED LUMINAIRE. LED, TYPE 4 DISTRIBUTION, COOL WHITE COLOR TEMPERATURE, 24,000 LUMENS, MOUNTED AT 30'.
4. SINGLE POLE MOUNTED LUMINAIRE. LED, TYPE 2 DISTRIBUTION, COOL WHITE COLOR TEMPERATURE, 9,000 LUMENS, MOUNTED AT 15'.
5. SINGLE POLE MOUNTED LUMINAIRE. LED, TYPE 2 DISTRIBUTION, COOL WHITE COLOR TEMPERATURE, 9,000 LUMENS, MOUNTED AT 30'.
6. ELECTRICAL EQUIPMENT.

GENERAL NOTE:

1. NO NEW LIGHTING IN EXISTING SOUTH PARKING LOT.

0 15 30 60
HORIZONTAL SCALE IN FEET

NO.	DATE	BY	CHECK	DESIGN	REVISION / SUBMITTAL

AECOM
M-P CONSULTANTS
CONSULTING ENGINEERING
MINNEAPOLIS • MINNESOTA

PRELIMINARY ENGINEERING

METROPOLITAN COUNCIL
SOUTHWEST Green Line LRT Extension

WEST - VOLUME 1 (CIVIL) - SEGMENT 2
GOLDEN TRIANGLE STATION
PARK & RIDE
SITE LIGHTING PLAN

DISCIPLINE: ELECTRICAL
SHEET NAME: W2-ELE-PRK-001

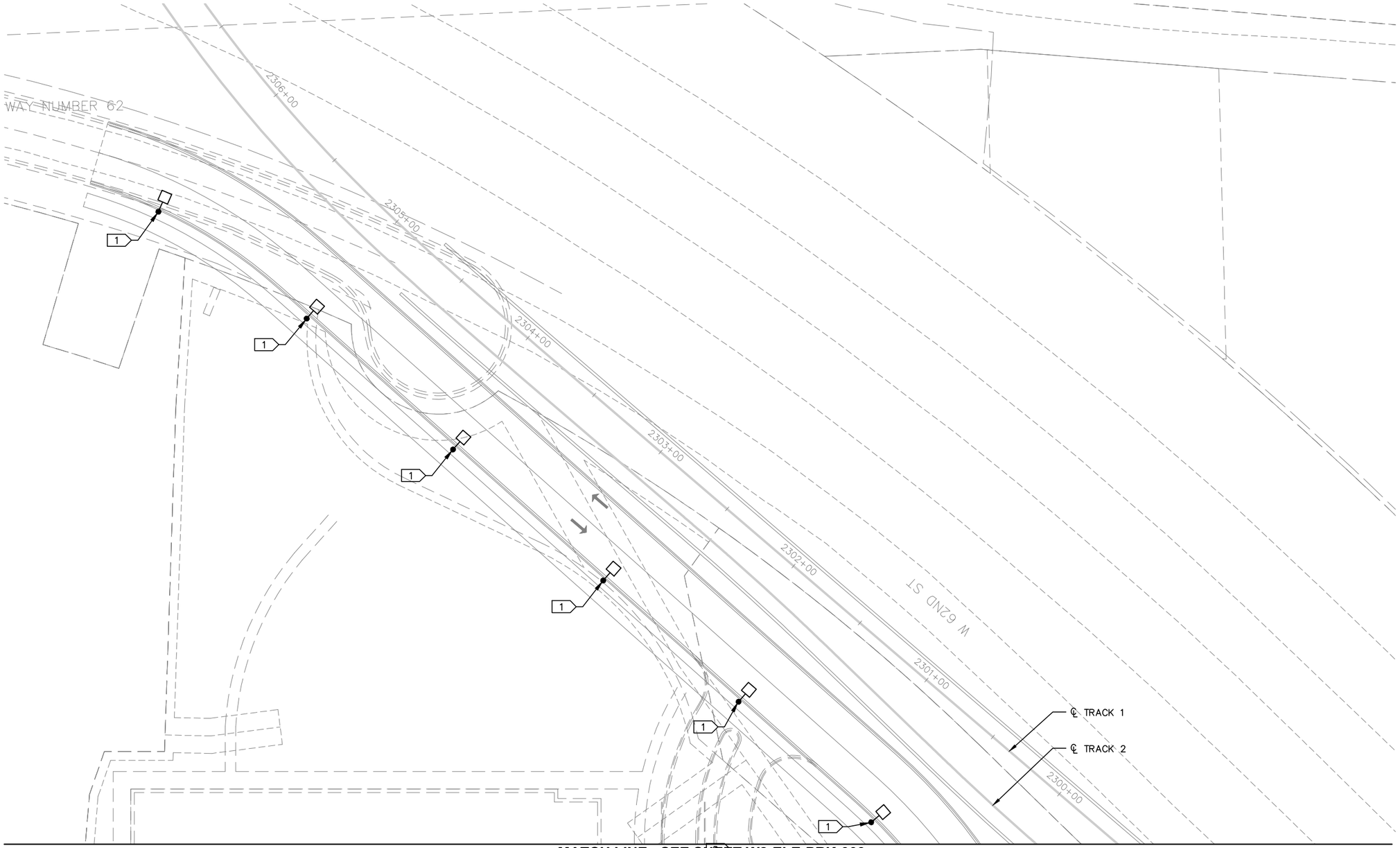

MATCH LINE - SEE SHEET W2-ELE-PRK-003

KEYNOTES:

1. SINGLE POLE MOUNTED LUMINAIRE. LED, TYPE 3 DISTRIBUTION, COOL WHITE COLOR TEMPERATURE, 18,000 LUMENS, MOUNTED AT 30'.

0 15 30 60
HORIZONTAL SCALE IN FEET

NO.	DATE	BY	CHECK	DESIGN	REVISION / SUBMITTAL

AECOM
M-P CONSULTANTS
CONSULTING ENGINEERING
MINNEAPOLIS • MINNESOTA

PRELIMINARY ENGINEERING

METROPOLITAN COUNCIL
SOUTHWEST Green Line LRT Extension

WEST - VOLUME 1 (CIVIL) - SEGMENT 2
CITY WEST STATION
PARK & RIDE
SITE LIGHTING PLAN 1 OF 2

DISCIPLINE: ELECTRICAL
SHEET NAME: W2-ELE-PRK-002

SHEET 90 OF 107

Jun, 26 2014 09:29 am V:\3200_pec-w\CAD\SEGMENT-W2\SHEET\ELECTRICAL\W2-ELE-PRK-001.dwg By: Adam

MATCH LINE - SEE SHEET W2-ELE-PRK-002

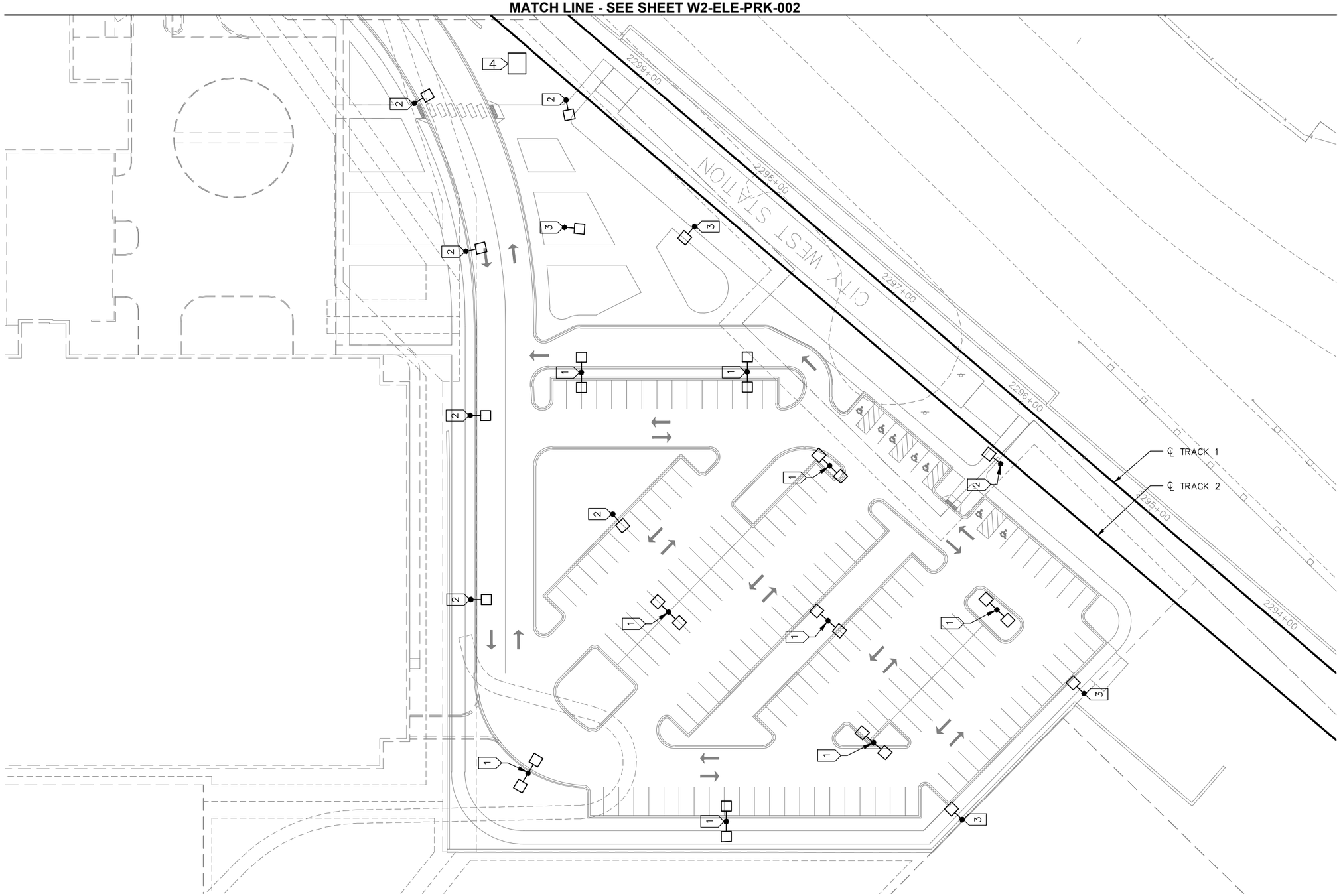

KEYNOTES:

1. DOUBLE POLE MOUNTED LUMINAIRE. LED, TYPE 5 DISTRIBUTION, COOL WHITE COLOR TEMPERATURE, 18,000 LUMENS, MOUNTED AT 30'.
2. SINGLE POLE MOUNTED LUMINAIRE. LED, TYPE 3 DISTRIBUTION, COOL WHITE COLOR TEMPERATURE, 18,000 LUMENS, MOUNTED AT 30'.
3. SINGLE POLE MOUNTED LUMINAIRE. LED, TYPE 2 DISTRIBUTION, COOL WHITE COLOR TEMPERATURE, 9,000 LUMENS, MOUNTED AT 30'.
4. ELECTRICAL EQUIPMENT.

NO.	DATE	BY	CHECK	DESIGN	REVISION / SUBMITTAL

AECOM
M-P CONSULTANTS
CONSULTING ENGINEERING
MINNEAPOLIS · MINNESOTA

PRELIMINARY ENGINEERING

METROPOLITAN COUNCIL
SOUTHWEST Green Line LRT Extension

WEST - VOLUME 1 (CIVIL) - SEGMENT 2
CITY WEST STATION
PARK & RIDE
SITE LIGHTING PLAN 2 OF 2

DISCIPLINE: ELECTRICAL
SHEET NAME: W2-ELE-PRK-003

SHEET 91 OF 107

Aug. 27 2014 04:17 pm V:\3200_PEC-W\CAD\SEGMENT-W2\SHEET\ELECTRICAL\W2-ELE-PRK-001.dwg By: Boscha

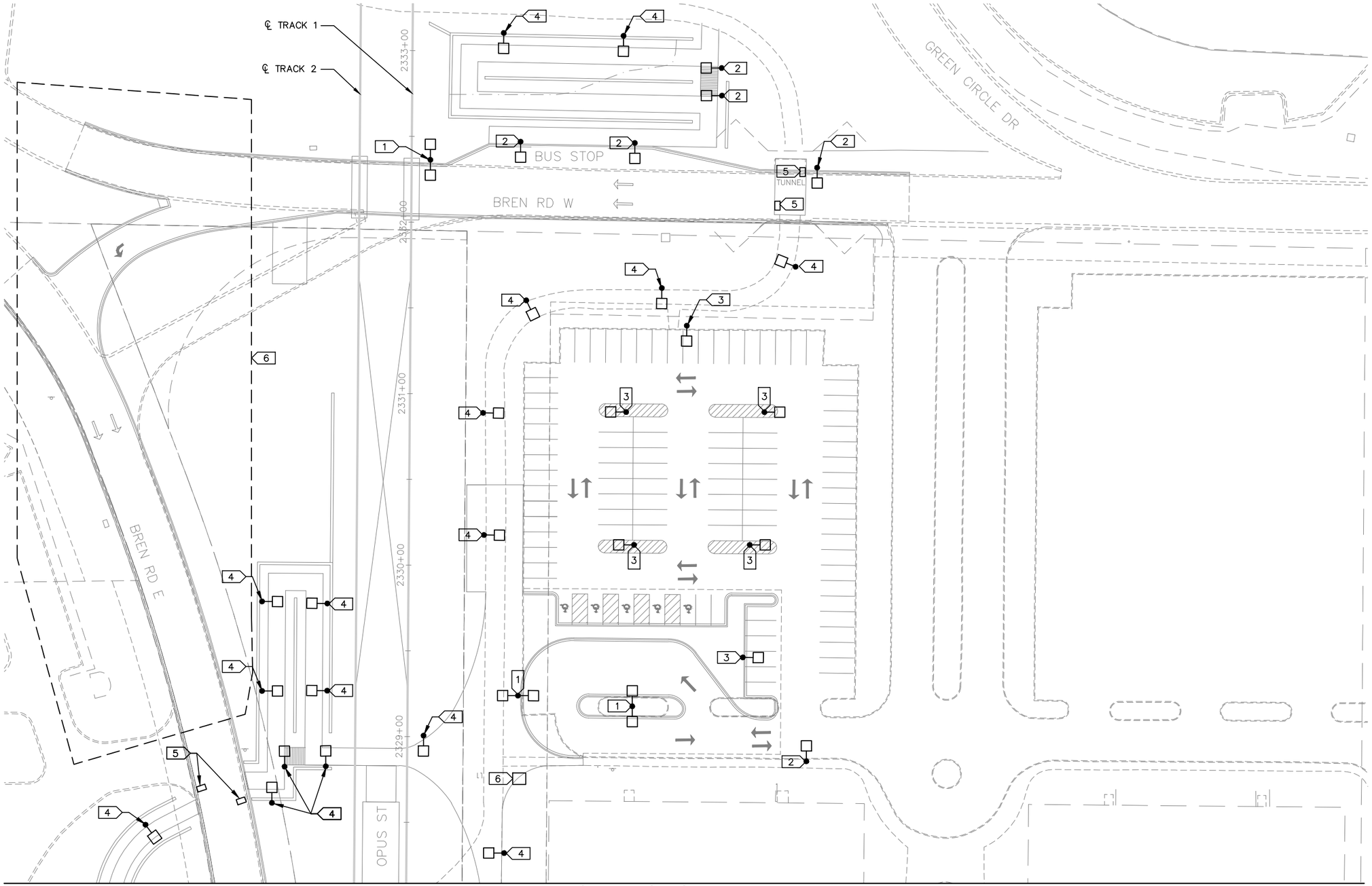

KEYNOTES:

1. DOUBLE POLE MOUNTED LUMINAIRE. LED, TYPE 5 DISTRIBUTION, COOL WHITE COLOR TEMPERATURE, 18,000 LUMENS, MOUNTED AT 30'.
2. SINGLE POLE MOUNTED LUMINAIRE. LED, TYPE 3 DISTRIBUTION, COOL WHITE COLOR TEMPERATURE, 18,000 LUMENS, MOUNTED AT 30'.
3. SINGLE POLE MOUNTED LUMINAIRE. LED, TYPE 4 DISTRIBUTION, COOL WHITE COLOR TEMPERATURE, 24,000 LUMENS, MOUNTED AT 30'.
4. SINGLE POLE MOUNTED LUMINAIRE. LED, TYPE 2 DISTRIBUTION, COOL WHITE COLOR TEMPERATURE, 6,000 LUMENS, MOUNTED AT 15'.
5. WALL MOUNTED LUMINAIRE. LED, COOL WHITE COLOR TEMPERATURE, 2,100 LUMENS, MOUNTED AT 9'.
6. SALVAGE AND REINSTALL EXISTING LIGHTING.
7. ELECTRICAL EQUIPMENT.

MATCH LINE - SEE SHEET W2-ELE-PRK-005

0 15 30 60
SCALE HORIZONTAL IN FEET

NO.	DATE	BY	CHECK	DESIGN	REVISION / SUBMITTAL

AECOM
M-P CONSULTANTS
CONSULTING ENGINEERING
MINNEAPOLIS • MINNESOTA

PRELIMINARY ENGINEERING

METROPOLITAN COUNCIL
SOUTHWEST Green Line LRT Extension

WEST - VOLUME 1 (CIVIL) - SEGMENT 2
OPUS STATION
PARK & RIDE
SITE LIGHTING PLAN 1 OF 2

DISCIPLINE: ELECTRICAL
SHEET NAME: W2-ELE-PRK-004

KEYNOTES:

1. SINGLE POLE MOUNTED LUMINAIRE. LED, TYPE 2 DISTRIBUTION, COOL WHITE COLOR TEMPERATURE, 6,000 LUMENS, MOUNTED AT 15'.
2. SALVAGE AND REINSTALL EXISTING LIGHTING.

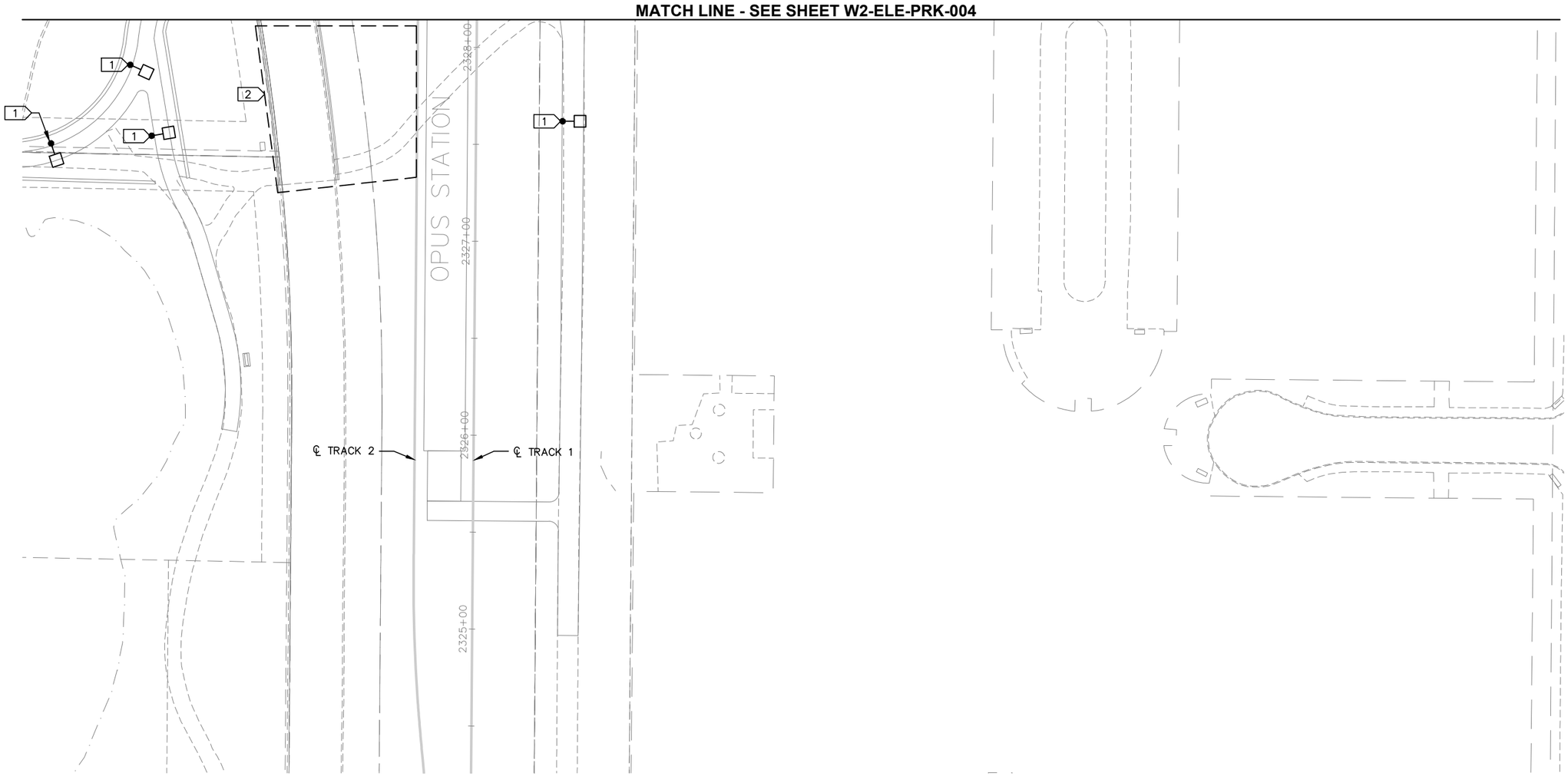

0 15 30 60
HORIZONTAL SCALE IN FEET

NO.	DATE	BY	CHECK	DESIGN	REVISION / SUBMITTAL

AECOM
M-P CONSULTANTS
CONSULTING ENGINEERING
MINNEAPOLIS • MINNESOTA

PRELIMINARY ENGINEERING

METROPOLITAN COUNCIL
SOUTHWEST Green Line LRT Extension

WEST - VOLUME 1 (CIVIL) - SEGMENT 2
OPUS STATION
PARK & RIDE
SITE LIGHTING PLAN 2 OF 2

DISCIPLINE: ELECTRICAL
SHEET NAME: W2-ELE-PRK-005

SHEET 93 OF 107

Jun, 26 2014 09:30 am V:\3200_pec-w\CAD\SEGMENT-W2\SHEET\ELECTRICAL\W2-ELE-PRK-001.dwg By: Adam

LEGEND

PROPOSED UTILITY LINE TYPES

- WATER MAIN
- SANITARY SEWER
- SANITARY SEWER FORCE MAIN
- COM-UG — COM-UG — FIBER OPTIC COMMUNICATION

PROPOSED UTILITY SYMBOLS

- WATER MANHOLE
- WATER VALVE
- WATER HYDRANT
- SANITARY SEWER MANHOLE

SANITARY AND WATER PLAN CONSTRUCTION NOTES

1. CONNECT TO EXISTING WATER MAIN. VERIFY EXISTING WATER MAIN SIZE AND LOCATION. PROVIDE FITTINGS, PIPE COUPLING (ISOLATING COUPLING WHERE REQUIRED–SEE CORROSION CONTROL PLANS) AND MECHANICAL THRUST RESTRAINT AT THE FITTINGS, COUPLING AND ACROSS COUPLING.
2. 8" GATE VALVE AND VALVE BOX.
3. 6" GATE VALVE, VALVE BOX, HYDRANT AND DIP LEAD.
4. COORDINATE WITH CITY FOR SERVICE CONNECTIONS.
5. 6" GATE VALVE, VALVE MANHOLE, HYDRANT AND DIP LEAD
6. CONSTRUCT MANHOLE OVER EXISTING SEWER.
7. RECONSTRUCT MANHOLE AS NECESSARY TO MATCH PROPOSED GRADE.
8. CONSTRUCT WATER SERVICE. SEE TABULATION OF WATER SERVICES IN THE EXISTING UTILITY TABULATIONS FOR PROPOSED SIZE AND MATERIAL. PROVIDE ADAPTORS AND FITTINGS AS NECESSARY TO MAKE CONNECTION TO EXISTING SERVICE. REFER TO CORROSION CONTROL PLANS FOR CORROSION CONTROL NOTES. CONTRACTOR SHALL TAP MAIN FOR ALL SERVICES. VERIFY EXISTING WATER SERVICE SIZE AND LOCATION.
9. CONNECT TO EXISTING WATER SERVICE. VERIFY EXISTING WATER SERVICE SIZE AND LOCATION. PROVIDE FITTINGS, PIPE COUPLING (ISOLATING COUPLING WHERE REQUIRED–SEE CORROSION CONTROL PLANS) AND MECHANICAL THRUST RESTRAINT AT THE FITTINGS, COUPLING AND ACROSS COUPLING. CONSTRUCT WATER SERVICES 4" AND LARGER WITH MECHANICAL JOINT DIP. PROVIDE MECHANICAL THRUST RESTRAINT FOR ALL JOINTS. INSTALL WITH A CAP AND OUTLET AT THE END OF THE SERVICE OF SUFFICIENT SIZE TO ALLOW FOR FLUSHING AND TESTING OF THE SERVICE LINE. ALL SERVICES WILL BE SUBJECT TO THE SAME TESTING AS THE WATER MAIN. AFTER SUCCESSFUL COMPLETION OF TESTING, REMOVE CAP AND CONNECT TO EXISTING SERVICE PIPE. CONNECTION TO EXISTING PIPE WILL BE VISUALLY INSPECTED UNDER CITY OPERATING PRESSURE PRIOR TO BURYING. COORDINATE TESTING AND INSPECTION WITH CAR (COUNCIL AUTHORIZED REPRESENTATIVE) AND CITY INSPECTOR.
10. SEE TYPICAL PIPE CASING INSTALLATION DETAIL.
11. PROTECT SEWER IN PLACE.
12. STATION WATER SERVICE. SEE STATION MECHANICAL PLANS FOR CONTINUATION AND DETAIL. COORDINATE WITH CAR (COUNCIL AUTHORIZED REPRESENTATIVE) FOR LOCATION OF CURB STOP.
13. PROVIDE AND INSTALL MECHANICAL THRUST RESTRAINT FOR ALL JOINTS.
14. CONCRETE PIERS FOR PIPE CROSSING. SEE DETAIL.
15. INSULATE WATER MAIN.
16. SEWER CONSTRUCTION JOINT. SEE DETAIL.
17. SEE JOINING DISSIMILAR PIPE DETAIL.
18. CONSTRUCT WATER SERVICE TRACK CROSSING PER TYPICAL WATER SERVICE TRACK CROSSING FOR 2" COPPER SERVICE OR SMALLER DETAIL.
19. NOT USED
20. RECONSTRUCT SEWER SERVICE PER RECONNECTION OF HOUSE SERVICES DETAIL. COORDINATE WITH PROPERTY OWNER TO MINIMIZE INTERRUPTION OF SERVICE. COORDINATE WITH LOCATION AND ELEVATION OF PUBLIC AND PRIVATE UTILITIES AND PROPOSED RELOCATION OF PUBLIC AND PRIVATE UTILITIES.
21. NOT USED

NO.	DATE	BY	CHECK	DESIGN	REVISION / SUBMITTAL
.	.	.	.	.	.
.	.	.	.	.	.
.	.	.	.	.	.
.	.	.	.	.	.
.	.	.	.	.	.
.	.	.	.	.	.
.	.	.	.	.	.
.	.	.	.	.	.

AECOM pce

PRELIMINARY ENGINEERING

METROPOLITAN COUNCIL

SOUTHWEST Green Line LRT Extension

WEST-VOLUME 1 (CIVIL)-SEGMENT 2
UTILITY
NOTES AND LEGEND

DISCIPLINE: UTILITY

SHEET NAME: W2-UTL-NTS-001

UTILITY CONTACTS

UTILITY: ARVIG COMMUNICATIONS SYSTEMS
CONTACT: PATRICK LYNCH
PHONE: (320) 256-0271
MOBILE: (320) 492-8763
ADDRESS: 224 MAIN STREET EAST
MELROSE, MINNESOTA 56352

UTILITY: AT & T
CONTACT: JERRY STREETER
PHONE: (612) 344-3327
MOBILE: (612) 248-8674
ADDRESS: 420 3RD AVE. S., 9TH FLOOR
MINNEAPOLIS, MINNESOTA 55415

UTILITY: CENTERPOINT ENERGY
CONTACT: ANDREW BALGOBIN
PHONE: (612) 321-5426
MOBILE:
ADDRESS: 700 WEST LINDEN AVENUE
MINNEAPOLIS, MINNESOTA 55403

UTILITY: CENTURYLINK
CONTACT: BRANDON ELVERUM
PHONE: (651) 250-3996
MOBILE:
ADDRESS: 390 COMMERCE DRIVE, ROOM #104
WOODBURY, MINNSOTA 55125

UTILITY: CENTURYLINK
CONTACT: KATHY HOGGARTH
PHONE: (651) 312-5306
MOBILE:
ADDRESS: 425 MONROE ST.
ANOKA, MINNESOTA 55303

UTILITY: CENTURYLINK - LITECORE/KMC
CONTACT: KYLE TOSTENSON
PHONE: (318) 417-2768
MOBILE:
ADDRESS: 100 CENTURYLINK DRIVE
MONROE, LA 71203

UTILITY: CITY OF EDEN PRAIRIE
CONTACT: ROBERT ELLIS
PHONE: (952) 949-8310
MOBILE:
ADDRESS: CITY CENTER
8080 MITCHELL ROAD
EDEN PRAIRIE, MINNESOTA 55344

UTILITY: CITY OF HOPKINS
CONTACT: NATE STANLEY
PHONE: (952) 548-6356
MOBILE: (952) 292-6872
ADDRESS: 1010 1ST ST. S.
HOPKINS, MINNESOTA 55343

UTILITY: CITY OF MINNETONKA
CONTACT: WILL MANCHESTER
PHONE: (952) 939-8232
MOBILE:
ADDRESS: MINNETONKA CITY HALL
14600 MINNETONKA BLVD.
MINNETONKA, MINNESOTA 55345

UTILITY: COMCAST CABLE
CONTACT: TOM NIEDZIELSKI
PHONE: (651) 493-5407
MOBILE: (612) 490-7750
ADDRESS: 2621 FAIRVIEW AVE. NORTH
ROSEVILLE, MINNESOTA 55113

UTILITY: ENVENTIS
CONTACT: JONI MCGABE
PHONE: (507) 387-1770
MOBILE: (507) 317-1411
ADDRESS: 2730 3RD AVENUE
PO BOX 3288
MANKATO, MN 56002-3288

UTILITY: HENNEPIN COUNTY
CONTACT: KRISTY MORTER
PHONE: (612) 596-0384
MOBILE:
ADDRESS: HENNEPIN COUNTY
TRANSPORTATION DEPARTMENT, DESIGN DIVISION
1600 PRAIRIE DRIVE
MEDINA, MN 55340

UTILITY: HOPKINS PUBLIC SCHOOLS
CONTACT: JOHN WETTER
PHONE: (952) 988-5373
MOBILE:
ADDRESS: EDUCATIONAL TECHNOLOGY, MEDIA & INFORMATION SERVICES
HOPKINS DISTRICT 270
1001 HIGHWAY 7
HOPKINS, MINNESOTA 55305

UTILITY: METROPOLITAN COUNCIL, ENVIRONMENTAL SERVICES
CONTACT: ADAM GORDON
PHONE: (651) 602-4508
MOBILE:
ADDRESS: 3565 KENNEBEC DRIVE
EAGAN, MINNESOTA 55122

UTILITY: METRO TRANSIT
CONTACT: BOJAN MISIC
PHONE: (612) 373-3874
MOBILE: (619) 549-7620
ADDRESS: SOUTHWEST LRT PROJECT OFFICE
PARK PLACE WEST
6465 WAYZATA BOULEVARD, SUITE 500
ST. LOUIS PARK, MN 55426

UTILITY: MNDOT
CONTACT: MIKE MANNING
PHONE: (612) 373-3809
MOBILE: (651) 775-0227
ADDRESS: SOUTHWEST LRT PROJECT OFFICE
PARK PLACE WEST
6465 WAYZATA BOULEVARD, SUITE 500
ST. LOUIS PARK, MN 55426

UTILITY: SBA COMMUNICATIONS CORPORATION
CONTACT: SUSAN HART
PHONE: (919) 803-3427 X 105
MOBILE: (919) 625-2286
ADDRESS: SBA COMMUNICATIONS CORPORATION
5640 DILLARD DRIVE
SUITE 101
CARY, NC 27518

UTILITY: SPRINT COMMUNICATIONS COMPANY, LP
CONTACT: DAN HILLIARD
PHONE: (651) 772-6714
MOBILE: (612) 414-2089
ADDRESS: 849 EARL STREET
ST. PAUL, MINNESOTA 55106

UTILITY: TDS TELECOM
CONTACT: MICHAEL RITCHIE
PHONE: (608) 664-4461
MOBILE:
ADDRESS: 525 JUNCTION ROAD
MADISON, WISCONSIN 53717

UTILITY: TELECOM TRANSPORT MANAGEMENT, INC.
CONTACT: DAVE SMITH
PHONE: (612) 309-8422
MOBILE:
ADDRESS: 6844 WASHINGTON AVE.
EDEN PRAIRIE, MN 55344

UTILITY: TW TELECOM, INCORPORATED
CONTACT: BOB STRONG
PHONE: (952) 351-2353
MOBILE: (612) 805-6827
ADDRESS: 5480 FELTL ROAD
MINNETONKA, MINNESOTA 55343-7982

UTILITY: VERIZON COMMUNICATIONS
CONTACT: STEPHEN BONCZKOWSKI
PHONE: (630) 395-6161
MOBILE: (630) 327-6959
ADDRESS: 501 63RD ST.
DOWNERS GROVE, ILLINOIS 60516

UTILITY: WINDSTREAM
CONTACT: ERIC BECKER
PHONE:
MOBILE: (612) 790-4110
ADDRESS: 2996 CENTRE POINT DR.
ROSEVILLE, MINNESOTA 55113

UTILITY: XCEL ENERGY - TRANSMISSION
CONTACT: BRUCE ZEMKE
PHONE: (612) 330-7815
MOBILE: (651) 214-2620
ADDRESS: 414 NICOLLET MALL, (MP 8)
MINNEAPOLIS, MINNESOTA 55401

UTILITY: XCEL ENERGY - DISTRIBUTION
CONTACT: MORGAN IMPOLA
PHONE: (952) 829-4538
MOBILE: (612) 876-5447
ADDRESS: 5309 WEST 70TH STREET
EDINA, MINNESOTA 55439

UTILITY: XO COMMUNICATIONS
CONTACT: ED PARKER
PHONE: (602) 324-6488
MOBILE:
ADDRESS: 3930 E. WATKINS SUITE 200
PHOENIX, ARIZONA 85034

UTILITY: ZAYO FIBER SOLUTIONS
CONTACT: JACK JELINEK
PHONE: (952) 230-4288
MOBILE: (715) 245-0491
ADDRESS: 2300 BERKSHIRE LN N.
SUITE 4
PLYMOUTH, MN 55441

NO.	DATE	BY	CHECK	DESIGN	REVISION / SUBMITTAL

AECOM pce

PRELIMINARY ENGINEERING

METROPOLITAN COUNCIL

SOUTHWEST Green Line LRT Extension

WEST-VOLUME 1 (CIVIL)-SEGMENT 2
UTILITY
CONTACTS

DISCIPLINE: UTILITY

SHEET NAME: W2-UTL-CNTC-001

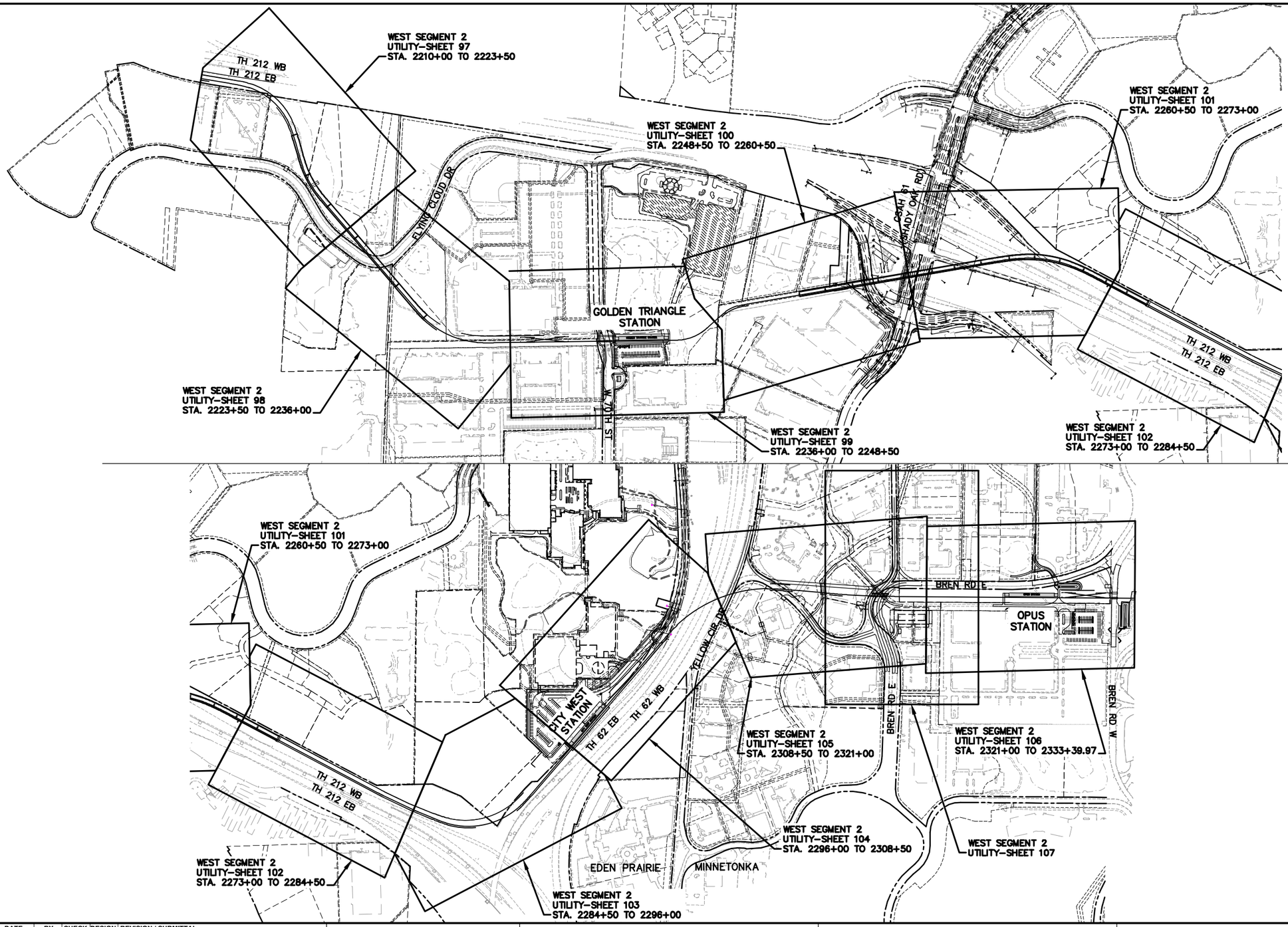

NO.	DATE	BY	CHECK	DESIGN	REVISION / SUBMITTAL
.	.	.	.	.	.
.	.	.	.	.	.
.	.	.	.	.	.
.	.	.	.	.	.
.	.	.	.	.	.
.	.	.	.	.	.
.	.	.	.	.	.
.	.	.	.	.	.

AECOM pce

PRELIMINARY ENGINEERING

METROPOLITAN COUNCIL

SOUTHWEST Green Line LRT Extension

WEST-VOLUME 1 (CIVIL)-SEGMENT 2
UTILITY
SHEET INDEX

DISCIPLINE: UTILITY

SHEET NAME: W2-UTL-IDX-001

SHEET 96 OF 107

Jun, 27 2014 08:10 am V:\3200_PEC-W\CAD\SEGMENT-W2\SHEET\UTILITIES\W2-UTL-IDX.dwg By: Depuydrd

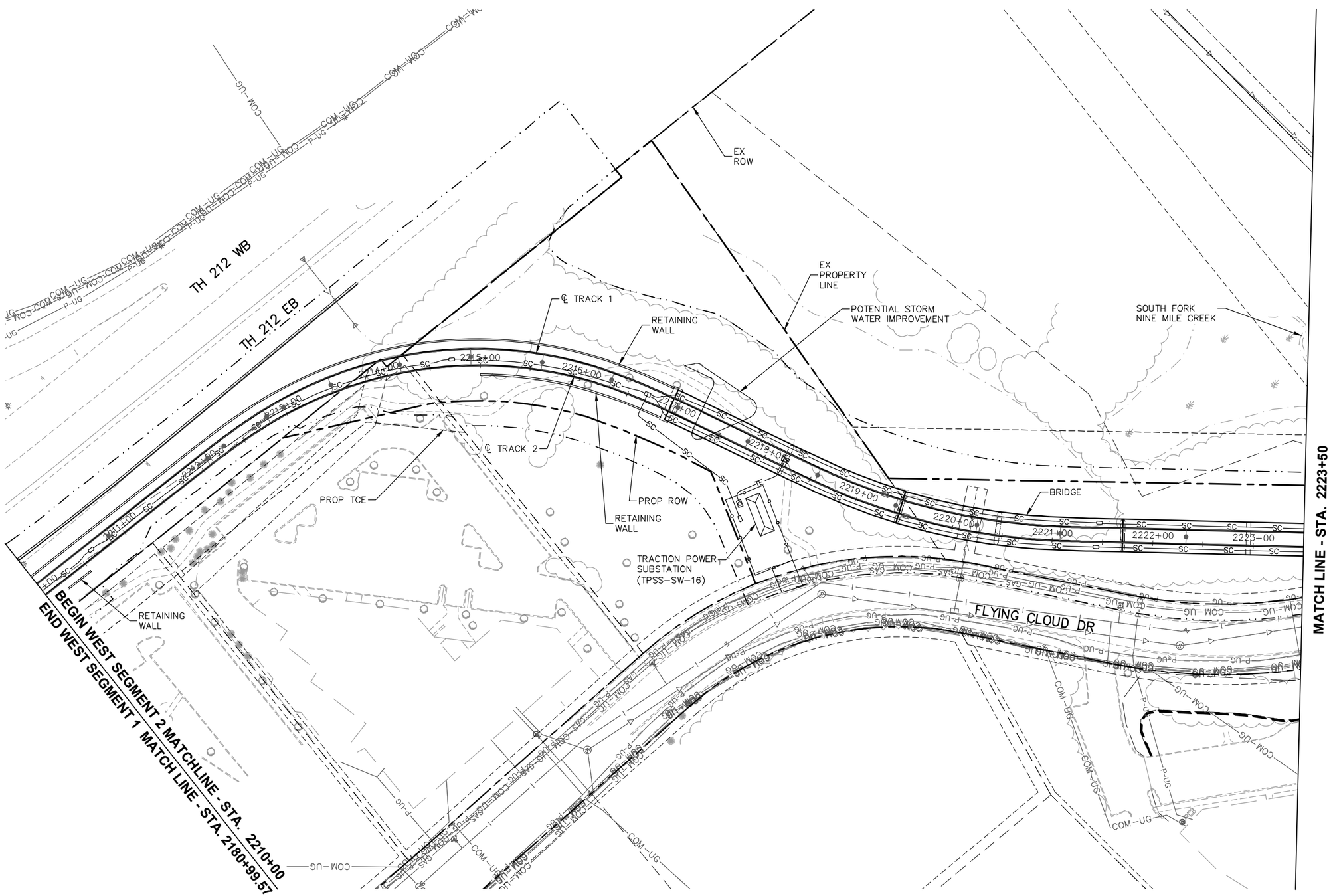

0 25 50 100
HORIZONTAL
SCALE IN FEET

NOTES:

* SEE SHEET W2-UTL-NTS-001 FOR UTILITY LEGEND.
* (XX)=SANITARY AND WATER PLAN CONSTRUCTION NOTE. REFER TO SHEET W2-UTL-NTS-001 FOR NOTES.

NO.	DATE	BY	CHECK	DESIGN	REVISION / SUBMITTAL

AECOM pce

PRELIMINARY ENGINEERING

METROPOLITAN COUNCIL

SOUTHWEST Green Line LRT Extension

WEST-VOLUME 1 (CIVIL)-SEGMENT 2
UTILITY
PLAN
STA. 2210+00 TO STA. 2223+50

DISCIPLINE: UTILITY

SHEET NAME: W2-UTL-PLN-001

SHEET 97 OF 107

Aug. 27 2014 07:58 am V:\3200_PEC-W\CAD\SEGMENT-W2\SHEET\UTILITIES\W2-UTL-PLN.dwg By: lnewman

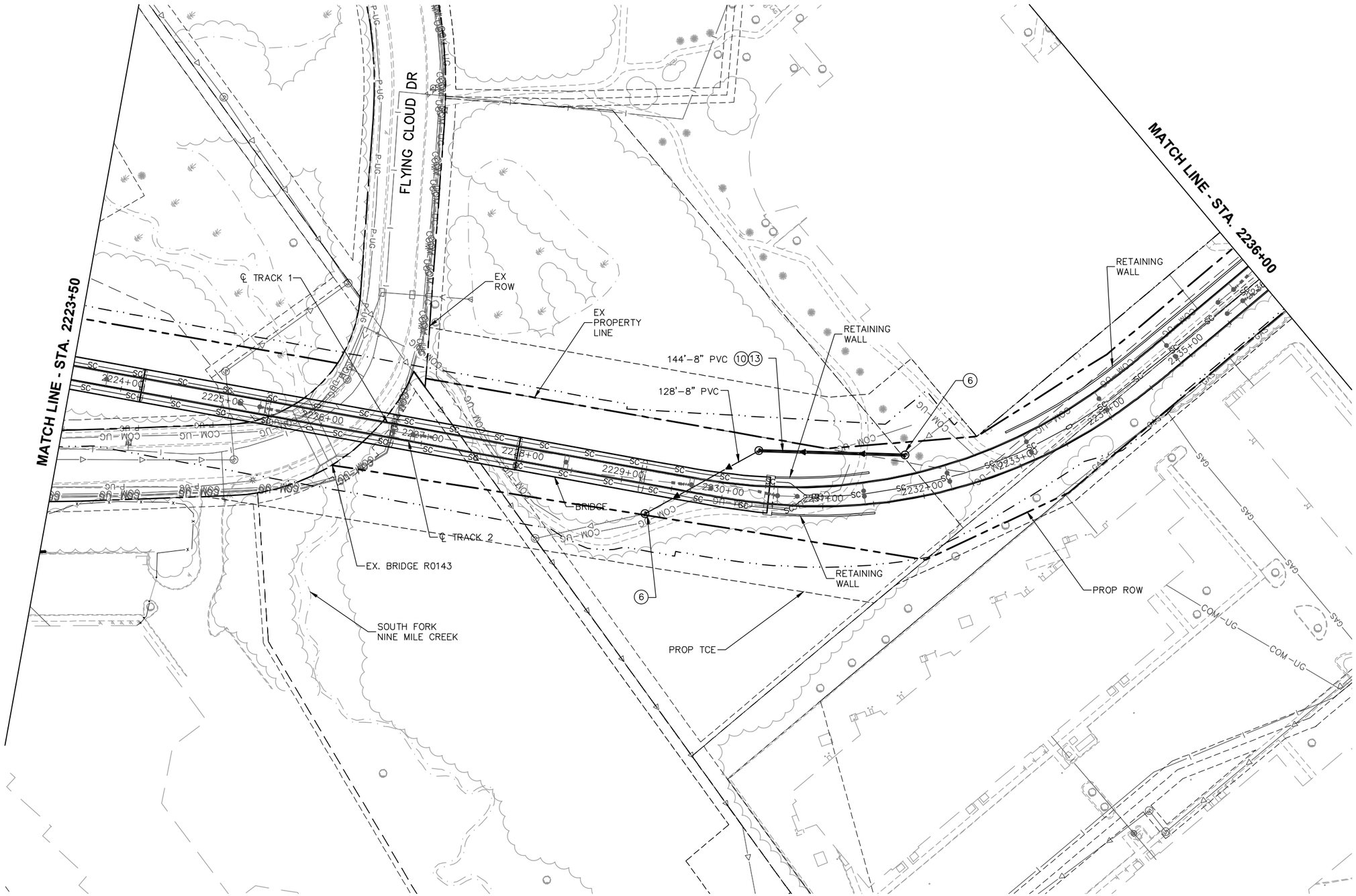

0 25 50 100
HORIZONTAL
SCALE IN FEET

NOTES:

* SEE SHEET W2-UTL-NTS-001 FOR UTILITY LEGEND.
* (XX)=SANITARY AND WATER PLAN CONSTRUCTION NOTE. REFER TO SHEET W2-UTL-NTS-001 FOR NOTES.

NO.	DATE	BY	CHECK	DESIGN	REVISION / SUBMITTAL

AECOM pce

PRELIMINARY ENGINEERING

METROPOLITAN COUNCIL

SOUTHWEST Green Line LRT Extension

WEST-VOLUME 1 (CIVIL)-SEGMENT 2
UTILITY
PLAN
STA. 2223+50 TO STA. 2236+00

DISCIPLINE: UTILITY

SHEET NAME: W2-UTL-PLN-002

SHEET 98 OF 107

Jun, 27 2014 08:13 am V:\3200_PEC-W\CAD\SEGMENT-W2\SHEET\UTILITIES\W2-UTL-PLN.dwg By: Depuydrd

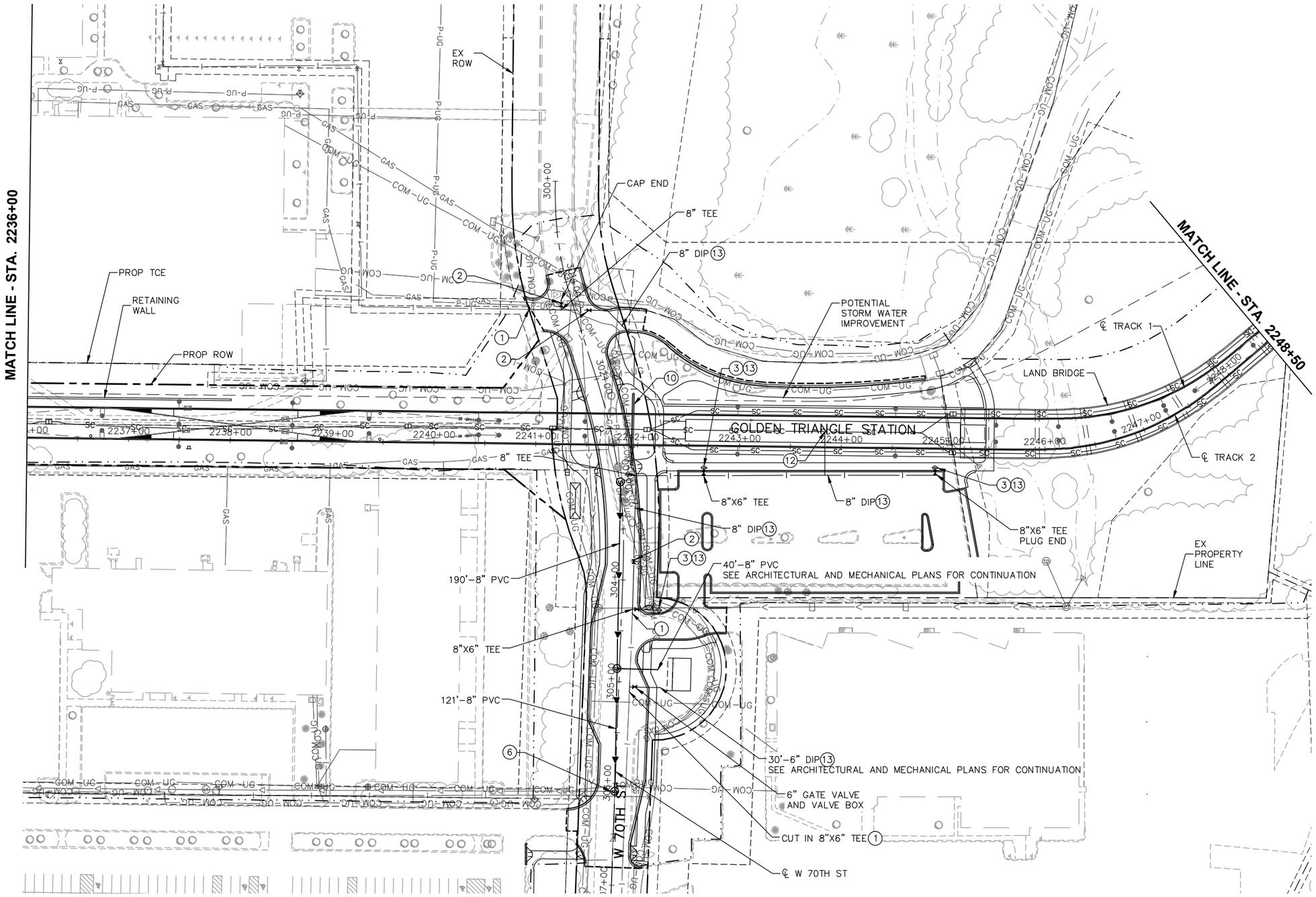

NOTES:

* SEE SHEET W2-UTL-NTS-001 FOR UTILITY LEGEND.
* (XX)=SANITARY AND WATER PLAN CONSTRUCTION NOTE. REFER TO SHEET W2-UTL-NTS-001 FOR NOTES.

NO.	DATE	BY	CHECK	DESIGN	REVISION / SUBMITTAL

AECOM pce

PRELIMINARY ENGINEERING

METROPOLITAN COUNCIL

SOUTHWEST Green Line LRT Extension

WEST-VOLUME 1 (CIVIL)-SEGMENT 2
UTILITY
PLAN
STA. 2236+00 TO STA. 2248+50

DISCIPLINE: UTILITY

SHEET NAME: W2-UTL-PLN-003

SHEET 99 OF 107

Aug. 27 2014 07:59 am V:\3200_PEC-W\CAD\SEGMENT-W2\SHEET\UTILITIES\W2-UTL-PLN.dwg By: inewman

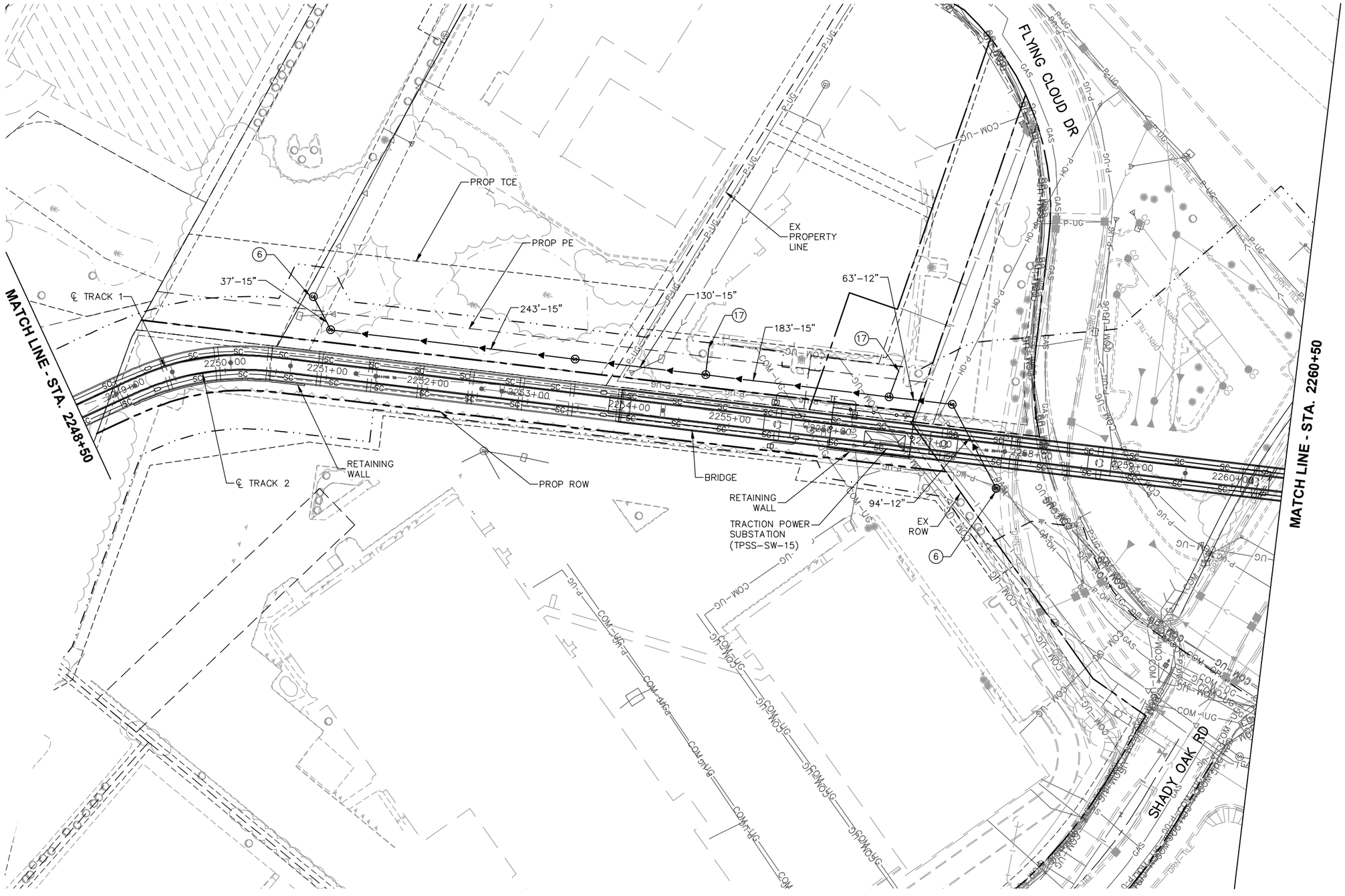

0 25 50 100
SCALE HORIZONTAL IN FEET

NOTES:

* SEE SHEET W2-UTL-NTS-001 FOR UTILITY LEGEND.
* (XX)=SANITARY AND WATER PLAN CONSTRUCTION NOTE. REFER TO SHEET W2-UTL-NTS-001 FOR NOTES.

NO.	DATE	BY	CHECK	DESIGN	REVISION / SUBMITTAL

AECOM pce

PRELIMINARY ENGINEERING

METROPOLITAN COUNCIL

SOUTHWEST Green Line LRT Extension

WEST-VOLUME 1 (CIVIL)-SEGMENT 2
UTILITY
PLAN
STA. 2248+50 TO STA. 2260+50

DISCIPLINE: UTILITY

SHEET NAME: W2-UTL-PLN-004

SHEET 100 OF 107

Aug, 27 2014 07:59 am V:\3200_PEC-W\CAD\SEGMENT-W2\SHEET\UTILITIES\W2-UTL-PLN.dwg By: lnewman

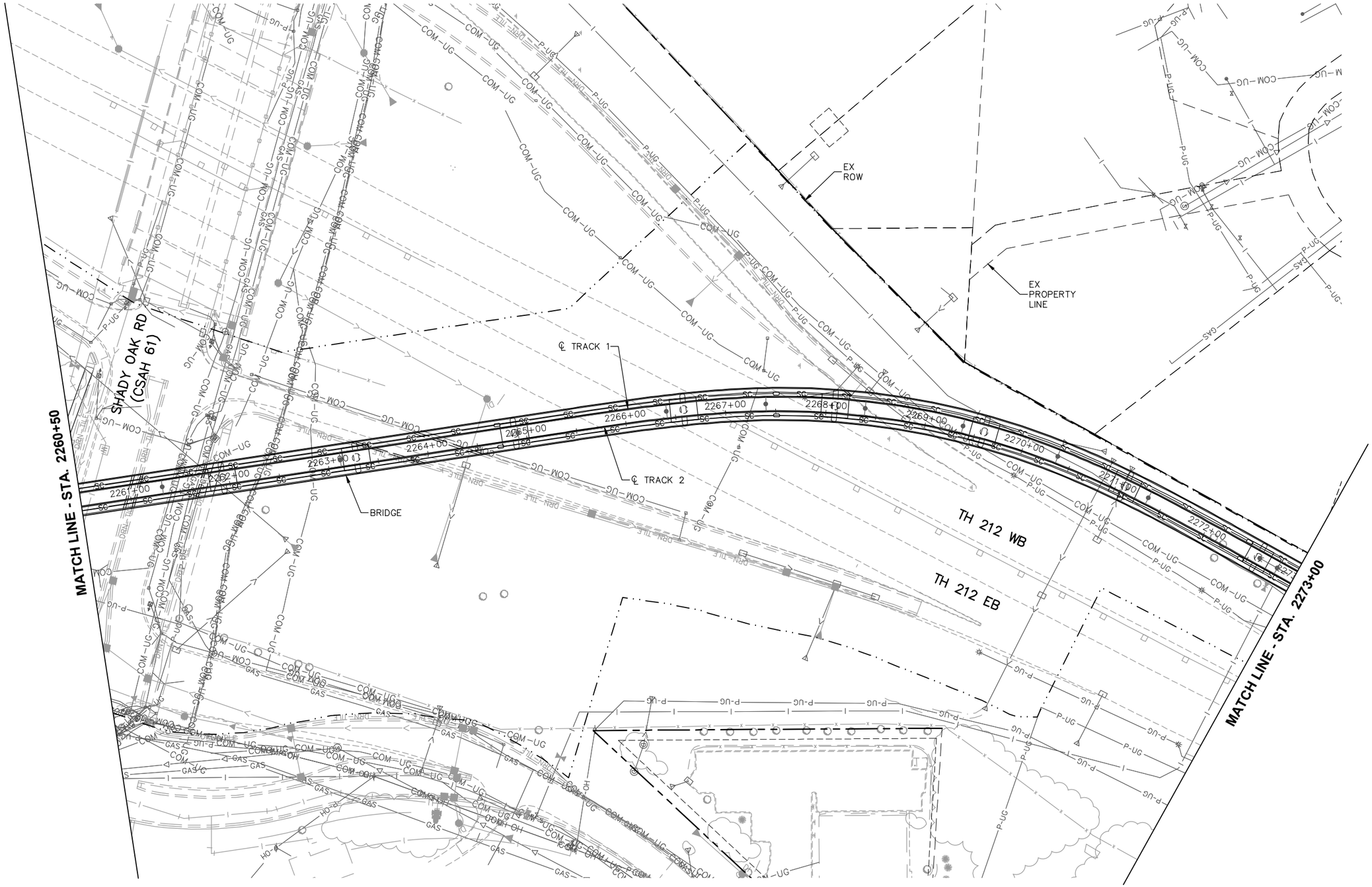

0 25 50 100
SCALE HORIZONTAL IN FEET

NOTES:

* SEE SHEET W2-UTL-NTS-001 FOR UTILITY LEGEND.
* (XX)=SANITARY AND WATER PLAN CONSTRUCTION NOTE. REFER TO SHEET W2-UTL-NTS-001 FOR NOTES.

NO.	DATE	BY	CHECK	DESIGN	REVISION / SUBMITTAL

AECOM pce

PRELIMINARY ENGINEERING

METROPOLITAN COUNCIL

SOUTHWEST Green Line LRT Extension

WEST-VOLUME 1 (CIVIL)-SEGMENT 2
UTILITY
PLAN
STA. 2260+50 TO STA. 2273+00

DISCIPLINE: UTILITY

SHEET NAME: W2-UTL-PLN-005

SHEET 101 OF 107

Jun, 27 2014 08:15 am V:\3200_PEC-W\CAD\SEGMENT-W2\SHEET\UTILITIES\W2-UTL-PLN.dwg By: Depuydrd

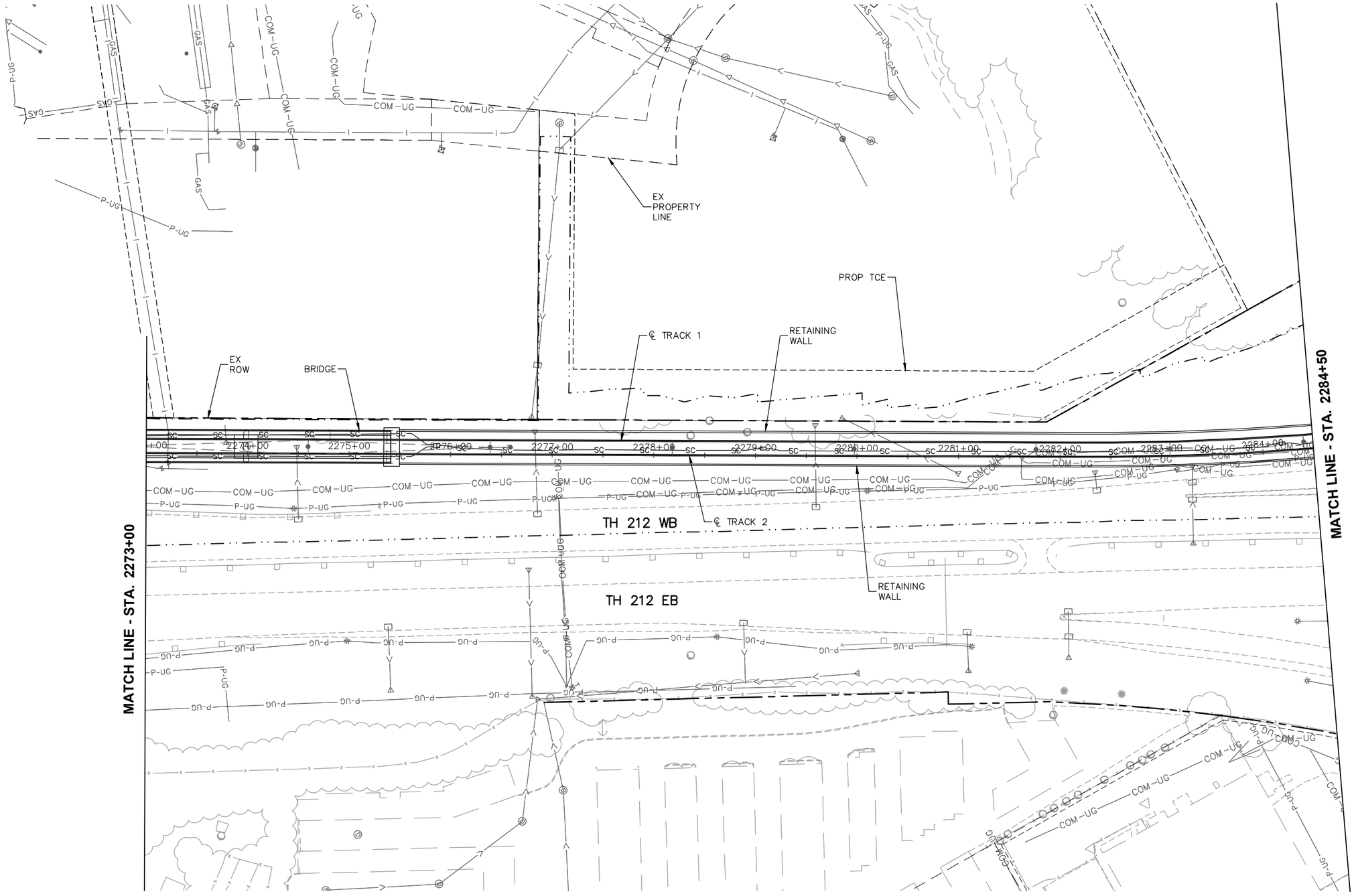

0 25 50 100
SCALE HORIZONTAL IN FEET

NOTES:

* SEE SHEET W2-UTL-NTS-001 FOR UTILITY LEGEND.
* (XX)=SANITARY AND WATER PLAN CONSTRUCTION NOTE. REFER TO SHEET W2-UTL-NTS-001 FOR NOTES.

NO.	DATE	BY	CHECK	DESIGN	REVISION / SUBMITTAL

AECOM pce

PRELIMINARY ENGINEERING

METROPOLITAN COUNCIL SOUTHWEST Green Line LRT Extension

WEST-VOLUME 1 (CIVIL)-SEGMENT 2
UTILITY
PLAN
STA. 2273+00 TO STA. 2284+50

DISCIPLINE: UTILITY
SHEET NAME: W2-UTL-PLN-006

SHEET 102 OF 107

Jun, 27 2014 08:16 am V:\3200_PEC-W\CAD\SEGMENT-W2\SHEET\UTILITIES\W2-UTL-PLN.dwg By: Depuydrd

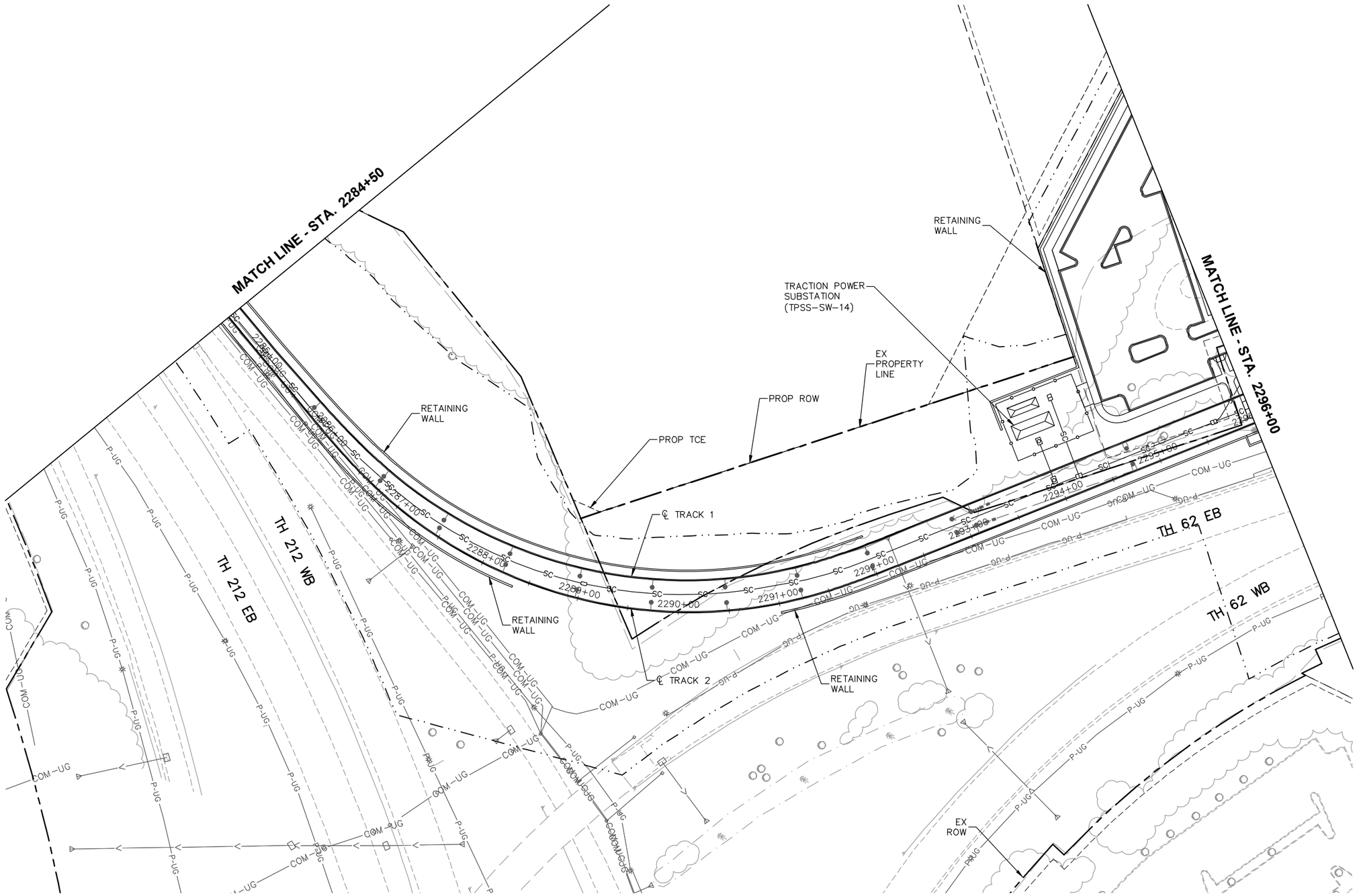

0 25 50 100
HORIZONTAL
SCALE IN FEET

NOTES:

* SEE SHEET W2-UTL-NTS-001 FOR UTILITY LEGEND.
* (XX)=SANITARY AND WATER PLAN CONSTRUCTION NOTE. REFER TO SHEET W2-UTL-NTS-001 FOR NOTES.

NO.	DATE	BY	CHECK	DESIGN	REVISION / SUBMITTAL

AECOM pce

PRELIMINARY ENGINEERING

METROPOLITAN COUNCIL

SOUTHWEST Green Line LRT Extension

WEST-VOLUME 1 (CIVIL)-SEGMENT 2
UTILITY
PLAN
STA. 2284+50 TO STA. 2296+00

DISCIPLINE: UTILITY

SHEET NAME: W2-UTL-PLN-007

SHEET 103 OF 107

Aug, 27 2014 08:00 am V:\3200_PEC-W\CAD\SEGMENT-W2\SHEET\UTILITIES\W2-UTL-PLN.dwg By: lnewman

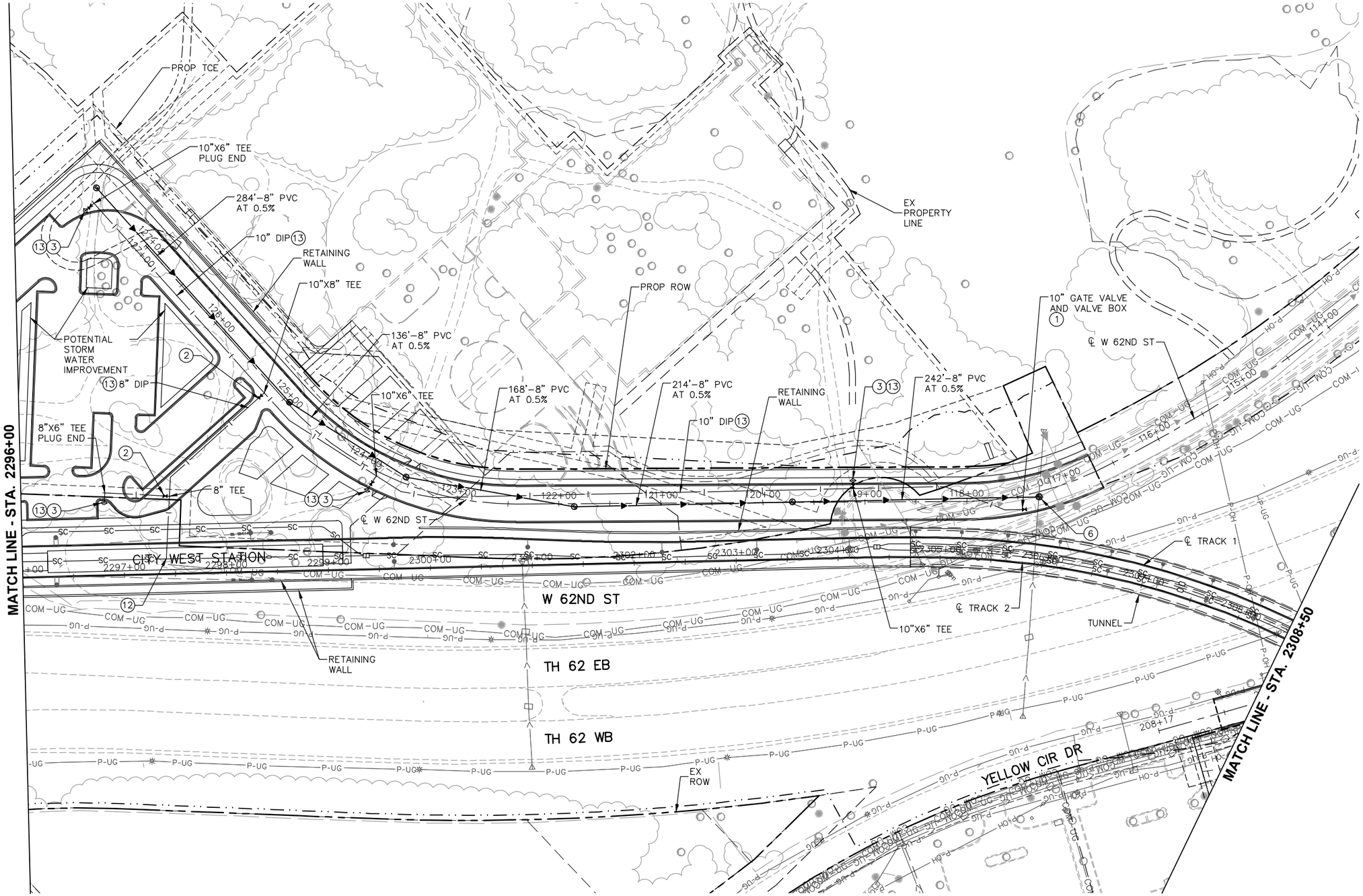

NOTES:

* SEE SHEET W2-UTL-NTS-001 FOR UTILITY LEGEND.
* (XX)=SANITARY AND WATER PLAN CONSTRUCTION NOTE. REFER TO SHEET W2-UTL-NTS-001 FOR NOTES.

NO.	DATE	BY	CHECK	DESIGN	REVISION / SUBMITTAL

AECOM pce

PRELIMINARY ENGINEERING

METROPOLITAN COUNCIL

SOUTHWEST Green Line LRT Extension

WEST-VOLUME 1 (CIVIL)-SEGMENT 2
UTILITY
PLAN
STA. 2296+00 TO STA. 2308+50

DISCIPLINE: UTILITY

SHEET NAME: W2-UTL-PLN-008

SHEET 104 OF 107

Aug. 27 2014 08:00 am V:\3200_PEC-W\CAD\SEGMENT-W2\SHEET\UTILITIES\W2-UTL-PLN.dwg By: inewman

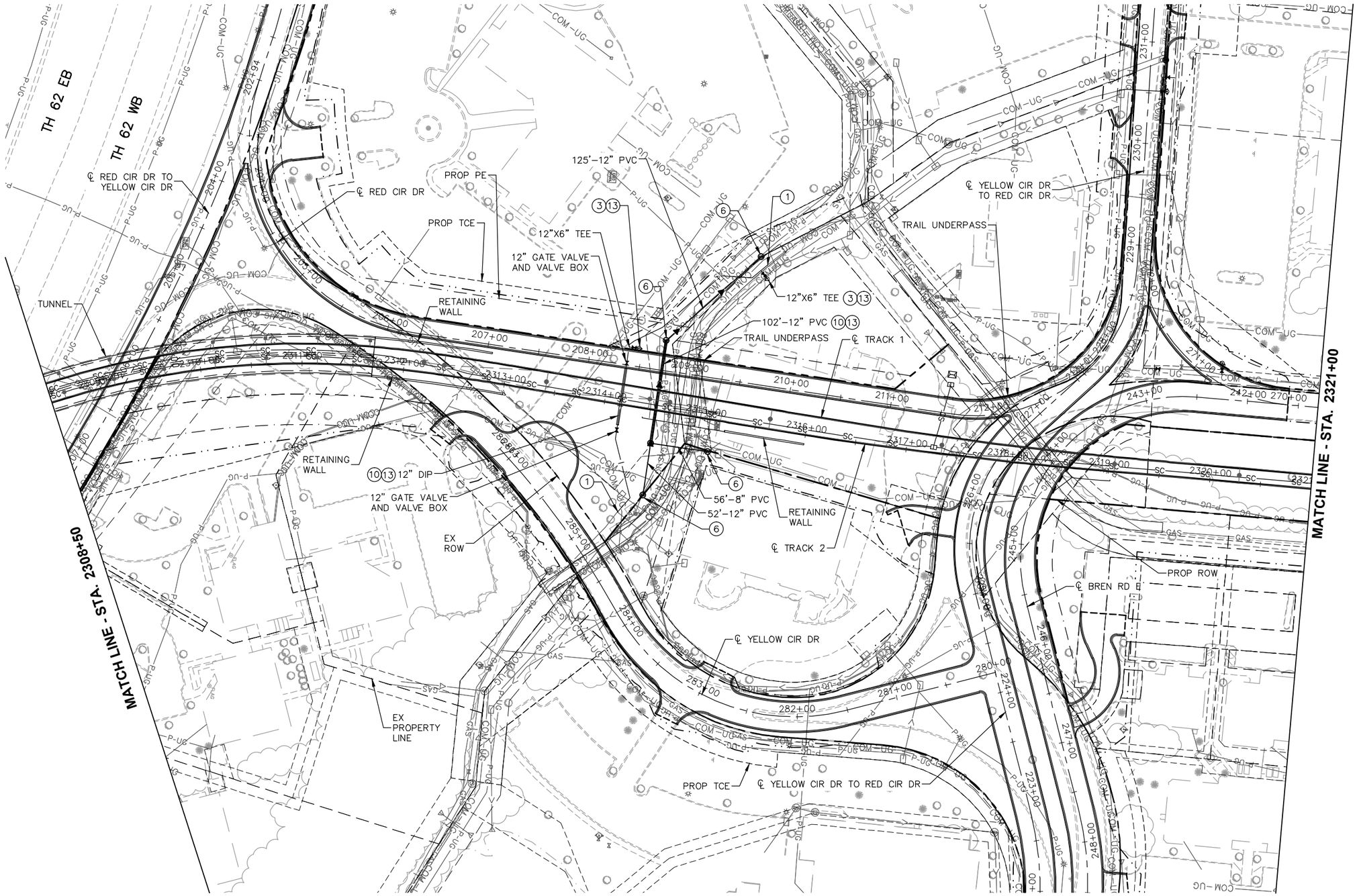

NOTES:

* SEE SHEET W2-UTL-NTS-001 FOR UTILITY LEGEND.
* (XX)=SANITARY AND WATER PLAN CONSTRUCTION NOTE. REFER TO SHEET W2-UTL-NTS-001 FOR NOTES.

NO.	DATE	BY	CHECK	DESIGN	REVISION / SUBMITTAL

AECOM pce

PRELIMINARY ENGINEERING

METROPOLITAN COUNCIL

SOUTHWEST Green Line LRT Extension

WEST-VOLUME 1 (CIVIL)-SEGMENT 2
UTILITY
PLAN
STA. 2308+50 TO STA. 2321+00

DISCIPLINE: UTILITY

SHEET NAME: W2-UTL-PLN-009

SHEET 105 OF 107

Jun, 27 2014 08:19 am V:\3200_PEC-W\CAD\SEGMENT-W2\SHEET\UTILITIES\W2-UTL-PLN.dwg By: Depuydrd

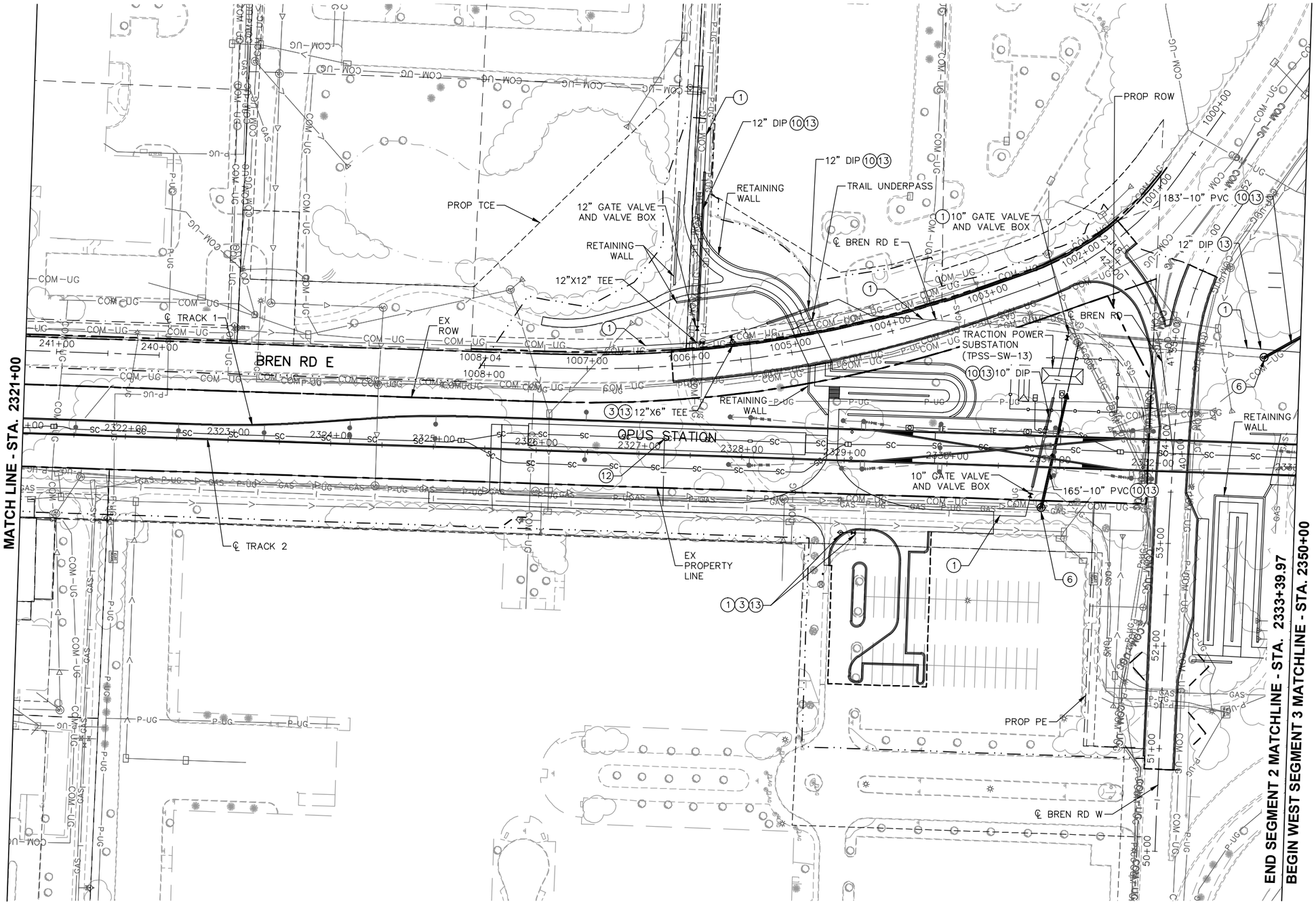

0 25 50 100
HORIZONTAL
SCALE IN FEET

NOTES:

* SEE SHEET W2-UTL-NTS-001 FOR UTILITY LEGEND.
* (XX)=SANITARY AND WATER PLAN CONSTRUCTION NOTE. REFER TO SHEET W2-UTL-NTS-001 FOR NOTES.

NO.	DATE	BY	CHECK	DESIGN	REVISION / SUBMITTAL

AECOM pce

PRELIMINARY ENGINEERING

METROPOLITAN COUNCIL

SOUTHWEST Green Line LRT Extension

WEST-VOLUME 1 (CIVIL)-SEGMENT 2
UTILITY
PLAN
STA. 2321+00 TO STA. 2333+39.97

DISCIPLINE: UTILITY

SHEET NAME: W2-UTL-PLN-010

SHEET 106 OF 107

Aug, 27 2014 02:07 pm V:\3200_PEC-W\CAD\SEGMENT-W2\SHEET\UTILITIES\W2-UTL-PLN.dwg By: lnewman

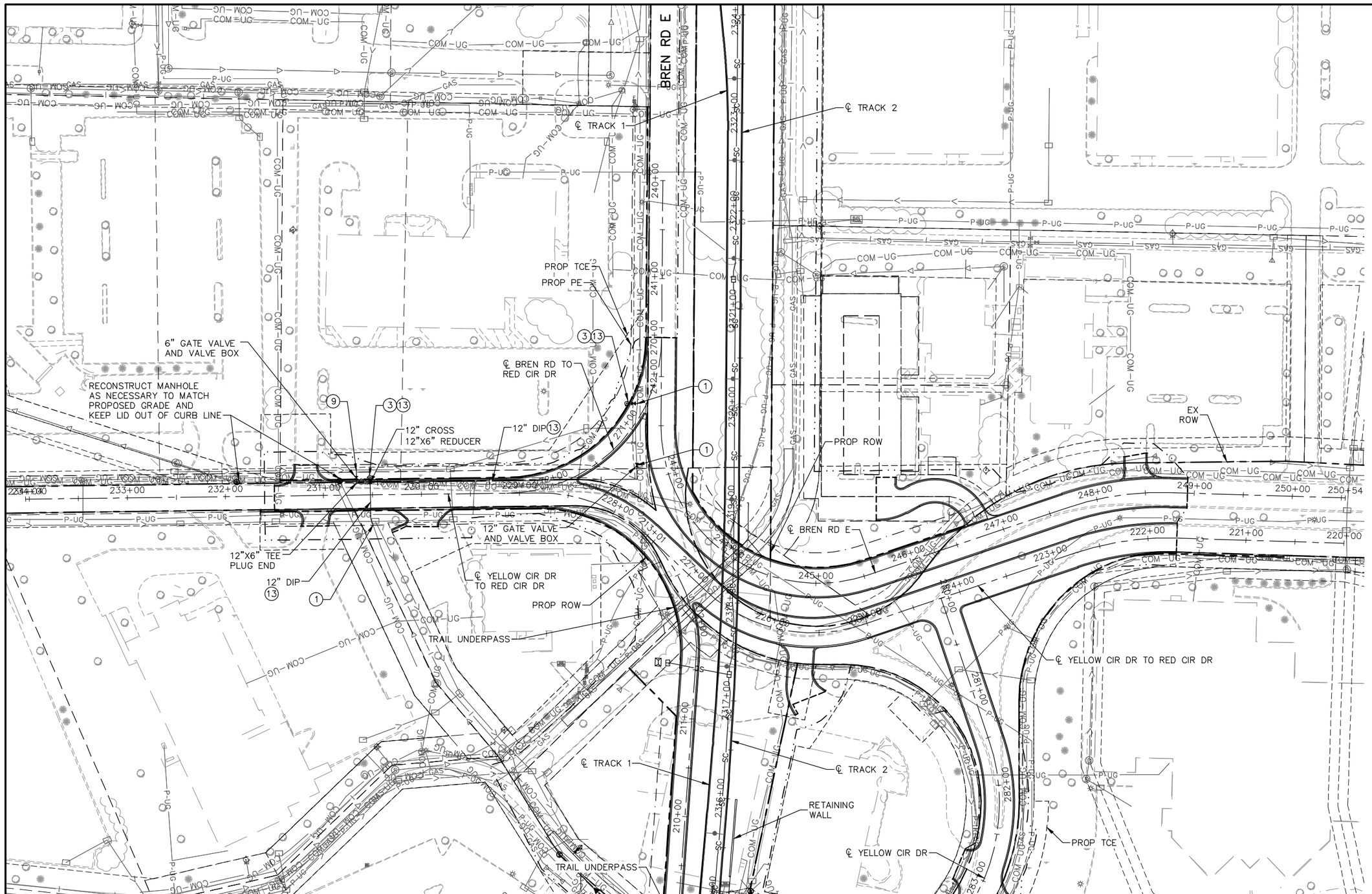

NOTES:

* SEE SHEET W2-UTL-NTS-001 FOR UTILITY LEGEND.
* (XX)=SANITARY AND WATER PLAN CONSTRUCTION NOTE. REFER TO SHEET W2-UTL-NTS-001 FOR NOTES.

NO.	DATE	BY	CHECK	DESIGN	REVISION / SUBMITTAL

AECOM pce

PRELIMINARY ENGINEERING

METROPOLITAN COUNCIL

SOUTHWEST Green Line LRT Extension

WEST-VOLUME 1 (CIVIL)-SEGMENT 2 UTILITY PLAN

DISCIPLINE: UTILITY

SHEET NAME: W2-UTL-PLN-011

SHEET 107 OF 107

Jun, 27 2014 08:21 am V:\3200_PEC-W\CAD\SEGMENT-W2\SHEET\UTILITIES\W2-UTL-PLN.dwg By: Depuydrd